NOTES:

1. UL CATEGORIES: UL985, UL1863
2. COATING: POWDER
3. STEEL GAUGE: 20
4. INSTRUCTION SHEET INCLUDED
5. CABLE GUARD INSERT INCLUDED

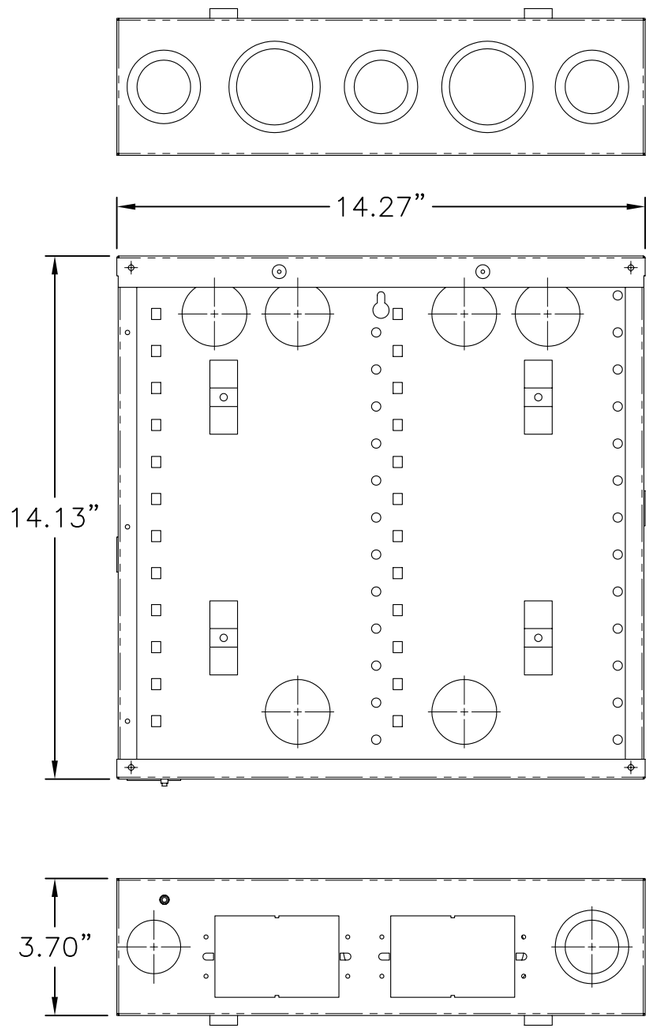

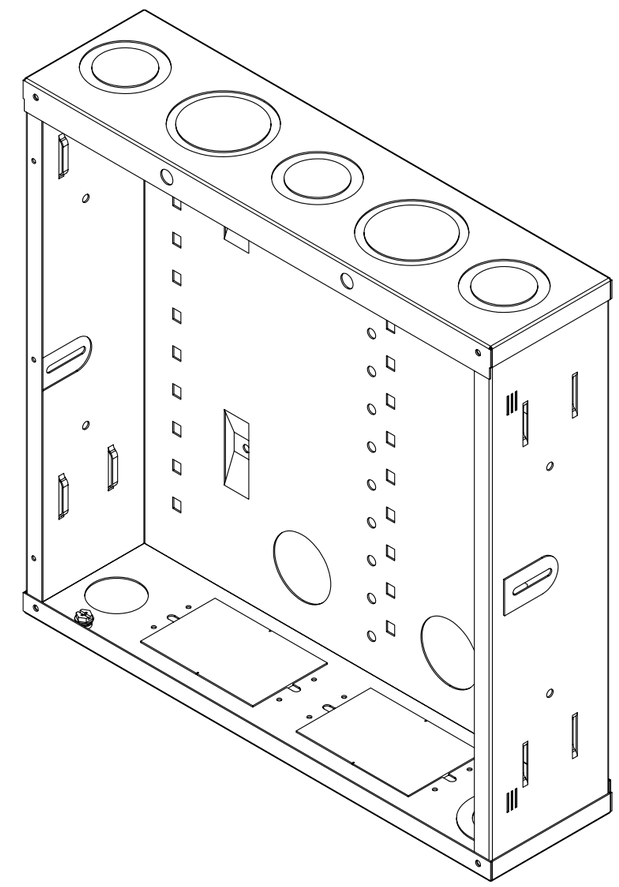

PROPRIETARY AND CONFIDENTIAL
THE INFORMATION CONTAINED
IN THIS DRAWING IS THE SOLE
PROPERTY OF On-Q/LEGRAND.
ANY REPRODUCTION IN PART OR
AS A WHOLE WITHOUT THE WRITTEN
PERMISSION OF On-Q/LEGRAND
IS PROHIBITED. DRAWING IS SUBJECT
TO CHANGE WITHOUT NOTICE.

on·Q
legrand
P.O. Box 60907
Harrisburg, PA 17106-0907
1-800-321-2343

TITLE: 14IN ENCLOSURE W/ KNOCK-OUTS NO COVER

SIZE	DWG NO	FILE NAME	CUST REV
B	EN1485	CD-EN1485	1

REVISED DATE	SCALE	SHEET
4/28/08	NONE	1 OF 1

ACAD

NOTES:

1. UL CATEGORIES: UL985, UL1863
2. COATING: POWDER
3. STEEL GAUGE: 20
4. INSTRUCTION SHEET INCLUDED
5. CABLE GUARD INSERT INCLUDED

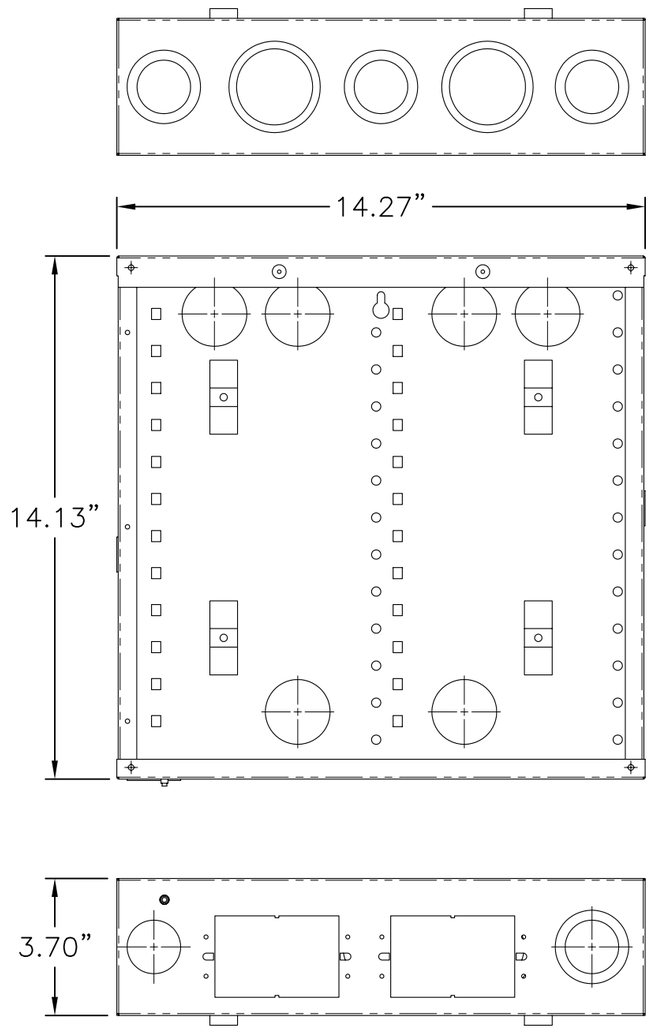

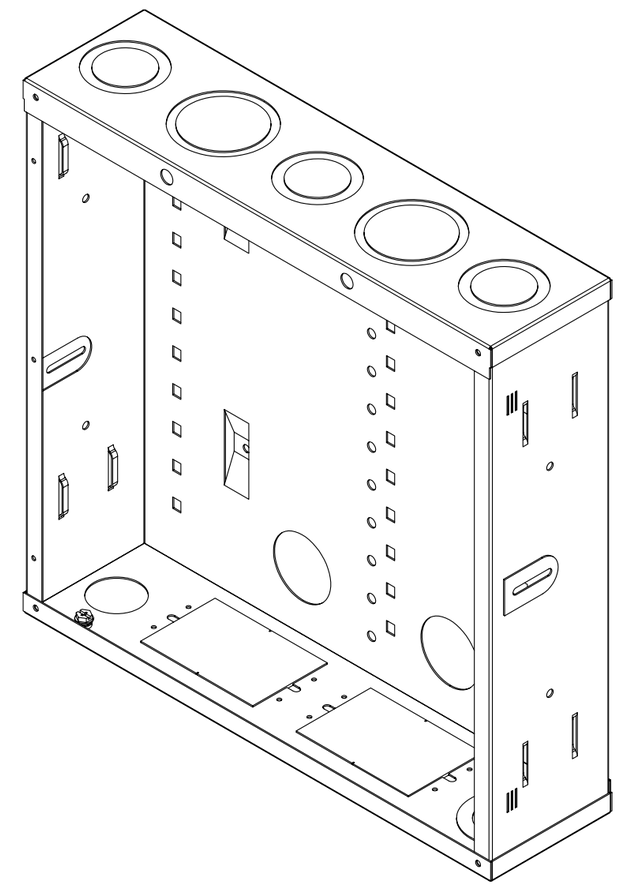

PROPRIETARY AND CONFIDENTIAL
THE INFORMATION CONTAINED
IN THIS DRAWING IS THE SOLE
PROPERTY OF On-Q/LEGRAND.
ANY REPRODUCTION IN PART OR
AS A WHOLE WITHOUT THE WRITTEN
PERMISSION OF On-Q/LEGRAND
IS PROHIBITED. DRAWING IS SUBJECT
TO CHANGE WITHOUT NOTICE.

on·Q
legrand
P.O. Box 60907
Harrisburg, PA 17106-0907
1-800-321-2343

TITLE: 14IN ENCLOSURE W/ KNOCK-OUTS NO COVER

SIZE	DWG NO	FILE NAME	CUST REV
B	EN1485	CD-EN1485	1

REVISED DATE	SCALE	SHEET
4/28/08	NONE	1 OF 1

ACAD