Standby Generators Air Cooled 20kW

Gas Engine Generator Sets

Continuous Standby Power Rating:

- EGEN20A (Aluminum) - 20 kW 60Hz

Features:

- True Power® Electrical Technology
- Two Line LCD Digital Controller
- Electronic Governor
- External Main Circuit Breaker, System Status & Maintenance Interval LED's and GFCI Duplex Outlet
- Flexible Fuel Line Connector
- Composite Mounting Pad
- Natural Gas or LP Gas Operation
- UL 2200 Listed

Benefits:

- Total commitment to component testing, reliability, environmental, destruction and life, plus testing to applicable CSA, NEMA, EGSA, and other standards.
- True Power® Electrical Technology: Superior harmonics and sine wave form produce less than 5% Total Harmonic Distortion for utility quality power. This allows confident operation of sensitive electronic equipment and micro-chip based appliances, such as variable speed HVAC.
- Test Criteria:
  - Prototype Tested Nema Mg1-22 Evaluation
  - System Torsional Tested
  - Motor Starting Ability
- Solid-state, frequency compensated voltage regulation. This state-of-the-art power maximizing regulation system is standard on all Eaton models. It provides optimized fast response to changing load conditions and maximum motor starting capability by electronically torque-matching the surge loads to the engine.
- Single source service response from the industry's best dealer network provides parts and service know-how for the entire unit.

EATON

Table 1. Features

	Features	Benefits
Engine	• OHVI Design • "Spiny-lok" cast iron cylinder walls Electronic ignition/spark advance • Full pressure lubrication system • Low oil pressure shutdown system • High temperature shutdown	• Maximizes engine "breathing" for increased fuel efficiency. Plateau honed cylinder walls and plasma moly rings help engine run cooler, reducing oil consumption. Because heat is the primary cause of engine wear, the OHVI has a significantly longer life than competitive engines. • Rigid construction and added durability provide long engine life. • These features combine to assure smooth, quick starting every time. • Superior lubrication to all vital bearings means better performance, less maintenance and significantly longer engine life. Now featuring a 2 year/200 hour oil change interval. • Superior shutdown protection prevents catastrophic engine damage due to low oil. • Prevents damage due to overheating.
Generator	• Revolving field • Skewed stator • Displaced phase excitation • Automatic voltage regulation • UL 2200 Listed	• Allows for smaller, light weight unit that operates 25% more efficiently than a revolving armature generator. • Produces a smooth output waveform for compatibility with electronic equipment. • Maximizes motor starting capability. • Regulates the output voltage to ±2% prevents damaging voltage spikes. • For your safety
Transfer Switch	Sold Separately	
Controls	• Manual/Auto/Off switch • Utility voltage sensing • Utility interrupt delay • Engine warm-up • Engine cool-down • Seven day exerciser • Timed Trickle Battery charger • Main Line Circuit Breaker • Electronic governor	• Selects the operating mode. • Constantly monitors utility voltage, setpoints 65% dropout, 75% pick-up, of standard voltage. • Prevents nuisance start-ups of the engine, adjustable 10-30 seconds. • Ensures engine is ready to assume the load, setpoint approximately 10 seconds. • Allows engine to cool prior to shutdown, setpoint approximately 1 minute. • Operates engine to prevent oil seal drying and damage between power outages. • Maintains battery charge level to insure starting. • Protects generator from overload. • Maintains constant 60 Hz frequency.
Unit	• Weather protective enclosure • Enclosed critical grade muffler • Small, compact, attractive	• Ensures protection against mother nature. Hinged key locking roof panel for security. Lift-out front for easy access to all routine maintenance items. Electrostatically applied textured epoxy paint for added durability. • Quiet, critical grade muffler is mounted inside the unit to prevent injuries. • Makes for an easy, eye appealing installation.
Installation System	• 1' Flexible Fuel Line Connector • Composite Mounting Pad	• Easy Installation

Table 2. Specifications

Generator	EGEN20A
Rated Maximum Continuous Power Capacity (LP)	20,000 Watts*
Rated Maximum Continuous Power Capacity (NG)	18,000 Watts*
Rated Voltage	120/240
Rated Maximum Continuous Load Current 240 Volts	83.3 LP/75 NG
Total Harmonic Distortion	Less than 5%
Main Line Circuit Breaker	100 Amp
Phase	1
Number of Rotor Poles	2
Rated AC Frequency	60Hz
Power Factor	1
Battery Requirement (not included)	Group 26R, 12 Volts & 525 Cold-cranking Amps Min.
Unit Weight	451 Pounds
Dimensions (L" x W" x H")	48 x 25 x 29
Sound output in dB(A) at 23 ft. with generator operating at normal load	66
Sound output in dB(A) at 23 ft. with generator in Quiet-Test™ low speed exercise mode	60
Engine	
Type of Engine	OHVI V-TWIN
Number of Cylinders	2
Rated Horsepower	36 @ 3,600 rpm
Displacement	999cc
Cylinder Block	Aluminum w/ Cast Iron Slv.
Valve Arrangement	Overhead Valve
Ignition System	Solid-state w/ Magneto
Governor System	Electronic
Compression Ratio	9.5:1
Starter	12 Vdc
Oil Capacity Including Filter	Approx. 1.9 Qts.
Operating RPM	3,600
Fuel Consumption **Natural Gas cu.ft./hr: 1/2 Load / Full Load** **Liquid Propane ft3/hr (gal/hr): 1/2 Load / Full Load**	 206 / 294 69 (1.89) / 106 (2.90)
Required fuel pressure to generator fuel inlet at all load ranges - 5 to 7 inches of water column for natural gas, 10 to 12 inches of water column for LP gas	
Controls	
2-Line Plain Text LCD Display	Simple user interface for ease of operation
Mode Switch **-Auto** **-Off** **-Manual/Test (start)**	 Automatic Start on Utility failure. 7 day exerciser Stops unit. Power is removed. Control and charger still operate Start with starter control, unit stays on. If utility fails, transfer to load takes place
Engine Start Sequence	Cyclic cranking: 16 sec. on, 7 rest (90 sec. maximum duration)
Engine Warm-up	10 seconds
Engine Cool-Down	1 minute
Starter Lock-out	Starter cannot re-engage until 5 sec. after engine has stopped
2.5 Amp Timed Trickle Battery Charger	Standard
Automatic Voltage Regulator w/Overvoltage Protection	Standard
Automatic Low Oil Pressure Shutdown	Standard
Overspeed Shutdown	Standard / 72Hz
Overcrank Protection	Standard
Safety Fuse	Standard
All ratings in accordance with BS5514, ISO3046 and DIN6271. * Maximum wattage & current are subject to & limited by such factors as fuel Btu content, ambient temperature, altitude, engine power & condition, etc. Maximum power decreases about 3.5 percent for each 1,000 feet above sea level; and also will decrease about 1 percent for each 12° C (10° F) above 15.5° C (60°F).	

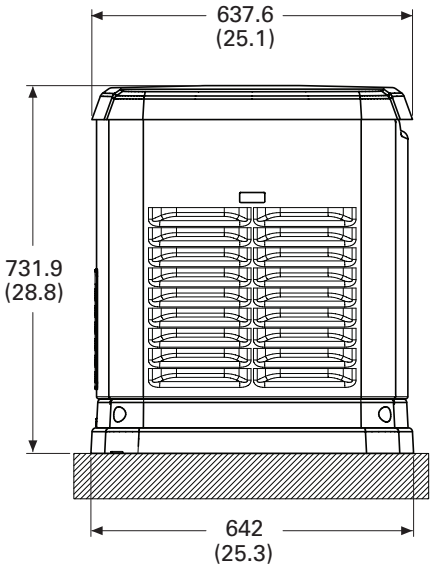

Left Side View

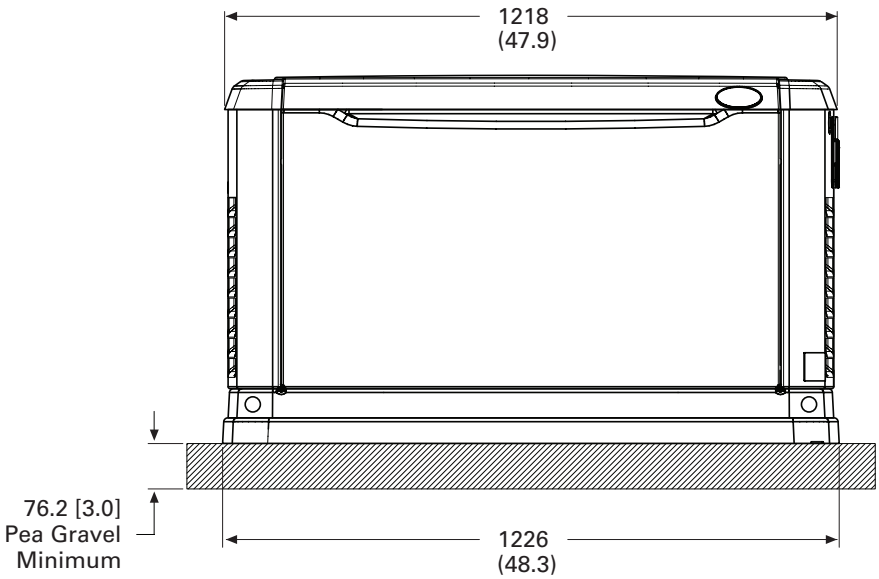

Front View

Figure 1. Air Cooled Generator 20kW

Design and specifications subject to change without notice. Dimensions shown are approximate. Contact your Eaton Salesperson for certified drawings. Do not use these dimensions for installation purposes.

Eaton Corporation
Electrical Sector
1000 Cherrington Parkway
Moon Township, PA 15108
United States
877-ETN-CARE (877-386-2273)
Eaton.com

Printed in USA
Publication No. TD00405004E
August 2009