PASS & SEYMOUR®
Straight Blade and Turnlok® Rubber Dust-Tight Plugs & Connectors

14, 15, 24, 25, 26, 27, 28, 29 Series

Severe Duty Devices for Industrial Applications

Made of thermoplastic elastomer, these plugs and connectors are built to resist the damaging effects of impacts, oils, chemicals, heat and weather.
With captive assembly screws, a self-centering cord clamp and keyed body for simple and fast assembly.

FEATURES & BENEFITS

Industrial-strength brass blades & contacts for long-lasting superior corrosion resistance.

Thermoplastic elastomer construction stands up to impacts oils, chemicals, heat, and weather.

Quick-drive assembly screws allow for fast installation, saving time and money.

Two-screw self-centering cable clamp secures wire and provides superior strain relief.

Keyed body & cover for easy assembly and alignment.

Recessed assembly screws are isolated from live parts.

FIELD USES/VERTICAL MARKETS

- Food & Beverage Processing
- Chemical Processing
- Temporary Power
- Pulp & Paper Mills
- Mining
- Industrial Manufacturing
- Water/Waste Water
- Warehousing/Refrigeration

PASS & SEYMOUR®

Straight Blade and Turnlok®
Rubber Dust-Tight Plugs & Connectors

ORDERING INFORMATION

Catalog Number	Description	Poles/ Wires	Rating A	Rating V	NEMA Config. No.
1447	Plug, Yellow, Rubber	2P/3W	15	125	5-15P
1547	Connector, Yellow, Rubber	2P/3W	15	125	5-15R
1433P	Plug, Yellow, Rubber	2P/3W	20	125	5-20P
1533	Connector, Yellow, Rubber	2P/3W	20	125	5-20R
1449	Plug, Yellow, Rubber	2P/3W	15	250	6-15P
1549	Connector, Yellow, Rubber	2P/3W	15	250	6-15R
1448	Plug, Yellow, Rubber	2P/3W	20	250	6-20P
1548	Connector, Yellow, Rubber	2P/3W	20	250	6-20R
2447	Plug, Yellow, Rubber, Locking	2P/3W	15	125	L5-15P
2547	Connector, Yellow, Rubber, Locking	2P/3W	15	125	L5-15R
2647	Plug, Yellow, Rubber, Locking	2P/3W	20	125	L5-20P
2747	Connector, Yellow, Rubber, Locking	2P/3W	20	125	L5-20R
2847	Plug, Yellow, Rubber, Locking	2P/3W	30	125	L5-30P
2947	Connector, Yellow, Rubber, Locking	2P/3W	30	125	L5-30R
2449	Plug, Yellow, Rubber, Locking	2P/3W	15	250	L6-15P
2549	Connector, Yellow, Rubber, Locking	2P/3W	15	250	L6-15R
2648	Plug, Yellow, Rubber, Locking	2P/3W	20	250	L6-20P
2748	Connector, Yellow, Rubber, Locking	2P/3W	20	250	L6-20R
2848	Plug, Yellow, Rubber, Locking	2P/3W	30	250	L6-30P
2948	Connector, Yellow, Rubber, Locking	2P/3W	30	250	L6-30R
2434	Plug, Yellow, Rubber, Locking	2P/3W	15	277	L7-15P
2534	Connector, Yellow, Rubber, Locking	2P/3W	15	277	L7-15R
2649	Plug, Yellow, Rubber, Locking	2P/3W	20	277	L7-20P
2749	Connector, Yellow, Rubber, Locking	2P/3W	20	277	L7-20R
2849	Plug, Yellow, Rubber, Locking	2P/3W	30	277	L7-30P
2949	Connector, Yellow, Rubber, Locking	2P/3W	30	277	L7-30R
2674	Plug, Yellow, Rubber, Locking	3P/4W	20	125/250	L14-20P
2774	Connector, Yellow, Rubber, Locking	3P/4W	20	125/250	L14-20R
2874	Plug, Yellow, Rubber, Locking	3P/4W	30	125/250	L14-30P
2974	Connector, Yellow, Rubber, Locking	3P/4W	30	125/250	L14-30R
2675	Plug, Yellow, Rubber, Locking	3P/4W	20	3Ø 250	L15-20P
2775	Connector, Yellow, Rubber, Locking	3P/4W	20	3Ø 250	L15-20R
2875	Plug, Yellow, Rubber, Locking	3P/4W	30	3Ø 250	L15-30P
2975	Connector, Yelllow, Rubber, Locking	3P/4W	30	3Ø 250	L15-30R
2676	Plug, Yellow, Rubber, Locking	3P/4W	20	3Ø 480	L16-20P
2776	Connector, Yellow, Rubber, Locking	3P/4W	20	3Ø 480	L16-20R
2876	Plug, Yellow, Rubber, Locking	3P/4W	30	3Ø 480	L16-30P
2976	Connector, Yellow, Rubber, Locking	3P/4W	30	3Ø 480	L16-30R
2877	Plug, Yellow, Rubber, Locking	3P/4W	30	3ØY 600	L17-30P
2977	Connector, Yellow, Rubber, Locking	3P/4W	30	3ØY 600	L17-30R
2608	Plug, Yellow, Rubber	3P/3W NG	20	125/250	NON
2708	Connector, Yellow, Rubber	3P/3W NG	20	125/250	NON

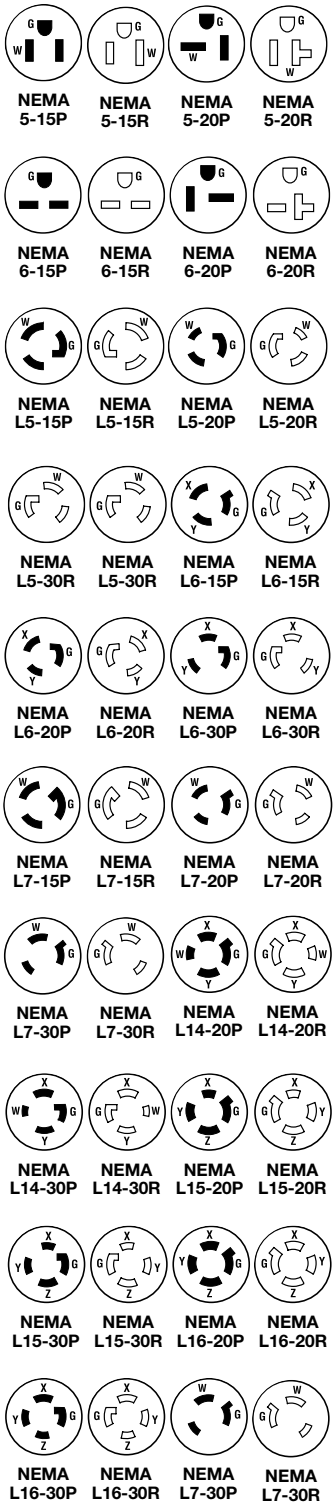

For more information on these and other P&S products refer to our Catalog or visit our web site.

PASS & SEYMOUR®
Straight Blade and Turnlok®
Rubber Dust-Tight Plugs & Connectors

legrand®

TECHNICAL INFORMATION

3rd Party Compliance

UL Listed, Standard UL498, Attachement Plugs and Receptacles.
Federal Specification WC596.
CSA Certified Standard CSA-C22.2 No. 42, General Use Receptacles and Attachment Plugs.
Conforms to NEMA WD-1.

Performance

Electrical	
Dielectric Withstand Voltage	15A = 1600V minimum, 20A & 30A = 2200V minimum
Maximum Working Voltage	15A = 277VAC, 20 & 30A = 600VAC
Current Interrupting	Certified for current interrupting at full-rated current
Temperature Rise	30°C maximum after 50 cycles at 150% rated current
Mechanical	
Cord Accommodations	Round portable service cords of diameters in accordance with the device rating as defined in UL62
Terminal Identification	15A = Green = Ground, White = Neutral, Brass = Hot 20A & 30A = “GR” and Green color = Ground, “WH” and White color = Neutral, “X”, “Y”, “Z” = Hot
Terminal Accommodation	15A = #18 AWG min. – #10 AWG max. 20A = #18 AWG min. – #8 AWG max. 30A = #18 AWG min. – #6 AWG max.
Product Indentification	Amperage, Voltage, 3rd Party Compliance, NEMA Configuration hot stamped onto device
Environmental	
Flammability	UL94 V2
Operating Temperature	Maximum continuous +75°C, minimum -40°C without impact

Materials

Body	Thermoplastic Elastomer
Terminal Chamber	Polycarbonate
Compression Nut	Nylon
Compression Grommet	Thermoplastic Elastomer
Dust Cover	Thermoplastic Elastomer
Plug Blades	Brass
Connector Contacts	Brass
Terminal Clamps	Brass
Terminal Screws Hot	Brass
Terminal Screws Hot/Neutral	Zinc-Plated Brass
Ground Screws	Zinc/Green-Plated Brass, Hex-Head
Assembly Screws	Stainless Steel

Warranty

1 Year

DIMENSIONS & NEMA CONFIGURATIONS

SMALL PLUGS

PART NUMBER	NEMA CONFIG
1447	5-15P
1443P	5-20P
1449	6-15P
1448	6-20P
2447	L5-15P
2449	L6-15P
2434	L7-15P

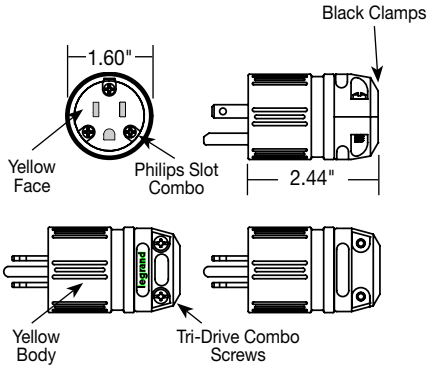

SMALL CONNECTORS

PART NUMBER	NEMA CONFIG
1547	5-15R
1533	5-20R
1549	6-15R
1548	6-20R
2547	L5-15R
2549	L6-15R
2534	L7-15R

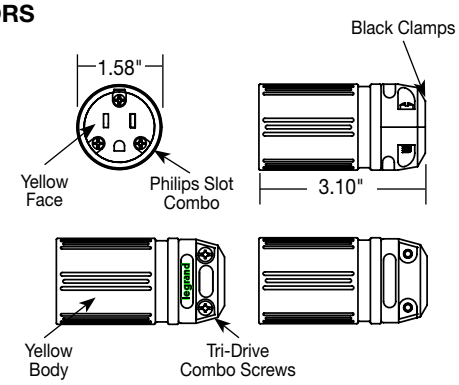

MEDIUM PLUGS

PART NUMBER	NEMA CONFIG
2647	L5-20P
2648	L6-20P
2608	NON
2649	L7-20P
2674	L14-20P
2675	L15-20P
2676	L16-20P

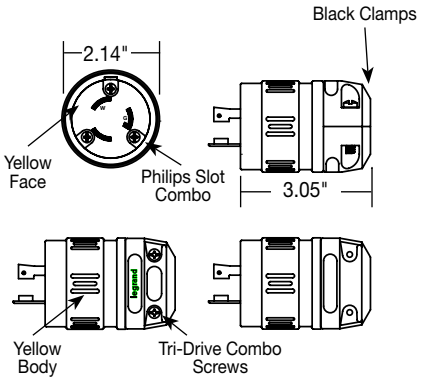

MEDIUM CONNECTORS

PART NUMBER	NEMA CONFIG
2747	L5-20R
2748	L6-20R
2708	NON
2749	L7-20R
2774	L14-20R
2775	L15-20R
2776	L16-20R

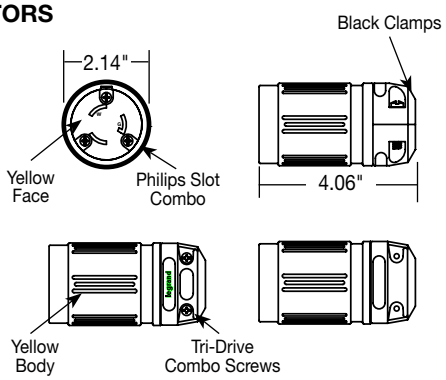

LARGE PLUGS

PART NUMBER	NEMA CONFIG
2847	L5-30P
2848	L6-30P
2876	L16-30P
2877	L17-30P
2849	L7-30P
2874	L14-30P
2875	L15-30P

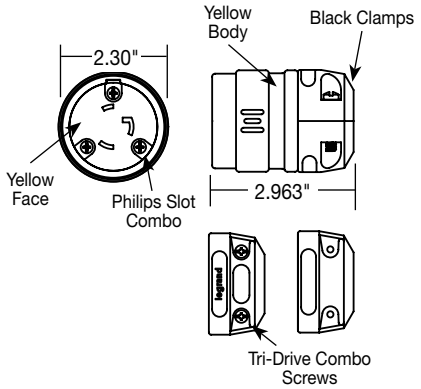

LARGE CONNECTORS

PART NUMBER	NEMA CONFIG
2947	L5-30R
2948	L6-30R
2949	L7-30R
2974	L14-30R
2975	L15-30R
2976	L16-30R
2977	L17-30R

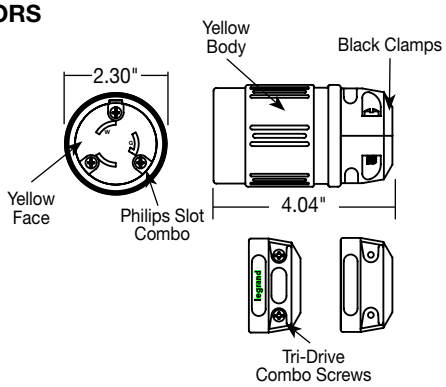

ALSO AVAILABLE...

- Surge Products
- Flexcor® Wire Mesh Grips
- Turnlok® Locking Devices
- Portable GFCI
- IEC 309 Industrial Products
- Straight Blade Plugs & Connectors
- Ground Continuity Monitoring (GCM)

Electrical Wiring Systems

P.O. Box 4822
Syracuse, NY 13221-4822
Phone: 1.800.776.4035
www.legrand.us/passandseymour

570 Applewood Crescent
Vaughan, Ontario L4K 4B4
Phone:905.738.9195
www.legrand.ca

SF20149 – May 2014 – For latest specs visit www.legrand.us/passandseymour

© Copyright 2014 All Rights Reserved Legrand EWS/CGXTP

PASS & SEYMOUR®
Straight Blade and Turnlok® Rubber Dust-Tight Plugs & Connectors

14, 15, 24, 25, 26, 27, 28, 29 Series

Severe Duty Devices for Industrial Applications

Made of thermoplastic elastomer, these plugs and connectors are built to resist the damaging effects of impacts, oils, chemicals, heat and weather.
With captive assembly screws, a self-centering cord clamp and keyed body for simple and fast assembly.

FEATURES & BENEFITS

Industrial-strength brass blades & contacts for long-lasting superior corrosion resistance.

Thermoplastic elastomer construction stands up to impacts oils, chemicals, heat, and weather.

Quick-drive assembly screws allow for fast installation, saving time and money.

Two-screw self-centering cable clamp secures wire and provides superior strain relief.

Keyed body & cover for easy assembly and alignment.

Recessed assembly screws are isolated from live parts.

FIELD USES/VERTICAL MARKETS

- Food & Beverage Processing
- Chemical Processing
- Temporary Power
- Pulp & Paper Mills
- Mining
- Industrial Manufacturing
- Water/Waste Water
- Warehousing/Refrigeration

PASS & SEYMOUR®

Straight Blade and Turnlok®
Rubber Dust-Tight Plugs & Connectors

ORDERING INFORMATION

Catalog Number	Description	Poles/ Wires	Rating A	Rating V	NEMA Config. No.
1447	Plug, Yellow, Rubber	2P/3W	15	125	5-15P
1547	Connector, Yellow, Rubber	2P/3W	15	125	5-15R
1433P	Plug, Yellow, Rubber	2P/3W	20	125	5-20P
1533	Connector, Yellow, Rubber	2P/3W	20	125	5-20R
1449	Plug, Yellow, Rubber	2P/3W	15	250	6-15P
1549	Connector, Yellow, Rubber	2P/3W	15	250	6-15R
1448	Plug, Yellow, Rubber	2P/3W	20	250	6-20P
1548	Connector, Yellow, Rubber	2P/3W	20	250	6-20R
2447	Plug, Yellow, Rubber, Locking	2P/3W	15	125	L5-15P
2547	Connector, Yellow, Rubber, Locking	2P/3W	15	125	L5-15R
2647	Plug, Yellow, Rubber, Locking	2P/3W	20	125	L5-20P
2747	Connector, Yellow, Rubber, Locking	2P/3W	20	125	L5-20R
2847	Plug, Yellow, Rubber, Locking	2P/3W	30	125	L5-30P
2947	Connector, Yellow, Rubber, Locking	2P/3W	30	125	L5-30R
2449	Plug, Yellow, Rubber, Locking	2P/3W	15	250	L6-15P
2549	Connector, Yellow, Rubber, Locking	2P/3W	15	250	L6-15R
2648	Plug, Yellow, Rubber, Locking	2P/3W	20	250	L6-20P
2748	Connector, Yellow, Rubber, Locking	2P/3W	20	250	L6-20R
2848	Plug, Yellow, Rubber, Locking	2P/3W	30	250	L6-30P
2948	Connector, Yellow, Rubber, Locking	2P/3W	30	250	L6-30R
2434	Plug, Yellow, Rubber, Locking	2P/3W	15	277	L7-15P
2534	Connector, Yellow, Rubber, Locking	2P/3W	15	277	L7-15R
2649	Plug, Yellow, Rubber, Locking	2P/3W	20	277	L7-20P
2749	Connector, Yellow, Rubber, Locking	2P/3W	20	277	L7-20R
2849	Plug, Yellow, Rubber, Locking	2P/3W	30	277	L7-30P
2949	Connector, Yellow, Rubber, Locking	2P/3W	30	277	L7-30R
2674	Plug, Yellow, Rubber, Locking	3P/4W	20	125/250	L14-20P
2774	Connector, Yellow, Rubber, Locking	3P/4W	20	125/250	L14-20R
2874	Plug, Yellow, Rubber, Locking	3P/4W	30	125/250	L14-30P
2974	Connector, Yellow, Rubber, Locking	3P/4W	30	125/250	L14-30R
2675	Plug, Yellow, Rubber, Locking	3P/4W	20	3Ø 250	L15-20P
2775	Connector, Yellow, Rubber, Locking	3P/4W	20	3Ø 250	L15-20R
2875	Plug, Yellow, Rubber, Locking	3P/4W	30	3Ø 250	L15-30P
2975	Connector, Yelllow, Rubber, Locking	3P/4W	30	3Ø 250	L15-30R
2676	Plug, Yellow, Rubber, Locking	3P/4W	20	3Ø 480	L16-20P
2776	Connector, Yellow, Rubber, Locking	3P/4W	20	3Ø 480	L16-20R
2876	Plug, Yellow, Rubber, Locking	3P/4W	30	3Ø 480	L16-30P
2976	Connector, Yellow, Rubber, Locking	3P/4W	30	3Ø 480	L16-30R
2877	Plug, Yellow, Rubber, Locking	3P/4W	30	3ØY 600	L17-30P
2977	Connector, Yellow, Rubber, Locking	3P/4W	30	3ØY 600	L17-30R
2608	Plug, Yellow, Rubber	3P/3W NG	20	125/250	NON
2708	Connector, Yellow, Rubber	3P/3W NG	20	125/250	NON

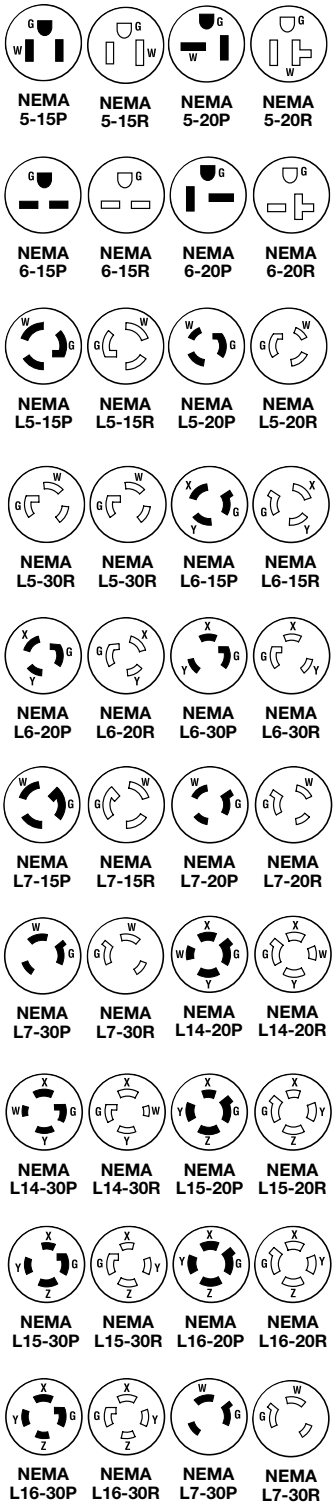

For more information on these and other P&S products refer to our Catalog or visit our web site.

PASS & SEYMOUR®
Straight Blade and Turnlok®
Rubber Dust-Tight Plugs & Connectors

legrand®

TECHNICAL INFORMATION

3rd Party Compliance

UL Listed, Standard UL498, Attachement Plugs and Receptacles.
Federal Specification WC596.
CSA Certified Standard CSA-C22.2 No. 42, General Use Receptacles and Attachment Plugs.
Conforms to NEMA WD-1.

Performance

Electrical	
Dielectric Withstand Voltage	15A = 1600V minimum, 20A & 30A = 2200V minimum
Maximum Working Voltage	15A = 277VAC, 20 & 30A = 600VAC
Current Interrupting	Certified for current interrupting at full-rated current
Temperature Rise	30°C maximum after 50 cycles at 150% rated current
Mechanical	
Cord Accommodations	Round portable service cords of diameters in accordance with the device rating as defined in UL62
Terminal Identification	15A = Green = Ground, White = Neutral, Brass = Hot 20A & 30A = “GR” and Green color = Ground, “WH” and White color = Neutral, “X”, “Y”, “Z” = Hot
Terminal Accommodation	15A = #18 AWG min. – #10 AWG max. 20A = #18 AWG min. – #8 AWG max. 30A = #18 AWG min. – #6 AWG max.
Product Indentification	Amperage, Voltage, 3rd Party Compliance, NEMA Configuration hot stamped onto device
Environmental	
Flammability	UL94 V2
Operating Temperature	Maximum continuous +75°C, minimum -40°C without impact

Materials

Body	Thermoplastic Elastomer
Terminal Chamber	Polycarbonate
Compression Nut	Nylon
Compression Grommet	Thermoplastic Elastomer
Dust Cover	Thermoplastic Elastomer
Plug Blades	Brass
Connector Contacts	Brass
Terminal Clamps	Brass
Terminal Screws Hot	Brass
Terminal Screws Hot/Neutral	Zinc-Plated Brass
Ground Screws	Zinc/Green-Plated Brass, Hex-Head
Assembly Screws	Stainless Steel

Warranty

1 Year

DIMENSIONS & NEMA CONFIGURATIONS

SMALL PLUGS

PART NUMBER	NEMA CONFIG
1447	5-15P
1443P	5-20P
1449	6-15P
1448	6-20P
2447	L5-15P
2449	L6-15P
2434	L7-15P

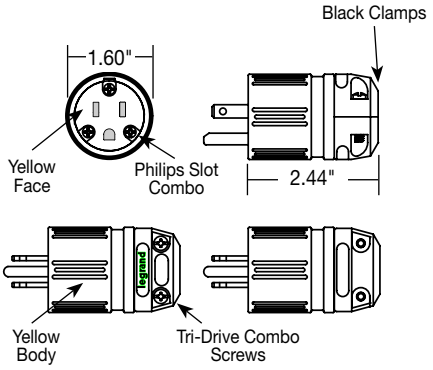

SMALL CONNECTORS

PART NUMBER	NEMA CONFIG
1547	5-15R
1533	5-20R
1549	6-15R
1548	6-20R
2547	L5-15R
2549	L6-15R
2534	L7-15R

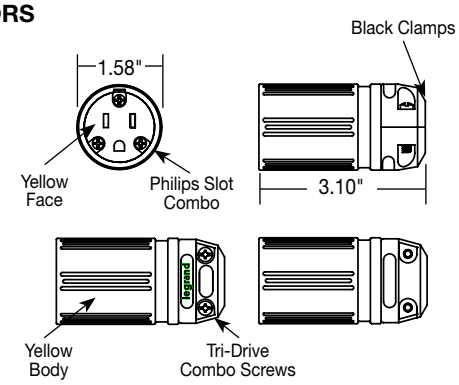

MEDIUM PLUGS

PART NUMBER	NEMA CONFIG
2647	L5-20P
2648	L6-20P
2608	NON
2649	L7-20P
2674	L14-20P
2675	L15-20P
2676	L16-20P

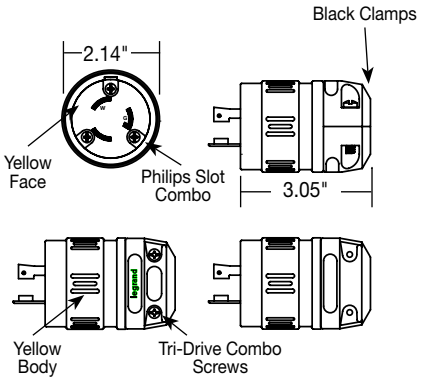

MEDIUM CONNECTORS

PART NUMBER	NEMA CONFIG
2747	L5-20R
2748	L6-20R
2708	NON
2749	L7-20R
2774	L14-20R
2775	L15-20R
2776	L16-20R

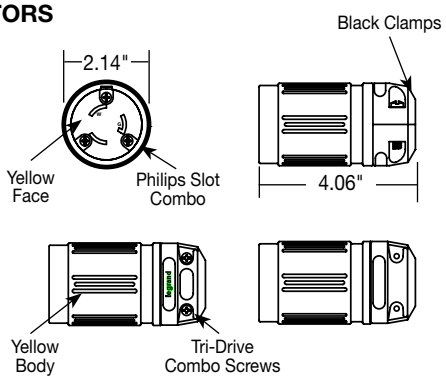

LARGE PLUGS

PART NUMBER	NEMA CONFIG
2847	L5-30P
2848	L6-30P
2876	L16-30P
2877	L17-30P
2849	L7-30P
2874	L14-30P
2875	L15-30P

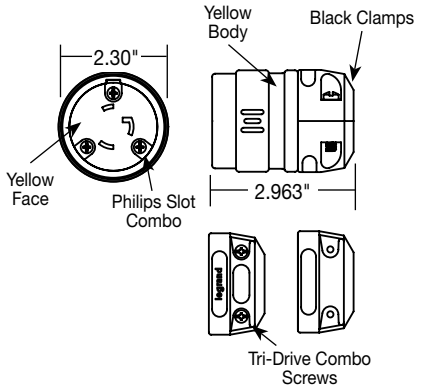

LARGE CONNECTORS

PART NUMBER	NEMA CONFIG
2947	L5-30R
2948	L6-30R
2949	L7-30R
2974	L14-30R
2975	L15-30R
2976	L16-30R
2977	L17-30R

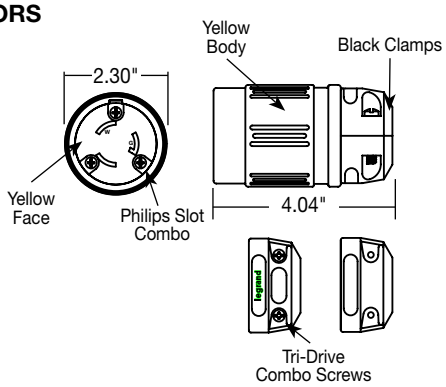

ALSO AVAILABLE...

- Surge Products
- Flexcor® Wire Mesh Grips
- Turnlok® Locking Devices
- Portable GFCI
- IEC 309 Industrial Products
- Straight Blade Plugs & Connectors
- Ground Continuity Monitoring (GCM)

Electrical Wiring Systems

P.O. Box 4822
Syracuse, NY 13221-4822
Phone: 1.800.776.4035
www.legrand.us/passandseymour

570 Applewood Crescent
Vaughan, Ontario L4K 4B4
Phone:905.738.9195
www.legrand.ca

SF20149 – May 2014 – For latest specs visit www.legrand.us/passandseymour

© Copyright 2014 All Rights Reserved Legrand EWS/CGXTP