LITHONIA LIGHTING®

Catalog Number	
Notes	
Type	

LBR6

6" Open and Wallwash LED Retrofit/Remodel Downlight

Retrofit | Remodel

Open Trim

Wallwash Trim

FEATURES & SPECIFICATIONS

INTENDED USE — Typical applications include corridors, lobbies, conference rooms and private offices.

CONSTRUCTION — Retrofit, remodel, and new construction mounting types. See table for compatible ceiling openings and thickness range.

Optional goof rings available for additional overlap trim coverage.

1/2"-1-1/2" ceiling thickness

25° ambient temperature

IC rated up to 1000lm

OPTICS — LEDs are binned to a 3-step Mac Adam Ellipse. 55° cutoff

New construction frame accessories approved for 8 (4 in/4 out) No. 12 AWG conductors rated for 90°C through wiring.

80CRI standard (90CRI optional)

UGR — UGR is zero for fixtures aimed at nadir with a cut-off equal to or less than 60deg, per CIE 117-1996 Discomfort Glare in Interior Lighting. UGR FAQ

ELECTRICAL — Adjustable lumen output with four module options. Fixed lumen options also available.

MVOLT 120/277V 50/60Hz driver (0-10V & 120V Phase Dimming to 10% or 1% min dimming level)

FCC CFR Title 47 Part 15 Class A for 277V. FCC CFR Title 47 Part 15 Class B for 120V.

LUMEN MAINTENANCE — L80 at 60,000 hours

LISTINGS — Certified to US and Canadian safety standards. Damp location standard (Wet Location (WL) optional, requires covered ceiling). TAA compliant. UFC (3-530-01) specification compliant for power factor and THD. GSA P100 6.2.4 compliant for power quality at full output; compliant up to 2000lm at fully dimmed output. Drivers are ROHS compliant

Title 24 compliant (90CRI, up to 1000lm).

WARRANTY — 5-year limited warranty. This is the only warranty provided and no other statements in this specification sheet create any warranty of any kind. All other express and implied warranties are disclaimed. Complete warranty terms located at: www.acuitybrands.com/support/warranty/terms-and-conditions

Note: Actual performance may differ as a result of end-user environment and application.
All values are design or typical values, measured under laboratory conditions at 25 °C.
Specifications subject to change without notice.

Performance Data

LBR6 AR LSS MWD		80CRI							
Lumen Output	Wattage	30K/80CRI		35K/80CRI		40K/80CRI		50K/80CRI	
		Delivered Lumens	LPW	Delivered Lumens	LPW	Delivered Lumens	LPW	Delivered Lumens	LPW
AL01 (500LM)	6	571	99	585	101	599	103	617	105
AL01 (750LM)	9	905	102	926	103	948	105	977	108
AL01 (1000LM)	13	1270	98	1300	100	1330	102	1372	104
AL02 (1000LM)	13	1346	108	1378	110	1410	112	1454	115
AL02 (1500LM)	19	1965	105	2011	107	2059	109	2123	111
AL02 (2000LM)	25	2476	100	2533	101	2593	103	2674	106
AL03 (2000LM)	25	2547	103	2606	105	2668	107	2751	109
AL03 (2500LM)	32	3075	98	3146	100	3221	101	3321	104
AL03 (3000LM)	38	3492	93	3573	95	3658	96	3771	99
AL04 (4000LM)	39	4180	107	4265	109	4350	112	4393	113
AL04 (4500LM)	44	4613	105	4707	107	4801	109	4848	110
AL04 (5000LM)	49	5017	102	5119	104	5221	107	5273	108

LBR6 MS MWD		80CRI							
Lumen Output	Wattage	30K/80CRI		35K/80CRI		40K/80CRI		50K/80CRI	
		Delivered Lumens	LPW	Delivered Lumens	LPW	Delivered Lumens	LPW	Delivered Lumens	LPW
AL01 (500LM)	6	480	99	584	101	597	102	616	105
AL01 (750LM)	9	760	102	924	103	946	105	975	108
AL01 (1000LM)	13	1067	98	1297	100	1328	102	1369	104
AL02 (1000LM)	13	1131	108	1375	110	1408	112	1451	115
AL02 (1500LM)	19	1651	105	2007	106	2055	108	2118	111
AL02 (2000LM)	25	2079	99	2528	101	2588	103	2668	105
AL03 (2000LM)	25	2139	103	2601	104	2663	106	2745	109
AL03 (2500LM)	32	2583	98	3140	99	3214	101	3314	103
AL03 (3000LM)	38	2933	93	3566	94	3651	96	3764	98
AL04 (4000LM)	39	3511	90	3583	92	3654	94	3690	95
AL04 (4500LM)	44	3875	88	3954	90	4033	92	4072	93
AL04 (5000LM)	49	4214	86	4300	88	4386	90	4429	90

- Tested in accordance with IESNA LM-79-08. u8226
- Tested to current IES and NEMA standards under stabilized laboratory conditions.
- CRI: 80 typical

design select

Items marked by a shaded background qualify for the Design Select program and ship in 15 days or less. To learn more about Design Select, visit www.acuitybrands.com/designselect.
*See ordering tree for details

battery pack

Design Select options indicated by this color background.

Module ordering

ORDERING INFORMATION Lead times will vary depending on options selected. Consult with your sales representative.

Example: LBR6 AL02 SWW1 AR LSS MWD MVOLT UGZ 90CRI

Series		Lumens ‡				Color temperature ‡		Reflector Color		Reflector Flange ‡		Reflector Finish	
		Adjustable Lumen Output		**Fixed Lumen Output**		**Switchable CCT**							
LBR6	6" Retrofit	AL01	500/750/1000lm	05LM	500lm	SWW1	3000K-3500K-4000K-5000K	AR	Clear	(blank)	Self-flanged	LSS	Semi-specular
LBR6WW ‡	6" Retrofit Wallwash	AL02	1000/1500/2000lm	07LM	750lm	**Fixed CCT**		BR ‡	Black painted	TRW	White painted flange		
		AL03	2000/2500/3000lm	10LM	1000lm	27K	2700K	MS ‡	Metallic Silver	TRBL	Black painted flange		
		AL04	4000/4500/5000lm	15LM	1500lm	30K	3000K	WR ‡	White painted	FCPC	Custom painted flange only		
				20LM	2000lm	35K	3500K	TCPC ‡	Custom painted trim	FRALTBD	RAL painted flange only		
				25LM	2500lm	40K	4000K	TRALTBD ‡	RAL painted trim				
				30LM	3000lm	50K	5000K						
				40LM	4000lm								
				45LM	4500lm								
				50LM	5000lm								

Distribution		Voltage	Driver		Emergency ‡		Control Input ‡		Options	
MWD	Medium wide (1.0 s/mh)	MVOLT	UGZ	Universal dimming to 10% 0-10V; line voltage dimming (120V)	(blank)	No Emergency Needed	(blank)	No Control Input Needed	90CRI	High CRI (90+)
WD	Wide (1.2s/mh)	120	UGZ1	Universal dimming to 1% 0-10V; line voltage dimming (120V)	ELR	Battery pack (10W constant power) Non-T20 Compliant remote test switch	JOT	Wireless room control with "Just One Touch" pairing	AT ‡	Airtight
WW ‡	Wallwash	277	DALI ‡	DALI dimming to 1%	ETS	Iota Emergency Transfer System	NLIGHT	Embedded wired controls from nLight	EC1 ‡	Extended Conduit (18")
		347	D1	Minimum dimming 1% driver for use with JOT	E10WCP	Battery pack (10W constant power) T20 Compliant integral test switch	NLIGHTER	Embedded wired controls from nLight with UL924 listed emergency operation	EC6 ‡	Extended Conduit (6ft)
					E10WCPR	Battery pack (10W constant power) T20 Compliant remote test switch	NLTAIR2	nLight® Air enabled	WL ‡	Wet Location (IP55)
					E10WRSTAR	Emergency battery pack, 10W with remote test switch and Iota STAR technology	NLTAIREM2	nLight® AIR Dimming Pack Wireless Controls. UL924 Emergency Operation, via power interrupt detection.	QDS ‡	Quick disconnect plugs
									CP ‡	Chicago Plenum

NOTE: ‡ indicates option value has ordering restrictions. Please reference the Option Value Ordering Restictions chart below.

‡ Option Value Ordering Restrictions

Options	Restriction
Adjustable Lumens/CCT	Adjustable Lumen Output and Switchable CCT must be specified together (for Example: AL01 SWW1)
Fixed Lumens/CCT	Fixed Lumen Output and Fixed CCT must be specified together (for Example: 10LM 30K)
WW	Not available with WL, EL, E10WCP.
MS, WR, BR	Not available with LSS reflector finish
WR	Not available with TRW
BR	Not available with TRBL
TRALTBD, FRALTBD	RALTBD for pricing only. Replace with applicable RAL number and finish when ready to order. See the RAL BROCHURE for available color options. Not available with TCPC or FCPC.
TCPC, FCPC	CPC options for pricing only. Custom color chip needs to be sent in to your Customer Resolution specialist before order can be processed. Click HERE for more details. Not available with TRAL or FRAL.
TRW, TRBL	Available with MS and AR reflectors only.
LSS	Not available with BR or WR or MS
347V	Not available with CP, QDS, ELR, E10WCP, E10WCPR, NLIGHT, NLIGHTER, NLTAIR2, or NLTAIREM2
DALI	Not available with fixed lumens or CCT. Max 4500 lumens.
E10WCPR	Not available with EC1, EC6, AT, QDS, CP, 347V, NLIGHTER, NLTAIREM2, WL, AL03 & AL04 w/DALI, OR 2000-4500 lumens w/JOT.
E10WCP	Not available with WW, EC1, EC6, AT, QDS, CP, 347V, NLIGHTER, NLTAIREM2, WL, AL03 & AL04 w/DALI, OR 2000-4500 lumens w/JOT.
E10WSTAR	Not available with wet location, EC1, EC6, QDS, CP, 347V, NLIGHTER, NLTAIREM2, AL03 & AL04 w/DALI, OR 2000-4500 lumens w/JOT. Top access installation or 17.5" plenum clearance required for roomside installation. Not available with integral test switch
ELR	Not available EC1, EC6, QDS, CP, 347V, NLIGHTER, NLTAIREM2, AL03 & AL04 w/DALI, OR 2000-4500 lumens w/JOT.
ETS	Not available with, QDS, ELR, E10WCP, E10WCPR, 347V, JOT, NLIGHT, NLIGHTER, NLTAIR2, NLTAIREM2, DALI, or D1 driver
JOT	Only available with D1 driver. Not availabe with CP, NLIGHT, NLIGHTER, NLTAIR2, NLTAIREM2, UGZ, or DALI drivers. Max 4500 lumens. Fixed lumens and CCT only. Not available with 2000-4500lm in conjunction with emergency batterypacks.
NLIGHT	Must specify UGZ1. Not available with CP, QDS, JOT, ETS, UGZ, DALI, or D1 drivers. Not available with 347V.
NLIGHTER	Must specify UGZ1. Not available with CP, QDS, ELR, E10WCP, E10WCPR, DALI, or D1 drivers. Not available with 347V.
NLTAIR2	Must specify UGZ1. Not available with CP, QDS, JOT, ETS, UGZ, DALI, or D1 drivers. See UL 924 Sequence of Operation table. Non-emergency luminaires with this option can be used as a normal power sensing device for nLight AIR devices and luminaires with EM emergency options. Not available with 347V.
NLTAIREM2	Must specify UGZ1. Not available with CP, QDS, JOT, ETS, ELR, E10WCP, E10WCPR, DALI, D1, OR D10 drivers. See UL 924 Sequence of Operation table.
WL	Not available with WW, All CP is wet location, except WW (Damp). IP55 rated. Not available with E10WCP
QDS	Must be specified for use with LBR_PFWQDS. Not Available with CP, emergency options, or 347V.
EC1, EC6	Not Available with CP,QDS, ELR, E10WCP, or E10WCPR.
AT	Standard for CP and IP55, not availabe with WW. Not available with E10WCP
CP	Not available with, QDS, EC1, EC6, ELR, E10WCPR, 347V, JOT, NLTAIR2, NLTAIREM2, D1 drivers. For new construction applications, must be specified with LBR_PFWCP.

© 2020-2025 Acuity Brands Lighting, Inc. All rights reserved. Rev. 08/15/25

Accessories: *Order as separate catalog number. Shipped separately.*	
LBRGR78 **	Goof ring 7-3/4" to 8-3/4" for LBR6 (** specify BR,WR)
LBRCPGR78 **	Chicago Plenum Goof ring 7-3/4" to 8-3/4" for LBR6 (** specify BR, WR)
LBR06 AR LSS TRIM	6" clear, semi-specular reflector
LBR06 ** TRIM	6" reflector (** specify MS, WR, BR)
LBRW6 AR LSS TRIM	6" clear, semi-specular wallwash
LBRW6 ** TRIM	6" wallwash (** specify MS, WR, BR)
LBR46810HB FPAN U	Mounting plate 4"-10" unit pack
LBR46810HB FPAN J10	Mounting plate 4"-10" 10-pack
LBR SDT 347V 75W ASM	Field installed 347V Step-down transformer
SCA6	Sloped Ceiling Adapter. Degree of slope must be specified (5D, 10D, 15D, 20D, 25D, 30D). Ex: SCA6 10D.

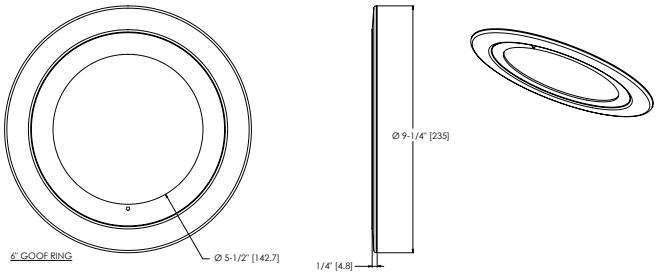

Module	Mounting Frame Accessory	Compatible Fixture Options
LBR6	LBR6PF	QDS, EC1, EC6,
	LBR6PFW	Base fixture only
	LBR6PFW EM	ELR, E10WCPR, E10WCP, E10WRSTAR
	LBR6PFWQDS	QDS fixture only
LBR6WW	LBR6PF	QDS, EC1, EC6,
	LBR6PFW	Base fixture only
	LBR6PFW EM	ELR, E10WCPR, E10WRSTAR
	LBR6PFWQDS	QDS fixture only

Emergency Battery Pack Options - Field Installable

Battery Model Number	Wattage	Runtime (Minutes)	Lumen Output* @ 120 Lumens/Watt	Other
ILB CP07 2H A	7W	120	840	Storm Shelter / 2 Hour Runtime
ILB CP10 A	10W	90	1200	
ILBLP CP10 HE SD A+	10W	90	1200	Title 20, Self Diagnostic
ILBLP CP15 HE SD A+	15W	90	1800	Title 20, Self Diagnostic
ILB CP20 HE A	20W	90	2400	Title 20
ILB CP20 HE SD A	20W	90	2400	Title 20, Self Diagnostic
ILBHI CP10 HE SD A+	10W	90	1200	347-480V AC Input, Title 20, Self Diagnostic
ILBHI CP15 HE SD A+	15W	90	1800	347-480V AC Input, Title 20, Self Diagnostic

All the above are UL Listed products that are certified for field install external/remote to the fixture.
*Minimum delivered lumen output to assist in product selection for increased fixture mounting height.
The CP10 delivered emergency illumination outperforms legacy 1400 lumen fluorescent emergency ballast.
Please contact us at techsupport@iotaengineering.com for any Emergency Battery related questions.

© 2020-2025 Acuity Brands Lighting, Inc. All rights reserved. Rev. 08/15/25

LBR6

PLENUM DEPTH TABLE				
Aperture Size/Output	Plenum Depth*	IC	Non-IC	Non-IC Marked Spacing
LBR6 500-1000 Lumen	3.69	X		
LBR6 1000-2000 Lumen	3.69		X	
LBR6 2000-3000 Lumen	-			24x24x9
LBR6 4000-5000 Lumen	-			24x24x9

*Above unfinished 1/2" ceiling plane

CEILING COVERAGE TABLE								
Series		Aperture	Trim Flange OD	Min ceiling opening	Ceiling Thickness	Max ceiling opening	Max Ceiling Opening with Goof Ring	Overall Goof Ring OD
LBR6	ROUND	5-5/16"	7-5/8"	5-3/4"	1/2"	7-1/8"	7-1/8"	9-1/4"
LBR6					1-1/2"	7-3/8"	7-1/2"	

* All dimensions are inches (millimeters) unless otherwise noted.

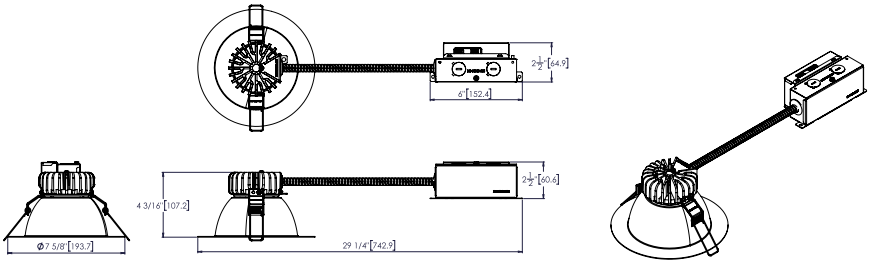

LBR6 SWW1 AL0x xx xxx MVOLT UGZ

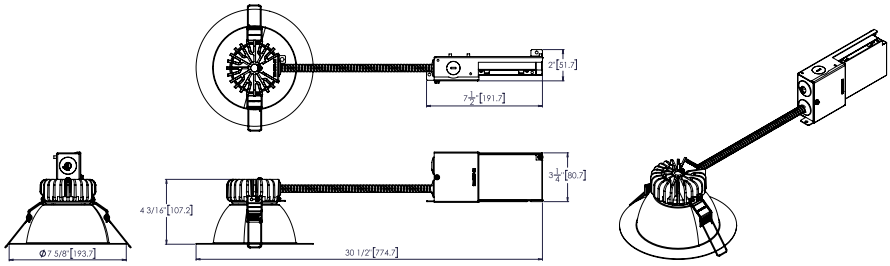

LBR6 SWW1 AL03 xx xxx MVOLT DALI

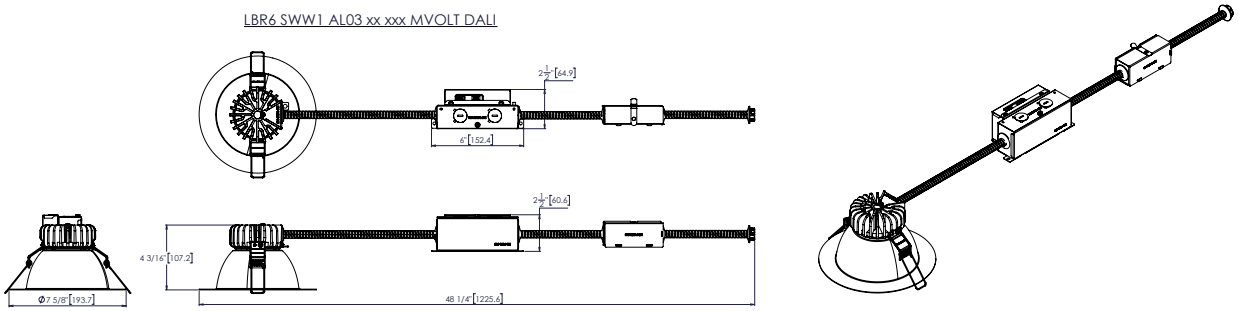

LBR6 SWW1 AL0x xx xxx MVOLT UGZ QDS

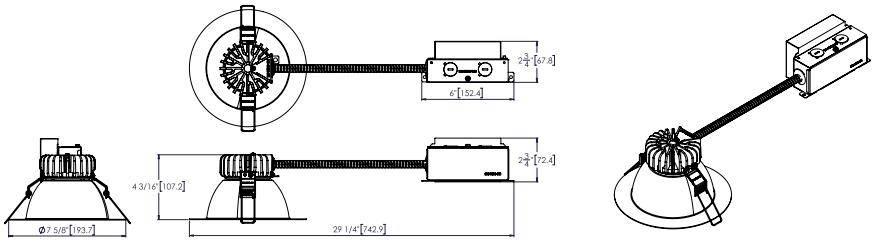

LBR6 SWW1 AL0x xx xxx MVOLT DALI

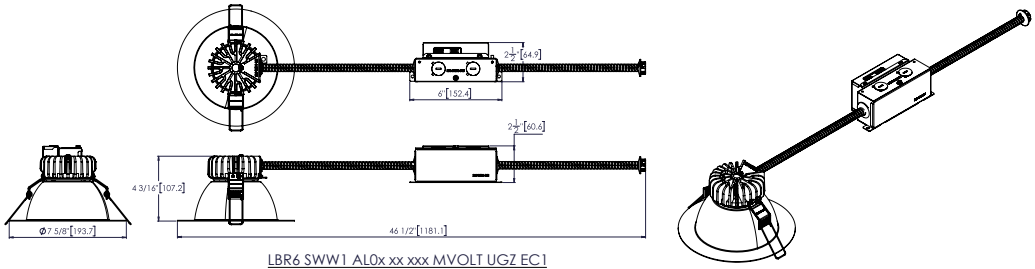

LBR6 SWW1 AL0x xx xxx MVOLT UGZ EC1

© 2020-2025 Acuity Brands Lighting, Inc. All rights reserved.

* All dimensions are inches (millimeters) unless otherwise noted.

LBR6PFWCP

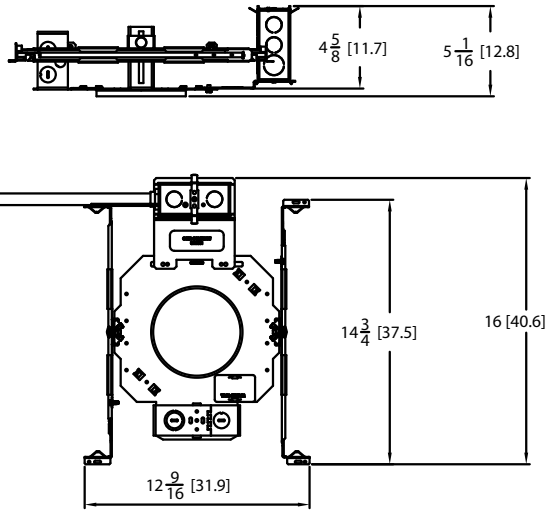

LBR6 SWW1 AL0x MV0LT UGZ CP

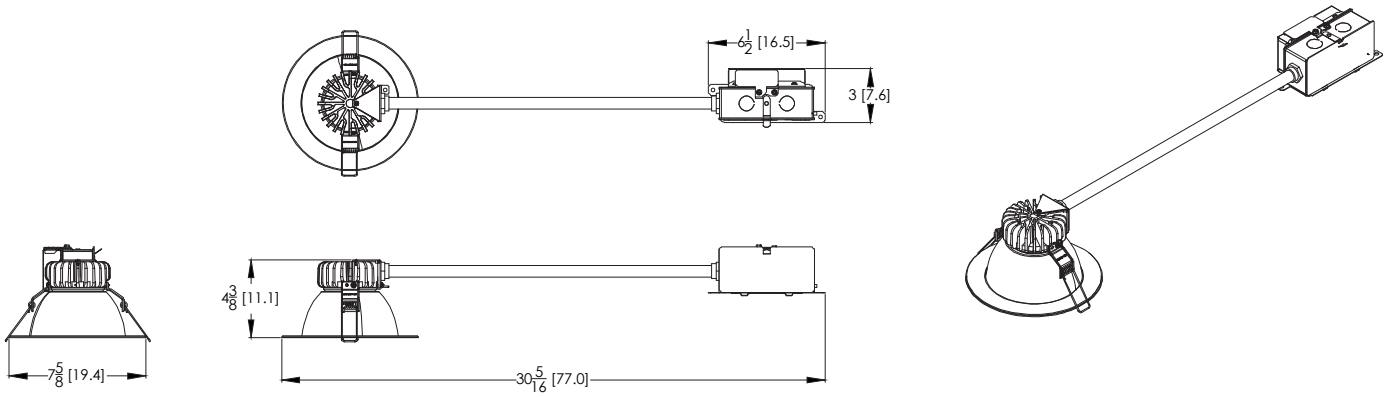

DOWNLIGHTING: 1 Acuity Way, Decatur, GA 30035 Phone: 1-800-705-SERV (7378) TechSupport-Lighting@Acuitybrands.com www.lithonia.com
© 2020-2025 Acuity Brands Lighting, Inc. All rights reserved. Rev. 08/15/25

LBR6

* All dimensions are inches (millimeters) unless otherwise noted.

LBR6 ALOx SWW1 xx xxx 347 UGZ

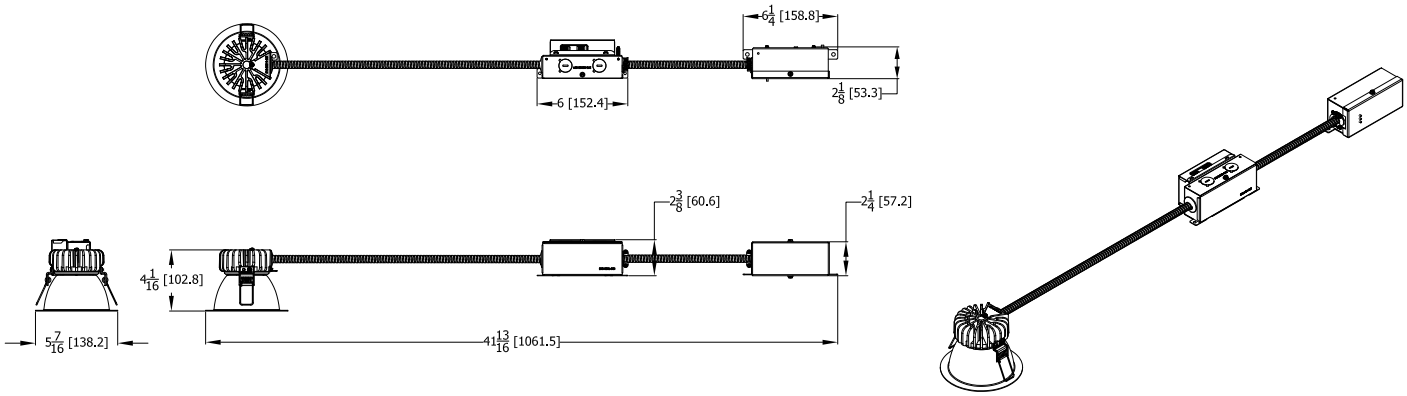

LBRx nLIGHT

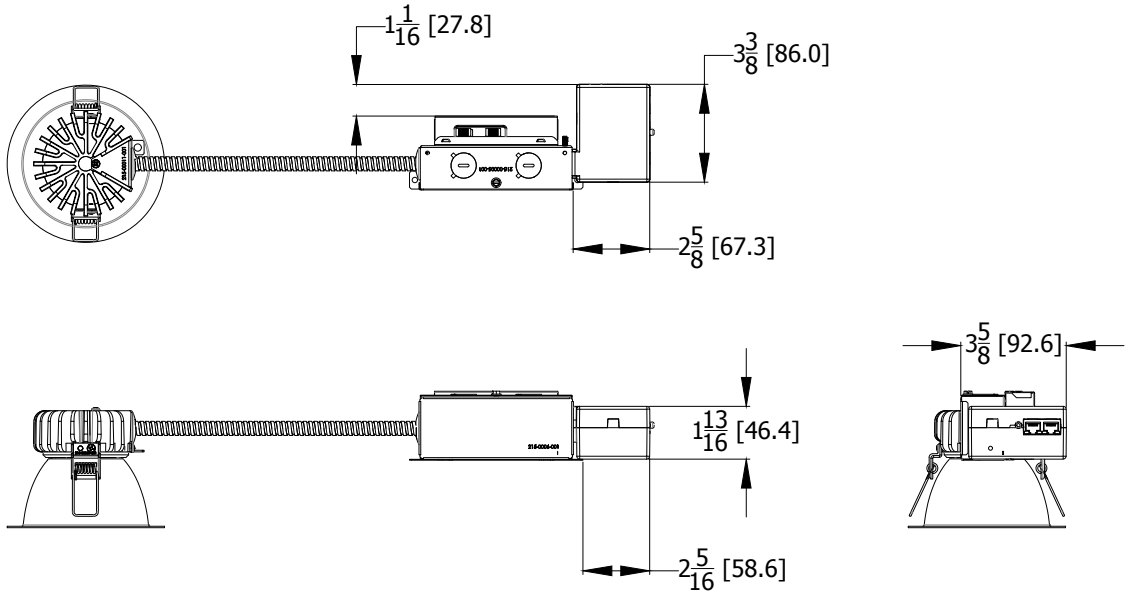

© 2020-2025 Acuity Brands Lighting, Inc. All rights reserved.

PHOTOMETRY

Distribution Curve	Distribution Data	Output Data	Illuminance Data at 30" Above Floor for a Single Luminaire

LBR6 SWW1 ALO2 AR LSS MWD MVOLT UGZ, Input Watts: 18.1, Delivered Lumens: 1970, LPW: 108.8, S/MH: 0.94, Test No: 20-518-03

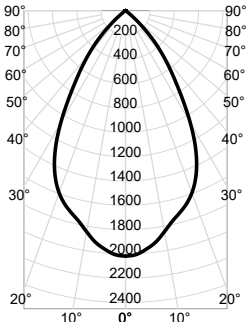

CP Summary

	0°
0°	2,018
5°	1,968
15°	1,721
25°	1,383
35°	724
45°	255
55°	9
65°	2
75°	1
85°	0
90°	0

Zonal Lumen Summary

Zone	Lumens	% Fixture
0° - 30°	1,292	66%
0° - 40°	1,751	89%
0° - 60°	1,967	100%
0° - 90°	1,970	100%
90° - 180°	0	0%
0° - 180°	1,970	100%

Cone of Light

Mounting Height	Initial FC Center Beam	Beam Diameter
6.0	56.1	7.1
8.0	31.5	9.5
10.0	20.2	11.9
12.0	14.0	14.3
14.0	10.3	16.7

Beam Angle: 61.5°
Field Angle: 92.7°

Luminance (cd/sq.m)

	Average Luminance
0°	142,862
45°	25,559
55°	1,074
65°	402
75°	246
85°	162

LBR6WW SWW1 ALO2 AR LSS WW, Input Watts: 18.7, Delivered Lumens: 1981, LPW: 105.9, S/MH: 0.67, Test No: 20-518-A1

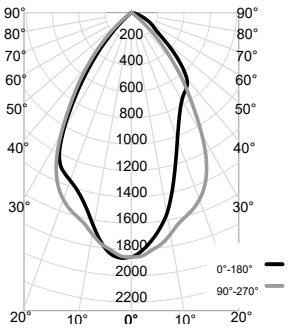

CP Summary

	0°	90°
0°	1,857	1,857
5°	1,740	1,810
15°	1,265	1,602
25°	864	1,349
35°	719	760
45°	502	280
55°	223	22
65°	126	10
75°	45	4
85°	9	1
90°	0	2

Zonal Lumen Summary

Zone	Lumens	% Fixture
0° - 30°	1,126	57%
0° - 40°	1,581	80%
0° - 60°	1,915	97%
0° - 90°	1,981	100%
90° - 180°	0	0%
0° - 180°	1,981	100%

Luminance (cd/sq.m)

	Average Luminance
0°	131,472
45°	50,247
55°	27,523
65°	21,156
75°	12,281
85°	7,229

LUMEN OUTPUT MULTIPLIERS - CCT			
3000K	3500K	4000K	5000K
0.98	1.0	1.01	1.03

LUMEN OUTPUT MULTIPLIERS - FINISH	
Clear Semi-spec (AR LSS)	1.0
Metallic Silver (MS)	0.84
White Painted (WR)	1.03
Black Painted (BR)	0.60

LUMEN OUTPUT MULTIPLIERS - CRI	
80	1.0
90	0.874

HOW TO ESTIMATE DELIVERED LUMENS IN EMERGENCY MODE

Use the formula below to estimate the delivered lumens in emergency mode

Delivered Lumens = 1.25 x P x LPW

P = Ouput power of emergency driver. P = 10W for PS1055CP

LPW = Lumen per watt rating of the luminaire. This information is available on the ABL luminaire spec sheet.
The LPW rating is also available at Designlight Consortium.

DOWNLIGHTING: 1 Acuity Way, Decatur, GA 30035 Phone: 1-800-705-SERV (7378) TechSupport-Lighting@Acuitybrands.com www.lithonia.com

© 2020-2025 Acuity Brands Lighting, Inc. All rights reserved. Rev. 08/15/25

DIMMER COMPATIBILITY

Not compatible with DALI or DMX dimmers. For specific compatible dimmers see below.

LINE VOLTAGE DIMMING:						
Type	**Forward Phase**	AL01 (500-1000lm)	AL02 (1000-2000lm)	AL03 (2000-3000lm)	AL04 (3000-5000lm)	Comment
MLV	Sensorswitch WPD	YES	YES	YES	YES	
MLV	Sensorswitch CMR PDT10 ADC VLP	YES	YES	YES	YES	
MLV	Synergy ISD 600LV	YES, 2x *	YES	YES	YES	* min 2 fixtures
INC	Synergy ISD 600 I	YES, 2x *	YES	YES	YES	* min 2 fixtures
MLV	Lutron Glyder GLV-600	YES	YES	YES	YES	
INC	Leviton SureSlide 6633	YES	YES	YES	YES	
MLV	Lutron Diva DVLV-600P	YES	YES	YES	YES	
MLV	Lutron Skylark SLV-600P	YES	YES	YES	YES	
INC	Lutron RadioRA 2 10ND	YES	YES	YES	YES	
MLV	Leviton SureSlide 6613-PLW	YES	YES	YES	YES	
INC	Lutron Diva DVCL-153P	YES	YES	YES	YES	
MLV	Leviton IPM06	YES, 2x *	YES	YES	YES	* min 2 fixtures
INC	**Leviton IPI06**	YES, 2x *	YES	YES	YES	* min 2 fixtures
INC	**Control4 C4-FPD 120**	YES	YES	YES	YES	
Type	Reverse Phase Dimmer Bank	AL01 (500-1000lm)	AL02 (1000-2000lm)	AL03 (2000-3000lm)	AL04 (3000-5000lm)	
ELV	Lutron Nova T NTELV-600	YES	YES	YES	YES	
ELV	Lutron Diva DVELV 600P	YES	YES	YES	YES	
ELV	Lutron Maestro MAELV 600	YES	YES	YES	YES	
ELV	Leviton Vizia VPE06-1LX	YES	YES	YES	YES	
ELV	**Leviton Illumatech IPE04**	YES	YES	YES	YES	
ELV	**Control4 C4-APD 120 REVERSE PHASE**	YES	YES	YES	YES	
Type	Miscellaneous Dimmers	AL01 (500-1000lm)	AL02 (1000-2000lm)	AL03 (2000-3000lm)	AL04 (3000-5000lm)	
PHA	Lutron RadioRA2 RRD-6NA	YES	YES	YES	YES	
PHA	**Lutron Maestro PRO LED+ RRD-PRO**	YES	YES	YES	YES	
Type	Control Systems	AL01 (500-1000lm)	AL02 (1000-2000lm)	AL03 (2000-3000lm)	AL04 (3000-5000lm)	
MLV	Lutron LP-RPM-4U	YES	YES	YES	YES	
PHA	Lutron LP-RPM-4A	YES	YES	YES	YES	
MLV	Lutron GRAPHIC EYE QSGRJ-3P	YES	YES	YES	YES	
PHA	Lutron PA Power Module PHPM-PA-120	YES	YES	YES	YES	
ELV	Lutron nLight nSP5PCD ELV	YES	YES	YES	YES	

DIMMER COMPATIBILITY

Not compatible with DALI or DMX dimmers. For specific compatible dimmers see below.

0-10V DIMMING:							
Manufacturer	System Type	Description	P/N	AL01 (500-1000lm)	AL02 (1000-2000lm)	AL03 (2000-3000lm)	AL04 (3000-5000lm)
ACUITY	Wall Box	sensorswitch, dimming switch with multi-way option	SPODMRA	YES	YES	YES	YES
ACUITY	Wall Box	sensorswitch, wall switch sensor, occupancy controlled dimming	WSX D WH	YES	YES	YES	YES
ACUITY	Control System	nLight	nPP16D	YES	YES	YES	YES
ACUITY	Control System	nLight	nPS 80 EZ	YES	YES	YES	YES
ACUITY	Control System	nLight Air	rPP20 D	YES	YES	YES	YES
Lutron	Other	0-10V (sink or source) PowPak wireless dimming module	RMJ-5T-DV-B	YES	YES	YES	YES
Wattstopper	Control System	Digital single relay room controller (0-10V)	LMRC-211	YES	YES	YES	YES
Crestron	Control System	DIN Rail 0-10V fluorescent dimmer, 4 feeds, 4 channels (Green Light System)	DIN-4DIMFLV4	YES	YES	YES	YES
Lutron	Other	Grafik Eye 0-10V adapter	GRX-TVI	YES	YES	YES	YES
Leviton	Wall Box	Illumatech 0-10V	IP710-DLX	YES	YES	YES	YES
Lutron	Control System	Mounted in the Homeworks QS panel - 0-10V dimmer (sink or source)	GRX-TVM2	YES	YES	YES	YES
Lutron	Wall Box	Nova 0-10V wallbox dimmer (use with PP-120-H line voltage relay)	NTFTV	YES	YES	YES	YES
Lutron	Wall Box	Nova 0-10V wallbox dimmer (use with PP-120-H line voltage relay)	NTSTV-DV	YES	YES	YES	YES
Lutron	Wall Box	Nova T	NFTV	YES	YES	YES	YES
Leviton	Wall Box	Renior II 0-10V	AWSMG-7DW	YES	YES	YES	YES

© 2020-2025 Acuity Brands Lighting, Inc. All rights reserved.

ADDITIONAL DATA

JOT
JUST ONE TOUCH

The Sensor Switch JOT enabled solution offers a wireless, app-free approach to single room lighting control. JOT enabled products use Bluetooth® Low Energy (BLE) technology to enable wireless dimming and switching.

Diagram

LBR6 Series

Sensor Switch
WSXA JOT

1. **Power:** Install JOT enabled fixtures and controls as instructed.
2. **Pair:** Insert the pairing tool into the pinhole on the wall switch; press and hold any button for 6 seconds.
3. **Play:** Once paired, each fixture will individually dim down to 10% brightness. All products will be fully functional.

COMPATIBLE 0-10V WALL-MOUNT DIMMERS		
MANUFACTURER	PART NO.	POWER BOOSTER AVAILABLE
Lutron®	Diva® DVTV	
	Diva® DVSCTV	
	Nova T® NTFTV	
	Nova® NFTV	
Leviton®	AWSMT-7DW	CN100
	AWSMG-7DW	PE300
	AMRMG-7DW	
	Leviton Centura Fluorescent Control System	
	IllumaTech® IP7 Series	
Synergy®	ISD BC	RDMFC
	SLD LPCS	
	Digital Equinox (DEQ BC)	
Douglas Lighting Controls	WPC-5721	
Entertainment Technology	Tap Glide TG600FAM120 (120V)	
	Tap Glide Heatsink TGH1500FAM120 (120V)	
	Oasis 0A2000FAMU	
Honeywell	EL7315A1019	EL7305A1010 (optional)
	EL7315A1009	
HUNT Dimming	Preset slide: PS-010-IV and PS-010-WH	
	Preset slide: PS-010-3W-IV and PS-010-3W-WH	
	Preset slide, controls FD-010: PS-IFC-010-IV and PS-IFC-010-WH-120/277V	
	Preset slide, controls FD-010: PS-IFC-010-3W-IV and PS-IFC-010-3W-WH-120/277V	
	Remote mounted unit: FD-010	
Lehigh Electronic Products	Solitaire	PBX
PDM Electrical Products	WPC-5721	
Starfield Controls	TR61 with DALI interface port	RT03 DALInet Router
WattStopper®	LS-4 used with LCD-101 and LCD-103	

DOWNLIGHTING: 1 Acuity Way, Decatur, GA 30035 Phone: 1-800-705-SERV (7378) TechSupport-Lighting@Acuitybrands.com www.lithonia.com

© 2020-2025 Acuity Brands Lighting, Inc. All rights reserved. Rev. 08/15/25

EXAMPLE
Group Fixture Control*
*Appiication diagram applies for fixtures with eldoLED drivers only.

nPS 80 EZ Dimming/Control Pack (qty: 2 required)
nPODM 2P DX Dual On/Off/Dim Push-Button WallPod
nCM ADCX Daylight Sensor with Automatic Dimming Control
nCM PDT 9 Dual Technology Occupancy Sensor

Description: This design provides a dual on/off/dim wall station that enables manual control of the fixtures in Row A and Row B separately. Additionally, a daylight harvesting sensor is provided so the lights in Row B can be configured to dim automatically when daylight is available. An occupancy sensor turns off all lights when the space is vacant.

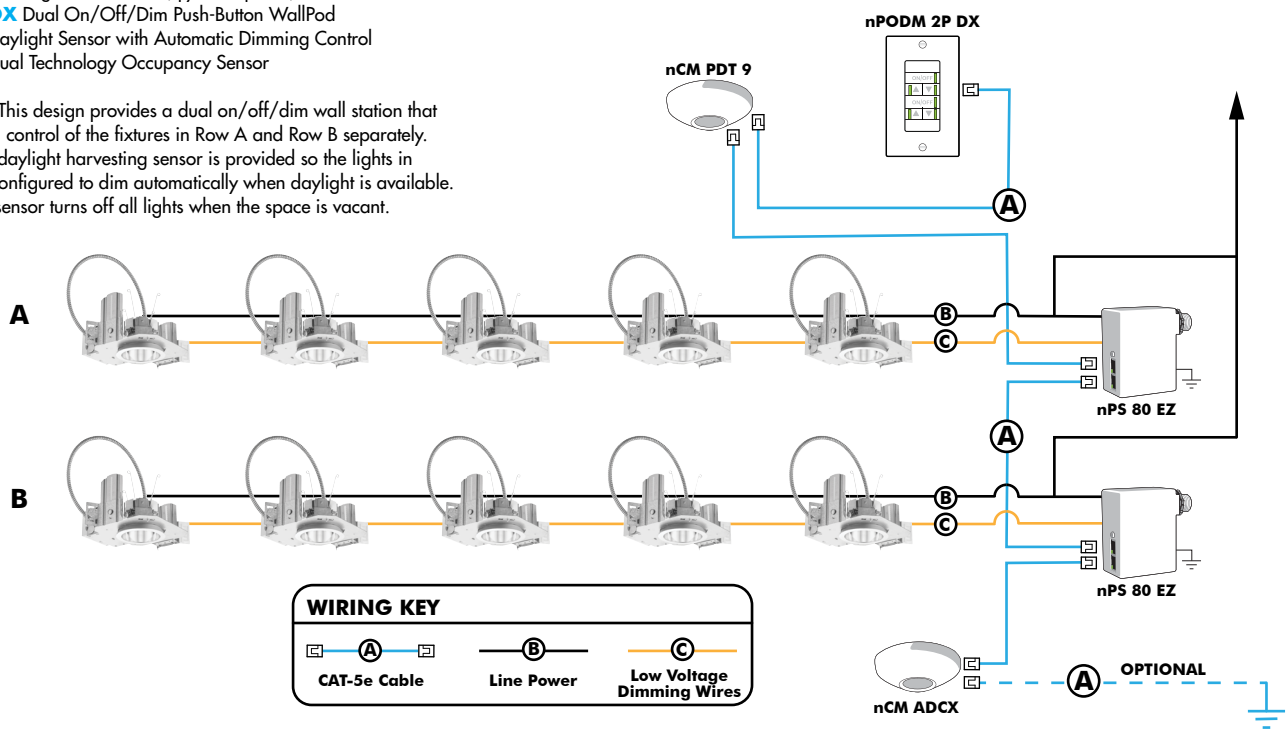

Choose Wall Controls

nLight offers multiple styles of wall controls - each with varying features and user experience.

Push-Button Wallpod
Traditional tactile buttons and LED user feedback

Graphic Wallpod
Full color touch screen provides a sophisticated look and feel

nLight® Wired Controls Accessories:			
Order as separate catalog number. Visit www.acuitybrands.com/products/controls/nlight for complete listing of nLight controls.			
WallPod Stations	**Model number**	**Occupancy sensors**	**Model Number**
On/Off	nPODM (Color)	Small motion 360°, ceiling (PIR/dual Tech)	nCM 9 / nCM PDT 9
On/Off & Raise/Lower	nPOD DX (Color)	Large motion 360°, ceiling (PIR/dual tech)	nCM 10 / nCM PDT 10
Graphic Touchscreen	nPOD GFX (Color)	Wide View (PIR/dual tech)	nWV 16 / nWV PDT 16
Photocell controls	**Model Number**	Wall Switch w/ Raise/Lower (PIR/dual tech)	nWSX LV DX / nWSX PDT LV DX
Dimming	nCM ADCX	**Cat-5 cables (plenum rated)**	**Model Number**
		10', CAT5 10FT	CAT5 10FT J1
		15, CAT5 15FT	CAT5 15FT J1

DOWNLIGHTING: 1 Acuity Way, Decatur, GA 30035 Phone: 1-800-705-SERV (7378) TechSupport-Lighting@Acuitybrands.com www.lithonia.com
© 2020-2025 Acuity Brands Lighting, Inc. All rights reserved.
Rev. 08/15/25

nLight® AIR Control Accessories:
Order as separate catalog number. Visit www.acuitybrands.com/products/controls/nlightair.

Wall switches	Model number
On/Off single pole	rPODB [color]
On/Off two pole	rPODB 2P [color]
On/Off & raise/lower single pole	rPODB DX [color]
On/Off & raise/lower two pole	rPODB 2P DX [color]
On/Off & raise/lower single pole	rPODBZ DX WH[1]

Notes

1 Can only be ordered with the RES7Z zone control sensor version.

UL924 Sequence of Operation

The below information applies to all nLight AIR devices with an EM option.

- EM devices will remain at their high-end trim and ignore wireless lighting control commands, unless a normal-power-sensed (NPS) broadcast is received at least every 8 seconds.
- Using the CL**AIR**ITY+ mobile app, EM devices must be associated with a group that includes a normal power sensing device to receive NPS broadcasts.
- Only non-emergency rPP20, rLSXR, rSBOR, rSDGR, and nLight AIR luminaires with version 3.4 or later firmware can provide normal power sensing for EM devices. See specification sheets for control devices and luminaires for more information on options that support normal power sensing.

nLight AIR

nLight AIR is the ideal solution for retrofit or new construction spaces where adding communication is cost prohibitive. The integrated nLight AIR rPP20 Power Pack is part of each Lithonia LDN Luminaire. These individually addressable controls offer the ultimate in flexibility during initial setup and for space repurposing.

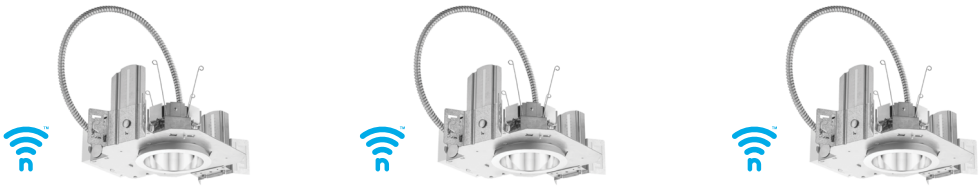

Simple as 1,2,3

1. Install the nLight® AIR fixtures with embedded smart sensor
2. Install the wireless battery-powered wall switch
3. With CL**AIR**ITY app, pair the fixtures with the wall switch and if desired, customize the sensor settings for the desired outcome

nLight AIR rPODB 2P DX Mobile Device

DOWNLIGHTING: 1 Acuity Way, Decatur, GA 30035 Phone: 1-800-705-SERV (7378) TechSupport-Lighting@Acuitybrands.com www.lithonia.com
© 2020-2025 Acuity Brands Lighting, Inc. All rights reserved. Rev. 08/15/25

LITHONIA LIGHTING®

Catalog Number	
Notes	
Type	

LBR6

6" Open and Wallwash LED Retrofit/Remodel Downlight

Retrofit | Remodel

Open Trim

Wallwash Trim

FEATURES & SPECIFICATIONS

INTENDED USE — Typical applications include corridors, lobbies, conference rooms and private offices.

CONSTRUCTION — Retrofit, remodel, and new construction mounting types. See table for compatible ceiling openings and thickness range.

Optional goof rings available for additional overlap trim coverage.

1/2"-1-1/2" ceiling thickness

25° ambient temperature

IC rated up to 1000lm

OPTICS — LEDs are binned to a 3-step Mac Adam Ellipse. 55° cutoff

New construction frame accessories approved for 8 (4 in/4 out) No. 12 AWG conductors rated for 90°C through wiring.

80CRI standard (90CRI optional)

UGR — UGR is zero for fixtures aimed at nadir with a cut-off equal to or less than 60deg, per CIE 117-1996 Discomfort Glare in Interior Lighting. UGR FAQ

ELECTRICAL — Adjustable lumen output with four module options. Fixed lumen options also available.

MVOLT 120/277V 50/60Hz driver (0-10V & 120V Phase Dimming to 10% or 1% min dimming level)

FCC CFR Title 47 Part 15 Class A for 277V. FCC CFR Title 47 Part 15 Class B for 120V.

LUMEN MAINTENANCE — L80 at 60,000 hours

LISTINGS — Certified to US and Canadian safety standards. Damp location standard (Wet Location (WL) optional, requires covered ceiling). TAA compliant. UFC (3-530-01) specification compliant for power factor and THD. GSA P100 6.2.4 compliant for power quality at full output; compliant up to 2000lm at fully dimmed output. Drivers are ROHS compliant

Title 24 compliant (90CRI, up to 1000lm).

WARRANTY — 5-year limited warranty. This is the only warranty provided and no other statements in this specification sheet create any warranty of any kind. All other express and implied warranties are disclaimed. Complete warranty terms located at: www.acuitybrands.com/support/warranty/terms-and-conditions

Note: Actual performance may differ as a result of end-user environment and application.
All values are design or typical values, measured under laboratory conditions at 25 °C.
Specifications subject to change without notice.

Performance Data

LBR6 AR LSS MWD		80CRI							
Lumen Output	Wattage	30K/80CRI		35K/80CRI		40K/80CRI		50K/80CRI	
		Delivered Lumens	LPW	Delivered Lumens	LPW	Delivered Lumens	LPW	Delivered Lumens	LPW
AL01 (500LM)	6	571	99	585	101	599	103	617	105
AL01 (750LM)	9	905	102	926	103	948	105	977	108
AL01 (1000LM)	13	1270	98	1300	100	1330	102	1372	104
AL02 (1000LM)	13	1346	108	1378	110	1410	112	1454	115
AL02 (1500LM)	19	1965	105	2011	107	2059	109	2123	111
AL02 (2000LM)	25	2476	100	2533	101	2593	103	2674	106
AL03 (2000LM)	25	2547	103	2606	105	2668	107	2751	109
AL03 (2500LM)	32	3075	98	3146	100	3221	101	3321	104
AL03 (3000LM)	38	3492	93	3573	95	3658	96	3771	99
AL04 (4000LM)	39	4180	107	4265	109	4350	112	4393	113
AL04 (4500LM)	44	4613	105	4707	107	4801	109	4848	110
AL04 (5000LM)	49	5017	102	5119	104	5221	107	5273	108

LBR6 MS MWD		80CRI							
Lumen Output	Wattage	30K/80CRI		35K/80CRI		40K/80CRI		50K/80CRI	
		Delivered Lumens	LPW	Delivered Lumens	LPW	Delivered Lumens	LPW	Delivered Lumens	LPW
AL01 (500LM)	6	480	99	584	101	597	102	616	105
AL01 (750LM)	9	760	102	924	103	946	105	975	108
AL01 (1000LM)	13	1067	98	1297	100	1328	102	1369	104
AL02 (1000LM)	13	1131	108	1375	110	1408	112	1451	115
AL02 (1500LM)	19	1651	105	2007	106	2055	108	2118	111
AL02 (2000LM)	25	2079	99	2528	101	2588	103	2668	105
AL03 (2000LM)	25	2139	103	2601	104	2663	106	2745	109
AL03 (2500LM)	32	2583	98	3140	99	3214	101	3314	103
AL03 (3000LM)	38	2933	93	3566	94	3651	96	3764	98
AL04 (4000LM)	39	3511	90	3583	92	3654	94	3690	95
AL04 (4500LM)	44	3875	88	3954	90	4033	92	4072	93
AL04 (5000LM)	49	4214	86	4300	88	4386	90	4429	90

- Tested in accordance with IESNA LM-79-08. u8226
- Tested to current IES and NEMA standards under stabilized laboratory conditions.
- CRI: 80 typical

design select

Items marked by a shaded background qualify for the Design Select program and ship in 15 days or less. To learn more about Design Select, visit www.acuitybrands.com/designselect.
*See ordering tree for details

battery pack

Design Select options indicated by this color background.

Module ordering

ORDERING INFORMATION Lead times will vary depending on options selected. Consult with your sales representative.

Example: LBR6 AL02 SWW1 AR LSS MWD MVOLT UGZ 90CRI

Series		Lumens ‡				Color temperature ‡		Reflector Color		Reflector Flange ‡		Reflector Finish	
		Adjustable Lumen Output		**Fixed Lumen Output**		**Switchable CCT**							
LBR6	6" Retrofit	AL01	500/750/1000lm	05LM	500lm	SWW1	3000K-3500K-4000K-5000K	AR	Clear	(blank)	Self-flanged	LSS	Semi-specular
LBR6WW ‡	6" Retrofit Wallwash	AL02	1000/1500/2000lm	07LM	750lm	**Fixed CCT**		BR ‡	Black painted	TRW	White painted flange		
		AL03	2000/2500/3000lm	10LM	1000lm	27K	2700K	MS ‡	Metallic Silver	TRBL	Black painted flange		
		AL04	4000/4500/5000lm	15LM	1500lm	30K	3000K	WR ‡	White painted	FCPC	Custom painted flange only		
				20LM	2000lm	35K	3500K	TCPC ‡	Custom painted trim	FRALTBD	RAL painted flange only		
				25LM	2500lm	40K	4000K	TRALTBD ‡	RAL painted trim				
				30LM	3000lm	50K	5000K						
				40LM	4000lm								
				45LM	4500lm								
				50LM	5000lm								

Distribution		Voltage	Driver		Emergency ‡		Control Input ‡		Options	
MWD	Medium wide (1.0 s/mh)	MVOLT	UGZ	Universal dimming to 10% 0-10V; line voltage dimming (120V)	(blank)	No Emergency Needed	(blank)	No Control Input Needed	90CRI	High CRI (90+)
WD	Wide (1.2s/mh)	120	UGZ1	Universal dimming to 1% 0-10V; line voltage dimming (120V)	ELR	Battery pack (10W constant power) Non-T20 Compliant remote test switch	JOT	Wireless room control with "Just One Touch" pairing	AT ‡	Airtight
WW ‡	Wallwash	277	DALI ‡	DALI dimming to 1%	ETS	Iota Emergency Transfer System	NLIGHT	Embedded wired controls from nLight	EC1 ‡	Extended Conduit (18")
		347	D1	Minimum dimming 1% driver for use with JOT	E10WCP	Battery pack (10W constant power) T20 Compliant integral test switch	NLIGHTER	Embedded wired controls from nLight with UL924 listed emergency operation	EC6 ‡	Extended Conduit (6ft)
					E10WCPR	Battery pack (10W constant power) T20 Compliant remote test switch	NLTAIR2	nLight® Air enabled	WL ‡	Wet Location (IP55)
					E10WRSTAR	Emergency battery pack, 10W with remote test switch and Iota STAR technology	NLTAIREM2	nLight® AIR Dimming Pack Wireless Controls. UL924 Emergency Operation, via power interrupt detection.	QDS ‡	Quick disconnect plugs
									CP ‡	Chicago Plenum

NOTE: ‡ indicates option value has ordering restrictions. Please reference the Option Value Ordering Restictions chart below.

‡ Option Value Ordering Restrictions

Options	Restriction
Adjustable Lumens/CCT	Adjustable Lumen Output and Switchable CCT must be specified together (for Example: AL01 SWW1)
Fixed Lumens/CCT	Fixed Lumen Output and Fixed CCT must be specified together (for Example: 10LM 30K)
WW	Not available with WL, EL, E10WCP.
MS, WR, BR	Not available with LSS reflector finish
WR	Not available with TRW
BR	Not available with TRBL
TRALTBD, FRALTBD	RALTBD for pricing only. Replace with applicable RAL number and finish when ready to order. See the RAL BROCHURE for available color options. Not available with TCPC or FCPC.
TCPC, FCPC	CPC options for pricing only. Custom color chip needs to be sent in to your Customer Resolution specialist before order can be processed. Click HERE for more details. Not available with TRAL or FRAL.
TRW, TRBL	Available with MS and AR reflectors only.
LSS	Not available with BR or WR or MS
347V	Not available with CP, QDS, ELR, E10WCP, E10WCPR, NLIGHT, NLIGHTER, NLTAIR2, or NLTAIREM2
DALI	Not available with fixed lumens or CCT. Max 4500 lumens.
E10WCPR	Not available with EC1, EC6, AT, QDS, CP, 347V, NLIGHTER, NLTAIREM2, WL, AL03 & AL04 w/DALI, OR 2000-4500 lumens w/JOT.
E10WCP	Not available with WW, EC1, EC6, AT, QDS, CP, 347V, NLIGHTER, NLTAIREM2, WL, AL03 & AL04 w/DALI, OR 2000-4500 lumens w/JOT.
E10WSTAR	Not available with wet location, EC1, EC6, QDS, CP, 347V, NLIGHTER, NLTAIREM2, AL03 & AL04 w/DALI, OR 2000-4500 lumens w/JOT. Top access installation or 17.5" plenum clearance required for roomside installation. Not available with integral test switch
ELR	Not available EC1, EC6, QDS, CP, 347V, NLIGHTER, NLTAIREM2, AL03 & AL04 w/DALI, OR 2000-4500 lumens w/JOT.
ETS	Not available with, QDS, ELR, E10WCP, E10WCPR, 347V, JOT, NLIGHT, NLIGHTER, NLTAIR2, NLTAIREM2, DALI, or D1 driver
JOT	Only available with D1 driver. Not availabe with CP, NLIGHT, NLIGHTER, NLTAIR2, NLTAIREM2, UGZ, or DALI drivers. Max 4500 lumens. Fixed lumens and CCT only. Not available with 2000-4500lm in conjunction with emergency batterypacks.
NLIGHT	Must specify UGZ1. Not available with CP, QDS, JOT, ETS, UGZ, DALI, or D1 drivers. Not available with 347V.
NLIGHTER	Must specify UGZ1. Not available with CP, QDS, ELR, E10WCP, E10WCPR, DALI, or D1 drivers. Not available with 347V.
NLTAIR2	Must specify UGZ1. Not available with CP, QDS, JOT, ETS, UGZ, DALI, or D1 drivers. See UL 924 Sequence of Operation table. Non-emergency luminaires with this option can be used as a normal power sensing device for nLight AIR devices and luminaires with EM emergency options. Not available with 347V.
NLTAIREM2	Must specify UGZ1. Not available with CP, QDS, JOT, ETS, ELR, E10WCP, E10WCPR, DALI, D1, OR D10 drivers. See UL 924 Sequence of Operation table.
WL	Not available with WW, All CP is wet location, except WW (Damp). IP55 rated. Not available with E10WCP
QDS	Must be specified for use with LBR_PFWQDS. Not Available with CP, emergency options, or 347V.
EC1, EC6	Not Available with CP,QDS, ELR, E10WCP, or E10WCPR.
AT	Standard for CP and IP55, not availabe with WW. Not available with E10WCP
CP	Not available with, QDS, EC1, EC6, ELR, E10WCPR, 347V, JOT, NLTAIR2, NLTAIREM2, D1 drivers. For new construction applications, must be specified with LBR_PFWCP.

© 2020-2025 Acuity Brands Lighting, Inc. All rights reserved. Rev. 08/15/25

Accessories: *Order as separate catalog number. Shipped separately.*	
LBRGR78 **	Goof ring 7-3/4" to 8-3/4" for LBR6 (** specify BR,WR)
LBRCPGR78 **	Chicago Plenum Goof ring 7-3/4" to 8-3/4" for LBR6 (** specify BR, WR)
LBR06 AR LSS TRIM	6" clear, semi-specular reflector
LBR06 ** TRIM	6" reflector (** specify MS, WR, BR)
LBRW6 AR LSS TRIM	6" clear, semi-specular wallwash
LBRW6 ** TRIM	6" wallwash (** specify MS, WR, BR)
LBR46810HB FPAN U	Mounting plate 4"-10" unit pack
LBR46810HB FPAN J10	Mounting plate 4"-10" 10-pack
LBR SDT 347V 75W ASM	Field installed 347V Step-down transformer
SCA6	Sloped Ceiling Adapter. Degree of slope must be specified (5D, 10D, 15D, 20D, 25D, 30D). Ex: SCA6 10D.

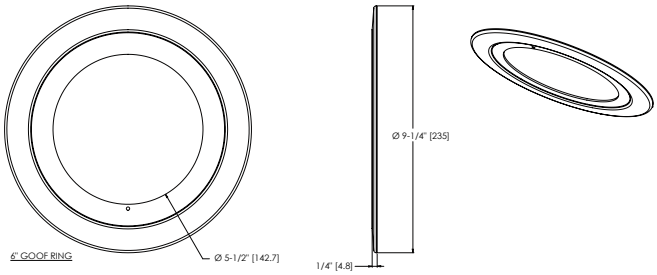

Module	Mounting Frame Accessory	Compatible Fixture Options
LBR6	LBR6PF	QDS, EC1, EC6,
	LBR6PFW	Base fixture only
	LBR6PFW EM	ELR, E10WCPR, E10WCP, E10WRSTAR
	LBR6PFWQDS	QDS fixture only
LBR6WW	LBR6PF	QDS, EC1, EC6,
	LBR6PFW	Base fixture only
	LBR6PFW EM	ELR, E10WCPR, E10WRSTAR
	LBR6PFWQDS	QDS fixture only

Emergency Battery Pack Options - Field Installable

Battery Model Number	Wattage	Runtime (Minutes)	Lumen Output* @ 120 Lumens/Watt	Other
ILB CP07 2H A	7W	120	840	Storm Shelter / 2 Hour Runtime
ILB CP10 A	10W	90	1200	
ILBLP CP10 HE SD A+	10W	90	1200	Title 20, Self Diagnostic
ILBLP CP15 HE SD A+	15W	90	1800	Title 20, Self Diagnostic
ILB CP20 HE A	20W	90	2400	Title 20
ILB CP20 HE SD A	20W	90	2400	Title 20, Self Diagnostic
ILBHI CP10 HE SD A+	10W	90	1200	347-480V AC Input, Title 20, Self Diagnostic
ILBHI CP15 HE SD A+	15W	90	1800	347-480V AC Input, Title 20, Self Diagnostic

All the above are UL Listed products that are certified for field install external/remote to the fixture.
*Minimum delivered lumen output to assist in product selection for increased fixture mounting height.
The CP10 delivered emergency illumination outperforms legacy 1400 lumen fluorescent emergency ballast.
Please contact us at techsupport@iotaengineering.com for any Emergency Battery related questions.

© 2020-2025 Acuity Brands Lighting, Inc. All rights reserved. Rev. 08/15/25

LBR6

PLENUM DEPTH TABLE				
Aperture Size/Output	Plenum Depth*	IC	Non-IC	Non-IC Marked Spacing
LBR6 500-1000 Lumen	3.69	X		
LBR6 1000-2000 Lumen	3.69		X	
LBR6 2000-3000 Lumen	-			24x24x9
LBR6 4000-5000 Lumen	-			24x24x9

*Above unfinished 1/2" ceiling plane

CEILING COVERAGE TABLE								
Series		Aperture	Trim Flange OD	Min ceiling opening	Ceiling Thickness	Max ceiling opening	Max Ceiling Opening with Goof Ring	Overall Goof Ring OD
LBR6	ROUND	5-5/16"	7-5/8"	5-3/4"	1/2"	7-1/8"	7-1/8"	9-1/4"
LBR6					1-1/2"	7-3/8"	7-1/2"	

* All dimensions are inches (millimeters) unless otherwise noted.

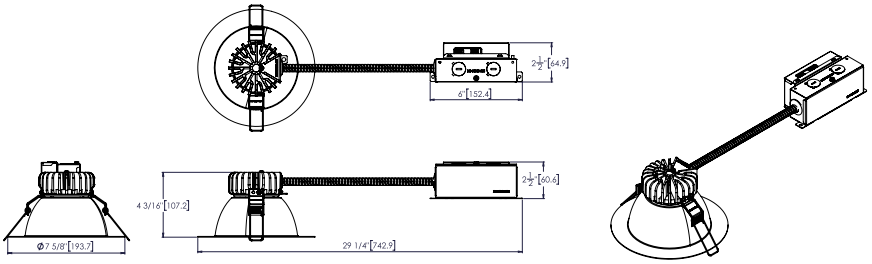

LBR6 SWW1 AL0x xx xxx MVOLT UGZ

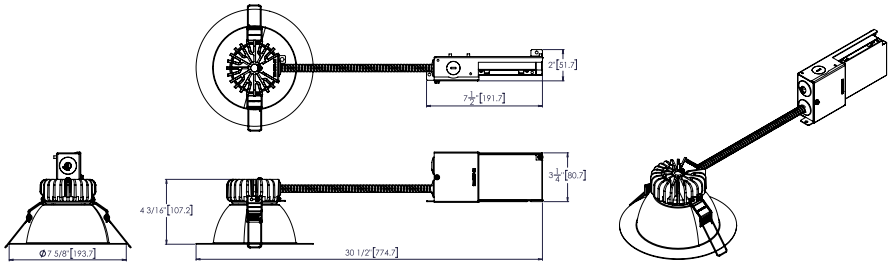

LBR6 SWW1 AL03 xx xxx MVOLT DALI

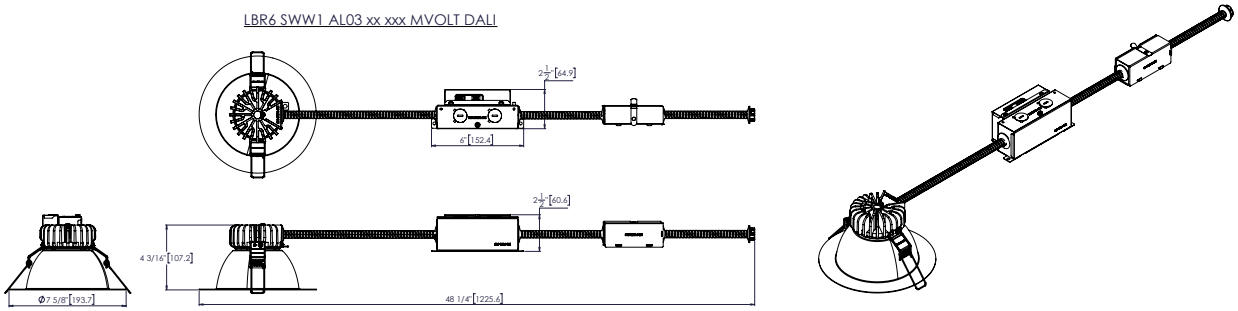

LBR6 SWW1 AL0x xx xxx MVOLT UGZ QDS

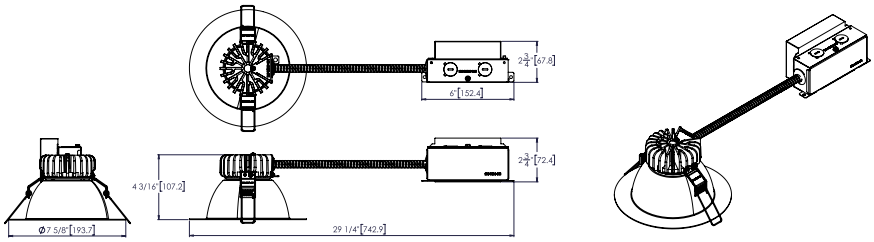

LBR6 SWW1 AL0x xx xxx MVOLT DALI

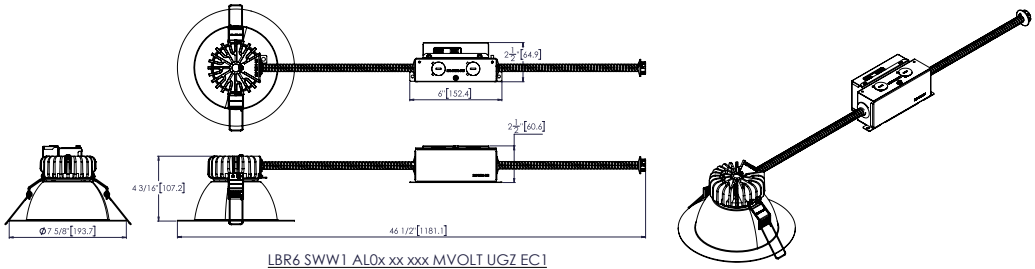

LBR6 SWW1 AL0x xx xxx MVOLT UGZ EC1

© 2020-2025 Acuity Brands Lighting, Inc. All rights reserved.

* All dimensions are inches (millimeters) unless otherwise noted.

LBR6PFWCP

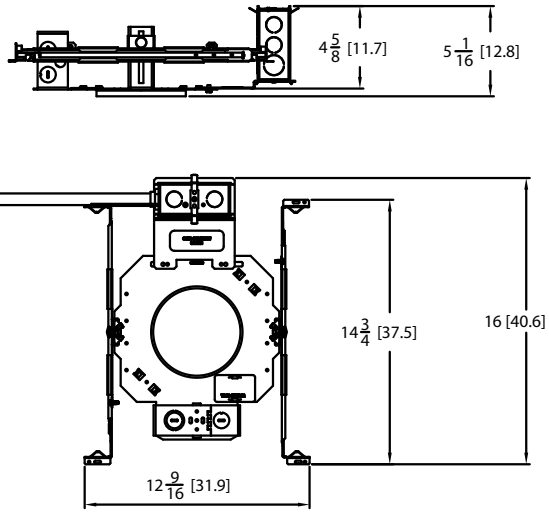

LBR6 SWW1 AL0x MV0LT UGZ CP

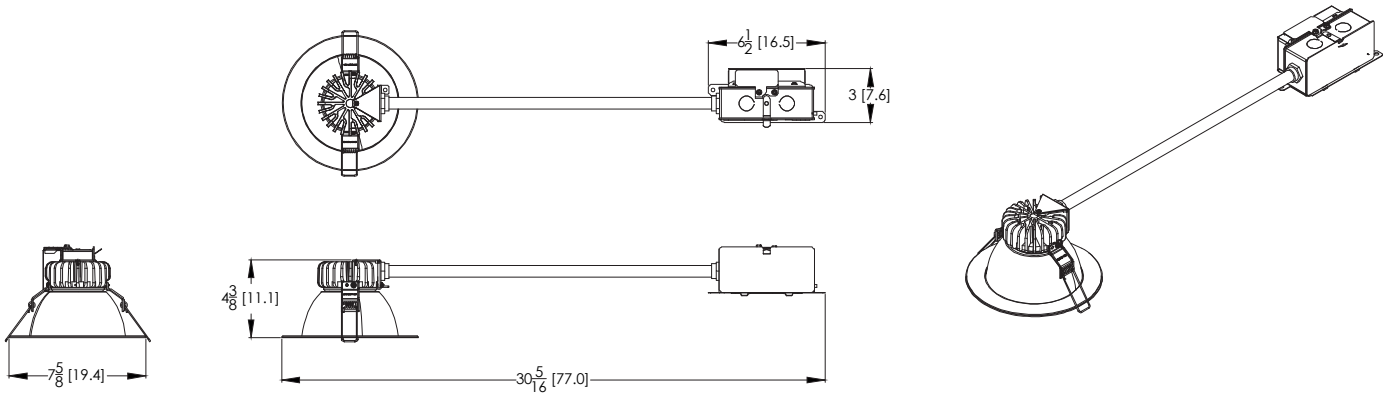

DOWNLIGHTING: 1 Acuity Way, Decatur, GA 30035 Phone: 1-800-705-SERV (7378) TechSupport-Lighting@Acuitybrands.com www.lithonia.com
© 2020-2025 Acuity Brands Lighting, Inc. All rights reserved. Rev. 08/15/25

LBR6

* All dimensions are inches (millimeters) unless otherwise noted.

LBR6 ALOx SWW1 xx xxx 347 UGZ

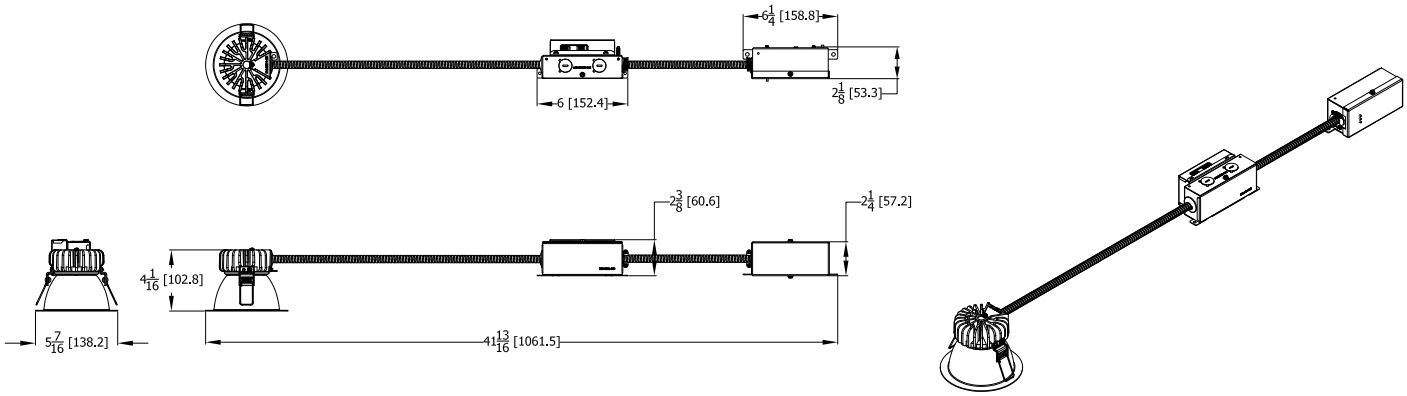

LBRx nLIGHT

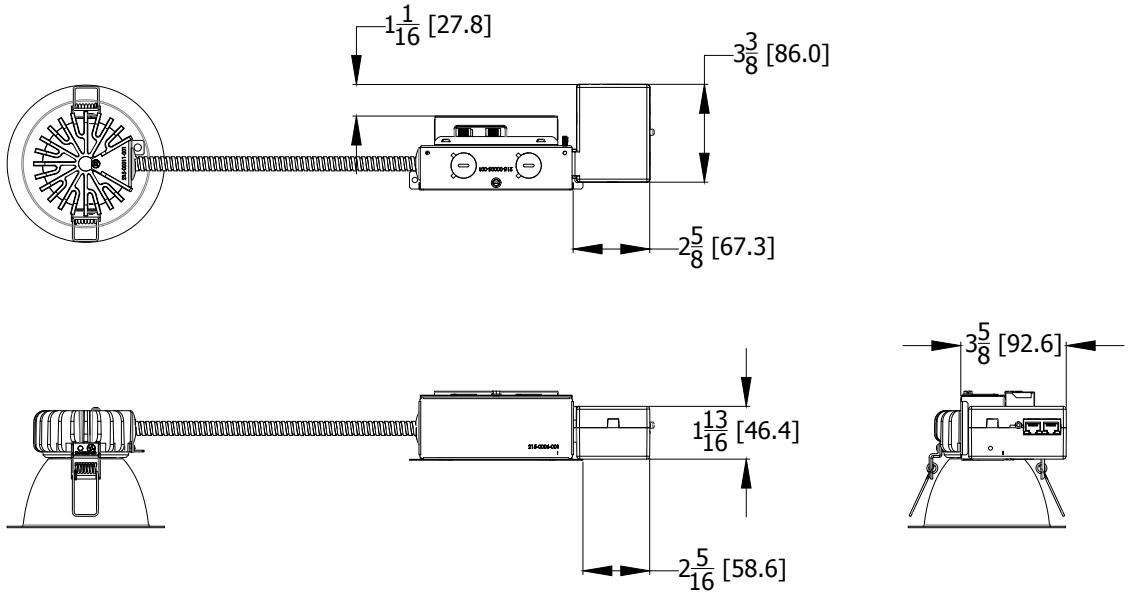

© 2020-2025 Acuity Brands Lighting, Inc. All rights reserved.

PHOTOMETRY

Distribution Curve	Distribution Data	Output Data	Illuminance Data at 30" Above Floor for a Single Luminaire

LBR6 SWW1 ALO2 AR LSS MWD MVOLT UGZ, Input Watts: 18.1, Delivered Lumens: 1970, LPW: 108.8, S/MH: 0.94, Test No: 20-518-03

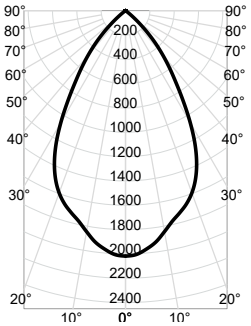

CP Summary

	0°
0°	2,018
5°	1,968
15°	1,721
25°	1,383
35°	724
45°	255
55°	9
65°	2
75°	1
85°	0
90°	0

Zonal Lumen Summary

Zone	Lumens	% Fixture
0° - 30°	1,292	66%
0° - 40°	1,751	89%
0° - 60°	1,967	100%
0° - 90°	1,970	100%
90° - 180°	0	0%
0° - 180°	1,970	100%

Cone of Light

Mounting Height	Initial FC Center Beam	Beam Diameter
6.0	56.1	7.1
8.0	31.5	9.5
10.0	20.2	11.9
12.0	14.0	14.3
14.0	10.3	16.7

Beam Angle: 61.5°
Field Angle: 92.7°

Luminance (cd/sq.m)

	Average Luminance
0°	142,862
45°	25,559
55°	1,074
65°	402
75°	246
85°	162

LBR6WW SWW1 ALO2 AR LSS WW, Input Watts: 18.7, Delivered Lumens: 1981, LPW: 105.9, S/MH: 0.67, Test No: 20-518-A1

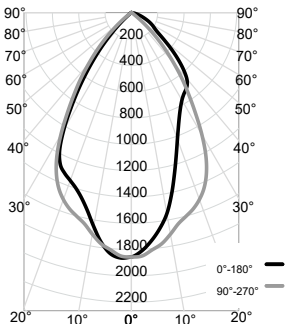

CP Summary

	0°	90°
0°	1,857	1,857
5°	1,740	1,810
15°	1,265	1,602
25°	864	1,349
35°	719	760
45°	502	280
55°	223	22
65°	126	10
75°	45	4
85°	9	1
90°	0	2

Zonal Lumen Summary

Zone	Lumens	% Fixture
0° - 30°	1,126	57%
0° - 40°	1,581	80%
0° - 60°	1,915	97%
0° - 90°	1,981	100%
90° - 180°	0	0%
0° - 180°	1,981	100%

Luminance (cd/sq.m)

	Average Luminance
0°	131,472
45°	50,247
55°	27,523
65°	21,156
75°	12,281
85°	7,229

LUMEN OUTPUT MULTIPLIERS - CCT			
3000K	3500K	4000K	5000K
0.98	1.0	1.01	1.03

LUMEN OUTPUT MULTIPLIERS - FINISH	
Clear Semi-spec (AR LSS)	1.0
Metallic Silver (MS)	0.84
White Painted (WR)	1.03
Black Painted (BR)	0.60

LUMEN OUTPUT MULTIPLIERS - CRI	
80	1.0
90	0.874

HOW TO ESTIMATE DELIVERED LUMENS IN EMERGENCY MODE

Use the formula below to estimate the delivered lumens in emergency mode

Delivered Lumens = 1.25 x P x LPW

P = Ouput power of emergency driver. P = 10W for PS1055CP

LPW = Lumen per watt rating of the luminaire. This information is available on the ABL luminaire spec sheet.
The LPW rating is also available at Designlight Consortium.

DOWNLIGHTING: 1 Acuity Way, Decatur, GA 30035 Phone: 1-800-705-SERV (7378) TechSupport-Lighting@Acuitybrands.com www.lithonia.com

© 2020-2025 Acuity Brands Lighting, Inc. All rights reserved. Rev. 08/15/25

DIMMER COMPATIBILITY

Not compatible with DALI or DMX dimmers. For specific compatible dimmers see below.

LINE VOLTAGE DIMMING:						
Type	**Forward Phase**	AL01 (500-1000lm)	AL02 (1000-2000lm)	AL03 (2000-3000lm)	AL04 (3000-5000lm)	Comment
MLV	Sensorswitch WPD	YES	YES	YES	YES	
MLV	Sensorswitch CMR PDT10 ADC VLP	YES	YES	YES	YES	
MLV	Synergy ISD 600LV	YES, 2x *	YES	YES	YES	* min 2 fixtures
INC	Synergy ISD 600 I	YES, 2x *	YES	YES	YES	* min 2 fixtures
MLV	Lutron Glyder GLV-600	YES	YES	YES	YES	
INC	Leviton SureSlide 6633	YES	YES	YES	YES	
MLV	Lutron Diva DVLV-600P	YES	YES	YES	YES	
MLV	Lutron Skylark SLV-600P	YES	YES	YES	YES	
INC	Lutron RadioRA 2 10ND	YES	YES	YES	YES	
MLV	Leviton SureSlide 6613-PLW	YES	YES	YES	YES	
INC	Lutron Diva DVCL-153P	YES	YES	YES	YES	
MLV	Leviton IPM06	YES, 2x *	YES	YES	YES	* min 2 fixtures
INC	**Leviton IPI06**	YES, 2x *	YES	YES	YES	* min 2 fixtures
INC	**Control4 C4-FPD 120**	YES	YES	YES	YES	
Type	Reverse Phase Dimmer Bank	AL01 (500-1000lm)	AL02 (1000-2000lm)	AL03 (2000-3000lm)	AL04 (3000-5000lm)	
ELV	Lutron Nova T NTELV-600	YES	YES	YES	YES	
ELV	Lutron Diva DVELV 600P	YES	YES	YES	YES	
ELV	Lutron Maestro MAELV 600	YES	YES	YES	YES	
ELV	Leviton Vizia VPE06-1LX	YES	YES	YES	YES	
ELV	**Leviton Illumatech IPE04**	YES	YES	YES	YES	
ELV	**Control4 C4-APD 120 REVERSE PHASE**	YES	YES	YES	YES	
Type	Miscellaneous Dimmers	AL01 (500-1000lm)	AL02 (1000-2000lm)	AL03 (2000-3000lm)	AL04 (3000-5000lm)	
PHA	Lutron RadioRA2 RRD-6NA	YES	YES	YES	YES	
PHA	**Lutron Maestro PRO LED+ RRD-PRO**	YES	YES	YES	YES	
Type	Control Systems	AL01 (500-1000lm)	AL02 (1000-2000lm)	AL03 (2000-3000lm)	AL04 (3000-5000lm)	
MLV	Lutron LP-RPM-4U	YES	YES	YES	YES	
PHA	Lutron LP-RPM-4A	YES	YES	YES	YES	
MLV	Lutron GRAPHIC EYE QSGRJ-3P	YES	YES	YES	YES	
PHA	Lutron PA Power Module PHPM-PA-120	YES	YES	YES	YES	
ELV	Lutron nLight nSP5PCD ELV	YES	YES	YES	YES	

DIMMER COMPATIBILITY

Not compatible with DALI or DMX dimmers. For specific compatible dimmers see below.

0-10V DIMMING:							
Manufacturer	System Type	Description	P/N	AL01 (500-1000lm)	AL02 (1000-2000lm)	AL03 (2000-3000lm)	AL04 (3000-5000lm)
ACUITY	Wall Box	sensorswitch, dimming switch with multi-way option	SPODMRA	YES	YES	YES	YES
ACUITY	Wall Box	sensorswitch, wall switch sensor, occupancy controlled dimming	WSX D WH	YES	YES	YES	YES
ACUITY	Control System	nLight	nPP16D	YES	YES	YES	YES
ACUITY	Control System	nLight	nPS 80 EZ	YES	YES	YES	YES
ACUITY	Control System	nLight Air	rPP20 D	YES	YES	YES	YES
Lutron	Other	0-10V (sink or source) PowPak wireless dimming module	RMJ-5T-DV-B	YES	YES	YES	YES
Wattstopper	Control System	Digital single relay room controller (0-10V)	LMRC-211	YES	YES	YES	YES
Crestron	Control System	DIN Rail 0-10V fluorescent dimmer, 4 feeds, 4 channels (Green Light System)	DIN-4DIMFLV4	YES	YES	YES	YES
Lutron	Other	Grafik Eye 0-10V adapter	GRX-TVI	YES	YES	YES	YES
Leviton	Wall Box	Illumatech 0-10V	IP710-DLX	YES	YES	YES	YES
Lutron	Control System	Mounted in the Homeworks QS panel - 0-10V dimmer (sink or source)	GRX-TVM2	YES	YES	YES	YES
Lutron	Wall Box	Nova 0-10V wallbox dimmer (use with PP-120-H line voltage relay)	NTFTV	YES	YES	YES	YES
Lutron	Wall Box	Nova 0-10V wallbox dimmer (use with PP-120-H line voltage relay)	NTSTV-DV	YES	YES	YES	YES
Lutron	Wall Box	Nova T	NFTV	YES	YES	YES	YES
Leviton	Wall Box	Renior II 0-10V	AWSMG-7DW	YES	YES	YES	YES

© 2020-2025 Acuity Brands Lighting, Inc. All rights reserved.

ADDITIONAL DATA

JOT
JUST ONE TOUCH

The Sensor Switch JOT enabled solution offers a wireless, app-free approach to single room lighting control. JOT enabled products use Bluetooth® Low Energy (BLE) technology to enable wireless dimming and switching.

Diagram

LBR6 Series

Sensor Switch
WSXA JOT

1. **Power:** Install JOT enabled fixtures and controls as instructed.
2. **Pair:** Insert the pairing tool into the pinhole on the wall switch; press and hold any button for 6 seconds.
3. **Play:** Once paired, each fixture will individually dim down to 10% brightness. All products will be fully functional.

COMPATIBLE 0-10V WALL-MOUNT DIMMERS		
MANUFACTURER	PART NO.	POWER BOOSTER AVAILABLE
Lutron®	Diva® DVTV	
	Diva® DVSCTV	
	Nova T® NTFTV	
	Nova® NFTV	
Leviton®	AWSMT-7DW	CN100
	AWSMG-7DW	PE300
	AMRMG-7DW	
	Leviton Centura Fluorescent Control System	
	IllumaTech® IP7 Series	
Synergy®	ISD BC	RDMFC
	SLD LPCS	
	Digital Equinox (DEQ BC)	
Douglas Lighting Controls	WPC-5721	
Entertainment Technology	Tap Glide TG600FAM120 (120V)	
	Tap Glide Heatsink TGH1500FAM120 (120V)	
	Oasis 0A2000FAMU	
Honeywell	EL7315A1019	EL7305A1010 (optional)
	EL7315A1009	
HUNT Dimming	Preset slide: PS-010-IV and PS-010-WH	
	Preset slide: PS-010-3W-IV and PS-010-3W-WH	
	Preset slide, controls FD-010: PS-IFC-010-IV and PS-IFC-010-WH-120/277V	
	Preset slide, controls FD-010: PS-IFC-010-3W-IV and PS-IFC-010-3W-WH-120/277V	
	Remote mounted unit: FD-010	
Lehigh Electronic Products	Solitaire	PBX
PDM Electrical Products	WPC-5721	
Starfield Controls	TR61 with DALI interface port	RT03 DALInet Router
WattStopper®	LS-4 used with LCD-101 and LCD-103	

DOWNLIGHTING: 1 Acuity Way, Decatur, GA 30035 Phone: 1-800-705-SERV (7378) TechSupport-Lighting@Acuitybrands.com www.lithonia.com

© 2020-2025 Acuity Brands Lighting, Inc. All rights reserved. Rev. 08/15/25

EXAMPLE
Group Fixture Control*
*Appiication diagram applies for fixtures with eldoLED drivers only.

nPS 80 EZ Dimming/Control Pack (qty: 2 required)
nPODM 2P DX Dual On/Off/Dim Push-Button WallPod
nCM ADCX Daylight Sensor with Automatic Dimming Control
nCM PDT 9 Dual Technology Occupancy Sensor

Description: This design provides a dual on/off/dim wall station that enables manual control of the fixtures in Row A and Row B separately. Additionally, a daylight harvesting sensor is provided so the lights in Row B can be configured to dim automatically when daylight is available. An occupancy sensor turns off all lights when the space is vacant.

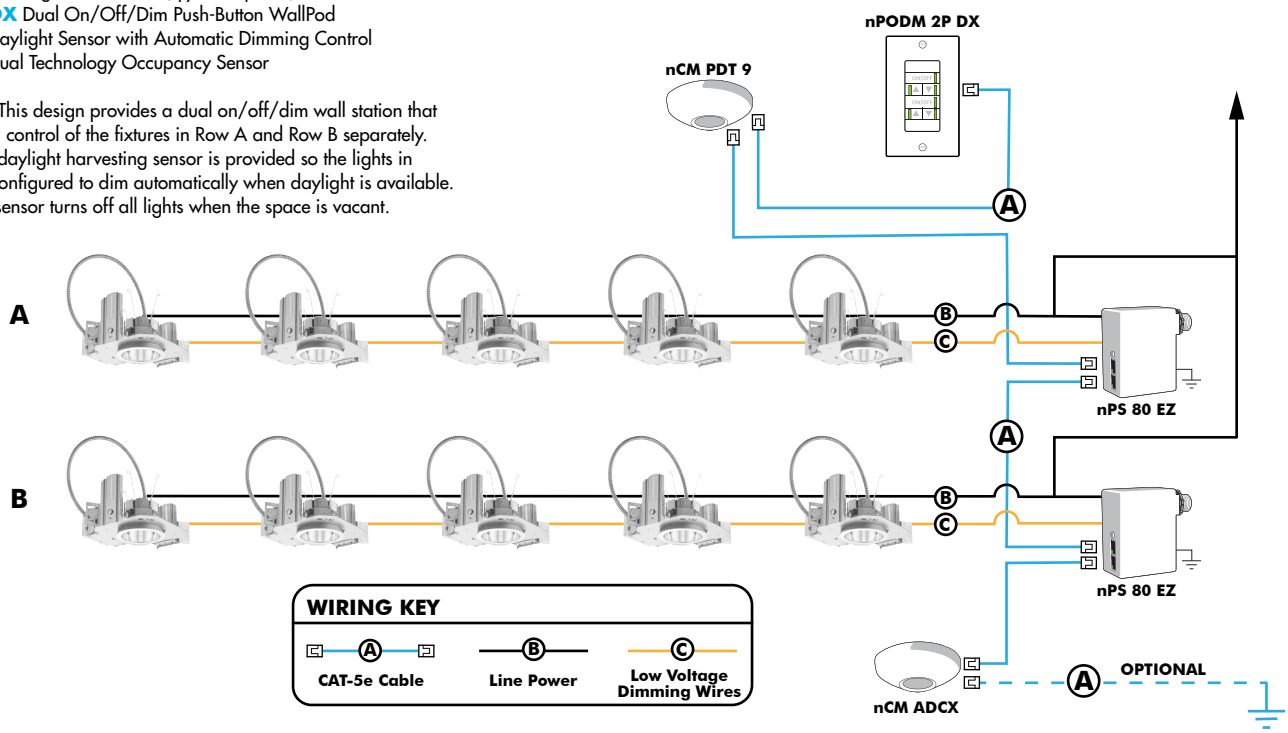

Choose Wall Controls

nLight offers multiple styles of wall controls - each with varying features and user experience.

Push-Button Wallpod
Traditional tactile buttons and LED user feedback

Graphic Wallpod
Full color touch screen provides a sophisticated look and feel

nLight® Wired Controls Accessories:			
Order as separate catalog number. Visit www.acuitybrands.com/products/controls/nlight for complete listing of nLight controls.			
WallPod Stations	**Model number**	**Occupancy sensors**	**Model Number**
On/Off	nPODM (Color)	Small motion 360°, ceiling (PIR/dual Tech)	nCM 9 / nCM PDT 9
On/Off & Raise/Lower	nPOD DX (Color)	Large motion 360°, ceiling (PIR/dual tech)	nCM 10 / nCM PDT 10
Graphic Touchscreen	nPOD GFX (Color)	Wide View (PIR/dual tech)	nWV 16 / nWV PDT 16
Photocell controls	**Model Number**	Wall Switch w/ Raise/Lower (PIR/dual tech)	nWSX LV DX / nWSX PDT LV DX
Dimming	nCM ADCX	**Cat-5 cables (plenum rated)**	**Model Number**
		10', CAT5 10FT	CAT5 10FT J1
		15, CAT5 15FT	CAT5 15FT J1

DOWNLIGHTING: 1 Acuity Way, Decatur, GA 30035 Phone: 1-800-705-SERV (7378) TechSupport-Lighting@Acuitybrands.com www.lithonia.com
© 2020-2025 Acuity Brands Lighting, Inc. All rights reserved.
Rev. 08/15/25

nLight® AIR Control Accessories:
Order as separate catalog number. Visit www.acuitybrands.com/products/controls/nlightair.

Wall switches	Model number
On/Off single pole	rPODB [color]
On/Off two pole	rPODB 2P [color]
On/Off & raise/lower single pole	rPODB DX [color]
On/Off & raise/lower two pole	rPODB 2P DX [color]
On/Off & raise/lower single pole	rPODBZ DX WH[1]

Notes

1 Can only be ordered with the RES7Z zone control sensor version.

UL924 Sequence of Operation

The below information applies to all nLight AIR devices with an EM option.

- EM devices will remain at their high-end trim and ignore wireless lighting control commands, unless a normal-power-sensed (NPS) broadcast is received at least every 8 seconds.
- Using the CL**AIR**ITY+ mobile app, EM devices must be associated with a group that includes a normal power sensing device to receive NPS broadcasts.
- Only non-emergency rPP20, rLSXR, rSBOR, rSDGR, and nLight AIR luminaires with version 3.4 or later firmware can provide normal power sensing for EM devices. See specification sheets for control devices and luminaires for more information on options that support normal power sensing.

nLight AIR

nLight AIR is the ideal solution for retrofit or new construction spaces where adding communication is cost prohibitive. The integrated nLight AIR rPP20 Power Pack is part of each Lithonia LDN Luminaire. These individually addressable controls offer the ultimate in flexibility during initial setup and for space repurposing.

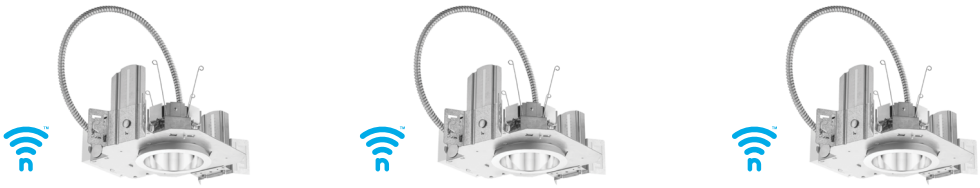

Simple as 1,2,3

1. Install the nLight® AIR fixtures with embedded smart sensor
2. Install the wireless battery-powered wall switch
3. With CL**AIR**ITY app, pair the fixtures with the wall switch and if desired, customize the sensor settings for the desired outcome

nLight AIR rPODB 2P DX Mobile Device

DOWNLIGHTING: 1 Acuity Way, Decatur, GA 30035 Phone: 1-800-705-SERV (7378) TechSupport-Lighting@Acuitybrands.com www.lithonia.com
© 2020-2025 Acuity Brands Lighting, Inc. All rights reserved. Rev. 08/15/25