HOLEMAKING

Fast, Superior Cutting

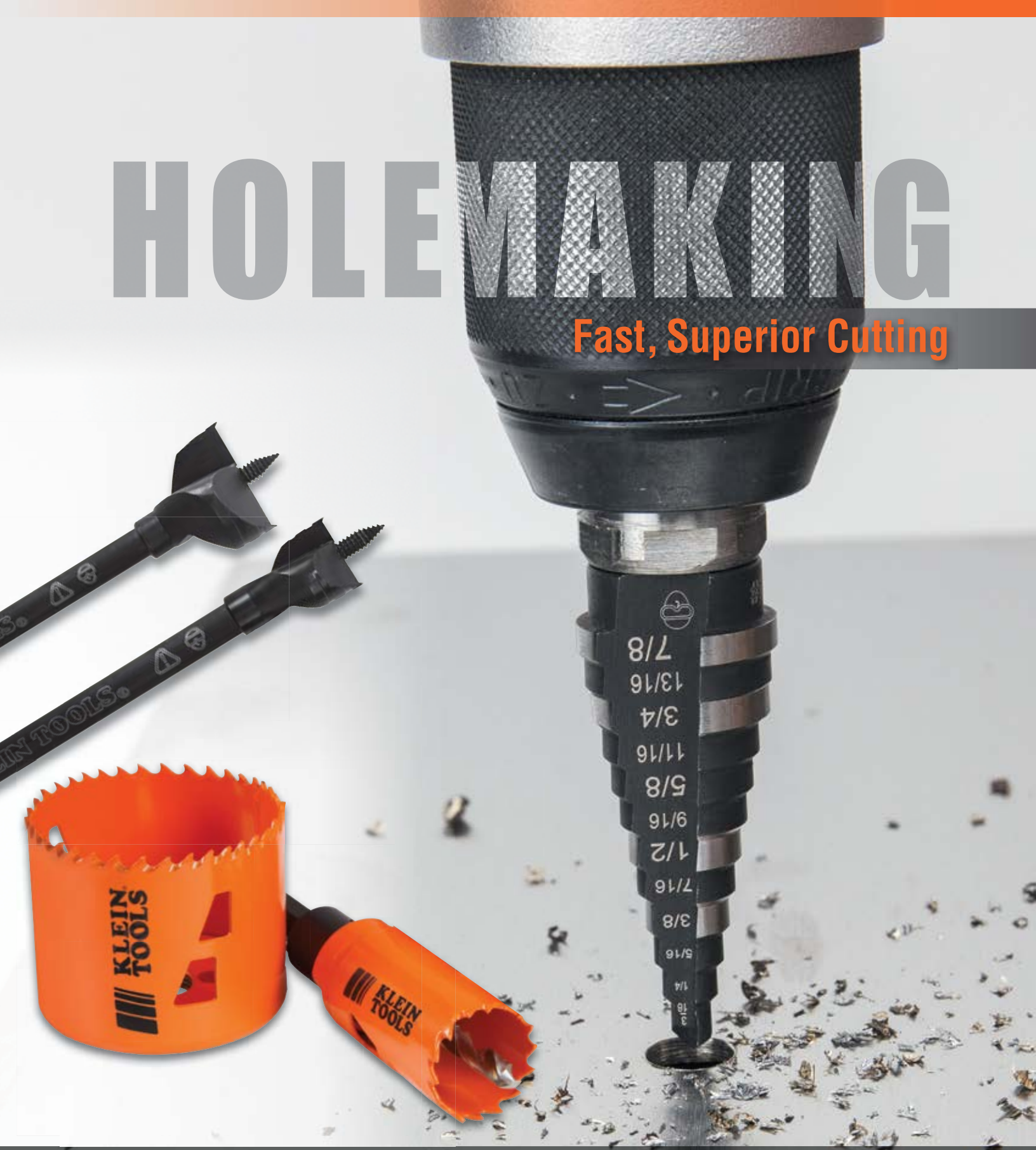

KLEIN TOOLS®

For Professionals… Since 1857™

HOLE SAWS

Bi-Metal Hole Saws

Optimized for fast cutting of steel – even stainless!

Multiple slots provide different leverage points to easily remove material

- **Cuts precise holes** in stainless steel and mild steel, drywall, ceiling tile, laminates, wood and plastic.
- **Thick back plates** and walls stand up to heavy use and abuse.
- **Long-lasting,** consistent cutting performance.

Cat. No.	UPC# 0-92644+	Saw Diameter	Pipe Tap Size*	Pipe Entrance Size**	For use with Arbor No.
31914	31914-3	7/8" (22 mm)	3/4" (19 mm)	1/2" (13 mm)	31905
31918	31918-1	1-1/8" (29 mm)	1" (25 mm)	3/4" (19 mm)	
31922	31922-8	1-3/8" (35 mm)	–	1" (25 mm)	31905 or 31906
31928	31928-0	1-3/4" (44 mm)	1-1/2" (38 mm)	1-1/4" (32 mm)	31906
31932	31932-7	2" (51 mm)	–	1-1/2" (38 mm)	
31940	31940-2	2-1/2" (64 mm)	–	2" (51 mm)	
31944	31944-0	2-3/4" (70 mm)	–		
31948	31948-8	3" (76 mm)	–	2-1/2" (64 mm)	
31958	31958-7	3-5/8" (92 mm)	–	3" (76 mm)	
31972	31972-3	4-1/2" (114 mm)	–	4" (102 mm)	
31900	31900-6	6-3/8" (162 mm)	–		
31902	31902-0	8-Piece Kit includes 7/8", 1-1/8", 1-3/8", 1-3/4", 2" and 2-1/2" (22, 29, 35, 44, 51 and 64 mm) saws and case.			
Arbors and Replacement Bits					
31905	31905-1	Threaded Arbor with adapter, 3/8" (10 mm)			
31906	31906-8	Threaded Arbor, 3/8" (10 mm) with Pins			
31907	31907-5	Replacement Pilot Bit, 1/4" x 3-1/4"			

* Pipe Tap Size – The sizes listed provide the necessary information whenever a pipe is to be threaded into tanks, boilers, etc. To secure the best results, the hole should be reamed before tapping with a reamer having a taper of 3/4" per foot.

**Pipe Entrance Size – The sizes listed provide the necessary information for any given pipe size to have sufficient clearance to pass through beams, walls, bulkheads, etc.

STEP BITS

Double-Fluted Step Drill Bits

Faster drilling than single flute bits!

- **Easy-to-read step rings** save time when drilling common holes.
- **Fast-starting,** non-walking drill tip.
- **Thick, extra-long** 3/8" hex shank provides a firm, positive grip in the drill and won't spin out.

Cat. No.	UPC# 0-92644+	Quick Reference	No. of Holes	Increment	Hole Size Range
KTSB01	59101-3	#1	13	1/32"	1/8" – 1/2" (3 mm – 13 mm)
KTSB03	59103-7	#3	9	1/16"	1/4" – 3/4" (6 mm – 19 mm)
KTSB11	59111-2	#11	2	–	7/8" – 1-1/8" (22 mm – 29 mm)
KTSB14	59114-3	#14	12	1/16"	3/16" – 7/8" (5 mm – 22 mm)
KTSB15	59115-0	#15	3	–	7/8", 1-1/8", 1-3/8" (22, 29, 35 mm)

WOOD BORING BITS

Wood Boring Bits

Superior to auger bits!

- **New low-torque design** greatly reduces the wrist fatigue from standard auger bits.
- **Easily change direction** when drilling holes to customize the shape.
- **Unique head shape minimizes chatter** while drilling versus ordinary paddle bits.
- **Easy-to-sharpen** blades.
- **Easy-to-replace** pilot screw shaft.

Cat. No.	UPC# 0-92644+	Hole Size
53932	53932-9	7/8" (22 mm)
53934	53934-3	1-1/8" (29 mm)
53936	53936-7	1-3/8" (35 mm)
53938	53938-1	Replacement Shaft

6" (152 mm) Shaft Length, 3/8" (9.5 mm) Shaft Diameter, 5/16" (8 mm) Hex End

HOLEMAKING

Klein also makes durable, long-lasting products *for cutting holes in heavy-gauge steel panels and cutting holes in wood for cabling applications!*

Carbide Hole Cutters

Cat. No.	Description
31850	3/4" (19 mm) Carbide Hole Cutter
31852	7/8" (22 mm) Carbide Hole Cutter
31856	1-1/8" (29 mm) Carbide Hole Cutter
31860	1-3/8" (35 mm) Carbide Hole Cutter
31866	1-3/4" (44 mm) Carbide Hole Cutter
31868	2" (51 mm) Carbide Hole Cutter
31870	2-1/2" (64 mm) Carbide Hole Cutter
31874	Replacement Pilot Bit
31872	4-Piece Carbide Hole Cutter Set
31873	8-Piece Master Electrician's Hole Cutter Kit

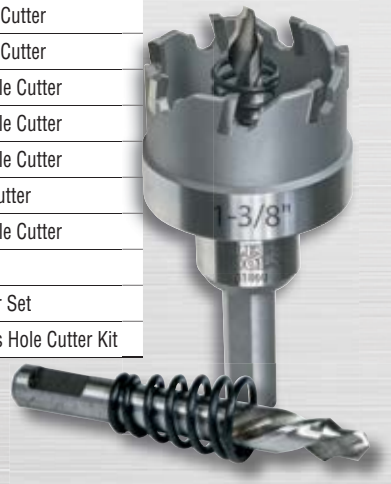

Knockout Punches

Cat. No.	Description
53727	Knockout Punch Set, 3/4" (19 mm)
53728	Knockout Punch Set, 1/2" (12.5 mm)
53732	Knockout Punch Set with Wrench

Ship-Auger Bits

Cat. No.	Description
6" (152 mm) Bits	
53402	3/4" (19 mm) Ship-Auger Bits
53404	7/8" (22 mm) Ship-Auger Bits
53406	1" (25 mm) Ship-Auger Bits
53408	1-1/8" (29 mm) Ship-Auger Bits
18" (457 mm) Bits	
53437	3/4" (19 mm) Ship-Auger Bits
53439	7/8" (22 mm) Ship-Auger Bits
53441	1" (25 mm) Ship-Auger Bits
53443	1-1/8" (29 mm) Ship-Auger Bits

Flex Drill Bits

Cat. No.	Description
53716	3/8" x 54" (9.5 mm x 1372 mm)
53717	3/8" x 72" (9.5 mm x 1829 mm)
53718	9/16" x 54" (14 mm x 1372 mm)
53719	3/4" x 54" (19 mm x 1372 mm)
53751	3/4" x 72" (19 mm x 1829 mm)
53720	1" x 54" (25 mm x 1829 mm)

Flex Bit Kit

Cat. No.	Description
53721	Flex Bit Kit

See our complete line of **Holemaking**

www.kleintools.com

KLEIN TOOLS®

For Professionals... Since 1857™

© 2015 Klein Tools, Inc.

Lincolnshire, IL 60069-1418
Rev. 08/15 A 96397

HOLEMAKING

Fast, Superior Cutting

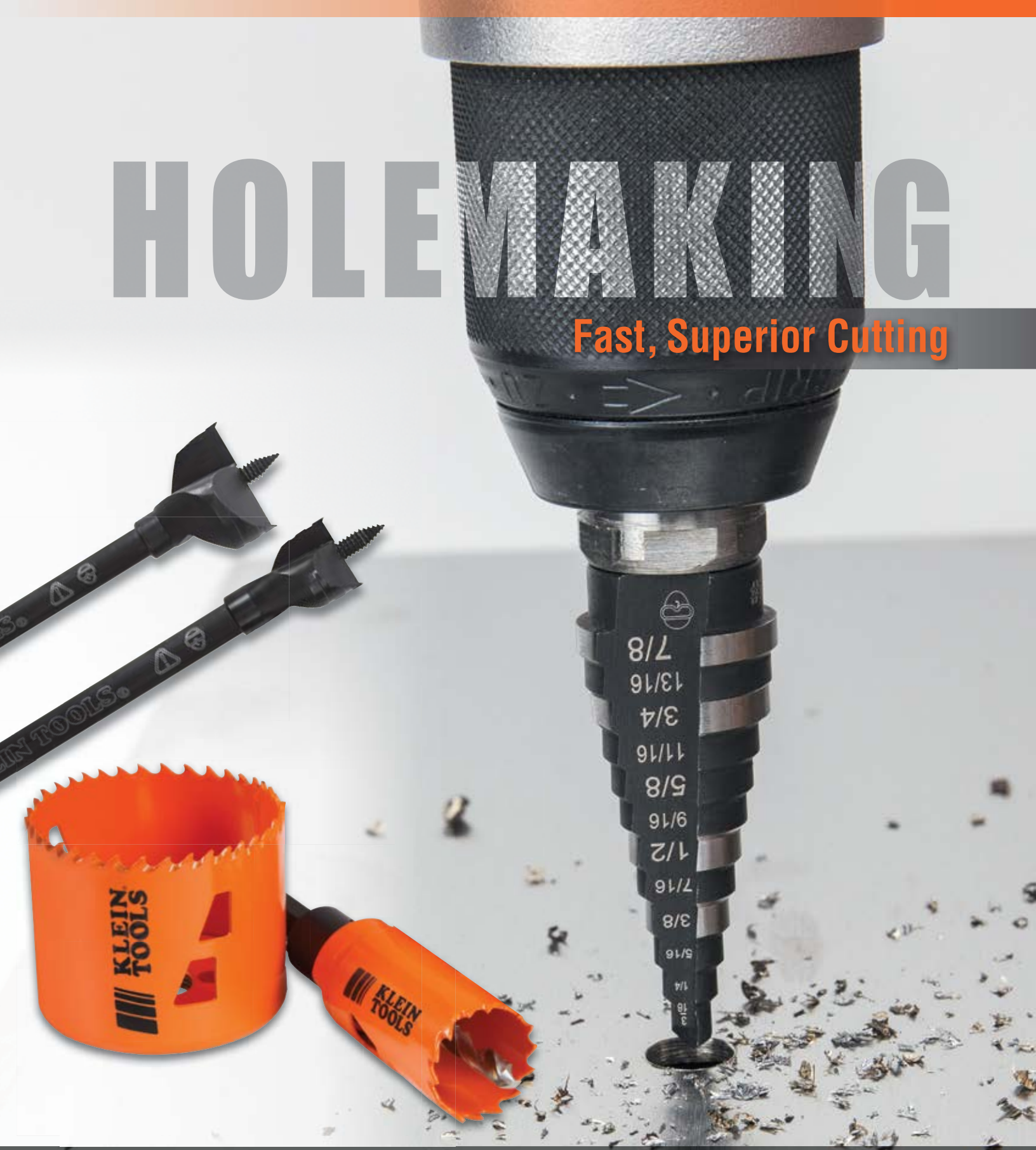

KLEIN TOOLS®

For Professionals… Since 1857™

HOLE SAWS

Bi-Metal Hole Saws

Optimized for fast cutting of steel – even stainless!

Multiple slots provide different leverage points to easily remove material

- **Cuts precise holes** in stainless steel and mild steel, drywall, ceiling tile, laminates, wood and plastic.
- **Thick back plates** and walls stand up to heavy use and abuse.
- **Long-lasting,** consistent cutting performance.

Cat. No.	UPC# 0-92644+	Saw Diameter	Pipe Tap Size*	Pipe Entrance Size**	For use with Arbor No.
31914	31914-3	7/8" (22 mm)	3/4" (19 mm)	1/2" (13 mm)	31905
31918	31918-1	1-1/8" (29 mm)	1" (25 mm)	3/4" (19 mm)	
31922	31922-8	1-3/8" (35 mm)	–	1" (25 mm)	31905 or 31906
31928	31928-0	1-3/4" (44 mm)	1-1/2" (38 mm)	1-1/4" (32 mm)	31906
31932	31932-7	2" (51 mm)	–	1-1/2" (38 mm)	
31940	31940-2	2-1/2" (64 mm)	–	2" (51 mm)	
31944	31944-0	2-3/4" (70 mm)	–		
31948	31948-8	3" (76 mm)	–	2-1/2" (64 mm)	
31958	31958-7	3-5/8" (92 mm)	–	3" (76 mm)	
31972	31972-3	4-1/2" (114 mm)	–	4" (102 mm)	
31900	31900-6	6-3/8" (162 mm)	–		
31902	31902-0	8-Piece Kit includes 7/8", 1-1/8", 1-3/8", 1-3/4", 2" and 2-1/2" (22, 29, 35, 44, 51 and 64 mm) saws and case.			
Arbors and Replacement Bits					
31905	31905-1	Threaded Arbor with adapter, 3/8" (10 mm)			
31906	31906-8	Threaded Arbor, 3/8" (10 mm) with Pins			
31907	31907-5	Replacement Pilot Bit, 1/4" x 3-1/4"			

* Pipe Tap Size – The sizes listed provide the necessary information whenever a pipe is to be threaded into tanks, boilers, etc. To secure the best results, the hole should be reamed before tapping with a reamer having a taper of 3/4" per foot.

**Pipe Entrance Size – The sizes listed provide the necessary information for any given pipe size to have sufficient clearance to pass through beams, walls, bulkheads, etc.

STEP BITS

Double-Fluted Step Drill Bits

Faster drilling than single flute bits!

- **Easy-to-read step rings** save time when drilling common holes.
- **Fast-starting,** non-walking drill tip.
- **Thick, extra-long** 3/8" hex shank provides a firm, positive grip in the drill and won't spin out.

Cat. No.	UPC# 0-92644+	Quick Reference	No. of Holes	Increment	Hole Size Range
KTSB01	59101-3	#1	13	1/32"	1/8" – 1/2" (3 mm – 13 mm)
KTSB03	59103-7	#3	9	1/16"	1/4" – 3/4" (6 mm – 19 mm)
KTSB11	59111-2	#11	2	–	7/8" – 1-1/8" (22 mm – 29 mm)
KTSB14	59114-3	#14	12	1/16"	3/16" – 7/8" (5 mm – 22 mm)
KTSB15	59115-0	#15	3	–	7/8", 1-1/8", 1-3/8" (22, 29, 35 mm)

WOOD BORING BITS

Wood Boring Bits

Superior to auger bits!

- **New low-torque design** greatly reduces the wrist fatigue from standard auger bits.
- **Easily change direction** when drilling holes to customize the shape.
- **Unique head shape minimizes chatter** while drilling versus ordinary paddle bits.
- **Easy-to-sharpen** blades.
- **Easy-to-replace** pilot screw shaft.

Cat. No.	UPC# 0-92644+	Hole Size
53932	53932-9	7/8" (22 mm)
53934	53934-3	1-1/8" (29 mm)
53936	53936-7	1-3/8" (35 mm)
53938	53938-1	Replacement Shaft

6" (152 mm) Shaft Length, 3/8" (9.5 mm) Shaft Diameter, 5/16" (8 mm) Hex End

HOLEMAKING

Klein also makes durable, long-lasting products *for cutting holes in heavy-gauge steel panels and cutting holes in wood for cabling applications!*

Carbide Hole Cutters

Cat. No.	Description
31850	3/4" (19 mm) Carbide Hole Cutter
31852	7/8" (22 mm) Carbide Hole Cutter
31856	1-1/8" (29 mm) Carbide Hole Cutter
31860	1-3/8" (35 mm) Carbide Hole Cutter
31866	1-3/4" (44 mm) Carbide Hole Cutter
31868	2" (51 mm) Carbide Hole Cutter
31870	2-1/2" (64 mm) Carbide Hole Cutter
31874	Replacement Pilot Bit
31872	4-Piece Carbide Hole Cutter Set
31873	8-Piece Master Electrician's Hole Cutter Kit

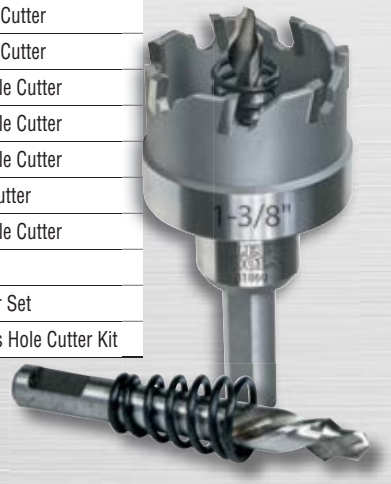

Knockout Punches

Cat. No.	Description
53727	Knockout Punch Set, 3/4" (19 mm)
53728	Knockout Punch Set, 1/2" (12.5 mm)
53732	Knockout Punch Set with Wrench

Ship-Auger Bits

Cat. No.	Description
6" (152 mm) Bits	
53402	3/4" (19 mm) Ship-Auger Bits
53404	7/8" (22 mm) Ship-Auger Bits
53406	1" (25 mm) Ship-Auger Bits
53408	1-1/8" (29 mm) Ship-Auger Bits
18" (457 mm) Bits	
53437	3/4" (19 mm) Ship-Auger Bits
53439	7/8" (22 mm) Ship-Auger Bits
53441	1" (25 mm) Ship-Auger Bits
53443	1-1/8" (29 mm) Ship-Auger Bits

Flex Drill Bits

Cat. No.	Description
53716	3/8" x 54" (9.5 mm x 1372 mm)
53717	3/8" x 72" (9.5 mm x 1829 mm)
53718	9/16" x 54" (14 mm x 1372 mm)
53719	3/4" x 54" (19 mm x 1372 mm)
53751	3/4" x 72" (19 mm x 1829 mm)
53720	1" x 54" (25 mm x 1829 mm)

Flex Bit Kit

Cat. No.	Description
53721	Flex Bit Kit

See our complete line of **Holemaking**

www.kleintools.com

KLEIN TOOLS®

For Professionals... Since 1857™

© 2015 Klein Tools, Inc.

Lincolnshire, IL 60069-1418
Rev. 08/15 A 96397