BROAN®

SPECIFICATION SHEET

COMBINATION UNITS

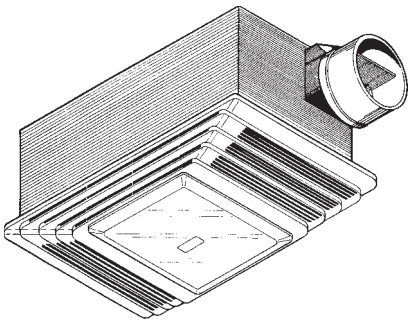

Model 655 — Heater/Fan/Light
Model 659 — Heater/Fan/Light
Model 656 — Heater/Light
Model 657 — Fan/Light
Model 658 — Heater/Fan

FEATURES

GRILLE:
- White polymeric grille
- Directional vanes for heat and exhaust
- Snap-in light diffusing lens for 100W bulb (not included)

VENTILATOR (except Model 656):
- Resilient anti-vibration mounts
- Plug-in, permanently lubricated motor
- Low sound, high performance blower wheel

HEATER (except Model 657):
- 1300 watts, with metal blower wheel for efficient, even heating
- Plug-in, permanently lubricated motor - functions independent of ventilator

HOUSING:
- Adjustable mounting brackets span up to 24"
- Polymeric damper/duct connector with 2" long tapered sleeve and no metallic clatter
- Compact 23 gage steel housing finished with electrically-bonded epoxy paint

NOTE: For installation in ceilings up to 12/12 pitch
- Suitable for use in insulated ceilings (Type I.C.).
- For all models shown above, except Model 658, use supply wiring rated for at least 90°C.
- Models 655 and 659: Use Model 66V (Ivory) / 66W (White) Three Function Control
- Models 656, 657, and 658: Use Model 68V (Ivory) / 68W (White) Two Function Control
- Model 657 U.L. listed for use in tub/shower enclosure with GFCI branch wiring

Model 654H: Rough-in housing for Models 655F, 656F, 657F, 658F, 659F finish assemblies. 654H packed (4) per carton, 655F thru 659F packed (1) per carton

TYPICAL SPECIFICATION

Combination unit shall be Broan Model 655 (Model 659) (Model 656) (Model 657) (Model 658).

Unit shall have steel housing finished in electrically-bonded epoxy paint and adjustable mounting brackets.

Unit shall have directional vanes for heat and exhaust and must be rated to handle a 100W bulb.

Fan, heater and light shall be separately controllable. Motors shall be permanently lubricated. RPM not to exceed number listed for each model.

Air delivery shall be no less and sound levels no greater than listed for each model. All air and sound ratings shall be certified by HVI.

Units shall be U.L. listed.

Models 655, 656, 657, 658 and 659 suitable for use in insulated ceilings. (Type I. C.)

® 2100 HVI CERTIFIED

UL®

Broan-NuTone LLC, 926 West State Street, Hartford, WI 53027 (1-800-637-1453)

REFERENCE	QTY.	REMARKS	Project
			Location
			Architect
			Engineer
			Contractor
			Submitted by Date

PERFORMANCE RATINGS - MODELS 655, 656, 657, 658, 659

MODEL	DESCRIPTION	VOLTS	AMPS	WATTS*	SONES	CFM	DUCT
655	Heater/Fan/Light	120	12.8	1536	4.0	70	4" Round
656	Heater/Light	120	11.9	1428	---	----	----------
657	Fan/Light	120	2.0	N/A	4.0	70	4" Round
658	Heater/Fan	120	11.9	1428	4.0	70	4" Round
659	Heater/Fan/Light	120	12.0	1440	2.5	50	4" Round

*Total connected load

HVI-2100 CERTIFIED RATINGS comply with new testing technologies and procedures prescribed by the Home Ventilating Institute, for off-the-shelf products, as they are available to consumers. Product performance is rated at 0.1 in. static pressure, based on tests conducted in AMCA's state-of-the-art test laboratory. Sones are a measure of humanly-perceived loudness, based on laboratory measurements.

MODELS 655, 656, 657 & 659

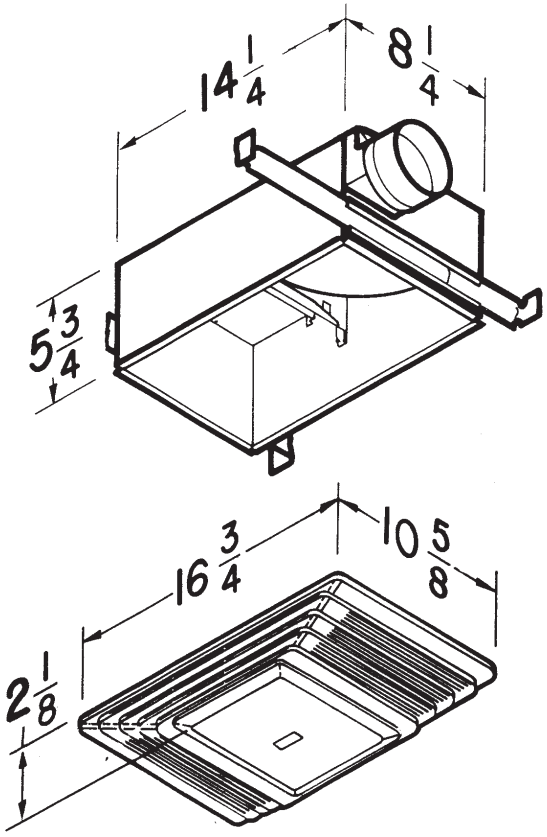

MODEL 658

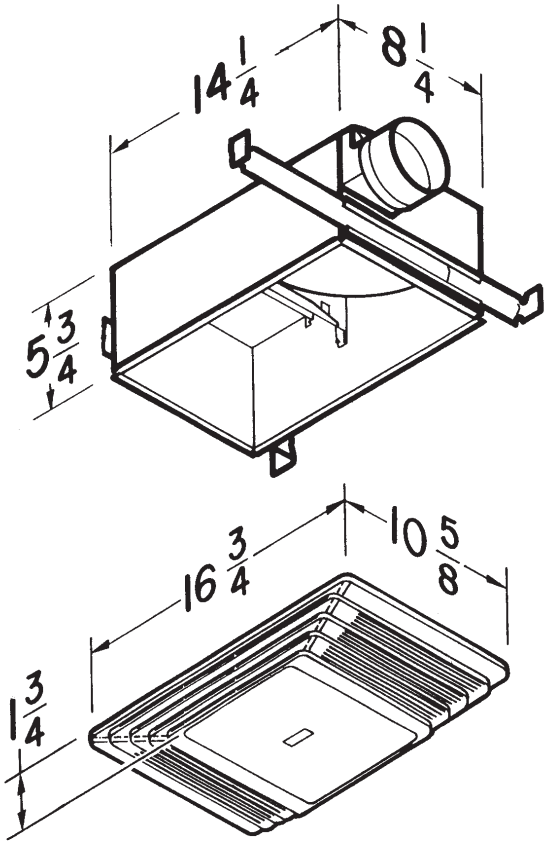

Broan-NuTone LLC, 926 West State Street, Hartford, WI 53027 (1-800-637-1453)

BROAN®

SPECIFICATION SHEET

COMBINATION UNITS

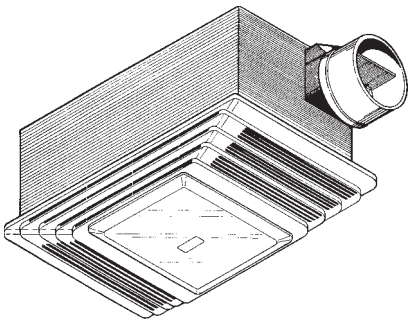

Model 655 — Heater/Fan/Light
Model 659 — Heater/Fan/Light
Model 656 — Heater/Light
Model 657 — Fan/Light
Model 658 — Heater/Fan

FEATURES

GRILLE:
- White polymeric grille
- Directional vanes for heat and exhaust
- Snap-in light diffusing lens for 100W bulb (not included)

VENTILATOR (except Model 656):
- Resilient anti-vibration mounts
- Plug-in, permanently lubricated motor
- Low sound, high performance blower wheel

HEATER (except Model 657):
- 1300 watts, with metal blower wheel for efficient, even heating
- Plug-in, permanently lubricated motor - functions independent of ventilator

HOUSING:
- Adjustable mounting brackets span up to 24"
- Polymeric damper/duct connector with 2" long tapered sleeve and no metallic clatter
- Compact 23 gage steel housing finished with electrically-bonded epoxy paint

NOTE: For installation in ceilings up to 12/12 pitch
- Suitable for use in insulated ceilings (Type I.C.).
- For all models shown above, except Model 658, use supply wiring rated for at least 90°C.
- Models 655 and 659: Use Model 66V (Ivory) / 66W (White) Three Function Control
- Models 656, 657, and 658: Use Model 68V (Ivory) / 68W (White) Two Function Control
- Model 657 U.L. listed for use in tub/shower enclosure with GFCI branch wiring

Model 654H: Rough-in housing for Models 655F, 656F, 657F, 658F, 659F finish assemblies. 654H packed (4) per carton, 655F thru 659F packed (1) per carton

TYPICAL SPECIFICATION

Combination unit shall be Broan Model 655 (Model 659) (Model 656) (Model 657) (Model 658).

Unit shall have steel housing finished in electrically-bonded epoxy paint and adjustable mounting brackets.

Unit shall have directional vanes for heat and exhaust and must be rated to handle a 100W bulb.

Fan, heater and light shall be separately controllable. Motors shall be permanently lubricated. RPM not to exceed number listed for each model.

Air delivery shall be no less and sound levels no greater than listed for each model. All air and sound ratings shall be certified by HVI.

Units shall be U.L. listed.

Models 655, 656, 657, 658 and 659 suitable for use in insulated ceilings. (Type I. C.)

® 2100 HVI CERTIFIED

UL®

Broan-NuTone LLC, 926 West State Street, Hartford, WI 53027 (1-800-637-1453)

REFERENCE	QTY.	REMARKS	Project
			Location
			Architect
			Engineer
			Contractor
			Submitted by Date

PERFORMANCE RATINGS - MODELS 655, 656, 657, 658, 659

MODEL	DESCRIPTION	VOLTS	AMPS	WATTS*	SONES	CFM	DUCT
655	Heater/Fan/Light	120	12.8	1536	4.0	70	4" Round
656	Heater/Light	120	11.9	1428	---	----	----------
657	Fan/Light	120	2.0	N/A	4.0	70	4" Round
658	Heater/Fan	120	11.9	1428	4.0	70	4" Round
659	Heater/Fan/Light	120	12.0	1440	2.5	50	4" Round

*Total connected load

HVI-2100 CERTIFIED RATINGS comply with new testing technologies and procedures prescribed by the Home Ventilating Institute, for off-the-shelf products, as they are available to consumers. Product performance is rated at 0.1 in. static pressure, based on tests conducted in AMCA's state-of-the-art test laboratory. Sones are a measure of humanly-perceived loudness, based on laboratory measurements.

MODELS 655, 656, 657 & 659

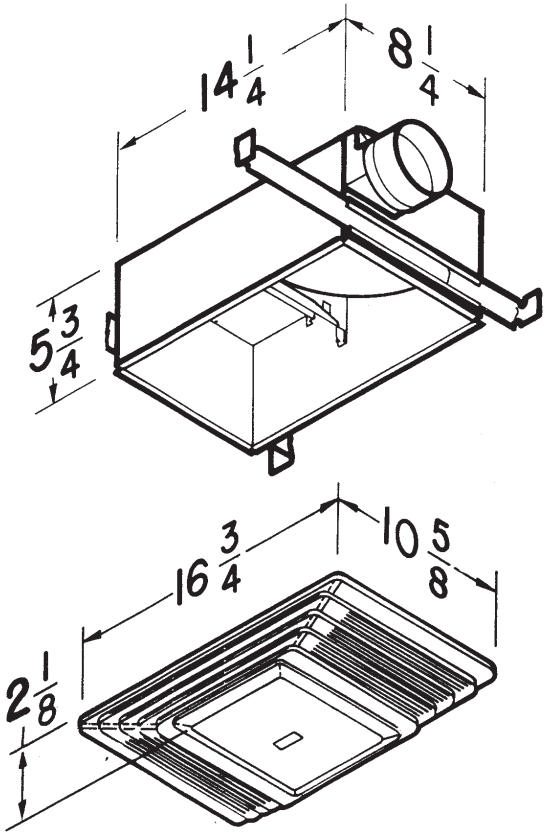

MODEL 658

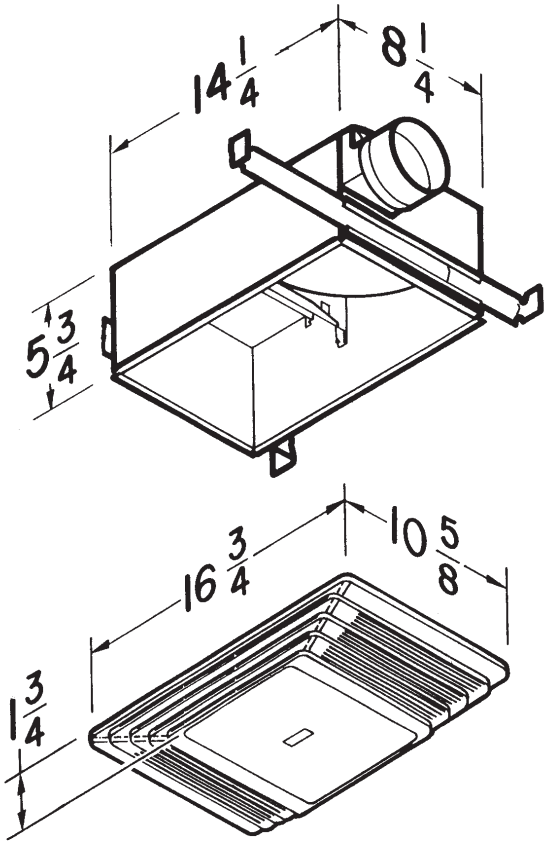

Broan-NuTone LLC, 926 West State Street, Hartford, WI 53027 (1-800-637-1453)