www.ledvanceUS.com

LEDVANCE LUMINAIRES
STRING LIGHT

LEDVANCE LUMINAIRE SPECIFICATION DATA

Catalog #	Comments
Project	
Type	
Prepared by	

PERFORMANCE CLASS™

APPLICATION

The LEDVANCE String Lights are ideal for temporary lighting with a versatile and a durable design for indoor construction and job site applications to replace HID and incandescent lights.

BENEFITS & FEATURES

- Strong and durable construction with integrated hook for mounting
- Integrated 100ft power cord on with 10 lamp heads
- Linkable up to 40 lights
- IP65 rating ensures product durability
- Lasts up to 5× longer than HID lamps
- No warm-up time, instant on with full light output and stable color
- High CRI when compared to traditional lighting technologies
- Consumes up to 72% less energy than equivalent HID lamps while delivering same light output
- When linked, these strands utilize parallel wiring to sustain light
- Even if one lamp in the series becomes damaged or fails, all others will remain illuminated
- Replacement for 175W-400W HID applications
- Up to 123 LPW
- 5000K color temperature
- CRI 80+

ELECTRICAL

- 120 Vac 18 AWG cord with straight plug
- Power Factor > 90%
- THD < 20%

OPERATING TEMPERATURE

- -40°F to +104°F (-40°C to +40°C)

CERTIFICATIONS & LISTINGS

- ETLus listed to UL1598 standards
- RoHS
- FCC
- IP65: wet location

WARRANTY

- Standard 5 year lamp warranty
- NLB Trusted Warranty Program

RATED LIFE

- 50,000 hours (L_{70})

INSTALLATION

- Hang the lamp up with a pre-installed hook
- Lamp operates directly on line voltage, 120Vac
- For linking additional lamps, connect the power cable to the expansion outlet on the lamp.

ORDERING GUIDE

STRLIGHT	130	PLG	8	50	G2
PRODUCT NAME	WATTAGE	VOLTAGE	CRI	COLOR TEMP	GENERATION
STRLIGHT = Temporary String Light	130 = 130 Watts	PLG = 120V straight plug	8 = >80	50 = 5000K	G2 = 2nd generation

ORDERING INFORMATION

ITEM #	ORDERING ABBREVIATION	TOTAL WATTAGE (W)	LAMP WATTAGE* (W)	INPUT VOLTAGE (V)	DIM.	CRI	COLOR TEMP.	CONNECT.	CORD LENGTH (FT)	MAXIMUM LINKABILITY	TOTAL FIXTURE LUMENS (LM)	LPW	AVE. LIFE (HRS)	CASE QTY
66574	LEDSTRLIGHT130PLG850G2	130	13	120V	No	>80	5000K	Plug	100ft (10 lamps)	40 lights (4 sets)	16000	Up to 123	50,000	2

WATTAGE COMPARISON

TRADITIONAL SOURCE	TRADITIONAL SYSTEM WATTAGE	LED SYSTEM WATTAGE	ENERGY SAVINGS
175 W MH	210	130	38%
250 W MH	290	130	55%
250 W HPS	295	130	56%
250 W MH	290	130	55%
250 W HPS	295	130	56%
320 W MH	370	130	65%
400 W HPS	460	130	72%
400 W MH	450	130	71%

PHYSICAL INFORMATION

PRODUCT DESCRIPTION	LENGTH	DIAMETER
LEDSTRLIGHT (per lamp)	2.56" (65mm)	3.94" (100mm)
Cord Length	100ft	

H5-12LV-100FT

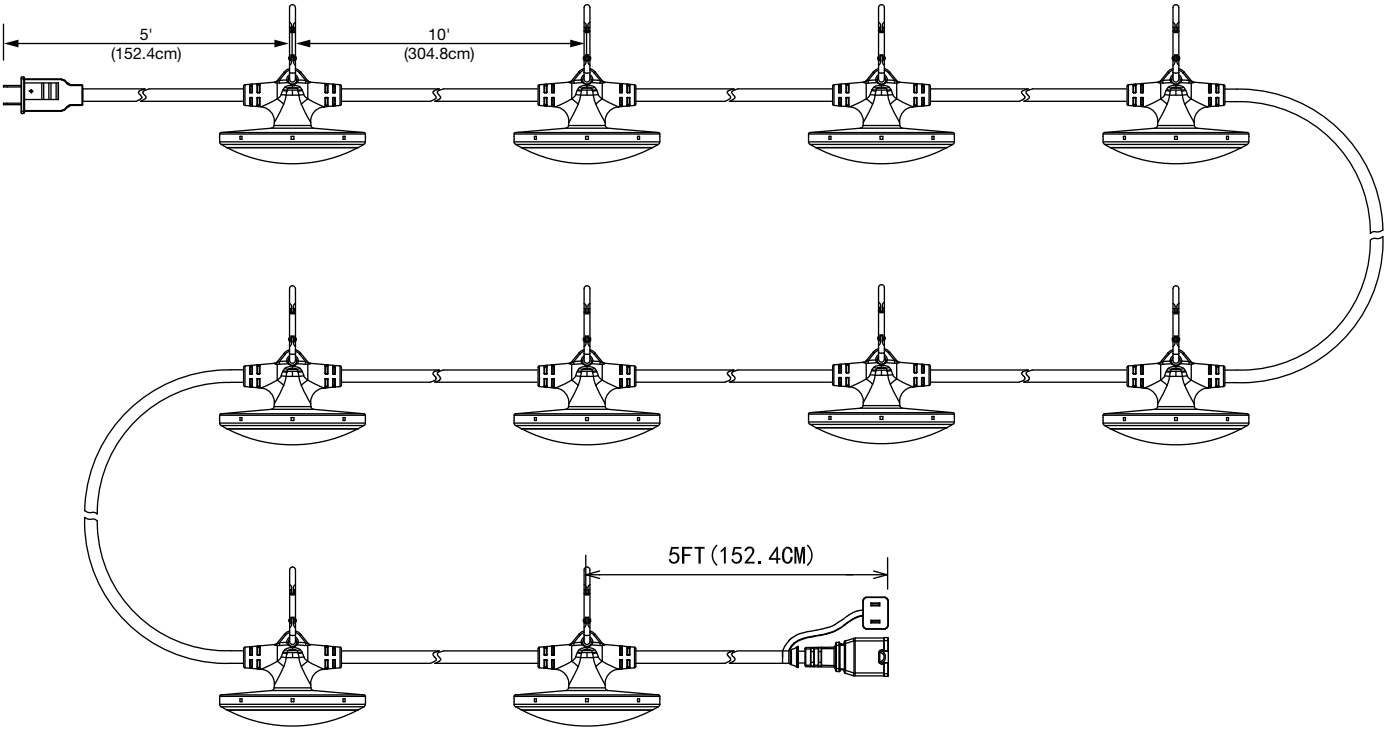

H5-12LV-SINGLE HEAD

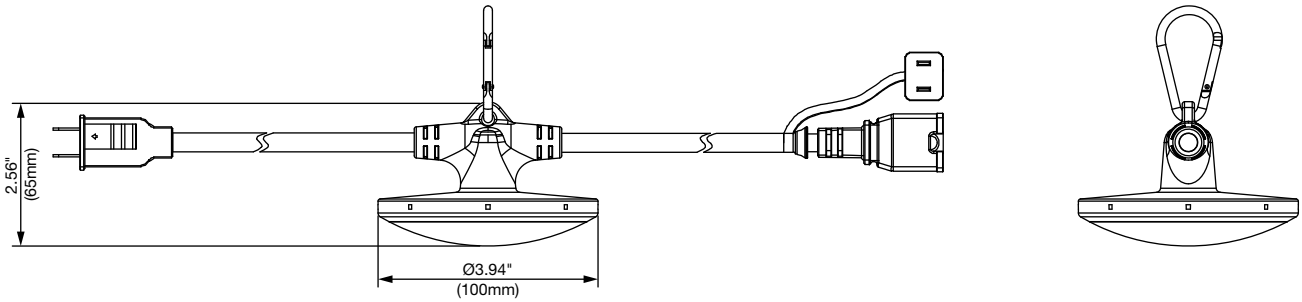

ADDITIONAL SPECIFICATIONS

- The LEDVANCE Performance Class™ String Light is an integrated LED fixture with no replaceable components
- Not intended for use in dimming applications

PHOTOMETRIC INFORMATION

LUMINOUS INTENSITY DISTRIBUTION / ILLUMINANCE INFORMATION

13W

LUMINOUS INTENSITY DISTRIBUTION DIAGRAM

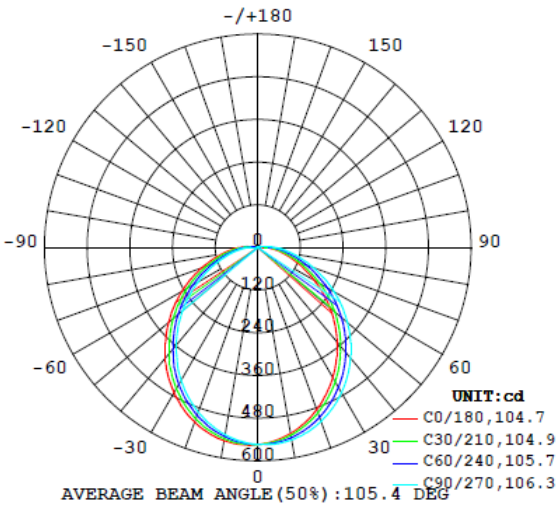

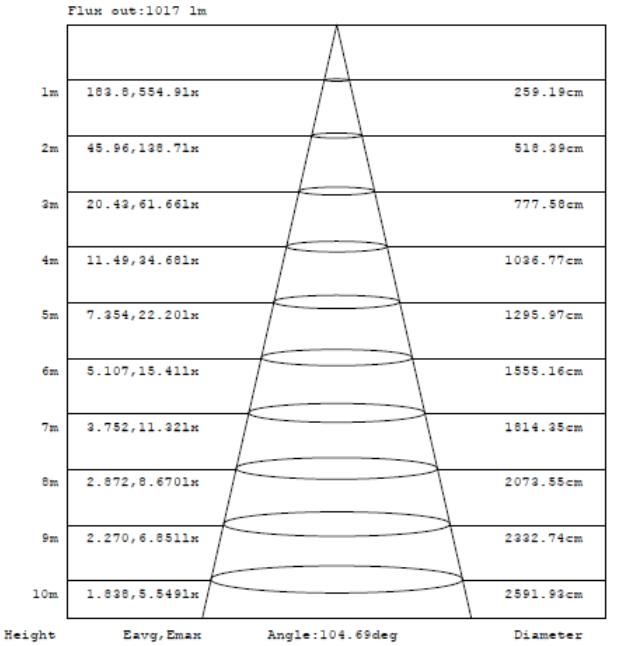

Note:The Curves indicate the illuminated area and the average illumination when the luminaire is at different distance.

LEDVANCE LLC
181 Ballardvale Street, Suite 203
Wilmington, MA 01887 USA
Phone: 1-800-LIGHTBULB (1-800-544-4828)
www.ledvanceUS.com

LEDVANCE is a registered trademark.
All other trademarks are those of their respective owners.
Specifications subject to change without notice.

SCAN TO FOLLOW US
ON SOCIAL MEDIA

© 2025 LEDVANCE LLC

www.ledvanceUS.com

LEDVANCE LUMINAIRES
STRING LIGHT

LEDVANCE LUMINAIRE SPECIFICATION DATA

Catalog #	Comments
Project	
Type	
Prepared by	

PERFORMANCE CLASS™

APPLICATION

The LEDVANCE String Lights are ideal for temporary lighting with a versatile and a durable design for indoor construction and job site applications to replace HID and incandescent lights.

BENEFITS & FEATURES

- Strong and durable construction with integrated hook for mounting
- Integrated 100ft power cord on with 10 lamp heads
- Linkable up to 40 lights
- IP65 rating ensures product durability
- Lasts up to 5× longer than HID lamps
- No warm-up time, instant on with full light output and stable color
- High CRI when compared to traditional lighting technologies
- Consumes up to 72% less energy than equivalent HID lamps while delivering same light output
- When linked, these strands utilize parallel wiring to sustain light
- Even if one lamp in the series becomes damaged or fails, all others will remain illuminated
- Replacement for 175W-400W HID applications
- Up to 123 LPW
- 5000K color temperature
- CRI 80+

ELECTRICAL

- 120 Vac 18 AWG cord with straight plug
- Power Factor > 90%
- THD < 20%

OPERATING TEMPERATURE

- -40°F to +104°F (-40°C to +40°C)

CERTIFICATIONS & LISTINGS

- ETLus listed to UL1598 standards
- RoHS
- FCC
- IP65: wet location

WARRANTY

- Standard 5 year lamp warranty
- NLB Trusted Warranty Program

RATED LIFE

- 50,000 hours (L_{70})

INSTALLATION

- Hang the lamp up with a pre-installed hook
- Lamp operates directly on line voltage, 120Vac
- For linking additional lamps, connect the power cable to the expansion outlet on the lamp.

ORDERING GUIDE

STRLIGHT	130	PLG	8	50	G2
PRODUCT NAME	WATTAGE	VOLTAGE	CRI	COLOR TEMP	GENERATION
STRLIGHT = Temporary String Light	130 = 130 Watts	PLG = 120V straight plug	8 = >80	50 = 5000K	G2 = 2nd generation

ORDERING INFORMATION

ITEM #	ORDERING ABBREVIATION	TOTAL WATTAGE (W)	LAMP WATTAGE* (W)	INPUT VOLTAGE (V)	DIM.	CRI	COLOR TEMP.	CONNECT.	CORD LENGTH (FT)	MAXIMUM LINKABILITY	TOTAL FIXTURE LUMENS (LM)	LPW	AVE. LIFE (HRS)	CASE QTY
66574	LEDSTRLIGHT130PLG850G2	130	13	120V	No	>80	5000K	Plug	100ft (10 lamps)	40 lights (4 sets)	16000	Up to 123	50,000	2

WATTAGE COMPARISON

TRADITIONAL SOURCE	TRADITIONAL SYSTEM WATTAGE	LED SYSTEM WATTAGE	ENERGY SAVINGS
175 W MH	210	130	38%
250 W MH	290	130	55%
250 W HPS	295	130	56%
250 W MH	290	130	55%
250 W HPS	295	130	56%
320 W MH	370	130	65%
400 W HPS	460	130	72%
400 W MH	450	130	71%

PHYSICAL INFORMATION

PRODUCT DESCRIPTION	LENGTH	DIAMETER
LEDSTRLIGHT (per lamp)	2.56" (65mm)	3.94" (100mm)
Cord Length	100ft	

H5-12LV-100FT

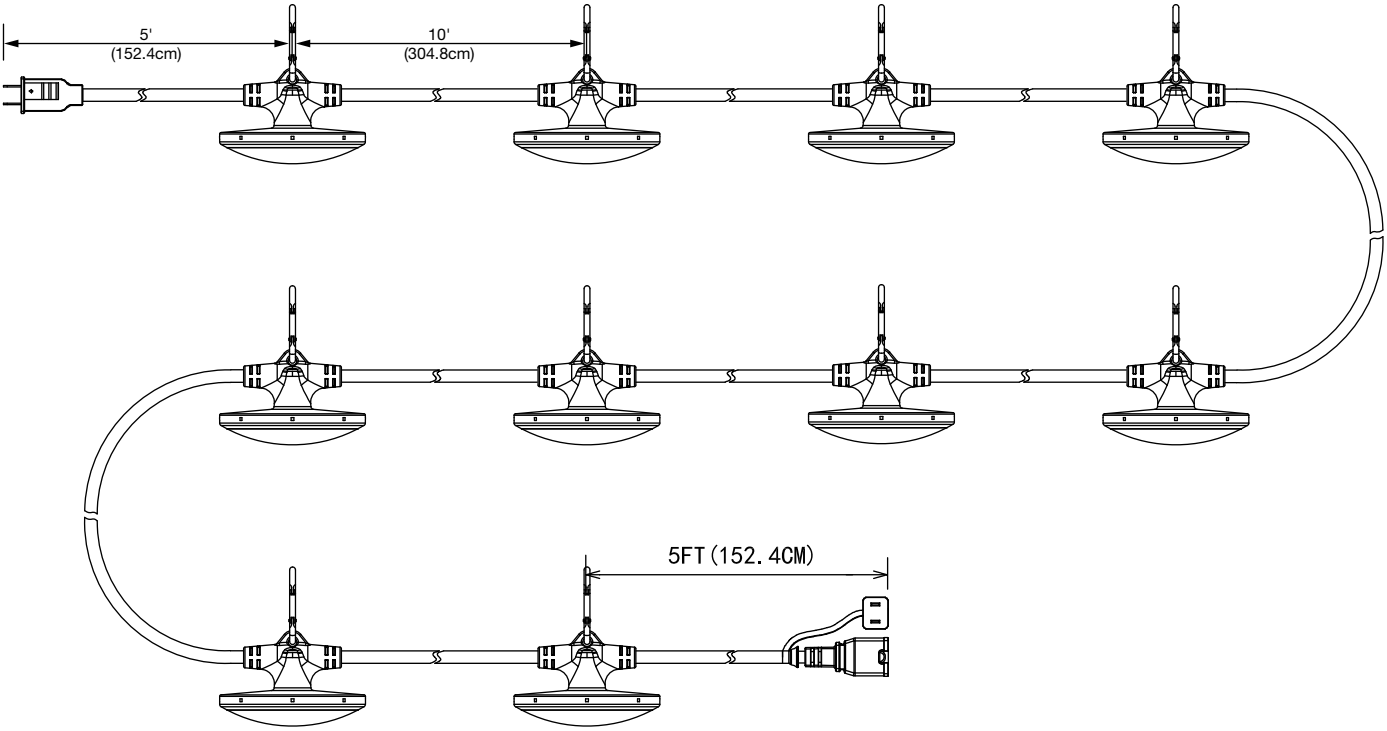

H5-12LV-SINGLE HEAD

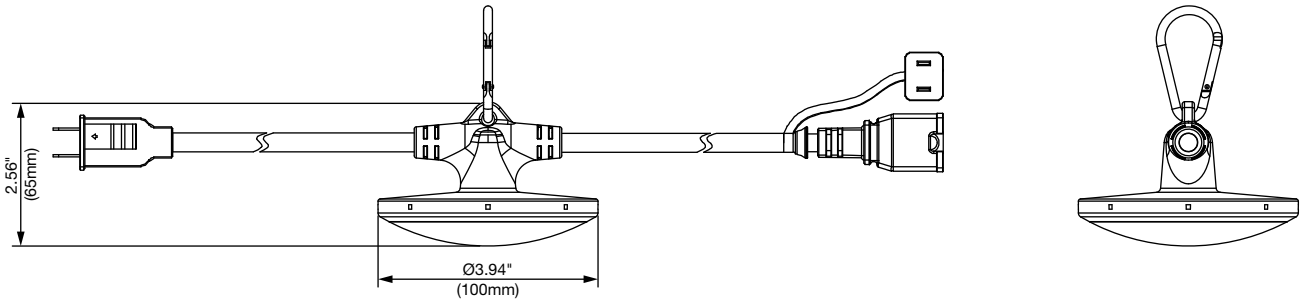

ADDITIONAL SPECIFICATIONS

- The LEDVANCE Performance Class™ String Light is an integrated LED fixture with no replaceable components
- Not intended for use in dimming applications

PHOTOMETRIC INFORMATION

LUMINOUS INTENSITY DISTRIBUTION / ILLUMINANCE INFORMATION

13W

LUMINOUS INTENSITY DISTRIBUTION DIAGRAM

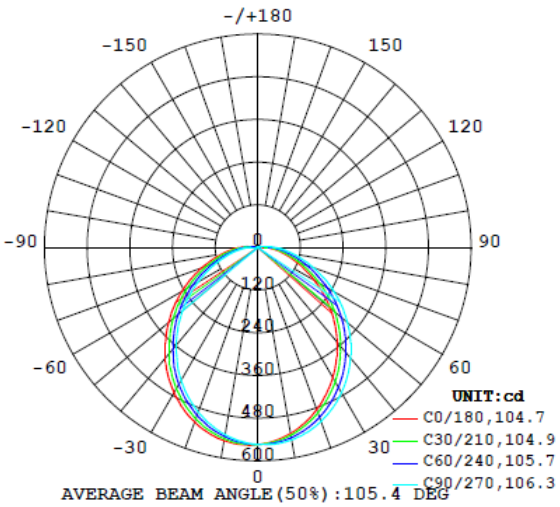

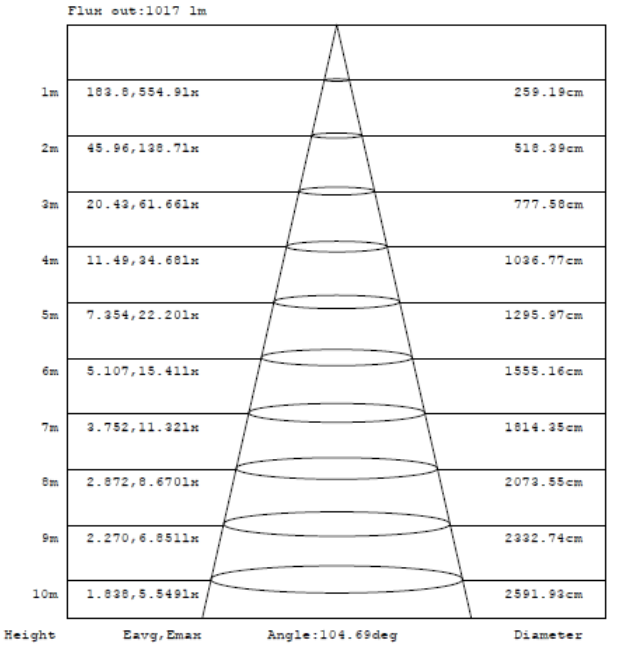

Note:The Curves indicate the illuminated area and the average illumination when the luminaire is at different distance.

LEDVANCE LLC
181 Ballardvale Street, Suite 203
Wilmington, MA 01887 USA
Phone: 1-800-LIGHTBULB (1-800-544-4828)
www.ledvanceUS.com

LEDVANCE is a registered trademark.
All other trademarks are those of their respective owners.
Specifications subject to change without notice.

SCAN TO FOLLOW US
ON SOCIAL MEDIA

© 2025 LEDVANCE LLC