ELLIOTT ELECTRIC SUPPLY
We Deliver...Lower Cost, Quality Products, & Personal Service
537 N 40th St
Springdale, AR 72762-0000
Phone: 4793612266
Fax: 4793619188



CFP2SY 2P DATACOM FACEPLATE

PANDUIT CORPORATION

Catalog Number	CFP2SY
Manufacturer	PANDUIT CORPORATION
Description	The Mini-Com® Stainless Steel Faceplate accepts two Mini-Com Modules. The faceplate is single gang and mounts to a NEMA standard single gang opening. The faceplate can be identified with an adhesive label and is made of impact resistant material to support installations in high traffic areas.
Weight per unit	0.1800 (lbs/each)
Product Category	Wiring Devices

Features

Material	Stainless Steel
Media	Yes

Material, Color, and Finish

Color	Metallic

Dimensions and Weight

Depth	0.75
Width	2.75

Descriptions

Description	2P DATACOM FACEPLATE
Long Description	The Mini-Com® Stainless Steel Faceplate accepts two Mini-Com Modules. The faceplate is single gang and mounts to a NEMA standard single gang opening. The faceplate can be identified with an adhesive label and is made of impact resistant material to support installations in high traffic areas.
Product Type	Mini-Com® Stainless Steel Faceplate, 2 Port
Extra Long Description	PAN CFP2SY Mini-Com® Stainless Stee

Manufacturer Information

Brand	PANDUIT
	Panduit Corporation
GTIN	00074983032860
Manufacturers Part Number	CFP2SY
Model	Mini-Com®
UPC	981002

Taxonomies, Classifications, and Categories

Type	FACEPLATE

537 N 40th St
Springdale, AR 72762-0000
Phone: 4793612266
Fax: 4793619188

Packaging

Carton	1
Package	10
Weight Per Each	0.1800 (lbs/each)

Uses, Certifications, and Standards

Application	NA
Standard	RoHS Compliant

Mini-Com® Stainless Steel Faceplates

PANDUIT®
SPECIFICATION SHEET

specifications

Stainless steel faceplates with labels shall be available in 2, 4, and 6-port single gang and various double gang configurations. Each faceplate shall accept copper, fiber, and AV modules that snap in and out without the use of tools. Faceplates shall have flush profile, and optional built in label pocket for easy identification. Stainless steel material shall be attached to a high impact ABS backing to provide a durable faceplate with brushed stainless steel finish.



Single Gang Sloped Recessed Faceplates with Labels	
2-port:	CFPSL2S
4-port:	CFPSL4S
Single Gang Faceplates with Labels*	
2-port:	CFPL2SY
4-port:	CFPL4SY
6-port:	CFPL6SY
Single Gang Faceplates without Labels*	
2-port:	CFP2SY
4-port:	CFP4SY
6-port:	CFP6SY
Double Gang Faceplates	
4-port with label:	CFPL4S-2GY
4-port without label:	CFP4S-2GY
6-port with label:	CFPL6S-2GY
Wall Board Adapters	
Single gang:	MWBA1

See table for labeling options.

*Four and six-port, single gang faceplates must be installed on a 1.9" wide (or wider) electrical back box.

technical information

Material:	304 grade stainless steel with satin finish is mounted on ABS backing and is suitable for hospital and laboratory environments; easy to clean
Mounting options:	Screw holes spaced for single and double gang openings; compatible with Panduit wall board adapters
Packaging:	Supplied with two or four 1" long, #6-32 slotted head screws; faceplates packaged one per bag, ten per box; labeled faceplates include label kit

key features and benefits

Durable	Impact resistant material supports installations in high traffic
Modular	Accepts all Mini-Com® Modules which snap in and out for easy moves, adds, and changes
Various port densities	Provides design flexibility
Flush mounting	Provides superior aesthetics
Label version available	Can be clearly identified with optional labels for port identification
Sloped recessed	Allows proper bend radius

applications

Mini-Com® Stainless Steel Faceplates are ideal for use in hospitals, laboratories, schools, and office environments. The faceplates are compatible with most standard single and double gang electrical boxes, wall board adapters, and raceway mounting brackets. These durable stainless steel faceplates are available with or without labels. Printable labels are available for compliance to the ANSI/TIA-606B labeling standard.

Mini-Com® Stainless Steel Faceplates

2, 4, and 6-port single gang faceplate with label

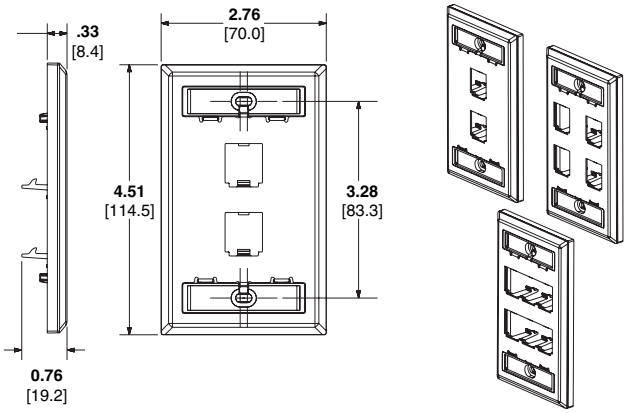

4 and 6-port double gang faceplate with label

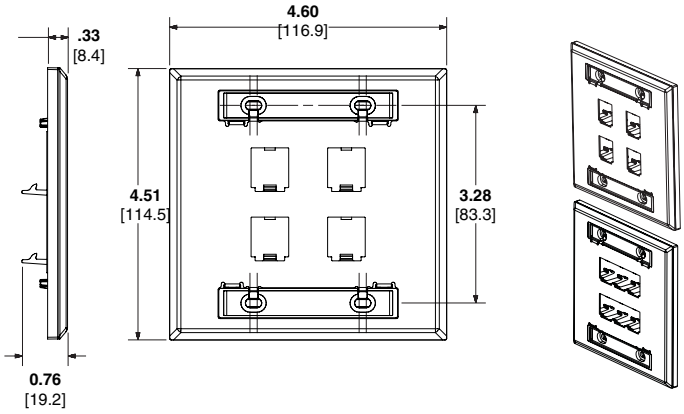

2, 4, and 6-port single gang faceplates

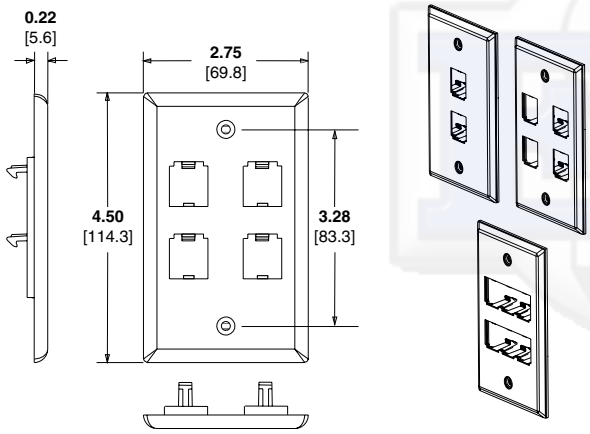

4 port double gang faceplates

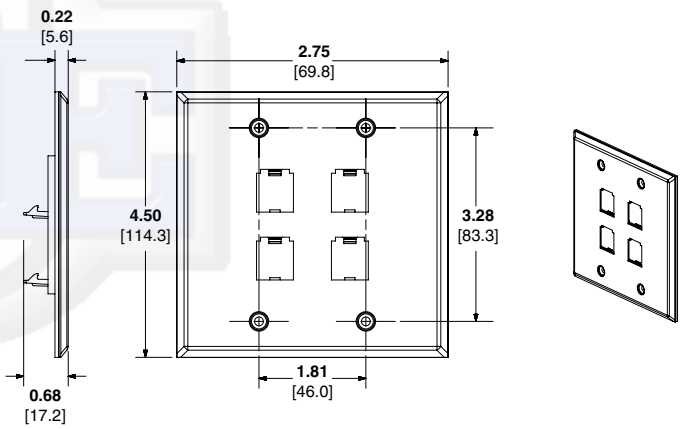

2 and 4-port sloped recessed single gang faceplate with label

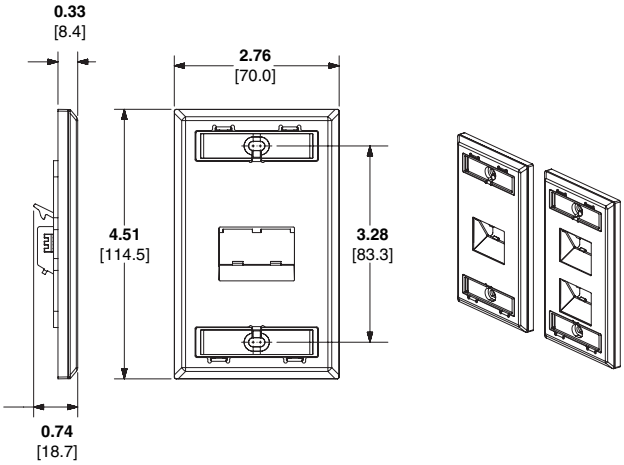

Dimensions are in inches. [Dimensions in brackets are metric].

labeling options

Part Number	Opening	Replacement Label	Laser/Ink jet	Panther LS8E
CFPSL2S	Single Gang	EFPK-XY (includes screws)	C195X040Y1J	C195X040Y1C
CFPSL4S				
CFPL2SY				
CFPL4SY				
CFPL6SY				
CFP2SY		N/A	C061X030FJJ	C061X030FJC
CFP4SY				
CFP6SY			C188X030FJJ	C188X030FJC
CFPL4S-2GY	Double Gang	EFPK102G-XY (includes screws)	C261X035Y1J	C288X040Y1C
CFPL6S-2GY			C061X030FJJ	C061X030FJC
CFP4S-2GY		N/A		

WORLDWIDE SUBSIDIARIES AND SALES OFFICES

PANDUIT US/CANADA
Phone: 800.777.3300

PANDUIT EUROPE LTD.
London, UK
Phone: 44.20.8601.7200

PANDUIT SINGAPORE PTE. LTD.
Republic of Singapore
Phone: 65.6305.7575

PANDUIT JAPAN
Tokyo, Japan
Phone: 81.3.6863.6000

PANDUIT LATIN AMERICA
Guadalajara, Mexico
Phone: 52.33.3777.6000

PANDUIT AUSTRALIA PTY. LTD.
Victoria, Australia
Phone: 61.3.9794.9020

For a copy of Panduit product warranties, log on to www.panduit.com/warranty

PANDUIT®

For more information
Visit us at www.panduit.com
Contact Customer Service by email: cs@panduit.com
or by phone: 800.777.3300

© 2022 Panduit Corp.
ALL RIGHTS RESERVED.
Printed in the U.S.A.
OTSP45--WW-ENG
4/2022