Electrical Sector Solutions

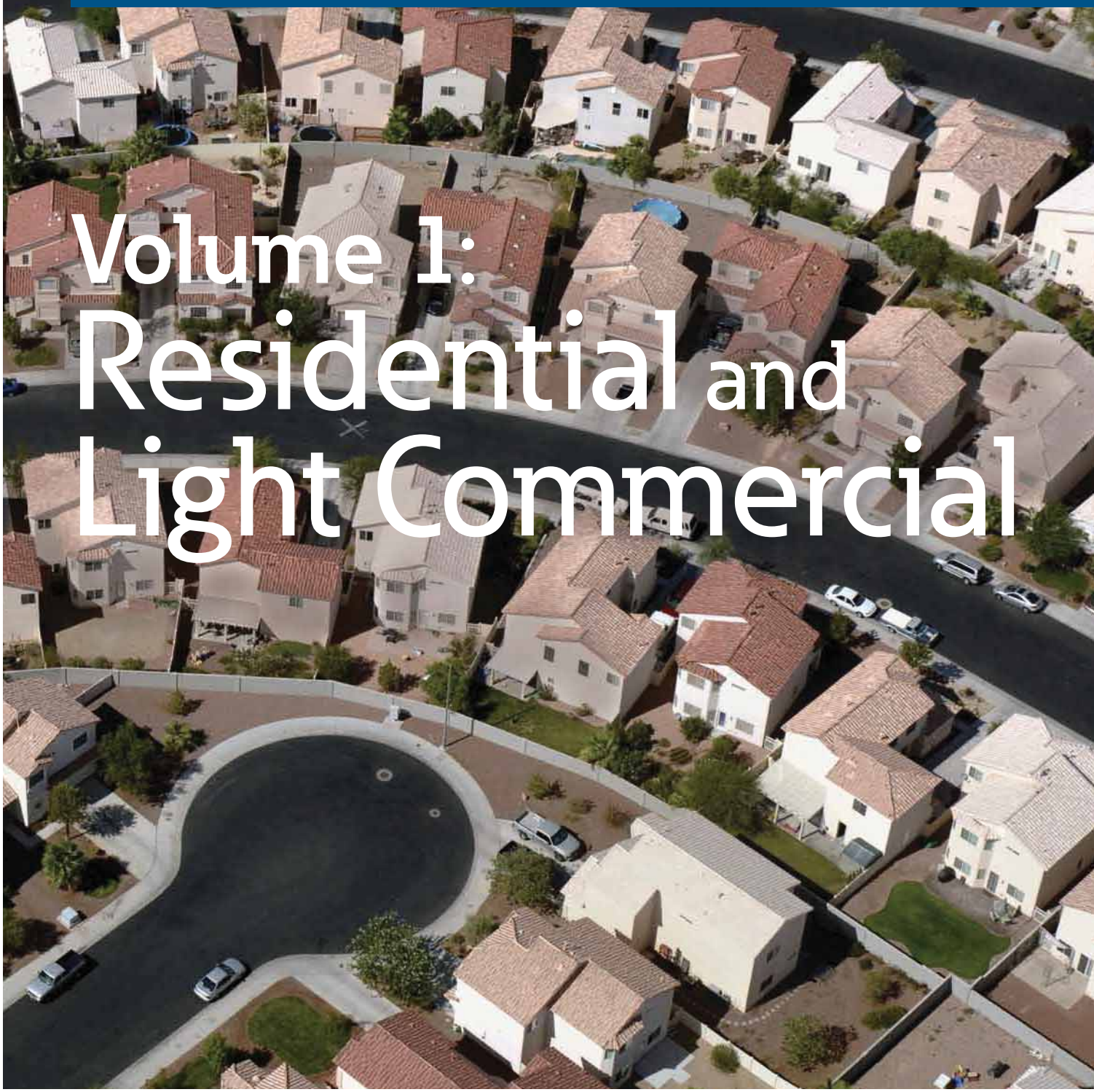

# Volume 1: Residential and Light Commercial

Powering Business Worldwide

# Volume 1—Residential and Light Commercial

1


Tab 1—Loadcenters and Circuit Breakers . . . . . V1-T1-1

Tab 2—Surge Protection . . . . . V1-T2-1

Tab 3—Residential Standby Backup Power Solutions . . . . . V1-T3-1

Tab 4—Metering Products . . . . . V1-T4-1

Tab 5—Power Pedestals . . . . . V1-T5-1

Tab 6—Air Conditioning Disconnects . . . . . V1-T6-1

Appendix 1—Eaton Terms & Conditions . . . . . V1-A1-1

Appendix 2—Catalog Parent Number Index . . . . . V1-A2-1

Appendix 3—Alphabetical Product Index . . . . . V1-A3-1

# Copyright

## Dimensions, Weights and Ratings

Dimensions, weights and ratings given in this catalog **are approximate and should not be used for construction purposes**. Drawings containing exact dimensions are available upon request. All listed product specifications and ratings are subject to change without notice. Photographs are representative of production units.

## Terms and Conditions

All prices and discounts are subject to change without notice. When price changes occur, they are published in Eaton's *Price and Availability Digest* (PAD). All orders accepted by Eaton's Electrical Sector are subject to the general terms and conditions as set forth in Appendix 1—Eaton Terms & Conditions.

## Technical and Descriptive Publications

This catalog contains brief technical data for proper selection of products. Further information is available in the form of technical information publications and illustrated brochures. If additional product information is required, contact your local Eaton Products Distributor, call **1-800-525-2000** or visit our website at **www.eaton.com**.

## Compliance with Nuclear Regulation 10 CFR 21

Eaton products are sold as commercial grade products not intended for application in facilities or activities licensed by the United States Nuclear Regulatory Commission for atomic purposes, under 10 CFR 21. Further certification will be required for use of these products in a safety-related application in any nuclear facility licensed by the U.S. Nuclear Regulatory Commission.

## WARNING

The installation and use of Eaton products should be in accordance with the provisions of the U.S. National Electrical Code® and/or other local codes or industry standards that are pertinent to the particular end use. Installation or use not in accordance with these codes and standards could be hazardous to personnel and/or equipment.

These catalog pages do not purport to cover all details or variations in equipment, nor to provide for every possible contingency to be met in connection with installation, operation or maintenance. Should further information be desired or should particular problems arise which are not covered sufficiently for the purchaser's purposes, the matter should be referred to the local Eaton Products Distributor or Sales Office. The contents of this catalog shall not become part of or modify any prior or existing agreement, commitment or relationship. The sales contract contains the entire obligation of Eaton's Electrical Sector. The warranty contained in the contract between the parties is the sole warranty of Eaton. Any statements contained herein do not create new warranties or modify the existing warranty.

**Copyright ©2015 Eaton, All Rights Reserved.**

Powering Business Worldwide

**Eaton is a global leader in power distribution, power quality, control and automation, and monitoring products.**

At Eaton, we believe a reliable, efficient and safe power system is the foundation of every successful enterprise. Through innovative technologies, cutting-edge products and our highly skilled services team, we empower businesses around the world to achieve a powerful advantage.

In addition, Eaton is committed to creating and maintaining powerful customer relationships built on a foundation of excellence. From the products we manufacture to our dedicated customer service and support, we know what's important to you.

## Solutions

Eaton takes the complexity out of power systems management with a holistic and strategic approach, leveraging our industry-leading technology, solutions and services. We focus on the following three areas in all we do:

- Reliability—maintain the appropriate level of power continuity without disruption or unexpected downtime
- Efficiency—minimize energy usage, operating costs, equipment footprint and environmental impact
- Safety—identify and mitigate electrical hazards to protect what you value most

## Using the Eaton Catalog Library

As we grow, it becomes increasingly difficult to include all products in one or two comprehensive catalogs. Knowing that each user has their specific needs, we have created a library of catalogs for our products that when complete, will contain 15 volumes. Since the volumes will continuously be a work in progress and updated, each volume will stand alone. Refer to our volume directory, MZ08100001E, for a quick glance of where to look for the products you need. The 15 volumes include:

- Volume 1—Residential and Light Commercial (CA08100002E)
- Volume 2—Commercial Distribution (CA08100003E)
- Volume 3—Power Distribution and Control Assemblies (CA08100004E)
- Volume 4—Circuit Protection (CA08100005E)
- Volume 5—Motor Control and Protection (CA08100006E)
- Volume 6—Solid-State Motor Control (CA08100007E)
- Volume 7—Logic Control, Operator Interface and Connectivity Solutions (CA08100008E)
- Volume 8—Sensing Solutions (CA08100010E)
- Volume 9—Original Equipment Manufacturer (CA08100011E)
- Volume 10—Enclosed Control (CA08100012E)
- Volume 11—Vehicle and Commercial Controls (CA08100013E)
- Volume 12—Aftermarket, Renewal Parts and Life Extension Solutions (CA08100014E)
- Volume 13—Counters, Timers and Tachometers (CA08100015E)—Available in electronic format only
- Volume 14—Fuses (CA08100016E)—Available in electronic format only
- Volume 15—Solar Inverters and Electrical Balance of System (CA08100018E)

These volumes are not all-inclusive of every product, but they are meant to be an overview of our product lines. For our full range of product solutions and additional product information, consult Eaton.com/electrical and other catalogs and product guides in our literature library. These references include:

- The Consulting Application Guide (CA08104001E)
- The Eaton Power Quality Product Guide (COR01FYA)

If you don't have the volume that contains the product or information that you are looking for, not to worry. You can access every volume of the catalog library at Eaton.com/electrical in the Literature Library.

By installing our Automatic Tab Updater (ATU), you can be sure you always have the most recent version of each volume and tab.

## Icons

### Green Leaf

Eaton Green Solutions are products, systems or solutions that represent Eaton benchmarks for environmental performance. The green leaf symbol is our promise that the solution has been reviewed and documented as offering exceptional, industry-leading environmental benefits to customers, consumers and our communities. Though all of Eaton's products and solutions are designed to meet or exceed applicable government standards related to protecting the environment, our products with the Green Leaf designation further provide "exceptional environmental benefit."

### Learn Online

When you see the Learn Online icon, go to Eaton.com/electrical and search for the product or training page. There you will find 100-level training courses, podcasts, webcasts or games and puzzles to learn more.

### Drawings Online

When you see the Drawings Online icon, go to Eaton.com/electrical and find the products page. There you will find a tab that includes helpful product drawings and illustrations.

## Contact Us

If you need additional help, you can find contact information under the Customer Care heading of Eaton.com/electrical.

# Loadcenters and Circuit Breakers



Residential Loadcenters and Breaker Family

## 1.1 Type CH Loadcenters and Circuit Breakers

Overview . . . . . V1-T1-2
Single-Phase . . . . . V1-T1-7
Three-Phase . . . . . V1-T1-12
CH Specialty Products . . . . . V1-T1-14
Spa Panels . . . . . V1-T1-14
Surge Panel . . . . . V1-T1-15
Plug-On Neutral Loadcenter . . . . . V1-T1-17
Type CH Renovation Loadcenter . . . . . V1-T1-18
Type CH Retrofit Interior Kits . . . . . V1-T1-19
Non-Metallic Loadcenter . . . . . V1-T1-21
CH Circuit Breakers . . . . . V1-T1-31

## 1.2 Type BR Loadcenters and Circuit Breakers

Overview . . . . . V1-T1-42
Single-Phase . . . . . V1-T1-48
Three-Phase . . . . . V1-T1-54
BR Specialty Products . . . . . V1-T1-57
BR Quick Connect Neutral Loadcenters . . . . . V1-T1-57
Spa Panels . . . . . V1-T1-58
Riser Panel . . . . . V1-T1-59
Type BR Renovation Loadcenter . . . . . V1-T1-60
Type BR Retrofit Interior Kits . . . . . V1-T1-73
BR Circuit Breakers . . . . . V1-T1-76

## 1.3 Loadcenter Interiors/OEM Loadcenters

Product Description . . . . . V1-T1-89
Standards and Certifications . . . . . V1-T1-90
Product Selection . . . . . V1-T1-90

## 1.4 Enclosed Breakers

Product Overview . . . . . V1-T1-94
Product Description . . . . . V1-T1-94
Standards and Certifications . . . . . V1-T1-94
Product Selection . . . . . V1-T1-95
Dimensions . . . . . V1-T1-95

## 1.5 Classified Circuit Breakers

Product Description . . . . . V1-T1-96
Product Selection . . . . . V1-T1-97
Accessories . . . . . V1-T1-99
Technical Data . . . . . V1-T1-99
Wiring Diagrams . . . . . V1-T1-100


Learn Online

**Eaton Type CH Convertible Family**

## Contents


| *Description* | *Page* |
|---|---|
| Overview | |
| Product Description | **V1-T1-3** |
| Features, Benefits and Functions | **V1-T1-3** |
| Standards and Certifications | **V1-T1-4** |
| Catalog Number Selection | **V1-T1-6** |
| Product Selection | **V1-T1-7** |
| Technical Data and Specifications | **V1-T1-29** |
| CH Specialty Products | **V1-T1-14** |
| CH Loadcenter Options and Accessories | **V1-T1-22** |
| CH Circuit Breakers | **V1-T1-31** |


# Overview

## Product Selection Guide

### CH Loadcenters

| Description | |
|---|---|
| **Service** | |
| Single-phase, three-wire, 120/240 Vac | Three-phase, four-wire, 208Y/120 Vac |
| Three-phase, three-wire, 240 V corner grounded delta | Three-phase, three-wire, 240 Vac delta |
| **Short-Circuit Current Rating** | |
| 10 kAIC: All single- and three-phase loadcenters 40–400 A, 2–42 circuits except when series ratings are applied | 35 kAIC available on convertible units using CSH main breaker |
| 25 kAIC: All factory-installed main breakers single-phase loadcenters rated 150–225 A using Type CSR main breakers | 42 and 100 kAIC are available on some styles: single-phase and three-phase |
| **Main Breaker/Main Lug Loadcenters** | |
| Single-phase | Three-phase |
| Main breaker: 100, 125, 150, 200, 225, 400 A | Main breaker: 150, 200, 225, 300, 400 A |
| Main lugs: 40, 70, 125, 150, 200, 225, 400 A | Main lugs: 125, 150, 200, 225, 400 A |
| **Convertible Loadcenters** | |
| Main breaker or main lugs: single-phase up to 225 A | |
| **Branch Breakers** | |
| Type CH: 10–150 A. Single-, two- and three-pole. Selected amperages available in shunt trip, HACR and switching duty | Type CH-AFCI arc fault circuit interrupter |
| Ground fault circuit interruptors: 15–60 A | Type CHP: 10–125 A. Single-, two- and three-pole. three-position commercial trip |
| Type CH-HID: 15–30 A. Single-, two- and three-pole | Selected amperages available in HACR switching duty |
| CH-HM high magnetic | Type CHP-HID: 15–30 A. Single-, two- and three-pole |
| CH-M50 high ambient | Type CHP-GFCI: 15–30 A. Single-pole ground fault breakers |
| **Enclosures** | |
| NEMA® Type 1 indoor | NEMA Type 3R outdoor |
| **Loadcenter and Breaker Accessories** | |
| Branch circuit breaker: | Complete line of ground bar kits 5, 10, 14 and 21 circuits, some with additional #2/0 lugs |
| Auxiliary components | Each terminal will accommodate: (3) #14–#10 Cu/Al or (1) #14–#4 Cu/Al |
| Hold-down kits | Sub-feed lugs 125, 150 A—two- and three-pole |
| Handle ties | Shunt trips |
| Lockoffs | Universal rainproof conduit hubs Group One: 3/4, 1, 1-1/4, 1-1/2, 2 inches (19.1, 25.4, 31.8, 38.1, 50.8 mm) Group Two: 2, 2-1/2, 3 inches (50.8, 63.5, 76.2 mm) |
| Lockdogs | Adapter plate |
| **Bussing** | |
| Silver flash plated copper bus is a standard feature | |

## Product Description

Loadcenters are enclosures specifically designed to house the branch circuit breakers and wiring required to distribute power to individual circuits. They contain either a main breaker when used at the service entrance point or a main lug when used as a sub-panel to add circuits to existing service. The main breaker protects the main entire panel and can be used as a service disconnect. The branch breakers protect the wires leading to individual electrical loads such as fixtures and outlets.

## Features, Benefits and Functions

### *Loadcenter Construction*

Eaton's Type CH loadcenters feature silver flash plated copper bus in all interiors. Stabs are rated 200 A throughout the CH line. Therefore, the sum of the handle ratings connected to any one stab is limited to 200 A maximum. NEMA 1 boxes are manufactured from cold rolled 16 gauge sheet steel. Raintight boxes are manufactured from galvanized steel. All boxes and trims are finished using an electrostatic powder coat, baked urethane paint process.

### *Neutrals*

Eaton Type CH loadcenters feature two types of neutrals:

### *Insulated/Bondable Split Neutral*

Panels are supplied with split insulated neutrals with an insulated cross strap. For service entrance applications, the neutral must be bonded by using the bonding strap supplied with the panel. For non-service entrance (sub-panel) applications, the panel may be installed with the bonding strap not connected to the neutral. Separate ground bars must be used on non-service entrance panels.

### *Insulated/Bondable Single Neutral*

Panels are supplied with a single insulated neutral. For service entrance applications, all that is required to bond the neutral is to loosen the bonding screw and the neutral screw directly beside it, insert the bonding strap into the neutral bar, and re-tighten both connections. The single neutral can be moved by the contractor to the other side of the panel, if desired. When used as a service entrance panel, unused neutral connections may be used for the termination of equipment grounds. For non-service entrance (sub-panel) applications, the panel may be installed with the bonding strap not connected to the neutral. Separate ground bars must be used on non-service entrance panels.

### *Inboard Plug-On Neutral*

Code changes and higher safety standards are leading to more arc fault circuit interrupter (AFCI) installations. With the electrical contractor in mind, Eaton has revolutionized the way Combination AFCIs are installed with the Plug-on Neutral line of loadcenters and breakers. This unique product solution enables the contractor to connect the breaker directly to the neutral bar, eliminating the need for wiring a pigtail.

### *Grounds*

In service entrance applications where the neutral is bonded, unused neutral holes may be used for terminating ground conductors. In sub-feed panels, the neutral must be isolated (non-bonded), and ground wires must be terminated on a separate ground bar.

The insulated/bondable single/split neutral panels have sufficient terminations for both ground and neutral conductors. The insulated/bondable single split neutral panels are supplied with a separate factory-installed ground bar if the catalog number contains a "G." If not, a separate ground bar should be installed. Insulated/Bondable Single Neutral panels are supplied without a ground bar (unless otherwise noted), and ground bar kits, if needed, must be purchased separately.

1

## Standards and Certifications

### *UL® Listings*

All Eaton Type CH loadcenters are listed under UL File E8741.

### *Neutral and Ground Terminals*

The standard terminals on grounds and neutrals are rated to accept (3)—#14–#10 Cu/Al or (1)—#14–4 wires. For larger cables, add-on neutral lugs may be ordered from the Accessories.

**Note:** NEC® allows only one current carrying conductor per hole on neutrals unless otherwise noted.

### *Bottom-Fed Loadcenters*

When the power cable is brought into the loadcenter from below the panel; then the main lug panels, and single-phase, 225 A and below, loadcenters can be rotated 180 degrees to allow straight-in wiring of power cables to the main terminals. Because the CSR main circuit breaker handle operates horizontally, the orientation of the main circuit breaker handle is consistent with the requirements of NEC Article 240.81.

### *Gutter Splicing*

Loadcenters are not UL listed as wiring troughs. Therefore, gutter splicing of riser cables to tap off to the main device is not permitted. Refer to NEC Article 373.8.

### *Fire Rating*

Due to the numerous openings in both loadcenter boxes and trims, they should not be mounted in firewalls. There is no approval method for sealing the enclosures for this application.

### *Date Code*

The date of manufacture of each loadcenter is printed on the outside of the carton as well as inside the loadcenter. On the carton, the date code is printed on the end carton label. In the loadcenter, the date code is located on the small white label located on the right side wall (with the main device on top).

The date code is in the following format: F # # # &. The "F" is the numeric code for the Lincoln, IL plant, and the three numbers are the year and week of manufacture, e.g., 023. The "&" sign at the end signifies the decade of the 2000s. The "!" at the end signifies the decade of the 2010s. Therefore, the date code F023& would indicate that the product was manufactured in the 23rd week of 2000. The 1980s are represented by a "+" sign and the 1990s are represented by a "=" at the end of the code.

### *Plug-On Type CH Breakers*

Quick-make, quick-break switch mechanism combined with inverse time element tripping operation and trip-free handle design. Type CH circuit breakers trip to the OFF position eliminating nuisance callbacks. The thermal-magnetic trip curve avoids nuisance tripping on mild overloads while reacting almost instantaneously to severe short-circuit conditions. CHF breakers include a 'trip flag' to differentiate between a tripped breaker and one that has been turned off. Multipole breakers have internal common trip connection to operate all poles simultaneously. Handles are marked with ON-OFF indication and ampere rating of the breaker. Type CH breakers meet UL Standard 489, NEMA standards, and Federal Spec Classification W-C 375 b/Gen. They are UL listed under File Number E11713, E8741, E3624 and E51287: and CSA® certified file number LR87196, except Type CHT breakers.

### *Type CH Circuit Breaker Ratings*

Single- and double-pole CH breakers rated 15 and 20 A have low instantaneous magnetic trip levels. The 15 and 20 A breakers with "HM" suffix have high magnetic trip settings recommended for circuits with inherently high inrush currents. All Type CH breakers are marked for heating, air conditioning and refrigeration (HACR) equipment application. Single-pole 15–20 A breakers are also suitable for switching duty (SWD). Shunt trip coils operate on 120 Vac and require one additional pole space per breaker.

Listed

## Type CH Loadcenter

Extra 1.5 inch Knockout (38.1 mm)
- Larger knockout provides easier installation and time savings for renovation installations

Top or Bottom Feed
- Straight-in wiring saves labor and material
- One panel for either top or bottom applications

2/0 Lug
- Easily removable and can be installed in any location on the neutral bar

Commercial Grade Main Breaker
- 25 kAIC series rated main breaker in 150 A–225 A load-centers. 35, 42 and 100 kAIC series ratings are available
- Optional convertible design—reduces inventory requirements

One Piece Silver-Flashed Copper Bus
- Provides superior conductivity, corrosion resistance and durability

Drywall Marking on Enclosure
- Indicates proper mounting depth for flush applications

Steel Backpan
- Provides solid and reliable breaker mounting—single piece design for stability and durability

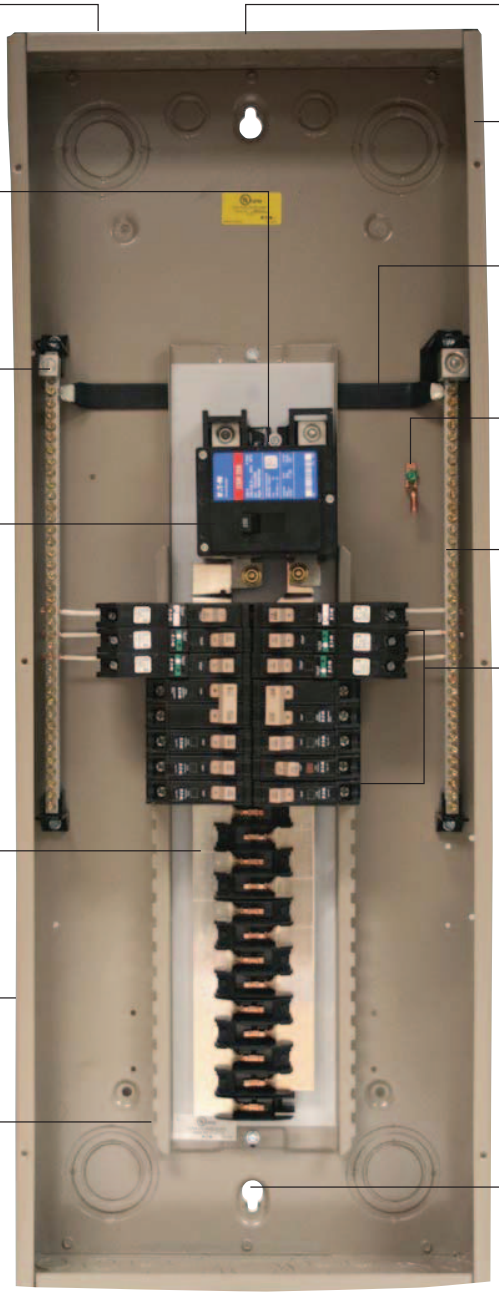

"Tangential" Center Knockout
- Easier installation for conduit applications

Unique Sandalwood Finish
- Aesthetically appealing, scratch-resistant powder coating

Neutral Bus (Strap)
- Easily removable for sub-panel applications

Bonding Z-Strap
- Provides easy field conversion for service entrance applications

Twin Neutral Bars
- Minimum 150% neutral capacity

Type CHF AFCI/GFCI/Thermal-Magnetic Breakers
- Advanced electronics effectively reduce nuisance tripping
- CHF AFCI breakers have a standard diagnostic LED indicating 1 of 7 trip codes
- Mechanical flag for trip indication (on thermal-magnetic AFCI and GFCI)
- All CH breakers provide industry exclusive 2-position handle with simple 1 step reset

Single Keyhole Mounting
- One keyhole at the top and bottom provides easier mounting and leveling

***Warranty***

The minimum warranty for residential loadcenters, breakers and surge protection devices shall be as follows:

- Lifetime loadcenter warranty
- Lifetime warranty on CH circuit breakers
- Lifetime warranty on CHSPT2ULTRA including $75,000 connected equipment warranty
- 1-year warranty on plug-in surge protective device (CHSA)

1

## Catalog Number Selection

### Loadcenters 100–225 A and 12–42 Circuits

**CH 42 B _ _ 200 _ K**

**LC Type**
Type CH 3/4-inch (19.1 mm) branch circuit breakers

**Number of Circuits**
Selection circuits

| | |
|---|---|
| 2 | 20 |
| 4 | 22 |
| 8 | 24 |
| 12 | 28 |
| 14 | 30 |
| 16 | 32 |
| 18 | 42 |

**Main Device**
- **L** = Main lug only
- **B** = Main breaker
- **N** = Convertible
- **H** = High AIC main breaker

**Construction**
- **Blank** = Standard
- **PN** = Plug-on neutral

**Phases**
- **Blank** = Single-phase
- **3** = Three-phase

**Bus Amperes**

| | |
|---|---|
| 40 | 150 |
| 70 | 200 |
| 100 | 225 |
| 125 | |

**Box Sizes**
- **B**
- **C**
- **D**
- **E**
- **G**
- **J**
- **K**
- **L**
- **R** = Outdoor (no cover)

**Accessories**
- **Blank** = Standard
- **EC** = Surge ready
- **SUR** = Surge factory installed

### Indoor Covers Ordered Separately

**CH _ 8 K F _**

**Type CH**

**Factory Options**
- **Blank** = Standard
- **SUR** = Surge/surge ready

**Loadcenter Cover Series**

**Box Size**
Indicated in loadcenter catalog number

**Mounting**
- **F** = Combination flush/surface
- **S** = Surface

**Accessories**
- **Blank** = Standard
- **M** = Mechanical interlock

**Note:** All combinations are not valid, refer to the catalog section.

## Product Selection

### *Single-Phase—Main Circuit Breaker Loadcenters—10/25 kAIC*

**CH42B200K**

### Single-Phase Three-Wire—120/240 Vac—Insulated/Bondable Split Neutral (Unless Otherwise Noted)

| Main Breaker Type | Main Ampere Rating | Maximum Number 3/4-Inch (19.1 mm) of Poles | Enclosure Type | Box Size | Wire Size Range Cu/Al 60 °C or 75 °C for Main Breaker | Loadcenter ①② Catalog Number | Loadcenter Cover Catalog Number Combination ③ | Surface |
|---|---|---|---|---|---|---|---|---|
| CH 10 kAIC | 100 | 14 | Indoor | B | #6–1/0 | **CH14B100B** ④ | **CH8BF** | **CH8BS** |
| | | 14 | Outdoor | B | #6–1/0 | **CH14B100R** ⑤ | — | — |
| | | 18 | Indoor | C | #6–1/0 | **CH18B100C** ④ | **CH8CF** | **CH8CS** |
| | | 18 | Outdoor | C | #6–1/0 | **CH18B100R** ⑤ | — | — |
| | | 22 | Indoor | C | #6–1/0 | **CH22B100C** ④ | **CH8CF** | **CH8CS** |
| | | 22 | Outdoor | C | #6–1/0 | **CH22B100R** ⑤ | — | — |
| | | 30 | Indoor | D | #6–1/0 | **CH30B100D** ④ | **CH8DF** | **CH8DS** |
| | | 30 | Outdoor | D | #6–1/0 | **CH30B100R** ⑤ | — | — |
| | 125 | 22 | Indoor | C | #6–1/0 | **CH22B125C** ④ | **CH8CF** | **CH8CS** |
| | | 22 | Outdoor | C | #6–1/0 | **CH22B125R** ⑤ | — | — |
| | | 30 | Indoor | D | #6–1/0 | **CH30B125D** ④ | **CH8DF** | **CH8DS** |
| | | 30 | Outdoor | D | #6–1/0 | **CH30B125R** ⑤ | — | — |
| CSR 25 kAIC | 150 | 8 | Outdoor | E | #2–300 kcmil | **CH8B150RF** ⑥ | — | — |
| | | 24 | Indoor | E | #2–300 kcmil | **CH24B150E** ④ | **CH8EF** | **CH8ES** |
| | | 24 | Outdoor | E | #2–300 kcmil | **CH24B150R** ⑤ | — | — |
| | | 32 | Indoor | J | #2–300 kcmil | **CH32B150J** ④ | **CH8JF** | **CH8JS** |
| | | 32 | Outdoor | J | #2–300 kcmil | **CH32B150R** ⑤ | — | — |
| | 200 | 8 | Outdoor | E | #2–300 kcmil | **CH8B200RF** ⑥ | — | — |
| | | 24 | Indoor | E | #2–300 kcmil | **CH24B200E** ④ | **CH8EF** | **CH8ES** |
| | | 24 | Outdoor | E | #2–300 kcmil | **CH24B200R** ⑤ | — | — |
| | | 32 | Indoor | J | #2–300 kcmil | **CH32B200J** ④ | **CH8JF** | **CH8JS** |
| | | 32 | Outdoor | J | #2–300 kcmil | **CH32B200R** ⑤ | — | — |
| | | 42 | Indoor | K | #2–300 kcmil | **CH42B200K** ④ | **CH8KF** | **CH8KS** |
| | | 42 | Outdoor | K | #2–300 kcmil | **CH42B200R** ⑤ | — | — |
| | 225 | 32 | Indoor | J | #2–300 kcmil | **CH32B225J** ④ | **CH8JF** | **CH8JS** |
| | | 32 | Outdoor | J | #2–300 kcmil | **CH32B225R** ⑤ | — | — |
| | | 42 | Indoor | K | #2–300 kcmil | **CH42B225K** ④ | **CH8KF** | **CH8KS** |
| | | 42 | Outdoor | K | #2–300 kcmil | **CH42B225R** ⑤ | — | — |
| DK 10 kAIC | 300 | 42 | Indoor | PM | (2) 3/0–250 kcmil | **CH42PM300** | **CH7PMF** ⑦ | **CH7PMS** |
| | 400 | 42 | Indoor | PM | (2) 3/0–250 kcmil | **CH42PM400** | **CH7PMF** ⑦ | **CH7PMS** |

***Notes***

① All main circuit breaker loadcenters are listed for use as service entrance equipment.
② Ground bar kits priced separately. See **Page V1-T1-25**.
③ Combination style covers may be used in surface or flush applications.
④ Can be top or bottom fed by rotating the enclosure and trim 180 degrees.
⑤ Rainproof panels are furnished with hub closure plates. For rainproof hubs, refer to **Page V1-T1-25**.
⑥ Panel includes #4–300 kcmil feed-through lugs.
⑦ This cover is for flush applications only (not combination).

Box sizes **Pages V1-T1-27** and **V1-T1-28**.

### *Single-Phase—High Interrupting Rated Main Circuit Breaker Loadcenters—100 kAIC*

## Single-Phase Three-Wire—120/240 Vac—Insulated/Bondable Split Neutral

| Main Breaker Type | Main Ampere Rating | Maximum Number 3/4-Inch (19.1 mm) Poles | Enclosure Type | Box Size | Wire Size Range Cu/Al 60 °C or 75 °C for Main Breaker | Loadcenter ① Catalog Number | Loadcenter Cover Catalog Number Combination ② | Surface |
|---|---|---|---|---|---|---|---|---|
| CHB4 100 kAIC ⑤ | 100 | 32 | Indoor | L | #6–1/0 | **CH32H100L** ③ | **CH8LF** | **CH8LS** |
| | | 32 | Outdoor | L | #6–1/0 | **CH32H100R** ④ | — | — |
| CHH 100 kAIC ⑤ | 150 | 32 | Indoor | L | #2/0–300 kcmil | **CH32H150L** | **CH8LF** | **CH8LS** |
| | | 32 | Outdoor | L | #2/0–300 kcmil | **CH32H150R** ④ | — | — |
| | 200 | 32 | Indoor | L | #2/0–300 kcmil | **CH32H200L** | **CH8LF** | **CH8LS** |
| | | 32 | Outdoor | L | #2/0–300 kcmil | **CH32H200R** ④ | — | — |
| | | 42 | Indoor | L | #2/0–300 kcmil | **CH42H200L** | **CH8LF** | **CH8LS** |
| | | 42 | Outdoor | L | #2/0–300 kcmil | **CH42H200R** ④ | — | — |
| | 225 | 42 | Indoor | L | #2/0–300 kcmil | **CH42H225L** | **CH8LF** | **CH8LS** |
| | | 42 | Outdoor | L | #2/0–300 kcmil | **CH42H225R** ④ | — | — |

***Notes***

① All main circuit breaker loadcenters are listed for use as service entrance equipment.
② Combination style covers may be used in surface or flush applications.
③ Loadcenter can be top or bottom fed by rotating the enclosure and trim 180 degrees.
④ Rainproof panels are furnished with hub closure plates. For rainproof hubs, refer to **Page V1-T1-25**.
⑤ Series rated for 100 kAIC with all Types CH, CHT and CHP breakers.

***Single-Phase—Main Lug Loadcenters***

## Single-Phase Three-Wire—120/240 Vac—Insulated/Bondable Single Neutral

| | Main Ampere Rating | Maximum Number 3/4-Inch (19.1 mm) Space | Poles | Enclosure Type | Type of Trim (Included) | Box Size | Wire Size Range Cu/Al 60 °C or 75 °C for Main Lugs | Loadcenter Catalog Number |
|---|---|---|---|---|---|---|---|---|
| **Surface Outdoor** | 40 | 2 | 4 ① | Indoor | Surface (no door) | 5 | #14–6 | **CH2L40SP** ②③ |
| | | 2 | 4 ① | Outdoor | — | 5R | #14–6 | **CH2L40RP** ②③④ |
| | | 2 | 4 ① | Indoor | Flush (no door) | 5 | #14–6 | **CH2L40FP** ②③ |
| **Flush Outdoor** | 70 | 2 | 4 ① | Indoor | Surface (no door) | 5 | #14–2 | **CH2L70SP** ②③ |
| | | 2 | 4 ① | Outdoor | — | 5R | #14–2 | **CH2L70RP** ②③④ |
| | | 2 | 4 ① | Indoor | Flush (no door) | 5 | #14–2 | **CH2L70FP** ②③ |
| **Surface (No Door)** | 125 | 2 | 4 ① | Indoor | Surface (no door) | 6 | #14–1/0 | **CH2L125SP** ②③ |
| | | 2 | 4 ① | Outdoor | — | 6R | #14–1/0 | **CH2L125RP** ②③④ |
| | | 2 | 2 | Outdoor | — | — | #14–1/0 | **CH2L125RSE2P** ④⑤⑥ |
| | | 2 | 4 ① | Indoor | Flush (no door) | 6 | #14–1/0 | **CH2L125FP** ②③ |
| | | 4 | 8 ① | Indoor | Surface (no door) | 7 | #14–1/0 | **CH4L125SP** ②⑦ |
| | | 4 | 8 ① | Outdoor | — | 7R | #14–1/0 | **CH4L125RP** ②④⑦ |
| **Flush (No Door)** | | 4 | 8 ① | Indoor | Flush (no door) | 7 | #14–1/0 | **CH4L125FP** ②⑦ |
| | | 6 | 12 ① | Outdoor | — | 6R | #14–1/0 | **CH6L125R** ②⑥⑦ |
| | | 8 | 16 ① | Indoor | Surface (no door) | 7 | #6–1/0 | **CH8L125SP** ②⑧ |
| | | 8 | 16 ① | Outdoor | — | 7R | #6–1/0 | **CH8L125RP** ②⑥⑦ |
| | | 8 | 16 ① | Indoor | Flush (no door) | 7 | #6–1/0 | **CH8L125FP** ②⑧ |
| **Outdoor** | | | | | | | | |

***Notes***

① Requires the use of Type CHT breakers.

② Ground bar kits priced separately, see **Page V1-T1-25**.
– For 2/4 and 6/12 circuit loadcenters, use Type GBK5 or GBK520 ground bar
– For 4/8 and 8/16 circuit loadcenters, use Type GBK10 ground bar
– Ground bars mount to the left side wall of the enclosure for the 4/8, 6/12 and 8/16 circuit loadcenters

③ Suitable for use as service equipment when not more than two service disconnecting mains are provided or when not used as a lighting and appliance panelboard (see Article 408.34 of the NEC).

④ Rainproof panels are furnished with hub closure plates. For rainproof hubs, refer to **Page V1-T1-25**.

⑤ For use as service entrance applications only.

⑥ Neutral/ground holes (6) #14–6 and (3) #14–2/0 AWG Cu/Al.

⑦ Suitable for use as service equipment when not more than two service disconnecting mains are provided or when not more than six service disconnecting mains are provided and when not used as a lighting and appliance panelboard (see Article 408.34 of the NEC).

⑧ Suitable for use as service equipment when a main breaker is used or when not more than six service disconnecting mains are provided and when not used as a lighting and appliance panelboard (see Article 408.34 of the NEC).

Box sizes **Pages V1-T1-27** and **V1-T1-28**.

CH42L225G

## Single-Phase Three-Wire—120/240 Vac—Insulated/Bondable Split Neutral—Factory-Installed Ground Bar

| Main Ampere Rating | Maximum Number 3/4-Inch (19.1 mm) Poles | Enclosure Type | Box Size | Wire Size Range Cu/Al 60 °C or 75 °C for Main Lugs | Loadcenter Catalog Number | Loadcenter Cover Catalog Number Combination | Loadcenter Cover Catalog Number Surface |
|---|---|---|---|---|---|---|---|
| 125 | 12 | Indoor | B | #6–2/0 | **CH12L125B** ① | **CH8BF** | **CH8BS** |
| | 12 | Outdoor | B | #6–2/0 | **CH12L125R** ①② | — | — |
| | 16 | Indoor | B | #6–2/0 | **CH16L125B** ① | **CH8BF** | **CH8BS** |
| | 16 | Outdoor | B | #6–2/0 | **CH16L125R** ①② | — | — |
| | 20 | Indoor | C | #6–2/0 | **CH20L125C** ① | **CH8CF** | **CH8CS** |
| | 20 | Outdoor | C | #6–2/0 | **CH20L125R** ①② | — | — |
| | 24 | Indoor | C | #6–2/0 | **CH24L125C** ① | **CH8CF** | **CH8CS** |
| | 24 | Outdoor | C | #6–2/0 | **CH24L125R** ①② | — | — |
| 150 | 24 | Indoor | D | #4–300 kcmil | **CH24L150D** ① | **CH8DF** | **CH8DS** |
| | 24 | Outdoor | D | #4–300 kcmil | **CH24L150R** ②③ | — | — |
| | 32 | Indoor | D | #4–300 kcmil | **CH32L150D** ① | **CH8DF** | **CH8DS** |
| | 32 | Outdoor | D | #4–300 kcmil | **CH32L150R** ②③ | — | — |
| 200 | 12 | Indoor | D | #4–300 kcmil | **CH12L200D** ① | **CH8DF** | **CH8DS** |
| | 12 | Outdoor | D | #4–300 kcmil | **CH12L200R** ②③ | — | — |
| | 16 | Indoor | D | #4–300 kcmil | **CH16L200D** ① | **CH8DF** | **CH8DS** |
| | 16 | Outdoor | D | #4–300 kcmil | **CH16L200R** ②③ | — | — |
| 225 | 24 | Indoor | D | #4–300 kcmil | **CH24L225D** ① | **CH8DF** | **CH8DS** |
| | 24 | Outdoor | D | #4–300 kcmil | **CH24L225R** ②③ | — | — |
| | 32 | Indoor | D | #4–300 kcmil | **CH32L225D** ① | **CH8DF** | **CH8DS** |
| | 32 | Outdoor | D | #4–300 kcmil | **CH32L225R** ②③ | — | — |
| | 42 | Indoor | G | #4–300 kcmil | **CH42L225G** ③ | **CH8GF** | **CH8GS** |
| | 42 | Outdoor | G | #4–300 kcmil | **CH42L225R** ②③ | — | — |
| 400 | 42 | Indoor | P | (2) 1/0–300 kcmil<br>(1) 750 kcmil | **CH42PL400** ④ | **CH7PF** ⑤ | **CH7PS** |

***Notes***

① Suitable for use as service equipment when not more than six disconnecting means are provided and when not used as a lighting and appliance panelboard (see Article 408.34 of the NEC).

② Rainproof panels are furnished with hub closure plates. For rainproof hubs, refer to **Page V1-T1-25**.

③ Suitable for use as service equipment when a circuit breaker is used as a main breaker. The main breaker is backfed and requires hold-down bracket kit catalog number **CH125RB**.

④ Suitable for use as service equipment when a circuit breaker is used as a main breaker. The main breaker is backfed and must be a Type CHB. **The breaker cannot be a Type CH**.

⑤ This cover is for flush application only (not combination).

Box sizes **Pages V1-T1-27** and **V1-T1-28**.

***Convertible Loadcenters MCB or MLO—Base Units and Main Devices—10/25/35 kAIC***

Complete assembly consists of: loadcenter, cover, and either main breaker kit or main lug kit.

## Indoor—Single-Phase—Three-Wire—120/240 V—Insulated/Bondable Split Neutral—Top or Bottom Feed

| Maximum Main Ampere Rating | Maximum Number of Single Poles | Box Size | Loadcenter Box and Panel Catalog Number ① | Loadcenter Cover Catalog Number | | Main Lug Kit | | Main Breaker Kit | | | |
|---|---|---|---|---|---|---|---|---|---|---|---|
| | | | | Combination | Surface | Wire Size | Catalog Number | kAIC Rating | Wire Size | Catalog Number | |
| 125 | 22 | C | **CH22N125C** | **CH8CF** | **CH8CS** | #10–1/0 | **CHL125N** | 10 | #10–1/0 | **CH2100N** ③ | — |
| | | | | | | | | | | **CH2125N** ③ | — |
| 200 | 32 | J | **CH32N200J** | **CH8JF** | **CH8JS** | #4–300 kcmil | **CHL225N** | 25/35 ② | #2–300 kcmil | **CSR2125N** | **CSH2125N** ④ |
| | | | | | | | | | | **CSR2150N** | **CSH2150N** ④ |
| | | | | | | | | | | **CSR2175N** | **CSH2175N** ④ |
| | | | | | | | | | | **CSR2200N** | **CSH2200N** ④ |
| 225 | 42 | K | **CH42N225K** | **CH8KF** | **CH8KS** | #4–300 kcmil | **CHL225N** | 25/35 ② | #2–300 kcmil | **CSR2125N** | **CSH2125N** ④ |
| | | | | | | | | | | **CSR2150N** | **CSH2150N** ④ |
| | | | | | | | | | | **CSR2175N** | **CSH2175N** ④ |
| | | | | | | | | | | **CSR2200N** | **CSH2200N** ④ |
| | | | | | | | | | | **CSR2225N** | **CSH2225N** ④ |

## Outdoor—Single-Phase—Three-Wire—120/240 V—Insulated/Bondable Split Neutral (Unless Otherwise Noted)

| Maximum Main Ampere Rating | Maximum Number of Single Poles | Box Size | Loadcenter Box and Panel Catalog Number ① | Main Lug Kit | | Main Breaker Kit | | | |
|---|---|---|---|---|---|---|---|---|---|
| | | | | Wire Size | Catalog Number | kAIC Rating | Wire Size | Catalog Number | |
| 125 | 22 | C | **CH22N125R** ⑤ | #10–1/0 | **CHL125N** | 10 | #10–1/0 | **CH2100N** ③ | — |
| | | | | | | | | **CH2125N** ③ | — |
| 200 | 8 | E | **CH8N200RF** ⑤⑥⑦ | #4–300 kcmil | **CHL225N** | 25/35 ② | #2–300 kcmil | **CSR2125N** | **CSH2125N** |
| | | | | | | | | **CSR2150N** | **CSH2150N** |
| | | | | | | | | **CSR2175N** | **CSH2175N** |
| | | | | | | | | **CSR2200N** | **CSH2200N** |
| 200 | 32 | J | **CH32N200R** ⑤ | #4–300 kcmil | **CHL225N** | 25/35 ② | #2–300 kcmil | **CSR2125N** | **CSH2125N** ④ |
| | | | | | | | | **CSR2150N** | **CSH2150N** ④ |
| | | | | | | | | **CSR2175N** | **CSH2175N** ④ |
| | | | | | | | | **CSR2200N** | **CSH2200N** ④ |
| 225 | 42 | K | **CH42N225R** ⑤ | #4–300 kcmil | **CHL225N** | 25/35 ② | #2–300 kcmil | **CSR2125N** | **CSH2125N** ④ |
| | | | | | | | | **CSR2150N** | **CSH2150N** ④ |
| | | | | | | | | **CSR2175N** | **CSH2175N** ④ |
| | | | | | | | | **CSR2200N** | **CSH2200N** ④ |
| | | | | | | | | **CSR2225N** | **CSH2225N** ④ |

***Notes***

① Panel does not include main. Order main breaker or main lug kit separately.
② If 35 kAIC is required, use CSH breaker.
③ Hold-down kit included.
④ 35 kAIC series combination rating is obtained when Types CH, CHT and CHP branch breakers are used with CSH main.
⑤ Rainproof panels are furnished with hub closure plates. For rainproof hubs, refer to **Page V1-T1-25**.
⑥ Includes feed-through lugs for both phase and neutral conductors.
⑦ Insulated/bondable single neutral.

Interrupting rating depends on main circuit breaker selected.

### *Three-Phase—Main Circuit Breaker Loadcenters—10 kAIC*

**CH42B3200L**

#### Three-Phase Four-Wire—208Y/120 Vac or 240 Vac Insulated/Bondable Split Neutral

| Main Breaker Type | Main Ampere Rating | Maximum Number 3/4-Inch (19.1 mm) Poles | Enclosure Type | Box Size | Wire Size Range Cu/Al 60 °C or 75 °C for Main Breaker | Loadcenter ①② Catalog Number | Loadcenter Cover Catalog Number Combination | Loadcenter Cover Catalog Number Surface |
|---|---|---|---|---|---|---|---|---|
| CC 10 kAIC | 150 | 30 | Indoor | L | #1–4/0 | **CH30B3150L** | **CH8LF** | **CH8LS** |
| | | 30 | Outdoor | L | #1–4/0 | **CH30B3150R** ③ | — | — |
| | 200 | 30 | Indoor | L | #2/0–300 kcmil | **CH30B3200L** | **CH8LF** | **CH8LS** |
| | | 30 | Outdoor | L | #2/0–300 kcmil | **CH30B3200R** ③ | — | — |
| | | 42 | Indoor | L | #2/0–300 kcmil | **CH42B3200L** | **CH8LF** | **CH8LS** |
| | | 42 | Outdoor | L | #2/0–300 kcmil | **CH42B3200R** ③ | — | — |
| | 225 | 30 | Indoor | L | #2/0–300 kcmil | **CH30B3225L** | **CH8LF** | **CH8LS** |
| | | 30 | Outdoor | L | #2/0–300 kcmil | **CH30B3225R** ③ | — | — |
| | | 42 | Indoor | L | #2/0–300 kcmil | **CH42B3225L** | **CH8LF** | **CH8LS** |
| | | 42 | Outdoor | L | #2/0–300 kcmil | **CH42B3225R** ③ | — | — |
| | 400 | 42 | Indoor | PM | (2) 3/0–350 kcmil | **CH424PM400** | **CH7PMF** ④ | **CH7PMS** |

### *Three-Phase—High Interrupting Rated Main Circuit Breaker Loadcenters—100 kAIC*

#### Three-Phase Four-Wire—208Y/120 Vac or 240 Vac Insulated/Bondable Split Neutral

| Main Breaker Type | Main Ampere Rating | Maximum Number 3/4-Inch (19.1 mm) of Poles | Enclosure Type | Box Size | Wire Size Range Cu/Al 60 °C or 75 °C for Main Breaker | Loadcenter Catalog Number ①② | Loadcenter Cover Catalog Number Combination | Loadcenter Cover Catalog Number Surface |
|---|---|---|---|---|---|---|---|---|
| CHH 100 kAIC ⑤ | 200 | 30 | Indoor | L | #2/0–300 kcmil | **CH30H3200L** | **CH8LF** | **CH8LS** |
| | | 30 | Outdoor | L | #2/0–300 kcmil | **CH30H3200R** ③ | — | — |
| | | 42 | Indoor | L | #2/0–300 kcmil | **CH42H3200L** | **CH8LF** | **CH8LS** |
| | | 42 | Outdoor | L | #2/0–300 kcmil | **CH42H3200R** ③ | — | — |
| | 225 | 42 | Indoor | L | #2/0–300 kcmil | **CH42H3225L** | **CH8LF** | **CH8LS** |
| | | 42 | Outdoor | L | #2/0–300 kcmil | **CH42H3225R** ③ | — | — |

***Notes***

① All main circuit breaker loadcenters are listed for use as service entrance equipment.
② Ground bar kits priced separately. For ground bar kits, see **Page V1-T1-25**.
③ Rainproof loadcenters are furnished with hub closure plates. For rainproof hubs, refer to **Page V1-T1-25**.
④ This cover for flush application only (not combination).
⑤ 100 kAIC series combination rating is obtained when Types CH and CHP branch breakers are used with CHH main.

### *Three-Phase—Main Lug Loadcenters*

#### Three-Phase Four-Wire—208Y/120 Vac or 240 Vac Insulated/Bondable Split Neutral (Unless Otherwise Noted)

| Main Ampere Rating | Maximum Number 3/4-Inch (19.1 mm) Spaces | Poles | Enclosure Type | Type of Trim Included | Box Size | Wire Size Range Cu/Al 60 °C or 75 °C for Main Lugs | Loadcenter Catalog Number | Loadcenter Cover Catalog Number Combination | Single |
|---|---|---|---|---|---|---|---|---|---|
| 125 | 6 | 12 ① | Indoor | Surface, no door | 7 | #14–1/0 | **CH6L3125SP** ②③④ | — | — |
| | 6 | 12 ① | Outdoor | — | 7R | #14–1/0 | **CH6L3125RP** ②③④⑤ | — | — |
| | 6 | 12 ① | Indoor | Flush, no door | 7 | #14–1/0 | **CH6L3125FP** ②③④ | — | — |
| | 12 | 12 | Indoor | — | B | #6–2/0 | **CH12L3125B** ⑥⑦ | **CH8BF** | **CH8BS** |
| | 12 | 12 | Outdoor | — | B | #6–2/0 | **CH12L3125R** ⑤⑥⑦ | — | — |
| | 18 | 18 | Indoor | — | C | #6–2/0 | **CH18L3125C** ⑥⑦ | **CH8CF** | **CH8CS** |
| | 18 | 18 | Outdoor | — | C | #6–2/0 | **CH18L3125R** ⑥⑦⑧ | — | — |
| | 24 | 24 | Indoor | — | C | #6–2/0 | **CH24L3125C** ⑥⑦ | **CH8CF** | **CH8CS** |
| | 24 | 24 | Outdoor | — | C | #6–2/0 | **CH24L3125R** ⑥⑦⑧ | — | — |
| 150 | 30 | 30 | Indoor | — | D | #4–300 kcmil | **CH30L3150D** ⑥⑦ | **CH8DF** | **CH8DS** |
| | 30 | 30 | Outdoor | — | D | #4–300 kcmil | **CH30L3150R** ⑤⑥⑨ | — | — |
| 225 | 24 | 24 | Indoor | — | D | #4–300 kcmil | **CH24L3225D** ⑥⑦ | **CH8DF** | **CH8DS** |
| | 24 | 24 | Outdoor | — | D | #4–300 kcmil | **CH24L3225R** ⑤⑥⑨ | — | — |
| | 30 | 30 | Indoor | — | D | #4–300 kcmil | **CH30L3225D** ⑥⑦ | **CH8DF** | **CH8DS** |
| | 30 | 30 | Outdoor | — | D | #4–300 kcmil | **CH30L3225R** ⑤⑥⑨ | — | — |
| | 42 | 42 | Indoor | — | G | #4–300 kcmil | **CH42L3225G** ⑧⑨ | **CH8GF** | **CH8GS** |
| | 42 | 42 | Outdoor | — | G | #4–300 kcmil | **CH42L3225R** ⑤⑧⑨ | — | — |
| 400 | 42 | 42 | Indoor | — | P | (2) 1/0–300 kcmil<br>(1) 750 kcmil | **CH424PL400** ⑩⑪ | **CH7PF** ⑫ | **CH7PS** |

***Notes***

① Requires the use of Type CHT breakers.
② Suitable for use as service equipment when not more than two service disconnecting means are provided or when not more than six service disconnecting means are provided and when not used as a lighting and appliance panelboard (see Article 408.34 of the NEC).
③ Ground bar kits priced separately, see **Page V1-T1-25**.
– Use GBK10 ground bar
– Ground bars mount to the left side wall of the enclosure.
④ Insulated/bondable single neutral.
⑤ Rainproof loadcenters are furnished with hub closure plates. For rainproof hubs, refer to **Page V1-T1-25**.
⑥ Ground bar Type GBK14 is installed.
⑦ Suitable for use as service equipment when a circuit breaker is used as a main breaker. The main breaker is backfed and requires hold-down bracket kit catalog number Type **CH125RB**. Suitable for use as service equipment when not more than six service disconnecting means are provided and when not used as a lighting and appliance panelboard (see Article 408.34 of the NEC).
⑧ Ground bar Type GBK21 is installed.
⑨ Suitable for use as service equipment when a circuit breaker is used as a main breaker. The main breaker is backfed and requires hold-down kit catalog number Type **CH125RB**.
⑩ For ground bar kits, see **Page V1-T1-25**.
⑪ Suitable for use as service equipment when a circuit breaker is used as a main breaker. The main breaker is backfed and must be a Type CHB. **The breaker cannot be a Type CH**.
⑫ This cover for flush application only (not combination).

Box sizes **Pages V1-T1-27** and **V1-T1-28**.

Spa Panels

## Contents—CH Specialty Products


| *Description* | *Page* |
|---|---|
| Overview | V1-T1-2 |
| CH Specialty Products | |
| Spa Panels | |
| Surge Panel | V1-T1-15 |
| Plug-On Neutral Loadcenter | V1-T1-17 |
| Type CH Renovation Loadcenter | V1-T1-18 |
| Type CH Retrofit Interior Kits | V1-T1-19 |
| CH Loadcenter Options and Accessories | V1-T1-22 |
| CH Circuit Breakers | V1-T1-31 |


## CH Specialty Products

## Spa Panels

### Product Description:

Eaton's CH Spa Panels are premium factory-assembled "combination" units that provide ground fault protection, as well as a convenient way to turn spa pumps on and off. The NEC requires that all pool and spa pumps be protected by a ground fault interrupter and a disconnect switch mounted within 10 feet of the tub or the spa.

### Features

- Two extra circuits for additional loads
- Limited lifetime warranty
- UL Listed
- Tough powder-coated galvanized steel enclosure
- Factory-installed two-pole ground fault circuit interrupter (GFCI)

***Quick-Pro℠***

All you need to know to save time and make more money. Specified on certain Eaton products, the Quick-Pro symbol allows for immediate recognition of products that are designed for straightforward installation. When you see Quick-Pro, you know you can install quickly—sometimes up to 50% less than the usual installation time—and move on to your next job.

### Product Selection

CH Spa Panel

**Single-Phase Three-Wire—120/240 Vac Insulated/Bondable Neutral—Factory-Installed Ground Bar**

| Main Ampere Rating | Circuit Breaker Included | Enclosure Type | Type of Trim Included | Box Size | Wire Size Range Cu/Al 60 °C or 75 °C for Main Lugs | Catalog Number |
|---|---|---|---|---|---|---|
| 30 | CH230GF | Outdoor | — | 5R | #14–1/0 | **CH30SPA** ① |
| 40 | CH240GF | Outdoor | — | 5R | #14–1/0 | **CH40SPA** ② |
| 50 | CH250GF | Outdoor | — | 5R | #14–1/0 | **CH50SPA** ③ |
| 60 | CH260GF | Outdoor | — | 5R | #14–1/0 | **CH60SPA** ④ |

***Notes***

① Includes a CH230GFI breaker, factory installed, and two extra circuits for convenience.
② Includes a CH240GFI breaker, factory installed, and two extra circuits for convenience.
③ Includes a CH250GFI breaker, factory installed, and two extra circuits for convenience.
④ Includes a CH260GFI breaker, factory installed, and two extra circuits for convenience.

Surge Panel

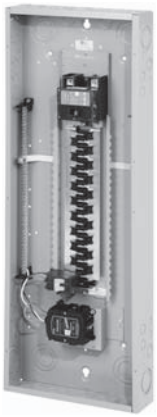

## Contents—CH Specialty Products


| *Description* | *Page* |
|---|---|
| Overview | V1-T1-2 |
| CH Specialty Products | |
| Spa Panels | V1-T1-14 |
| Surge Panel | |
| Plug-On Neutral Loadcenter | V1-T1-17 |
| Type CH Renovation Loadcenter | V1-T1-18 |
| Type CH Retrofit Interior Kits | V1-T1-19 |
| CH Loadcenter Options and Accessories | V1-T1-22 |
| CH Circuit Breakers | V1-T1-31 |


## Surge Panel

### Product Description

Eaton's Type CH Surge Loadcenter includes a factory-mounted and wired surge suppressor device. There is a knockout in the cover that allows the user to view the status indication lights on the surge suppressor. The CH Surge Loadcenter reduces the surge current, helping protect sensitive home electronic equipment.

Save labor by installing a factory-mounted surge protective device.

***Factory-Installed Surge Protection***

- Includes a CHSPT2ULTRA and a two-pole 50 A circuit breaker
- Increases the effectiveness of surge protection due to reduced lead length
- A modified deadfront allows for easy viewing of indicating lights

***Surge Ready***

- Provides a mounting provision for CHSPT2ULTRA
- A modified deadfront allows for easy viewing of indicating lights

### Product Selection

#### Surge Installed Loadcenters

| Ampere Rating | Type | Number of Circuits | Loadcenter Catalog Number | Loadcenter Cover Catalog Number Combination | Surface |
|---|---|---|---|---|---|
| 225 | Convertible | 42 | **CHSUR42N225L** ① | **CHSUR8LF** | **CHSUR8LS** |
| 225 | Convertible ② | 42 | **CHSUR42L225L2** ① | **CHSUR8LF** | **CHSUR8LS** |
| 200 | Main breaker | 42 | **CHSUR42B200L2** ① | **CHSUR8LF** | **CHSUR8LS** |
| 225 | Convertible | 32 | **CHSUR32N225K** ① | **CHSUR8KF** | **CHSUR8KS** |
| 225 | Convertible ② | 32 | **CHSUR32L225K** ① | **CHSUR8KF** | **CHSUR8KS** |
| 200 | Main breaker | 32 | **CHSUR32B200K** ① | **CHSUR8KF** | **CHSUR8KS** |
| 150 | Main breaker | 32 | **CHSUR32B150K** ① | **CHSUR8KF** | **CHSUR8KS** |
| 100 | Main breaker | 32 | **CHSUR32B100K** ① | **CHSUR8KF** | **CHSUR8KS** |
| 125 | Convertible ② | 24 | **CHSUR24L125E** ① | **CHSUR8EF** | **CHSUR8ES** |
| 100 | Main breaker | 24 | **CHSUR24B100E** ① | **CHSUR8EF** | **CHSUR8ES** |
| 200 | Convertible | 40/40 | **BRSUR4040N200** | Cover included | |
| 200 | Main lug | 40/40 | **BRSUR4040L200** | Cover included | |
| 200 | Main breaker | 40/40 | **BRSUR4040B200** | Cover included | |
| 200 | Convertible | 30/40 | **BRSUR3040N200** | Cover included | |
| 200 | Main lug | 30/40 | **BRSUR3040L200** | Cover included | |
| 200 | Main breaker | 30/40 | **BRSUR3040B200** | Cover included | |

***Notes***

① Order cover separately.
② With main lugs installed.

## Surge Ready Loadcenters (provision only, CHSPT2ULTRA and breaker not included)

| Ampere Rating | Type | Number of Circuits | Loadcenter Catalog Number ① | Loadcenter Cover Catalog Number Combination | Surface |
|---|---|---|---|---|---|
| 225 | Convertible | 42 | **CHEC42N225L** | **CHSUR8LF** | **CHSUR8LS** |
| 225 | Convertible ② | 42 | **CHEC42L225L** | **CHSUR8LF** | **CHSUR8LS** |
| 200 | Main breaker | 42 | **CHEC42B200L** | **CHSUR8LF** | **CHSUR8LS** |
| 225 | Convertible ② | 32 | **CHEC32L225K** | **CHSUR8KF** | **CHSUR8KS** |
| 225 | Convertible | 32 | **CHEC32N225K** | **CHSUR8KF** | **CHSUR8KS** |
| 225 | Convertible | 32 | **CHEC32N225R** ③ | — | — |
| 200 | Main breaker | 32 | **CHEC32B200K** | **CHSUR8KF** | **CHSUR8KS** |
| 150 | Main breaker | 32 | **CHEC32B150K** | **CHSUR8KF** | **CHSUR8KS** |
| 100 | Main breaker | 32 | **CHEC32B100K** | **CHSUR8KF** | **CHSUR8KS** |
| 125 | Convertible ② | 24 | **CHEC24L125E** | **CHSUR8EF** | **CHSUR8ES** |
| 100 | Main breaker | 24 | **CHEC24B100E** | **CHSUR8EF** | **CHSUR8ES** |

## Main Breaker Kits

| Maximum Main Ampere Rating | Catalog Number 25 kAIC | 35 kAIC |
|---|---|---|
| 100 | **CSR2100N** | **CSH2100N** |
| 150 | **CSR2150N** | **CSH2150N** |
| 200 | **CSR2200N** | **CSH2200N** |
| 225 | **CSR2225N** | **CSH2225N** |

## Main Lug Kits

| Maximum Main Ampere Rating | Catalog Number |
|---|---|
| 125 | **CHL125N** |
| 225 | **CHL225N** |

## Technical Data and Specifications

### *Ratings*

- Loadcenter
  - 25 kAIC main breaker, main lug only, and convertible main breaker/main lug
  - Factory installed or provision for field-installed surge suppressor
  - Top or bottom feed
- Surge protective device (CHSPT2ULTRA)
  - Nominal discharge current: 20 kA ($I_n$)
  - Surge current capacity per phase: 108 kA
  - Warranty: $75,000 connected equipment ④
  - For further product ratings, see Volume 1, Tab 2.1 Surge Protection

***Notes***

① Order cover separately.

② With main lugs installed.

③ Rainproof loadcenters are furnished with hub closure plates. For rainproof hubs, refer to **Page V1-T1-25**.

④ For warranty details, visit www.eaton.com/surgetrap.

60-Circuit Plug-On Neutral Loadcenter

## Contents—CH Specialty Products


| *Description* | *Page* |
|---|---|
| Overview | V1-T1-2 |
| CH Specialty Products | |
| Spa Panels | V1-T1-14 |
| Surge Panel | V1-T1-15 |
| Plug-On Neutral Loadcenter | |
| Type CH Renovation Loadcenter | V1-T1-18 |
| Type CH Retrofit Interior Kits | V1-T1-19 |
| CH Loadcenter Options and Accessories | V1-T1-22 |
| CH Circuit Breakers | V1-T1-31 |


## Plug-On Neutral Loadcenter

### Product Description

Code changes and higher safety standards are leading to more arc fault and ground fault circuit interrupter installations. Eaton offers a unique product solution that enables a direct connection of the breaker to the neutral bar, eliminating the need for wiring a pigtail.

### Features and Benefits

- Time savings up to 25% per AFCI/GFCI installation
- Eliminates nuisance tripping due to loose pigtail connections
- Clean gutter space
- Easier troubleshooting due to less wiring
- Backed by a limited lifetime warranty

### Product Selection

#### Main Breaker Plug-On Neutral Loadcenters

| Main Breaker Type | Main Ampere Rating | Max. Number 3/4-Inch Poles | Enclosure Type | Wire Size Range for Main Breaker | Catalog Number | Cover Catalog Number Combination | Cover Catalog Number Surface |
|---|---|---|---|---|---|---|---|
| CSR 25 kAIC | 100 | 24 | Indoor | #2–300 kcmil | **CH24BPN100E** | **CH8EF** | **CH8ES** |
| | 200 | 32 | Indoor | #2–300 kcmil | **CH32BPN200J** | **CH8JF** | **CH8JS** |
| | 200 | 42 | Indoor | #2–300 kcmil | **CH42BPN200K** | **CH8KF** | **CH8KS** |
| | 200 | 60 | Indoor | #2–300 kcmil | **CH60BPN200N** | **CH8NF** | **CH8NS** |

#### Main Lug Only/Convertible Plug-On Neutral Loadcenters—With Factory Installed Main Lugs

| Max. Ampere Rating | Max. Number 3/4-Inch Poles | Enclosure Type | Catalog Number | Wire Size Range for Main Breaker | Cover Catalog Number Combination | Cover Catalog Number Surface |
|---|---|---|---|---|---|---|
| 125 | 24 | Indoor | **CH24NLPN125E** ① | #6–300 kcmil | **CH8NLEF** | **CH8NLES** |
| 225 | 32 | Indoor | **CH32NLPN225J** | #6–300 kcmil | **CH8NLJF** | **CH8NLJS** |
| 225 | 42 | Indoor | **CH42NLPN225K** | #6–300 kcmil | **CH8NLKF** | **CH8NLKS** |
| 225 | 60 | Indoor | **CH60NLPN225N** | #6–300 kcmil | **CH8NLNF** | — |

#### Main Breaker Kits

| Breaker Ampere Rating | Lug Size | Catalog Number |
|---|---|---|
| 100 | #2–300 kcmil | **CSR2100** |
| 150 | #2–300 kcmil | **CSR2150N** |
| 200 | #2–300 kcmil | **CSR2200N** |
| 225 | #2–300 kcmil | **CSR2225N** |

***Note***

① Maximum 125 A main device.

Renovation Panel

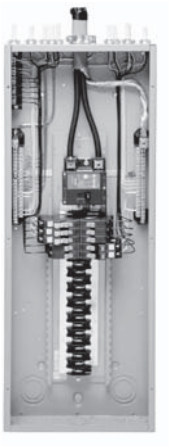

## Contents—CH Specialty Products


| *Description* | *Page* |
|---|---|
| Overview | V1-T1-2 |
| CH Specialty Products | |
| Spa Panels | V1-T1-14 |
| Surge Panel | V1-T1-15 |
| Plug-On Neutral Loadcenter | V1-T1-17 |
| Type CH Renovation Loadcenter | |
| Type CH Retrofit Interior Kits | V1-T1-19 |
| CH Loadcenter Options and Accessories | V1-T1-22 |
| CH Circuit Breakers | V1-T1-31 |


## Type CH Renovation Loadcenter

### Product Description

Eaton's Renovation Loadcenter is designed for the service contractor. With the addition of a five-circuit terminal block factory mounted in the top left corner of the loadcenter, the service contractor can terminate short-circuit wires instead of having to use expensive wire nuts. Also, the Renovation Loadcenter incorporates a twin-stacked neutral design that places the neutral and ground terminations higher in the loadcenter. Both of these features were added without increasing any size from a standard loadcenter. These features will eliminate the need for wire nuts and make for a much neater installation. There is a provision to field mount a second five-circuit terminal block (RN5TB) in the top right corner of the loadcenter. Choose amongst Eaton's Type CH breaker family for use in the Renovation Panel.

### Product Selection

***Single-Phase—Main Circuit Breaker Loadcenters 25 kAIC*** ①

#### Single-Phase, Three-Wire—120/240 Vac—Stacked Split Neutral

| Main Breaker Type | Main Ampere Rating | Max. Number 3/4-Inch (19.1 mm) of Poles | Enclosure Type | Box Size | Wire Size Range Cu/Al 60 °C or 70 °C for Main Breakers | Loadcenter Catalog Number | Cover Catalog Number ② Combination | Cover Catalog Number ② Surface |
|---|---|---|---|---|---|---|---|---|
| CH | 100 | 20 | Indoor | C | #6–1/0 | **CH22B100CRN** | **CH8CFF** | **CH8CS** |
| CSR | 150 | 32 | Indoor | J | #2–300 kcmil | **CH32B150JRN** | **CH8JF** | **CH8JS** |
| CSR | 200 | 32 | Indoor | J | #2–300 kcmil | **CH32B200JRN** | **CH8J** | **CH8JS** |
| CSR | 200 | 42 | Indoor | K | #2–300 kcmil | **CH42B200KRN** | **CH8KF** | **CH8KS** |

***Branch Circuit Breakers (CH)***

See **Pages V1-T1-2–V1-T1-13**.

#### Renovation Loadcenter

| Description | Catalog Number |
|---|---|
| Five-circuit terminal block kit | **RN5TB** |
| Ground bar kits (two maximum per panel) | (See **Page V1-T1-25**) |

***Notes***

① 100 A main breaker is rated 10 kAIC.

② Combination style covers may be used in surface or flush applications.

All main circuit breaker loadcenters are listed for use as service entrance equipment. Loadcenters are factory-bonded for service entrance applications. Remove bonding strap for separate neutral and ground bars for sub-feed applications.

Type CH Retrofit Interior

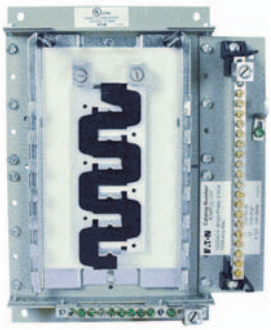

*Type CH Retrofit Adjustable Interior*

*Type CH Retrofit Interior Collar and Assembly with Trim*

## Contents—CH Specialty Products


| *Description* | *Page* |
|---|---|
| Overview | **V1-T1-2** |
| CH Specialty Products | |
| Spa Panels | **V1-T1-14** |
| Surge Panel | **V1-T1-15** |
| Plug-On Neutral Loadcenter | **V1-T1-17** |
| Type CH Renovation Loadcenter | **V1-T1-18** |
| Type CH Retrofit Interior Kits | |
| CH Loadcenter Options and Accessories | **V1-T1-22** |
| CH Circuit Breakers | **V1-T1-31** |


## Type CH Retrofit Interior Kits

### Product Description

Eaton's unique Retrofit Interior allows the customer to cost-effectively and safely upgrade an electrical service without removing the existing enclosure from the wall.

### Application Description

The Retrofit Interior is designed and tested specifically for renovating an outdated electrical panel in an apartment, a condominium or a single family home. These outdated panels are being recognized by local inspectors and other authorities as a possible hazard.

***Opportunities to Retrofit***

- Single- or three-phase
- Main lug only or main breaker
- Up to 42 circuits
- Up to 225 A interiors, 400 A available upon request
- Available with CH breakers (3/4-inch) with copper bus or BR breakers (1-inch) with aluminum bus
- The minimum lifetime warranty for residential breakers shall be as follows:
  - Limited lifetime warranty on all CH branch breakers and loadcenters
  - Refer to Eaton for complete warranty details

### Features and Benefits

***Upgrading Existing Electrical Infrastructure Is Simple***

- Replaces vintage brands that have hard to find, expensive replacement breakers
- Safely upgrade to arc fault and ground fault breakers to meet current electrical codes
- Maximizes number of circuits available with compact design
- Eco-friendly in asbestos-filled environments
- Exclusive design

***Save Time and Money Throughout the Installation***

- Uses existing panel box and wires
- Eliminates expensive and time-consuming drywall/paint repair
- Saves 2–3 hours of installation time compared to a complete panel changeout
- Eliminates precise measurements with field-adjustable kit

***Detailed Product Guide***

For questions about retrofit solutions, contact the Lincoln Flex Center at 800-330-6479 or flexcenterlincoln@eaton.com. Be sure to provide width, height and depth of panel.

### Standards and Certifications

Meets 2008/2011/2014 NEC wire bending requirements.

1

## CH Specialty Product Selection

To select the retrofit kit:

1. From the existing box size determine which retrofit groups are suitable (may be more than one).
2. Use type of interior, number of phases, and type of main to find the selection chart.
3. Select part number from chart (if main breaker, replace XXX with specific amp rating).
4. Note that the overlap of the existing wall is the retro cover size minus the existing box size. If specific measurements are needed, communicate that you need a custom trim size.
5. Contact the Lincoln Flex Center at 800-330-6479 for pricing, lead-times, and order entry instructions.

***How to Order:***

1. Measure the existing panel enclosure to determine appropriate kits for your project.
2. Match the existing dimensions with the table below to obtain the correct catalog number.
3. Order your retrofit kit from a local Eaton authorized distributor.

Need assistance or can't find retrofit to fit existing enclosure?

Email or call Eaton's Residential Flex Center at 1-800-330-6479 for all your retrofit needs. Go to www.eaton.com/eccn to locate an Eaton Certified Contractor.

### Retrofit Interior Kit Specifications

Five recommended groups: existing box height determines retro group size. Approximate Dimensions in Inches (mm).

| | | Existing Enclosure Parameters—Inches (mm) | | | | | | | | | |
|---|---|---|---|---|---|---|---|---|---|---|---|
| **Catalog Number ①** | **Cover ②** | **Minimum Depth** | **Maximum Depth** | **Minimum Width** | **Minimum Height** | **Phase** | **Main** | **Bus** | **Amperes ③** | **Spaces / Circuits** | **UL 67 Listed** |
| **CH Retrofit Interiors and Covers** | | | | | | | | | | | |
| **RWCH6L125N** | **CRWCH6ML****** | 3.13 (79.5) | 4.13 (104.9) | 7.00 (177.8) | 8.50 (215.9) | Single | MLO | CH | 125 | 6 | No |
| **RSCH10B125N** | **CRWCH12ML****** | 3.50 (88.9) | 4.50 (114.3) | 8.50 (215.9) | 16.50 (419.1) | Single | MCB | CH | 125 | 10 | No |
| **RSCH12L125N** | **CRWCH12ML****** | 3.50 (88.9) | 4.50 (114.3) | 8.50 (215.9) | 16.50 (419.1) | Single | MLO | CH | 125 | 12 | No |
| **RACH22B125J** | **CRACH24ML****** | 3.75 (95.3) | 4.25 (108.0) | 13.00 (330.2) | 21.00 (533.4) | Single | MCB | CH | 125 | 22 | No |
| **RACH24L125J** | **CRACH24ML****** | 3.75 (95.3) | 4.25 (108.0) | 13.00 (330.2) | 21.00 (533.4) | Single | MLO | CH | 125 | 24 | No |
| **RBCH24B200_** | **CRBCH24CS****** | 3.75 (95.3) | 6.00 (152.4) | 13.00 (330.2) | 29.00 (736.6) | Single | MCB | CH | 200 | 24 | No |
| **RBCH32L200_** | **CRBCH32ML****** | 3.75 (95.3) | 6.00 (152.4) | 13.00 (330.2) | 29.00 (736.6) | Single | MLO | CH | 200 | 32 | No |
| **RCCH32B200_** | **CRBCH32CS****** | 3.75 (95.3) | 6.00 (152.4) | 13.00 (330.2) | 34.00 (863.6) | Single | MCB | CH | 200 | 32 | No |

***Notes***

① Catalog numbers shown with "_" at the end need one of the following suffixes to denote depth:
J = 3.75–4.25
K = 4.25–5.00
L = 5.00–6.00
Example: RBCH24B200J would signify an interior set with a depth range of 3.75 to 4.25 inches.

② ****Denotes characters in the catalog number that relate to overall cover size.
Example: CRWCH6ML2620 would signify a cover 26.00 inches H x 20.00 inches W, or CRBCH24CS3324 would be 33.00 inches H x 24.00 inches W.

③ Amperes for MB panels is maximum; catalog number will reflect actual amperage of breaker included.

For UL applications, maximum cover sizes may apply.

### *Complete Assembly*

**Note:** For complete assembly, interior and cover need to be ordered separately.

### Adjustable Interior

- Factory installed ground and neutral bars positioned to accept existing wires
- Field adjustable depth matches existing panel box
- Adjustable height enables optional placement of the interior
- Field bondable for service entrance options

*Adjustable Interior*

### Standard Trim and Collar

- Standard trim matches new interior
- New circuit directory for updated labeling
- Oversized collar eliminates expensive wall/paint repair

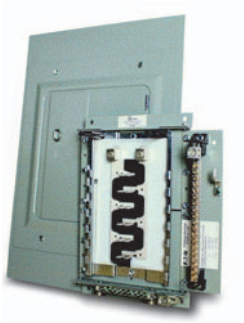

*Collar and Assembly with Trim*

### *Single-Phase—Main Lug Loadcenters, Non-Metallic*

**2460SNM**

#### Single-Phase Three-Wire—120/240 Vac—Insulated/Bondable Neutral

| Main Ampere Rating | Maximum Number 1-Inch (25.4 mm) Spaces | Circuits | Enclosure Type | Trim Type | Box Size | Wire Size Range Cu/Al 60 °C or 75 °C for Main Lugs | Loadcenter Catalog Number |
|---|---|---|---|---|---|---|---|
| 40 ① | 2 | 4 | Indoor | Flush (no door) | 2 | ② | **TT120FLGNM** ②③ |
| | 2 | 4 | Indoor | Surface (no door) | 2 | | **TT120SLGNM** ②③ |
| 60 | 2 | 4 | Indoor | Flush (no door) | 2 | #14–2 | **2460FNM** |
| | 2 | 4 | Indoor | Surface (no door) | 2 | | **2460SNM** |
| | 2 | 4 | Indoor | Flush (no door) | 2 | | **2460FGNM** ③ |
| | 2 | 4 | Indoor | Surface (no door) | 2 | | **2460SGNM** ③ |
| | 2 | 4 | Outdoor | — | — | | **2460RNM-A2** |

***Notes***

① Suitable for use as service equipment when not more than six main disconnecting means are provided and when not used as a lighting and appliance panelboard (see Article 408.34 of the NEC).

② This device has no main lugs. A Type BR or BD breaker is required to be backfed to supply power to branch breakers. This device is single-phase 120 Vac only. With the use of three Type BR breakers, there are two branch circuits available. With the use of three Type BD breakers, there are five branch circuits available.

③ Includes GB4NM ground bar.

1

## CH Loadcenter Options and Accessories

CHSF2125

CHSF3125

CHFP

TDL

BINA

### Field Installation and Parts

| Description | Ordering Quantity ① | Catalog Number |
|---|---|---|
| Sub-feed lug blocks—two-pole, 125 A, 3/4-inch (19.1 mm) spaces needed | 1 | **CHSF2125** |
| Sub-feed lug blocks—three-pole, 125 A, 3/4-inch (19.1 mm) spaces needed | 1 | **CHSF3125** |
| Neutral/ground lug—add-on neutral or ground lug | 1 | **NL20** |
| | 1 | **NL30** |
| | 1 | **NL300** |
| Filler plates—3/4-inch (19.1 mm) space circuit breaker space | 25 | **CHFP** |
| CSR main circuit breaker filler plate (with hardware) | 1 | **CSRFP** |
| Door lock—12–42 circuits, and 100–225 A | 1 | **TDL** |
| Sandlewood spray paint | 1 | **SPCSW** |
| ANSI-61 light gray touchup paint for outdoor loadcenters | 1 | **SPC61** |
| Isolated neutral assembly (computer circuits) | 1 | **BINA** |
| Circuit directory—adhesive backed | 10 | **TCD** |
| Cover screws | 25 | **LCCS** |
| Cover replacement latch 14-5/16 inch (363.55 mm) wide loadcenters only | 1 | **CHRLS** |
| Circuit marking strip (next to breakers) | 10 | **CHMS** |
| Circuit identification label (preprinted breaker labels next to breakers) | 25 | **CHBL** |
| Series rated caution label | 25 | **SRL** |
| Branch circuit numbering strip | 20 | **CHNS** |
| Bonding strap with screw | 1 | **BSSUSE** |
| CH plug-on neutral ground bonding strap | 1 | **BSCHPON** |

***Note***

① Must be purchased in multiples of ordering quantities indicated.

### *Mechanical Interlock Covers*

Covers mechanically interlock two breakers. Type A covers interlock two CH breakers mounted across from one another. Type B covers interlock a main Type CSR breaker with a Type CH.

**CH8BRM Type A**

**CH8EFM Type B**

## Mechanical Interlocks

| Type | Fits Loadcenter Catalog Numbers | Mechanical Interlock Trim/Deadfront Catalog Numbers: Flush | Surface |
|---|---|---|---|
| A | CH12L125B | CH8BFM | CH8BSM |
| | CH16L125B | | |
| | CH12L3125B | | |
| | CH14B100B | | |
| | CH20L125C | CH8CFM | CH8CSM |
| | CH24L125C | | |
| | CH18L3125C | | |
| | CH24L3125C | | |
| | CH22B100C | | |
| | CH22N100C | | |
| | CH24L150D | CH8DFM | CH8DSM |
| | CH32L150D | | |
| | CH24L3225D | | |
| | CH30L3150D | | |
| | CH42L225G | CH8GFM | CH8GSM |
| | CH42L3225G | | |
| | Inner cover of Box B raintight | — | CH8BRM |
| | Inner cover of Box C raintight | — | CH8CRM |
| **Indoor** | | | |
| B | CH24B150E | CHEFM | CHESM |
| | CH24B200E | | |
| | CH32B150J | CH8JFM | CH8JSM |
| | CH32B200J | | |
| | CH3242B200J | | |
| | CH32N200J | | |
| | CH32B225J | | |
| | CH42B200K | CH8KFM | CH8KSM |
| | CH42N200K | | |
| | CH42B225K | | |
| | CH60BPN200N | CH8NFM | — |
| **Outdoor** | | | |
| B | CH8B150RF | CH3RDF7M | — |
| | CH8B200RF | | |
| | CH8N200RF | | |
| | CH24B150R | | |
| | CH24B200R | | |
| | CH32B150R | CH3RDF9M | — |
| | CH32B200R | | |
| | CH32N200R | | |
| | CH32B225R | | |
| | CH42B200R | CH3RDF10M | — |
| | CH42N200R | | |
| | CH42B225R | | |

CH8BRM Type A

CH8EFM Type B

## Mechanical Interlocks, continued

| Type | Fits Loadcenter Catalog Numbers | Mechanical Interlock Trim/Deadfront Catalog Numbers: Flush | Surface |
|---|---|---|---|
| **Next Generation Power Center** | | | |
| B | CHPC32B150L | CHPC8B32LFM | — |
| | CHPC32B200L | | |
| | CHPC32N200L | | |
| | CHPC42B150L | CHPC8B42LFM | — |
| | CHPC42B200L | | |
| | CHPC42N200L | | |
| | CHPC32B125TR | CH3RDF15M | — |
| | CHPC32B150TR | | |
| | CHPC32B200TR | | |
| | CHPC32N200TR | | |
| | CHPC42B150TR | CH3RDF16M | — |
| | CHPC42B200TR | | |
| | CHPC42N200TR | | |
| | CHPC32B150TR | CH3RDF17M | — |
| | CHPC32B200TR | | |
| | CHPC42B200BR | CH3RDF18M | — |
| **Vintage** ① | | | |
| | CH20JJM200 | CH7JJFREPLM | — |
| | CH24JJM150 | | |
| | CH30JJM150 | | |
| | CH30JJM200 | | |
| | CH30JJM150H | | |
| | CH3040JJMM200 | | |
| | CH304JJM150 | | |
| | CH304JJM200 | | |
| | CH304JJM200H | | |
| | CH30KKM225 | CH7KKFREPLM | — |
| | CH40KKM200H | | |
| | CH40KKM225 | | |
| | CH40KKM200H | | |
| | CH40KKM225H | | |
| | CH304KKM200 | | |
| | CH304KKM200H | | |
| | CH304LLM225 | CH7LLFREPLM | — |
| | CH424LLM225H | | |

***Note***

① If vintage part number does not match exactly, the cover may not fit. Simple variations such as an "N" at the end of the part number contain minor design variations that will prevent our cover from working with that particular loadcenter.

DS100H1

## Field Installation Rainproof Conduit Hubs

| Description | Conduit Size Inches (mm) | Ordering Quantity ① | Catalog Number |
|---|---|---|---|
| Group 1—for use with 70, 100 and 125 A MLO and MCB loadcenters and circuit breaker enclosures | 0.75 (19.1) | 1 | **DS075H1** |
| | 1.00 (25.4) | 1 | **DS100H1** |
| | 1.25 (31.8) | 1 | **DS125H1** |
| | 1.50 (38.1) | 1 | **DS150H1** |
| | 2.00 (50.8) | 1 | **DS200H1** |
| Group 2—for use with 150, 200 and 225 A MLO and MCB loadcenters and circuit breaker enclosures | 2.00 (50.8) | 1 | **DS200H2** |
| | 2.50 (63.5) | 1 | **DS250H2** |
| | 3.00 (76.2) | 1 | **DS300H2** |
| Adapter kit—allows installing a Group 1 hub on devices arranged for Group 2 hubs | — | 1 | **DS900AP** |
| Group 1—small blank hub closure plate | — | 1 | **DS900CP1** |
| Group 2 —large blank hub closure plate | — | 1 | **DS900CP2** |

GBK14

## Ground Bar Kits

| Description (See Legend) | Length Inches (mm) | Ordering Quantity ② | Catalog Number |
|---|---|---|---|
| ●○○○○●○ | 2.54 (64.5) | 1 | **GBK5** ② |
| ●○○○○●○■ | 3.59 (91.2) | 1 | **GBK520** ② |
| ●○○○○●○○○○○○ | 4.29 (109.0) | 1 | **GBK10** ② |
| ●○○○○●○○○○○○■ | 5.34 (135.6) | 1 | **GBK1020** ② |
| ◒●◒◒◒⬓◒●◒⬓◒◒◒ | 4.61 (117.1) | 1 | **GBK13** ② |
| ●○○○○●○○○○○○○○○ | 5.69 (144.5) | 1 | **GBK14** ② |
| ●○○○○●○○○○○○○○○■ | 6.74 (171.2) | 1 | **GBK1420** ② |
| ●○○○○●○○○○○○○○○○○○○○○ | 8.14 (206.8) | 1 | **GBK21** ② |
| ●○○○○●○○○○○○○○○○○○○○○○○■ | 9.19 (233.4) | 1 | **GBK2120** ② |
| ○○○○○○○○●○○○○○○●○○○○○○○ | 7.94 (201.7) | 1 | **CH9GP21** ③④ |

**Ground Bar Legend**

○ = (3) #14–#10 Cu/Al or (1) #14–#4 Cu/Al
■ = (1) #6–2/0 Cu/Al
⬓ = (1) 1/0–14 or (3) #10–12 Cu/Al
◒ = (1) #14–1/0 Cu/Al or (3) #14–#10 Cu/Al
● = Mounting hole

## Grounded "B" Phase Adapters

| Maximum Amperes | Three-Phase Loadcenter Types of Panels | Kit Catalog Number ⑤ |
|---|---|---|
| 125 | 12–32 circuit main lug | **CHGRD1** |
| 225 | Main lug and CHH main breaker panels | **CHGRD2** |
| | CC main CB panels | **CHGRD3** |

## Neutral Bar Accessories

| Description | Catalog Number ⑤ |
|---|---|
| Replacement neutral for all B and C type boxes | **CHN125C** |
| Replacement neutral for all D type boxes | **CHN125D** |
| Replacement neutral for all E, G, J, K and L type boxes | **CHN225L** |
| Isolated Neutral Assembly (computer circuits) | **BINA** |

***Notes***

① Must be purchased in multiples of ordering quantities indicated.
② Distance between mounting holes is 1-3/4 inches (44.5 mm).
③ For single- and three-phase 400 A loadcenters.
④ Distance between mounting holes is 2-13/32 inches.
⑤ Cannot be used in Safety Breaker Panels. Classic Plus Panels only.

***Decorator Cover Accessory***

- For easy use with CH loadcenters mounted in living space
- Easily wallpapered or painted to match any decor
- Loadcenter accessory—exclusively from Eaton

***Now you see it …***



***… Now you don't.***

## Decorator Cover Accessory ①

| Catalog Number<br>Corresponding Cover | Existing CH Loadcenter Cover |
|---|---|
| CH8BF | **CH8KDNB** |
| CH8CF | **CH8KDNC** |
| CH8DF/EF | **CH8KDND** |
| CH8GF/JF | **CH8KDNJ** |
| CH8KF | **CH8KDNK** |

***Loadcenter Goof Collars***

Don't let an ugly drywall problem ruin a beautiful electrical installation.

Eaton's Goof Collar is designed to cover gaps between the finished drywall and loadcenter enclosure. This is often necessary when upgrading the electrical service and the drywall surrounding the panel is damaged. The collar allows 2 inches of overhang beyond the standard flush trim.

***Before***

***After***

## CH Goof Collars

| Inches (mm)<br>Height | Width | Catalog Number<br>Loadcenter Cover | Goof Collar |
|---|---|---|---|
| 21.00 (533.4) | 19.00 (482.6) | **CH8BF** | **CH8BFC1921** |
| 26.00 (660.4) | 19.00 (482.6) | **CH8CF** | **CH8CFC1926** |
| 34.00 (863.6) | 19.00 (482.6) | **CH8DF** | **CH8DFC1934** |
| | | **CH8EF** | |
| | | **CHSUR8EF** | |
| 39.00 (990.6) | 19.00 (482.6) | **CH8GF** | **CH8JFC1939** |
| | | **CH8JF** | |
| 42.00 (1066.8) | 19.00 (482.6) | **CH8KF** | **CH8KFC1942** |
| | | **CHSUR8KF** | |
| 44.00 (1117.6) | 19.00 (482.6) | **CH8LF** | **CH8LFC1944** |
| | | **CHSUR8LF** | |

## BR Goof Collars

| Inches (mm)<br>Height | Width | Catalog Number<br>BR Box Size | Goof Collar |
|---|---|---|---|
| 21.00 (533.4) | 19.00 (482.6) | **B1** | **BRB2GC2319** |
| 23.00 (584.2) | 19.00 (482.6) | **B2** | **BRB1GC2119** |
| 25.00 (635.0) | 19.00 (482.6) | **C1** | **BRC1GC2519** |
| 27.00 (685.8) | 19.00 (482.6) | **C2** | **BRC2GC2719** |
| 31.00 (787.4) | 19.00 (482.6) | **C4** | **BRC4GC3119** |
| 34.00 (863.6) | 19.00 (482.6) | **D1** | **BRD1GC3419** |
| 38.00 (965.2) | 19.00 (482.6) | **G1** | **BRG1GC3819** |
| 43.00 (1092.2) | 19.00 (482.6) | **L1** | **BRL1G4319** |
| 48.00 (1219.2) | 19.00 (482.6) | **L2** | **BRL2GC4819** |

***Note***

① For goof collars not listed in the table, please contact the Lincoln Flex Center at 1-800-330-6479.

## Dimensions

Approximate Dimensions in Inches (mm)

***Residential/Commercial/Unit Enclosure—Box Sizes***

**Note:** Box sizes do not include covers/fronts.

### Residential Loadcenters

| Box Size | Height | Width | Depth |
|---|---|---|---|
| **NEMA Type 1 Indoor** | | | |
| 5 | 9.50 (241.3) | 4.50 (114.3) | 3.13 (79.4) |
| 6 | 11.38 (288.9) | 6.88 (174.6) | 3.39 (86.1) |
| 7 | 13.00 (330.2) | 11.00 (279.4) | 3.69 (93.7) |
| B | 16.75 (425.5) | 14.31 (363.5) | 3.88 (98.4) |
| C | 21.00 (533.4) | 14.31 (363.5) | 3.88 (98.4) |
| D | 29.13 (739.8) | 14.31 (363.5) | 3.88 (98.4) |
| E | 29.13 (739.8) | 14.31 (363.5) | 3.88 (98.4) |
| G | 34.13 (866.8) | 14.31 (363.5) | 3.88 (98.4) |
| J | 34.13 (866.8) | 14.31 (363.5) | 3.88 (98.4) |
| K | 37.00 (939.8) | 14.31 (363.5) | 3.88 (98.4) |
| L | 39.00 (990.6) | 14.31 (363.5) | 3.88 (98.4) |
| N | 45.00 (1143.0) | 14.31 (363.5) | 3.88 (98.4) |
| **NEMA Type 3R Outdoor** | | | |
| 5R | 9.50 (241.3) | 4.50 (114.3) | 3.13 (79.4) |
| 6R | 11.75 (298.5) | 6.50 (165.1) | 4.50 (114.3) |
| 7R | 13.00 (330.2) | 11.00 (279.4) | 3.69 (93.7) |
| B | 16.75 (425.5) | 14.31 (363.5) | 5.19 (131.8) |
| C | 21.00 (533.4) | 14.31 (363.5) | 5.19 (131.8) |
| D | 29.13 (739.8) | 14.31 (363.5) | 5.19 (131.8) |
| E | 29.13 (739.8) | 14.31 (363.5) | 5.19 (131.8) |
| G | 34.13 (866.8) | 14.31 (363.5) | 5.19 (131.8) |
| J | 34.13 (866.8) | 14.31 (363.5) | 5.19 (131.8) |
| K | 37.00 (939.8) | 14.31 (363.5) | 5.19 (131.8) |
| L | 39.00 (990.6) | 14.31 (363.5) | 5.19 (131.8) |

### Commercial Loadcenters

| Box Size | Height | Width | Depth |
|---|---|---|---|
| **NEMA Type 1 Indoor** | | | |
| P | 54.38 (1381.1) | 21.00 (533.4) | 6.00 (152.4) |
| PM | 62.63 (1590.7) | 21.00 (533.4) | 6.00 (152.4) |

### Types ECB and ECC Unit Enclosures

| Height | Width | Depth |
|---|---|---|
| **NEMA Type 1 Indoor** | | |
| 23.25 (590.6) | 8.88 (225.4) | 4.50 (114.3) |
| **NEMA Type 3R Outdoor** | | |
| 23.69 (601.7) | 9.31 (236.5) | 5.44 (138.1) |

***Residential Loadcenter Knockout***

Residential NEMA Type 1 Indoor and NEMA Type 3R Outdoor Enclosures.

### Knockouts for Box Sizes 5, 6, 7, 5R, 6R, 7R

| Code | Diameter | | | |
|---|---|---|---|---|
| A | 0.50 (12.7) | — | — | — |
| B | 0.50 (12.7) | 0.75 (19.1) | — | — |
| C | 0.50 (12.7) | 0.75 (19.1) | 1.00 (25.4) | — |
| D | 0.50 (12.7) | 0.75 (19.1) | 1.00 (25.4) | 1.25 (31.8) |
| E | 0.75 (19.1) | 1.00 (25.4) | 1.25 (31.8) | — |
| F | 0.75 (19.1) | 1.00 (25.4) | 1.25 (31.8) | 1.50 (38.1) |
| G | 1.00 (25.4) | 1.25 (31.8) | 1.50 (38.1) | — |
| H | 1.00 (25.4) | 1.25 (31.8) | 1.50 (38.1) | 2.00 (50.8) |
| I | 1.25 (31.8) | 1.50 (38.1) | 2.00 (50.8) | — |

### Knockout Positions

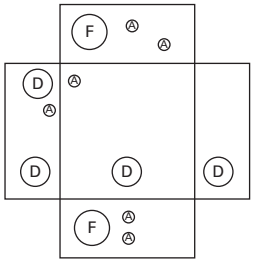


***Box 5***

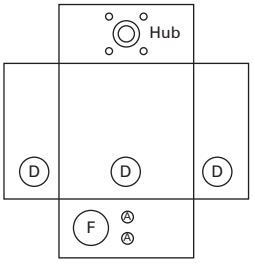


***Box 5R***

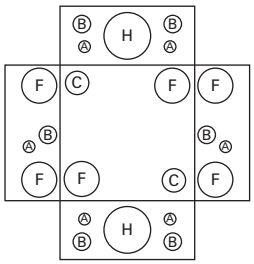


***Box 6***

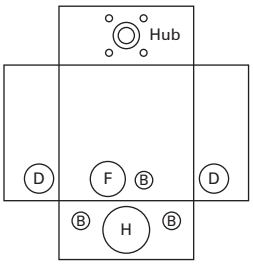


***Box 6R***

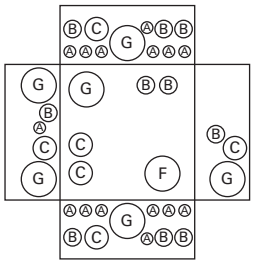


***Box 7***

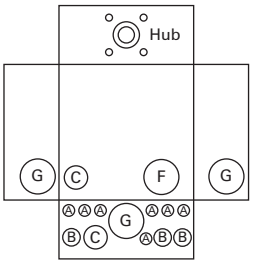


***Box 7R***

Approximate Dimensions in Inches (mm)

***Residential and Commercial Loadcenter Knockout***

Residential NEMA Type 1 indoor and NEMA Type 3R outdoor enclosures.

## Knockouts for Box Sizes 8, 8R, P, PM, B, C, D, E, G, J, K, L, N and Outdoor Boxes 12–60 Circuits

| Code | Diameter | | | | |
|---|---|---|---|---|---|
| a | 0.75 (19.1) | — | — | — | — |
| b | 0.50 (12.7) | 0.75 (19.1) | — | — | — |
| c | 0.50 (12.7) | — | — | — | — |
| d | 1.00 (25.4) | 1.25 (31.8) | 1.50 (38.1) | 2.00 (50.8) | 2.50 (63.5) |
| e | 1.25 (31.8) | 1.50 (38.1) | 2.00 (50.8) | 2.50 (63.5) | — |
| f | 0.75 (19.1) | 1.25 (31.8) | 1.50 (38.1) | 2.00 (50.8) | — |
| g | 0.50 (12.7) | 0.75 (19.1) | 1.00 (25.4) | — | — |
| h | 1.50 (38.1) | 2.00 (50.8) | 2.50 (63.5) | — | — |
| i | 0.50 (12.7) | 0.75 (19.1) | 1.00 (25.4) | 1.25 (31.8) | 1.50 (38.1) |
| j | 1.00 (25.4) | 1.25 (31.8) | 1.50 (38.1) | — | — |
| k | 1.25 (31.8) | 1.50 (38.1) | 2.00 (50.8) | — | — |
| m | 0.75 (19.1) | 1.00 (25.4) | 1.25 (31.8) | 1.50 (38.1) | 2.00 (50.8) |
| n | 0.75 (19.1) | 1.00 (25.4) | 1.25 (31.8) | 1.50 (38.1) | — |
| p | 2.00 (50.8) | 2.50 (63.5) | — | — | — |

## Knockout Diagram

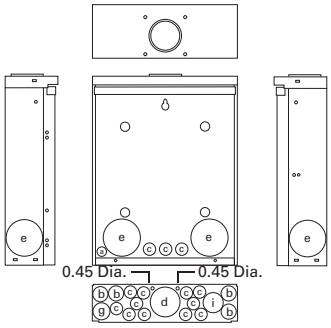


***Outdoor Boxes***
***12–42 Circuits 225 A Maximum***

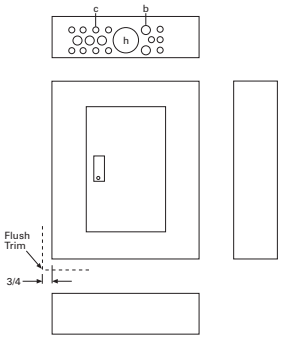


***Box P, PM***

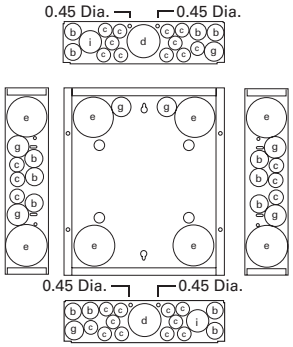


***Box B***

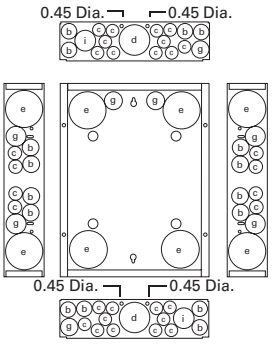


***Box C, D, E, G, J, K, L, N***

## Type ECB and ECC Unit Enclosure Knockout

| Code | Diameter | | | | |
|---|---|---|---|---|---|
| **NEMA Type 1 Indoor (Flush and Surface Trims)** | | | | | |
| A | 0.50 (12.7) | — | — | — | — |
| B | 1.25 (31.8) | 1.50 (38.1) | 1.75 (44.5) | 2.00 (50.8) | 2.50 (63.5) |
| **NEMA Type 3R Outdoor** | | | | | |
| A | 0.50 (12.7) | — | — | — | — |
| B | 1.25 (31.8) | 1.50 (38.1) | 1.75 (44.5) | 2.00 (50.8) | 2.50 (63.5) |

## NEMA Type 1—Indoor

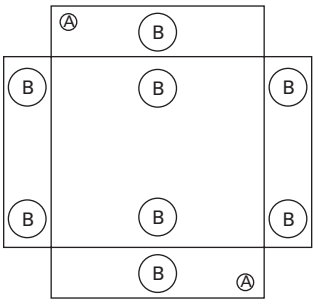


## NEMA Type 3R—Outdoor

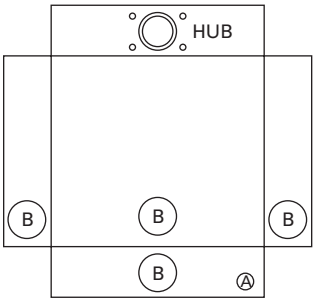

## Technical Data and Specifications

### General

A. The Contractor shall furnish and install loadcenters incorporating circuit breakers of the number, rating and type as specified herein and as shown on the contract drawings.

B. The loadcenter and all components shall be designed, manufactured and tested in accordance with the latest applicable standards of UL and NEMA including:

1. UL 67—standards for panelboards
2. UL 50—standards for cabinets and boxes
3. UL 489—standards for molded case circuit breakers
4. Federal Spec Classification W-C 375
5. UL 1699—all fault interrupting

### Qualifications

A. The manufacturer of the loadcenter shall be the manufacturer of the circuit breaker within the load center. All breakers shall be full size.

B. For the equipment specified herein, the manufacturer shall be ISO® 9000 certified.

C. The manufacturer of this equipment shall have produced similar electrical equipment for a minimum period of seven (7) years.

### Manufacturers

A. Eaton

### Ratings

A. Loadcenters shall be rated for 240 Vac and shall have short-circuit ratings as shown on the drawings or as herein scheduled, but not less than 10,000 amperes rms symmetrical.

B. Breakers shall be full size and a minimum of 125 A frame. Breakers 10 –125 A trip size shall take up the same pole spacing.

C. Loadcenters shall be labeled with a UL short-circuit rating. When series ratings are applied with integral or remote devices, a label shall be provided. Series ratings shall cover all trip ratings of installed frames. It shall state the conditions of the UL series ratings including:

1. Size and type of upstream device.
2. Branch devices that can be used.
3. UL series short-circuit rating.

### Construction

A. All interiors, with the exception of the branch circuit breakers shall be completely factory assembled with main breakers, main lugs or no main device.

B. Interiors shall be so designed that circuit breakers can be replaced without disturbing adjacent units and without removing the main bus connectors and shall be so designed that circuits may be changed without machining, drilling or tapping.

C. Physical means must be provided to prevent the installation of more overcurrent devices than that number for which the enclosure was designed. Full size breakers are required.

### Bus

A. Busbars for the main and cross connectors shall be of silver flash plated copper construction in accordance with UL standards. Bussing shall be braced to 65 kAIC.

B. Neutral bussing shall have a suitable lug for each outgoing feeder requiring a neutral connection of same ampacity as branch.

### Wiring/Termination

A. All wire connectors and terminals shall be of the anti-turn solderless type and suitable for copper or aluminum wire of the sizes indicated. All connectors shall meet the "Requirements for Wire Connectors and Soldering Lugs" UL 486B.

B. All loadcenters where marked shall be suitable for use with 60/75 °C rated wire.

### Circuit Breakers

A. Circuit breakers shall be molded case type, 3/4-inch (19.1 mm) wide per pole. Multipole circuit breakers shall be of a stack pole design to provide electrical phase isolation and have an internal common trip.

B. Each pole of the circuit breaker will have inverse time delay overload and instantaneous short-circuit protection by means of both thermal and magnetic sensors. Circuit breakers shall be quick-make/quick-break.

C. The circuit breaker calibration shall not be affected by environmental changes in relative humidity. Breakers shall be calibrated after assembly.

D. All circuit breakers shall be operated by a toggle-type handle and multipole circuit breakers shall have an internal common trip mechanism. The circuit breakers shall incorporate trip mechanisms that are mechanically trip-free from the handle. The handle position shall provide good visual trip indication.

E. Contacts shall be of non-welding silver alloy.

F. All branch breaker handles shall be of a different color than the case of the breaker.

G. All terminals shall be listed for use with copper or aluminum conductors. Terminals shall be of the box lug design. The terminals shall meet UL 486B requirements and shall be suitable for use with either 60 °C or 75 °C wire.

H. Breakers shall be SWD rated and/or HACR rated as required.

I. Arc fault interrupting circuit breakers, (AFC), shall be provided on all 15 and 20 A single-phase 120/240 Vac circuits except those indicated as remote controlled breakers. AFI breakers shall be "Classified for mitigating the effects of arcing faults," or conforming to UL Standard 1699 and as defined by per Article 210.12 Section A of the NEC Code.

**Enclosures**

A. Loadcenters shall have NEMA 1 general purpose or NEMA 3R rainproof enclosures as indicated on the drawings and shall be surface or flush mounted except where noted.

B. For indoor applications, enclosures shall be rated NEMA 1. Enclosures shall be manufactured from cold-rolled code-gauge sheet steel having multiple knockouts and painted per paint specification. For outdoor applications, enclosures shall be rated NEMA 3R. Enclosures shall be manufactured from galvanized steel which shall be painted per the painted as specified. Enclosures shall be of sufficient size to meet or exceed NEC wire bending space.

C. The cover shall have an easy adjustment feature for flush applications.

D. Boxes shall be factory assembled into a single rigid structure.

E. Provide circuit breaker marking labels and directories.

**Finish**

A. Boxes and trims shall be finished with a high scratch-resistant aesthetically pleasing finish. The finish shall be polyurethane coating electrostatically applied to a thickness of 1.8 to 2 mils.

All loadcenters shall be provided with provisions for accepting a paintable or wall paperable decorator accessory cover. Where loadcenters are installed in living areas, provide manufacturer designed and tested decorator cover kits.

Plug-On Circuit Breakers

## Contents


| *Description* | *Page* |
|---|---|
| Overview | **V1-T1-2** |
| CH Specialty Products | **V1-T1-14** |
| CH Loadcenter Options and Accessories | **V1-T1-22** |
| CH Circuit Breakers | |
| Product Selection | **V1-T1-32** |
| Options and Accessories | **V1-T1-38** |
| Technical Data and Specifications | **V1-T1-40** |
| Wiring Diagrams | **V1-T1-40** |


## CH Circuit Breakers

### Product Description

Quick-make, quick-break switch mechanism combined with inverse time element tripping operation and trip-free handle design. Type CH circuit breakers trip to the OFF position, eliminating nuisance callbacks. The CHF family also includes a trip flag to differentiate between a trip and the breaker being turned off. The thermal-magnetic trip curve avoids nuisance tripping on mild overloads while reacting almost instantaneously to severe short-circuit conditions. Multipole breakers have internal common trip connection to operate all poles simultaneously. Handles are marked with ON-OFF indication and ampere rating of the breaker.

***Special Application Plug-On Circuit Breakers—Type CH 10 kAIC 120 Vac and 120/240 Vac***

**Branch Feeder Type Arc Fault Circuit Breakers**
A branch feeder type arc fault circuit interrupter is a device intended to mitigate high current arcing faults in the complete circuit, including connected cords. High current arcing faults can occur from line to neutral or line to ground. These arcing faults are in parallel with the load and produce the most energy of all arcing faults.

The branch feeder type AFCI is required in the 1999 and 2002 National Electrical Code.

The Combination Type AFCI is required in all subsequent editions of the National Electrical Code.

**Combination Type Arc Fault Circuit Breakers**
A combination type arc fault circuit interrupter is a device that offers mitigation of high current arcing faults in the complete circuit, including connected cords. In addition it provides direct detection of persistent low current arcing faults down to 5 amps with associated mitigation of fire hazards in the cords connected to the outlets. High current arcing faults can occur from line to neutral or line to ground. These arcing faults are in parallel with the load and produce the most energy of all arcing faults. The current level of low current arcing faults is limited by the load.

**Ground Fault Circuit Breakers—Ground Fault Application Notes**
Single-pole Type CHGFIs are designed for use in two-wire, 120 Vac circuits. The diagram on **Page V1-T1-40** shows a typical wiring configuration.

Two-pole Type CHGFIs are designed for use in three-wire, 120/240 Vac circuits, 120 Vac multiwire circuits employing common, neutral and two-wire, 240 Vac circuits obtained from a 120/240 Vac source.

Diagrams on **Page V1-T1-40** illustrate typical wiring configurations for 120/240 Vac multiwire circuits.

The diagram on **Page V1-T1-40** depicts a 240 Vac, two-wire circuit. Note the "panel neutral" conductor connects to the neutral bar, even though the neutral is not included in the load circuit. This connection is necessary to supply a 120 Vac power source to the ground fault sensing circuit.

The figures are shown with a 120/240 Vac, single-phase, three-wire power source, but are also applicable to a 120/208 Vac, three-phase, four-wire power supply. For all figures, the electrical operation of the Type CHGFI is not affected by the equipment ground.

### Features

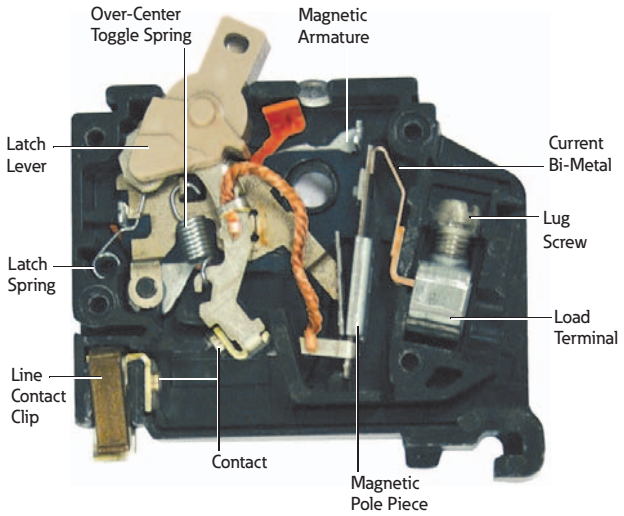

1

## Product Selection

***10 kAIC, 120 Vac, 120/240 Vac and 240 Vac***

**Type CH Plug-On Circuit Breakers**

### Type CH Breakers, 3/4-Inch (19.1 mm) per Pole 120, 120/240 or 240 Vac, 10 kAIC

| Ampere Rating | Wire Size Range Cu/Al 60 °C or 75 °C | Catalog Number<br>Single-Pole 120/240 Vac Requires One 3/4-Inch (19.1 mm) Space 10 per Shelf Carton | Two-Pole 120/240 Vac Common Trip Requires Two 3/4-Inch (19.1 mm) Spaces 5 per Shelf Carton | Three-Pole 240 Vac Common Trip Requires Three 3/4-Inch (19.1 mm) Spaces 5 per Shelf Carton |
|---|---|---|---|---|
| 10 | (1) #14–8 ①<br>(2) #14–10 ①②<br>(1) #14–6 ③ | **CH110** | **CH210** | **CH310** |
| 15 | | **CH115** ⑦⑧ | **CH215** ⑧ | **CH315** ⑧ |
| 20 | | **CH120** ⑦⑧ | **CH220** ⑧ | **CH320** ⑧ |
| 25 | | **CH125** ⑧ | **CH225** ⑧ | **CH325** ⑧ |
| 30 | | **CH130** ⑧ | **CH230** ⑧ | **CH330** ⑧ |
| 35 | #14–2 ①<br>#14–6 ③ | **CH135** ⑧ | **CH235** ⑧ | **CH335** ⑧ |
| 40 | #10–1/0 ④<br>#14–2 ⑤<br>#3/0 ⑥ | **CH140** ⑧ | **CH240** ⑧ | **CH340** ⑧ |
| 45 | | **CH145** ⑧ | **CH245** ⑧ | **CH345** ⑧ |
| 50 | | **CH150** ⑧ | **CH250** ⑧ | **CH350** ⑧ |
| 60 | | **CH160** | **CH260** | **CH360** |
| 70 | | **CH170** | **CH270** | **CH370** |
| 80 | | — | **CH280** | **CH3080** |
| 90 | | — | **CH290** | **CH3090** |
| 100 | | — | **CH2100** | **CH3100** |
| 110 | | — | **CH2110** | — |
| 125 | | — | **CH2125** | — |

**Type CH Plug-On Circuit Breakers**

### CHF Breakers with Mechanical Trip Flag

| Ampere Rating | Wire Size Range Cu/Al 60 °C or 75 °C | Catalog Number<br>Single-Pole 120/240 Vac Requires One 3/4-Inch (19.1 mm) Space 10 per Shelf Carton | Two-Pole 120/240 Vac Common Trip Requires Two 3/4-Inch (19.1 mm) Spaces 5 per Shelf Carton |
|---|---|---|---|
| 10 | (1) #14–8 ①<br>(2) #14–10 ①② | **CHF110** | **CHF210** |
| 15 | | **CHF115** ⑦⑧ | **CHF215** ⑧ |
| 20 | | **CHF120** ⑦⑧ | **CHF220** ⑧ |
| 25 | | **CHF125** ⑧ | **CHF225** ⑧ |
| 30 | | **CHF130** ⑧ | **CHF230** ⑧ |
| 35 | #14–2 ① | **CHF135** ⑧ | **CHF235** ⑧ |
| 40 | #10–1/0 ④<br>#14–2 ⑤ | **CHF140** ⑧ | **CHF240** ⑧ |
| 45 | | **CHF145** ⑧ | **CHF245** ⑧ |
| 50 | | **CHF150** ⑧ | **CHF250** ⑧ |

***Notes***

① For single- and two-pole breakers.
② Solid and stranded wire can be used together.
③ For three-pole breakers.
④ Single-pole 60–70 A, two-pole 80–125 A, three-pole 40–100 A.
⑤ Single-pole 40–50 A, two-pole 40–70 A.
⑥ Two-pole 150 A.
⑦ Switching duty rated.
⑧ HACR rated.

For factory-installed options, refer to **Page V1-T1-39.**

### *Type CH AF/GF Single-Pole Circuit Breaker*

**Type CH AFCI Single-Pole Circuit Breaker**

## Dual Purpose Arc Fault/Ground Fault 3/4-Inch (19.1 mm) Wide Circuit Breakers, Type CH, 120 Vac—10 kAIC ①②

| Poles | Ampere Rating | Configuration | Catalog Number |
|---|---|---|---|
| Single-pole 10 kAIC | 15 | Combination AFCI GFCI | **CHFAFGF115** ③ |
| | 20 | Combination AFCI GFCI | **CHFAFGF120** ③ |
| Single-pole, plug-on neutral 10 kAIC | 15 | Combination AFCI GFCI | **CHFAFGF115PN** |
| | 20 | Combination AFCI GFCI | **CHFAFGF120PN** |

### *Plug-On Branch Feeder Type Arc Fault Circuit Breakers, Type CH 10 kAIC, 120 Vac and 120/240 Vac*

**Type CH AFCI Single-Pole Circuit Breaker**

## Combination Type CH AFCI 3/4-Inch (19.1 mm) Wide Circuit Breakers

| Poles | Ampere Rating | Catalog Number |
|---|---|---|
| **Standard Pigtail** | | |
| Single-pole 10 kAIC | 15 | **CHFCAF115** |
| | 20 | **CHFCAF120** |
| Two-pole 10 kAIC | 15 | **CH215CAF** |
| | 20 | **CH220CAF** |

**Type CH AFCI Single-Pole Circuit Breaker**

## Branch Type CH AFCI 3/4-Inch (19.1 mm) Wide FIRE-GUARD® Circuit Breakers

| Poles | Ampere Rating | Configuration | Catalog Number |
|---|---|---|---|
| Single-pole 10 kAIC | 15 | AFCI | **CH115AF** ③ |
| | 20 | AFCI | **CH120AF** ③ |
| Two-pole 10 kAIC ④⑤ | 15 | AFCI common trip | **CH215AF** |
| | 20 | AFCI common trip | **CH220AF** |

### *Plug-On Combination Type Arc Fault Circuit Breakers and Ground Fault, Type CH 10 kAIC, 120 Vac and 120/240 Vac* ⑥

**Type CH AFCI Single-Pole PON Combo Circuit Breaker**

## Combination Type CH AFCI 3/4-Inch (19.1 mm) and CHGFCI Circuit Breakers

| Poles | Ampere Rating | Configuration | Catalog Number |
|---|---|---|---|
| Single-pole 10 kAIC | 15 | AFCI plug-on neutral | **CHFCAF115PN** |
| | 20 | AFCI plug-on neutral | **CHFCAF120PN** |
| | 15 | GFCI plug-on neutral | **CHFGF115PN** |
| | 20 | | **CHFGF120PN** |
| | 25 | | **CHFGF125PN** |
| | 30 | | **CHFGF130PN** |

***Notes***

① Breaker qualifies as combination arc fault, per UL 1699.
② Breaker qualifies as personnel protection ground fault, (5 mA) per UL 943.
③ Clamshell packaging available with CS modification code on the end of catalog number.
④ Common trip refers to two-pole 240 V load application sourced by 120/240 Vac (see diagram on **Page V1-T1-40**).
⑤ Independent trip refers to two-pole multi-wire, home run or shared neutral circuits (see diagrams on **Page V1-T1-40**).
⑥ Requires plug-on neutral loadcenter.

### *Plug-On Ground Fault Circuit Breakers, Type CH 10 kAIC, 120 Vac and 120/240 Vac*

**Type CH Single-Pole**

## Type CH Ground Fault Circuit Breakers (5 Milliampere) 3/4-Inch (19.1 mm) per Pole 120 Vac or 120/240 Vac,10 kAIC

| Ampere Rating | Wire Size Range Cu/Al 60 °C or 75 °C ① | Catalog Number—1 per Shelf Carton<br>Single-Pole 120 Vac Requires One 3/4-Inch (19.1 mm) Space | Two-Pole 120/240 Vac Common Trip Requires Two 3/4-Inch (19.1 mm) Spaces |
|---|---|---|---|
| 15 | #14–6 | CHFGF115 | CH215GF |
| 20 | #14–6 | CHFGF120 | CH220GF |
| 25 | #14–6 | CHFGF125 | CH225GF |
| 30 | #14–6 | CHFGF130 | CH230GF |
| 35 | #14–6 | — | CH235GF |
| 40 | #14–6 | — | CH240GF |
| 45 | #14–6 | — | CH245GF |
| 50 | #14–6 | — | CH250GF |
| 60 | #14–6 ① | — | CH260GF |

**Type CH Two-Pole**

## Type CH Ground Fault Equipment Protectors (30 Milliampere) 3/4-Inch (19.1 mm) per Pole 120 Vac or 120/240 Vac, 10 kAIC

| Ampere Rating | Wire Size Range Cu/Al 60 °C or 75 °C ① | Catalog Number—1 per Shelf Carton<br>Single-Pole 120 Vac Requires One 3/4-Inch (19.1 mm) Space | Two-Pole 120/240 Vac Common Trip Requires Two 3/4-Inch (19.1 mm) Spaces |
|---|---|---|---|
| 15 | #14–6 | CHFEP115 | CH215EPD |
| 20 | #14–6 | CHFEP120 | CH220EPD |
| 25 | #14–6 | CHFEP125 | — |
| 30 | #14–6 | CHFEP130 | CH230EPD |
| 40 | #14–6 | — | CH240EPD |
| 50 | #14–6 | — | CH250EPD |
| 60 | #14–6 ① | — | CH260EPD |

### *Type CH Switching Neutral Breakers—10 kAIC, 120 Vac and 120/240 Vac*

Used to open the neutral along power line(s) for applications of gas pumps.

**CH220SW**

## 3/4-Inch (19.1 mm) per Pole 120/240 or 240 Vac, 10 kAIC

| Ampere Rating | Wire Size Range Cu/Al 60 °C or 75 °C | Catalog Number—1 per Shelf Carton<br>Two-Pole 120 Vac Common Trip Requires Two 3/4-Inch (19.1 mm) Spaces<br>(Hot leg) Neutral Out Neutral In | Three-Pole 120/240 Vac Common Trip Requires Three 3/4-Inch (19.1 mm) Spaces<br>Phase Phase Neutral Out Neutral In |
|---|---|---|---|
| 15 | #14–8 | CH215SW ② | CH315SW ③ |
| 20 | #14–8 | CH220SW ② | CH320SW ③ |
| 30 | #14–8 | CH230SW ② | CH330SW ③ |
| 40 | #14–8 | CH240SW ② | CH340SW ③ |
| 50 | #14–8 | CH250SW ② | CH350SW ③ |

***Notes***

① 60 A breaker listed for 75 °C Cu wire only.

② For circuit breakers with shunt trip, add ST suffix. Shunt trip requires one additional pole space.

③ Switching duty rated.

***Type CH-HID Circuit Breakers—10 kAIC, 120 Vac, 120/240 and 240 Vac***

Suitable for use in circuits for fluorescent and high intensity discharge lighting. Also suitable for HACR applications.

### 3/4-Inch (19.1 mm) per Pole 120 Vac, 120/240 and 240 Vac, 10 kAIC

| Ampere Rating | Wire Size Range Cu/Al 60 °C or 75 °C | Single-Pole 120/240 Vac Requires One 3/4-Inch (19.1 mm) Space<br>10 per Shelf Carton Catalog Number | Two-Pole 240 Vac Common Trip Requires Two 3/4-Inch (19.1 mm) Spaces<br>5 per Shelf Carton Catalog Number | Three-Pole 240 Vac Common Trip Requires Three 3/4-Inch (19.1 mm) Spaces<br>5 per Shelf Carton Catalog Number |
|---|---|---|---|---|
| 15 | #14–8 | **CH115HID** | **CH215HID** ① | **CH315HID** |
| 20 | #14–8 | **CH120HID** | **CH220HID** | **CH320HID** |
| 30 | #14–8 | **CH130HID** | **CH230HID** | **CH330HID** |

***Type CHT Twin 10 kAIC, 120/240 Vac, Universal CTL and Non-CTL Plug-On Circuit Breakers***

Suitable for CTL and Non-CTL CH loadcenters.

**Type CH and CHT Circuit Breakers Mounted in Twin Breaker Panel**

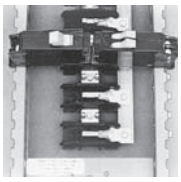

### Twin (CTL) 3/4-Inch (19.1 mm) per Pole 120 Vac Class CTL 10 kAIC

| Ampere Rating | Wire Size Range Cu/Al 60 °C or 75 °C | Single-Pole Requires One 3/4-Inch (19.1 mm) Space<br>10 per Shelf Carton Catalog Number<br>120/240 Vac 120/240 Vac |
|---|---|---|
| 15–15 | #14–8 | **CHT1515** ②③ |
| 15–20 | #14–8 | **CHT1520** ②③ |
| 20–20 | #14–8 | **CHT2020** ②③ |

***Notes***

① CH215HID is rated for 120/240 V.
② Switching duty rated.
③ HACR rated.

### *Type CHP Commercial Breakers—10 kAIC, 120 Vac, 120/240 Vac and 240 Vac*

**Note:** CHP breakers feature on-off and trip positions for commercial applications.

#### 3/4-Inch (19.1 mm) per Pole 120, 120/240 or 240 Vac, 10 kAIC

| Ampere Rating | Wire Size Range Cu/Al 60 °C or 75 °C | Single-Pole 120/240 Vac Requires One 3/4-Inch (19.1 mm) Space<br>10 per Shelf Carton Catalog Number | Two-Pole 120/240 Vac Common Trip Requires Two 3/4-Inch (19.1 mm) Spaces<br>5 per Shelf Carton Catalog Number | Three-Pole 240 Vac Common Trip Requires Three 3/4-Inch (19.1 mm) Spaces<br>5 per Shelf Carton Catalog Number |
|---|---|---|---|---|
| 10 | (1) #14–8 ① (2) #14–10 ①② (1) #14–6 ③ | **CHP110** | **CHP210** | **CHP310** |
| 15 | | **CHP115** ⑥⑦ | **CHP215** ⑦ | **CHP315** ⑦ |
| 20 | | **CHP120** ⑥⑦ | **CHP220** ⑦ | **CHP320** ⑦ |
| 25 | | **CHP125** ⑦ | **CHP225** ⑦ | **CHP325** ⑦ |
| 30 | | **CHP130** ⑦ | **CHP230** ⑦ | **CHP330** ⑦ |
| 35 | #14–2 ① #14–6 ③ | **CHP135** ⑦ | **CHP235** ⑦ | **CHP335** ⑦ |
| 40 | #10–1/0 ④ #14–2 ⑤ | **CHP140** ⑦ | **CHP240** ⑦ | **CHP340** ⑦ |
| 45 | | **CHP145** ⑦ | **CHP245** ⑦ | **CHP345** ⑦ |
| 50 | | **CHP150** ⑦ | **CHP250** ⑦ | **CHP350** ⑦ |
| 60 | | **CHP160** ⑦ | **CHP260** ⑦ | **CHP360** ⑦ |
| 70 | | **CHP170** | **CHP270** | **CHP370** |
| 80 | | — | **CHP280** | — |
| 90 | | — | **CHP290** | — |
| 100 | | — | **CHP2100** | **CHP3100** |
| 110 | | — | **CHP2110** | — |
| 125 | | — | **CHP2125** | — |

### *Type CHP-GFCI Circuit Breakers—10 kAIC, 120 Vac and 120/240 Vac*

**Note:** CHP breakers offer on-off and trip positions for commercial applications.

#### 5 Milliampere—3/4-Inch (19.1 mm) per Pole 120 V and 120/240 Vac, 10 kAIC

| Ampere Rating | Wire Size Range Cu/Al 60 °C or 75 °C | Single-Pole 120 Vac Requires One 3/4-Inch (19.1 mm) Space<br>1 per Individual Carton Catalog Number |
|---|---|---|
| 15 | #14–6 | **CHP115GF** |
| 20 | #14–6 | **CHP120GF** |
| 30 | #14–6 | **CHP130GF** |

***Notes***

① For single- and two-pole breakers.
② Solid and stranded wire can be used together.
③ For three-pole breakers.
④ Single-pole 60–70 A, two-pole 80–125 A, three-pole 40–100 A.
⑤ Single-pole 40–50 A, two-pole 40–70 A.
⑥ Switching duty rated.
⑦ HACR rated.

CHP breakers offer on-off and trip positions for commercial applications.

### *Type CHP Neutral Switching Breakers—10 kAIC, 120 Vac and 120/240 Vac*

Used to open the neutral along power line(s) for applications of gas pumps.

#### 3/4-Inch (19.1 mm) per Pole 120 or 120/240 Vac, 10 kAIC

| Ampere Rating | Wire Size Range Cu/Al 60 °C or 75 °C | Two-Pole 120 Vac Common Trip Requires Two 3/4-Inch (19.1 mm) Spaces<br>1 per Shelf Carton<br>Catalog Number<br>(Hot leg)<br>Neutral Out<br>Neutral In | Three-Pole 120/240 Vac Common Trip Requires Three 3/4-Inch (19.1 mm) Spaces<br>1 per Shelf Carton<br>Catalog Number<br>Phase<br>Phase<br>Neutral Out<br>Neutral In |
|---|---|---|---|
| 15 | #14–8 | **CHP215SW** ① | **CHP315SW** ① |
| 20 | #14–8 | **CHP220SW** ① | **CHP320SW** ① |

### *Type CH-M50 High Ambient Breaker*

#### 3/4-Inch (19.1 mm) per Pole 120 or 120/240 Vac, 10 kAIC

| Ampere Rating | Wire Size Range Cu/Al 60 °C or 75 °C | Single-Pole 120/240 Vac Requires One 3/4-Inch (19.1 mm) Space<br>10 per Shelf Carton<br>Catalog Number | Two-Pole 120/240 Vac Common Trip Requires Two 3/4-Inch (19.1 mm) Spaces<br>5 per Shelf Carton<br>Catalog Number |
|---|---|---|---|
| 15 | (1) #14–8<br>(2) #14–10 | **CH115M50** | **CH215M50** |
| 20 | | **CH120M50** | **CH220M50** |
| 25 | | **CH125M50** | **CH225M50** |
| 30 | | **CH130M50** | **CH230M50** |
| 35 | | **CH135M50** | **CH235M50** |
| 40 | | **CH140M50** | **CH240M50** |
| 45 | | **CH145M50** | **CH245M50** |
| 50 | | **CH150M50** | **CH250M50** |
| 60 | | — | **CH260M50** |
| 70 | | — | **CH270M50** |

### *Type CH-HM and CHP-HM High Magnetic Breakers*

#### 3/4-Inch (19.1 mm) per Pole 120 or 120/240 Vac, 10 kAIC

| Ampere Rating | Wire Size Range Cu/Al 60 °C or 75 °C | Single-Pole 120/240 Vac Requires One 3/4-Inch (19.1 mm) Space<br>10 per Shelf Carton<br>Catalog Number | Two-Pole 120/240 Vac Common Trip Requires Two 3/4-Inch (19.1 mm) Spaces<br>5 per Shelf Carton<br>Catalog Number |
|---|---|---|---|
| 15 | (1) #14–8<br>(2) #14–10 | **CH115HM** | **CH215HM** |
| 20 | | **CH120HM** | **CH220HM** |
| 15 | (1) #14–8<br>(2) #14–10 | **CHP115HM** | **CHP215HM** |
| 20 | | **CHP120HM** | **CHP220HM** |

***Note***

① For circuit breakers with shunt trip, add ST suffix. Shunt trip requires one additional pole space, obtain pricing from **Page V1-T1-39**.

## 1 Options and Accessories

CHHT

CHPL

CHPLGF

MCBPL

CHLO

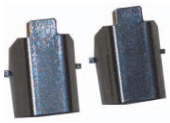

CH125RB

CH9MB270

CHML

### Field Installation Kits and Parts

| Description | Ordering Quantity ① | Catalog Number |
|---|---|---|
| **Handle Ties ②** | | |
| Handle tie bar for physically joining the handles of two adjacent single-pole Type CH circuit breakers (molded plastic handle cover) | 25 | **CHHT** |
| **Handle Lockoffs ③④** | | |
| Padlockable device for locking the handle of single-, two- or three-pole Type CH circuit breakers (escutcheon mounted) ⑤ | 1 | **CHPL** |
| Padlockable device for locking the handle of a single-, two- or three-pole Type CHGFI circuit breaker (escutcheon mounted) ⑤ | 1 | **CHPLGF** |
| Padlockable device for locking the handle of main circuit breaker Types CC and CCH into the ON or OFF position.(screw mounted) ⑥ | 1 | **CCPL** |
| Padlockable device for locking the handle of main breaker Types BW and CSR into the ON or OFF position (escutcheon mounted) ⑤ | 1 | **MCBPL** |
| **Handle Lockdogs ④⑦** | | |
| Device used to secure handle in ON or OFF position for single-pole Type CH circuit breakers (handle mounted) ⑧ | 10 | **CHLO** |
| **Hold-Down Kits ⑨** | | |
| Hold-down retainer kit for single-, two-, three-pole Type CH circuit breakers. For 6–24 circuit 125 A single- and three-phase, 12–42 circuit single-phase 225 A and 24–42 circuit three-phase 225 A MLO Type CH loadcenters | 1 | **CH125RB** |
| Hold-down retainer kit for single-, two-, three-pole Type CH circuit breakers for 2–4 circuit MLO CH loadcenters. | 1 | **CH125RB24** |
| **Mounting Bases** | | |
| Mounting base for two-pole Type CH circuit breaker—70 A maximum | 1 | **CH9MB270** |
| **Main Breaker Lug Kits** | | |
| Types CC and CCH main breaker lug kit (2) 300 kcmil | 1 | **CCL300** |
| Type CSR main breaker lug kit (2) 300 kcmil | 1 | **MCBL300** |
| **Mechanical Interlock** | | |
| Type CH for two-, three- and four-pole breakers | 10 | **CHML ⑩** |

***Notes***

① Must be purchased in multiples of ordering quantities indicated.
② Handle ties: typically used to join two similar independent single-pole breakers to form a two-pole noncommon trip breaker.
③ Handle lockoffs: devices that use a padlock to lock the circuit breaker's handle in the ON or OFF position.
④ Requires one additional pole space.
⑤ Escutcheon mounted: device mounted semipermanently to the face of the circuit breaker and secured by the loadcenter deadfront.
⑥ Screw mounted: device permanently mounted to the face of the circuit breaker by the use of a non-removable screw.
⑦ Handle lockdogs: devices that are used to secure a circuit breaker's handle in the ON or OFF position. Handle lockdogs are not padlockable devices.
⑧ Handle mounted: device mounted above or below handle using spring pressure.
⑨ Hold-down kits: devices used to secure the circuit breaker to the loadcenter for back-feed main application. See NEC Article 384.16(g).
⑩ CHML not suitable to transfer emergency power.

## Shunt Trip Options

| Description Type | Volts | Catalog Number Suffix Adder ① |
|---|---|---|
| CSR | 12 DC | **SR12** |
| CSR | 24 DC | **SR24** |
| CSR | 120 AC | **SR01** |
| CH | 120 AC | **ST** ② |
| CC | 12 DC | **SR12** |
| CC | 24 DC | **SR24** |
| CC | 120 AC | **SR01** |
| CC | 208 AC | **SR08** |
| CC | 240 AC | **SR02** |

## Handle Position Changeability Chart

| | To Change Handle Position from ON to OFF or OFF to ON You Must... | | |
|---|---|---|---|
| **Handle Lockoff and Lockdog Types** | **Remove Padlock** | **Remove Device** | **Remove Loadcenter Deadfront** |
| Lockoff escutcheon mounted | Remove | — | — |
| Lockoff screw mounted | Remove | — | — |
| Lockdog handle mounted | N/A | Remove | — |

***Notes***

① Add suffix indicated to end of breaker catalog number.

② Requires one additional pole space.

## Technical Data and Specifications

### *Ratings*

Single- and two-pole CH breakers rated 15 and 20 A have low instantaneous magnetic trip levels. The 15 and 20 A breakers with "HM" suffix have high magnetic trip settings recommended for circuits with inherently high inrush currents. All Type CH breakers are marked for heating, air conditioning and refrigeration (HACR) equipment application. Single-pole 15–20 A breakers are also suitable for switching duty (SWD). Shunt trip coils operate on 120 Vac and require one additional pole space per breaker.

## Wiring Diagrams

### Typical Single-Pole

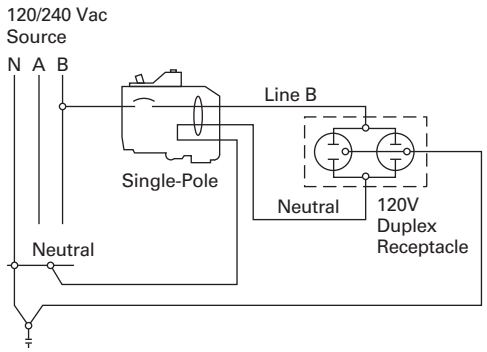


### Two-Pole 240 V Load Application Sourced by 120/240 Vac

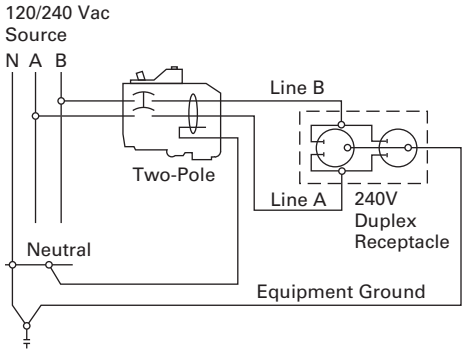


### Single-Pole 120 V Load Application Sourced by 120/240 Vac

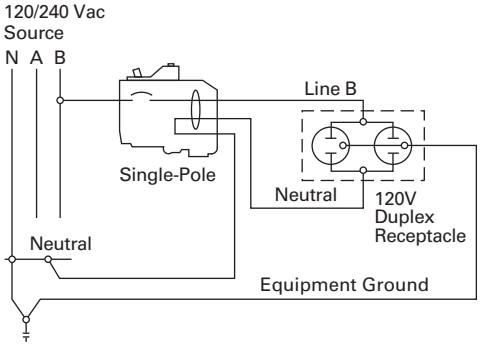


### Two-Pole Shared Neutral with Duplex Receptacle Application

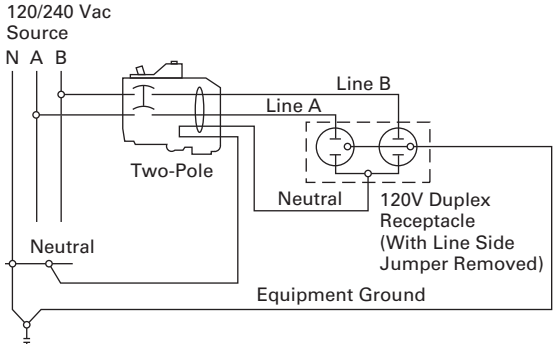


### Two-Pole Shared Neutral with Multi-Duplex Receptacle Application

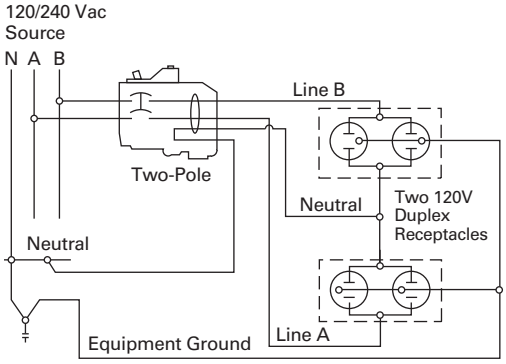


### Single-Pole 120 V Duplex Receptacle Application

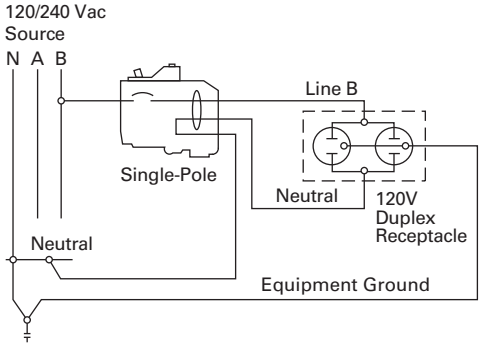

### Two-Pole 120 V Multi-Duplex Receptacle Application

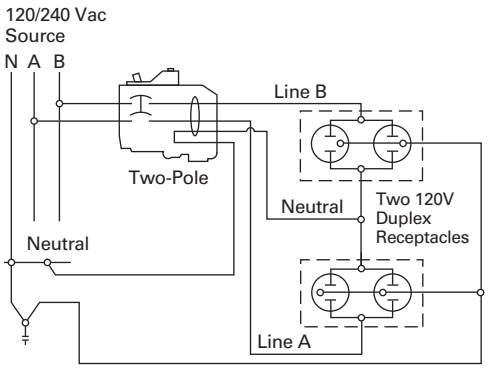


### Two-Pole 120 V Duplex Receptacle Application

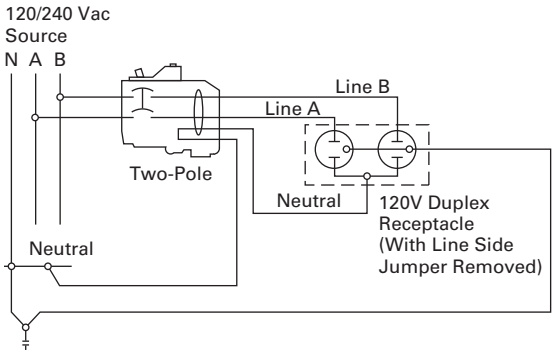


### Two-Pole 240 V Duplex Receptacle Application

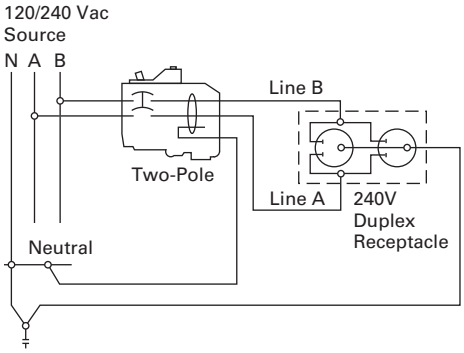

**Type BR Loadcenters and Circuit Breakers**

## Contents


| *Description* | *Page* |
|---|---|
| Overview | |
| Product Description | **V1-T1-43** |
| Features, Benefits and Functions | **V1-T1-43** |
| Standards and Certifications | **V1-T1-45** |
| Catalog Number Selection | **V1-T1-45** |
| Product Selection | **V1-T1-46** |
| BR Specialty Products | |
| BR Quick Connect Neutral Loadcenters | **V1-T1-57** |
| Spa Panels | **V1-T1-58** |
| Riser Panel | **V1-T1-59** |
| Type BR Renovation Loadcenter | **V1-T1-60** |
| Type BR Mechanical Interlock Kits | **V1-T1-62** |
| Type BR Retrofit Interior Kits | **V1-T1-73** |
| BR Circuit Breakers | **V1-T1-76** |


# Overview

## Product Selection Guide

### BR Loadcenters

**Description**

| | |
|---|---|
| **Service** | |
| Single-phase, three-wire, 120/240 Vac | Three-phase, four-wire, 208Y/120 Vac<br>Three-phase, three-wire, 240 Vac delta |
| **Short-Circuit Current Rating** | |
| 10 kAIC: All single- and three-phase loadcenters 70–225 A, 8 to 42 circuits<br>22 kAIC: All convertible loadcenters using 125 A rated Type BRH main breakers or selected factory installed 125 A rated Type BRH main breaker | 25 kAIC: All convertible and factory-installed single-phase loadcenters rated 150 and 200 A using Type CSR main breakers |
| **Main Breaker/Main Lug Loadcenters** | |
| Single-phase<br>Main breaker: 100, 125, 150, 200, 225, 400, 600 A<br>Main lugs: 70, 125, 150, 200, 225, 400, 600 A | Three-phase<br>Main breaker: 100, 125, 150, 200, 225, 400, 600 A<br>Main lugs: 100, 125, 150, 200, 225, 400, 600 A |
| **Convertible Loadcenters** | |
| Main breaker: single-phase up to 200 A and three-phase up to 225 A | Main lugs: single-phase up to 200 A and three-phase up to 150 A |
| **Branch Breakers** | |
| Types BR, BRH and BRHH: 10–150 A. single-, two- and three-pole; selected amperage available in switching duty, HACR, shunt trip and high magnetic setting<br>Type GFCB: 15–60 A<br>Types BJ and BJH: 125–225 A; two- and three-pole<br>Type BD Twin: 10–50 A; two of one-pole; take one 1-inch (25.4 mm) space | Type BQ and BQC Multibreaker: 15–30 A. Two of two-pole or one two-pole and two one-pole; takes two 1-inch (25.4 mm) spaces<br>Type BRW: 15–30 A; two-pole water heater breakers<br>Type BRSN: 15–30 A; two-pole switching neutral breakers<br>Type BR 15–100 A; two-pole, 240 Vac delta breakers<br>BR-AFCI arc fault circuit interrupter |
| **Enclosures** | |
| NEMA Type 1 indoor<br>NEMA Type 3R outdoor | NEMA 4X<br>Meets or exceeds UL requirements for indoor or outdoor applications |
| **Loadcenter and Breaker Accessories** | |
| Branch circuit breaker:<br>Auxiliary components, Hold-down kits, Handle ties, Lockoffs, Lockdogs<br>Complete line of ground bar kits 5, 10, 14 and 21 circuit, some with additional #2/0 lugs; each terminal will accommodate: (3) #14–#10 Cu/Al or (1) #14–#4 Cu/Al<br>Main and sub-feed lugs 125, 150, 225 A—two- and three-pole<br>Shunt trips | Surge protection:<br>Single-phase plug-on surge protector, Single-phase bottle type surge protector, Three-phase bottle type surge protector, Single-phase whole home surge protector<br>Universal rainproof conduit hubs<br>Group One: 3/4, 1, 1-1/4, 1-1/2, 2 inches (19.1, 25.4, 31.8, 38.1, 50.8 mm)<br>Group Two: 2, 2-1/2, 3 inches (50.8, 63.5, 76.2 mm)<br>Adapter plate |
| **Bussing** | |
| Tin-plated aluminum as standard | Limited copper bus panels available |

## Product Description

Loadcenters are enclosures specifically designed to house the branch circuit breakers and wiring required to distribute power to individual circuits. They contain either a main breaker when used at the service entrance point or a main lug when used as a sub-panel to add circuits to existing service. The main breaker protects the main entire panel and can be used as a service disconnect. The branch breakers protect the wires leading to individual electrical loads such as fixtures and outlets.

## Features, Benefits and Functions

### *Loadcenter Construction*

Eaton's Type BR loadcenters have standard tin-plated aluminum bus with a limited availability of copper bus. The sum of the handle ratings connected to any stab is limited to 150 A maximum on the 100 and 125 A loadcenters, and 200 A on loadcenters with 150 A or higher main bus. NEMA Type 1 boxes or enclosures are manufactured from galvanized steel. Raintight boxes are manufactured from galvanized steel, then finished using an electrostatic powder coat, baked urethane paint process.

### *Neutrals*

Eaton Type CH loadcenters feature two types of neutrals:

#### *Insulated/Bondable Split Neutral*

Panels are supplied with split insulated neutrals with an insulated cross strap. For service entrance applications, the neutral must be bonded by using the bonding strap supplied with the panel. For non-service entrance (sub-panel) applications, the panel may be installed with the bonding strap not connected to the neutral. Separate ground bars must be used on non-service entrance panels.

#### *Insulated/Bondable Single Neutral*

Panels are supplied with a single insulated neutral. For service entrance applications, all that is required to bond the neutral is to loosen the bonding screw and the neutral screw directly beside it, insert the bonding strap into the neutral bar, and re-tighten both connections. The single neutral can be moved by the contractor to the other side of the panel, if desired. When used as a service entrance panel, unused neutral connections may be used for the termination of equipment grounds. For non-service entrance (sub-panel) applications, the panel may be installed with the bonding strap not connected to the neutral. Separate ground bars must be used on non-service entrance panels.

### *Grounds*

In service entrance applications where the neutral is bonded, unused neutral holes may be used for terminating ground conductors. In sub-feed panels, the neutral must be isolated (non-bonded), and ground wires must be terminated on a separate ground bar.

The insulated/bondable single/split neutral panels have sufficient terminations for both ground and neutral conductors. The insulated/bondable single split neutral panels are supplied with a separate factory-installed ground bar if the catalog number contains a "G." If not, a separate ground bar should be installed. Insulated/Bondable Single Neutral panels are supplied without a ground bar (unless otherwise noted), and ground bar kits if needed must be purchased separately.

### *Neutral and Ground Terminals*

The standard terminals on grounds and neutrals are rated to accept (3) #14–#10 Cu/Al or (1) #14–4, provided the cables terminated are of the same material. For larger cables, add-on neutral lugs may be ordered from the accessories on **Page V1-T1-66**.

**Note:** NEC allows only one current-carrying conductor per hole on neutrals unless otherwise noted.

### *Bottom Fed Loadcenters*

For single-phase 225 A and below loadcenters that are bottom fed, a standard panel can be rotated 180 degrees to allow straight-in wiring of power cables to the main terminals. Because the main circuit breaker handle operates horizontally, the orientation of the main circuit breaker handle is consistent with the requirements of NEC 2008 Article 240.81.

### *Gutter Splicing*

Loadcenters are not UL listed as wiring troughs. Therefore, gutter splicing of riser cables to tap off to the main device is not permitted. Refer to NEC 2008 Article 312.8.

### *Fire Rating*

Due to the numerous openings in both loadcenter boxes and trims, they should not be mounted in firewalls. There is no approved method for sealing the enclosures for this application.

### *Date Code*

The date of manufacture of each loadcenter is printed on the outside of the carton as well as inside the loadcenter. On the carton, the date code is printed on the end carton label. In the loadcenter, the date code is located on the small white label located on the right side wall (with the main device on top).

The date code is in the following format: F # # # &. The "F" is the numeric code for the Lincoln, IL plant, and the three numbers are the year and week of manufacturing, e.g., 023. The "!" sign at the end signifies the decade of the 2010. Therefore, the date code F023& would indicate that the product was manufactured in the 23rd week of 2010. The 1980s are represented by the "+" sign and the 1990s are represented by a "=" at the end of the code.

### *Surge Protectors*

Complete home surge protection is available in multiple options, including a factory-installed option that provides the highest level of surge protection in a residential design. See Tab 3 for more details.

### *Circuit Breaker Case Interrupting Capacity*

- 10 kAIC
- 22 kAIC
- 25 kAIC

### *Warranty Information*

- 10-year limited loadcenter warranty
- 10-year limited branch breaker warranty

1

## Type BR Loadcenter

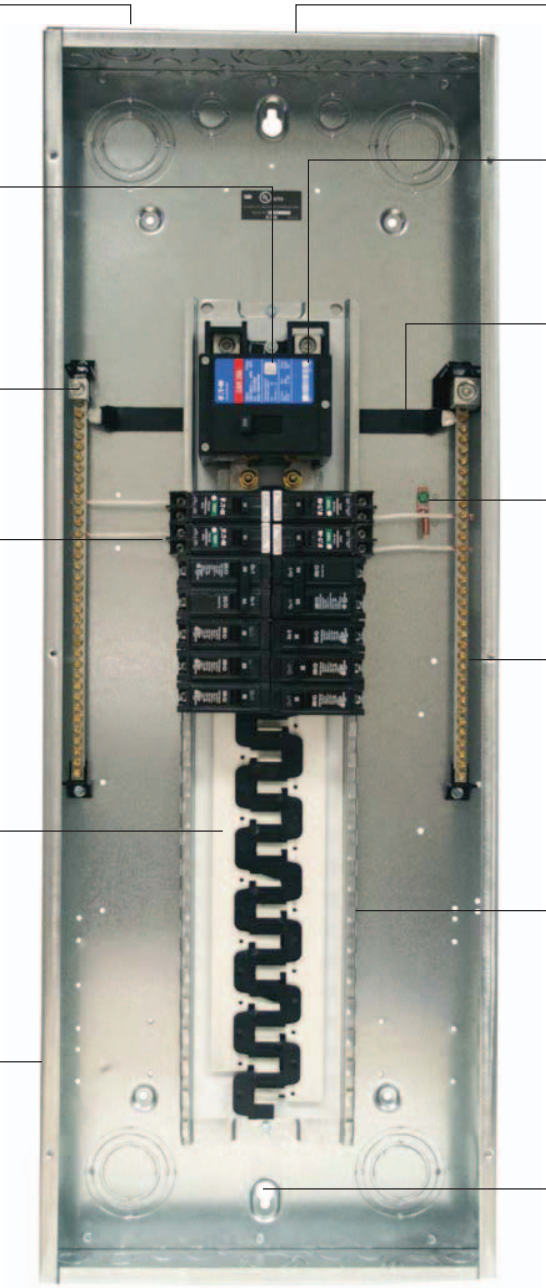

Extra 1.5 inch Knockout (38.1 mm)
- Larger knockout provides easier installation and time savings

Top or Bottom Feed
- Straight-in wiring saves labor and material
- One panel for either top or bottom applications

2/0 Lug
- Easily removable and can be installed in any location on the neutral bar

Type BR AFCI Breakers
- Compact design for easier wiring and improved wireway access
- Optional LED indicates one of six trip codes for circuit diagnostics
- Provides a clean gutter space

Standard Tin-Plated Aluminum Bus
- Excellent conductivity and corrosion resistance
- Copper bus options available for select catalog numbers

Drywall Marking on Enclosure
- Indicates proper mounting depth for flush applications

"Tangential" Center Knockout
- Easier installation for conduit applications

Commercial Grade Main Breaker
- 25 kAIC series rated main breaker for superior protection

Neutral Bus (Strap)
- Is easily removable for sub-panel applications

Bonding Z-Strap
- Provides easy field conversion for service entrance applications

Twin Neutral Bars
- Minimum 150% neutral capacity

Steel Backpan
- Provides solid and reliable breaker mounting—single piece design for stability and durability

Single Keyhole Mounting
- One keyhole at the top and bottom provides easier mounting and leveling

***Warranty***

10-year warranty on all Type BR loadcenters and circuit breakers.

## Standards and Certifications

***UL Listings***

All Eaton Type BR loadcenters are listed under UL File E52977 except the 2–8 circuit loadcenters, up through and including 125 A, which are listed under UL File E8741.

Listed

## Catalog Number Selection

### Single- and Three-Phase Through 600 A

**3 BR _ 30 42 B C 200 _ _**

**Phase**
- **Blank** = Single-phase ①
- **3** = Three-phase

**Eaton's Type BR Loadcenter**

**Factory Options**
- **SUR** = Factory integrated surge

**Number of 1-Inch (25.4 mm) Spaces**

**Maximum Number of Circuits**

**Main Device**
- **B** = Main breaker
- **L** = Main lug
- **N** = Convertible main
- **H** = Main breaker high AIC

**Bus**
- **Blank** = Aluminum bus ①
- **C** = Copper bus

**Amperes**

| | |
|---|---|
| **50** = 50 A | **200** = 200 A |
| **70** = 70 A | **225** = 225 A |
| **100** = 100 A | **300** = 300 A |
| **125** = 125 A | **400** = 400 A |
| **150** = 150 A | **600** = 600 A |

**Enclosure**
- **R** = NEMA Type 3R rainproof
- **S** = NEMA Type 1 indoor with surface trim
- **F** = NEMA Type 1 indoor with flush trim
- **Blank** = NEMA Type 1 indoor with combination trim ①
- **RIS** = Riser panel

**Construction**
- **Blank** = No feed thru lugs ①
- **F** = Feed-through lugs
- **G** = Ground bar
- **P** = Current design
- **NY** = NY City gutter space

***Note***

① No character space used.

1

## Product Selection

### *Single-Phase—Main Circuit Breaker Loadcenters—10/25 kAIC*

**BR4040B200**

### Single-Phase Three-Wire—120/240 Vac—Insulated/Bondable Split Neutral

| Main Breaker Type | Main Ampere Rating | Maximum Number 1-Inch (25.4 mm) Spaces | Maximum Number 1-Inch (25.4 mm) Circuits | Enclosure Type | Box Size | Wire Size Range Cu/Al 60 °C or 75 °C for Main Breaker | Loadcenter Catalog Number with Combination ① or NEMA Type 3R Cover |
|---|---|---|---|---|---|---|---|
| BR 10 kAIC | 100 | 8 | 16 | Indoor | B1 | #4–1/0 ② | **BR816B100** |
| | | 10 | 20 | Indoor | A1 | | **BR1020B100S11** |
| | | 10 | 20 | Indoor | A1 | | **BR1020B100F11** |
| | | 10 | 20 | Outdoor | B2R | | **BR1020B100RF** ③④ |
| | | 12 | 12 | Indoor | B2 | | **BR1212B100** |
| | | 12 | 20 | Indoor | B2 | | **BR1220B100** |
| | | 12 | 24 | Outdoor | B2R | | **BR1224B100R** ④ |
| | | 16 | 16 | Indoor | C1 | | **BR1616B100** |
| | | 16 | 20 | Indoor | C1 | | **BR1620B100** |
| | | 16 | 24 | Outdoor | C1R | | **BR1624B100R** ④ |
| | | 20 | 24 | Outdoor | C3R | | **BR2024B100R** ④ |
| | | 20 | 20 | Indoor | C2 | | **BR2020B100** |
| | | 16 | 24 | Indoor | C1 | | **BR1624B100** |
| | | 30 | 30 | Indoor | D1 | | **BR3030B100** |
| | 125 | 16 | 24 | Indoor | C1 | #4–2/0 | **BR1624B125** |
| | | 20 | 24 | Indoor | C1 | | **BR2024B125** |
| | | 20 | 24 | Outdoor | C3R | | **BR2024B125R** ④ |
| | | 30 | 30 | Indoor | D1 | | **BR3030B125** |
| BRH ⑤ 22 kAIC | 100 | 20 | 24 | Indoor | C2 | #4–1/0 | **BR2024H100** ⑤ |
| CSR ⑥ 25 kAIC | 150 | 8 | 16 | Outdoor | C3R | #2–300 kcmil | **BR816B150RF** ③④ |
| | | 16 | 30 | Indoor | C4 | | **BR1630B150** |
| | | 20 | 30 | Indoor | C4 | | **BR2030B150** |
| | | 20 | 30 | Outdoor | D1R | | **BR2030B150R** ④ |
| | | 20 | 40 | Indoor | D1 | | **BR2040B150** |
| | | 20 | 40 | Outdoor | D1R | | **BR2040B150R** ④ |
| | | 24 | 30 | Indoor | G1 | | **BR2430B150** |
| | | 30 | 30 | Outdoor | G1R | | **BR3030B150R** ④ |
| | | 30 | 30 | Indoor | G1 | | **BR3030B150** |
| | | 30 | 40 | Indoor | G1 | | **BR3040B150** |
| | 200 | 4 | 8 | Outdoor | 8R | #2–300 kcmil | **BR48B200RF** ③⑦⑧ |
| | | 8 | 16 | Outdoor | C3R | | **BR816B200RF** ③④ |
| | | 16 | 32 | Indoor | C4 | | **BR1632B200** |
| | | 20 | 40 | Outdoor | D1R | | **BR2040B200R** ④ |
| | | 20 | 40 | Indoor | D1 | | **BR2040B200** |
| | | 24 | 40 | Indoor | G1 | | **BR2440B200** |
| | | 30 | 40 | Outdoor | G1R | | **BR3040B200R** ④ |
| | | 30 | 40 | Indoor | G1 | | **BR3040B200** ⑨ |
| | | 40 | 40 | Outdoor | L1R | | **BR4040B200R** ④ |
| | | 40 | 40 | Indoor | L1 | | **BR4040B200** |
| | | 40 | 50 | Indoor | L1 | | **BR4050B200** |
| | | 60 | 120 | Indoor | L3 | | **BR60120B200** |
| | | 60 | 120 | Outdoor | L3R | | **BR60120B200R** |
| | 225 | 42 | 42 | Indoor | L2 | #1–250 kcmil | **BR4242B225** |
| | | 42 | 42 | Outdoor | L2R | | **BR4242B225R** ④ |

***Notes***

① Combination style covers may be used in surface or flush applications.
② Wire range size for BR1020B100SP is #6–#1 Cu/Al.
③ Includes through-feed lugs for both phase and neutral conductors.
④ Rainproof panels are furnished with hub closure plates. For rainproof hubs, refer to **Page V1-T1-66**.
⑤ 22 kAIC series combination rating is obtained when Types BD, BR, BQ, BQC and GFCB 10 kAIC branch breakers are used in series with Type BRH main breaker.
⑥ 25 kAIC series combination rating is obtained when Types BD, BR, BQ, BQC and GFCB 10 kAIC branch circuit breakers are used in series with Type CSR main breaker.
⑦ Supplied with adapter plate to use DS Group1 hubs on **Page V1-T1-66**. If 2.50-inch (63.5 mm) hub is needed, remove adapter and use ARP00007CH25 hub.
⑧ Neutral is bonded—suitable for service entrance only—cannot be converted for sub-feed application.
⑨ Add G to the end of the catalog number for factory-installed GBK2120 ground bar.

All main circuit breaker loadcenters are listed for use as service entrance equipment and are shipped with neutral bonding strap preattached. The maximum rating of the panel is the main circuit breaker rating when used as service entrance equipment. Ground bar kits priced separately. See **Page V1-T1-66**.

### *Main Circuit Breaker Loadcenters—10/22 kAIC*

**B4242DFN**

## Single-Phase Three-Wire—120/240 Vac—Insulated/Bondable Split Neutral

| Main Breaker Type | Main Ampere Rating | Maximum Number 1-Inch (25.4 mm) Spaces | Maximum Number 1-Inch (25.4 mm) Circuits | Enclosure Type | Box Size | Wire Size Range Cu/Al 60 °C or 75 °C for Main Breaker | Commercial Loadcenter Catalog Number ①②③ With Flush or NEMA Type 3R Cover | Commercial Loadcenter Catalog Number ①②③ With Surface Cover |
|---|---|---|---|---|---|---|---|---|
| DK ④ | 300 | 42 | 42 | Indoor | 24 | (2) #3/0–250 kcmil | **BR4242B300F** | **BR4242B300S** |
| | 400 | 42 | 42 | Indoor | 24 | (2) #3/0–250 kcmil | **BR4242B400F** | **BR4242B400S** |
| | | 42 | 42 | Outdoor | 47 | (2) #3/0–250 kcmil | **BR4242B400R** ⑤ | — |
| HLD ⑥ | 600 | 42 | 42 | Indoor | 24 | (2) #3/0–500 kcmil | — | **BR4242B600S** |

***Notes***

① Ground bar kits priced separately. See **Page V1-T1-66**.
② The maximum rating of the panel is the main circuit breaker rating when used as service entrance equipment.
③ Door lock and key included with loadcenter.
④ Type DK main circuit breaker is rated 65 kAIC at 240 Vac and allows a 22 kAIC series rating on the panel when Types BR, BD and BJ branch circuit breakers are used.
⑤ Rainproof panels are furnished with hub closure plates. For rainproof hubs, refer to **Page V1-T1-66**.
⑥ Type HLD main circuit breaker is rated 65 kAIC at 240 Vac. Type HLD circuit breaker **is not** series rated with Types BR, BD and BJ branch circuit breakers.

Box sizes **Pages V1-T1-67** through **V1-T1-70**.

Please contact the Lincoln Flex Center for any configurations not listed.

1

### *Single-Phase—Main Lug Loadcenters*

**Surface** **Outdoor**

**Flush** **Outdoor**

**Surface (No Door)**

**Flush (No Door)**

**Outdoor**

## Single-Phase Three-Wire—120/240 Vac—Insulated/Bondable Split Neutral

| Main Ampere Rating | Maximum Number 1-Inch (25.4 mm) Spaces | Circuits | Enclosure Type | Trim Type | Box Size | Wire Size Range Cu/Al 60 °C or 75 °C for Main Lugs | Loadcenter Catalog Number |
|---|---|---|---|---|---|---|---|
| 70 | 2 | 4 | Indoor | Surface (no door) | 5 | #8–#2 | **BR24L70SP** ①② |
| | 2 | 4 | Indoor | Surface (no door) | 5 | | **BR24L70SGP** ②③ |
| | 2 | 4 | Outdoor | — | 5R | | **BR24L70RP** ①②④ |
| | 2 | 4 | Indoor | Flush (no door) | 5 | | **BR24L70FP** ①② |
| | 2 | 4 | Indoor | Flush (no door) | 5 | | **BR24L70FGP** ②⑤ |
| 125 | 2 | 4 | Indoor | Surface (no door) | 6 | #14–1/0 | **BR24L125SP** ①② |
| | 2 | 4 | Outdoor | — | 6R | | **BR24L125RP** ①②④ |
| | 2 | 4 | Outdoor | — | 6R | | **BR24L125RSEP** ②⑦⑧ |
| | 2 | 4 | Outdoor | — | 6R | | **BR24L125RSE2P** ②⑥⑦ |
| | 2 | 4 | Indoor | Flush (no door) | 6 | | **BR24L125FP** ①② |
| | 4 | 8 | Indoor | Surface (no door) | 7 | #14–1/0 | **BR48L125SP** ①⑨ |
| | 4 | 8 | Indoor | Surface (no door) | 7 | | **BR48L125SGP** ③⑨ |
| | 4 | 8 | Outdoor | — | 7R | | **BR48L125RP** ①④⑨ |
| | 4 | 8 | Indoor | Flush (no door) | 7 | | **BR48L125FP** ①⑨ |
| | 4 | 8 | Indoor | Flush (with door) | 7 | | **BR48L125FDP** ①⑨ |
| | 4 | 8 | Indoor | Flush (no door) | 7 | | **BR48L125FGP** ③⑨ |
| | 6 | 12 | Indoor | Surface (no door) | 7 | #14–#1 | **BR612L125SP** ①⑩ |
| | 6 | 12 | Indoor | Surface (no door) | 7 | | **BR612L125SGP** ⑩⑪ |
| | 6 | 12 | Indoor | Surface (with door) | 7 | | **BR612L125SDP** ①⑩ |
| | 6 | 12 | Indoor | Surface (with door) | 7 | | **BR612L125SDGP** ⑩⑪ |
| | 6 | 12 | Outdoor | — | 7R | | **BR612L125RP** ①④⑩ |
| | 6 | 12 | Indoor | Flush (no door) | 7 | | **BR612L125FP** ①⑩ |
| | 6 | 12 | Indoor | Flush (no door) | 7 | | **BR612L125FGP** ⑤⑩⑪ |
| | 6 | 12 | Indoor | Flush (with door) | 7 | | **BR612L125FDP** ⑩ |
| | 6 | 12 | Indoor | Flush (with door) | 7 | | **BR612L125FDGP** ⑤⑩⑪ |
| | 8 | 16 | Indoor | Surface (no door) | 7 | #14–#1 | **BR816L125SP** ①⑩ |
| | 8 | 16 | Indoor | Surface (no door) | 7 | | **BR816L125SGP** ⑩⑫ |
| | 8 | 16 | Indoor | Surface (with door) | 7 | | **BR816L125SDP** ①⑩ |
| | 8 | 16 | Indoor | Surface (with door) | 7 | | **BR816L125SDGP** ⑩⑫ |
| | 8 | 16 | Outdoor | — | 7R | | **BR816L125RP** ①④⑩ |
| | 8 | 16 | Indoor | Flush (no door) | 7 | | **BR816L125FP** ①⑩ |
| | 8 | 16 | Indoor | Flush (no door) | 7 | | **BR816L125FGP** ⑤⑩⑫ |
| | 8 | 16 | Indoor | Flush (with door) | 7 | | **BR816L125FDP** ①⑩ |
| | 8 | 16 | Indoor | Flush (with door) | 7 | | **BR816L125FDGP** ⑤⑩⑫ |

***Notes***

① Ground bar kits priced separately. See **Page V1-T1-66**.
– For 2/4 circuit loadcenters, use GBK5 or GBK520 ground bar.
– For 4/8, 6/12 and 8/16 circuit loadcenters, use GBK10 ground bar.
– Ground bars mount to the left side wall of the enclosure for the 4/8, 6/12 and 8/16 circuit loadcenters.

② Suitable for use as service equipment when not more than two service disconnecting mains are provided or when not used as a lighting and appliance panelboard (see Article 408.34 of the NEC).

③ Ground bar GBK5 is installed.

④ Rainproof panels are furnished with hub closure plates. For rainproof hubs, refer to **Page V1-T1-66**.

⑤ CSA and UL approved.

⑥ Neutral/ground holes (6) #14–6 and (3) #14–2/0 AWG Cu/Al.

⑦ For use as service entrance applications only.

⑧ Neutral/ground holes (6) #14–6 and (3) #14–1/0 AWG Cu/Al.

⑨ Suitable for use as service equipment when not more than two service disconnecting mains are provided or when not more than six service disconnecting mains are provided and when not used as a lighting and appliance panelboard (see Article 408.34 of the NEC).

⑩ Suitable for use as service equipment when a main breaker is used or when not more than six service disconnecting mains are provided and when not used as a lighting and appliance panelboard (see Article 408.34 of the NEC).

⑪ Ground bar GBK10 is installed.

⑫ Ground bar GBK14 is installed.

Box sizes **Pages V1-T1-67** through **V1-T1-70**.

***Single-Phase—Main Lug Loadcenters***

## Single-Phase Three-Wire—120/240 Vac—Insulated/Bondable Split Neutral, continued

| | Main Ampere Rating | Maximum Number 1-Inch (25.4 mm) Spaces | Circuits | Enclosure Type | Box Size | Wire Size Range Cu/Al 60 °C or 75 °C for Main Lugs | Loadcenter Catalog Number with Combination or NEMA Type 3R Cover ① |
|---|---|---|---|---|---|---|---|
| **BR1224L125** | 125 | 12 | 12 | Indoor | B1 | #6–2/0 | **BR1212L125** ②③④⑤ |
| | | 12 | 24 | Indoor | B1 | | **BR1224L125** ②④⑤ |
| | | 12 | 24 | Indoor | B1 | | **BR1224L125G** ②④⑤ |
| | | 12 | 24 | Indoor | B1 | | **BR1224L125DG** ②④⑤⑥ |
| | | 12 | 24 | Outdoor | B1R | | **BR1224L125R** ②⑤⑦ |
| | | 16 | 16 | Indoor | B2 | | **BR1616L125** ②④⑤ |
| | | 16 | 24 | Indoor | B2 | | **BR1624L125** ②④ |
| | | 16 | 24 | Indoor | B2 | | **BR1624L125G** ②④ |
| | | 16 | 24 | Outdoor | B2R | | **BR1624L125R** ②⑦ |
| | | 20 | 20 | Indoor | C1 | | **BR2020L125** ②④⑤ |
| | | 20 | 24 | Indoor | C1 | | **BR2024L125** ②④ |
| | | 20 | 24 | Indoor | C1 | | **BR2024L125G** ②④⑧ |
| | | 20 | 24 | Outdoor | C1R | | **BR2024L125R** ②⑦ |
| | | 24 | 24 | Indoor | C2 | | **BR2424L125** ②④ |
| | | 24 | 24 | Indoor | C2 | | **BR2424L125G** ②④⑧ |
| | | 30 | 42 | Indoor | D1 | | **BR3042L125** ②④ |
| | 150 | 16 | 30 | Indoor | C2 | #1–300 kcmil | **BR1630L150** ④⑨ |
| | | 20 | 30 | Indoor | C2 | | **BR2030L150** ④⑨ |
| **BR1224L200** | 200 | 8 | 16 | Outdoor | B2R | #1–300 kcmil | **BR816L200RF** ⑤⑦⑩ |
| | | 12 | 24 | Indoor | B2 | | **BR1224L200** ④⑤⑨ |
| | | 12 | 24 | Outdoor | B2R | | **BR1224L200R** ⑤⑦⑨ |
| | | 20 | 40 | Indoor | C2 | | **BR2040L200** ④⑨ |
| | | 20 | 40 | Indoor | C2 | | **BR2040L200G** ④⑧⑨ |
| | | 20 | 40 | Outdoor | C3R | | **BR2040L200R** ⑦⑨ |
| | | 24 | 40 | Indoor | C4 | | **BR2440L200** ④⑨ |
| | | 30 | 40 | Indoor | D1 | | **BR3040L200** ④⑨ |
| | | 30 | 40 | Indoor | D1 | | **BR3040L200G** ④⑧⑨ |
| | | 30 | 40 | Outdoor | D1R | | **BR3040L200R** ⑦⑨ |
| | | 40 | 40 | Indoor | G1 | | **BR4040L200** ④⑨ |
| | | 40 | 40 | Indoor | G1 | | **BR4040L200G** ④⑨ |
| | | 40 | 40 | Outdoor | G1R | | **BR4040L200R** ⑦⑨ |
| | | 60 | 120 | Indoor | L3 | | **BR60120L200** ⑪ |
| | 225 | 42 | 42 | Indoor | L1 | #1–300 kcmil | **BR4242L225** ④ |
| | | 42 | 42 | Outdoor | L1R | | **BR4242L225R** ⑦ |

***Notes***

① Ground bar kits priced separately unless otherwise noted. See **Page V1-T1-66**.
② Has notch for BREQS125 hold-down kit.
③ Single, movable neutral is provided.
④ Combination cover style.
⑤ Suitable for use as service equipment when not more than six main disconnecting means are provided and when not used as a lighting and appliance panelboard (see Article 408.34 of the NEC).
⑥ Ground bars GBK5 and GBK520 installed.
⑦ Rainproof panels are furnished with hub closure plates. For rainproof hubs, refer to **Page V1-T1-66**.
⑧ Ground bar GBK1220 installed.
⑨ Has notch for BRHDK125 hold-down kit.
⑩ Includes through-feed lugs for both phase and neutral conductors.
⑪ Includes main lugs. Loadcenters can convert to main breaker using kit.

1

### *Single-Phase—Main Lug Loadcenters—400 and 600 A*

**4242DFN**

## Single-Phase Three-Wire—120/240 Vac—Insulated/Bondable Split Neutral

| Main Ampere Rating | Maximum Number 1-Inch (25.4 mm) Spaces | Circuits | Enclosure Type | Box Size | Wire Size Range Cu/Al 60 °C or 75 °C for Main Lugs | Commercial Loadcenter Catalog Number ①②③ With Flush or NEMA Type 3R Cover | With Surface Cover |
|---|---|---|---|---|---|---|---|
| 400 | 12 | 24 | Outdoor | 42 | (2) #3/0–400 kcmil | **BR1224L400R** ④⑤ | — |
| | 42 | 42 | Indoor | 22 | | **BR4242L400F** | **BR4242L400S** |
| | 42 | 42 | Outdoor | 46 | | **BR4242L400R** ④ | — |
| 600 | 42 | 42 | Indoor | 22 | (2) #2–500 kcmil | — | **BR4242L600S** |

***Notes***

① Ground bar kits priced separately unless otherwise noted. See **Page V1-T1-66**.

② Has notch for BRHDK125 hold-down kit.

③ Ground bar GBK8 installed.

④ Rainproof panels are furnished with hub closure plates. For rainproof hubs, refer to **Page V1-T1-66**.

⑤ Suitable for use as service equipment when not more than six main disconnecting means are provided and when not used as a lighting and appliance panelboard (see Article 408.34 of the NEC).

***Convertible Loadcenters MCB or MLO—Base Units and Main Devices 10/22/25 kAIC, Complete Assembly Consists of: Loadcenter and Either Main Breaker Kit or Main Lug Kit***

**Note:** Interrupting rating depends on main circuit breaker selected.

**BR3040N200**

## Base Units—Single-Phase Three-Wire—120/240 Vac—Insulated/Bondable Split Neutral (Unless Otherwise Noted)

| Main Ampere Rating ① | Maximum Number 1-Inch (25.4 mm) Spaces | Circuits | Enclosure Type | Box Size | Wire Size Range Cu/Al 60 °C or 75 °C for Main | Loadcenter Catalog Number With Combination or NEMA Type 3R Cover ②③ |
|---|---|---|---|---|---|---|
| 125 ④ | 12 | 24 | Indoor | B2 | See main breaker and main lug kit tables **Page V1-T1-54**. | **BR1224N125** ⑤⑥ |
| | 12 | 24 | Outdoor | B2R | | **BR1224N125R** ⑤⑥⑦ |
| | 16 | 24 | Indoor | C1 | | **BR1624N125** ⑤ |
| | 16 | 24 | Outdoor | C1R | | **BR1624N125R** ⑤⑦ |
| | 20 | 24 | Indoor | C2 | | **BR2024N125** ⑤ |
| | 20 | 24 | Outdoor | C3R | | **BR2024N125R** ⑤⑦ |
| 200 ⑧ | 8 | 16 | Outdoor | C3R | | **BR816N200RF** ⑦⑨⑩⑪ |
| | 12 | 24 | Indoor | C4 | | **BR1224N200** ⑩ |
| | 12 | 24 | Outdoor | C3R | | **BR1224N200R** ⑦⑩ |
| | 16 | 32 | Indoor | C4 | | **BR1632N200** ⑩ |
| | 20 | 40 | Indoor | D1 | | **BR2040N200** ⑩ |
| | 20 | 40 | Indoor | D1 | | **BR2040N200G** ⑫ |
| | 20 | 40 | Outdoor | D1R | | **BR2040N200R** ⑦⑩ |
| | 20 | 40 | Outdoor | D1R | | **BR2040N200RG** ⑫ |
| | 24 | 40 | Indoor | G1 | | **BR2440N200** ⑦⑩ |
| | 30 | 40 | Indoor | G1 | | **BR3040N200** ⑩ |
| | 30 | 40 | Indoor | G1 | | **BR3040N200G** ⑫ |
| | 30 | 40 | Outdoor | G1R | | **BR3040N200R** ⑦⑩ |
| | 30 | 40 | Outdoor | G1R | | **BR3040N200RG** ⑫ |
| | 40 | 40 | Indoor | L1 | | **BR4040N200** ⑩ |
| | 40 | 40 | Indoor | L1 | | **BR4040N200G** ⑫ |
| | 40 | 40 | Outdoor | L1R | | **BR4040N200R** ⑦⑩ |
| | 40 | 40 | Outdoor | L1R | | **BR4040N200RG** ⑫ |
| | 40 | 50 | Indoor | L1 | | **BR4050N200** |
| | 40 | 50 | Outdoor | L1R | | **BR4050N200R** |

***Notes***

① The maximum rating of the loadcenter is the main circuit breaker rating when used as service entrance equipment.
② 100, 125 and 200 A convertible base unit catalog numbers include interior, box and cover only. Main devices and accessories must be ordered separately for field installation. All convertible base units are listed as suitable for use as service entrance equipment when used per Article 384 of the NEC.
③ Ground bar kits priced separately except as noted, refer to **Page V1-T1-66**.
④ For main breaker, use Type BR. For main lug use Type BRSF.
⑤ BREQS125 hold-down screw comes with loadcenter for back-fed Types BR and BRH main circuit breakers.
⑥ Convertible to maximum of 100 A main circuit breaker and 125 A main lug.
⑦ Rainproof loadcenters are furnished with hub closure plates. For rainproof hubs, refer to **Page V1-T1-66**.
⑧ For main breaker, use Type BW or CSR. For main lug, use Type BRL.
⑨ Includes through-feed lugs for both phase and neutral conductors.
⑩ No hold-down provisions for back-fed Types BR and BRH main circuit breakers.
⑪ Insulated/bondable single neutral.
⑫ Includes GBK2120 ground bar.

***Convertible Loadcenters MCB or MLO—Base Units and Main Devices 10/22/25 kAIC, Complete Assembly Consists of: Loadcenter and Either Main Breaker Kit or Main Lug Kit***

**Note:** Interrupting rating depends on main circuit breaker selected.

**BW2200**

### Main Devices—Two- and Three-Pole Main Circuit Breakers—120/240 Vac or 208Y/120 Vac or 240 Vac

| Ampere Rating | Wire Size Range Cu/Al 60 °C or 75 °C for Main Breaker | 10 kAIC Catalog Number | 22/25 kAIC Catalog Number ① |
|---|---|---|---|
| **Two-Pole** | | | |
| 100 | #4–1/0 | **BR2100** | **BRH2100** |
| 110 | #4–1/0 | **BR2110** | **BRH2110** |
| 125 | #4–2/0 | **BR2125** | **BRH2125** |
| 125 | #2–300 kcmil | **BW2125** | **CSR2125N** |
| 150 | #2–300 kcmil | **BW2150** | **CSR2150N** |
| 175 | #2–300 kcmil | **BW2175** | **CSR2175N** |
| 200 | #2–300 kcmil | **BW2200** | **CSR2200N** |
| **Three-Pole** | | | |
| 100 | #1 | **BR3100** | **BRH3100** |

**BRL200**

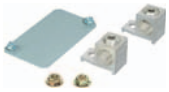

### Main Devices—Two- and Three-Pole Main Lug Kits—120/240 Vac or 208Y/120 Vac or 240 Vac

| Ampere Rating | Wire Size Range Cu/Al 60 °C or 75 °C for Main Lugs | Catalog Number |
|---|---|---|
| **Two-Pole** | | |
| 125 | #6–2/0 | **BRSF125** |
| 150 | #1–300 kcmil | **BRL200** |
| 175 | #1–300 kcmil | **BRL200** |
| 200 | #1–300 kcmil | **BRL200** |
| **Three-Pole** | | |
| 150 | #6–3/0 | **3BRSF150** |

***Main Circuit Breaker with Accessory***

Example: BW22005R01 (Put description with catalog number on order. See **Page V1-T1-87**.)

***Main Circuit Breaker Loadcenters—Copper Bus 10/22/25 kAIC***

**BR3030BC100**

### Main Circuit Breaker Loadcenters—With Copper Bus—Single-Phase Three-Wire—120/240 Vac—Insulated/Bondable Split Neutral

| Main Breaker Type | Main Ampere Rating | Maximum Number 1-Inch (25.4 mm) Spaces | Maximum Number 1-Inch (25.4 mm) Circuits | Enclosure Type | Box Size | Wire Size Range Cu/Al 60 °C or 75 °C for Main Breaker | Loadcenter Catalog Number with Combination Cover ②③ |
|---|---|---|---|---|---|---|---|
| BR 10 kAIC | 100 | 20 | 20 | Indoor | C2 | #4–1/0 | **BR2020BC100** |
| | | 30 | 30 | Indoor | D1 | #4–1/0 | **BR3030BC100** |
| BRH 22 kAIC ④ | 100 | 30 | 30 | Indoor | D1 | #4–1/0 | **BR3030HC100** |
| CSR 25 kAIC | 150 | 30 | 30 | Indoor | G1 | #2–300 kcmil | **BR3030BC150** |
| | 200 | 20 | 40 | Indoor | D1 | #2–300 kcmil | **BR2040BC200** |
| | | 30 | 40 | Indoor | G1 | #2–300 kcmil | **BR3040BC200** |
| | | 40 | 40 | Indoor | L1 | #2–300 kcmil | **BR4040BC200** |

***Main Lug Only Loadcenters—Copper Bus***

**BR816LC125FDP**

### Single-Phase Three-Wire—120/240 Vac—Insulated/Bondable Single Neutral with Copper Bus

| Main Ampere Rating | Maximum Number 1-Inch (25.4 mm) Spaces | Maximum Number 1-Inch (25.4 mm) Circuits | Enclosure Type | Trim Type | Box Size | Wire Size Range Cu/Al 60 °C or 75 °C for Main Lugs | Loadcenter Catalog Number |
|---|---|---|---|---|---|---|---|
| 125 | 8 | 16 | Indoor | Surface (with door) | 7 | #14–1 | **BR816LC125SDP** |
| | 8 | 16 | Indoor | Flush (with door) | 7 | | **BR816LC125FDP** |

***Notes***

① Series combination rating with Types BD, BR, BQ, BQC and GFCB is 22 kAIC with BRH main and 25 kAIC with CSR main.

② All main circuit breaker loadcenters are listed for use as service entrance equipment and are shipped with neutral bonding strap preattached. The maximum rating of the panel is the main circuit breaker rating when used as service entrance equipment.

③ Ground bar kits priced separately. See **Page V1-T1-66**.

④ 22 kAIC series combination rating is obtained when Types BD, BR, BQ, BQC and GFCB 10 kAIC branch breakers are used in series with Type BRH main breaker.

Box sizes **Pages V1-T1-67** through **V1-T1-70**.

### *Convertible Loadcenters—Copper Bus 10/22/25 kAIC*

**BR3040NC200**

## Convertible—Single-Phase, Three-Wire—120/240 Vac—Insulated/Bondable Split Neutral

| Main Ampere Rating | Maximum Number 1-Inch (25.4 mm) Spaces | Circuits | Enclosure Type | Box Size | Wire Size Range Cu/Al 60 °C or 75 °C for Main | Loadcenter Catalog Number (With Combination or NEMA Type 3R Cover) ①②③ |
|---|---|---|---|---|---|---|
| 125 10/22 kAIC ④⑤ | 12 | 24 | Indoor | B2 | See main breaker and main lug kit tables on **Page V1-T1-54**. | **BR1224NC125** ⑥⑦ |
| | 12 | 24 | Outdoor | B2R | | **BR1224NC125R** ⑥⑦⑧ |
| | 20 | 24 | Indoor | C2 | | **BR2024NC125** ⑦ |
| | 20 | 24 | Outdoor | C3R | | **BR2024NC125R** ⑦⑧ |
| 200 10/25 kAIC ④⑨ | 20 | 40 | Indoor | D1 | | **BR2040NC200** |
| | 20 | 40 | Outdoor | D1R | | **BR2040NC200R** ⑧ |
| | 30 | 40 | Indoor | G1 | | **BR3040NC200** |
| | 30 | 40 | Outdoor | G1R | | **BR3040NC200R** ⑧ |
| | 40 | 40 | Indoor | L1 | | **BR4040NC200** |
| | 40 | 40 | Outdoor | L1R | | **BR4040NC200R** ⑧ |

***Notes***

① 100, 125 and 200 A convertible base unit catalog numbers include interior, box and cover only. Main devices and accessories must be ordered separately for field installation. All convertible base units are listed as suitable for use as service entrance equipment when used per Article 384 of the NEC.

② Ground bar kits priced separately, refer to **Page V1-T1-66**.

③ All main circuit breaker loadcenters are listed for use as service entrance equipment and are shipped with a neutral bonding strap preattached. The maximum main rating of the loadcenter is the main breaker rating when used as service entrance equipment.

④ Interrupting rating depends on main circuit breaker selected. See **Page V1-T1-66** for mains.

⑤ For main breaker, use Type BW or CSR. For main lug, use Type BRL.

⑥ Rainproof loadcenters are furnished with hub closure plates. For rainproof hubs, refer to **Page V1-T1-66**.

⑦ Hold-down screw BREQS125 comes with loadcenter for back-fed Types BR and BRH main circuit breakers.

⑧ For main breaker, use Type BR. For main lug, use Type BRSF.

⑨ Suitable for use as service equipment when not more than six main disconnecting means are provided and when not used as a lighting and appliance panelboard. (see Article 408.34 of the NEC).

### *Three-Phase—Type BR Main Circuit Breaker Loadcenters*

#### Three-Phase, Four-Wire—Main Lug Loadcenters—Copper Bus—208Y/120 Vac or 240 Vac, Insulated/Bondable Split Neutral

| Main Ampere Rating | Maximum Number 1-Inch (25.4 mm) Spaces | Circuits | Enclosure Type | Box Size | Wire Size Range Cu/Al 60 °C or 75 °C for Main | Loadcenter Catalog Number (With Combination or NEMA Type 3R Cover) |
|---|---|---|---|---|---|---|
| 125 | 12 | 24 | Indoor | C1 | #6–3/0 | **3BR1224LC125** |
| 125 | 12 | 24 | Outdoor | C1R | #6–3/0 | **3BR1224LC125R** |
| 150 | 24 | 42 | Indoor | D1 | #4–300 kcmil | **3BR2442LC150** |
| 150 | 24 | 42 | Outdoor | D1R | #4–300 kcmil | **3BR2442LC150R** |
| 200 | 12 | 24 | Indoor | C4 | #4–300 kcmil | **3BR1224LC200** |
| 200 | 12 | 24 | Outdoor | C3R | #4–300 kcmil | **3BR1224LC200R** |
| 200 | 30 | 42 | Indoor | G1 | #4–300 kcmil | **3BR3042LC200** |
| 200 | 30 | 42 | Outdoor | G1R | #4–300 kcmil | **3BR3042LC200R** |
| 200 | 42 | 42 | Indoor | L1 | #4–300 kcmil | **3BR4242LC200** |
| 200 | 42 | 42 | Outdoor | L1R | #4–300 kcmil | **3BR4242LC200R** |
| 225 | 30 | 42 | Indoor | L1 | #4–300 kcmil | **3BR3042LC225** |
| 225 | 30 | 42 | Outdoor | L1R | #4–300 kcmil | **3BR3042LC225R** |
| 400 | 42 | 42 | Indoor | 24 | (2) 3/0–250 kcmil | **3BR4242LC400S** |
| | 42 | 42 | Outdoor | 47 | | **3BR4242BC400R** |
| 600 | 42 | 42 | Indoor | 24 | (2) 3/0–500 kcmil | **3BR4242LC600S** |

#### Three-Phase, Four-Wire—Main Circuit Breaker Loadcenters—Copper Bus—208Y/120 Vac or 240 Vac, Insulated/Bondable Split Neutral

| Main Breaker Type | Main Ampere Rating | Maximum Number 1-Inch (25.4 mm) Spaces | Circuits | Enclosure Type | Box Size | Wire Size Range Cu/Al 60 °C or 75 °C for Main Breaker | Loadcenter Catalog Number (With Combination or NEMA Type 3R Cover) |
|---|---|---|---|---|---|---|---|
| BR 10 kAIC | 100 | 12 | 24 | Indoor | C1 | #14–1/0 | **3BR1224BC100** |
| | 100 | 12 | 24 | Outdoor | C1R | #14–1/0 | **3BR1224BC100R** |
| CC 10 kAIC | 150 | 30 | 42 | Indoor | L1 | #6–4/0 | **3BR3042BC150** |
| | 150 | 30 | 42 | Outdoor | L1R | #6–4/0 | **3BR3042BC150R** |
| | 200 | 42 | 42 | Indoor | L2 | 2/0–300 kcmil | **3BR4242BC200** |
| | 200 | 42 | 42 | Outdoor | L2R | 2/0–300 kcmil | **3BR4242BC200R** |
| | 225 | 42 | 42 | Indoor | L2 | 2/0–300 kcmil | **3BR4242BC225** |
| | 225 | 42 | 42 | Outdoor | L2R | 2/0–300 kcmil | **3BR4242BC225R** |
| DK 22 kAIC | 400 | 42 | 42 | Indoor | 24 | (2) 3/0–250 kcmil | **3BR4242BC400S** |
| | | 42 | 42 | Outdoor | 47 | | **3BR4242BC400R** |
| HLD 10 kAIC | 600 | 42 | 42 | Indoor | 24 | (2) 3/0–500 kcmil | **3BR4242BC600S** |

**3BR4242B200**

#### Three-Phase, Four-Wire—Main Circuit Breaker Loadcenters—Aluminum Bus—208Y/120 Vac or 240 Vac Insulated/Bondable Split Neutral

| Main Breaker Type | Main Ampere Rating | Maximum Number 1-Inch (25.4 mm) Spaces | Circuits | Enclosure Type | Box Size | Wire Size Range Cu/Al 60 °C or 75 °C for Main Breaker | Loadcenter Catalog Number ①② (With Combination or NEMA Type 3R Cover) |
|---|---|---|---|---|---|---|---|
| BR 10 kAIC | 100 | 12 | 24 | Indoor | C1 | #14–1/0 | **3BR1224B100** |
| | | 12 | 24 | Outdoor | C1R | | **3BR1224B100R** ③ |
| CC 10 kAIC | 125 | 30 | 42 | Indoor | L1 | #6–4/0 | **3BR3042B125** |
| | 150 | 30 | 42 | Indoor | L1 | #6–4/0 | **3BR3042B150** |
| | | 30 | 42 | Outdoor | L1R | | **3BR3042B150R** ③ |
| | 200 | 30 | 42 | Indoor | L1 | #1–250 kcmil | **3BR3042B200** |
| | | 30 | 42 | Outdoor | L1R | | **3BR3042B200R** ③ |
| | | 42 | 42 | Indoor | L2 | | **3BR4242B200** |
| | | 42 | 42 | Outdoor | L2R | | **3BR4242B200R** ③ |
| CHH 100 kAIC | 200 | 42 | 42 | Indoor | L2 | 2/0–300 kcmil | **3BR4242H200** ⑥ |
| CC 10 kAIC | 225 | 42 | 42 | Indoor | L2 | 2/0–300 kcmil | **3BR4242B225** |
| | | 42 | 42 | Outdoor | L2R | | **3BR4242B225R** ③ |
| DK ④ 22 kAIC | 400 | 42 | 42 | Indoor | 24 | (2) #3/0–250 kcmil | **3BR4242B400S** ⑦ |
| | | 42 | 42 | Indoor | 24 | | **3BR4242B400F** |
| | | 42 | 42 | Outdoor | 47 | | **3BR4242B400R** ③ |
| LD ⑤ | 600 | 42 | 42 | Indoor | 24 | (2) #3/0–500 kcmil | **3BR4242B600F** |

***Notes***

① All main circuit breaker loadcenters are listed for use as service entrance equipment and are shipped with a neutral bonding strap pre-attached (commercial loadcenters do not have a pre-attached bonding strip). The maximum main rating of the panel is the main circuit breaker rating when used as service entrance equipment.

② Ground bar kits priced separately. See **Page V1-T1-66**.

③ Rainproof loadcenters are furnished with hub closure plates. For rainproof hubs, refer to **Page V1-T1-66**.

④ Type DK main circuit breaker is rated 65 kAIC at 240 Vac and allows a 22 kAIC series rating on the loadcenter when Types BR, BD and BJ branch circuit breakers are used.

⑤ The LD main circuit breaker is rated 65 kAIC at 240 Vac. Type LD circuit breaker **is not** series rated with Types BR, BD and BJ branch circuit breakers.

⑥ Includes CHH 100 kAIC rated MCB. 100 kAIC series rating combination is obtained when types BD, BR, BQ, BQC and GFGB branch breakers are used with CHH main.

⑦ With surface cover.

3BR1224L125

## Three-Phase, Four-Wire—Main Lug Loadcenters—Aluminum Bus—208Y/120 Vac or 240 Vac, Insulated/Bondable (Unless Otherwise Noted)

| Main Ampere Rating | Maximum Number 1-Inch (25.4 mm) Spaces | Circuits | Enclosure Type | Box Size | Wire Size Range Cu/Al 60 °C or 75 °C for Main Lugs | Loadcenter Catalog Number ① (With Combination or NEMA Type 3R Cover) |
|---|---|---|---|---|---|---|
| 100 | 3 | 3 | Indoor | 9 | #6–1/0 | **3BR3L100S** ②③ |
| | 3 | 3 | Outdoor | 9R | | **3BR3L100R** ③④ |
| 125 | 12 | 24 | Indoor | C1 | #6–3/0 | **3BR1224L125** ⑤⑥ |
| | 12 | 24 | Outdoor | C1R | | **3BR1224L125R** ④⑤⑥ |
| 150 | 18 | 36 | Indoor | C2 | #6–4/0 | **3BR1836L150** |
| | 18 | 36 | Outdoor | C3R | | **3BR1836L150R** |
| | 24 | 42 | Indoor | D1 | #4–300 kcmil | **3BR2442L150** |
| | 24 | 42 | Outdoor | D1R | | **3BR2442L150R** ④ |
| 200 | 12 | 24 | Indoor | C4 | #4–300 kcmil | **3BR1224L200** ⑥ |
| | 12 | 24 | Outdoor | C3R | | **3BR1224L200R** ④⑥ |
| | 18 | 36 | Indoor | C4 | #4–300 kcmil | **3BR1836L200** |
| | 18 | 36 | Outdoor | C3R | | **3BR1836L200R** |
| | 30 | 42 | Indoor | G1 | #4–300 kcmil | **3BR3042L200** |
| | 30 | 42 | Outdoor | G1R | | **3BR3042L200R** ④ |
| | 42 | 42 | Indoor | L1 | #4–300 kcmil | **3BR4242L200** |
| | 42 | 42 | Outdoor | L1R | | **3BR4242L200R** ④ |
| 225 | 42 | 42 | Indoor | L1 | #4–300 kcmil | **3BR4242L225** |
| | 42 | 42 | Outdoor | L1R | | **3BR4242L225R** ④ |

3BR4242L400F

## Three-Phase, Four-Wire—Main Lug Loadcenters—Aluminum Bus—208Y/120 Vac or 240 Vac, Insulated/Bondable Split Neutral

| Main Ampere Rating | Maximum Number 1-Inch (25.4 mm) Spaces | Circuits | Enclosure Type | Box Size | Wire Size Range Cu/Al 60 °C or 75 °C for Main Lugs | Commercial Loadcenter Catalog Number ⑦ With Flush or NEMA Type 3R Cover | With Surface Cover |
|---|---|---|---|---|---|---|---|
| 400 | 42 | 42 | Indoor | 22 | (1) 250–750 kcmil or (2) #3/0–250 kcmil | **3BR4242L400F** | **3BR4242L400S** |
| | 42 | 42 | Outdoor | 46 | | **3BR4242L400R** ④ | — |
| 600 | 42 | 42 | Indoor | 22 | (2) #2–500 kcmil | — | **3BR4242L600S** |

***Notes***

① Ground bar kits priced separately. See **Page V1-T1-66**.
② Surface cover only.
③ Insulated/bondable single neutral.
④ Rainproof loadcenters are furnished with hub closure plates. For rainproof hubs, refer to **Page V1-T1-66**.
⑤ Has notch for BREQS125 hold-down kit.
⑥ Suitable for use as service equipment when not more than six main disconnecting means are provided and when not used as a lighting and appliance panelboard (see Article 408.34 of the NEC).
⑦ Door lock and key included with loadcenter.

Box sizes **Pages V1-T1-67** through **V1-T1-70**.

3BR3030N100

3BR4242N225NY

## Three-Phase, Four-Wire—Convertible Loadcenters—Aluminum Bus—208Y/120 Vac or 240 Vac, Insulated/Bondable Split Neutral

| Main Ampere Rating ① | Maximum Number 1-Inch (25.4 mm) Spaces | Circuits | Enclosure Type | Box Size | Wire Size Range Cu/Al 60 °C or 75 °C for Main | Loadcenter Catalog Number ②③ (With Combination or NEMA Type 3R Cover) |
|---|---|---|---|---|---|---|
| 100 ④ | 30 | 30 | Indoor | D1 | See main breaker and main lug kit tables below. | **3BR3030N100** ⑤ |
| | 30 | 30 | Outdoor | D1R | | **3BR3030N100R** ⑤⑥ |
| 125 ④ | 12 | 24 | Indoor | C1 | | **3BR1224N125** ⑤⑥⑦ |
| | 12 | 24 | Outdoor | C1R | | **3BR1224N125R** ⑤⑥⑦⑧ |
| 200 | 30 | 42 | Indoor | L1 | | **3BR3042N200** |
| 225 | 42 | 42 | Indoor | L2 | | **3BR4242N225** |
| | 42 | 42 | Indoor | B | | **3BR4242B225NY** ⑨ |

## Three-Phase Main Breaker Kits—10 kAIC

| Ampere Rating | Wire Size Range Cu/Al 60 °C or 75 °C | Catalog Number |
|---|---|---|
| 100 | #6–4/0 | **CC3100N** |
| 125 | #6–4/0 | **CC3125N** |
| 150 | #6–4/0 | **CC3150N** |
| 175 | #2/0–300 kcmil | **CC3175N** |
| 200 | #2/0–300 kcmil | **CC3200N** |
| 225 | #2/0–300 kcmil | **CC3225N** |

## Three-Phase Main Lugs Kit for Convertible Loadcenters

| Ampere Rating | Wire Size Range Cu/Al 60 °C or 75 °C | Catalog Number |
|---|---|---|
| 225 | #1–300 kcmil | **3BRL225** |
| 225 | #1–300 kcmil | **3BRS225** ⑩ |

***Notes***

① The maximum rating of the loadcenter is the main circuit breaker rating when used as service entrance equipment.

② 100, 125 and 200 A convertible base unit catalog numbers include interior, box and cover only. Main devices and accessories must be ordered separately for field installation.
All convertible base units are listed as suitable for use as service entrance equipment when used per Article 384 of the NEC.

③ Ground bar kits priced separately. See **Page V1-T1-66**.

④ For main breaker, use Type BR. For main lug, use Type BRSF.

⑤ BREQS125 hold-down screw comes with loadcenter for back-fed Types BR and BRH main circuit breakers.

⑥ Rainproof loadcenters are furnished with hub closure plates. For rainproof hubs, refer to **Page V1-T1-66**.

⑦ Convertible to maximum of 100 A main circuit breaker and 125 A main lug.

⑧ Suitable for use as service equipment when not more than six main disconnecting means are provided and when not used as a lighting and appliance panelboard
(see Article 408.34 of the NEC).

⑨ Order 3BR42FTNY or 3BR42STNY cover separately.

⑩ For subfeed.

Box sizes **Pages V1-T1-67** through **V1-T1-70**.

BR Quick Connect Neutral Loadcenters

## Contents—BR Specialty Products


| *Description* | *Page* |
|---|---|
| Overview | V1-T1-42 |
| BR Specialty Products | |
| BR Quick Connect Neutral Loadcenters | |
| Spa Panels | V1-T1-58 |
| Riser Panel | V1-T1-59 |
| Type BR Renovation Loadcenter | V1-T1-60 |
| Type BR Mechanical Interlock Kits | V1-T1-62 |
| Type BR Retrofit Interior Kits | V1-T1-73 |
| BR Circuit Breakers | V1-T1-76 |


## BR Specialty Products

## BR Quick Connect Neutral Loadcenters

### Product Description

The Type BR Quick Connect Neutral loadcenters coupled with Type BR Quick Connect Neutral electronic breakers provide a clean, quick connection for an installer looking to save time while providing a professional look.

### Features and Benefits

- Full-length neutral bars provide over 300% neutral capacity while enhancing installation flexibility for the installer
- Backed-out neutral screws allow an installer to make a quick connection when terminating neutral and ground wires
- Extended circuits (30/60, 40/80) provide maximum flexibility to a contractor on every space possible
- Standard LED diagnostics on AFCI and AF/GF breakers provides installers best-in-class troubleshooting technology
- Cut-to-length neutral wires provides a clean, professional look versus traditional pigtail circuit breakers
- Solid-tip, stranded neutral wires provide a quick connection to the full length neutral bar

## Product Selection

### BR Quick Connect Neutral Loadcenters ①

| Main Device | Ampere Rating | Spaces | Circuits ② | Incoming Lug Size | Enclosure Type ③ | Box Size | Ground Bar | Number of Neutral Terminations | Catalog Number |
|---|---|---|---|---|---|---|---|---|---|
| BR 10 kAIC | 100 | 30 | 60 | #4–1/0 | Indoor | D1 | ④ | 96 | **BR3060BQN100** |
| CSR 25 kAIC | 150 | 30 | 60 | #2–300 kcmil | Indoor | G1 | ④ | 102 | **BR3060BQN150** |
| CSR 25 kAIC | 200 | 30 | 60 | #2–300 kcmil | Indoor | G1 | ④ | 102 | **BR3060BQN200** |
| CSR 25 kAIC | 200 | 40 | 80 | #2–300 kcmil | Indoor | L1 | ④ | 128 | **BR4080BQN200** |
| CSR 25 kAIC | 200 | 30 | 60 | #2–300 kcmil | Outdoor | L1R | ④ | 94 | **BR3060BQN200R** |
| CSR 25 kAIC | 200 | 40 | 80 | #2–300 kcmil | Outdoor | G1R | ④ | 128 | **BR4080BQN200R** |
| Main lug only | 125 | 24 | 48 | #6–2/0 | Indoor | C2 | GBK14 | 80 | **BR2448LQN125G** |
| Main lug only | 125 | 30 | 60 | #6–2/0 | Indoor | D1 | GBK10 | 96 | **BR3060LQN125G** |
| Main lug only | 200 | 30 | 60 | #1–300 kcmil | Indoor | D1 | GBK1020 + GBK10 | 96 | **BR3060LQN200G** |
| Main lug only | 200 | 40 | 80 | #1–300 kcmil | Indoor | G1 | GBK1020 + GBK10 | 122 | **BR4080LQN200G** |
| Main lug only | 125 | 20 | 40 | #6–2/0 | Outdoor | C1R | GBK14 | 68 | **BR2040LQN125RG** |
| Main lug only | 200 | 30 | 60 | #1–300 kcmil | Outdoor | D1R | GBK1420 | 94 | **BR3060LQN200RG** |
| Convertible | 200 | 30 | 60 | — | Indoor | G1 | ④ | 102 | **BR3060NQN200** |
| Convertible | 200 | 40 | 80 | — | Indoor | L1 | ④ | 128 | **BR4080NQN200** |
| Convertible | 200 | 30 | 60 | — | Outdoor | G1R | ④ | 94 | **BR3060NQN200R** |
| Convertible | 200 | 40 | 80 | — | Outdoor | L1R | ④ | 128 | **BR4080NQN200R** |

### BR Quick Connect Neutral Electronic Breakers

| Ampere Rating | Poles | Wire Size | Breaker Type | LED Diagnostics Included | Catalog Number |
|---|---|---|---|---|---|
| 15 | Single-pole 10 kAIC | #14–4 | Combination AFCI | Yes | **BRCAF115QN** |
| 20 | Single-pole 10 kAIC | #14–4 | Combination AFCI | Yes | **BRCAF120QN** |
| 15 | Single-pole 10 kAIC | #14–4 | Arc fault/ground fault | Yes | **BRLAFGF115QN** |
| 20 | Single-pole 10 kAIC | #14–4 | Arc fault/ground fault | Yes | **BRLAFGF120QN** |

***Notes***

① BR Quick Connect Neutral loadcenters accept both standard and Quick Connect Neutral breakers.
② Loadcenters accept Type BR twin breakers.
③ Combination cover included with every indoor loadcenter.
④ Ground bar kit not included. Purchase separately.

Spa Panels

## Contents—BR Specialty Products


| *Description* | *Page* |
|---|---|
| Overview | **V1-T1-42** |
| BR Specialty Products | |
| BR Quick Connect Neutral Loadcenters | **V1-T1-57** |
| Spa Panels | |
| Riser Panel | **V1-T1-59** |
| Type BR Renovation Loadcenter | **V1-T1-60** |
| Type BR Mechanical Interlock Kits | **V1-T1-62** |
| Type BR Retrofit Interior Kits | **V1-T1-73** |
| BR Circuit Breakers | **V1-T1-76** |


## Spa Panels

### Product Description

Eaton's BR Spa Panels distribute power to outdoor loads and provide protection for people from electric shock. Save time and money with streamlined installation procedures and easy-access features. Spa panels meet NEC requirements by providing a ground fault circuit interruption device and a disconnect switch in a single simple device. Ships assembled prewired, factory tested and ready to install.

### Features

- 10-year warranty
- UL Listed
- Factory-installed two-pole ground fault circuit interrupter (GFCI)

### Product Selection

BR Spa Panel

**Spa Panel—Meets NEC Article 680.40 Through 680.43—Requirements for GFCI Protection**

| Main Ampere Rating | Maximum Number 1-Inch (25.4 mm) Space | Poles | Enclosure Type | Box Size | Wire Size Range Cu/Al 60 °C or 75 °C for Main Lugs | Catalog Number |
|---|---|---|---|---|---|---|
| 40 | — | — | Outdoor | 5R | #8–#2 | **BR40SPA** ① |
| 50 | — | — | Outdoor | 5R | #8–#2 | **BR50SPA** ② |

***Notes***

① Includes a GFCB240 breaker, factory installed.

② Includes a GFCB250 breaker, factory installed.

Riser Panel

## Contents—BR Specialty Products


| *Description* | *Page* |
|---|---|
| Overview | V1-T1-42 |
| BR Specialty Products | |
| BR Quick Connect Neutral Loadcenters | V1-T1-57 |
| Spa Panels | V1-T1-58 |
| Riser Panel | |
| Type BR Renovation Loadcenter | V1-T1-60 |
| Type BR Retrofit Interior Kits | V1-T1-73 |
| BR Circuit Breakers | V1-T1-76 |


# Riser Panel

## Product Description

Eaton's Riser Panel is a loadcenter with an offset interior to allow riser cables to pass through the enlarged gutter. By using lay-in tap lugs, the contractor is able to simply strip off a length of the riser cable's insulation, and tap off to the riser panel's main lugs. These panels are used in the construction of assisted living homes, dormitories, public housing complexes and apartments.

## Product Selection

BR1224L125RIS

### Riser Panel

| Main Ampere Rating | Maximum Number 1-Inch (25.4 mm) Space | Circuits | Enclosure Type | Box Size | Wire Size Range Cu/Al 60 °C or 75 °C for Main Lugs | Catalog Number |
|---|---|---|---|---|---|---|
| 125 | 12 | 24 | Indoor | C4 | #6–2/0 | **BR1224L125RIS** |
| 125 | 12 | 24 | Indoor | C4 | #6–2/0 | **BR1224L125RISBP** ① |
| 125 | 20 | 24 | Indoor | C4 | #6–2/0 | **BR2024L125RIS** |
| 125 | 20 | 24 | Indoor | C4 | #6–2/0 | **BR2024L125RISBP** ① |
| 125 | 20 | 30 | Indoor | C2 | #6–2/0 | **BR2030L125RIS** |
| 200 | 30 | 40 | Indoor | D1 | #1–300 | **BR3040L200RIS** |

BRGUTTER (Shown with Loadcenter)

### Riser Panel Accessories

| Catalog Number |
|---|
| **BRGUTTER** ② |
| **GTAP250** |

***Notes***

① Bulk-packaged loadcenter without carton. Must be ordered in multiples of 16.

② Refer to **Page V1-T1-68** for dimensions. BRGUTTER is box size C2.

## Accessories

For riser panels not shown, contact the Flex Center at 1-800-330-6479 for both CH and BR riser panels.

**BR Renovation Loadcenters**

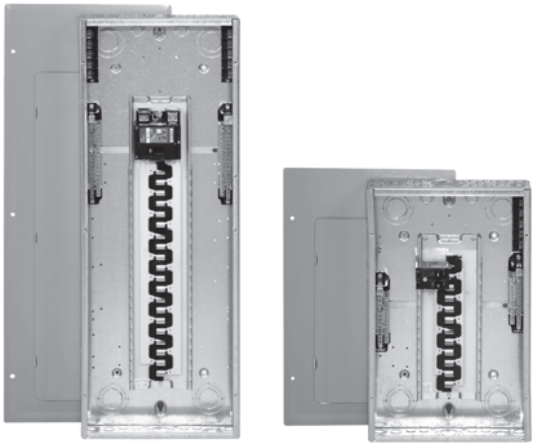

## Contents—BR Specialty Products


| *Description* | *Page* |
|---|---|
| Overview | **V1-T1-42** |
| BR Specialty Products | |
| BR Quick Connect Neutral Loadcenters | **V1-T1-57** |
| Spa Panels | **V1-T1-58** |
| Riser Panel | **V1-T1-59** |
| Type BR Renovation Loadcenter Options and Accessories | **V1-T1-61** |
| Type BR Retrofit Interior Kits | **V1-T1-73** |
| BR Circuit Breakers | **V1-T1-76** |


## Type BR Renovation Loadcenter

### Product Description

- Available in 10, 20, 30 and 40 circuit main breaker styles
- Designed to replace existing loadcenters and fuse boxes
- Type BR loadcenter packaged with circuit breakers
- Factory-installed 5-circuit terminal block(s)
- Twin-stacked neutral design

***Quick-Pro℠***

All you need to know to save time and make more money. Specified on certain Eaton products, the Quick-Pro symbol allows for immediate recognition of products that are designed for straightforward installation. When you see Quick-Pro, you know you can install quickly—sometimes up to 50% less than the usual installation time—and move on to your next job.

### Features, Benefits and Functions

- Factory-installed terminal block(s) allows installer to terminate existing short wires without using wire nuts or junction boxes
- Twin-stacked neutrals are mounted up high in the loadcenter, which allows for all neutral and ground wires to be terminated in the top half of the loadcenter
- Specifically designed for the service contractor—this is the ONLY renovation line in the industry
- Single-pole and two-pole breakers included
- 10-year warranty on loadcenter and breakers

### Product Selection

**BR2020B100RN**

**BR Value Packs** ①

| Main Breaker Type | Description | Wire Size Range | Number of 5-Circuit Terminal Blocks | Single-Pole Breakers | Two-Pole Breakers | Catalog Number |
|---|---|---|---|---|---|---|
| BR 10 kAIC | Single-phase 100 A 10k main breaker 10/20 circuit surface-mount box is 11.75" wide x 13" tall | #6–1/0 | 0 | (2) BR115 | (1) BR230 | **BR1020B100SRNV** |
| | Single-phase 100 A 10k main breaker 10/20 circuit flush-mount box is 11.75" wide x 13" tall | | 0 | (2) BR115 | (1) BR230 | **BR1020B100FRNV** |

***Note***

① Indoor enclosure type.

## Options and Accessories

BRSF125

3BRS225

BRL200

TDL

### Field Installation Kits and Parts

| Number of Poles | Ampere Rating | Number of 1-Inch (25.4 mm) Spaces Needed | Wire Size Range Cu/Al 60 °C or 75 °C | Ordering Quantity ① | Catalog Number |
|---|---|---|---|---|---|
| **Main and Sub-Feed Lug Blocks** | | | | | |
| 2 | 125 | 2 | #8–2/0 | 1 | **BRSF125** |
| | 150 | 2 | #8–2/0 | 1 | **BRSF150** ② |
| | 225 | 4 | #2–300 kcmil | 1 | **BRS225** |
| 3 | 150 | 3 | #8–2/0 | 1 | **3BRSF150** ② |
| | 225 | 6 | #2–300 kcmil | 1 | **3BRS225** |
| **Main Lugs** | | | | | |
| Two-pole, 200 A stud mounted (includes deadfront filler plate) | | | #1–300 kcmil | 1 | **BRL200** |
| Neutral/ground lug<br>Add-on neutral or ground lug | | | #2/0 maximum | 1 | **NL20** |
| | | | #3/0 maximum | 1 | **NL30** |
| | | | 300 kcmil maximum | 1 | **NL300** |
| **Filler Plates** | | | | | |
| 1-inch (25.4 mm) circuit breaker space | | | | 25 | **BRFP** |
| BW main circuit breaker space (with hardware) | | | | 1 | **BWFP** |
| Door lock —12–42 circuits, and 100–225 A | | | | 1 | **TDL** |
| Door lock—4–8 circuits, 125 A | | | | 1 | **CH9FL** |
| ANSI-61 light gray touchup paint for current loadcenters | | | | 1 | **SPC61** |
| Isolated neutral assembly (computer circuits) | | | | 1 | **BINA** |
| Circuit directory—adhesive backed | | | | 10 | **TCD** |
| Cover screws | | | | 25 | **LCCS** |
| Cover replacement latch (gray) 14-5/16 (363.5 mm) wide loadcenters only | | | | 1 | **BRRL** |
| Circuit marking strip (next to breaker) | | | | 10 | **BRMS** |
| Circuit identification label (preprinted breaker labels) | | | | 25 | **CHBL** |
| Series rated caution label | | | | 25 | **SRL** |
| Bonding strip with screw | | | | 1 | **BSSUSE** |

***Notes***

① Must be purchased in multiples of ordering quantities indicated.
② #8–2/0 wire size range is 75 °C rated only.

*Type BR Loadcenter with Mechanical Interlock Kit*

## Contents


| *Description* | *Page* |
|---|---|
| Overview | **V1-T1-42** |
| BR Specialty Products | |
| BR Quick Connect Neutral Loadcenters | **V1-T1-57** |
| Spa Panels | **V1-T1-58** |
| Riser Panel | **V1-T1-59** |
| Type BR Renovation Loadcenter | **V1-T1-60** |
| Type BR Retrofit Interior Kits | **V1-T1-73** |
| Type BR Mechanical Interlock Kits | |
| BR Circuit Breakers | |
| Product Selection | **V1-T1-77** |
| Circuit Breaker Accessories | **V1-T1-85** |
| Wiring Diagrams | **V1-T1-87** |


## Type BR Mechanical Interlock Kits

### Product Description

With the aging electrical infrastructure and frequent severe storms, power outages are becoming more and more frequent, affecting thousands of people nationwide. Eaton mechanical interlock kit provides an easy and cost-effective solution when using backup emergency power.

This solution expands the robust line of emergency power products and accessories.

### Features and Benefits

- Prevents utility and generator supplies from being on at the same time
- Protects utility linemen from dangerous generator backfeed
- Robust interlock design
- Offered in two unique styles for almost any BR loadcenter, which can reduce inventory levels
- Quick and easy installation—drill points or fixtures for pilot holes are provided on all applicable BR loadcenters; no additional assembly is required

### Standards and Certifications

- UL 67 Listed—For use with BR loadcenters
- Meets NEC® Article 702

## Product Selection

Each mechanical interlock kit includes:

- Interlock assembly
- Hold down kit ①
- New labels
- Necessary screws

Warranty information:

- 10-year warranty on all Type BR circuit breakers and loadcenters
- Refer to Eaton for complete warranty details

### Mechanical Interlock Kits ②

| | Description | Catalog Number |
|---|---|---|
| **BRMIKBR** | Single | **BRMIKBR** |
| | Bulk pack ③ | **BRMIKBRBP** |
| **BRMIKCSR** | Single | **BRMIKCSR** |
| | Bulk pack ③ | **BRMIKCSRBP** |

***Notes***

① For breakers under 70 A used in backfed applications, add "B" to the end of the catalog string to get the appropriate "hold-down" version.
② Clamshell packaged.
③ Bulk pack contains 10 units, individually packaged.

1

***Mechanical Interlock Cover***

Covers mechanically interlock two breakers—Type BW or CSR main breaker with a Type BR branch breaker.

**BR816B100**

## Mechanical Interlock Cover

| Fits Loadcenter Catalog Numbers | Mechanical Interlock Trim/Deadfront Catalog Numbers | Mechanical Interlock Kit Catalog Numbers |
|---|---|---|
| **Indoor** | | |
| BR816B100 | BRCOVC10M | BRMIKBR |
| BR816N100 | | |
| BR1212B100 | BRCOVC12M | |
| BR1220B100 | | |
| BR1220H100 | | |
| BR1224N125 | BRCOVC13M | |
| BR1616B100 | BRCOVC16M | |
| BR1620B100 | | |
| BR1624B100 | | |
| BR1624B125 | BRCOVC17M | |
| BR1624N125 | | |
| BR2020B100, BR2020BC100<br>BR2020H100, BR2020HC100 | BRCOVC22M | |
| BR2024H100 | | |
| BR2020HC100 | | |
| BR2030B100 | | |
| BR2040B100 | | |
| BR2024B125 | BRCOVC23M | |
| BR2024N125, BR2024NC125 | | |
| BR3030B100, BR3030BC100 | BRCOVC59M | |
| BR3030H100, BR3030HC100 | | |
| **Raintight** | | |
| BR1020B100R | BR3RDF1M | Field-installed interlock kits not available for these catalog numbers. |
| BR1224B100R | | |
| BR1224N125R, BR1224NC125R | | |
| BR1624B100R | BR3RDF2M | |
| BR1624N125R | | |
| BR2024B100R, BR2024B125R | BR3RDF4M | |
| BR2024N125R, BR2024NC125R | | |

BR4040B200

## Mechanical Interlock Cover, continued

| Fits Loadcenter Catalog Numbers | Mechanical Interlock Trim/Deadfront Catalog Numbers | Mechanical Interlock Kit Catalog Numbers |
|---|---|---|
| **Indoor** | | |
| BR1630B150 | BRCOV16C4FM | BRMIKCSR |
| BR1224N200 | | |
| BR1632B200 | | |
| BR1632N200 | | |
| BR2030B150 | BRCOV20C4FM | |
| BR2030H150 | | |
| BR2040B150 | | |
| BR2040B200, BR2040BC200 | BRCOV20D1FM | |
| BR2040H200 | | |
| BR2040N200, BR2040NC200 | | |
| BR2430B150, BR2430BC150 | BRCOV30G1FM | |
| BR3030B150 | | |
| BR3030H150 | | |
| BR3040B150 | | |
| BR2440B200 | | |
| BR2440N200 | | |
| BR3040B200, BR3040BC200 | | |
| BR3040N200, BR3040NC200 | | |
| BR3040H200 | | |
| BR4040B200, BR4040BC200 | BRCOV40L1FM | |
| BR4040H200 | | |
| BR4040N200, BR4040NC200 | | |
| BR4242B225 | BRCOV42L2FM | |
| **Raintight** | | |
| BR816B150RF | BR3RDF5M ① | |
| BR816B200RF | | |
| BR816N200RF | | |
| BR1224N200R | | |
| BR2030B150R | BR3RDF11M ① | |
| BR2040B150R | | |
| BR2040B200R | | |
| BR2040B225R | | |
| BR2040N200R | | |
| BR3030B150R | BR3RDF12M ① | |
| BR3040B200R | | |
| BR3040N200R | | |
| BR4040B200R | BR3RDF13M ① | |
| BR4040N200R | | |
| BR48B200RF | BR3RDF14M | |
| BR4242B225R | BR3RDF15M ① | |
| **Mechanical Interlock Loadcenter Replacement Covers ②** | | |
| BR2020B100M, BR2020BC100M | BRCOV20C2FM | Field-installed interlock kits not available for these catalog numbers. |
| BR2024H100M | | |
| BR3030BC100M | BRCOV30D1FM | |

***Notes***

① Deadfront only.

② Can only be provided as replacement covers for factory-installed mechanically interlock loadcenters.

DS300H2

## Field Installation Rainproof Conduit Hubs

| Description | Conduit Size Inches (mm) | Ordering Quantity ① | Catalog Number |
|---|---|---|---|
| Group 1—for use with 70, 100 and 125 A MLO and MCB loadcenters and circuit breaker enclosures and the following 150 and 200 A panels: BR48B200RF | 0.75 (19.1) | 1 | **DS075H1** |
| | 1.00 (25.4) | 1 | **DS100H1** |
| | 1.25 (31.8) | 1 | **DS125H1** |
| | 1.50 (38.1) | 1 | **DS150H1** |
| | 2.00 (50.8) | 1 | **DS200H1** |
| Group 2—for use with 150, 200 and 225 A MLO and MCB loadcenters and circuit breaker enclosures except for the following 200 A loadcenters: BR48B200RF. Also for use with 400 and 600 A loadcenters and New York City loadcenters manufactured after November 1, 2005 | 2.00 (50.8) | 1 | **DS200H2** |
| | 2.50 (63.5) | 1 | **DS250H2** |
| | 3.00 (76.2) | 1 | **DS300H2** |
| Type H conduit hubs for loadcenters PL0724R and S3100RN | 0.75 (19.1) | 1 | **RH75P** |
| | 1.00 (25.4) | 1 | **RH100P** |
| | 1.25 (31.8) | 1 | **RH125P** |
| | 1.50 (38.1) | 1 | **RH150P** |
| Adapter kit—Allows Installing a Group 1 hub on devices arranged for Group 2 hubs | — | 1 | **DS900AP** |
| Group 1 small blank hub plate with bump | — | 1 | **DS900CP1** |
| Group 2 Large blank hub plate with bump | — | 1 | **DS900CP2** |

GBK14

BRGBK39512

## Ground Bar Kits

| Description (See Legend) | Length Inches (mm) | Ordering Quantity ① | Catalog Number |
|---|---|---|---|
| ●○○○○●○ | 2.54 (64.5) | 1 | **GBK5** ② |
| ●○○○○●○■ | 3.59 (91.2) | 1 | **GBK520** ② |
| ●○○○○●○○○○○○ | 4.29 (109.0) | 1 | **GBK10** ② |
| ●○○○○●○○○○○○■ | 5.34 (135.6) | 1 | **GBK1020** ② |
| ◒●◒◒◒⬓◒●◒⬓◒◒◒ | 4.61 (117.1) | 1 | **GBK13** ② |
| ●○○○○●○○○○○○○○○○ | 5.69 (144.5) | 1 | **GBK14** ② |
| ●○○○○●○○○○○○○○○○■ | 6.74 (171.2) | 1 | **GBK1420** ② |
| ●○○○○●○○○○○○○○○○○○○○○○ | 8.14 (206.8) | 1 | **GBK21** ② |
| ●○○○○●○○○○○○○○○○○○○○○○○■ | 9.19 (233.4) | 1 | **GBK2120** ② |
| ◒⬓◒●◒⬓◒◒◒⬓◒●◒⬓◒◒◒⬓◒ | 5.78 (146.8) | 1 | **BRGBK39512** ③④ |
| ○○○○○ | 1.84 (46.7) | 1 | **GB4NM** ⑤ |

**Ground Bar Legend**

- ○ (3) #14–10 Cu/Al or (1) #14–4 Cu/Al
- ■ (1) #6–2/0 Cu/Al
- ⬓ (1) #14–1/0 Cu/Al or (3) #14–10 Cu/Al
- ◒ (1) #14–6 Cu/Al or (2) #14–12 Cu/Al
- ● Mounting Hole

***Notes***

① Must be purchased in multiples of ordering quantities indicated.
② Distance between mounting holes is 1.75 inches (44.5 mm).
③ For single- and three-phase 400 and 600 A applications.
④ Distance between mounting holes is 2.34 inches (59.5 mm).
⑤ For non-metallic enclosures. Snaps into molded base.

## Dimensions

Approximate Dimensions in Inches (mm)

***Residential/Commercial/New York City Loadcenters, Unit Enclosures—Box Sizes***

**Note:** Box sizes do not include covers/fronts.

### Residential Loadcenters—NEMA Type 1 Indoor

| Box Size | Height | Width | Depth |
|---|---|---|---|
| A1 | 15.00 (381.0) | 11.25 (285.8) | 3.75 (95.3) |
| B1 | 16.75 (425.5) | 14.31 (363.5) | 3.88 (98.4) |
| B2 | 18.75 (476.3) | 14.31 (363.5) | 3.88 (98.4) |
| C1 | 21.00 (533.4) | 14.31 (363.5) | 3.88 (98.4) |
| C2 | 23.00 (584.2) | 14.31 (363.5) | 3.88 (98.4) |
| C4 | 27.00 (685.8) | 14.31 (363.5) | 3.88 (98.4) |
| D1 | 29.13 (739.8) | 14.31 (363.5) | 3.88 (98.4) |
| G1 | 34.13 (866.8) | 14.31 (363.5) | 3.88 (98.4) |
| L1 | 39.00 (990.6) | 14.31 (363.5) | 3.88 (98.4) |
| L2 | 45.00 (1143.0) | 14.31 (363.5) | 3.88 (98.4) |
| L3 | 48.38 (1228.3) | 14.31 (363.5) | 3.88 (98.4) |
| 2 | 8.63 (219.1) | 5.00 (127.0) | 3.50 (88.9) |
| 3 | 9.44 (239.7) | 4.50 (114.3) | 3.00 (76.2) |
| 4 | 13.00 (330.2) | 11.00 (279.4) | 3.56 (90.5) |
| 5 | 9.44 (239.7) | 4.50 (114.3) | 3.00 (76.2) |
| 6 | 12.00 (304.8) | 6.88 (174.6) | 4.50 (114.3) |
| 7 | 13.00 (330.2) | 11.00 (279.4) | 3.56 (90.5) |
| 9 | 14.50 (368.3) | 6.50 (165.1) | 3.50 (88.9) |

### Residential Loadcenters—NEMA Type 3R Outdoor

| Box Size | Height | Width | Depth |
|---|---|---|---|
| B1R | 16.75 (425.5) | 14.31 (363.5) | 5.19 (131.8) |
| B2R | 18.75 (476.3) | 14.31 (363.5) | 5.19 (131.8) |
| C3R | 25.00 (635.0) | 14.31 (363.5) | 5.19 (131.8) |
| D1R | 29.13 (739.8) | 14.31 (363.5) | 5.19 (131.8) |
| G1R | 34.13 (866.8) | 14.31 (363.5) | 5.19 (131.8) |
| L1R | 39.00 (990.6) | 14.31 (363.5) | 5.19 (131.8) |
| L2R | 45.00 (1143.0) | 14.31 (363.5) | 5.19 (131.8) |
| L3R | 48.75 (1238.2) | 14.31 (363.5) | 5.19 (131.8) |
| 2R | 8.63 (219.1) | 5.00 (127.0) | 3.50 (88.9) |
| 3R | 9.44 (239.7) | 4.50 (114.3) | 3.00 (76.2) |
| 4R | 13.00 (330.2) | 11.00 (279.4) | 3.56 (90.5) |
| 5R | 9.44 (239.7) | 4.50 (114.3) | 3.00 (76.2) |
| 6R | 11.75 (298.5) | 6.50 (165.1) | 4.50 (114.3) |
| 7R | 13.00 (330.2) | 11.00 (279.4) | 3.56 (90.5) |
| 8R | 27.00 (685.8) | 10.50 (266.7) | 4.75 (120.7) |
| 9R | 14.25 (362.0) | 6.50 (165.1) | 4.00 (101.6) |
| C1R | 21.00 (533.4) | 14.31 (363.5) | 5.19 (131.8) |

### Commercial Loadcenters—NEMA Type 1 Indoor

| Box Size | Height | Width | Depth |
|---|---|---|---|
| 19 | 44.00 (1117.6) | 16.16 (410.4) | 6.25 (158.8) |
| 20 | 44.00 (1117.6) | 16.16 (410.4) | 6.25 (158.8) |
| 22 | 54.00 (1371.6) | 16.22 (412.0) | 6.31 (160.3) |
| 24 | 66.50 (1689.1) | 16.22 (412.0) | 6.31 (160.3) |

### Commercial Loadcenters—NEMA Type 3R Outdoor

| Box Size | Height | Width | Depth |
|---|---|---|---|
| 42 | 38.00 (965.2) | 16.31 (414.3) | 6.38 (161.9) |
| 43 | 44.00 (1117.6) | 16.31 (414.3) | 6.38 (161.9) |
| 46 | 54.00 (1371.6) | 16.31 (414.3) | 6.38 (161.9) |
| 47 | 66.56 (1690.7) | 16.31 (414.3) | 6.38 (161.9) |

### New York City Loadcenters—NEMA Type 1 Indoor

| Box Size | Height | Width | Depth |
|---|---|---|---|
| A | 38.00 (965.2) | 18.13 (460.4) | 5.00 (127.0) |
| B | 44.00 (1117.6) | 18.13 (460.4) | 5.00 (127.0) |
| C | 66.50 (1689.1) | 18.13 (460.4) | 6.25 (158.8) |

### ECC Unit Enclosures—NEMA Type 1 Indoor

| Height | Width | Depth |
|---|---|---|
| 23.25 (590.6) | 8.88 (225.4) | 4.50 (114.3) |

### ECC Unit Enclosures—NEMA Type 3R Outdoor

| Height | Width | Depth |
|---|---|---|
| 23.68 (601.7) | 9.31 (236.5) | 5.44 (138.1) |

1

Approximate Dimensions in Inches (mm)

***Residential Loadcenter Knockouts***

## Knockouts for Box Sizes A1, B1, B2, C1, C2, C4, D1, G1, L1, L2, B1R, B2R, C1R, C3R, D1R, G1R, L1R, L2R

| Code | Diameter | | | | |
|---|---|---|---|---|---|
| A | 0.50 (12.7) | 0.75 (19.1) | — | — | — |
| B | 0.50 (12.7) | — | — | — | — |
| C | 0.50 (12.7) | 1.25 (31.8) | 1.50 (38.1) | 2.00 (50.8) | 2.50 (63.5) |
| D | 1.25 (31.8) | 1.25 (31.8) | 2.00 (50.8) | 2.50 (63.5) | — |
| E | 0.50 (12.7) | 0.75 (19.1) | 1.00 (25.4) | — | — |
| F | 0.50 (12.7) | 0.75 (19.1) | 1.00 (25.4) | 1.50 (38.1) | 2.00 (50.8) |
| G | 1.25 (31.8) | 1.50 (38.1) | 2.00 (50.8) | — | — |
| H | 0.50 (12.7) | 0.75 (19.1) | 1.00 (25.4) | 1.25 (31.8) | 1.50 (38.1) |
| I | 1.00 (25.4) | 1.25 (31.8) | 1.50 (38.1) | 2.00 (50.8) | 2.50 (63.5) |
| J | 1.00 (25.4) | 1.25 (31.8) | 1.50 (38.1) | — | — |

## Residential NEMA Type 1 Indoor and NEMA Type 3R Outdoor Enclosures

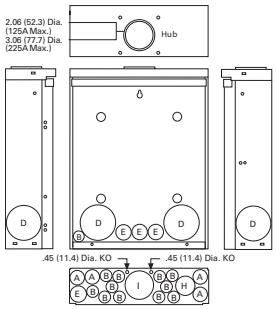


***Outdoor Boxes B1R, B2R, C1R, C3R, D1R, G1R, L1R, L2R***

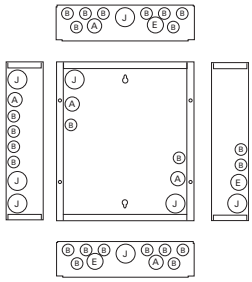

***Indoor Boxes A1***

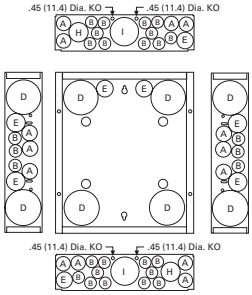


***Indoor Boxes B1, B2***

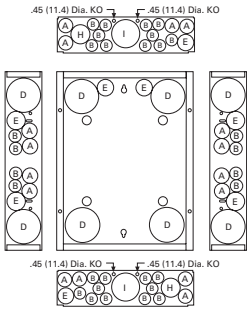


***Indoor Boxes C1, C2, C4, D1, G1, L1, L2***

Approximate Dimensions in Inches (mm)

### Knockouts for Box Sizes 3, 4, 5, 6, 7, 9, 2R, 3R, 4R, 5R, 6R, 7R, 8R, 9R

| Code | Diameter | | | |
|---|---|---|---|---|
| A | 0.50 (12.7) | — | — | — |
| B | 0.50 (12.7) | 0.75 (19.1) | — | — |
| C | 0.50 (12.7) | 0.75 (19.1) | 1.00 (25.4) | — |
| D | 0.50 (12.7) | 0.75 (19.1) | 1.00 (25.4) | 1.25 (31.8) |
| E | 0.75 (19.1) | 1.00 (25.4) | 1.25 (31.8) | — |
| F | 0.75 (19.1) | 1.00 (25.4) | 1.25 (31.8) | 1.50 (38.1) |
| G | 1.00 (25.4) | 1.25 (31.8) | 1.50 (38.1) | — |
| H | 1.00 (25.4) | 1.25 (31.8) | 1.50 (38.1) | 2.00 (50.8) |
| I | 1.25 (31.8) | 1.50 (38.1) | 2.00 (50.8) | — |

### Residential NEMA Type 1 Indoor and NEMA Type 3R Outdoor Enclosures

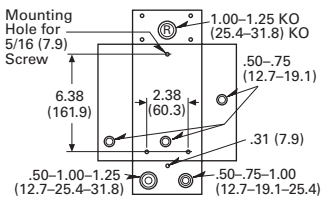


*Box 2, 2R*

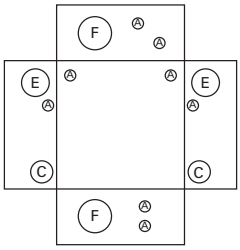

*Box 3*

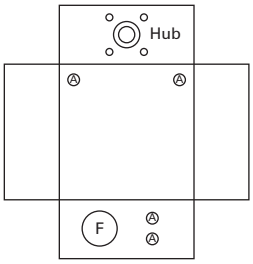


*Box 3R*

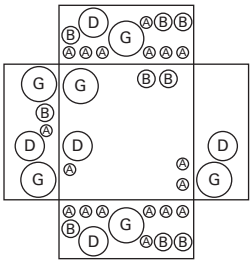

*Box 4*

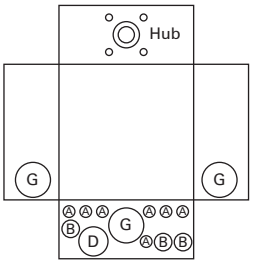


*Box 4R*

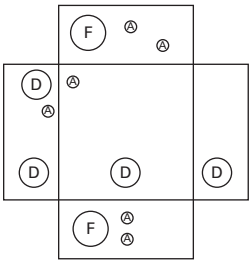

*Box 5*

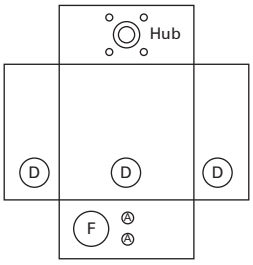


*Box 5R*

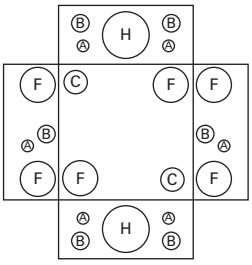

*Box 6*

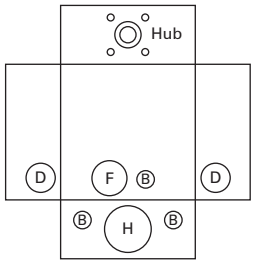


*Box 6R*

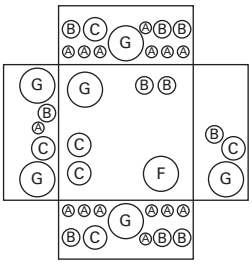

*Box 7*

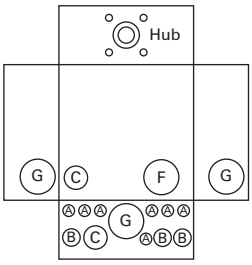


*Box 7R*

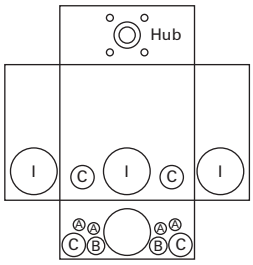


*Box 8R*

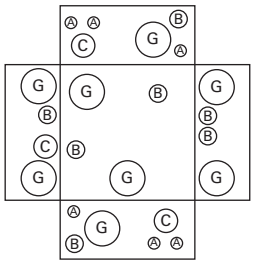

*Box 9*

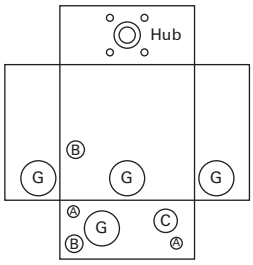


*Box 9R*

1

Approximate Dimensions in Inches (mm)

***Commercial Loadcenter Knockouts***

### NEMA Type 1 Indoor Commercial Enclosures Knockouts for Box Sizes 19, 20, 22, 24

| Code | Diameter | | | |
|---|---|---|---|---|
| A | 0.50 (12.7) | — | — | — |
| B | 0.50 (12.7) | 0.75 (19.1) | — | — |
| C | 0.75 (19.1) | 1.00 (25.4) | 1.50 (38.1) | — |
| D | 1.50 (38.1) | 2.00 (50.8) | 2.50 (63.5) | 3.00 (76.2) |
| E | 2.00 (50.8) | 2.50 (63.5) | 3.00 (76.2) | — |
| F | 2.50 (63.5) | 3.00 (76.2) | 3.50 (88.9) | — |

### NEMA Type 3R Outdoor Commercial Enclosures Knockouts for Box Sizes 42, 43, 46, 47

| Code | Diameter | | | |
|---|---|---|---|---|
| A | 0.50 (12.7) | — | — | — |
| B | 0.50 (12.7) | 0.75 (19.1) | — | — |
| C | 0.75 (19.1) | 1.00 (25.4) | 1.25 (31.8) | — |
| D | 1.50 (38.1) | 2.00 (50.8) | 2.50 (63.5) | — |
| E | 2.00 (50.8) | 2.50 (63.5) | 3.00 (76.2) | — |
| F | 2.50 (63.5) | 3.00 (76.2) | 3.50 (88.9) | — |
| G | 1.25 (31.8) | 1.50 (38.1) | 2.00 (50.8) | 2.50 (63.5) |
| H | 3.25 (82.6) Sq. | — | — | — |

### Unit Enclosure Knockouts, Types ECB and ECC Knockouts

| Code | Diameter | | | | |
|---|---|---|---|---|---|
| **NEMA Type 1 Indoor (Flush and Surface Trims)** | | | | | |
| A | 0.50 (12.7) | — | — | — | — |
| B | 1.25 (31.8) | 1.50 (38.1) | 1.75 (44.5) | 2.00 (50.8) | 2.50 (63.5) |
| **NEMA Type 3R Outdoor** | | | | | |
| A | 0.50 (12.7) | — | — | — | — |
| B | 1.25 (31.8) | 1.50 (38.1) | 1.75 (44.5) | 2.00 (50.8) | 2.50 (63.5) |

### Indoor Commercial Enclosures

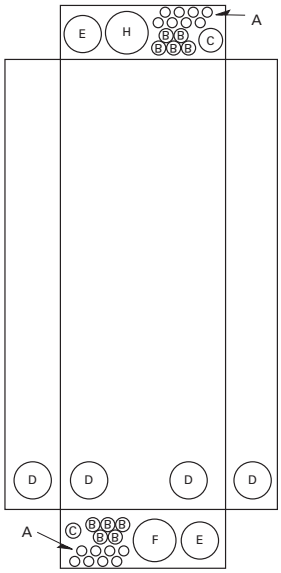


*Box 19, 20*

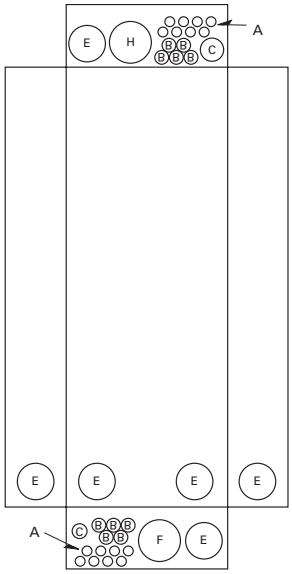


*Box 22, 24*

### Outdoor Commercial Enclosures

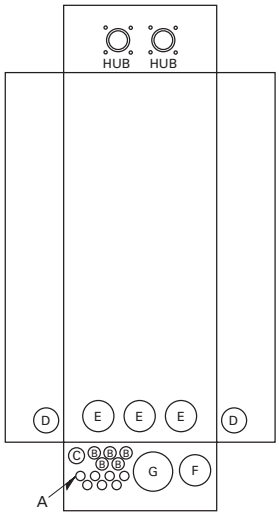


*Box 42*

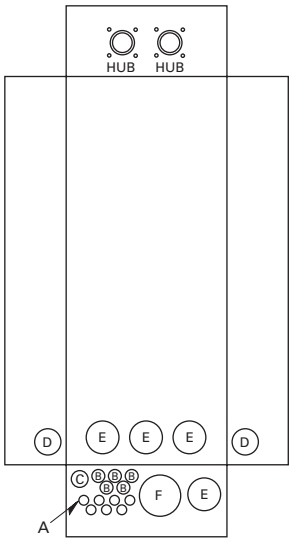


*Box 43, 46, 47*

### Unit Enclosure Knockouts

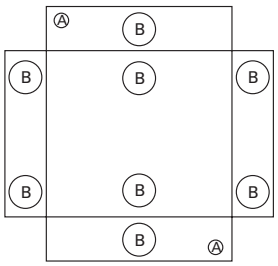


*NEMA Type 1—Indoor*

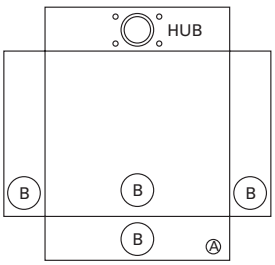


*NEMA Type 3R—Outdoor*

## Technical Data and Specifications

### General

A. The Contractor shall furnish and install deadfront loadcenters incorporating circuit breakers of the number, rating and type as specified herein and as shown on the contract drawings.

B. The loadcenter and all components shall be designed, manufactured and tested in accordance with the latest applicable standards of UL, NEMA and NEC including:

1. UL 67—Standards for Panelboards.

C. UL 50—Standards for Cabinets and Boxes.

D. UL 489—Standards for Molded Case Circuit Breakers.

E. UL 869—Standards for Service Equipment.

F. Federal Specification W-C 375B—Circuit Breakers.

G. Federal Specification W-C P115b—Panel Power Distribution Type 1, Class 2.

### Qualifications

A. The manufacturer of the loadcenter shall be the manufacturer of the circuit breaker within the loadcenter.

B. For the equipment specified herein, the manufacturer shall be ISO 9000 certified.

C. The manufacturer of this equipment shall have produced similar electrical equipment for a minimum period of seven (7) years.

### Manufacturers

A. Eaton.

### Ratings

A. Loadcenters shall be rated for 120/240 Vac and shall have short-circuit ratings as shown on the drawings or as herein scheduled, but not less than 10,000 amperes rms symmetrical.

B. Circuit breakers shall be a minimum of 125 A frame. Circuit breakers 15 through 125 A trip size shall take up the same pole spacing.

C. Loadcenters shall be labeled with a UL short-circuit rating. When series combination ratings are applied with integral or remote upstream devices, a label shall be provided. Series combination ratings shall cover all trip ratings of installed frames. It shall state the conditions of the UL series ratings including:

1. Size and type of upstream device.

2. Branch devices that can be used.

3. UL series short circuit rating.

### Construction

A. All interiors, with the exception of the branch circuit breakers, shall be completely factory assembled with main breakers, main lugs, or no main device.

B. Interiors shall be designed so that circuit breakers can be replaced without disturbing adjacent units and without removing the main bus connectors and shall be designed so that circuits may be changed without machining, drilling, or tapping.

C. Physical means shall be provided to prevent the installation of more overcurrent devices than that number for which the enclosure was designed, rated and approved. Half-size breakers shall have a UL listed rejection tab over the line terminals. Loadcenter interiors must have notched stabs to accept these rejection tab class CTL breakers, if required and approved.

### Bus

A. Busbars for the main and cross connectors shall be [tin-plated aluminum] [copper] in accordance with Underwriters Laboratories standards. Busing shall be braced throughout to conform to industry standard practice governing short-circuit stresses in loadcenters.

**Note:** Note to spec writer—select one (copper available in limited ratings).

B. Neutral busing shall have a suitable lug for each outgoing feeder requiring a neutral connection of same ampacity as branch.

### Wiring/Termination

A. All wire connectors and terminals shall be of the anti-turn solderless type and shall be suitable for copper or aluminum wire of the sizes indicated. All connectors must meet the "Requirements for Wire Connectors and Soldering Lugs" as stated in UL 486B.

B. All loadcenters where marked shall be suitable for use with 60 °C or 75 °C rated wire.

### Circuit Breakers

A. Circuit breakers shall be molded case type. Circuit breakers shall have four-rivet construction (GFI Type—5 rivets). Multipole circuit breakers shall be of a stack pole design to provide electrical phase isolation.

B. Each pole of the circuit breaker will provide inverse time delay overload and instantaneous short-circuit protection by means of both thermal and magnetic sensors.

C. The circuit breaker calibration shall not be affected by environmental changes in relative humidity. The thermal bimetal element shall be welded to the steel frame and calibration shall be set independent of the molded case by computer controlled equipment.

D. All circuit breakers shall be operated by a toggle-type handle and multipole circuit breakers shall have an internal common trip mechanism. The circuit breakers shall incorporate trip mechanisms that are mechanically trip-free from the handle. The handle position shall provide visual trip indication.

E. Contacts shall be of non-welding silver alloy.

F. All circuit breakers shall have the trip rating inscribed on the handle on each circuit breaker pole. Also, unique color-coded cases that indicate the UL listed 10 kA or 22 kA interrupting ratings. Breakers shall be able to be used as main or branch disconnect devices.

G. Branch circuit breakers may also be used in the 1/2-inch (12.7 mm) per pole ratings that include two-pole 1-inch (25.4 mm) wide modules and four-pole 2-inch (50.8 mm) wide modules. Two-pole circuit breakers must incorporate a common trip mechanism. The exclusive CTL rejection tab feature shall be provided to limit the number of branch devices for a loadcenter to 42, in compliance with NEC Article 384.15.

H. Circuit breakers shall be completely enclosed in a molded case of thermoset material. No internal aluminum parts shall be used. All internal ferrous parts shall be plated to prevent corrosion.

I. All terminals shall be listed for use with copper or aluminum conductors. Terminals shall be of the box lug or clamp type design. The terminals shall meet UL 486B requirements and shall be suitable for use with either 60 °C or 75 °C wire.

J. The calibrated bimetal assembly shall be mechanically isolated from the load terminal using a flexible braided copper shunt wire, such that movement of the terminals due to twisting and overtorquing does not affect breaker calibration.

K. Breakers shall be SWD rated and/or HACR rated as required.

L. Arc Fault Interrupting circuit breakers, (AFI), shall be provided on all 15 and 20 A single-phase 120/240 Vac circuits except those indicated as remote controlled breakers. AFI breakers shall be "Classified for mitigating the effects of arcing faults," or conforming to UL Standard 1699 and as defined by Article 210.12 Section A of the 1999 NEC Code.

**Surge Protection Devices**

See Volume 1, Tab 2 for complete details on surge protection.

**Enclosures**

A. Loadcenter shall have NEMA Type 1 general purpose or NEMA Type 3R rainproof enclosures as indicated on the drawings and shall be surface or combination flush/surface mounted except where noted.

B. Boxes shall be made from galvanized sheet steel having multiple knockouts. Rainproof boxes shall use galvanized steel or an approved coating system which meets or exceeds standards for outdoor NEMA Type 3R enclosures. Boxes shall be of sufficient size to provide at least a minimum code gutter space on all sides.

C. The deadfront shall have an easy adjustment feature for flush applications.

D. Boxes shall be factory assembled into a single rigid structure.

E. Unless otherwise noted on drawings, hinged doors covering all circuit breaker handles shall be included in all trims. Trim doors shall not uncover any live parts in making the circuit breaker handles accessible. If key locks are required, all locks shall be keyed alike.

F. Combination trims for flush and surface panels shall be flat and shall overlap the box by at least 5/8-inch (15.9 mm) all around. Trims shall be mounted by a screwdriver without the need for special tools.

**Finish**

A. Trims shall be bonderized and finished with a light gray ANSI-61 enamel. The paint finish shall be of a type to which field applied paint will adhere.

**Factory Testing**

A. The standard factory tests shall be performed on the equipment provided under this section. All tests shall be in accordance with the latest version of UL and NEMA.

Type BR Retrofit Interior

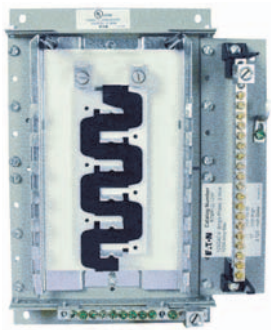

*Type BR Retrofit Adjustable Interior*

*Type BR Retrofit Interior Collar and Assembly with Trim*

## Contents—BR Specialty Products


| *Description* | *Page* |
|---|---|
| Overview | V1-T1-42 |
| BR Specialty Products | |
| BR Quick Connect Neutral Loadcenters | V1-T1-57 |
| Spa Panels | V1-T1-58 |
| Riser Panel | V1-T1-59 |
| Type BR Renovation Loadcenter | V1-T1-60 |
| Type BR Mechanical Interlock Kits | V1-T1-62 |
| Type BR Retrofit Interior Kits | |
| BR Circuit Breakers | V1-T1-76 |


## Type BR Retrofit Interior Kits

### Product Description

Eaton's unique Retrofit Interior allows the customer to cost-effectively and safely upgrade an electrical service without removing the existing enclosure from the wall.

***Quick-Pro℠***

All you need to know to save time and make more money. Specified on certain Eaton products, the Quick-Pro symbol allows for immediate recognition of products that are designed for straightforward installation. When you see Quick-Pro, you know you can install quickly—sometimes up to 50% less than the usual installation time—and move on to your next job.

### Application Description

The Retrofit Interior is designed and tested specifically for renovating an outdated electrical panel in an apartment, a condominium or a single family home. These outdated panels are being recognized by local inspectors and other authorities as a possible hazard.

***Opportunities to Retrofit***

- Single- or three-phase
- Main lug only or main breaker
- Up to 42 circuits
- Up to 225 A interiors, 400 A available upon request
- Available with CH breakers (3/4-inch) with copper bus or BR breakers (1-inch) with aluminum bus
- The minimum lifetime warranty for residential breakers shall be as follows:
  - 10-year warranty on all BR branch breakers and loadcenters
  - Refer to Eaton for complete warranty details

### Features and Benefits

***Upgrading Existing Electrical Infrastructure Is Simple***

- Replaces vintage brands that have hard to find, expensive replacement breakers
- Safety upgrade to arc fault and ground fault breakers to meet current electrical codes
- Maximizes number of circuits available with compact design
- Eco-friendly in asbestos-filled environments
- Exclusive design

***Save Time and Money Throughout the Installation***

- Uses existing panel box and wires
- Eliminates expensive and time-consuming drywall/paint repair
- Saves 2–3 hours of installation time compared to a complete panel changeout
- Eliminates precise measurements with field-adjustable kit

***Detailed Product Guide***

All standard retrofit kits are suitable for a range of existing box sizes:

- Box width ranging from 14.50 to 22.00 inches (368.3 to 558.8 mm)
- Box depth ranging from 4.00 inches (101.6 mm) for BR
- Box height ranging from 21.00 to 45.00 inches (533.4 to 1143.0 mm)

For box dimensions outside of these ranges, contact the Lincoln Flex Center at 800-330-6479. Be sure to provide the existing incoming line wire size.

### Standards and Certifications

- Meets 2008/2011/2014 NEC wire bending requirements
- UL 67 Listed (for UL listings for specific part numbers, see the table on the following page.

1

## BR Specialty Product Selection

To select the retrofit kit:

1. From the existing box size determine which retrofit groups are suitable (may be more than one).
2. Use type of interior, number of phases, and type of main to find the selection chart.
3. Select part number from chart (if main breaker, replace XXX with specific amp rating).
4. Note that the overlap of the existing wall is the retro cover size minus the existing box size. If specific measurements are needed, communicate that you need a custom trim size.
5. Contact the Lincoln Flex Center at 800-330-6479 for pricing, lead-times, and order entry instructions.

***How to Order:***

1. Measure the existing panel enclosure to determine appropriate kits for your project.
2. Match the existing dimensions with the table below to obtain the correct catalog number.
3. Order your retrofit kit from a local Eaton authorized distributor.

Need assistance or can't find retrofit to fit existing enclosure?

Call Eaton's Residential Flex Center at 1-800-330-6479 or email for all your retrofit needs. Go to www.eaton.com/eccn to locate an Eaton Certified Contractor.

### Retrofit Interior Kit Specifications

Five recommended groups: existing box height determines retro group size. Approximate Dimensions in Inches (mm).

| | | Existing Enclosure Parameters—Inches (mm) | | | | | | | | | |
|---|---|---|---|---|---|---|---|---|---|---|---|
| **Catalog Number ①** | **Cover ②** | **Minimum Depth** | **Maximum Depth** | **Minimum Width** | **Minimum Height** | **Phase** | **Main** | **Bus** | **Amperes ③** | **Spaces / Circuits** | **UL 67 Listed** |
| **BR Retrofit Interiors and Covers** | | | | | | | | | | | |
| **RTBR8L100P** | **CRTBR8ML****** | 3.13 (79.5) | 3.63 (92.2) | 10.50 (266.7) | 13.00 (330.2) | Single | MLO | BR | 100 | 16 | Yes |
| **RUBR8L100_** | **CRUBR8ML****** | 3.75 (95.3) | 6.00 (152.4) | 10.50 (266.7) | 13.00 (330.2) | Single | MLO | BR | 100 | 16 | Yes |
| **RTBR12L100P** | **CRTBR12ML****** | 3.13 (79.5) | 3.63 (92.2) | 10.50 (266.7) | 14.50 (368.3) | Single | MLO | BR | 100 | 24 | Yes |
| **RTBR10B100P** | **CRTBR12ML****** | 3.13 (79.5) | 3.63 (92.2) | 10.50 (266.7) | 14.50 (368.3) | Single | MLO | BR | 100 | 20 | Yes |
| **RUBR12L100_** | **CRUBR12ML****** | 3.75 (95.3) | 6.00 (152.4) | 10.50 (266.7) | 14.50 (368.3) | Single | MLO | BR | 100 | 24 | Yes |
| **RUBR10B100_** | **CRUBR12ML****** | 3.75 (95.3) | 6.00 (152.4) | 10.50 (266.7) | 14.50 (368.3) | Single | MB | BR | 100 | 20 | Yes |
| **RTBR12L125P** | **CRTBR12ML****** | 3.13 (79.5) | 3.63 (92.2) | 11.00 (279.4) | 17.00 (431.8) | Single | MLO | BR | 125 | 24 | Yes |
| **RTBR10B125P** | **CRTBR12ML****** | 3.13 (79.5) | 3.63 (92.2) | 11.00 (279.4) | 17.00 (431.8) | Single | MB | BR | 125 | 20 | Yes |
| **RUBR12L125_** | **CRUBR12ML****** | 3.75 (95.3) | 6.00 (152.4) | 11.00 (279.4) | 17.00 (431.8) | Single | MLO | BR | 125 | 24 | Yes |
| **RUBR10B125_** | **CRUBR12ML****** | 3.75 (95.3) | 6.00 (152.4) | 11.00 (279.4) | 17.00 (431.8) | Single | MB | BR | 125 | 20 | Yes |
| **RABR20B125_** | **CRABR20ML****** | 3.75 (95.3) | 6.00 (152.4) | 13.00 (330.2) | 21.00 (533.4) | Single | MCB | BR | 125 | 24 | No |
| **RABR20L125_** | **CRABR20ML****** | 3.75 (95.3) | 6.00 (152.4) | 13.00 (330.2) | 21.00 (533.4) | Single | MLO | BR | 125 | 24 | No |
| **RBBR20B200_** | **CRBBR20BW****** | 3.75 (95.3) | 6.00 (152.4) | 13.00 (330.2) | 29.00 (736.6) | Single | MLO | BR | 200 | 40 | No |
| **RCBR40L200_** | **CRCBR40ML****** | 3.75 (95.3) | 6.00 (152.4) | 13.00 (330.2) | 34.00 (863.6) | Single | MLO | BR | 200 | 40 | No |
| **RDBR40B200_** | **CRDBR40BW****** | 3.75 (95.3) | 6.00 (152.4) | 13.00 (330.2) | 37.00 (939.8) | Single | MLO | BR | 200 | 40 | No |

***Notes***

① Catalog numbers shown with "_" at the end need one of the following suffixes to denote depth:
J = 3.75–4.25
K = 4.25–5.00
L = 5.00–6.00
Example: RTBR12L125J would signify an interior set with a depth range of 3.75 to 4.25 inches.

② ****Denotes characters in the catalog number that relate to overall cover size.
Example: CRTBR12ML2620 would signify a cover 26.00 inches H x 20.00 inches W.

③ Amperes for MB panels is maximum; catalog number will reflect actual amperage of breaker included.

For UL applications, maximum cover sizes may apply.

***Complete Assembly***

**Note:** For complete assembly, interior and cover need to be ordered separately.

### Adjustable Interior

- Factory installed ground and neutral bars positioned to accept existing wires
- Field adjustable depth matches existing panel box
- Adjustable height enables optional placement of the interior
- Field bondable for service entrance options

***Adjustable Interior***

### Standard Trim and Collar

- Standard trim matches new interior
- New circuit directory for updated labeling
- Oversized collar eliminates expensive wall/paint repair

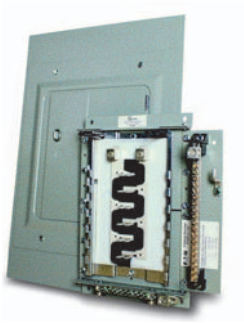

***Collar and Assembly with Trim***

BR Circuit Breakers

## Contents


| *Description* | *Page* |
|---|---|
| Overview | **V1-T1-42** |
| BR Specialty Products | |
| BR Quick Connect Neutral Loadcenters | **V1-T1-57** |
| Spa Panels | **V1-T1-58** |
| Riser Panel | **V1-T1-59** |
| Type BR Renovation Loadcenter | **V1-T1-60** |
| Type BR Mechanical Interlock Kits | **V1-T1-62** |
| Type BR Retrofit Interior Kits | **V1-T1-73** |
| BR Circuit Breakers | |
| Product Selection | **V1-T1-77** |
| Circuit Breaker Accessories | **V1-T1-85** |
| Wiring Diagrams | **V1-T1-87** |


## BR Circuit Breakers

### Product Description

***Plug-On Branch Feeder Type Arc Fault Circuit Breakers, Type BR—10 kAIC, 120 Vac and 120/240 Vac***

A branch feeder type arc fault circuit interrupter is a device intended to mitigate high current arcing faults in the complete circuit, including connected cords. High current arcing faults can occur from line to neutral or line to ground. These arcing faults are in parallel with the load and produce the most energy of all arcing faults.

The branch feeder type AFCI is required in the 1999 and 2002 National Electrical Code.

The Combination Type AFCI is required in the 2005, 2008, and 2011 National Electrical Code.

***Plug-On Combination Type Arc Fault Circuit Breakers, Type BR—10 kAIC, 120 Vac and 120/240 Vac***

A combination type arc fault circuit interrupter is a device that includes all of the protection offered by the branch feeder AFCI (mitigation of high current arcing faults in the complete circuit, including connected cords). In addition it provides direct detection of persistent low current arcing faults down to 5 amps with associated mitigation of fire hazards in the cords connected to the outlets. High current arcing faults can occur from line to neutral or line to ground. These arcing faults are in parallel with the load and produce the most energy of all arcing faults. The current level of low current arcing faults is limited by the load.

***Plug-On Ground Fault Circuit Breakers, Type GFCB and GFEP—10/22 kAIC, 120 Vac and 120/240 Vac***

**Ground Fault Application Notes**

Single-pole GFCBs are designed for use in two-wire, 120 Vac circuits. See **Page V1-T1-87** for a typical wiring configuration.

Two-pole GFCBs are designed for use in three-wire, 120/240 Vac circuits, 120 Vac multiwire circuits employing common, neutral and two-wire, 240 Vac circuits obtained from a 120/240 Vac source.

**Page V1-T1-87** shows typical wiring configurations for a 120/240 Vac multiwire circuits, and a 240 Vac, two-wire circuit. Note the "panel neutral" conductor connects to the neutral bar, even though the neutral is not included in the load circuit. This connection is necessary to supply a 120 Vac power source to the ground fault sensing circuit.

The figures are shown with a 120/240 Vac, single-phase, three-wire power source, but are also applicable to a 120/208 Vac, three-phase, four-wire power supply. For all figures, the electrical operation of the GFCB is not affected by the equipment ground.

***Non-CTL Plug-On Replacement —Circuit Breakers, Type BRD—10 kAIC, 120/240 Vac***

**Non-CTL 10 kAIC for Replacement Purposes Only**

For replacement in enclosures manufactured prior to 1968 with unnotched stabs. Circuit breakers do not have rejection tab.

## Product Selection

***Plug-On Circuit Breakers, Types BR—10/22/42 kAIC, 120 Vac, 120/240 Vac and 240 Vac***

**BR120**

**BR215**

**BR320**

**BRH2100**

**BRX2125**

### Type BR Breakers, 1-Inch (25.4 mm) per Pole 120/240, 10, 22 and 42 kAIC

| | | Single-Pole 120/240 Vac Requires One 1-Inch (25.4 mm) Space | | Two-Pole 120/240 Vac Common Trip Requires Two 1-Inch (25.4 mm) Spaces | | | |
|---|---|---|---|---|---|---|---|
| | | 10 per Shelf Carton | | 5 per Shelf Carton | | | |
| | | 10 kAIC | 22 kAIC | 10 kAIC | 22 kAIC | 42 kAIC | 65 kAIC |
| Ampere Rating | Wire Size Range Cu/Al 60 °C or 75 °C | Catalog Number | Catalog Number | Catalog Number | Catalog Number | Catalog Number | Catalog Number |
| 10 | #14–4 | **BR110** | — | **BR210** | — | — | — |
| 15 | #14–4 | **BR115** ①② | **BRH115** | **BR215** ③ | **BRH215** | — | — |
| 20 | #14–4 | **BR120** ①② | **BRH120** | **BR220** ③ | **BRH220** | — | — |
| 25 | #14–4 | **BR125** | **BRH125** | **BR225** ③ | **BRH225** | — | — |
| 30 | #14–4 | **BR130** | **BRH130** | **BR230** ③ | **BRH230** | — | — |
| 35 | #14–4 | **BR135** | **BRH135** | **BR235** ③ | **BRH235** | — | — |
| 40 | #14–4 | **BR140** | **BRH140** | **BR240** ③ | **BRH240** ③ | — | — |
| 45 | #14–4 | — | **BRH145** | **BR245** ③ | **BRH245** | — | — |
| 50 | #14–4 | **BR150** | **BRH150** | **BR250** ③ | **BRH250** ③ | — | — |
| 55 | #14–3 | **BR150** | **BRH155** | **BR255** | **BRH255** | — | — |
| 60 | #8–1/0 | **BR160** | **BRH160** | **BR260** | **BRH260** | **BRHH260** | **BRX260** |
| 70 | #8–1/0 | **BR170** | **BRH170** | **BR270** | **BRH270** | **BRHH270** | **BRX270** |
| 80 | #8–1/0 | — | — | **BR280** | **BRH280** | **BRHH280** | **BRX280** |
| 90 | #8–1/0 | — | — | **BR290** | **BRH290** | **BRHH290** | **BRX290** |
| 100 | #8–1/0 | — | — | **BR2100** | **BRH2100** | **BRHH2100** | **BRX2100** |
| 110 | #8–1/0 | — | — | **BR2110** | **BRH2110** | **BRHH2110** | **BRX2110** |
| 125 | #4–2/0 | — | — | **BR2125** | **BRH2125** | **BRHH2125** | **BRX2125** |
| 150 | #4–2/0 | — | — | **BR2150** ④ | — | — | — |

***Notes***

① One pole, 1-inch (25.4 mm) per pole circuit breakers are available with high magnetic setting for switching large tungsten lamp loads. Add suffix H to catalog number.
② Switching duty rated.
③ On the black handle breaker, add suffix "B" to the catalog number to obtain a tapped molded opening for proper use with hold-down kits.
④ For use as a branch circuit breaker in 400 and 600 ampere panels only.

All Type BR single-, two- and three-pole circuit breakers carry listing for HACR application. For circuit breakers with a shunt trip, add ST suffix.

1

**BR Breakers**

## Type BR Breakers, 1-Inch (25.4 mm) per Pole 240 Vac, 10, 22 and 42 kAIC

| Ampere Rating | Wire Size Range Cu/Al 60 °C or 75 °C | Three-Pole 240 Vac Common Trip Requires Three 1-Inch (25.4 mm) Spaces<br>5 per Shelf Carton<br>10 kAIC<br>Catalog Number | <br>22 kAIC<br>Catalog Number |
|---|---|---|---|
| 10 | #14–4 | **BR310** | — |
| 15 | #14–4 | **BR315** ① | **BRH315** |
| 20 | #14–4 | **BR320** ① | **BRH320** |
| 25 | #14–4 | **BR325** | **BRH325** |
| 30 | #14–4 | **BR330** | **BRH330** |
| 35 | #14–4 | **BR335** | **BRH335** |
| 40 | #14–4 | **BR340** | **BRH340** |
| 45 | #14–4 | **BR345** | **BRH345** |
| 50 | #14–4 | **BR350** | **BRH350** |
| 55 | #14–3 | **BR355** | **BRH355** |
| 60 | #4–1/0 | **BR360** | **BRH360** |
| 70 | #4–1/0 | **BR370** | **BRH370** |
| 80 | #4–1/0 | **BR380** | **BRH380** |
| 90 | #4–1/0 | **BR390** | **BRH390** |
| 100 | #4–1/0 | **BR3100** | **BRH3100** |

***Plug-On Branch Feeder Type Arc Fault Circuit Breakers, Type BR—10 kAIC, 120 Vac and 120/240 Vac***

**Type BR AFCI Circuit Breaker**

## Type BR, 1-Inch (25.4 mm) Wide FIRE-GUARD AFCI Circuit Breakers

| Poles | Ampere Rating | Configuration | Catalog Number |
|---|---|---|---|
| Single-pole 10 kAIC | 15 | AFCI | **BR115AF** ② |
| | 20 | AFCI | **BR120AF** ② |
| Single-pole 22 kAIC | 15 | AFCI | **BRH115AF** |
| | 20 | AFCI | **BRH120AF** |
| Two-pole 10 kAIC ③④ | 15 | AFCI Common Trip | **BRL215AF** |
| | 20 | AFCI Common Trip | **BRL220AF** |

***Notes***

① One pole, 1-inch (25.4 mm) per pole circuit breakers are available with high magnetic setting for switching large tungsten lamp loads. Add suffix H to catalog number.

② Clamshell packaging available with CS modification code on the end of catalog number.

③ Common trip refers to two-pole 240 V load application sourced by 120/240 Vac (see **Page V1-T1-87**).

④ Independent trip refers to two-pole multi-wire, home run or shared neutral circuits (see **Pages V1-T1-87** and **V1-T1-88**).

All Type BR single-, two- and three-pole circuit breakers carry listing for HACR application. For circuit breakers with a shunt trip, add ST suffix.

### *Plug-On, Dual Purpose Arc Fault/ Ground Fault Circuit Breakers, Type BR—10 kAIC, 120 Vac*

**BRLAFGF115**

## Type BR, 1-Inch (25.4 mm) wide Dual Purpose AF/GF Circuit Breakers ①②

| Poles | Ampere Rating | Configuration | Catalog Number |
|---|---|---|---|
| Single-pole 10 kAIC | 15 | Combination AFCI GFCI | **BRLAFGF115** |
| | 20 | Combination AFCI GFCI | **BRLAFGF120** |

### *Plug-On Combination Type Arc Fault Circuit Breakers, Type BR—10 kAIC, 120 Vac and 120/240 Vac*

**BRCAF115**

## Type BR, 1-Inch (25.4 mm) wide FIRE-GUARD Combination Type AFCI Circuit Breakers

| Poles | Ampere Rating | Configuration | Catalog Number |
|---|---|---|---|
| Single-pole 10 kAIC | 15 | AFCI | **BRCAF115** ③ |
| | | Diagnostic AFCI | **BRACAF115** |
| | 20 | AFCI | **BRCAF120** ③ |
| | | Diagnostic AFCI | **BRACAF120** |
| Single-pole 22 kAIC | 15 | AFCI | **BRHCAF115** ③ |
| | 20 | AFCI | **BRHCAF120** ③ |
| Two-pole 10 kAIC | 15 | AFCI | **BRL215CAF** |
| | 20 | AFCI | **BRL220CAF** |

### *Plug-On Ground Fault Circuit Breakers, Type GFCB and GFEP—10/22 kAIC, 120 Vac and 120/240 Vac*

**Type GFCB Single-Pole**

**Type GFCB Two-Pole**

## Type GFCB Ground Fault Circuit Breakers—5 Milliampere—1-Inch (25.4 mm) per Pole 120 Vac or 120/240 Vac, 10 kAIC

| Ampere Rating | Wire Size Range Cu/Al 60 °C or 75 °C | 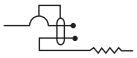 Single-Pole 120 Vac Requires One 1-Inch (25.4 mm) Space 1 per Shelf Carton Catalog Number ④ | Two-Pole 120/240 Vac Common Trip Requires Two 1-Inch (25.4 mm) Spaces 1 per Shelf Carton Catalog Number |
|---|---|---|---|
| 15 | #14–4 | **GFCB115** | **GFCB215** |
| 20 | #14–4 | **GFCB120** | **GFCB220** |
| 25 | #14–4 | **GFCB125** | **GFCB225** |
| 30 | #14–4 | **GFCB130** | **GFCB230** |
| 40 | #14–4 | **GFCB140** | **GFCB240** |
| 50 | #14–4 | — | **GFCB250** ⑤ |
| 60 | #14–6 | — | **GFCB260** |

***Notes***

① Breaker qualifies as combination arc fault, per UL 1699.
② Breaker qualifies as personnel protection ground fault, (5 mA) per UL 943.
③ Clamshell packaging available with CS modification code on the end of catalog number.
④ Available with bell alarm or auxiliary switch. See circuit breaker accessories on **Page V1-T1-85**.
⑤ For use with copper wire only.

## Type GFCBH Ground Fault Breakers—5 Milliampere—1-Inch (25.4 mm) per Pole 120 Vac or 120/240 Vac, 22 kAIC

| Ampere Rating | Wire Size Range Cu/Al 60 °C or 75 °C | 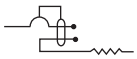 Single-Pole 120 Vac Requires One 1-Inch (25.4 mm) Space 1 per Shelf Carton Catalog Number | 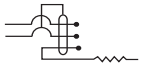 Two-Pole 120/240 Vac Common Trip Requires Two 1-Inch (25.4 mm) Spaces 1 per Shelf Carton Catalog Number |
|---|---|---|---|
| 15 | #14–4 | **GFCBH115** | **GFCBH215** |
| 20 | #14–4 | **GFCBH120** | **GFCBH220** |
| 25 | #14–4 | **GFCBH125** | **GFCBH225** |
| 30 | #14–4 | **GFCBH130** | **GFCBH230** |

## Type GFEP Ground Fault Equipment Protectors—30 Milliampere—1-Inch (25.4 mm) per Pole 120 Vac or 120/240 Vac, 10 kAIC

| Ampere Rating | Wire Size Range Cu/Al 60 °C or 75 °C | Single-Pole 120 Vac Requires One 1-Inch (25.4 mm) Space 1 per Shelf Carton Catalog Number | 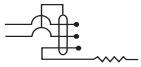 Two-Pole 120/240 Vac Common Trip Requires Two 1-Inch (25.4 mm) Space 1 per Shelf Carton Catalog Number |
|---|---|---|---|
| 15 | #14–4 | **GFEP115** | **GFEP215** |
| 20 | #14–4 | **GFEP120** | **GFEP220** |
| 25 | #14–4 | **GFEP125** | **GFEP225** |
| 30 | #14–4 | **GFEP130** | **GFEP230** |
| 40 | #14–4 | — | **GFEP240** |
| 50 | #14–4 | — | **GFEP250** ① |

***Note***

① For use with copper wire only.

### *CTL Plug-On Circuit Breakers, Type BD Duplex, BQ and BQC Quadplex—10 kAIC, 120/240 Vac*

**BD2020**

**BQ2302115**

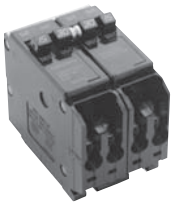

**BQ230230**

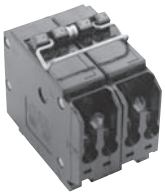

## Class CTL, 1-Inch (25.4 mm) per Pole 10 kAIC—All Circuit Breakers Have Rejection Tab Feature

| Type BD Duplex (UL Type BRD) | | | Type BQ Quadplex Independent Trip (UL Type BRD) | | | | Type BQ Quadplex Independent Trip (UL Type BRD) | | |
|---|---|---|---|---|---|---|---|---|---|
| 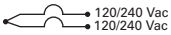  | | | 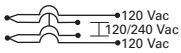  | | | | 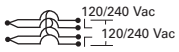  | | |
| **Single-Pole ①** **Requires One 1-Inch (25.4 mm) Space** **10 per Shelf Carton** | | | **Two-Pole ② and Single-Pole ①** **Requires Two 1-Inch (25.4 mm) Spaces** **5 per Shelf Carton** | | | | **Two-Pole** **Requires Two 1-Inch (25.4 mm) Spaces** **5 per Shelf Carton** | | |
| | **120 Vac** | **Wire Size Range** | **120 Vac** | **120/240 Vac** | **120 Vac** | | **120/240 Vac** | | |
| | | | **Ampere Rating** | | | | **Ampere Rating** | | |
| **Ampere Rating** | **Catalog Number** | **Cu/Al 65 °C or 75 °C** | **Outer Left Single-Pole** | **Center Two-Pole Independent Trip** | **Outer Right Single-Pole** | **Catalog Number** | **Outer Two-Pole Independent Trip** | **Center Two-Pole Independent Trip** | **Catalog Number** |
| 10–10 | **BD1010** | #14–4 | 15 | 20 | 15 | **BQ2202115** | 15 | 15 | **BQ215215** |
| 15–15 | **BD1515** | #14–4 | 20 | 20 | 20 | **BQ2202120** | 15 | 20 | **BQ215220** |
| 15–20 | **BD1520** | #14–4 | 15 | 30 | 15 | **BQ2302115** | 15 | 30 | **BQ215230** |
| 15–30 | **BD1530** | #14–4 | 20 | 30 | 20 | **BQ2302120** | 15 | 40 | **BQ215240** |
| 20–15 | **BD2015** | #14–4 | 15 | 40 | 15 | **BQ2402115** | 15 | 50 | **BQ215250** |
| 20–20 | **BD2020** | #14–4 | 20 | 40 | 20 | **BQ2402120** | 20 | 20 | **BQ220220** |
| 20–30 | **BD2030** | #14–4 | 15 | 50 | 15 | **BQ2502115** | 20 | 30 | **BQ220230** |
| 25–25 | **BD2525** | #14–4 | 20 | 50 | 20 | **BQ2502120** | 20 | 40 | **BQ220240** |
| 30–15 | **BD3015** | #14–4 | — | — | — | **—** | 20 | 50 | **BQ220250** |
| 30–20 | **BD3020** | #14–4 | — | — | — | **—** | 25 | 25 | **BQ225225** |
| 30–30 | **BD3030** | #14–4 | — | — | — | **—** | 30 | 30 | **BQ230230** |
| 30–40 | **BD3040** | #14–4 | — | — | — | **—** | 30 | 40 | **BQ230240** |
| 30–50 | **BD3050** | #14–4 | — | — | — | **—** | 30 | 50 | **BQ230250** |
| 50–30 | **BD5030** | #14–4 | — | — | — | **—** | 40 | 40 | **BQ240240** |
| 50–50 | **BD5050** | #14–4 | — | — | — | **—** | 40 | 50 | **BQ240250** |
| — | **—** | — | — | — | — | **—** | 50 | 50 | **BQ250250** |

***Notes***

① All 15 and 20 A single poles are switch-duty rated.

② All Type BD duplex and BQ quadplex circuit breakers carry listing for HACR applications.

1

***Non-CTL Plug-On Replacement—Circuit Breakers, Type BRD—10 kAIC, 120/240 Vac***

**BR2020**

## Class Non-CTL, 1-Inch (25.4 mm) per Pole 10 kAIC—Breakers Do Not Have Rejection Tab Feature

| Type BR Duplex | | | Type Brand BRD Quadplex Independent Trip | | | Type BRD Quadplex Common Trip Center and Outer Poles | | |
|---|---|---|---|---|---|---|---|---|
| 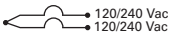  | | | 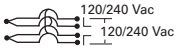  | | | 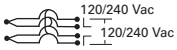  | | |
| **Single-Pole Requires One 1-Inch (25.4 mm) Space 10 per Shelf Carton** | | | **Two-Pole Requires Two 1-Inch (25.4 mm) Spaces 5 per Shelf Carton** | | | **Two-Pole Requires Two 1-Inch (25.4 mm) Spaces 5 per Shelf Carton** | | |
| | **120 Vac** | | **120/240 Vac** | **120/240 Vac** | | **120/240 Vac** | | |
| | | **Wire Size Range** | **Ampere Rating** | | | **Ampere Rating** | | |
| **Ampere Rating** | **Catalog Number** | **Cu/Al 65 °C or 75 °C** | **Outer Two-Pole Independent Trip** | **Center Two-Pole Independent Trip** | **Catalog Number** | **Outer Two-Pole Common Trip** | **Center Two-Pole Common Trip** | **Catalog Number** |
| 15–15 | **BR1515** | #14–4 | 15 | 15 | **BR415** | 15 | 15 | **BRDC215215** |
| 15–20 | **BR1520** | #14–4 | 20 | 20 | **BR420** | 30 | 30 | **BRDC230230** |
| 20–15 | **BR2015** | #14–4 | 30 | 30 | **BR430** | 30 | 40 | **BRDC230240** |
| 20–20 | **BR2020** | #14–4 | 20 | 30 | **BRD220230** | 30 | 50 | **BRDC230250** |
| 30–30 | **BR3030** | #14–4 | 30 | 40 | **BRD230240** | — | — | — |
| 30–50 | **BR3050** | #14–4 | 30 | 50 | **BRD230250** | — | — | — |

## CTL and Non-CTL Breakers

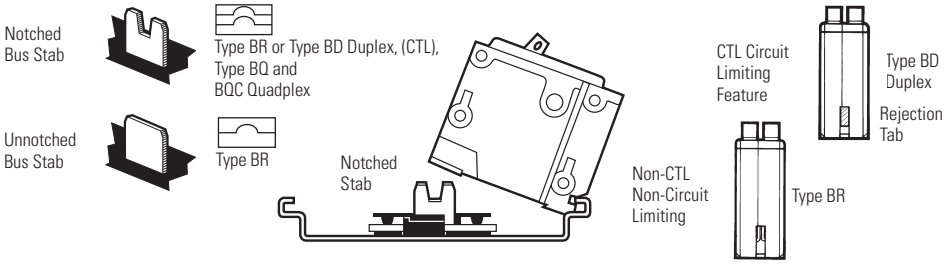


***Note***

Type BD Duplex, BQ and BQC Quadplex circuit breakers can be installed in Circuit Limiting (CTL) listed BR loadcenters. Type BR twin breakers can be installed in Non-CTL BR loadcenters.

### *Common Trip Quadplex Breakers*

**BQC2302115**

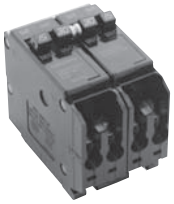

**BQC2302115**

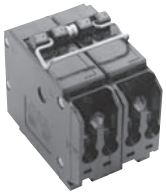

## Class CTL, 1-Inch (25.4 mm) per Pole 10 kAIC—All Circuit Breakers Have Rejection Tab Feature

**Type BQC Quadplex Common Trip Center Poles (UL Type BRD)**

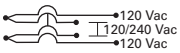


**Two-Pole ① and Single-Pole ②**
**Requires Two 1-Inch (25.4 mm) Spaces**
**5 per Shelf Carton**

**Type BQC Quadplex Common Trip Center and Outer Poles (UL Type BRD)**

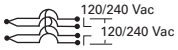


**Two-Pole ①**
**Requires Two 1-Inch (25.4 mm) Spaces**
**5 per Shelf Carton**

| 120 Vac Ampere Rating Outer Left Single-Pole | 120/240 Vac Center Two-Pole Common Trip | 120 Vac Outer Right Single-Pole | Catalog Number | Wire Size Range Cu/Al 65 °C or 75 °C | 120/240 Vac Ampere Rating Outer Two-Pole Common Trip | Center Two-Pole Common Trip | Catalog Number |
|---|---|---|---|---|---|---|---|
| 15 | 20 | 15 | **BQC2202115** | #14–4 | 15 | 15 | **BQC215215** |
| 15 | 25 | 15 | **BQC2252115** | #14–4 | 15 | 20 | **BQC215220** |
| 15 | 30 | 15 | **BQC2302115** | #14–4 | 15 | 30 | **BQC215230** |
| 15 | 40 | 15 | **BQC2402115** | #14–4 | 20 | 15 | **BQC220215** |
| 15 | 50 | 15 | **BQC2502115** | #14–4 | 20 | 20 | **BQC220220** |
| — | — | — | — | #14–4 | 20 | 30 | **BQC220230** |
| — | — | — | — | #14–4 | 20 | 40 | **BQC220240** |
| — | — | — | — | #14–4 | 20 | 50 | **BQC220250** |
| 20 | 15 | 20 | **BQC2152120** | #14–4 | 25 | 25 | **BQC225225** |
| 20 | 20 | 20 | **BQC2202120** | #14–4 | 25 | 30 | **BQC225230** |
| 20 | 25 | 20 | **BQC2252120** | #14–4 | 30 | 15 | **BQC230215** |
| 20 | 30 | 20 | **BQC2302120** | #14–4 | 30 | 30 | **BQC230230** |
| 20 | 40 | 20 | **BQC2402120** | #14–4 | 30 | 40 | **BQC230240** |
| 20 | 50 | 20 | **BQC2502120** | #14–4 | 30 | 50 | **BQC230250** |
| 30 | 50 | 20 | **BQC2502030** | #14–4 | 40 | 30 | **BQC240230** |
| — | — | — | — | #14–4 | 40 | 40 | **BQC240240** |
| — | — | — | — | #14–4 | 40 | 50 | **BQC240250** |
| — | — | — | — | #14–4 | 50 | 20 | **BQC250220** |
| — | — | — | — | #14–4 | 50 | 50 | **BQC250250** |

***Notes***

① All Type BQC quadplex circuit breakers carry listing for HACR applications.
② All 15 and 20 ampere single poles are switch-duty rated.

1

### *Plug-On Circuit Breakers, Types BJ and BJH—10/22 kAIC, 120/240 Vac and 240 Vac*

For Use in Single-Phase and Three-Phase Loadcenters—150 Amperes and Above

**Type BJ**

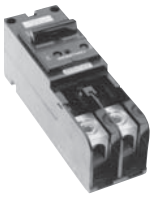

## Types BJ and BJH Breakers, 1-Inch (25.4 mm) per Pole, 120/240 or 240 Vac, 10, 22 kAIC

| | Two-Pole 120/240 Vac Common Trip Requires Four 1-Inch (25.4 mm) Spaces ① 10 per Shelf Carton | | | Three-Pole 240 Vac Common Trip Requires Six 1-Inch (25.4 mm) Spaces ② 5 per Shelf Carton | |
|---|---|---|---|---|---|
| **Ampere Rating** | **10 kAIC Catalog Number** | **22 kAIC Catalog Number** | **Wire Size Range Cu/Al 60 °C or 75 °C** | **10 kAIC Catalog Number** | **22 kAIC Catalog Number** |
| 125 | **BJ2125** | **BJH2125** | #2–300 kcmil | **BJ3125** | **BJH3125** |
| 150 | **BJ2150** | **BJH2150** | #2–300 kcmil | **BJ3150** | **BJH3150** |
| 175 | **BJ2175** | **BJH2175** | #2–300 kcmil | **BJ3175** | **BJH3175** |
| 200 | **BJ2200** | **BJH2200** | #2–300 kcmil | **BJ3200** | **BJH3200** |
| 225 | **BJ2225** | **BJH2225** | #2–300 kcmil | **BJ3225** | **BJH3225** |

### *Plug-On Special Application Circuit Breakers—10 kAIC, 120 Vac, 120/240 Vac and 240 Vac*

**BRWH215**
**Water Heater Breaker**

**BRSN220**
**Switching Neutral Breaker**

## Special Application Circuit Breakers, 1-Inch (25.4 mm) per Pole

| Water Heater Breakers | | Switching Neutral Breakers | | | 240 V Breakers | | Non-Automatic Molded Case Switches | |
|---|---|---|---|---|---|---|---|---|
| LINE / LOAD | | OUT / IN / NEUTRAL | | | | | | |
| Two-Pole 120/240 Vac Common Trip Requires Two 1-Inch (25.4 mm) Spaces With Isolated Line Terminals for Separately Metered Water Heaters 5 per Shelf Carton 10 kAIC | | Two-Pole 120 Vac Common Trip Requires Two 1-Inch (25.4 mm) Spaces With Switching Neutral Pole for Gasoline Pump Applications 5 per Shelf Carton 10 kAIC | | | Two-Pole 240 Vac Common Trip Requires Two 1-Inch (25.4 mm) Spaces Where Voltage to Ground is 240 Vac 5 per Shelf Carton 10 kAIC | | Two-Pole 240 Vac Requires Two 1-Inch (25.4 mm) Spaces For Use as Disconnect Contains No Magnetic or Thermal Trip Properties 5 per Shelf Carton 5 kAIC | |
| **Ampere Rating** | **Catalog Number** | **Ampere Rating** | **Catalog Number** | **Wire Size Range Cu/Al 60 °C or 75 °C** | **Ampere Rating** | **Catalog Number** | **Ampere Rating** | **Catalog Number** |
| 15 | **BRWH215** | 15 | **BRSN215** | #14–4 | 10 | **BR210H** | — | — |
| 20 | **BRWH220** | 20 | **BRSN220** | #14–4 | 15 | **BR215H** | — | — |
| 30 | **BRWH230** | 25 | **BRSN225** | #14–4 | 20 | **BR220H** | — | — |
| — | — | 30 | **BRSN230** | #14–4 | 25 | **BR225H** | — | — |
| — | — | — | — | #14–4 | 30 | **BR230H** | — | — |
| — | — | — | — | #14–4 | 35 | **BR235H** | — | — |
| — | — | — | — | #14–4 | 40 | **BR240H** | — | — |
| — | — | — | — | #14–4 | 45 | **BR245H** | — | — |
| — | — | — | — | #14–4 | 50 | **BR250H** | 50 | **BR250NA** |
| — | — | — | — | #14–4 | 55 | **BR255H** | — | — |
| — | — | — | — | #4–1/0 | 60 | **BR260H** | 60 | **BR260NA** |
| — | — | — | — | #4–1/0 | 70 | **BR270H** | — | — |
| — | — | — | — | #4–1/0 | 80 | **BR280H** | — | — |
| — | — | — | — | #4–1/0 | 90 | **BR290H** | — | — |
| — | — | — | — | #4–1/0 | 100 | **BR2100H** | 100 | **BR2100NA** |

***Notes***

① Breaker uses two 1-inch (25.4 mm) pole spaces on left side and two 1-inch (25.4 mm) pole spaces on right side of loadcenter.

② Breaker uses three 1-inch (25.4 mm) pole spaces on left side and three 1-inch (25.4 mm) pole spaces on right side of loadcenter.

If BJ or BJH breakers are used as a main or a back feed device, a hold-down kit is required. See **Page V1-T1-85**.

## Circuit Breaker Accessories

THS1

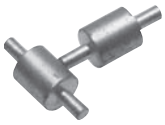

BHLW2

BRQLW

MCBPL (Installed)

BHLW

BRLW2

BREQS125

BRHDK125

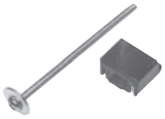

### Field Installation Kits and Parts

| Description | Ordering Quantity ① | Catalog Number |
|---|---|---|
| **Handle Ties ②** | | |
| Handle tie bar for physically joining the handles of two adjacent single-pole Type BR circuit breakers (metal cylinder pin type) | 10 | **BHT** |
| Handle tie bar for joining two independent outside poles of Types BQ and BQC Quadplex and outside poles of two Type BD duplex circuit breakers | 10 | **THOW** |
| Handle tie bar for joining two adjacent outside poles of Types BQ and BQC Quadplex and outside poles of two Type BD duplex circuit breakers | 10 | **THS1** |
| **Handle Lockoffs ③④** | | |
| Padlockable device for locking the handle of single-, two- or three-pole Type BR Circuit Breakers and single-pole of a Type BD Duplex or one independent outside pole of a Type BQ or BQC Quadplex circuit breakers (escutcheon mounted) ⑤ | 10 | **BRLW** |
| Padlockable device for locking the handle of a single-pole Type BR circuit breaker (handle mounted) ⑥ | 10 | **BRLW1** |
| Padlockable device for locking the handle of a two- and three-pole Type BR circuit breaker (handle mounted) ⑥ | 10 | **BRLW2** |
| Padlockable device for locking the handle of a single-pole Type BD Duplex, BQ or BQC Quadplex breaker (handle mounted) ⑥ | 10 | **BRDL1** |
| Padlockable device for locking the handle of the two center poles and the two outer poles of a two-pole Types BQ and BQC quadplex circuit breakers (escutcheon mounted) ⑤ | 10 | **BRQLW** |
| Padlockable device for locking the handle of main circuit breaker Types CC and CHH into the ON or OFF position (screw mounted) ⑦ | 1 | **CCPL** |
| Padlockable device for locking the handle of main breaker Types BW and CSR into the ON or OFF position (escutcheon mounted) ⑤ | 1 | **MCBPL** |
| Device used to secure handle in ON or OFF position for single-, two- or three-pole Type BR circuit breakers and single-pole of Type BD duplex and one independent outside pole of Type BQ or BQC Quadplex circuit breakers (escutcheon mounted) ⑤ | 10 | **BHLW** |
| Device used to secure handle in ON or OFF position for single-pole Type BR circuit breakers (handle mounted) ⑥ | 10 | **BHLW1** |
| Device used to secure handle in ON or OFF position for two- and three-pole Type BR circuit breakers (handle mounted) ⑥ | 10 | **BHLW2** |
| Device used to secure handle in ON or OFF position for single-pole Type GFCB ground fault circuit breakers (handle mounted) ⑥ | 10 | **BHGW** |
| Device used to secure handle in ON or OFF position for one independent outside pole of Types BQ and BQC Quadplex or single-pole Type BD duplex circuit breakers (handle mounted) ⑥ | 10 | **HLW1** |
| **Hold-Down Kits ⑧** | | |
| Hold-down retainer kit for three-pole Type BR circuit breakers in S3100 and 3100R loadcenters only | 1 | **BRHDB** |
| Hold-down screw kit for two- and three-pole Type BR circuit breakers in single-phase MLO loadcenters through 100–125 A | 1 | **BREQS125** |
| Hold-down screw kit for two- and three-pole Type BR circuit breakers in MLO loadcenters 150–225 A | 1 | **BRHDK125** |
| Hold-down screw kit for two-pole Types BJ and BJH circuit breakers in MLO loadcenters 125–225 A | 1 | **BJHDS** |
| Hold-down screw kit for three-pole Types BJ and BJH circuit breakers in MLO loadcenters 125–225 A | 1 | **BJHDS3P** |
| **Main Breaker Lug Kits** | | |
| Types CC and CHH main breaker lug kit (2) 300 kcmil | 1 | **CCL300** |
| Types BW/CSR main breaker lug kit (2) 300 kcmil | 1 | **MCBL300** |

***Notes***

① Must be purchased in multiples of ordering quantities indicated.
② Handle ties: typically used to join two similar independent single-pole breakers to form a two-pole noncommon trip breaker.
③ Handle lockoffs: devices that use a padlock to lock the circuit breaker's handle in the ON or OFF position.
④ See table on **Page V1-T1-86** for handle position changeability chart.
⑤ Escutcheon mounted: device mounted semipermanently to the face of the circuit breaker and secured by the loadcenter deadfront.
⑥ Handle mounted: device mounted directly to the handle by the use of a set screw.
⑦ Screw mounted: device permanently mounted to the face of the circuit breaker by the use of a non-removable screw.
⑧ Hold-down kits: devices used to secure the circuit breaker to the loadcenter for back-feed main application. See NEC Article 384.16(g). Add "B" suffix to two-pole breaker for tapped hole for hold-down kit (ex. BR230B) for BR breakers below 60 A.

BRML

## Field Installation Kits and Parts, continued

| Description | Ordering Quantity ① | Catalog Number |
|---|---|---|
| **Mechanical Interlocks** | | |
| Types BR for two-, three- and four-pole breakers | 10 | **BRML** |
| **Padlock Brackets** | | |
| BR padlock mounting bracket | 10 | **BRPLOFF** |
| BR three-pole lock-off bracket | 10 | **BRPLOFF3P** |
| BJ two-pole lock-off bracket | 10 | **BJL2P** |
| BJ three-pole lock-off bracket | 10 | **BJL3P** |

## Shunt Trips, Auxiliary and Alarm Contacts

| Description | Catalog Number ② Suffix Adder |
|---|---|
| **Shunt Trip for Types BW/CSR** | |
| 12 Volts | **SR12** |
| 24 Volts | **SR24** |
| 120 Volts | **SR01** |
| **Shunt Trip for Types BR** | |
| 120 Volts | **ST** |
| **Auxiliary Contact for Types BW/CSR** | |
| 1NO and 1NC | **AL1** |
| 2NO and 2NC | **AL2** |
| **Alarm Contacts for Types BW/CSR** | |
| Types BW/CSR | **CR1** |
| **Alarm Contacts for Type GFCB (Single-Pole)** | |
| Alarm contact for GFCB (single-pole) | **W1** |
| 1NO and 1NC | **W2** |

## Handle Position Changeability Chart

| | To Change Handle Position from ON to OFF, or OFF to ON You Must... | | |
|---|---|---|---|
| **Handle Lockoff and Lockdog Types** | **Remove Padlock** | **Remove Device** | **Remove Loadcenter Deadfront** |
| Lockoff escutcheon mounted | Remove | — | — |
| Lockoff handle mounted | Remove | Remove | — |
| Lockoff screw mounted | Remove | — | — |
| Lockdog escutcheon mounted | N/A | Remove | Remove |
| Lockdog handle mounted | N/A | Remove | — |

***Notes***

① Must be purchased in multiples of ordering quantities indicated.

② Add suffix indicated to end of breaker catalog number.

## Wiring Diagrams

### Single-Pole 120 V Load Application Sourced by 120/240 Vac

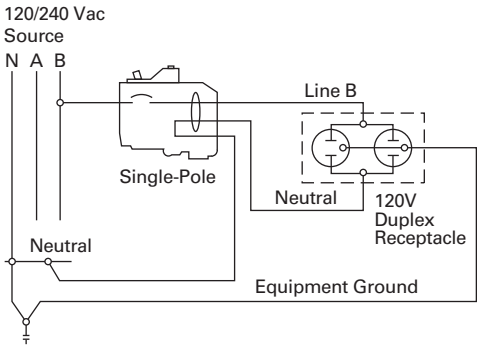


### Two-Pole Shared Neutral with Duplex Receptacle Application

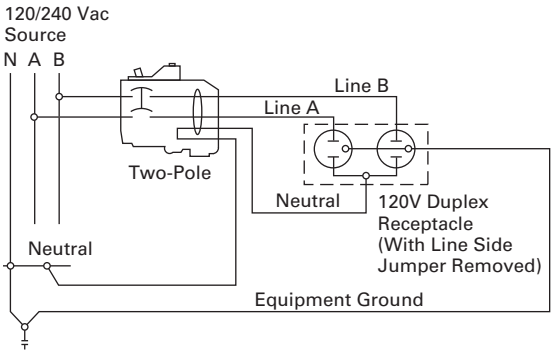


### Two-Pole Shared Neutral with Multi-Duplex Receptacle Application

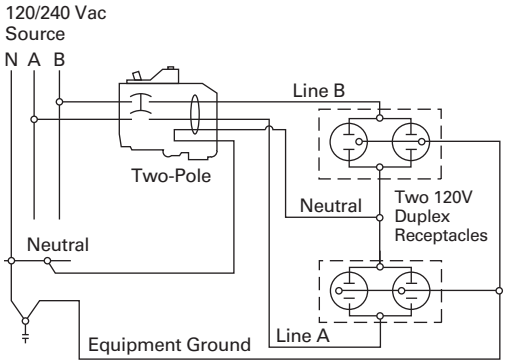


### Single-Pole 120 V Load Application Sourced by 120/240 Vac

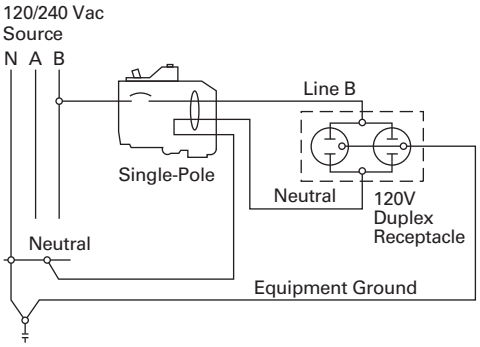


### Two-Pole 240 V Load Application Sourced by 120/240 Vac

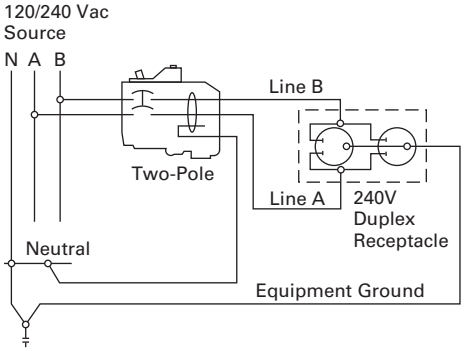


### Single-Pole 120 V Duplex Receptacle Application

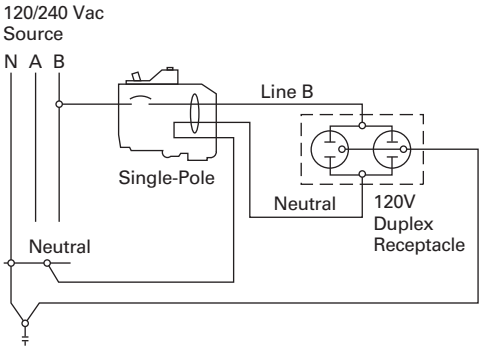

### Two-Pole 120 V Multi-Duplex Receptacle Application

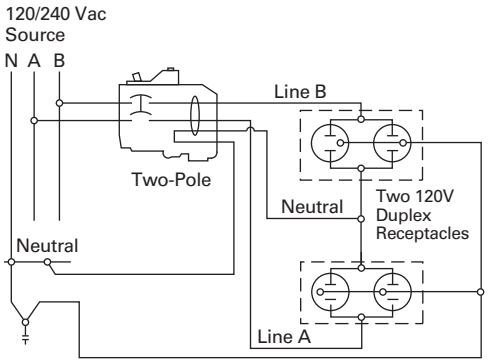


### Two-Pole 120 V Duplex Receptacle Application

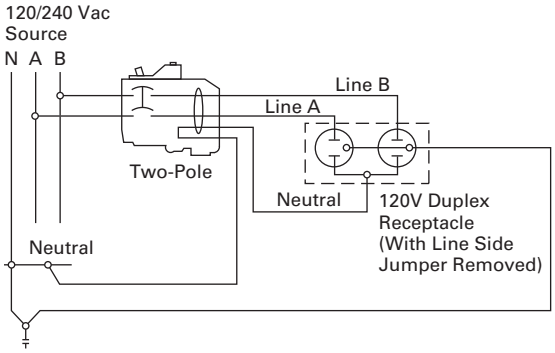


### Two-Pole 240 V Duplex Receptacle Application

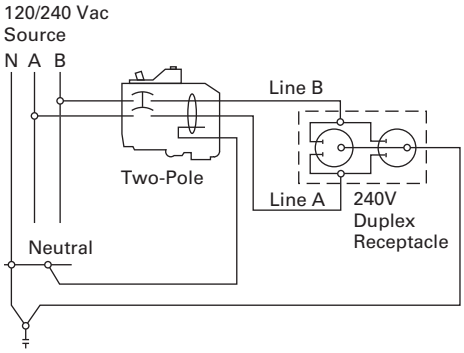

OEM Loadcenters

## Contents


| *Description* | *Page* |
|---|---|
| Standards and Certifications | **V1-T1-90** |
| Product Selection | **V1-T1-90** |


## Product Description

As a leader in the electrical distribution equipment business, Eaton has a unique product offering for equipment manufacturers, panel builders and virtually any OEM that has a need for power distribution within their equipment. The OEM interior offering consists of a wide variety of power distribution options utilizing components from Eaton's CH and BR loadcenter product lines. With high-volume, standardized products, OEMs can expect to receive high-quality products covering configurations meeting virtually any power distribution need.

Coupled with Eaton's expertise in circuit breaker design and manufacturing, OEM interiors provide solid power distribution and circuit protection in a compact, easy-to-install package. Interiors are offered from 2 to 42 circuits and from 70 to 225 A.

### Quality

Built in ISO 9002 certified manufacturing facilities, customers can be assured of the process quality in place for the manufacture of these products. Utilizing the latest in computer-controlled plating, painting, molding, stamping and welding processes, Eaton's customers have come to expect consistent high-quality from shipment to shipment.

### Two Products Offer Design Flexibility

As a manufacturer of two lines of loadcenters, Eaton is in a unique position to offer the broadest range of interiors in the market. Each line has its own unique characteristics that appeal to various segments of the market. OEM interiors are UL recognized components and are listed in either of the following UL files: E8741 or E52977.

The CH interiors feature 100% copper bus and use the CH 3/4-inch (19.1 mm) wide circuit breaker, which minimizes panel space. Recognized by contractors for its sturdy design, the CH interior will appeal to those customers seeking an industrial quality bolted busbar and the space saving of 3/4-inch (19.1 mm) per bus stab. With a typical 12 circuit CH interior, this space savings amounts to an inch and a half savings over its 1-inch (25.4 mm) counterparts. The stab rating of the CH interiors is 140 A maximum meaning that the handle rating of breakers mounted across from one another may not exceed 140 A.

The BR interiors are manufactured of formed, plated aluminum or copper, and use Eaton's Type BR 1-inch (25.4 mm) wide circuit breaker. This design affords customers the most circuit flexibility as many of these interiors allow the installation of standard single- and two-pole breakers as well as duplex (two poles in a 1-inch (25.4 mm) space) or quadplex (four poles in a 2-inch (50.8 mm) space) breakers.

The stab rating of the BR interiors is 200 A maximum, meaning that the handle rating of the breakers that are mounted across from one another may not exceed 200 A.

The interiors are designed for either horizontal (single-row breaker mounting), or vertical (double-row breaker mounting). To comply with National Electrical Code (NEC) requirements, if mounted horizontally, when the breaker is ON, the handle should be in the UP position. When mounted vertically, the handle toggles from left to right, so this is not a concern.

## Standards and Certifications

### Class CTL

National Electrical Code Paragraph 384.15 requires branch circuit panelboards to be provided with physical means to prevent the installation of more overcurrent devices than that number of which the enclosure was designed, rated and approved. Class CTL Duplex, Quadplex and twin breakers (identified by a catalog number prefix BD, BQ, BQC and CHT) are equipped with a UL listed rejection tab over the line terminal. All OEM interiors have appropriately notched stabs to accept these rejection tab Class CTL breakers.

Duplex, Quadplex and twin breakers manufactured without the rejection tab (identified by a catalog number prefix BR, BRD and CHT) are available for replacement purposes in older interiors.

### Federal Specifications

All loadcenter enclosures meet Federal Specifications W-P-115b, Type 1, Class 2 requirements.

All 120/240 V breakers, both 1-inch (25.4 mm), 1/2-inch (12.7 mm) and 3/4-inch (19.1 mm) per pole meet the requirement of Federal Specifications W-C 375B/Gen Type 1.

### Canadian Standards Association Listing

All single-pole and two-pole, 120/240 V breakers, both 1-inch (25.4 mm), 1/2-inch (12.7 mm) and 3/4-inch (19.1 mm) per pole, 225 A maximum, are listed as Certified by the Canadian Standards Association, Guide No. 69-11.19, Class 1432, File 18328.

### Underwriters Laboratories Listing

All grounding bars manufactured comply with Underwriters Laboratories standards and are listed under Guide No. DHJR, File E31424, Volume W, Section 17.

All circuit breakers 10 A and larger comply with the Underwriters Laboratories "Standard for Branch Circuit and Service Circuit-Breakers" UL 489; Guide No. 60 10.2 File E31424, and "Requirements for Wire Connectors and Soldering Lugs," UL 486B, Guide No. 461 10-C File E7830.

All Eaton breakers where marked, are suitable for use with 60/75 °C rated wire, unless otherwise specified.

All devices comply with the 22 kAIC–10 kAIC UL series connected components File DKSY2 of the Recognized Components Index.

### Lighting and Appliance Panelboards

Lighting and appliance branch circuit panelboards are defined in NEC (Article 384) as "One having more than 10 percent of its overcurrent devices rated 30 A or less for which neutral connections are provided." Article 384 also limits the number of overcurrent devices (branch circuit poles) to a maximum of 42 in any one cabinet. When the 42 poles are exceeded, two or more separate panels are required.

For more details and engineering drawings, see BR.31.02.S.E.

Listed

## Product Selection

### Type CH Loadcenter Interior Assemblies—Copper Bus

| Ampere Rating | Maximum Number 1-Inch (24.5 mm) Spaces | Single Poles | UL File Reference | Main Terminal Size (Per Phase) | Standard Package Quantity | Catalog Number |
|---|---|---|---|---|---|---|
| **Single-Phase Single Row Breaker Mounting—120/240 Vac, Three-Wire** | | | | | | |
| 70 | 2 | 2 | E8741 | (1) #8–#2 AWG Cu/Al | 1 | **CH9MB270** |
| 125 | 2 | 2 | E8741 | (1) 2/0–#6 AWG Cu/Al | 20 | **CH2L125INT** |
| **Single-Phase Double Row Breaker Mounting—120/240 Vac, Three-Wire** | | | | | | |
| 125 | 4 | 4 | E8741 | (1) 2/0–#14 AWG Cu/Al | 20 | **CH4L125INT** |
| 125 | 8 | 8 | E8741 | (1) 2/0–#6 AWG Cu/Al | 20 | **CH8L125INT** |
| 125 | 12 | 12 | E8741 | (1) 2/0–#6 AWG Cu/Al | 20 | **CH12L125INT** |
| 125 | 16 | 16 | E8741 | (1) 2/0–#6 AWG Cu/Al | 20 | **CH16L125INT** |
| 200 | 12 | 12 | E8741 | (1) 300 kcmil–#4 AWG Cu/Al | 20 | **CH12L200INT** |
| 200 | 16 | 16 | E8741 | (1) 300 kcmil–#4 AWG Cu/Al | 10 | **CH16L200INT** |
| 225 | 24 | 24 | E8741 | (1) 300 kcmil–#4 AWG Cu/Al | 10 | **CH24L225INT** |
| 225 | 32 | 32 | E8741 | (1) 300 kcmil–#4 AWG Cu/Al | 10 | **CH32L225INT** |
| 225 | 42 | 42 | E8741 | (1) 300 kcmil–#4 AWG Cu/Al | 10 | **CH42L225INT** |
| **Three-Phase Double Row Breaker Mounting—208Y/120 Vac, Four-Wire—240 Vac, Three-Wire—120/240 Vac, Four-Wire Delta** | | | | | | |
| 125 | 12 | 12 | E8741 | (1) 2/0–#6 AWG Cu/Al | 10 | **CH12L3125INT** |
| 125 | 18 | 18 | E8741 | (1) 2/0–#6 AWG Cu/Al | 10 | **CH18L3125INT** |
| 125 | 24 | 24 | E8741 | (1) 2/0–#6 AWG Cu/Al | 10 | **CH24L3125INT** |
| 225 | 24 | 24 | E8741 | (1) 300 kcmil–#4 AWG Cu/Al | 10 | **CH24L3225INT** |
| 225 | 30 | 30 | E8741 | (1) 300 kcmil–#4 AWG Cu/Al | 10 | **CH30L3225INT** |
| 225 | 42 | 42 | E8741 | (1) 300 kcmil–#4 AWG Cu/Al | 10 | **CH42L3225INT** |

BR Loadcenter Interior Assembly

## Type BR Loadcenter Interior Assemblies—Aluminum Bus

| Ampere Rating | Maximum Number 1-Inch (24.5 mm) Spaces | Single Poles | UL File Reference | Main Terminal Size (Per Phase) | Standard Package Quantity | Catalog Number |
|---|---|---|---|---|---|---|
| **Single-Phase Single Row Breaker Mounting—120/240 Vac, Three-Wire** | | | | | | |
| 70 | 2 | 4 | E8741 | (1) #8–#2 AWG Cu/Al | 20 | **24INT70B** |
| 125 | 2 | 4 | E8741 | (1) 1/0–#14 AWG Cu<br>2/0–12 AWG Al | 20 | **24INT125B** |
| 125 | 6 | 12 | E52977 | (1) 2/0–#14 AWG Cu/Al | 20 | **612INT125SRB** |
| **Single-Phase Double Row Breaker Mounting—120/240 Vac, Three-Wire** | | | | | | |
| 125 | 4 | 8 | E8741 | (1) 2/0–#14 AWG Cu/Al | 20 | **48INT125B** |
| 125 | 6 | 12 | E8741 | (1) 2/0–#14 AWG Cu/Al | 20 | **612INT125B** |
| 125 | 8 | 16 | E8741 | (1) 2/0–#14 AWG Cu/Al | 20 | **816INT125B** |
| 125 | 12 | 12 | E52977 | (1) 2/0–#14 AWG Cu/Al | 20 | **1212INT125B** |
| 125 | 12 | 24 | E52977 | (1) 2/0–#14 AWG Cu/Al | 20 | **1224INT125B** |
| 125 | 16 | 24 | E52977 | (1) 2/0–#14 AWG Cu/Al | 20 | **1624INT125B** |
| 125 | 20 | 24 | E52977 | (1) 2/0–#14 AWG Cu/Al | 10 | **2024INT125B** |
| 125 | 24 | 24 | E52977 | (1) 2/0–#14 AWG Cu/Al | 10 | **2424INT125B** |
| 200 | 8 | 16 | E52977 | (1) 300 kcmil–#1 AWG Cu/Al | 20 | **816INT200B** |
| 200 | 12 | 24 | E52977 | (1) 300 kcmil–#1 AWG Cu/Al | 20 | **1224INT200B** |
| 200 | 30 | 40 | E52977 | (1) 300 kcmil–#1 AWG Cu/Al | 10 | **3040INT200B** |
| 225 | 42 | 42 | E52977 | (1) 300 kcmil–#1 AWG Cu/Al | 10 | **4242INT225B** |
| **Three-Phase Double Row Breaker Mounting—208Y/120 Vac, Four-Wire—240 Vac, Three-Wire—120/240 Vac, Four-Wire Delta** | | | | | | |
| 125 | 12 | 24 | E52977 | (1) 2/0–#8 AWG Cu/Al | 10 | **1224INT3125B** |
| 150 | 18 | 36 | E52977 | (1) 300 kcmil–#2 AWG Cu/Al | 10 | **1836INT3150B** |
| 150 | 24 | 42 | E52977 | (1) 300 kcmil–#2 AWG Cu/Al | 10 | **2442INT3150B** |
| 200 | 30 | 42 | E52977 | (1) 300 kcmil–#2 AWG Cu/Al | 10 | **3042INT3200B** |
| 225 | 42 | 42 | E52977 | (1) 300 kcmil–#2 AWG Cu/Al | 10 | **4242INT3225B** |

## Type BR Loadcenter Interior Assemblies—Copper Bus

| Ampere Rating | Maximum Number 1-Inch (24.5 mm) Spaces | Single Poles | UL File Reference | Main Terminal Size (Per Phase) | Standard Package Quantity | Catalog Number |
|---|---|---|---|---|---|---|
| **Single-Phase Double Row Breaker Mounting—120/240 Vac, Three-Wire** | | | | | | |
| 125 | 8 | 16 | E5297 | (1) 2/0–#14 AWG Cu/Al | 20 | **816INT125BC** |
| 125 | 12 | 12 | E5297 | (1) 2/0–#14 AWG Cu/Al | 20 | **1212INT125BC** |
| 200 | 12 | 24 | E5297 | (1) 300 kcmil–#1 AWG Cu/Al | 20 | **1224INT200BC** |
| **Three-Phase Double Row Breaker Mounting—208Y/120 Vac, Four-Wire—240 Vac, Three-Wire—120/240 Vac, Four-Wire Delta** | | | | | | |
| 125 | 12 | 24 | E52977 | (1) 2/0–#8 AWG Cu/Al | 10 | **1224INT3125BC** |
| 200 | 12 | 24 | E52977 | (1) 300 kcmil–#2 AWG Cu/Al | 10 | **1224INT3200BC** |

## Neutral Assemblies

| Ampere Rating | UL File Rating | Main Incoming Terminal Wire Size Range 60 °C or 75 °C | Number of Terminals #14–4 AWG Cu/Al | Number of Terminals #6–1/0 AWG Cu #6–2/0 AWG Al | Standard Package Quantity | Figure | Dimensions–Inches (mm) Overall Length A | Dimensions–Inches (mm) Mounting B | Catalog Number |
|---|---|---|---|---|---|---|---|---|---|
| 125 | E52977 | #6–1/0 AWG Cu<br>#6–2/0 AWG Al | 10 | — | 20 | 1 | 5.938 (150.83) | 5.400 (137.16) | **10NEU125B** |
| 125 | E52977 | #6–1/0 AWG Cu<br>#6–2/0 AWG Al | 17 | — | 20 | 1 | 8.388 (213.06) | 7.850 (199.40) | **17NEU125B** |
| 125 | E52977 | #6–1/0 AWG Cu<br>#6–2/0 AWG Al | 20 | — | 20 | 1 | 9.438 (239.73) | 8.900 (226.06) | **20NEU125B** |
| 225 | E52977 | #1–300 kcmil Cu/Al | 24 | 1 | 20 | 2 | 10.913 (277.19) | 10.300 (261.62) | **24NEU225B** |
| 225 | E52977 | #1–300 kcmil Cu/Al | 35 | 1 | 20 | 2 | 15.813 (401.65) | 15.200 (386.08) | **35NEU225B** |
| 125 | — | — | 4 | 2 | 1 | 3 | 2.266 (57.56) | 0.594 (15.09) | **BINA** |

**Figure 1**

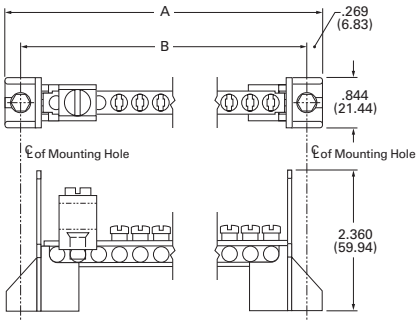


**Figure 2**

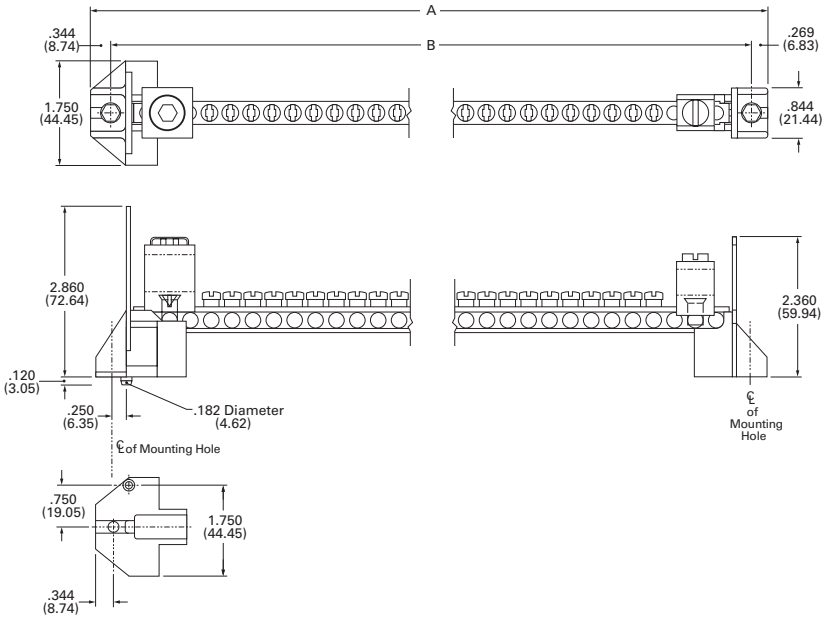


**Figure 3**

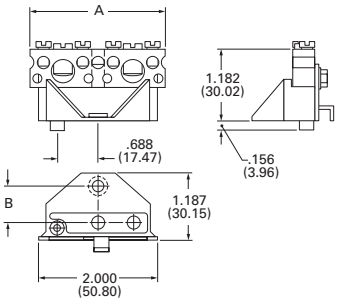

## Add-on Lugs for Neutral Assemblies

| Description | Wire Size Range Cu/Al 60 °C or 75 °C | Ordering Quantity ① | Catalog Number |
|---|---|---|---|
| Neutral/ground lug<br>Add-on neutral or ground lug | #2/0 maximum | 1 | **NL20** |
| | #3/0 maximum | 1 | **NL30** |
| | 300 kcmil maximum | 1 | **NL300** |

**GBK14**

**BRGBK39512**

## Ground Bar Kits

| Description (See Legend) | Length Inches (mm) | Ordering Quantity ① | Catalog Number |
|---|---|---|---|
| ●○○○○●○ | 2.54 (64.5) | 1 | **GBK5** ② |
| ●○○○○●○■ | 3.59 (91.2) | 1 | **GBK520** ② |
| ●○○○○●○○○○○○ | 4.29 (109.0) | 1 | **GBK10** ② |
| ●○○○○●○○○○○○■ | 5.34 (135.6) | 1 | **GBK1020** ② |
| ◒●◒◒◒⬓◒●◒⬓◒◒◒ | 4.61 (117.1) | 1 | **GBK13** ② |
| ●○○○○●○○○○○○○○○ | 5.69 (144.5) | 1 | **GBK14** ② |
| ●○○○○●○○○○○○○○○■ | 6.74 (171.2) | 1 | **GBK1420** ② |
| ●○○○○●○○○○○○○○○○○○○○○ | 8.14 (206.8) | 1 | **GBK21** ② |
| ●○○○○●○○○○○○○○○○○○○○○○■ | 9.19 (233.4) | 1 | **GBK2120** ② |
| ◒⬓◒●◒⬓◒◒◒⬓◒●◒⬓◒◒◒⬓◒ | 5.78 (146.8) | 1 | **BRGBK39512** ③④ |

**Ground Bar Legend**

○ (3) #14–10 Cu/Al or (1) #14–4 Cu/Al
■ (1) #6–2/0 Cu/Al
⬓ (1) #14–1/0 Cu/Al or (3) #14–10 Cu/Al
◒ (1) #14–6 Cu/Al or (2) #14–12 Cu/Al
● Mounting Hole

***Notes***

① Must be purchased in multiples of ordering quantities indicated.
② Distance between mounting holes is 1.75 inches (44.5 mm).
③ For single- and three-phase 400 and 600 A applications.
④ Distance between mounting holes is 2.34 inches (59.5 mm).

Enclosed Breakers

## Contents


| *Description* | *Page* |
|---|---|
| Product Selection | **V1-T1-95** |
| Dimensions | **V1-T1-95** |


## Product Overview

Eaton enclosed breakers offer all the advantages of circuit breakers packed in an enclosure for 240 Vac applications and include a wide range of accessories.

## Product Description

- 100–225 A, 240 Vac maximum
- NEMA 1 general purpose—surface or flush mounting
- NEMA 3R rainproof surface mounting

## Standards and Certifications

- UL 489
- CSA 22.2
- NEMA 250

Listed

## Product Selection

***Single-Phase and Three-Phase Circuit Breaker Enclosures—10/25 kAIC***

**ECC225R**

### Type ECC Circuit Breaker Enclosure—Order Type CC Circuit Breaker Separately

| Main Ampere Rating | Unit Enclosure Type | Mounting Type | Circuit Breaker Type | Wire Size Range Cu/Al 60 °C or 75 °C | Catalog Number |
|---|---|---|---|---|---|
| **Single- and Three-Phase—240 Vac Maximum** | | | | | |
| 100 | Indoor | Surface | CCVH factory installed (25 kAIC) | #4–4/0 | **ECCVH100S** ①②③ |
| 150 | Indoor | Surface | CCVH factory installed (25 kAIC) | #4–4/0 | **ECCVH150S** ①②③ |
| 200 | Indoor | Surface | CCVH factory installed (25 kAIC) | #2/0–300 kcmil | **ECCVH200S** ①②③ |
| 100 | Outdoor | — | CCVH factory installed (25 kAIC) | #4–4/0 | **ECCVH100R** ①②④ |
| 150 | Outdoor | — | CCVH factory installed (25 kAIC) | #4–4/0 | **ECCVH150R** ①②④ |
| 200 | Outdoor | — | CCVH factory installed (25 kAIC) | #2/0–300 kcmil | **ECCVH200R** ①②④ |
| 225 | Indoor | Flush | CC/CCV/CCH | ⑥ | **ECC225F** ②③⑤ |
| 225 | Indoor | Surface | CC/CCV/CCH | ⑥ | **ECC225S** ②③⑤ |
| 225 | Outdoor | — | CC/CCV/CCH | ⑥ | **ECC225R** ②③④⑤ |

**CCV2200**

### Circuit Breaker 240 Vac for Use in Type ECC Enclosures

| Ampere Rating | Wire Size Range Cu/Al 60 °C or 75 °C for Line Terminals | Type CCV and CC 10 kAIC Catalog Number | Type CCVH/CCH 25 kAIC Catalog Number |
|---|---|---|---|
| **Two-Pole** | | | |
| 60 | #4–4/0 | **CCV2060** | **CCVH2060** |
| 70 | | **CCV2070** | **CCVH2070** |
| 80 | | **CCV2080** | **CCVH2080** |
| 90 | | **CCV2090** | **CCVH2090** |
| 100 | | **CCV2100** | **CCVH2100** |
| 125 | | **CCV2125** | **CCVH2125** |
| 150 | | **CCV2150** | **CCVH2150** |
| 175 | #2/0–300 kcmil | **CCV2175** | **CCVH2175** |
| 200 | | **CCV2200** | **CCVH2200** |
| 225 | | **CCV2225** | **CCVH2225** |
| **Three-Pole** | | | |
| 100 | #4–4/0 | **CC3100** | **CCH3100** |
| 125 | | **CC3125** | **CCH3125** |
| 150 | | **CC3150** | **CCH3150** |
| 175 | #2/0–300 kcmil | **CC3175** | **CCH3175** |
| 200 | | **CC3200** | **CCH3200** |
| 225 | | **CC3225** | **CCH3225** |

### Shunt Trips and Auxiliary Contacts

| Description Type | Volts | Catalog Number Suffix Adder ⑦ |
|---|---|---|
| **Shunt Trip** | | |
| CC | 12 DC | **SR12** |
| CC | 24 DC | **SR24** |
| CC | 120 AC | **SR01** |
| CC | 208 AC | **SR08** |
| CC | 240 AC | **SR02** |
| CCV | 48–127 AC/48–60 DC | **SR01** |
| CCV | 9–24 AC/12–24 DC | **SR02** |
| CCV | 208–380 AC/100–127 DC | **SR04** |
| **Auxiliary Contact** | | |
| CC 1NO and 1NC | — | **AL1** |

## Dimensions

Approximate Dimensions in Inches (mm)

### ECC Unit Enclosures—NEMA Type 1 Indoor

| Height | Width | Depth |
|---|---|---|
| 23.25 (590.6) | 8.88 (225.4) | 4.50 (114.3) |

### ECC Unit Enclosures—NEMA Type 3R Outdoor

| Height | Width | Depth |
|---|---|---|
| 23.68 (601.7) | 9.31 (236.5) | 5.44 (138.1) |

***Notes***

① Factory installed CCVH breaker.
② Approved for service entrance.
③ One ground lug accepting (1) #14–#2 is factory installed. Also, there are pre-drilled holes to accept a GBK5 ground bar.
④ Rainproof panels are furnished with hub closures plates. For rainproof hubs, refer to **Page V1-T1-66**.
⑤ Order circuit breaker separately.
⑥ Wire size is determined by the circuit breaker installed in enclosure.
⑦ Add suffix indicated to end of breaker catalog number.

Classified Breakers

## Contents


| *Description* | *Page* |
|---|---|
| Product Selection | **V1-T1-97** |
| Accessories | **V1-T1-99** |
| Technical Data | **V1-T1-99** |
| Wiring Diagrams | **V1-T1-100** |


## Product Description

Eaton UL classified Replacement Circuit Breakers are available in both 3/4-inch Type CHQ and 1-inch Type CL, single- and two-pole configurations. These breakers are classified as direct replacements by Underwriters Laboratories. In addition to a UL listing, they also come with a 15-year warranty.

### Specified vs. UL Classified

Specified breakers are listed by the manufacturer of the panelboard for use in a particular panel. This doesn't mean that the panelboard manufacturer produced the specified breaker; it merely means that the panelboard manufacturer has tested the breaker in the panel. In fact, through the years, Eaton has manufactured thousands of breakers for other panelboard manufacturers.

UL classified breakers are produced by one manufacturer for use in place of the breakers specified on the panelboard. Like specified breakers, UL classified breakers have been tested in the panels for which they are approved.

### Testing

Classified breakers are tested extensively in numerous General Electric®, Siemens®, Murray®, Thomas & Betts®, Square D®, and Crouse-Hinds® panels. The tests are conducted with witnesses from Underwriters Laboratories Inc. and involve short-circuit, temperature, and insertion/withdrawal applications. This level of testing ensures that the breakers meet identified standards and have been found suitable by UL for the specified purpose.

### Understanding Classified Breaker Terminology

***Definitions***

Specified circuit breaker—each manufacturer lists the brands of circuit breakers that can be used in their panelboards. Often, manufacturers will not list competitors as specified, even though they are suitable replacements.

Classified circuit breaker—a breaker that is considered suitable, by a qualified third-party organization, for use in another manufacturer's panelboard.

Listed breaker—the listing of a circuit breaker is by an independent third party. Eaton classified breakers are listed by UL.

Labeled breaker—a breaker with a label affixed by an independent third party.

## Product Selection

### Type CHQ Replacement Breakers for Square D Type QO Loadcenters

***10 kAIC, 120 and 120/240 Vac***

**CHQ120 CHQ230**

#### Type CHQ Classified Breakers 3/4-Inch (19.1 mm) per Pole 120 or 120/240 Vac, 10 kAIC

| Ampere Rating | Wire Size Range Cu/Al 60 °C or 75 °C | Single-Pole 120/240 Vac Requires One 3/4-Inch (19.1 mm) Space 10 per Shelf Carton Catalog Number | Two-Pole 120/240 Vac Common Trip Requires Two 3/4-Inch (19.1 mm) Spaces 5 per Shelf Carton Catalog Number |
|---|---|---|---|
| 15 | (1) #14–8<br>(2) #14–10 | CHQ115 | CHQ215 |
| 20 | | CHQ120 | CHQ220 |
| 25 | | CHQ125 | CHQ225 |
| 30 | | CHQ130 | CHQ230 |
| 35 | | CHQ135 | CHQ235 |
| 40 | | CHQ140 | CHQ240 |
| 45 | | CHQ145 | CHQ245 |
| 50 | | CHQ150 | CHQ250 |
| 60 | | — | CHQ260 |

### Type CHQ Ground Fault and Arc Fault Replacement Breakers for Square D Type QO Loadcenters

***10 kAIC, 120 and 120/240 Vac***

**CHQ115GF CHQ220GF**

#### Type CHQ Ground Fault Breakers—5 Milliampere—3/4-Inch (19.1 mm) per Pole, 10 kAIC

| Ampere Rating | Wire Size Range Cu/Al 60 °C or 75 °C | Single-Pole 120 Vac Requires One 3/4-Inch (19.1 mm) Space 10 per Shelf Carton Catalog Number | Two-Pole 120/240 Vac Common Trip Requires Two 3/4-Inch (19.1 mm) Spaces 5 per Shelf Carton Catalog Number |
|---|---|---|---|
| 15 | (1) #14–8<br>(2) #14–10 | CHQ115GF | CHQ215GF |
| 20 | | CHQ120GF | CHQ220GF |
| 25 | | CHQ125GF | CHQ225GF |
| 30 | | CHQ130GF | CHQ230GF |
| 35 | | — | CHQ235GF |
| 40 | | — | CHQ240GF |
| 45 | | — | CHQ245GF |
| 50 | | — | CHQ250GF |

#### Type CHQ Surge Arrester

| Catalog Number |
|---|
| CHQSA |

1

## Type CL Replacement Breakers for Square D HOMELINE, General Electric, Crouse-Hinds, Thomas & Betts, Murray and ITE®/Siemens Loadcenters

CL_

### Type CL Breakers, 1-Inch (25.4 mm) per Pole, 10 kAIC

| Ampere Rating | Wire Size Range Cu/Al 60 °C or 75 °C | Single-Pole 120/240 V Requires One 1-Inch (25.4 mm) Space 10 per Shelf Carton Catalog Number | Two-Pole 120/240 V Common Trip Requires Two 1-Inch (25.4 mm) Spaces 5 per Shelf Carton Catalog Number |
|---|---|---|---|
| 15 | #14–4 | **CL115** | **CL215** |
| 20 | #14–4 | **CL120** | **CL220** |
| 25 | #14–4 | **CL125** | **CL225** |
| 30 | #14–4 | **CL130** | **CL230** |
| 35 | #14–4 | **CL135** | **CL235** |
| 40 | #14–4 | **CL140** | **CL240** |
| 45 | #14–4 | **CL145** | **CL245** |
| 50 | #14–4 | **CL150** | **CL250** |

CL_AF

### Type CL Classified Arc and Ground Fault Breakers (5 Milliampere), 1-Inch (25.4 mm) per Pole, 10 kAIC

| Ampere Rating | Wire Size Range Cu/Al 60 °C or 75 °C | Single-Pole 120/240 V Requires One 1-Inch (25.4 mm) Space 1 per Shelf Carton Catalog Number |
|---|---|---|
| **Arc Fault Breakers** | | |
| 15 | #14–4 | **CL115AF** |
| 20 | #14–4 | **CL115CAF** |
| 20 | #14–4 | **CL120AF** |
| 20 | #14–4 | **CL120CAF** |
| **Ground Fault Breakers** | | |
| 15 | #14–4 | **CL115GF** |
| 20 | #14–4 | **CL120GF** |
| 30 | #14–4 | **CL130GF** |

CLR_

### Type CL Classified Latching Remote Control Smart Breakers™, 1-Inch (25.4 mm) per Pole, 10 kAIC

| Ampere Rating | Wire Size Range Cu/Al 60 °C or 75 °C | Single-Pole 120 V Requires One 1-Inch (25.4 mm) Space 10 per Shelf Carton Catalog Number | Two-Pole 120/240 V Common Trip Requires Two 1-Inch (25.4 mm) Spaces 5 per Shelf Carton Catalog Number |
|---|---|---|---|
| 15 | (2) #14–10 | **CLRP115** | **CLRP215** |
| 20 | (2) #14–10 | **CLRP120** | **CLRP220** |
| 25 | (1) #8–6 | **CLRP125** | **CLRP225** |
| 30 | (1) #8–6 | **CLRP130** | **CLRP230** |

## Accessories

### CHQ Breaker Accessories

| Description | Catalog Number |
|---|---|
| Breaker handle lock | **CHLO** |

## Technical Data

### Arc Fault Application Notes

An arc fault circuit interrupter is a device intended to provide protection from the effects of arc faults by recognizing characteristics unique to arcing and by functioning to de-energize the circuit when the arc fault is detected. As of January 1, 2002, the National Electrical Code (NEC) requires all branch circuits that supply 125 V, single-phase, 15 and 20 A receptacle outlets installed in dwelling unit bedrooms shall be protected by an arc fault circuit interrupter(s). This includes ceiling lighting (recessed, ceiling fans, etc.) as well as smoke detectors and all other bedroom outlets. The 2005 NEC introduced the application of the Combination Type AFCI for bedroom circuits required as of January 1, 2008. The 2008 NEC expands this application to other living areas.

### Ground Fault Application Notes

Single-pole GFCBs are designed for use in two-wire, 120 Vac circuits. Drawing on **Page V1-T1-100** shows a typical wiring configuration.

Two-pole GFCBs are designed for use in three-wire, 120/240 Vac circuits, 120 Vac multiwire circuits employing common, neutral and two-wire, 240 Vac circuits obtained from a 120/240 Vac source.

Drawings on **Page V1-T1-100** illustrate typical wiring configurations for 120/240 Vac multiwire circuits.

Drawing on **Page V1-T1-100** depicts a 240 Vac, two-wire circuit. Note the "panel neutral" conductor connects to the neutral bar, even though the neutral is not included in the load circuit. This connection is necessary to supply a 120 Vac power source to the ground fault sensing circuit.

The figures are shown with a 120/240 Vac, single-phase, three-wire power source, ut are also applicable to a 120/208 Vac, three-phase, four-wire power supply. For all figures, the electrical operation of the GFCB is not affected by the equipment ground.

1

## Wiring Diagrams

### Single-Pole 120 V Load Application Sourced by 120/240 Vac

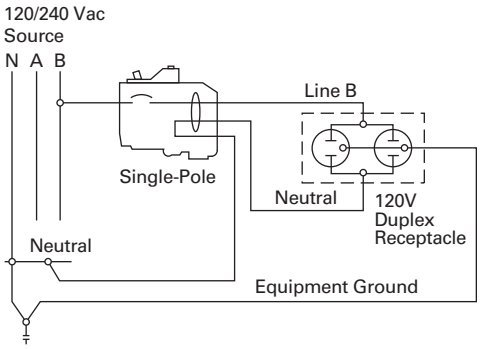


### Two-Pole 240 V Load Application Sourced by 120/240 Vac

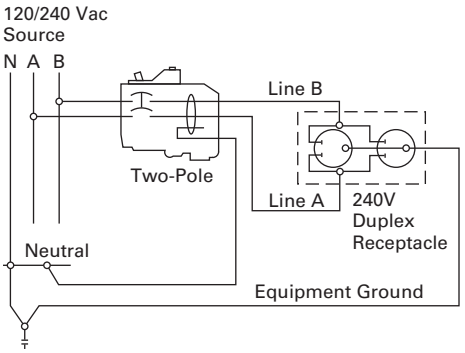


### Two-Pole Shared Neutral with Multi-Duplex Receptacle Application

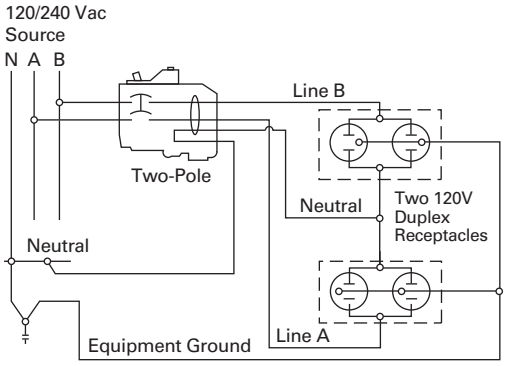


### Two-Pole Shared Neutral with Duplex Receptacle Application

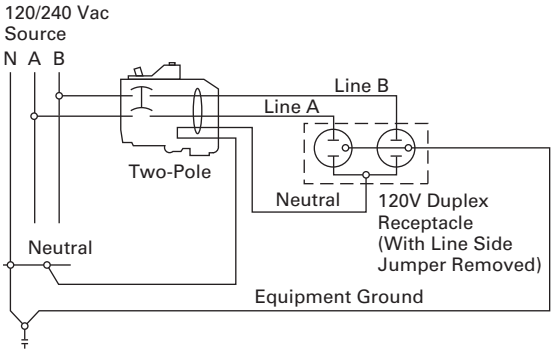


### Single-Pole 120 V Duplex Receptacle Application

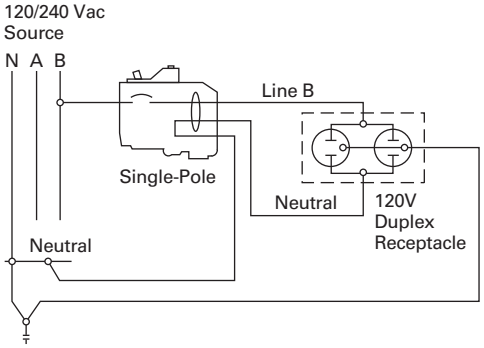


### Two-Pole 120 V Duplex Receptacle Application

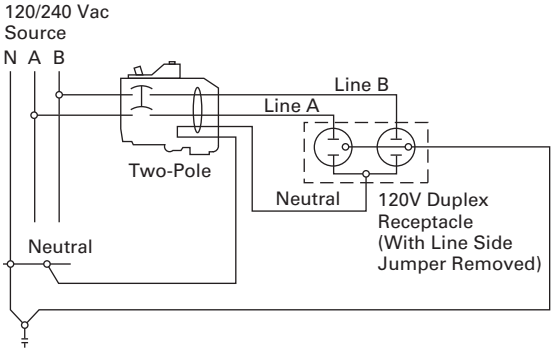


### Two-Pole 120 V Multi-Duplex Receptacle Application

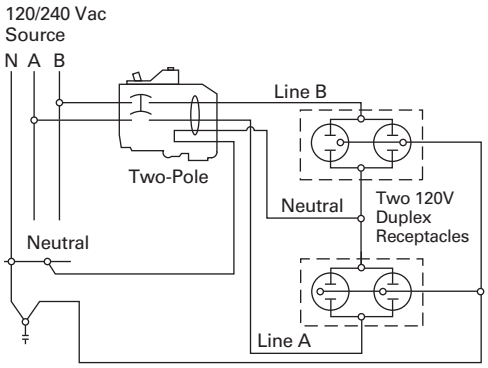


### Two-Pole 240 V Duplex Receptacle Application

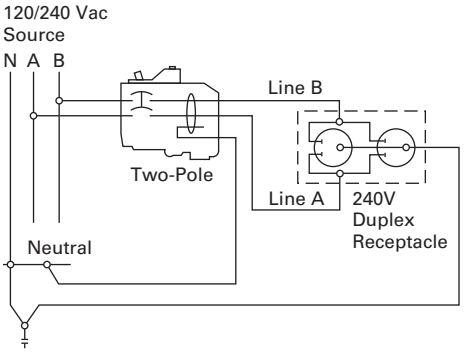

Surge Protection Devices

## 2.1 Surge Protection Devices and Lightning Arresters


Product Description . . . . . V1-T2-2
Application Description . . . . . V1-T2-2
Standards and Certifications . . . . . V1-T2-3
Product Selection . . . . . V1-T2-4




Learn Online

Surge Protection Devices

## Contents


| *Description* | *Page* |
|---|---|
| Surge Protection Devices and Lightning Arresters | |
| Standards and Certifications . . . . . | **V1-T2-3** |
| Product Selection . . . . . | **V1-T2-4** |


## Product Description

Due to the evolution of electronics and microprocessors in the home, there is a continuous challenge to provide quality (clean) power for electronic loads such as appliances, computers/home office and entertainment systems. Surges caused by lightning, utility grid switching and other sources travel on current carrying conductors throughout the home, which can affect and destroy sensitive electronic loads.

Eaton offers a comprehensive family of surge products for use at service entrances. These products can help protect sensitive electronics against the damaging effects of surges.

## Application Description

### Two-Stage Protection

Two stages of surge suppression are recommended to provide the best protection for electronic equipment. Two-stage surge suppression should be provided for all cables entering a home, including power, Internet, coaxial and telephone.

### Service Entrance Surge Protection

Eaton's service entrance surge protection units provide premier surge protection for AC power at the service entrance. These products provide protection for residential electrical equipment by reducing power surges to an acceptable level for surge strips to handle at the point of use.

#### *UL 1449 3rd Edition Type 1 and Type 2 Surge Protection*

- **Type 1 Surge Protective Device (SPD)**—Permanently connected Type 1 SPDs are intended for installation between the secondary of the service transformer and the line side of the service equipment overcurrent device, as well as the load side, including watt-hour meter socket enclosures, and are intended to be installed without an external overcurrent protective device. Type 1 devices are dual-rated for Type 2 applications as well, providing the highest ratings available for installation at the service entrance
  - Eaton's CHSPT1 products provide Type 1 surge protection in accordance with UL® 1449 3rd Edition. These units can be universally mounted outside any manufacturer's primary service equipment
- **Type 2 Surge Protective Device**—Permanently connected Type 2 SPDs are intended for installation on the load side of the service equipment overcurrent device, including SPDs located at the branch panel
  - CHSPT2 products provide Type 2 surge protection in accordance with UL 1449 3rd Edition. These units can be mounted outside of any manufacturer's loadcenter or inside an Eaton Surge/Surge Ready loadcenter. Eaton also offers accessories to the CHSPT2 line for telephone and cable protection
- **Factory-Installed Surge Protection**—Eaton's loadcenters with factory-installed surge protection include a CHSPT2ULTRA and a two-pole 50 A circuit breaker. These loadcenters increase the effectiveness of surge protection due to reduced lead length. A modified deadfront allows for easy viewing of indicating lights for status indication

*Surge Panel*

- **Surge Ready Loadcenter**—The Surge Ready loadcenter provides a mounting provision for the CHSPT2ULTRA. This loadcenter has a modified deadfront to allow for viewing of indicating lights

## Two-Stage Protection

① CHSP installed at the service entrance panel.
② SurgeTrap™ surge traps and strips located where sensitive electronics are plugged in.

### *Plug-On Surge Protection*

- **Type CHSA**—For use on single-phase 120/240 Vac systems. The CHSA easily plugs into a single-phase Type CH loadcenter and occupies two 3/4-inch (19.1 mm) pole spaces, similar to a two-pole Type CH breaker. When installed properly, it provides surge protection for the entire loadcenter. If internal components are damaged, the CHSA LED visual indicators will signal the need for a replacement. This device is suitable for service entry locations when installed in accordance with NEC® guidelines
- **Type BRSURGE**—For use on single-phase 120/240 Vac systems. This easily plugs into a single-phase Type BR loadcenter and occupies two 1-inch (25.4 mm) pole spaces similar to a two-pole Type BR breaker. When installed properly, it provides surge protection for the entire loadcenter. If internal components are damaged, the BRSURGE LED visual indicators will signal the need for replacement. This device is suitable for service entry locations when installed in accordance with NEC guidelines. This unit is also classified by UL for use in select GE, ITE/Siemens and Crouse-Hinds Panels (refer to Pub No. 5655B65H01 for additional details)
- **Type CHQSA**—For use on single-phase, 120/240 Vac systems. This unit easily plugs into a Square D single-phase loadcenter Type QO® and occupies two 3/4-inch (19.1 mm) pole spaces similar to a two-pole Type QO breaker. When installed properly, it provides surge protection for the entire loadcenter. If internal components are damaged, the CHQSA LED visual indicators will signal the need for a replacement. This device is suitable for service entrance locations installed in accordance with NEC guidelines. This device is UL classified to be used in place of Square D Type QO surge arresters (refer to Pub-23974)
- **Type BRSURGECSA**—For use on single-phase 120/240 Vac systems. This easily plugs into a single-phase Type BR loadcenter and occupies two 1-inch (25.4 mm) pole spaces similar to a two-pole Type BR breaker. When installed properly, it provides surge protection for the entire loadcenter. If internal components are damaged, the BRSURGECSA LED visual indicators will signal the need for replacement. This device is suitable for service entry locations when installed in accordance with Canadian Electrical Code. This device is CSA® listed to be used in a Type BR loadcenter

### Type 3 Point-of-Use Surge Protection

Point-of-use surge protectors such as surge receptacles are installed within 30 ft of conductor length from the service panel and are designed to offer premium surge protection for specific electronics while providing innovative features to enhance user convenience.

## Standards and Certifications

- CHSPT1 Products: UL 1449 3rd Edition Type 1
- CHSPT2 Products: UL/cUL® 1449 3rd Edition Type 2
- CHSPTELE: UL 497A, cUL
- CHSPCABLE: UL 6500, cUL
- NEMA® 3R Enclosure for CHSPTELE and CHSPCABLE: UL 50 Enclosure
- BRSURGE, CHSA, BRSURGECSA, CHQSA: UL 1449 3rd Edition plug-in type; Type 2 SPD

## Product Selection



### SPD Type 1 CHSP Service Entrance Surge Protection—UL 1449 3rd Edition

***Product Features***

- Commercial grade AC power protection
- Type 1 surge device for installation before or after the main service disconnect
- Convenient mounting options—universal fit to any manufacturer's equipment
- Clear, visible LED indication displaying status of the surge protector

| | Catalog Number | Connection | Enclosure | Voltage | Phase | Frequency (Hz) | MCOV ① | VPR ② | $I_n$ ③ | SCCR ④ | Surge Current Capacity, Per Phase Rating ⑤ |
|---|---|---|---|---|---|---|---|---|---|---|---|
| CHSPT1ULTRA | CHSPT1ULTRA | Permanently connected device installed before or after the service disconnect overcurrent device. | NEMA 4 | 100/200 Vac, 110/220 Vac, 120/240 Vac | Single | 50/60 | 300 V L–L, 150 V L–N | 1000 V L–L, 600 V L–N | 20 kA | 200 kA | 50 kA |
| CHSPT1MAX | CHSPT1MAX | Permanently connected device installed before or after the service disconnect overcurrent device. | NEMA 4 | 100/200 Vac, 110/220 Vac, 120/240 Vac | Single | 50/60 | 300 V L–L, 150 V L–N | 1000 V L–L, 600 V L–N | 20 kA | 200 kA | 45 kA |
| CHSPT1MICRO | CHSPT1MICRO | Permanently connected device installed before or after the service disconnect overcurrent device. | NEMA 4 | 100/200 Vac, 110/220 Vac, 120/240 Vac | Single | 50/60 | 300 V L–L, 150 V L–N | 1000 V L–L, 600 V L–N | 20 kA | 200 kA | 36 kA |
| CHSPT1-208Y | CHSPT1-208Y | Permanently connected device installed before or after the service disconnect overcurrent device. | NEMA 4 | 120/208 Vac | Three-phase wye | 50/60 | 300 V L–L, 150 V L–N | 1000 V L–L, 600 V L–N | 20 kA | 200 kA | 50 kA |

### Accessory for Type 1 CHSP Service Entrance Surge Protection

| | Catalog Number | Description |
|---|---|---|
| SP1DINRAILKIT | SP1DINRAILKIT | Mounting kit for wall or DIN rail installation. |

***Notes***

① MCOV: Maximum Continuous Operating Voltage that may be applied to the device per mode.
② VPR: Voltage Protection Rating is the measured limiting voltage after a surge event.
③ $I_n$: Nominal Discharge Current is the current that the device can withstand for 15 impulses.
④ SCCR: The amount of current the product can withstand under short-circuit conditions.
⑤ Surge Current Capacity: The maximum one time surge current rating per phase.

For warranty details, go to www.eaton.com/surgetrap.

## SPD Type 2 CHSP Service Entrance Surge Protection—UL 1449 3rd Edition; cUL

***Product Features***

- AC power protection
- Universally connects to any manufacturer's loadcenter (breaker box)
- Quick connect design—easy to mount telephone and cable protection modules
- LED status indication

| | Catalog Number | Connection | Enclosure | Voltage | Phase | Frequency (Hz) | MCOV ① | VPR ② | $I_n$ ③ | SCCR ④ | Surge Current Capacity, Per Phase Rating ⑤ |
|---|---|---|---|---|---|---|---|---|---|---|---|
| CHSPT2ULTRA | **CHSPT2ULTRA** | Can be attached to the outside of any manufacturer's loadcenter (breaker box). This product should be connected on the load side of the loadcenter main service disconnect through a dedicated circuit breaker (follow NEC Guidelines). | NEMA 4 | 120/240 Vac rated line voltage | Single | 60 | 150 V L–N, 300 V L–L | 600 V L–N, 1000 V L–L, 800 V N–G, 600 V L–G | 20 kA ⑥ | 22 kA | **108 kA** (L1–N 54 kA, L1–G 54 kA, L2-N 54 kA, L2–G 54 kA) |
| CHSPT2MAX | **CHSPT2MAX** | Can be attached to the outside of any manufacturer's loadcenter (breaker box). This product should be connected on the load side of the loadcenter main service disconnect through a dedicated circuit breaker (follow NEC Guidelines). | NEMA 4 | 120/240 Vac rated line voltage | Single | 60 | 150 V L–N, 300 V L–L | 600 V L–N, 1000 V L–L, 800 V N–G, 600 V L–G | 10 kA | 22 kA | **72 kA** (L1–N 36 kA, L1–G 36 kA, L2–N 36 kA, L2–G 36 kA) |
| CHSPT2MICRO | **CHSPT2MICRO** | Can be attached to the outside of any manufacturer's loadcenter (breaker box). This product should be connected on the load side of the loadcenter main service disconnect through a dedicated circuit breaker (follow NEC Guidelines). | NEMA 4 | 120/240 Vac rated line voltage | Single | 60 | 150 V L–N, 300 V L–L | 600 V L–N, 1000 V L–L, 800 V N–G, 600 V L–G | 5 kA | 22 kA | **36 kA** (L1–N 18 kA, L1–G 18 kA, L2–N 18 kA, L2–G 18 kA) |

***Notes***

① MCOV: Maximum Continuous Operating Voltage that may be applied to the device per mode.
② VPR: Voltage Protection Rating is the measured limiting voltage after a surge event.
③ $I_n$: Nominal Discharge Current is the current that the device can withstand for 15 impulses.
④ SCCR: The amount of current the product can withstand under short-circuit conditions.
⑤ Surge Current Capacity: The maximum one time surge current rating per phase.
⑥ When used with a 50 A two-pole circuit breaker, 10 kA when used with a 15 A two-pole circuit breaker.

For warranty details, go to www.eaton.com/surgetrap.

## Accessories for CHSP Type 2 Service Entrance Protection

| | Catalog Number | Description | Installation | Surge Current Capacity | DC Breakdown Voltage | Voltage |
|---|---|---|---|---|---|---|
| **CHSPCABLE** | **CHSPCABLE** | Quick Connect design—add additional telephone and AC protection modules; protects two quad shield cables; bi-directional | Indoor installation; or rain-tight when used with recommended enclosure | 10 kA per line | 145 V | |
| **CHSPTELE** | **CHSPTELE** | Quick Connect design—add additional AC and cable protection modules; protects four telephone lines | Indoor installation; or rain-tight when used with recommended enclosure | 20 kA per line | 230 V | Ring 90–120 Vac/ Tone 48–52 Vdc |
| **CHSPT23PACK** | **CHSPT23PACK** | 3-Pack: CHSPT2ULTRA+CHSPTELE+CHSPCABLE; Surge protection for AC power, telephone and cable—see individual product features | | See individual product ratings | | |
| **CHSP3RTELCABLE** | **CHSP3RTELCABLE** | Raintight enclosure for CHSPTELE and CHSPCABLE; top or bottom feed; enclosure only, surge not included; accommodates up to two devices | | | | |
| **CHSPFMKIT** | **CHSPFMKIT** | Flushmount kit for: CHSPT2ULTRA, CHSPT2MAX, CHSPT2MICRO, CHSPTELE, CHSPCABLE | | | | |
| **MSEGR2** | **MSEGR2** | Outdoor communication grounding device; meets 2008 NEC requirements for intersystem bonding termination | | | | |

***Note***

For warranty details, go to www.eaton.com/surgetrap.

## Type BR and CH Surge Breakers

***Product Description***

The CH and BR surge breaker is designed to provide premier AC power surge protection for sensitive electronics and appliances from the damaging effects of electrical surges. In addition, the surge breaker is a functional two-pole thermal magnetic breaker.

The combination of circuit protection and surge protection provides extra flexibility and space saving in the loadcenter.

***Product Features***

- Complete home surge protection for all circuits plus a functional two-pole thermal magnetic breaker
- LEDs provide protection status
- Plug-on connection to the busbar provides superior protection and easy installation for new construction or renovation
- Eliminates the potential for incorrect installation of externally mounted surge devices—(longer "lead" lengths can reduce protection levels)

**Type CH Surge Breakers**

**Type BR Surge Breakers**

| Catalog Number ① | Poles | Ampere Rating | Voltage | Phase | Frequency (Hz) | MCOV ② | VPR ③ | $I_n$ ④ | SCCR ⑤ | Surge Current Capacity, Per Phase Rating ⑥ |
|---|---|---|---|---|---|---|---|---|---|---|
| **Type CH Surge Breakers** | | | | | | | | | | |
| **CH230SUR** | Two-pole 10 kAIC | 30 | 120/240 Vac | Single | 50/60 | 150 V L–N, 300 V L–L | 600 V L–N, 1000 V L–L | 10 kA | 10 kA | 36 kA (L1–N 36 kA, L2–N 36 kA) |
| **CH250SUR** | | 50 | 120/240 Vac | Single | 50/60 | 150 V L–N, 300 V L–L | 600 V L–N, 1000 V L–L | 10 kA | 10 kA | 36 kA (L1–N 36 kA, L2–N 36 kA) |
| **Type BR Surge Breakers** | | | | | | | | | | |
| **BR230SUR** | Two-pole 10 kAIC | 30 | 120/240 Vac | Single | 50/60 | 150 V L–N, 300 V L–L | 600 V L–N, 1000 V L–L | 10 kA | 10 kA | 36 kA (L1–N 36 kA, L2–N 36 kA) |
| **BR250SUR** | | 50 | 120/240 Vac | Single | 50/60 | 150 V L–N, 300 V L–L | 600 V L–N, 1000 V L–L | 10 kA | 10 kA | 36 kA (L1–N 36 kA, L2–N 36 kA) |

***Notes***

① Clamshell packaging available with CS modification code on the end of catalog number.
② MCOV: Maximum Continuous Operating Voltage that may be applied to the device per mode.
③ VPR: Voltage Protection Rating is the measured limiting voltage after a surge event.
④ $I_n$: Nominal Discharge Current is the current that the device can withstand for 15 impulses.
⑤ SCCR: The amount of current the product can withstand under short-circuit conditions.
⑥ Surge Current Capacity: The maximum one time surge current rating per phase.

## Surge Protection Receptacles with LED Indicators and Audible Alarm



### *Product Description*

- Two-pole, three-wire grounding
- 15 A, 125 Vac; 20 A, 125 Vac; NEMA 5-15R and 5-20R

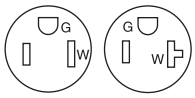


5-15R 5-20R

ArrowLink option available. Add "M" suffix to standard catalog number (example 8300WS, 8300WSM).

Build-to-spec customizable devices.

5362_S

IG5350_S

IG1208

1209

35M2S

| Catalog Number | Color Suffix | Ampere Rating | Voltage | NEMA | Description | | |
|---|---|---|---|---|---|---|---|
| **Receptacles with Audible Alarm and LED Indicators, Back and Side Wire** | | | | | | | |
| **5262__S** | BL, GY, V, W | 15 | 125 Vac | 5-15R | Surge duplex receptacle | ■ | ■ |
| **IG5262__S** | BL, GY, RN, V, W | | | | IG Surge duplex receptacle | ■ | ■ |
| **5362__S** | BL, GY, V, W | 20 | 125 Vac | 5-20R | Surge duplex receptacle | ■ | ■ |
| **IG5362__S** | BL, GY, RN, V, W | | | | IG Surge duplex receptacle | ■ | ■ |
| 560 Joules, max. surge current—18 kA per mode | | | | | | | |
| **Receptacles with LED Indicators, Back and Side Wire** | | | | | | | |
| **5250__S** | BL, GY, V, W | 15 | 125 Vac | 5-15R | Surge duplex receptacle | ■ | ■ |
| **IG5250__S** | BL, GY, RN, V, W | | | | IG Surge duplex receptacle | ■ | ■ |
| **5350__S** | BL, GY, V, W | 20 | 125 Vac | 5-20R | Surge duplex receptacle | ■ | ■ |
| **IG5350__S** | BL, GY, RN, V, W | | | | IG Surge duplex receptacle | ■ | ■ |
| 840 Joules, max. surge current—18 kA per mode | | | | | | | |
| **Receptacles with Audible Alarm** | | | | | | | |
| **1208__** | V, W | 15 | 125 Vac | 5-15R | Surge duplex receptacle | ■ | ■ |
| **IG1208__** | V, W | | | | IG Surge duplex receptacle | ■ | ■ |
| **1210__** | BL, V, W | 20 | 125 vac | 5-20R | Surge duplex receptacle | ■ | ■ |
| **IG1210__** | V, W | | | | IG Surge duplex receptacle | ■ | ■ |
| 340 Joules, max. surge current—12 kA per mode | | | | | | | |

| Catalog Number | Color Suffix | Ampere Rating | Voltage | Description |
|---|---|---|---|---|
| **Multimedia Wallplates with Surge Protectors** | | | | |
| **35M2S-__** | W | 15 | 125 | Multimedia wallplate with recessed duplex surge receptacle |
| cETLus listed to UL1863 & ANSI/UL 60950-1, CSA C22.2 no. 60950-1-03; complies with all TIA/EIA 568-A & 570-B requirements | | | | |

| Catalog Number | Color Suffix | Description |
|---|---|---|
| **Replacement Surge Bloc Module** | | |
| **1209__** | A, BL, GY, V, W | Replacement module |

| Catalog Number | Color Suffix | Description |
|---|---|---|
| **Accessories for Surge Protection Receptacles** | | |
| **PJ26BL** | BL | 1-Gang mid-size decorator polycarbonate wallplate |
| **PJ26W** | W | 1-Gang mid-size decorator polycarbonate wallplate |
| **PJ26IG** | RN | 1-Gang mid-size decorator polycarbonate wallplate, pre-marked "ISOLATED GROUND" |

***Notes***

For ordering devices, include catalog number followed by the color suffix: BL (Blue), GY (Gray), RD (Red), RN (Orange), V (Ivory), W (White)

| BL | GY | RD | RN | V | W |
|---|---|---|---|---|---|
| (Blue) | (Gray) | (Red) | (Orange) | (Ivory) | (White) |

Compliances, specifications and availability are subject to change without notice.

***Factory-Installed Surge Protection***

- Includes a CHSPT2ULTRA and a two-pole 50 A circuit breaker
- Increases the effectiveness of surge protection due to reduced lead length
- A modified deadfront allows for easy viewing of indicating lights for status indication

**Surge Installed**

## Surge Installed Loadcenters

| Catalog Number | Description | Cover Catalog Number Combination | Surface |
|---|---|---|---|
| **CHSUR42N225L** ① | 42 ckt, 225 A, convertible | **CHSUR8LF** | **CHSUR8LS** |
| **CHSUR42L225L2** ① | 42 ckt, 225 A, convertible ② | **CHSUR8LF** | **CHSUR8LS** |
| **CHSUR42B200L2** ① | 42 ckt, 200 A, main breaker | **CHSUR8LF** | **CHSUR8LS** |
| **CHSUR32N225K** ① | 32 ckt, 225 A, convertible | **CHSUR8KF** | **CHSUR8KS** |
| **CHSUR32L225K** ① | 32 ckt, 225 A, convertible ② | **CHSUR8KF** | **CHSUR8KS** |
| **CHSUR32B200K** ① | 32 ckt, 200 A, main breaker | **CHSUR8KF** | **CHSUR8KS** |
| **CHSUR32B150K** ① | 32 ckt, 150 A, main breaker | **CHSUR8KF** | **CHSUR8KS** |
| **CHSUR32B100K** ① | 32 ckt, 100 A, main breaker | **CHSUR8KF** | **CHSUR8KS** |
| **CHSUR24L125E** ① | 24 ckt, 125 A, convertible ② | **CHSUR8EF** | **CHSUR8ES** |
| **CHSUR24B100E** ① | 24 ckt, 100 A, main breaker | **CHSUR8EF** | **CHSUR8ES** |
| **BRSUR4040N200** | 40/40 ckt, 200 A, convertible | Cover included | |
| **BRSUR4040L200** | 40/40 ckt, 200 A, main lug | Cover included | |
| **BRSUR4040B200** | 40/40 ckt, 200 A, main breaker | Cover included | |
| **BRSUR3040N200** | 30/40 ckt, 200 A, convertible | Cover included | |
| **BRSUR3040L200** | 30/40 ckt, 200 A, main lug | Cover included | |
| **BRSUR3040B200** | 30/40 ckt, 200 A, main breaker | Cover included | |

***Surge Ready Loadcenters***

- Provides a mounting provision for CHSPT2ULTRA
- A modified deadfront allows for easy viewing of indicating lights

**Surge Ready**

## Surge Ready Loadcenters (Provision Only, CHSPT2ULTRA and Breaker Not Included)

| Catalog Number | Description | Cover Catalog Number Combination | Surface |
|---|---|---|---|
| **CHEC42N225L** ① | 42 ckt, 225 A, convertible | **CHSUR8LF** | **CHSUR8LS** |
| **CHEC42L225L** ① | 42 ckt, 225 A, convertible ② | **CHSUR8LF** | **CHSUR8LS** |
| **CHEC42B200L** ① | 42 ckt, 200 A, main breaker | **CHSUR8LF** | **CHSUR8LS** |
| **CHEC32L225K** ① | 32 ckt, 225 A, convertible ② | **CHSUR8KF** | **CHSUR8KS** |
| **CHEC32N225K** ① | 32 ckt, 225 A, convertible | **CHSUR8KF** | **CHSUR8KS** |
| **CHEC32B200K** ① | 32 ckt, 200 A, main breaker | **CHSUR8KF** | **CHSUR8KS** |
| **CHEC32B150K** ① | 32 ckt, 150 A, main breaker | **CHSUR8KF** | **CHSUR8KS** |
| **CHEC32B100K** ① | 32 ckt, 100 A, main breaker | **CHSUR8KF** | **CHSUR8KS** |
| **CHEC24L125E** ① | 24 ckt, 125 A, convertible ② | **CHSUR8EF** | **CHSUR8ES** |
| **CHEC24B100E** ① | 24 ckt, 100 A, main breaker | **CHSUR8EF** | **CHSUR8ES** |

***Notes***

① Order cover separately.
② With main lugs installed.

## SPD Type 2 Plug-On Surge Protection—UL 1449 3rd Edition

***Product Features***

- Convenient surge protection for the loadcenter

| | Catalog Number | Description | Connection | Voltage | Phase | Frequency (Hz) | MCOV ① | VPR ② | $I_n$ ③ | SCCR ④ | Surge Current Capacity, Per Phase Rating ⑤ |
|---|---|---|---|---|---|---|---|---|---|---|---|
| BRSURGE | **BRSURGE** | UL for use in a single-phase Type BR loadcenter. This unit is classified by UL for use in select GE, ITE/Siemens and Crouse-Hinds panels (refer to Pub. No. 5655B65H01 for additional details). | Plug on to the loadcenter bus; see instructions. | 120/240 Vac | Single | 60 | 150 V L1–N, 300 V L–L | 600 V L1–N, 1000 V L–L | 3 kA | 10 kA | 18 kA |
| CHSA | **CHSA** | UL and CSA for use in a Type CH loadcenter. | Plug on to the loadcenter bus; see instructions. | 120/240 Vac | Single | 60 | 150 V L1–N, 300 V L–L | 600 V L1–N, 1000 V L–L | 3 kA | 10 kA | 18 kA |
| BRSURGECSA | **BRSURGECSA** | CSA for use in an Eaton Type BR loadcenter. | Plug on to the loadcenter bus; see instructions. | 120/240 Vac | Single | 60 | 150 V L1–N, 300 V L–L | 600 V L1–N, 1000 V L–L | 3 kA | 10 kA | 18 kA |
| CHQSA | **CHQSA** | This device is UL classified to be used in place of Square D Type QO surge arresters (refer to Pub-23974). | Plug on to the loadcenter bus; see instructions. | 120/240 Vac | Single | 60 | 150 V L1–N, 300 V L–L | 600 V L1–N, 1000 V L–L | 3 kA | 10 kA | 18 kA |

***Notes***

① MCOV: Maximum Continuous Operating Voltage that may be applied to the device per mode.
② VPR: Voltage Protection Rating is the measured limiting voltage after a surge event.
③ $I_n$: Nominal Discharge Current is the current that the device can withstand for 15 impulses.
④ SCCR: The amount of current the product can withstand under short-circuit conditions.
⑤ Surge Current Capacity: The maximum one-time surge current rating per phase.

For warranty details, go to www.eaton.com/surgetrap.

# Residential Standby Backup Power Solutions

**3.1 Standby Generators**

Product Description . . . . . V1-T3-2
Application Description . . . . . V1-T3-2
Features, Benefits and Functions . . . . . V1-T3-2
Standards and Certifications . . . . . V1-T3-2
Catalog Number Selection . . . . . V1-T3-3
Product Selection . . . . . V1-T3-3
Air-Cooled Generators . . . . . V1-T3-3
Liquid-Cooled Generators . . . . . V1-T3-4
Accessories . . . . . V1-T3-5
Sizing Guidelines . . . . . V1-T3-6
Dimensions . . . . . V1-T3-6

**3.2 Portable Generators**

Product Selection . . . . . V1-T3-8
Dimensions . . . . . V1-T3-10

**3.3 Automatic Transfer Switches**

Product Description . . . . . V1-T3-11
Application Description . . . . . V1-T3-11
Standards and Certifications . . . . . V1-T3-12
Product Selection . . . . . V1-T3-13
Standard Automatic Transfer Switches . . . . . V1-T3-13
Green Automatic Transfer Switches—Featuring Active Load Management Technology . . . . . V1-T3-13
ATS Ready Loadcenter . . . . . V1-T3-14
Dimensions . . . . . V1-T3-15

**3.4 Manual Transfer Switches**

Product Description . . . . . V1-T3-16
Application Description . . . . . V1-T3-16
Features, Benefits and Functions . . . . . V1-T3-16
Standards and Certifications . . . . . V1-T3-17
Reference Information . . . . . V1-T3-17
Product Selection . . . . . V1-T3-18
Manual Transfer Switches and Generator Panels Selection . . . . . V1-T3-18
Power Inlet Boxes . . . . . V1-T3-18
Technical Data and Specifications . . . . . V1-T3-19
Dimensions . . . . . V1-T3-19

**Standby Generator Systems**

*EGENX20A*

*EGEN70*

## Contents


| *Description* | *Page* |
|---|---|
| Standby Generators | |
| Catalog Number Selection | **V1-T3-3** |
| Product Selection | **V1-T3-3** |
| Accessories | **V1-T3-5** |
| Sizing Guidelines | **V1-T3-6** |
| Dimensions | **V1-T3-6** |


## Product Description

A standby generator system is a package of equipment specifically designed to provide substitute electrical power to a residence in the event of a utility power outage. These systems are comprised of a generator, transfer switch and the connections necessary for installation. Eaton's standby generator line consists of air-cooled and liquid-cooled models ranging from 8000 watts up to 150,000 watts.

### Air-Cooled Standby

Eaton's air-cooled generators range from 8 to 22 kW and these units are perfect for automatically backing up every circuit within a home such as air conditioner units, refrigerators, lighting, furnace fans, sump pumps and water pumps.

Eaton's air-cooled standby generators offer fully automatic operation and provide most homeowners with enough power for complete whole house comfort. These units all operate at ultra quiet 66 dB, or less, sound level.

### Liquid-Cooled Standby

Eaton's liquid-cooled generators feature automotive style engines that range from 22 to 150 kW of power output. These units run so quietly that you'll forget that you own a generator until you need it. These units are available in steel or aluminum enclosures and are available in single- and three-phase in four voltages: 120/240 V, single-phase; 120/208 V, three-phase; 240 V, three-phase; and 277/480 V, three-phase.

## Application Description

Standby generator systems are most often used in residential, agricultural and light commercial applications. Comfort and safety are key concerns of many homeowners who are dependent on an uninterrupted supply of electricity.

The increase in our dependence on power is due in part to the popularity of home offices and in-home health care. Many regions of the United States experience periodic power outages due to extreme weather conditions such as ice and snowstorms, heat waves, tornadoes or hurricanes.

Eaton highly recommends that any generator system be installed by a qualified electrician and/or generator installer.

## Features, Benefits and Functions

Eaton's generator systems offer a wide range of features. All systems feature:

- Powerful engines
- Reliable Eaton transfer switches and control systems using switching duty rated circuit breakers
- Weekly exercise function
- Automatic transfer systems feature automatic start/stop

## Standards and Certifications

- CSA®, cUL® and UL 2200 listed and approved
- SCAQMD (selected models only)
- All transfer switches are UL® 67 and UL 1008 listed as "Transfer Switches"
- All generators are UL 2200 listed

Listed Listed

## Catalog Number Selection

### Air-Cooled Generators

**EGENX 22 A**

| Type | Rated Power (LP/NG) | Enclosure |
|---|---|---|
| Eaton generator EGENX Series | **8** = 8/7 kW<br>**11** = 11/10 kW<br>**16** = 16/16 kW<br>**20** = 20/18 kW<br>**22** = 22/19.5 kW | **A** = Aluminum<br>**Blank** = Steel |

### Liquid-Cooled Generators

**EGEN 25 A N S Y**

| kW Rating | | Voltage Required | Fuel Type | Enclosure | SCAQMD Compliance |
|---|---|---|---|---|---|
| **22** | **60** | **A** = Single-phase 120/240 V | **N** = Natural gas | **A** = Aluminum | **N** = No |
| **25** | **70** | **G** = Three-phase 208 V | **L** = Liquid propane | **S** = Steel | **Y** = Yes |
| **27** | **80** | **J** = Three-phase 240 V | | | |
| **30** | **100** | **K** = Three-phase 480 V | | | |
| **36** | **130** | | | | |
| **45** | **150** | | | | |
| **48** | | | | | |

## Product Selection

### Air-Cooled Generators

| Rated Power kW (LP/NG) | Maximum Rated Amperes at 240 Vac (LP/NG) | Main Line Circuit Breaker Amperes | Enclosure Material | Engine Size | Number of Cylinders | Fuel Type | GFI Receptacle | SCAQMD Compliant | Sound Emissions (dB at 7 m) | Limited Warranty (yrs) | Catalog Number ① |
|---|---|---|---|---|---|---|---|---|---|---|---|
| 8/7 | 33.3/29.2 | 35 | Steel | 410 cc | 1 | Liquid propane/ natural gas | No | Yes | 62 | 5 | **EGENX8** |
| 11/10 | 45.8/41.7 | 50 | Aluminum | 530 cc | 2 | Liquid propane/ natural gas | No | Yes | 63 | 5 | **EGENX11A** |
| 16/16 | 66.6/66.6 | 65/55 | Aluminum | 992 cc | 2 | Liquid propane/ natural gas | No | Yes | 66 | 5 | **EGENX16A** |
| 20/18 | 83.3/75.0 | 90 | Aluminum | 999 cc | 2 | Liquid propane/ natural gas | Yes | Yes | 66 | 5 | **EGENX20A** ② |
| 22/19.5 | 91.7/81.2 | 100 | Aluminum | 999 cc | 2 | Liquid propane/ natural gas | Yes | Yes | 67 | 5 | **EGENX22A** ② |

***Notes***

① Battery to be furnished by others. Recommended size: Group 26R, 12 V, 225 CCA min.

② Includes base fascia (No. EGENFASCIA) as standard.

**EGEN48ANAN**

## Liquid-Cooled Generators ①②

| Catalog Number Prefix | kW Rating | Voltages Available | Fuel Type | Enclosure | SCAQMD Compliance ③ |
|---|---|---|---|---|---|
| **EGEN22** | 22 | **G**—208 V, three-phase | **N**—NG/LP field convertible (Default set up for NG) | **S**—Steel | **Y**—Yes (Default Compliant) |
| | | **J**—240 V, three-phase | | | |
| **EGEN25** | 25 | **A**—120/240 V, single-phase | **N**—NG/LP field convertible (Default set up for NG) | **S**—Steel | **Y**—Yes (Default Compliant) |
| | | **G**—208 V, three-phase | | | |
| | | **J**—240 V, three-phase | | | |
| **EGEN27** | 27 | **A**—120/240 V, single-phase | **N**—NG/LP field convertible (Default set up for NG) | **A**—Aluminum | **Y**—Yes (Default Compliant) |
| | | **G**—208 V, three-phase | | | |
| | | **J**—240 V, three-phase | | | |
| **EGEN30** | 30 | **A**—120/240 V, single-phase | **N**—NG/LP field convertible (Default set up for NG) | **S**—Steel | **Y**—Yes (Default Compliant) |
| | | **G**—208 V, three-phase | | | |
| | | **J**—240 V, three-phase | | | |
| **EGEN36** | 36 | **A**—120/240 V, single-phase | **N**—NG/LP field convertible (Default set up for NG) | **A**—Aluminum | **Y**—Yes |
| | | **G**—208 V, three-phase | | | |
| | | **J**—240 V, three-phase | | | **N**—No |
| | | **K**—480 V, three-phase | | | |
| **EGEN45** | 45 | **A**—120/240 V, single-phase | **N**—NG/LP field convertible (Default set up for NG) | **S**—Steel | **Y**—Yes |
| | | **G**—208 V, three-phase | | | |
| | | **J**—240 V, three-phase | | | **N**—No |
| | | **K**—480 V, three-phase | | | |
| **EGEN48** | 48 | **A**—120/240 V, single-phase | **N**—NG/LP field convertible (Default set up for NG) | **A**—Aluminum | **Y**—Yes |
| | | **G**—208 V, three-phase | | | |
| | | **J**—240 V, three-phase | | | **N**—No |
| | | **K**—480 V, three-phase | | | |
| **EGEN60** | 60 | **A**—120/240 V, single-phase | **N**—Natural gas | **A**—Aluminum | **Y**—Yes |
| | | **G**—208 V, three-phase | | | |
| | | **J**—240 V, three-phase | **L**—Liquid propane | **S**—Steel | **N**—No |
| | | **K**—480 V, three-phase | | | |
| **EGEN70** | 70 | **A**—120/240 V, single-phase | **N**—Natural gas | **A**—Aluminum | **Y**—Yes |
| | | **G**—208 V, three-phase | | | |
| | | **J**—240 V, three-phase | **L**—Liquid propane | | **N**—No |
| | | **K**—480 V, three-phase | | | |
| **EGEN80** | 80 | **A**—120/240 V, single-phase | **N**—Natural gas | **A**—Aluminum | **Y**—Yes |
| | | **G**—208 V, three-phase | | | |
| | | **J**—240 V, three-phase | **L**—Liquid propane | | **N**—No |
| | | **K**—480 V, three-phase | | | |
| **EGEN100** | 100 | **A**—120/240 V, single-phase | **N**—Natural gas | **A**—Aluminum | **Y**—Yes |
| | | **G**—208 V, three-phase | | | |
| | | **J**—240 V, three-phase | **L**—Liquid propane | | **N**—No |
| | | **K**—480 V, three-phase | | | |
| **EGEN130** | 130 | **A**—120/240 V, single-phase | **N**—Natural gas | **A**—Aluminum | **Y**—Yes |
| | | **G**—208 V, three-phase | | | |
| | | **J**—240 V, three-phase | **L**—Liquid propane | | **N**—No |
| | | **K**—480 V, three-phase | | | |
| **EGEN150** | 150 | **A**—120/240 V, single-phase | **N**—Natural gas | **A**—Aluminum | **Y**—Yes |
| | | **G**—208 V, three-phase | | | |
| | | **J**—240 V, three-phase | **L**—Liquid propane | | **N**—No |
| | | **K**—480 V, three-phase | | | |

***Notes***

① All liquid-cooled models suitable for "optional" standby backup power only, as dictated by NEC Article 702/NFPA 70. Not suitable for neither "emergency" nor "legally required" applications as dictated by NEC Article 700/701 and NFPA 110.

② Models 70–150 kW include battery. For all other liquid-cooled models, battery must be furnished by others.

③ South Coast Air Quality Management District (CA and MA). Check your local requirements.

## Accessories

### Generator Accessories—Air and Liquid-Cooled Generators

| Description | Catalog Number |
|---|---|
| **General Accessories** | |
| Air-cooled transportation cart | **EGENCART** |
| Bisque paint kit for 2009 model lineup | **EGENPAINT** |
| Display shell—bisque color | **EGENSHELL** |
| Generator fascia for air-cooled models. Bisque color (included as standard on EGENX20A and EGENX22A models) | **EGENFASCIA** |
| **Wireless Remote Monitoring** | |
| Advanced wireless remote monitor w/smart device connectivity. Air-cooled/liquid-cooled generators. 2009 models or newer | **EGENMOBILE** |
| Adapter wire harness kit for EGENMOBILE. Required for liquid-cooled generators only 22–150 kW. 2009 models or newer | **EGENKIT** |
| Basic in-house remote wireless monitor. Compatible with air/liquid-cooled models. 2009 models or newer | **EGENinHOME** |
| Adapter wire harness kit for EGENinHOME. Required for liquid-cooled units only 22–150 kW. 2009 models or newer | **EGENinHOMEKIT** |
| **Cold Weather Kits** | |
| Cold weather kit for all air-cooled generator models (8–20 kW). Battery and crankcase warmer | **6212CH** |
| 22, 27, 36, 45 and 60 kW (2.4 L) cold weather kit | **5630CH** |
| 25 and 30 kW (1.5 L) cold weather kit | **6175CH** |
| 100 and 130 kW (6.8 L) cold weather kit | **5633CH** |
| 48 (5.4 L), 80 (4.6 L) and 70 and 150 kW (6.8 L) cold weather kit | **5632CH** |
| 25 and 30 kW (1.6 L) cold weather kit for models prior to February 2012 | **5629CH** |
| 48 kW (4.2 L) cold weather kit for models prior to February 2012 | **5631CH** |
| **Extreme Cold Weather Kits** | |
| 25 and 30 kW extreme cold weather kit 1.5 L engine | **6174CH** |
| 25 and 30 kW extreme cold weather kit 1.6 L engine (prior to February 2012) | **5615CH** |
| 22, 27, 36, 45 and 60 kW extreme cold weather kit for 2.4 L engine | **5616CH** |
| 48 kW extreme cold weather kit for 5.4 L engine | **6204CH** |
| 48 kW extreme cold weather kit for 4.2 L engine (prior to February 2012) | **5618CH** |
| 70, 100 and 130 kW generator extreme cold weather kit for 6.8 L engine gear drive | **5620CH** |
| 80 kW extreme cold weather kit for 4.6 L engine | **5619CH** |
| 150 kW generator extreme cold weather kit for 6.8 L engine direct drive | **5667CH** |
| Extreme cold weather kit (engine warmer) for air-cooled 8–10 kW, 410/530 cc engines (after April 2010) | **5863CH** |
| Extreme cold weather kit (engine warmer) for air-cooled 14–20 kW, 760/992/999 cc engines (after April 2010) | **5864CH** |
| **Maintenance Kits** | |
| 8 kW generator maintenance kit 410 cc engine. For #EGENX8 model only | **6482CH** |
| 11 kW generator maintenance kit 530 cc engine. For #EGENX11A model only | **6483CH** |
| 16 kW generator maintenance kit, 992 cc engine. For #EGENX16A model only | **6484CH** |
| 20 kW generator maintenance kit, 999 cc engine. For #EGENX20A model only | **6485CH** |
| 22 kW generator maintenance kit, 999 cc engine. For #EGENX22A model only | **6485CH** |
| 8 kW generator maintenance kit 410 cc engine. #EGEN8 vintage model only | **5662CH** |
| 10 kW generator maintenance kit 530 cc engine. #EGEN10 vintage model only | **5663CH** |
| 14 and 17 kW generator maintenance kit, 760/990 cc engine. #EGEN14 and #EGEN17-17A vintage models only | **5664CH** |
| 14 and 17 kW generator maintenance kit, 760/990 cc engine. For #EGENX14 and #EGENX17-17A vintage models only | **6484CH** |
| 20 kW generator maintenance kit, 999 cc engine. #EGEN20A vintage model only | **5665CH** |
| 22 and 27 kW generator maintenance kit, 2.4 L engine | **5656CH** |
| 25 and 30 kW generator maintenance kit, 1.5 L engine | **6176CH** |
| 25 and 30 kW generator maintenance kit, 1.6 L engine (prior to February 2012) | **5655CH** |
| 36 kW generator maintenance kit, 2.4 L engine | **5984CH** |
| 45 kW generator maintenance kit, 2.4 L engine | **6172CH** |
| 48 kW generator maintenance kit, 4.2 L engine | **5658CH** |
| 60 kW generator maintenance kit, 2.4 L engine | **6171CH** |
| 80 kW generator maintenance kit, 4.6 L engine | **5985CH** |
| 70, 100, 130 and 150 kW generator maintenance kit, 6.8 L engine | **5660CH** |

**EGENMOBILE**

**Cold Weather Kits**

**Extreme Cold Weather Kits**

**Maintenance Kits**

## Sizing Guidelines

When selecting the essential circuits that will be switched to "Backup Power," it is important that the sum of the combined circuit loads does not exceed the wattage/amperage capacity of the generator. To help you with your selection of essential circuits, please add up the total wattage of all electrical devices to be connected at one time. This total should NOT be greater than the generator's wattage capacity.

Refer to Eaton Generator Sizing Guide Publication Number TD00405018E and consult with a trained professional.

### Circuit Selection ①②③

| Device | Common Running Watts |
|---|---|
| Air conditioner (12,000 btu) | 1700 |
| Air conditioner (24,000 btu) | 3800 |
| Air Conditioner (40,000 btu) | 6000 |
| Battery charger (20 amp) | 500 |
| Circular saw (6-1/2-inch) | 800–1000 |
| Clothes dryer (electric) | 5750 |
| Clothes dryer (gas) | 700 |
| Clothes washer | 1150 |
| Coffee maker | 1750 |
| Compressor (1 hp) | 2000 |
| Compressor (1/2 hp) | 1400 |
| Compressor (3/4 hp) | 1800 |
| Curling iron | 700 |
| Dehumidifier | 650 |
| Electric blanket | 400 |
| Electric range (per element) | 1500 |
| Electric skillet | 1250 |
| Freezer | 700 |
| Furnace fan (3/5 hp) | 875 |
| Garage door opener | 500–750 |
| Hair dryer | 1200 |
| Hand drill | 250–1100 |
| Iron | 1200 |
| Jet pump | 800 |
| Light bulb | 100 |
| Microwave oven | 700–1000 |
| Milk cooler | 1100 |
| Oil burner on furnace | 300 |
| Oil fired space heater (140,000 btu) | 400 |
| Oil fired space heater (30,000 btu) | 150 |
| Oil fired space heater (85,000 btu) | 225 |
| Radio | 50–200 |
| Refrigerator | 700 |
| Slow cooker | 200 |
| Submersible pump (1 hp) | 2000 |
| Submersible pump (1/2 hp) | 1500 |
| Submersible pump (1-1/2 hp) | 2800 |
| Sump pump | 800–1050 |
| Table saw (10-inch) | 1750–2000 |
| Television | 200–500 |
| Toaster | 1000–1650 |

## Dimensions

Approximate Dimensions in Inches (mm)

### Air-Cooled Standby

| Catalog Number | Length | Width | Height | Weight in Lbs (kg) |
|---|---|---|---|---|
| **EGENX8** | 48.00 (1219.2) | 25.00 (635.0) | 29.00 (736.6) | 360 (163.0) |
| **EGENX11A** | 48.00 (1219.2) | 25.00 (635.0) | 29.00 (736.6) | 373 (169.2) |
| **EGENX16A** | 48.00 (1219.2) | 25.00 (635.0) | 29.00 (736.6) | 437 (198.2) |
| **EGENX20A** | 48.00 (1219.2) | 25.00 (635.0) | 29.00 (736.6) | 451 (204.6) |
| **EGENX22A** | 48.00 (1219.2) | 25.00 (635.0) | 29.00 (736.6) | 476 (216.0) |

### Liquid-Cooled Standby

| Catalog Number | Length | Width | Height | Weight in Lbs (kg) |
|---|---|---|---|---|
| **EGEN22** | 62.00 (1574.8) | 29.00 (736.6) | 34.00 (863.6) | 895 (406.3) |
| **EGEN25** | 63.00 (1600.2) | 30.00 (762.0) | 35.00 (889.0) | 875 (397.3) |
| **EGEN27** | 64.00 (1625.6) | 31.00 (787.4) | 36.00 (914.4) | 891 (404.5) |
| **EGEN30** | 60.00 (1651.0) | 32.00 (812.8) | 37.00 (939.8) | 935 (424.5) |
| **EGEN36** | 77.00 (1955.8) | 34.00 (863.6) | 45.00 (1143.0) | 1683 (764.1) |
| **EGEN45** | 78.00 (1981.2) | 35.00 (889.0) | 46.00 (1168.4) | 1414 (642.0) |
| **EGEN48** | 79.00 (2006.6) | 36.00 (914.4) | 47.00 (1193.8) | 1703 (773.2) |
| **EGEN60** ④ | 80.00 (2032.0) | 37.00 (939.8) | 48.00 (1219.2) | 1650 (749.1) |
| **EGEN70** ④ | 97.00 (2463.8) | 37.00 (939.8) | 48.00 (1219.2) | 2185 (992.0) |
| **EGEN80** ④ | 115.00 (2921.0) | 36.80 (934.7) | 79.00 (2006.6) | 2010 (912.5) |
| **EGEN100** ④ | 116.00 (2946.4) | 36.80 (934.7) | 80.00 (2032.0) | 2705 (1228.1) |
| **EGEN130** ④ | 117.00 (2971.8) | 36.80 (934.7) | 81.00 (2057.4) | 2873 (1304.3) |
| **EGEN150** ④ | 118.00 (2997.2) | 36.80 (934.7) | 82.00 (2082.8) | 2666 (1210.4) |

***Notes***

① The rated wattage of lights can be taken from light bulbs. The rated wattage of tools, appliances and motors can usually be found on a data plate or decal affixed to the device.

② If the appliance, tool or motor does not give wattage, multiply 120 volts times the ampere rating to determine watts (volts x amps = watts) for single-phase only.

③ Some electric motors (induction types) require about three times more watts of power for starting than for running. This surge lasts for only a few seconds. Be sure you allow for this high starting wattage when selecting electrical devices that will be energized by the backup power system:
Figure the watts required to start the largest motor.
Add that to the total running watts of all other connected loads.

④ All weights provided for steel enclosures only.

EGENP8000EX

## Contents

| *Description* | *Page* |
|---|---|
| Portable Generators | |
| Product Selection | **V1-T3-8** |
| Dimensions | **V1-T3-10** |



## Product Description

Whereas permanently installed standby systems are designed for larger homes, small businesses or secondary residences, portable generators are primarily used for smaller homes, essential loads, construction sites, camping, tailgating and wherever portable temporary power is required.

## Application Description

Portable generator systems are primarily used for smaller homes or for construction sites where temporary power is required. Permanently installed standby systems are designed for larger homes, small businesses or secondary residences, such as vacation homes and cabins, that require uninterrupted power for critical loads.

As the name indicates and due to physical size and weight, portable generators can easily be transported from one location to another.

Designed for outdoor use only, common applications vary from homes to camping to construction sites, providing backup power everywhere electrical power is needed.

## Standards and Certifications

- UL Listed

UL Listed

## Catalog Number Selection

### Portable Generators

**EGEN P 8000 E X**

Eaton generator

| Type |
|---|
| **P** = Portable |

| Power Output |
|---|
| **5500** = 5.5 kW |
| **6500** = 6.5 kW |
| **7000** = 7.5 kW |
| **8000** = 8 kW |
| **15000** = 15 kW |
| **17500** = 17.5 kW |

| Startup Method |
|---|
| **Blank** = Manual/recoil only |
| **E** = Electric and/or manual/recoil |

| Model |
|---|
| **Blank** = General purpose |
| **CA** = General purpose "CARB" compliant (CA only) |
| **X** = XG Series |

## Product Selection

### Portable Generators

| | Running Watts | Starting Watts | Engine Displacement/ Type | Startup Method | Fuel Tank Capacity (gal) ① | Approx. Running Time at 1/2 load (hrs) | Battery Included | Outlets Configuration | Warranty Residential/ Commercial (yrs) | Catalog Number |
|---|---|---|---|---|---|---|---|---|---|---|
| **General Purpose (49-State)** | | | | | | | | | | |
| **EGENP5500** | 5500 | 6875 | 389 cc/OHV | Manual | 7.2 | 10 | No | 1 x 30 A L14-30R (twist lock), 2 x 20 A 5-20R duplex | 2/1 Ltd | **EGENP5500** |
| **EGENP6500** | 6500 | 8125 | 389 cc/OHV | Manual | 7.2 | 10 | No | 1 x 30 A L14-30R (twist lock), 2 x 20 A 5-20R duplex | 2/1 Ltd | **EGENP6500** |
| **EGENP6500E** | 6500 | 8125 | 389 cc/OHV | Manual/ electric | 7.2 | 10 | Yes | 1 x 30 A L14-30R (twist lock), 2 x 120 A 5-20R duplex | 2/1 Ltd | **EGENP6500E** |
| **EGENP7500E** | 7500 | 9375 | 420 cc/OHV | Manual/ electric | 8.0 | 12 | Yes | 1 x 30 A L14-30R (twist lock), 2 x 20 A 5-20R duplex | 2/1 Ltd | **EGENP7500E** |
| **EGENP15000E** | 15000 | 22500 | 992 cc/OHVI | Manual/ electric | 16.0 | 12 | Yes | 1 x 50 A 14-50R, 1 x 30 A L14-30R (twist lock), 2 x 30 A L5-30R (twist lock), 1 x 20 A 5-20R duplex, 1 x 20 A GFCI 5-20R duplex | 2/1 Ltd | **EGENP15000E** |
| **EGENP17500E** | 17500 | 26250 | 992 cc/OHVI | Manual/ electric | 16.0 | 10 | Yes | 1 x 50 A 14-50R, 1 x 30 A L14-30R (twist lock), 1 x 30 A L5-30R (twist lock),1 x 20 A 5-20R duplex, 1 x 20 A 5-20R GFCI duplex | 2/1 Ltd | **EGENP17500E** |

***Note***

① Requires gasoline as fuel to operate.

## Portable Generators, continued

| | Running Watts | Starting Watts | Engine Displacement/ Type | Startup Method | Fuel Tank Capacity (gal) ① | Approx. Running Time at 1/2 load (hrs) | Battery Included | Outlets Configuration | Warranty Residential/ Commercial (yrs) | Catalog Number |
|---|---|---|---|---|---|---|---|---|---|---|
| **XG Series** | | | | | | | | | | |
| **EGENP7000EX** | 7000 | 8750 | 407 cc/OHVI | Manual/ electric | 9 | 10 | Yes | 1 x 30 A L14-30R (twist lock), 2 x 20 A GFCI 5-20R duplex | 2/1 Ltd | **EGENP7000EX** |
| **EGENP8000EX** | 8000 | 10000 | 407 cc/OHVI | Manual/ electric | 10 | 10 | Yes | 1 x 30 A L14-30R (twist lock), 2 x 20 A GFCI 5-20R duplex | 2/1 Ltd | **EGENP8000EX** |
| **EGENP10000EX** | 10000 | 12500 | 530 cc/OHVI | Manual/ electric | 10 | 10 | Yes | 1 x 50 A 14-50R, 1 x 30 A L14-30R (twist lock), 1 x 30 A L5-30R (twist Lock), 2 x 20 A GFCI 5-20R duplex | 2/1 Ltd | **EGENP10000EX** |
| **CARB ② Compliant (Required in California Only)** | | | | | | | | | | |
| **EGENP5500CA** | 5500 | 6875 | 389 cc/OHV | Manual | 7.2 | 10 | No | 1 x 30 A L14-30R (twist lock), 2 x 20 A GFCI 5-20R duplex | 2/1 Ltd | **EGENP5500CA** |
| **EGENP6500CA** | 6500 | 8125 | 389 cc/OHV | Manual | 7.2 | 10 | No | 1 x 30 A L14-30R (twist lock), 2 x 120 A 5-20R duplex | 2/1 Ltd | **EGENP6500CA** |

***Notes***

① Requires gasoline as fuel to operate.

② California Air Resources Board.

## Dimensions

Approximate Dimensions in Inches (mm)

### Portable Generators



| Catalog Number | Length | Width | Height | Weight Lbs (kg) |
|---|---|---|---|---|
| **EGENP5500** | 27.25 (692.2) | 27.00 (685.8) | 25.00 (635.0) | 171.0 (77.6) |
| **EGENP6500** | 27.25 (692.2) | 27.00 (685.8) | 25.00 (635.0) | 175.0 (79.5) |
| **EGENP6500E** | 27.25 (692.2) | 27.00 (685.8) | 25.00 (635.0) | 186.0 (84.4) |
| **EGENP7500E** | 27.25 (692.2) | 27.00 (685.8) | 25.00 (635.0) | 191.5 (86.9) |
| **EGENP15000E** | 48.50 (1231.9) | 31.00 (787.4) | 39.50 (1003.3) | 363.0 (164.8) |
| **EGENP17500E** | 48.50 (1231.9) | 31.00 (787.4) | 39.50 (1003.3) | 390.0 (177.1) |
| **EGENP7000EX** | 31.00 (787.4) | 25.50 (647.7) | 28.00 (711.2) | 245.0 (111.2) |
| **EGENP8000EX** | 31.00 (787.4) | 25.50 (647.7) | 28.00 (711.2) | 235.0 (106.7) |
| **EGENP10000EX** | 30.00 (762.0) | 29.50 (749.3) | 31.00 (787.4) | 300.0 (136.2) |
| **EGENP5500CA** | 27.25 (692.2) | 27.00 (685.8) | 25.00 (635.0) | 170.9 (77.6) |
| **EGENP6500CA** | 27.25 (692.2) | 27.00 (685.8) | 25.00 (635.0) | 177.0 (80.3) |

**Residential Automatic Transfer Switches**

## Contents


| *Description* | *Page* |
|---|---|
| Automatic Transfer Switches | |
| Standards and Certifications | **V1-T3-12** |
| Catalog Number Selection | **V1-T3-12** |
| Product Selection | **V1-T3-13** |
| ATS Ready Loadcenter | **V1-T3-14** |
| Dimensions | **V1-T3-15** |




## Product Description

### 50, 100, 150, 200 and 400 A Fully Automatic

All Eaton automatic transfer switches (ATS) monitor utility and generator voltages and will automatically connect to the appropriate source of power. Eaton offers two types of automatic transfer switches to suit your personal backup power needs—the standard ATS EGSX series with load shedding capabilities and the Green ATS EGSU series that provides a truly active load management solution.

### Green Line of Automatic Transfer Switches

With the rising cost of commodities and fuel in today's economy, consumers are concerned with maximizing the value of their purchases.

Electrical loads are now intelligently managed with Eaton's Green Line of automatic transfer switches. The active load management inside each Green ATS allows the consumer to use 100% of the power rated output of the generator and/or use a smaller generator, reducing upfront installation costs and saving on ongoing fuel consumption costs.

As a part of Eaton's commitment to quality, every Green ATS, at no extra cost, will ship with a CHSPT2ULTRA whole surge protector, which will help prevent potential damage to valued electronics caused by power surges in the utility line.

## Application Description

### 50, 100, 150, 200 and 400 A Switches

100, 200 and 400 A switches are capable of "whole house" power transfer in residential/small business applications.

**50 A—Indoor Installation—Selected Load Pre-Wired**

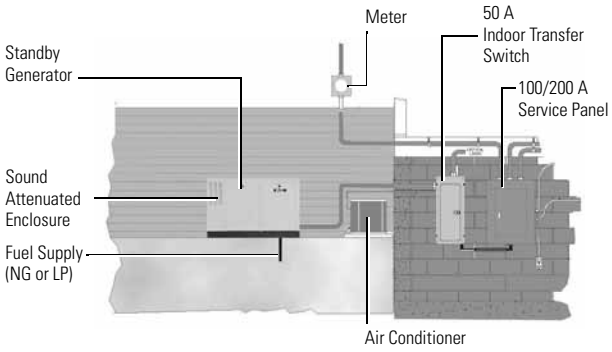


**100/200 A—Outdoor Installation—Whole House Pre-Wired**

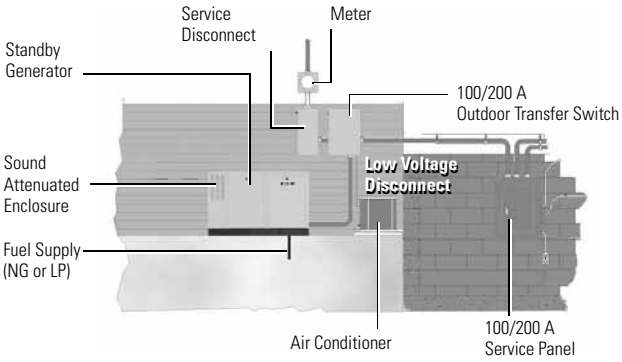

## Standards and Certifications

- UL 1008 listed



Listed

## Catalog Number Selection

### Standard Automatic Transfer Switches—EGSX Series

**E GSX 200 __ NSEA**

| Manufacturer |
|---|
| Eaton |

| Type |
|---|
| Generator transfer switch EGSX Series |

| Ampere Rating |
|---|
| **50** = 50 A |
| **100** = 100 A |
| **150** = 150 A |
| **200** = 200 A |
| **400** = 400 A |

| Loadcenter (CH Type, Integral) |
|---|
| **Blank** = None |
| **L12** = 12 circuits N1 |
| **L12R** = 12 circuits N3R |
| **L24R** = 24 circuits N3R |

| Service Entrance Rated |
|---|
| **NSEA** = Service entrance (normal source only) |
| **A** = Non-service entrance |

### Green Automatic Transfer Switches—EGSU Series

**E GSU 200 __ NSE ACA**

| Manufacturer |
|---|
| Eaton |

| Type |
|---|
| Generator universal transfer switch EGSU "Green" Series |

| Ampere Rating |
|---|
| **100** = 100 A |
| **150** = 150 A |
| **200** = 200 A |
| **400** = 400 A |

| Loadcenter (CH Type, Integral) |
|---|
| **Blank** = None |
| **L24** = 24 circuits |

| Service Entrance Rated |
|---|
| **NSE** = Service entrance (normal source only) |
| **Blank** = Non-service entrance |

| Load Management |
|---|
| **ACA** = Active load management |

## Product Selection

EGSX50L12R

### Standard Automatic Transfer Switches ①

| Ampere Rating | Voltage | Service Entrance Rated | No. of Load Shed Contacts | Contactor Wire Size Range(s) | No. of Cables per Phase | Withstand Current (rms) at 240 Vac | No. of Circuits Included ② | Frequency (Hz) | Enclosure Type | Most Common Generator Sizes (kW) ③ | Catalog Number |
|---|---|---|---|---|---|---|---|---|---|---|---|
| 50 | 120/240 | No | 2 | #14–#6 | 1 | 5000 | 12 | 50/60 | NEMA 1 (indoor) | 8, 11 | **EGSX50L12** |
| 50 | 120/240 | No | 2 | #14–#6 | 1 | 5000 | 12 | 50/60 | NEMA 3R (outdoor) | 8, 11 | **EGSX50L12R** |
| 100 | 120/240 | No | 2 | #14–#2/0 | 1 | 10,000 | — | 50/60 | NEMA 3R (outdoor) | 8, 11, 16 | **EGSX100A** |
| 100 | 120/240 | Yes | 2 | #14–#2/0 | 1 | 25,000 | — | 50/60 | NEMA 3R (outdoor) | 8, 11, 16 | **EGSX100NSEA** |
| 100 | 120/240 | No | 2 | #14–#2/0 | 1 | 10,000 | 24 | 50/60 | NEMA 3R (outdoor) | 8, 11, 16 | **EGSX100L24RA** |
| 150 | 120/240 | Yes | 2 | #4–300 kcmil | 1 | 25,000 | — | 50/60 | NEMA 3R (outdoor) | 16, 20, 22 | **EGSX150NSEA** |
| 200 | 120/240 | No | 2 | #4–300 kcmil | 1 | 10,000 | — | 50/60 | NEMA 3R (outdoor) | 16, 20, 22 | **EGSX200A** |
| 200 | 120/240 | Yes | 2 | #4–300 kcmil | 1 | 25,000 | — | 50/60 | NEMA 3R (outdoor) | 16, 20, 22 | **EGSX200NSEA** |
| 400 | 120/240 | Yes | 2 | 750 kcmil–2<br>300 kcmil–1/0 | 1/2 | 35,000 | — | 50/60 | NEMA 3R (outdoor) | >22 | **EGSX400NSEA** |

EGSU200NSEACA

### Green Automatic Transfer Switches ④—Featuring Active Load Management Technology

| Ampere Rating | Voltage | Service Entrance Rated | Contactor Wire Size Range(s) | No. of Cables per Phase | Withstand Current (rms) at 240 Vac | No. of Circuits Included ② | Frequency (Hz) | Enclosure Type | Most Common Generator Sizes (kW) ③ | Catalog Number ⑤ |
|---|---|---|---|---|---|---|---|---|---|---|
| 100 | 120/240 | No | #14–#2/0 | 1 | 10,000 | — | 50/60 | NEMA 3R (outdoor) | 8, 11, 16 | **EGSU100ACA** |
| 100 | 120/240 | Yes | #14–#2/0 | 1 | 25,000 | — | 50/60 | NEMA 3R (outdoor) | 8, 11, 16 | **EGSU100NSEACA** |
| 100 | 120/240 | No | #14–#2/0 | 1 | 10,000 | 24 | 50/60 | NEMA 3R (outdoor) | 8, 11, 16 | **EGSU100L24RACA** |
| 150 | 120/240 | Yes | #4–300 kcmil | 1 | 25,000 | — | 50/60 | NEMA 3R (outdoor) | 16, 20, 22 | **EGSU150NSEACA** |
| 200 | 120/240 | No | #4–300 kcmil | 1 | 10,000 | — | 50/60 | NEMA 3R (outdoor) | 16, 20, 22 | **EGSU200ACA** |
| 200 | 120/240 | Yes | #4–300 kcmil | 1 | 25,000 | — | 50/60 | NEMA 3R (outdoor) | 16, 20, 22 | **EGSU200NSEACA** |
| 400 | 120/240 | Yes | 750 kcmil–2<br>300 kcmil–1/0 | 1/2 | 35,000 | — | 50/60 | NEMA 3R (outdoor) | >22 | **EGSU400NSEACA** |

***Notes***

① Standard ATS "EGSX" Series compatible with Eaton generators only.
② Uses CH type circuit breakers.
③ For reference only. Generator size must be determined with proper/actual load calculations.
④ UNIVERSAL ATS: compatible with any single-phase, 120/240 V generator brand.
⑤ Whole house surge Cat. No. CHSPT2ULTRA included in every Green ATS "EGSU" Series.

## ATS Ready Loadcenter

From the far-reaching power failures brought on by hurricanes and snow/ice storms, to the increasing power outage concerns and an aging electrical infrastructure, backup power is more important than ever. Eaton's ATS Ready loadcenter addresses future backup power needs by enabling a fast, efficient installation of an automatic transfer switch kit to convert from utility power to generator power.

The ATS Ready loadcenter gives homebuilders and electrical contractors the flexibility to install a generator ready system or to install a loadcenter and easily add an ATS in the future. Backup power had never been that versatile before.

***ATS Ready Loadcenter Features***

- CH Premium Type 200 A single-phase MCB 36-circuit loadcenter
- 50 A ATS "EGSX" type kit for factory or field installation (compatible with Eaton generators only)
- 22 circuits for non-essential loads and 14 circuits for essential backup power loads
- Versatile, space-saving design
- For use with 8 or 11 kW air-cooled generators
- CH cover included
- Lifetime warranty on CH loadcenter and breakers
- NEMA 1 design
- UL Listed

### ATS Ready Loadcenter

| | Description | Catalog Number |
|---|---|---|
| **CH36B200EGP** | ATS Ready loadcenter<br>Kit CHEGSX50KIT must be ordered separately<br>Loadcenter only. Includes provision for ATS kit | **CH36B200EGP** |
| **CHEGSX50KIT** | ATS "EGSX" kit for ATS Ready loadcenter<br>Field-installable automatic transfer switch kit<br>ATS Ready loadcenter CH36B200EGP must be ordered separately<br>Intuitive, easy installation<br>Compatible with Eaton generators only | **CHEGSX50KIT** |
| **CH36B200EGPK** | ATS Ready LC with factory-installed ATS kit<br>Factory assembled<br>Compatible with Eaton generator only. Generator needed to complete backup power system<br>Recommended Eaton generators models:<br>8/7 kW–Catalog #EGENX8<br>11/10 kW–Catalog #EGENX11A | **CH36B200EGPK** |

## Dimensions

Approximate Dimensions in Inches (mm)

### Automatic Transfer Switches

| Catalog Number | Width | Height | Depth | Weight Lbs (kg) |
|---|---|---|---|---|
| **EGSX50L12** | 14.25 (362.0) | 21.00 (533.4) | 4.00 (101.6) | 25 (11.33) |
| **EGSX50L12R** | 14.25 (362.0) | 21.00 (533.4) | 6.00 (152.4) | 29 (13.15) |
| **EGSX100A** | 14.46 (367.3) | 16.87 (428.5) | 5.32 (135.1) | 25 (11.33) |
| **EGSX100NSEA** | 14.46 (367.3) | 16.87 (428.5) | 5.32 (135.1) | 28 (12.70) |
| **EGSX100L24RA** | 14.46 (367.3) | 29.33 (744.0) | 5.32 (135.1) | 38 (17.24) |
| **EGSX200A** | 14.46 (367.3) | 25.08 (637.0) | 5.25 (133.4) | 35 (15.87) |
| **EGSX150NSEA** | 14.46 (367.3) | 29.20 (741.7) | 5.32 (135.1) | 45 (20.41) |
| **EGSX200NSEA** | 14.46 (367.3) | 29.20 (741.7) | 5.32 (135.1) | 45 (20.41) |
| **EGSU100L24RACA** | 14.46 (367.3) | 29.33 (745.0) | 5.32 (135.1) | 38 (17.24) |
| **EGSU100ACA** | 14.46 (367.3) | 16.87 (428.5) | 5.32 (135.1) | 25 (11.33) |
| **EGSU100NSEACA** | 14.46 (367.3) | 16.87 (428.5) | 5.32 (135.1) | 28 (12.70) |
| **EGSU150NSEACA** | 14.46 (367.3) | 29.20 (741.7) | 5.32 (135.1) | 45 (20.41) |
| **EGSU200ACA** | 14.46 (367.3) | 25.08 (637.0) | 5.25 (133.4) | 35 (15.88) |
| **EGSU200NSEACA** | 14.46 (367.3) | 29.20 (741.7) | 5.32 (135.1) | 45 (20.41) |
| **EGSU400NSEACA** | 23.14 (587.8) | 35.55 (903.0) | 10.00 (254.0) | 120 (54.43) |
| **CH36B200EGPK** | 14.31 (363.5) | 47.50 (1206.5) | 3.88 (98.6) | 40 (18.14) |

**All Panels are Manufactured in the USA and Meet UL 1008**

## Contents


| *Description* | *Page* |
|---|---|
| Manual Transfer Switches | |
| Standards and Certifications | **V1-T3-17** |
| Reference Information | **V1-T3-17** |
| Product Selection | **V1-T3-18** |
| Technical Data and Specifications | **V1-T3-19** |
| Dimensions | **V1-T3-19** |


Learn Online

## Product Description

A manual transfer switch is a device that is mounted next to the loadcenter (distribution panel) in the home or small business. The manual transfer switch is used in conjunction with a portable backup power generator and serves the purpose of turning selected circuits on and off during a power outage. The transfer switch panel allows the owner to start up a generator to restore power to critical circuits when utility power is not available.

The owner designates which circuits are critical, such as the refrigerator and certain lights. Sometimes called emergency power panels or emergency generator panels, manual transfer switch panels provide the homeowner or small business owner with a safe and easy way to continue using electrical appliances when the utility power is unavailable temporarily.

## Application Description

Manual transfer switches are most often used in residential, agricultural and light commercial applications. Comfort and safety are key concerns of many homeowners who are dependent on an uninterrupted supply of electricity.

The increase in our dependence on power is due in part to the popularity of home offices and in-home health care. Various heavily populated regions of the United States experience periodic power outages due to extreme weather conditions, such as ice and snowstorms, heat waves, tornadoes or hurricanes. These regions that include the Pacific Northwest, Atlantic Coast and the Gulf Coast are the strongest markets for portable generators and manual transfer switches.

## Features, Benefits and Functions

Eaton offers two manual transfer switch backup power solutions:

- Manual transfer switches
- Generator panels

### Manual Transfer Switches

- Panel and components sold separately
- Hardwired generator connection
- Ideal for new construction/ larger loads
- Sturdy copper bus construction
- Uses CH and CHT circuit breaker types (sold separately)
- Mechanically interlocked main disconnects to prevent paralleling of normal and emergency power source
- Indoor and outdoor designs available

***Manual Transfer Switch Indoor Design***

***Manual Transfer Switch Indoor/Outdoor Design***

### Generator Panels

- Mechanically interlocked main disconnects prevent paralleling of normal and emergency power source
- Panel and components sold separately
- Integral plug-in generator connection (power inlet box)
- All circuit breakers are included—switching duty rated
- Includes dual wattmeters for load balancing
- Indoor and outdoor designs available

***Generator Panel Indoor Design***

***Generator Panel Outdoor Design***

## Standards and Certifications

- UL 67 listed
- UL 1008 listed

Listed

## Reference Information

### Cross-Reference

| Watts | Number of Circuits | Ampere Rating | Catalog Number Eaton | Gen/Tran ① | EmerGen ① | Square D | Generac ② |
|---|---|---|---|---|---|---|---|
| 5000 | 4–8 | 30 | **CH48GEN3060R** | — | — | QO48M30DSGP | — |
| 15,000 | 8–16 | 60 | **CH816GEN6060** | — | — | QO48M60DSGP | — |
| 5000 | 6 | 20 | **CH6EGEN2060** | 20216 | 6-5000 | — | — |
| 5000 | 6 | 20 | **CH6EGEN2060R** | R20216 | 6-5000 + RTE657 | — | — |
| 5000 | 6 | 20 | **CH6EGEN2060SU** | — | — | — | — |
| 5000 | 6 | 20 | **CH6EGEN2060RSU** | — | — | — | — |
| 7500 | 10 | 30 | **CH10EGEN3060** | 302110-20 | 10-7500 | — | — |
| 7500 | 10 | 30 | **CH10EGEN3060R** | R30211-20 | 10-7500 + RTE1075 | — | — |
| 7500 | 10 | 30 | **CH10EGEN3060SUR** | — | — | — | — |
| 7500 | 10 | 30 | **CH10EGEN3060RSU** | — | — | — | — |
| 7500 | 10 | 30 | **CH10GEN5030SN** | — | — | — | — |
| 7500 | 10 | 30 | **CH10GEN5030RSN** | — | — | — | — |
| 12,000 | 10 | 50 | **CH10GEN5050SN** | — | — | — | — |
| 12,000 | 10 | 50 | **CH10GEN5050RSN** | — | — | — | — |

***Notes***

① Gen/Trans device is not supplied with a power cord.

② Generac device is 7200 maximum watts on six-circuit device and 12,000 maximum watts on 10-circuit device.

## Product Selection

### Manual Transfer Switches and Generator Panels Selection

| Enclosure Type | Watts | Number of Circuits | Ampere Rating | Main/ Emergency Ampere Rating | Feeder Breakers | Included Accessories | Catalog Number |
|---|---|---|---|---|---|---|---|
| **Standard Manual Transfer Switch** | | | | | | | |
| NEMA 3R | 5000 | 4–8 | 30 | Provision | Provision | None | **CH48GEN3060R** |
| NEMA 1 | 10,000 | 8–16 | 60 | Provision | Provision | None | **CH816GEN6060** |
| **Generator Panel** | | | | | | | |
| NEMA 1 | 5000 | 6 | 20 | 60/20 | 5–1P151–1P20 | None | **CH6EGEN2060** |
| NEMA 3R | 5000 | 6 | 20 | 60/20 | 5–1P151–1P20 | None | **CH6EGEN2060R** |
| NEMA 1 | 5000 | 6 | 20 | 60/20 | 5–1P151–1P20 | Two-pole surge protector | **CH6EGEN2060SUR** |
| NEMA 3R | 5000 | 6 | 20 | 60/20 | 5–1P151–1P20 | Two-pole surge protector | **CH6EGEN2060RSU** |
| NEMA 1 | 7500 | 10 | 30 | 60/30 | 6–1P152–1P2012P30 | None | **CH10EGEN3060** |
| NEMA 3R | 7500 | 10 | 30 | 60/30 | 6–1P152–1P2012P30 | None | **CH10EGEN3060R** |
| NEMA 1 | 7500 | 10 | 30 | 60/30 | 7–1P152–1P2012P30 | Two-pole surge protector | **CH10EGEN3060SUR** |
| NEMA 3R | 7500 | 10 | 30 | 60/30 | 7–1P152–1P2012P30 | Two-pole surge protector | **CH10EGEN3060RSU** |
| **Switched Neutral Manual Transfer Switch** | | | | | | | |
| NEMA 1 | 7500 | 10 | 30 | 50/30 | 6–1P15, 2–1P20, 1–2P30 | None | **CH10GEN5030SN** |
| NEMA 3R | 7500 | 10 | 30 | 50/30 | 6–1P15, 2–1P20, 1–2P30 | None | **CH10GEN5030RSN** |
| NEMA 1 | 12,000 | 10 | 50 | 50/50 | 6–1P15, 2–1P20, 1–2P30 | None | **CH10GEN5050SN** |
| NEMA 3R | 12,000 | 10 | 50 | 50/50 | 6–1P15, 2–1P20, 1–2P30 | None | **CH10GEN5050RSN** |

### Power Inlet Boxes

| Description | Ampere Rating | Voltage | Catalog Number |
|---|---|---|---|
| Flush flange kit (for use with generator panel only) | — | 120/240 V | **CHEGENFKIT** |
| Power inlet box | 20 | 120/240 V | **EGSPIB20** |
| Power inlet box | 30 | 120/240 V | **EGSPIB30** |
| Power inlet box | 50 | 120/240 V | **EGSPIB50** |

## Warranty

### Manual Transfer Switch

- 15-year loadcenter warranty
- Lifetime branch breaker warranty

### Generator Panel

- 15-year loadcenter warranty
- Lifetime branch breaker warranty

## Technical Data and Specifications

- 10,000 AIC rating
- Switching devices must be circuit breakers
- Manual transfer switch must be supplied with neutral and ground
- Power inlet box must be connected to a circuit breaker for generator protection

### Installation Diagrams

#### Manual Transfer Switches—Indoor Installation Diagram

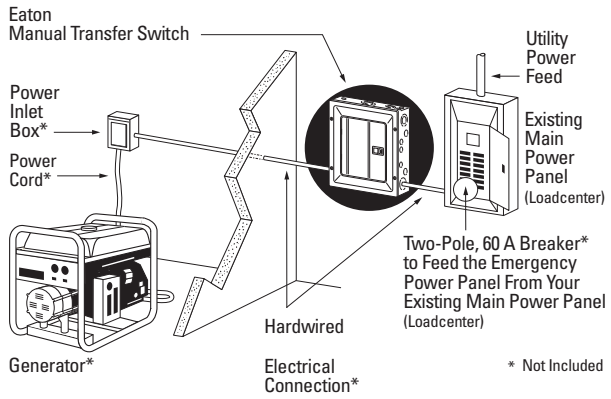


#### Generator Panels—Indoor Installation Diagram

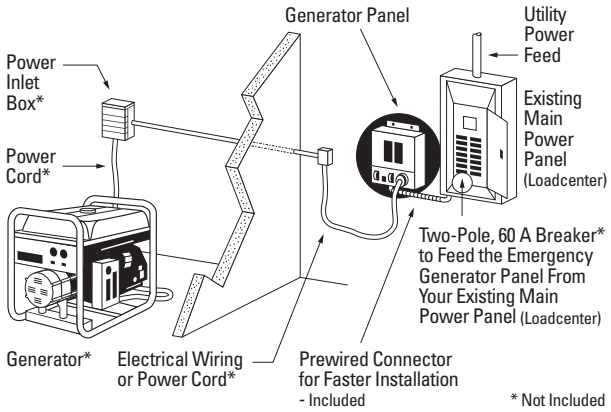


#### Manual Transfer Switches—Outdoor Installation Diagram

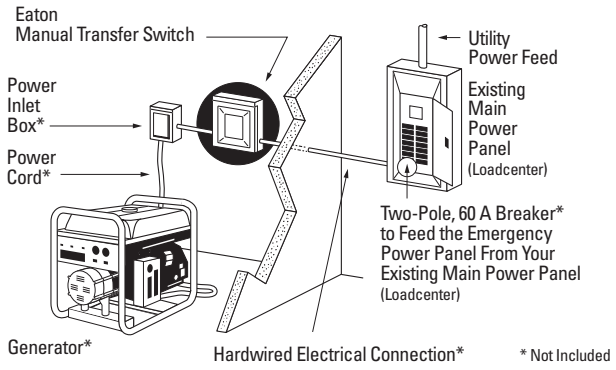


#### Generator Panels—Outdoor Installation Diagram

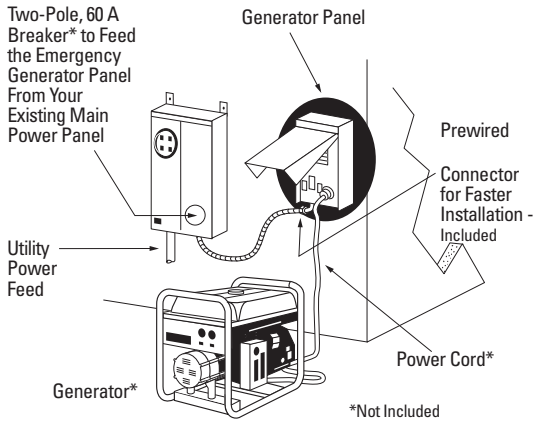


## Dimensions

Approximate Dimensions in Inches (mm)

### Manual Transfer Switch

| Enclosure Type | Height | Width | Depth | Weight Lbs (kg) |
|---|---|---|---|---|
| NEMA 1 | 16.75 (425.5) | 14.31 (363.5) | 3.88 (98.5) | 25 (11) |
| NEMA 3R | 13.00 (330.2) | 11.00 (279.4) | 3.56 (90.4) | 14 (6) |

### Generator Panel

| Enclosure Type | Height | Width | Depth | Weight Lbs (kg) 6-Circuit | Weight Lbs (kg) 10-Circuit |
|---|---|---|---|---|---|
| NEMA 1 | 13.23 (336.0) | 11.41 (289.8) | 4.10 (104.1) | 24 (11) | 26 (12) |
| NEMA 3R | 17.12 (434.8) | 9.45 (240.0) | 7.16 (181.9) | 29 (13) | 31 (14) |

Group Metering and
Meter Breaker Family

**4.1 Single Meter Sockets**
Product Description . . . . . V1-T4-2

**4.2 Commercial Lever Bypass Sockets**
Product Description . . . . . V1-T4-10

**4.3 Multiple Position Horizontal Ganged Sockets**
Product Description . . . . . V1-T4-18

**4.4 Instrument Rated Sockets**
Product Description . . . . . V1-T4-25

**4.5 Residential Pedestals**
Product Description . . . . . V1-T4-27

**4.6 Accessories and Cross-Reference**
Product Description . . . . . V1-T4-29

**4.7 Mechanical Lugs**
Product Description . . . . . V1-T4-34

**4.8 Communications Grounding Device (NEC 250.94)**
Product Description . . . . . V1-T4-35

**4.9 Meter Breakers**
Residential Meter Breakers . . . . . V1-T4-37
Non-EUSERC Combination Service Entrance Devices 100–200 A Styles V1-T4-39
Meets EUSERC Requirements Service Entrance Devices 100–225 A . V1-T4-48
West Coast All-In-One Design . . . . . V1-T4-59
Mechanical Interlock Cover . . . . . V1-T4-65
House Panels . . . . . V1-T4-75
Commercial Safety Sockets . . . . . V1-T4-83
CH Style Renovation Solutions . . . . . V1-T4-86
Aluminum Meter Breakers . . . . . V1-T4-87

**4.10 Group Metering**
Systems for Residential and Commercial Applications . . . . . V1-T4-88
Meter Packs . . . . . V1-T4-90
Type CCV 120/240 V Tenant Main Circuit Breaker . . . . . V1-T4-95
Type CV 120/240 V Tenant Main Circuit Breaker . . . . . V1-T4-96
Meter Packs—1MP, 1MM and 3MM Main Tenant Circuit Breakers . . . V1-T4-98
Main Service Modules . . . . . V1-T4-101
Surge Metering . . . . . V1-T4-115
Group Metering Inline Current Transformer Cabinets . . . . . V1-T4-116
Residential Meter Stacks . . . . . V1-T4-118
1MP, 1MM and 3MM Main Tenant Circuit Breakers . . . . . V1-T4-127
Phase Balanced Stack . . . . . V1-T4-128
Commercial Meter Stack Modules . . . . . V1-T4-129
35MM, 37MM, 35SS and 37SS Main Tenant Circuit Breakers . . . . . V1-T4-136


Learn
Online

Single Meter Sockets

## Contents


| *Description* | *Page* |
|---|---|
| Features and Benefits | **V1-T4-3** |
| Catalog Number Selection | **V1-T4-3** |
| Product Selection | **V1-T4-4** |
| Dimensions | **V1-T4-8** |


## Product Description

### Single-Phase Three-Wire and Three-Phase Four-Wire 600 Vac Single Meter Sockets

All Eaton sockets are rated 600 Vac maximum and either 100, 200 or 320 A continuous. All have a minimum short-circuit rating of 10,000 rms symmetrical amperes (watthour meter is not included in rating).

All single meter sockets are UL labeled and are supplied in surface mounted outdoor enclosures. Confirm local utility acceptance prior to order entry.

## Features and Benefits

### Single Meter Sockets

| Features | Benefits |
|---|---|
| Block assembly base exceeds 400 in-lbs of torque | Provides durability under the most extreme installation circumstances |
| One-piece, die-run enclosure | Eliminates tampering and extends product life |
| High visibility Eaton name embossed on cover | Company identity and brand preference |
| Knockouts are installer friendly | Labor savings, less time needed for removing knockouts |
| Oversized 7/8-inch diameter, heavy-duty, steel lug screws | Stronger connection component facilitates a reliable wire termination |
| Slide-nuts are captive | Allow for ease in installation of conductors and eliminates lost components |
| Horn bypass kit is field installable by changing out slide nut | Less inventory required and field modifications are simple |
| Integral triplex or quadplex ground extruded in neutral lug | One piece for terminating incoming/outgoing neutral conductors, which increases integrity of connections |
| 100% plated bridge with 4-point mounting | Zinc chromate plated to provide superior corrosion resistance |
| kAIC rating | Tested and UL listed up to 200 kAIC rating with specified overcurrent protection devices |
| Provides a complete Eaton residential solution | Adding meter sockets to the already existing (loadcenter, surge, breakers, generators and AC disconnect) product lines that we already provide, makes Eaton a one-stop shop for our customers residential and light commercial needs |
| Copper-plated alloy jaws with reinforcing spring | Steel reinforcing springs used in all socket jaws to maintain electrical connections |

## Catalog Number Selection

### Single Meter Sockets RS Group

**UT RS 2 0 2 B CH**

**Note:** The "U" prefix is always used first followed by other prefixes required in alphabetical order.

**Standard Prefixes**

- **A** = Aluminum enclosure
- **B** = Barrel lock provision, for an exposed INNER-TITE® or Brooks barrel lock; unit includes an internal lock receiver bracket
- **F** = Barrel Lock with guard provision, for a lock guard INNER-TITE or Brooks barrel lock; unit includes an internal lock receiver bracket
- **G** = Grounded fifth terminal (9 o'clock position)
- **H** = Horn bypass
- **I** = Inhibitor installed in wire connectors
- **M** = Temporary meter cover (waxed cardboard)
- **N** = No sealing ring (applies only to ring style sockets)
- **R** = Ring style socket
- **S** = Aluminum screw type sealing ring (applies only to ring style sockets)
- **T** = Grounding connector (#14–#2 Cu) for triplex ground
- **TT** = Two grounding connectors (#14–#2 Cu) for quadplex ground
- **U** = UL Underwriters Laboratories label
- **Z** = 5/16-inch hex head connector screw in place of slotted (100 A only)

**Product Group**

- **RS** = Residential service, single position
- **2R-6R** = Residential service, multiple position
- **2H-6H** = Commercial or residential service, multiple position
- **H** = Commercial or residential service, single position

**Ampere Rating**

- **1** = 100 A
- **2** = 200 A
- **5** = 150 A

**Service Design**

- **0** = Overhead
- **1** = Combination overhead/underground
- **2** = Underground, side wired
- **3** = Combination overhead/underground, side wired

**Maximum Conductor (Line and Load)**

- **0** = 0.38-inch stud connectors
- **1** = #2/0 connectors
- **2** = #250 kcmil connectors
- **3** = #350 kcmil connectors

**Standard Suffixes**

- **A** = Solid top
- **B** = Small hub opening
- **C** = Small hub closing plate mounted
- **L** = 1.25-inch (31.8 mm) hub mounted
- **M** = 1.50-inch (38.1 mm) hub mounted
- **N** = 2.00-inch (50.8 mm) hub mounted
- **P** = 2.50-inch (63.5 mm) hub mounted
- **T** = Large hub opening hub
- **U** = Large hub cover plate hub mounted
- **V** = 2.50-inch (63.5 mm) large hub mounted
- **Q** = 3.00-inch (76.2 mm) large hub mounted
- **R** = 3.50-inch (88.9 mm) large hub mounted
- **S** = 4.00-inch (101.6 mm) large hub mounted
- **Z** = Large to small hub adapter mounted

## Product Selection

URS212ACH

### Residential Ringless Type Cover

| Ampere Rating | Jaws | Service | Bypass | Connections Line | Load | Opening, Hub or Closure Plate | Catalog Number |
|---|---|---|---|---|---|---|---|
| 200 | 4 | UG | — | 3/8-inch studs | 3/8-inch studs | Solid top | **UTRS240ACH** |
| 200 | 4 | OH/UG | — | 3/8-inch studs | 3/8-inch studs | 3-5/16 hub cover plate | **UTRS2303CCH** |
| 200 | 4 | UG | — | #8–350 kcmil | #8–350 kcmil | Solid top | **UTRS223ACH** |
| 200 | 4 | UG | — | 3/8-inch studs | 3/8-inch studs | Solid top | **UTRS220ACH** |
| 200 | 4 | OH/UG | — | #8–350 kcmil | #8–350 kcmil | 3-5/16 cover plate | **UTRS213CFLCH** |
| 200 | 4 | OH/UG | — | #8–350 kcmil | #8–350 kcmil | 3-5/16 hub cover plate | **UTRS213CEPCH** |
| 200 | 4 | OH/UG | — | #6–350 kcmil | #6–350 kcmil | 3-5/16 hub cover plate | **UGTRS213CE** |
| 200 | 4 | OH/UG | — | #6–350 kcmil | #6–350 kcmil | 3-5/16 hub cover plate | **UTRS213CE** |
| 200 | 4 | OH/UG | — | #6–350 kcmil | #6–350 kcmil | 3-5/16 hub opening | **UATRS213BCH** |
| 200 | 4 | OH/UG | — | #6–350 kcmil | #6–350 kcmil | 3-5/16 hub opening | **URS213BCH** |
| 200 | 4 | OH/UG | — | #6–350 kcmil | #6–350 kcmil | 3-5/16 hub opening | **UTRS213BE** |
| 200 | 4 | UG | — | #8–350 kcmil | #8–350 kcmil | Solid top | **UTRS213AFLCH** |
| 200 | 4 | UG | — | #8–350 kcmil | #8–350 kcmil | Solid top | **UTRS213ACH** |
| 200 | 4 | OH/UG | Horn | #8–350 kcmil | #8–350 kcmil | 3-5/16 hub opening | **UTRS2138BCH** |
| 200 | 4 | OH/UG | — | #8–250 kcmil | #8–250 kcmil | Solid top | **UTRS212ACH** |
| 200 | 4 | OH/UG | — | #8–250 kcmil | #8–250 kcmil | 3-5/16 cover plate | **UTRS212CCH** |
| 200 | 4 | OH/UG | — | #8–250 kcmil | #8–250 kcmil | 3-5/16 cover plate | **UTRS212CFLCH** |
| 200 | 4 | OH/UG | — | #8–250 kcmil | #8–250 kcmil | 3-5/16 hub opening | **UTRS212BCH** |
| 200 | 4 | OH | — | #8–250 kcmil | #8–250 kcmil | 2-inch bolt-on hub | **UTRS202NCH** |
| 200 | 4 | OH | — | #8–250 kcmil | #8–250 kcmil | Small hub opening | **UATRS202BFLCH** ① |
| 200 | 4 | OH/UG | — | #8–250 kcmil | #8–250 kcmil | 3-5/16 cover plate | **UTRS232CCH** |
| 200 | 4 | OH | — | #8–2/0 cu/al | #8–2/0 cu/al | 3-5/16 hub opening | **UTRS202BCH** |
| 200 | 4 | OH/UG | — | #8–250 kcmil | #8–250 kcmil | Solid top | **URS212ACH** |
| 200 | 4 | OH | — | #8–250 kcmil | #8–250 kcmil | 2-inch bolt-on hub | **URS202NCH** |
| 200 | 5 | OH | Horn | #8–250 kcmil | #8–250 kcmil | 3-5/16 hub opening | **URS202BDQCH** |
| 200 | 4 | OH/UG | Horn | #8–350 kcmil | #8–350 kcmil | 3-5/16 hub cover plate | **UFHTRS213CCH** ② |
| 200 | 4 | OH/UG | Horn | #8–350 kcmil | #8–350 kcmil | 3-5/16 hub opening | **UHTTRS213BCH** |
| 200 | 4 | OH/UG | Horn | #8–350 kcmil | #8–350 kcmil | 3-5/16 hub cover plate | **UHTTRS213CCH** |
| 200 | 4 | OH | Horn | #8–250 kcmil | #8–250 kcmil | 3-5/16 hub opening | **UHTTRS202BCH** |
| 200 | 5 | OH/UG | Horn | #8–350 kcmil | #8–350 kcmil | 3-5/16 hub cover plate | **UHTRS233CCH** |
| 200 | 4 | UG | Horn | #8–350 kcmil | #8–350 kcmil | Solid top | **UHTRS223ARHCH** |
| 200 | 4 | UG | Horn | #8–350 kcmil | #8–350 kcmil | Solid top | **UFHTRS223ACH** |
| 200 | 5 | UG | Horn | #8–350 kcmil | #8–350 kcmil | Solid top | **UGHTRS223ACH** |
| 200 | 4 | UG | Horn | #8–350 kcmil | #8–350 kcmil | Solid top | **UHTTRS223ACH** |
| 200 | 4 | UG | Horn | #8–350 kcmil | #8–350 kcmil | Solid top | **UHTRS223ACH** |
| 200 | 4 | OH/UG | Horn | #6–350 kcmil | #6–350 kcmil | 3-5/16 hub opening | **UHTRS213CE** |
| 200 | 4 | OH/UG | Horn | #6–350 kcmil | #6–350 kcmil | 3-5/16 hub opening | **UHTRS213BE** |
| 200 | 4 | OH/UG | Horn | #8–350 kcmil | #8–350 kcmil | Solid top | **UHTRS213AE** |
| 200 | 4 | OH | Horn | #8–350 kcmil | #8–350 kcmil | 3-5/16 hub opening | **UHTRS203BCH** |
| 200 | 4 | OH | Horn | #8–250 kcmil | #8–250 kcmil | 3-5/16 hub opening | **UHTRS202BCH** |
| 200 | 4 | OH/UG | None | #8–250 kcmil | #8–250 kcmil | 2-inch bolt-on hub | **URS202NPECCH** ③ |

***Notes***

① Aluminum enclosure.
② Barrel lock.
③ PEC approved.

For dimensions, see **Pages V1-T4-8** and **V1-T4-9**.

## Residential Ringless Type Cover, continued

| Ampere Rating | Jaws | Service | Bypass | Connections Line | Load | Opening, Hub or Closure Plate | Catalog Number |
|---|---|---|---|---|---|---|---|
| 200 | 4 | OH/UG | Horn | #8–350 kcmil | #8–350 kcmil | Solid top | **UHIRS223ACVCH** |
| 200 | 4 | OH/UG | Horn | #8–350 kcmil | #8–350 kcmil | 3-5/16 hub opening | **UHIRS213BCVCH** |
| 200 | 5 | OH/UG | — | #6–350 kcmil | #6–350 kcmil | Closure plate | **UGTRS213CE** |
| 200 | 5 | OH/UG | — | #6–350 kcmil | #6–350 kcmil | Hub opening | **UGTRS213BE** |
| 200 | 5 | OH/UG | Horn | #6–350 kcmil | #6–350 kcmil | Closure plate | **786685217918** |
| 200 | 5 | OH/UG | Horn | #6–350 kcmil | #6–350 kcmil | 3-5/16 hub opening | **UGHTRS213BE** |
| 200 | 5 | OH/UG | Horn | #8–250 kcmil | #8–250 kcmil | 3-5/16 hub cover plate | **UGHRS212CKCCH** |
| 200 | 4 | OH | — | #8–250 kcmil | #8–250 kcmil | 3-5/16 hub opening | **UFTRS202BCH** |
| 200 | 4 | OH | Horn | #8–250 kcmil | #8–250 kcmil | 3-5/16 hub opening | **UFHTRS202BCH** |
| 200 | 4 | UG | Horn | #8–350 kcmil | #8–350 kcmil | Solid top | **UBHTRS223ARHCH** |
| 200 | 4 | UG | Horn | #8–350 kcmil | #8–350 kcmil | Solid top | **UBHRS223ACH** |
| 200 | 4 | OH | Horn | #8–250 kcmil | #8–250 kcmil | 3-5/16 hub cover plate | **UBHRS202BCH** |
| 200 | 4 | OH/UG | — | #8–350 kcmil | #8–350 kcmil | 3-5/16 hub opening | **UATRS213CFLCH** |
| 200 | 4 | OH/UG | Horn | #8–350 kcmil | #8–350 kcmil | 3-5/16 hub cover plate | **UAHTRS233CSHCH** |
| 200 | 4 | UG | Horn | #8–350 kcmil | #8–350 kcmil | Solid top | **UAHTRS223AFLCH** |
| 200 | 4 | OH | Horn | #8–250 kcmil | #8–250 kcmil | 3-5/16 hub opening | **UAHTRS202BFLCH** |
| 200 | 4 | OH/UG | — | #8–350 kcmil | #8–350 kcmil | 3-5/16 hub closure plate | **U92197CCCPLCH** |
| 200 | 4 | OH/UG | — | #8–350 kcmil | #8–350 kcmil | 3-5/16 hub closure plate | **1009928CH** |
| 200 | 4 | OH/UG | Horn | #8–250 kcmil | #8–250 kcmil | Solid top | **1009874ACH** |
| 200 | 4 | UG | — | 3/8-inch studs | 3/8-inch studs | Solid top | **1009046CH** |
| 200 | 4 | UG | Horn | #8–350 kcmil | #8–350 kcmil | Solid top | **1008941CH** |
| 200 | 4 | UG | Horn | #8–350 kcmil | #8–350 kcmil | Solid top | **1008940CH** |
| 200 | 4 | UG | Horn | #8–350 kcmil | #8–350 kcmil | Solid top | **1008827CH** |
| 200 | 4 | UG | Horn | #8–350 kcmil | #8–350 kcmil | Solid top | **1008819CH** |
| 200 | 4 | UG | Horn | #8–350 kcmil | #8–350 kcmil | Solid top | **1008717CH** |
| 200 | 4 | UG | — | #8–350 kcmil | #8–350 kcmil | Solid top | **1008617CH** |
| 200 | 4 | OH/UG | Horn | #8–350 kcmil | #8–350 kcmil | 3-5/16 hub opening | **1007817CH** |
| 200 | 4 | OH | Horn | #8–250 kcmil | #8–250 kcmil | 3-5/16 hub opening | **1007699CH** |
| 200 | 4 | OH | Horn | #8–250 kcmil | #8–250 kcmil | 3-5/16 hub opening | **1007665CH** |
| 200 | 4 | UG | Horn | #8–350 kcmil | #8–350 kcmil | Solid top | **1007588CH** |
| 200 | 4 | OH/UG | — | 3/8-inch studs | 3/8-inch studs | 3-5/16 hub opening | **1007448ACH** |
| 200 | 4 | UG | Horn | #8–350 kcmil | #8–350 kcmil | Solid top | **1004884ARHCH** ① |
| 200 | 4 | UG | Horn | #8–350 kcmil | #8–350 kcmil | Solid top | **1004884ACH** |
| 200 | 4 | OH/UG | — | #8–#250 kcmil | #8–#250 kcmil | 3-5/16 hub cover plate | **1004710ECH** |
| 200 | 4 | OH | — | N/A | N/A | N/A | **1004709DCH** |
| 200 | 4 | OH | Horn | #8–#250 kcmil | #8–#250 kcmil | 2-inch bolt-on hubs | **1004455BCH** |
| 200 | 4 | OH | Horn | #8–250 kcmil | #8–250 kcmil | 3-5/16 hub opening | **1004161ACH** |
| 200 | 4 | OH/UG | Horn | #8–350 kcmil | #8–350 kcmil | 3-5/16 hub opening | **1004159ACH** |
| 200 | 4 | OH/UG | — | #8–350 kcmil | #8–350 kcmil | Hub closure plate | **1008826ACH** ② |
| 200 | 4 | OH/UG | Lever | #6–350 kcmil | #6–350 kcmil | Hub closure plate | **1006352CCH** ② |
| 200 | 5 | OH | Horn | #8–250 kcmil | #8–250 kcmil | 3-5/16 hub opening | **1003879ACH** |
| 200 | 5 | OH/UG | Horn | #8–350 kcmil | #8–350 kcmil | 3-5/16 hub opening | **1003878ACH** |

***Notes***

① Right hand incoming.

② Austin Energy approved.

For dimensions, see **Pages V1-T4-8** and **V1-T4-9**.

URS101BCH

## Residential Ringless Type Cover, continued

| Ampere Rating | Jaws | Service | Bypass | Connections Line | Load | Opening, Hub or Closure Plate | Catalog Number |
|---|---|---|---|---|---|---|---|
| 150 | 4 | OH/UG | — | #8–2/0 AWG | #8–2/0 AWG | Hub closure plate | **1004326DCH** ① |
| 150 | 4 | OH/UG | — | #8–250 kcmil | #8–250 kcmil | Hub opening | **UTRS502BCH** |
| 150 | 4 | OH | — | #8–250 kcmil | #8–250 kcmil | 3-5/16 hub opening | **UTRS502BCH** |
| 150 | 4 | OH | — | #8–250 kcmil | #8–250 kcmil | 3-5/16 hub cover plate | **UTRS502CCH** |
| 125 | 4 | UG | — | N/A | N/A | N/A | **1006385BCH** |
| 125 | 4 | OH/UG | — | #8–2/0 cu/al | #8–2/0 cu/al | 3-5/16 hub opening | **UTRS111BCH** |
| 125 | 4 | OH | — | #8–2/0 cu/al | #8–2/0 cu/al | 3-5/16 hub opening | **UBTRS101BCH** |
| 125 | 4 | OH | — | #8–2/0 cu/al | #8–2/0 cu/al | 1-1/4-inch bolt-on hub | **UTRS101LCH** |
| 125 | 4 | OH | — | #8–2/0 cu/al | #8–2/0 cu/al | 3-5/16 hub cover plate | **UTRS101CE** |
| 125 | 4 | OH | — | #8–2/0 cu/al | #8–2/0 cu/al | 3-5/16 hub opening | **UTRS101BE** |
| 125 | 4 | OH | — | #8–2/0 | #8–2/0 | 3-5/16 hub cover plate | **URS101CCPLCH** |
| 125 | 4 | OH | Horn | cu/al with 1/2-inch hex head wire clamping screw | cu/al with 1/2-inch hex head wire clamping screw | 3-5/16 hub cover plate | **URS101BDQCH** |
| 125 | 4 | OH | — | #8–2/0 | #8–2/0 | 3-5/16 hub opening | **URS101BCPLCH** |
| 125 | 4 | OH | — | #8–2/0 | #8–2/0 | 3-5/16 hub opening | **URS101BCH** |
| 125 | 4 | OH | Horn | #8–2/0 | #8–2/0 | 3-5/16 hub opening | **UHTTRS101BCH** |
| 125 | 4 | OH/UG | Horn | #8–250 kcmil | #8–250 kcmil | 3-5/16 hub opening | **UHTRS111BCH** |
| 125 | 4 | OH | Horn | #8–2/0 | #8–2/0 | 1.25-inch hub mounted | **UHTRS101LCH** |
| 125 | 4 | OH | Horn | #8–2/0 | #8–2/0 | Closure plate | **UHTRS101CE** |
| 125 | 4 | OH | Horn | #8–2/0 | #8–2/0 | 3-5/16 hub opening | **UHTRS101BE** |
| 125 | 5 | OH/UG | — | #8–2/0 | #8–2/0 | 3-5/16 hub cover plate | **UGRS10101CKCCH** |
| 125 | 5 | OH/UG | — | #8–2/0 | #8–2/0 | 3-5/16 hub cover plate | **UGHTRS111CCH** |
| 125 | 5 | OH | — | #8–2/0 | #8–2/0 | 3-5/16 hub opening | **UGHTRS101BCH** |
| 125 | 4 | OH | — | #8–2/0 | #8–2/0 | 3-5/16 hub cover plate | **UBHRS101BCH** |
| 125 | 4 | OH/UG | — | #8–2/0 | #8–2/0 | 3-5/16 hub cover plate | **UATZRS101CFLCH** |
| 125 | 4 | OH | — | #8–2/0 | #8–2/0 | 3-5/16 hub cover plate | **UATRS101CCH** |
| 125 | 4 | OH | — | #8–2/0 | #8–2/0 | 3-5/16 hub opening | **1008947CH** |
| 125 | 4 | UG | N/A | N/A | N/A | N/A | **1005826ACH** |
| 125 | 4 | OH | — | #8–2/0 | #8–2/0 | 1-1/4-inch bolt-on hub | **1004931BCH** |
| 125 | 4 | OH | — | #8–2/0 | #8–2/0 | 3-5/16 hub opening | **1004162ACH** |
| 125 | 5 | OH | — | #8–2/0 | #8–2/0 | 3-5/16 hub opening | **1003880ACH** |
| 125 | 4 | OH | — | #8–2/0 | #8–2/0 | 3-5/16 hub opening | **UTZRS101BFLCH** |
| 125 | 4 | OH | — | #8–2/0 | #8–2/0 | 3-5/16 hub closure plate | **UTZRS101CFLCH** |
| 125 | 5 | OH | Horn | #8–2/0 | #8–2/0 | Hub opening | **UTRS101CEPSEG** ② |
| 100 | 4 | OH | — | #8–2/0 | #8–2/0 | 3-5/16 hub opening | **1009079CH** |
| 200 | 5 | OH/UG | Horn | #8–350 kcmil | #8–350 kcmil | Hub closure plate | **UTRS213CEPSEG** ② |

***Notes***

① Austin Energy approved.

② PSE&G approved.

For dimensions, see **Pages V1-T4-8** and **V1-T4-9**.

## Residential Ring Type Cover

| Ampere Rating | Jaws | Service | Connections Line | Load | Opening, Hub or Closure Plate | Catalog Number |
|---|---|---|---|---|---|---|
| 200 | 4 | UG | #8–350 kcmil | #8–350 kcmil | Solid top | **URTRS223ACH** |
| 200 | 4 | OH/UG | #8–350 kcmil | #8–350 kcmil | 3-5/16 hub cover plate | **URRS213CCH** |
| 200 | 4 | OH/UG | #8–350 kcmil | #8–350 kcmil | 2 inch hub mounted | **URTRS213NEUSCH** |
| 200 | 4 | OH/UG | #8–350 kcmil | #8–350 kcmil | 3-5/16 hub cover plate | **URTRS213CEUSCH** |
| 200 | 4 | OH/UG | #8–350 kcmil | #8–350 kcmil | 3-5/16 hub cover plate | **1009424CH** |
| 200 | 4 | OH/UG | #8–350 kcmil | #8–350 kcmil | Knockouts | **1009449CH** |
| 200 | 4 | OH | #8–350 kcmil | #8–350 kcmil | 3-5/16 hub opening | **URSTRS203BCH** |
| 200 | 4 | OH | #8–250 kcmil | #8–250 kcmil | 3-5/16 hub cover plate | **URS212BCRCH** |
| 200 | 4 | OH/UG | #8–250 kcmil | #8–250 kcmil | 3-5/16 hub cover plate | **URTRS202BCH** |
| 200 | 4 | OH | #8–250 kcmil | #8–250 kcmil | 3-5/16 hub opening | **URTRS213BE** |
| 200 | 4 | OH/UG | #6–350 kcmil | #6–350 kcmil | Hub opening | **URTRS202BCH** |
| 200 | 4 | OH/UG | #6–350 kcmil | #6–350 kcmil | Closure plate | **URTRS213CE** |
| 200 | 4 | UG | #6–350 kcmil | #6–350 kcmil | 3-5/16 hub opening | **URTRS213BEUSCH** |
| 200 | 4 | OH | #8–250 kcmil | #8–250 kcmil | 2-inch hub mounted | **URTRS202NEUSCH** |
| 200 | 4 | OH | #8–250 kcmil | #8–250 kcmil | 3-5/16 hub opening | **UNRRS202BEUSCH** |
| 200 | 4 | OH/UG | #6–350 kcmil | #6–350 kcmil | Closure plate | **UNRRS213CEUSE** |
| 200 | 4 | OH | #8–250 kcmil | #8–250 kcmil | Hub opening | **UNRRS213BEUSE** |
| 200 | 4 | UG | #6–350 kcmil | #6–350 kcmil | Solid top | **UNRRS213AEUSE** |
| 200 | 4 | OH/UG | #6–250 kcmil | #6–250 kcmil | 5x5 hub opening 3-5/16 adapter plate | **1009097CH** |
| 125 | 4 | OH | #8–2/0 cu/al | #8–2/0 cu/al | 3-5/16 hub opening | **URS101BCRCH** |
| 125 | 4 | OH | #8–2/0 cu/al | #8–2/0 cu/al | 1-1/4-inch bolt-on hub | **URRS101LCH** |
| 125 | 4 | OH | #8–2/0 cu/al | #8–2/0 cu/al | Hub cover plate | **URTRS101BE** |
| 125 | 4 | OH | #8–2/0 cu/al | #8–2/0 cu/al | Hub cover plate | **URTRS101CE** |
| 125 | 4 | OH | #8–2/0 cu/al | #8–2/0 cu/al | 3-5/16 hub cover plate | **UNRRS101BEUSE** |
| 125 | 4 | OH | #8–2/0 cu/al | #8–2/0 cu/al | Closure plate | **UNRRS101CEUSE** |
| 125 | 4 | OH/UG | #8–2/0 cu/al | #8–2/0 cu/al | 3-5/16 hub cover plate | **UNRRS111BEUSE** |
| 125 | 4 | UG | #8–2/0 cu/al | #8–2/0 cu/al | Solid top | **UNRRS111AEUSE** |
| 125 | 4 | OH | #8–2/0 cu/al | #8–2/0 cu/al | 3-5/16 hub opening | **URSTRS101BCH** |

***Note***

For dimensions, see **Pages V1-T4-8** and **V1-T4-9**.

## Dimensions

Approximate Dimensions in Inches (mm)

### Residential Ringless Type Cover

| Catalog Number | Height | Width | Depth |
|---|---|---|---|
| UTRS240ACH | 18.63 (473.2) | 13.00 (330.2) | 4.94 (125.5) |
| UTRS2303CCH | 20.00 (508.0) | 13.00 (330.2) | 4.94 (125.5) |
| UTRS223ACH | 13.00 (330.2) | 13.00 (330.2) | 4.94 (125.5) |
| UTRS220ACH | 15.13 (384.3) | 13.00 (330.2) | 4.94 (125.5) |
| UTRS213CFLCH | 15.00 (381.0) | 11.00 (279.4) | 4.37 (111.0) |
| UTRS213CEPCH | 15.00 (381.0) | 11.00 (279.4) | 4.37 (111.0) |
| UGTRS213CE | 15.13 (384.3) | 11.25 (285.8) | 4.50 (114.3) |
| UTRS213CE | 15.13 (384.3) | 11.25 (285.8) | 4.50 (114.3) |
| UATRS213BCH | 15.13 (384.3) | 11.25 (285.8) | 4.50 (114.3) |
| URS213BCH | 15.00 (381.0) | 11.00 (279.4) | 4.36 (110.7) |
| UTRS213BE | 15.13 (384.3) | 11.25 (285.8) | 4.50 (114.3) |
| UTRS213AFLCH | 15.00 (381.0) | 11.00 (279.4) | 4.37 (111.0) |
| UTRS213ACH | 15.00 (381.0) | 11.00 (279.4) | 4.36 (110.7) |
| UTRS2138BCH | 20.00 (508.0) | 13.00 (330.2) | 4.94 (125.5) |
| UTRS212ACH | 14.00 (355.6) | 11.00 (279.4) | 4.37 (111.0) |
| UTRS212CCH | 14.00 (355.6) | 11.00 (279.4) | 4.36 (110.7) |
| UTRS212CFLCH | 14.00 (355.6) | 11.00 (279.4) | 4.36 (110.7) |
| UTRS212BCH | 14.00 (355.6) | 11.00 (279.4) | 4.36 (110.7) |
| UTRS202NCH | 14.00 (355.6) | 8.00 (203.2) | 4.36 (110.7) |
| UATRS202BFLCH ① | 14.00 (355.6) | 8.00 (203.2) | 4.36 (110.7) |
| UTRS232CCH | 17.12 (434.8) | 13.00 (330.2) | 4.93 (125.2) |
| UTRS202BCH | 14.00 (355.6) | 8.00 (203.2) | 4.36 (110.7) |
| URS212ACH | 14.00 (355.6) | 11.00 (279.4) | 4.38 (111.3) |
| URS202NCH | 14.00 (355.6) | 8.00 (203.2) | 4.38 (111.3) |
| URS202BDQCH | 14.00 (355.6) | 8.00 (203.2) | 4.38 (111.3) |
| UFHTRS213CCH ② | 15.00 (381.0) | 11.00 (279.4) | 4.38 (111.3) |
| UHTTRS213BCH | 15.00 (381.0) | 11.00 (279.4) | 4.38 (111.3) |
| UHTTRS213CCH | 15.00 (381.0) | 11.00 (279.4) | 4.38 (111.3) |
| UHTTRS202BCH | 14.00 (355.6) | 8.00 (203.2) | 4.38 (111.3) |
| UHTRS233CCH | 17.13 (435.1) | 13.00 (330.2) | 4.94 (125.5) |
| UHTRS223ARHCH | 13.00 (330.2) | 13.00 (330.2) | 4.94 (125.5) |
| UFHTRS223ACH | 13.00 (330.2) | 13.00 (330.2) | 4.94 (125.5) |
| UGHTRS223ACH | 13.00 (330.2) | 13.00 (330.2) | 4.94 (125.5) |
| UHTTRS223ACH | 13.00 (330.2) | 13.00 (330.2) | 4.94 (125.5) |
| UHTRS223ACH | 13.00 (330.2) | 13.00 (330.2) | 4.94 (125.5) |
| UHTRS213CE | 15.00 (381.0) | 11.00 (279.4) | 4.38 (111.3) |
| UHTRS213BE | 15.00 (381.0) | 11.00 (279.4) | 4.38 (111.3) |
| UHTRS213AE | 15.00 (381.0) | 11.00 (279.4) | 4.38 (111.3) |
| UHTRS203BCH | 15.00 (381.0) | 8.00 (203.2) | 4.38 (111.3) |
| UHTRS202BCH | 14.00 (355.6) | 8.00 (203.2) | 4.38 (111.3) |
| UHIRS223ACVCH | 13.00 (330.2) | 13.00 (330.2) | 4.94 (125.5) |

### Residential Ringless Type Cover, continued

| Catalog Number | Height | Width | Depth |
|---|---|---|---|
| UHIRS213BCVCH | 15.00 (381.0) | 11.00 (279.4) | 4.38 (111.3) |
| UGTRS213CE | 15.13 (384.3) | 11.25 (285.8) | 4.50 (114.3) |
| UGTRS213BE | 15.13 (384.3) | 11.25 (285.8) | 4.50 (114.3) |
| 786685217918 | 15.13 (384.3) | 11.25 (285.8) | 4.50 (114.3) |
| UGHTRS213BE | 15.13 (384.3) | 11.25 (285.8) | 4.50 (114.3) |
| UGHRS212CKCCH | 14.00 (355.6) | 11.00 (279.4) | 4.38 (111.3) |
| UFTRS202BCH | 14.00 (355.6) | 8.00 (203.2) | 4.38 (111.3) |
| UFHTRS202BCH | 14.00 (355.6) | 8.00 (203.2) | 4.38 (111.3) |
| UBHTRS223ARHCH | 13.00 (330.2) | 13.00 (330.2) | 4.94 (125.5) |
| UBHRS223ACH | 13.00 (330.2) | 13.00 (330.2) | 4.94 (125.5) |
| UBHRS202BCH | 14.00 (355.6) | 8.00 (203.2) | 4.38 (111.3) |
| UATRS213CFLCH | 15.00 (381.0) | 11.00 (279.4) | 4.38 (111.3) |
| UAHTRS233CSHCH | 17.13 (435.1) | 13.00 (330.2) | 4.94 (125.5) |
| UAHTRS223AFLCH | 13.00 (330.2) | 13.00 (330.2) | 4.94 (125.5) |
| UAHTRS202BFLCH | 14.00 (355.6) | 8.00 (203.2) | 4.38 (111.3) |
| U92197CCCPLCH | 14.13 (358.9) | 13.00 (330.2) | 4.94 (125.5) |
| 1009928CH | 15.00 (381.0) | 11.00 (279.4) | 4.38 (111.3) |
| 1009874ACH | 15.00 (381.0) | 13.00 (330.2) | 4.94 (125.5) |
| 1009046CH | 20.75 (527.1) | 9.00 (228.6) | 4.94 (125.5) |
| 1008941CH | 17.13 (435.1) | 13.00 (330.2) | 4.94 (125.5) |
| 1008940CH | 17.13 (435.1) | 13.00 (330.2) | 4.94 (125.5) |
| 1008827CH | 13.00 (330.2) | 13.00 (330.2) | 4.94 (125.5) |
| 1008819CH | 13.00 (330.2) | 13.00 (330.2) | 4.94 (125.5) |
| 1008717CH | 15.00 (381.0) | 13.00 (330.2) | 4.94 (125.5) |
| 1008617CH | 15.00 (381.0) | 13.00 (330.2) | 4.94 (125.5) |
| 1007817CH | 15.00 (381.0) | 11.00 (279.4) | 4.38 (111.3) |
| 1007699CH | 14.00 (355.6) | 8.00 (203.2) | 4.38 (111.3) |
| 1007665CH | 14.00 (355.6) | 8.00 (203.2) | 4.38 (111.3) |
| 1007588CH | 13.00 (330.2) | 13.00 (330.2) | 4.94 (125.5) |
| 1007448ACH | 19.00 (482.6) | 11.00 (279.4) | 4.38 (111.3) |
| 1004884ARHCH ③ | 13.00 (330.2) | 13.00 (330.2) | 4.93 (125.2) |
| 1004884ACH | 13.00 (330.2) | 13.00 (330.2) | 4.93 (125.2) |
| 1004710ECH | 14.00 (355.6) | 11.00 (279.4) | 4.38 (111.3) |
| 1004709DCH | N/A | N/A | N/A |
| 1004455BCH | 15.00 (381.0) | 8.00 (203.2) | 4.38 (111.3) |
| 1004161ACH | 14.00 (355.6) | 8.00 (203.2) | 4.38 (111.3) |
| 1004159ACH | 15.00 (381.0) | 11.00 (279.4) | 4.38 (111.3) |
| 1003879ACH | 15.00 (381.0) | 8.00 (203.2) | 4.38 (111.3) |
| 1003878ACH | 15.00 (381.0) | 11.00 (279.4) | 4.38 (111.3) |
| UTRS502BCH | 14.00 (355.6) | 8.00 (203.2) | 4.38 (111.3) |

***Notes***

① Aluminum enclosure.
② Barrel lock.
③ Right hand incoming.

Approximate Dimensions in Inches (mm)

## Residential Ringless Type Cover, continued

| Catalog Number | Height | Width | Depth |
|---|---|---|---|
| **UTRS502BCH** | 14.00 (355.6) | 8.00 (203.2) | 4.36 (110.7) |
| **UTRS502CCH** | 14.00 (355.6) | 8.00 (203.2) | 4.36 (110.7) |
| **1006385BCH** | N/A | N/A | N/A |
| **UTRS111BCH** | 14.00 (355.6) | 11.00 (279.4) | 4.36 (110.7) |
| **UBTRS101BCH** | 10.88 (276.4) | 8.00 (203.2) | 3.50 (88.9) |
| **UTRS101LCH** | 10.88 (276.4) | 8.00 (203.2) | 3.50 (88.9) |
| **UTRS101CE** | 11.05 (280.7) | 8.22 (208.8) | 3.61 (91.7) |
| **UTRS101BE** | 11.05 (280.7) | 8.22 (208.8) | 3.61 (91.7) |
| **URS101CCPLCH** | 10.88 (276.4) | 8.00 (203.2) | 3.50 (88.9) |
| **URS101BDQCH** | 10.88 (276.4) | 8.00 (203.2) | 3.50 (88.9) |
| **URS101BCPLCH** | 10.88 (276.4) | 8.00 (203.2) | 3.50 (88.9) |
| **URS101BCH** | 10.88 (276.4) | 8.00 (203.2) | 3.50 (88.9) |
| **UHTTRS101BCH** | 10.88 (276.4) | 8.00 (203.2) | 3.50 (88.9) |
| **UHTRS111BCH** | 14.00 (355.6) | 11.00 (279.4) | 4.38 (111.3) |
| **UHTRS101LCH** | 10.88 (276.4) | 8.00 (203.2) | 3.50 (88.9) |
| **UHTRS101CE** | 11.05 (280.7) | 8.22 (208.8) | 3.61 (91.7) |
| **UHTRS101BE** | 11.05 (280.7) | 8.22 (208.8) | 3.61 (91.7) |
| **UGRS10101CKCCH** | 12.00 (304.8) | 8.00 (203.2) | 3.50 (88.9) |
| **UGHTRS111CCH** | 14.00 (355.6) | 11.00 (279.4) | 4.36 (110.7) |
| **UGHTRS101BCH** | 10.88 (276.4) | 8.00 (203.2) | 3.50 (88.9) |
| **UBHRS101BCH** | 10.88 (276.4) | 8.00 (203.2) | 3.50 (88.9) |
| **UATZRS101CFLCH** | 10.88 (276.4) | 8.00 (203.2) | 3.50 (88.9) |
| **UATRS101CCH** | 10.87 (276.1) | 8.00 (203.2) | 3.50 (88.9) |
| **1008947CH** | 10.89 (276.6) | 8.00 (203.2) | 3.50 (88.9) |
| **1005826ACH** | N/A | N/A | N/A |
| **1004931BCH** | 10.88 (276.4) | 8.00 (203.2) | 3.50 (88.9) |
| **1004162ACH** | 10.89 (276.6) | 8.00 (203.2) | 3.50 (88.9) |
| **1003880ACH** | 10.89 (276.6) | 8.00 (203.2) | 3.50 (88.9) |
| **UTZRS101BFLCH** | N/A | N/A | N/A |
| **UTZRS101CFLCH** | N/A | N/A | N/A |
| **1009079CH** | 23.75 (603.3) | 8.00 (203.2) | 3.48 (88.4) |

## Residential Ring Type Cover

| Catalog Number | Height | Width | Depth |
|---|---|---|---|
| **URTRS223ACH** | 13.00 (330.2) | 13.00 (330.2) | 4.93 (125.2) |
| **URRS213CCH** | 15.00 (381.0) | 11.00 (279.4) | 4.38 (111.3) |
| **URTRS213NEUSCH** | 15.00 (381.0) | 11.00 (279.4) | 4.38 (111.3) |
| **URTRS213CEUSCH** | 15.00 (381.0) | 11.00 (279.4) | 4.38 (111.3) |
| **1009424CH** | 15.00 (381.0) | 11.00 (279.4) | 4.38 (111.3) |
| **1009449CH** | 18.31 (465.1) | 14.19 (360.4) | 5.13 (130.3) |
| **URSTRS203BCH** | N/A | N/A | N/A |
| **URS212BCRCH** | 14.00 (355.6) | 8.00 (203.2) | 4.38 (111.3) |
| **URTRS202BCH** | 14.00 (355.6) | 11.00 (279.4) | 4.38 (111.3) |
| **URTRS213BE** | 14.00 (355.6) | 8.00 (203.2) | 4.50 (114.3) |
| **URTRS202BCH** | 15.13 (384.3) | 11.25 (285.8) | 4.50 (114.3) |
| **URTRS213CE** | 15.13 (384.3) | 11.25 (285.8) | 4.50 (114.3) |
| **URTRS213BEUSCH** | 15.13 (384.3) | 11.25 (285.8) | 4.50 (114.3) |
| **URTRS202NEUSCH** | 14.00 (355.6) | 8.00 (203.2) | 4.38 (111.3) |
| **UNRRS202BEUSCH** | 14.00 (355.6) | 8.00 (203.2) | 4.38 (111.3) |
| **UNRRS213CEUSE** | 15.13 (384.3) | 11.25 (285.8) | 4.50 (114.3) |
| **UNRRS213BEUSE** | 15.13 (384.3) | 11.25 (285.8) | 4.50 (114.3) |
| **UNRRS213AEUSE** | 15.13 (384.3) | 11.25 (285.8) | 4.50 (114.3) |
| **1009097CH** | 19.00 (482.6) | 13.00 (330.2) | 5.25 (133.4) |
| **URS101BCRCH** | 10.88 (276.4) | 8.00 (203.2) | 3.50 (88.9) |
| **URRS101LCH** | 10.88 (276.4) | 8.00 (203.2) | 3.50 (88.9) |
| **URTRS101BE** | 11.00 (279.4) | 8.25 (209.6) | 3.63 (92.2) |
| **URTRS101CE** | 11.00 (279.4) | 8.25 (209.6) | 3.63 (92.2) |
| **UNRRS101BEUSE** | 10.88 (276.4) | 8.00 (203.2) | 3.50 (88.9) |
| **UNRRS101CEUSE** | 10.88 (276.4) | 8.00 (203.2) | 3.50 (88.9) |
| **UNRRS111BEUSE** | 14.00 (355.6) | 11.00 (279.4) | 4.38 (111.3) |
| **URSTRS101BCH** | 10.88 (276.4) | 8.00 (203.2) | 3.50 (88.9) |

**Commercial Lever Bypass Sockets**

## Contents


| *Description* | *Page* |
|---|---|
| Catalog Number Selection | **V1-T4-11** |
| Product Selection | **V1-T4-12** |
| Dimensions | **V1-T4-16** |


## Product Description

- Heavy-duty, lever bypass, jaw clamping ringless meter socket design
- 200 A and 320 A styles available
- Single-phase or three-phase
- 4, 5 or 7 terminal available
- 600 Vac maximum rating
- Multiple service design offerings

## Standards and Certifications

- UL 414 listed and recognized

Listed

## Catalog Number Selection

### Single Meter Sockets H Group

**UT H 4 2 0 3 B CH**

**Note:** The "U" prefix is always used first followed by other prefixes required in alphabetical order.

| Standard Prefixes | |
|---|---|
| **A** | = Aluminum enclosure |
| **B** | = Barrel lock provision, for an exposed INNER-TITE or Brooks barrel lock; unit includes an internal lock receiver bracket |
| **F** | = Barrel Lock with guard provision, for a lock guard INNER-TITE or Brooks barrel lock; unit includes an internal lock receiver bracket |
| **G** | = Grounded fifth terminal (9 o'clock position) |
| **H** | = Horn bypass |
| **I** | = Inhibitor installed in wire connectors |
| **M** | = Temporary meter cover (waxed cardboard) |
| **N** | = No sealing ring (applies only to ring style sockets) |
| **R** | = Ring style socket |
| **S** | = Aluminum screw type sealing ring (applies only to ring style sockets) |
| **T** | = Grounding connector (#14–#2 Cu) for triplex ground |
| **TT** | = Two grounding connectors (#14–#2 Cu) for quadplex ground |
| **U** | = UL label |
| **Z** | = 5/16-inch hex head connector screw in place of slotted (100 A only) |

| Product Group | |
|---|---|
| **RS** | = Residential service, single position |
| **2R-6R** | = Residential service, multiple position |
| **2H-6H** | = Commercial or residential service, multiple position |
| **H** | = Commercial or residential service, single position |

| Jaw Quantity |
|---|
| **4** = 4 terminals |
| **5** = 5 terminals |
| **7** = 7 terminals |

| Ampere Rating |
|---|
| **2** = 200 A |
| **3** = 320 A |

| Service Design |
|---|
| **0** = Overhead |
| **1** = Combination overhead/underground |
| **2** = Underground, side wired |
| **3** = Combination overhead/underground, side wired |

| Maximum Conductor (Line & Load) |
|---|
| **0** = 0.38-inch stud connectors |
| **3** = #350 kcmil connectors |
| **5** = #500 kcmil connectors |
| **6** = #600 kcmil connectors |
| **7** = #750 kcmil connectors |
| **8** = Dual #250 kcmil connectors |
| **9** = Dual #350 kcmil connectors |

| Standard Suffixes | |
|---|---|
| **A** | = Solid top |
| **B** | = Small hub opening |
| **C** | = Small hub closing plate mounted |
| **L** | = 1.25-inch (31.8 mm) hub mounted |
| **M** | = 1.50-inch (38.1 mm) hub mounted |
| **N** | = 2.00-inch (50.8 mm) hub mounted |
| **P** | = 2.50-inch (63.5 mm) hub mounted |
| **T** | = Large hub opening hub |
| **U** | = Large hub cover plate hub mounted |
| **V** | = 2.50-inch (63.5 mm) large hub mounted |
| **Q** | = 3.00-inch (76.2 mm) large hub mounted |
| **R** | = 3.50-inch (88.9 mm) large hub mounted |
| **S** | = 4.00-inch (101.6 mm) large hub mounted |
| **Z** | = Large to small hub adapter mounted |

## Product Selection

### Commercial Lever Bypass

| Ampere Rating | Jaws | Service | Bypass | Connections Line | Load | Opening, Hub or Closure Plate | Catalog Number |
|---|---|---|---|---|---|---|---|
| 320 | 7 | OH/UG | Lever | #4-600 kcmil | #4–600 kcmil | 5x5 hub opening | **UTTH7336TCH** |
| 320 | 7 | OH | Lever | #600 kcmil | Dual #6–350 | 5x5 hub opening | **UTH73069THLCH** |
| 320 | 7 | OH/UG | Lever | #14–1/0 cu/al | #6–350 kcmil | 5x5 hub cover plate | **UTH73369UHLCH** |
| 320 | 7 | OH/UG | Lever | #14–1/0 cu/al | #6–350 kcmil | 5x5 hub opening | **UTH73369THLCH** |
| 320 | 7 | OH/UG | Lever | 3/8-inch studs | 3/8-inch studs | 5x5 hub cover plate | **UFTH7330UCH** |
| 320 | 7 | OH/UG | Lever | #600 kcmil | #600 kcmil | 5x5 hub opening | **UTH7336TCH** |
| 320 | 7 | OH/UG | Lever | 3/8-inch studs | 3/8-inch studs | 5x5 hub cover plate | **UTH7330UCH** |
| 320 | 7 | OH/UG | Lever | 3/8-inch studs | 3/8-inch studs | 5x5 hub cover plate | **UTH7330UFLCH** |
| 320 | 7 | OH/UG | Lever | 3/8-inch studs | 3/8-inch studs | 5x5 hub cover plate | **UATH7330UFLCH** ① |
| 320 | 7 | OH/UG | Lever | 3/8-inch studs | 3/8-inch studs | 5x5 hub opening | **UH7330TCPLCH** |
| 320 | 7 | OH/UG | Lever | 3/8-inch studs | 3/8-inch studs | 5x5 hub opening | **UTH7330TCH** |
| 320 | 7 | OH/UG | Lever | 3/8-inch studs | 3/8-inch studs | 5x5 hub-inch opening | **UTTH7330TCH** |
| 320 | 7 | OH/UG | Lever | 3/8-inch studs | 3/8-inch studs | 5x5 hub cover plate | **UH7300UCPLCH** |
| 320 | 7 | OH/UG | Lever | 3/8-inch studs | 3/8-inch studs | 5x5 hub cover plate | **UTH7300UCH** |
| 320 | 7 | OH/UG | Lever | 3/8-inch studs | 3/8-inch studs | 5x5 hub opening | **UTH7300TCH** |
| 320 | 7 | OH/UG | Lever | #6–350 kcmil | #6–350 kcmil | Hub closure plate | **1006353CCH** ② |
| 320 | 5 | OH/UG | Lever | 3/8-inch studs | 3/8-inch studs | 5x5 hub cover plate | **UTH5330UFLCH** |
| 320 | 5 | OH/UG | Lever | 3/8-inch studs | 3/8-inch studs | 5x5 hub cover plate | **UTH5330UCH** |
| 320 | 5 | OH | Lever | 3/8-inch studs | 3/8-inch studs | 5x5 hub opening | **UTH5300TCH** |
| 320 | 5 | OH/UG | Lever | 3/8-inch studs | 3/8-inch studs | 5x5 hub cover plate | **UATH5330UFLCH** |
| 320 | 4 | OH/UG | lever | #4–600 kcmil | #4–600 kcmil | Hub closure plate | **1010468CH** ② |
| 320 | 4 | UG | Lever | 3/8-inch studs | 3/8-inch studs | Solid top | **UTH4320ACH** |
| 320 | 4 | UG | Lever | 3/8-inch studs | Dual #6–350 | Solid top | **UTH43209ACH** |
| 320 | 4 | OH/UG | Lever | #6–350 kcmil | #6–350 kcmil | 5x5 hub cover plate | **UTH4339UCH** |
| 320 | 4 | OH/UG | Lever | #6–250 kcmil | #6–250 kcmil | 5x5 hub cover plate | **UTH4338UCH** |
| 320 | 4 | OH/UG | Lever | #4–600 kcmil | #4–600 kcmil | 5x5 hub cover plate | **UTH4336UCH** |
| 320 | 4 | OH/UG | Lever | #4–600 kcmil | #4–600 kcmil | 5x5 hub opening | **UTH4336TCH** |
| 320 | 4 | OH/UG | Lever | #4–600 kcmil | #6–350 kcmil | 5x5 hub cover plate | **UTH43369UCH** |
| 320 | 4 | OH/UG | Lever | #4–600 kcmil | #6–350 kcmil | 5x5 hub opening | **UTH43369TCH** |
| 320 | 4 | OH/UG | Lever | 3/8-inch studs | 3/8-inch studs | 3-5/16 hub cover plate | **UTTH4330UCH** |
| 320 | 4 | OH/UG | Lever | 3/8-inch studs | 3/8-inch studs | 3-5/16 hub cover plate | **UTH4330UCH** |
| 320 | 4 | OH/UG | Lever | 3/8-inch studs | 3/8-inch studs | 5x5 hub opening | **UBTH4330TCH** |
| 320 | 4 | OH/UG | Lever | 3/8-inch studs | 3/8-inch studs | 5x5 hub opening | **UTH4330TCH** |
| 320 | 4 | OH/UG | Lever | 3/8-inch studs | 3/8-inch studs | 5x5 cover plate | **UTH4300UCH** |
| 320 | 4 | OH/UG | Lever | 3/8-inch studs | 3/8-inch studs | 5x5 hub opening | **UTH4300TCH** |
| 320 | 5 | OH/UG | Lever | 3/8-inch studs | 3/8-inch studs | 5x5 hub cover plate | **UH5300UKCCH** |
| 320 | 4 | OH/UG | Lever | #6–250 kcmil | #4–600 kcmil | 5x5 hub cover plate | **UH43168UCPLCH** |
| 320 | 4 | OH/UG | Lever | #4–600 kcmil | #6–250 kcmil | 5x5 hub cover plate | **UH43068TCPLCH** |
| 320 | 5 | OH/UG | Lever | 3/8-inch studs | 3/8-inch studs | 5x5 hub cover plate | **UGTH4330UCH** |
| 320 | 5 | OH/UG | Lever | 3/8-inch studs | 3/8-inch studs | 5x5 hub opening | **UGTH4330TCH** |
| 320 | 7 | OH/UG | Lever | 3/8-inch studs | 3/8-inch studs | 5x5 hub opening | **UFTH7330TCH** |
| 320 | 4 | OH/UG | Lever | 3/8-inch studs | 3/8-inch studs | 5x5 hub opening | **UFTH4330TCH** |

***Notes***

① Aluminum enclosure.

② Austin Energy approved.

For dimensions, see **Pages V1-T4-16** and **V1-T4-17**.

## Commercial Lever Bypass, continued

| Ampere Rating | Jaws | Service | Bypass | Connections Line | Load | Opening, Hub or Closure Plate | Catalog Number |
|---|---|---|---|---|---|---|---|
| 320 | 7 | OH/UG | Lever | #4–600 kcmil | #4–600 kcmil | 5x5 hub opening | **UATH7336TCH** |
| 320 | 5 | OH/UG | Lever | 3/8-inch studs | 3/8-inch studs | 5x5 hub cover plate | **UATH5330UFLCH** |
| 320 | 4 | OH/UG | Lever | #4–600 kcmil | #4–600 kcmil | 5x5 hub opening | **UATH4336TCH** |
| 320 | 4 | OH/UG | Lever | 3/8-inch studs | 3/8-inch studs | 5x5 hub opening | **UATH4330TCH** |
| 320 | 4 | OH/UG | Lever | 3/8-inch studs | 3/8-inch studs | 5x5 hub cover plate | **1009788CH** |
| 320 | 4 | OH/UG | Lever | 3/8-inch studs | 3/8-inch studs | 5x5 hub cover plate | **1009788ACH** ① |
| 320 | 4 | OH/UG | Lever | Dual #6–350 | Dual #6–350 | (2) 5x5 hub cover plates | **1009760ACH** |
| 320 | 4 | OH/UG | Lever | Dual #6–350 | Dual #6–350 | 5x5 hub cover plate | **1009722CH** |
| 320 | 4 | OH/UG | Lever | 3/8-inch studs | 3/8-inch studs | 5x5 hub cover plate | **782116975945** |
| 320 | 4 | OH/UG | Lever | 3/8-inch studs | 3/8-inch studs | 5x5 hub cover plate | **1009260CH** |
| 320 | 7 | OH/UG | Lever | #4–600 kcmil/Dual 1/0–250 kcmil cu/al | #4–600 kcmil/Dual 1/0–250 kcmil cu/al | 5x5 hub opening | **1009181CH** |
| 320 | 4 | UG | Lever | #6–350 kcmil | #6–350 kcmil | Solid top | **1009018CH** |
| 320 | 4 | OH/UG | Lever | 3/8-inch studs | 3/8-inch studs | 5x5 hub opening | **1008950CH** |
| 320 | 4 | OH/UG | Lever | 3/8-inch studs | 3/8-inch studs | 5x5 hub opening | **1008948CH** |
| 320 | 4 | UG | Lever | 3/8-inch studs | 3/8-inch studs | Solid top | **1008848CH** |
| 320 | 4 | OH/UG | Lever | 3/8-inch studs | 3/8-inch studs | 5x5 hub opening | **1008837CH** |
| 320 | 4 | OH/UG | Lever | 3/8-inch studs | 3/8-inch studs | 5x5 hub opening | **1008836CH** |
| 320 | 7 | OH/UG | Lever | 3/8-inch studs | 3/8-inch studs | 5x5 hub opening | **1008798CH** |
| 320 | 4 | OH/UG | Lever | 3/8-inch studs | 3/8-inch studs | 5x5 hub opening | **1008793CH** |
| 320 | 5 | OH/UG | Lever | 3/8-inch studs | 3/8-inch studs | 5x5 hub opening | **1008792CH** |
| 320 | 7 | OH/UG | Lever | #4–600 kcmil/Dual 1/0–250 kcmil cu/al | #4–600 kcmil/Dual 1/0–250 kcmil cu/al | 5x5 hub opening | **1008543CH** |
| 320 | 4 | OH/UG | Lever | #4–600 kcmil cu/al | #4–600 kcmil cu/al | 5x5 hub opening | **1008541CH** |
| 320 | 4 | UG | Lever | N/A | N/A | Solid top | **1008540CH** |
| 320 | 4 | OH/UG | Lever | #4–600 kcmil cu/al | #4–600 kcmil cu/al | Solid top | **1008435CH** |
| 320 | 4 | OH/UG | Lever | 3/8-inch studs | 3/8-inch studs | 5x5 hub opening | **1008191CH** |
| 320 | 4 | OH/UG | Lever | #6–350 kcmil | #6–350 kcmil | 5x5 hub opening | **1008068CH** |
| 320 | 4 | OH/UG | Lever | N/A | N/A | N/A | **1007818CH** |
| 320 | 4 | OH/UG | Lever | 3/8-inch studs | 3/8-inch studs | 5x5 hub opening | **1007801CH** |
| 320 | 4 | OH/UG | Lever | 3/8-inch studs | 3/8-inch studs | 5x5 hub opening | **1007672CH** |
| 320 | 4 | OH/UG | Lever | #6–350 kcmil | #6–350 kcmil | 5x5 hub opening | **1006344ACH** |
| 320 | 4 | OH/UG | Lever | TBD | TBD | 5x5 hub opening | **1004984ACH** |
| 320 | 4 | OH/UG | N/A | #4–600 kcmil | #4–600 kcmil | 3-inch bolt-on hub | **1004771BCH** |
| 200 | 7 | OH/UG | Lever | 3/8-inch studs | 3/8-inch studs | N/A | **UBTH7230ACH** |
| 200 | 7 | OH/UG | Lever | #6–350 kcmil | #6–350 kcmil | 5x5 hub cover plate | **UTH7233UCH** |

***Notes***

① Bolted in shield.

For dimensions, see **Pages V1-T4-16** and **V1-T4-17**.

## Commercial Lever Bypass, continued

| Ampere Rating | Jaws | Service | Bypass | Connections Line | Load | Opening, Hub or Closure Plate | Catalog Number |
|---|---|---|---|---|---|---|---|
| 200 | 7 | OH/UG | Lever | #6–350 kcmil | #6–350 kcmil | 5x5 hub cover plate | **UTE7213UFLCH** |
| 200 | 7 | OH/UG | Lever | #6–350 kcmil | #6–350 kcmil | 3-5/16 hub cover plate | **UETH72137UCH** |
| 200 | 7 | OH/UG | Lever | #6–350 kcmil | #6–350 kcmil | 3-5/16 hub cover plate | **UTE7213UCH** |
| 200 | 7 | OH/UG | Lever | #6–350 kcmil | #6–350 kcmil | 5x5 hub opening | **UTE7213THLCH** |
| 200 | 7 | OH/UG | Lever | #6–350 kcmil | #6–350 kcmil | 5x5 hub opening | **UBHRS212BCH** |
| 200 | 7 | OH/UG | Lever | #6–350 kcmil | #6–350 kcmil | 5x5 hub opening | **UBEH7213TCH** |
| 200 | 7 | OH/UG | Lever | #6–350 kcmil | #6–350 kcmil | 5x5 hub opening | **UFTE7213TCH** ① |
| 200 | 7 | OH/UG | Lever | #6–350 kcmil | #6–350 kcmil | Large to small hub adapter | **UTE7213ZCH** |
| 200 | 7 | OH/UG | Lever | #6–350 kcmil | #6–350 kcmil | 5x5 hub opening | **UTE7213TCH** |
| 200 | 7 | OH/UG | Lever | #6–350 kcmil | #6–350 kcmil | 3-5/16 hub cover plate | **UTE7213CFLCH** |
| 200 | 7 | OH/UG | Lever | #6–350 kcmil | #6–350 kcmil | 3-5/16 hub cover plate | **UTE7213CCH** |
| 200 | 7 | OH/UG | Lever | #6–350 kcmil | #6–350 kcmil | 3-5/16 hub opening | **UBTE7213BCH** |
| 200 | 7 | OH/UG | Lever | #6–350 kcmil | #6–350 kcmil | 3-5/16 hub opening | **UTE7213BCH** |
| 200 | 7 | OH/UG | Lever | 3/8-inch studs | 3/8-inch studs | 5x5 hub cover plate | **UTE7210UCH** |
| 200 | 7 | OH | Lever | #6–350 kcmil | #6–350 kcmil | 5x5 hub opening | **UTE7203TCH** |
| 200 | 7 | OH | Lever | #6–350 kcmil | #6–350 kcmil | 3-5/16 hub opening | **UTE7203BCH** |
| 200 | 5 | OH/UG | Lever | #6–350 kcmil | #6–350 kcmil | 5x5 hub cover plate | **UETH5213UCH** |
| 200 | 5 | OH/UG | Lever | #6–350 kcmil | #6–350 kcmil | 5x5 hub opening | **UTE5213TCH** |
| 200 | 5 | OH/UG | Lever | #6–350 kcmil | #6–350 kcmil | 5x5 hub opening | **UTTE5213TCH** |
| 200 | 5 | OH/UG | Lever | #6–350 kcmil | #6–350 kcmil | 3-5/16 hub cover plate | **UTE5213CCH** |
| 200 | 5 | OH/UG | Lever | #6–350 kcmil | #6–350 kcmil | 3-5/16 hub opening | **UTE5213BNDCH** |
| 200 | 5 | OH/UG | Lever | #6–350 kcmil | #6–350 kcmil | Large to small hub adapter | **UTE5213ZCH** |
| 200 | 5 | OH/UG | Lever | #6–350 kcmil | #6–350 kcmil | 5x5 hub cover plate | **UTE5213UFLCH** |
| 200 | 5 | OH/UG | Lever | #6–350 kcmil | #6–350 kcmil | 3-5/16 hub cover plate | **UTE5213CFLCH** |
| 200 | 5 | OH/UG | Lever | #6–350 kcmil | #6–350 kcmil | 3-5/16 hub opening | **UTE5213BCH** |
| 200 | 5 | OH/UG | Lever | 3/8-inch studs | 3/8-inch studs | 3-5/16 hub cover plate | **UTE5210CCH** |
| 200 | 5 | OH | Lever | #6–350 kcmil | #6–350 kcmil | 3-5/16 hub opening | **UTE5203BCH** |
| 200 | 4 | OH/UG | Lever | #6–350 kcmil | #6–350 kcmil | 5x5 hub opening with adapter plate | **UTE4213ZCH** |
| 200 | 5 | OH/UG | Lever | #6–350 kcmil | #6–350 kcmil | 5x5 hub cover plate | **UGTE4213CCH** |
| 200 | 4 | OH/UG | Lever | #6–350 kcmil | #6–350 kcmil | 5x5 hub opening | **UTE4213TCH** |
| 200 | 4 | OH/UG | Lever | #6–350 kcmil | #6–350 kcmil | 5x5 hub cover plate | **UTTE4213UCH** ② |
| 200 | 4 | OH/UG | Lever | #6–350 kcmil | #6–350 kcmil | 5x5 hub cover plate | **UTE4213CCH** |
| 200 | 4 | OH/UG | Lever | #6–350 kcmil | #6–350 kcmil | 3-5/16 hub opening | **UTE4213BCH** |
| 200 | 4 | OH | Lever | #6–350 kcmil | #6–350 kcmil | 3-5/16 hub opening | **UTE4203BCH** |
| 200 | 7 | OH/UG | Lever | #6–350 kcmil | #6–350 kcmil | 5x5 hub cover plate | **UIH7213UCVCH** |
| 200 | 7 | OH/UG | Lever | #6–350 kcmil | #6–350 kcmil | 3-5/16 hub cover plate | **UE7213CCCCH** |
| 200 | 7 | OH/UG | Lever | #6–350 kcmil | #6–350 kcmil | 3-5/16 hub cover plate | **UE7213CCPLCH** |
| 200 | 7 | OH/UG | Lever | #6–350 kcmil | #6–350 kcmil | 3-5/16 hub opening | **UE7213BCPLCH** |

***Notes***

① Barrel lock.

② TT = quadplex ground.

For dimensions, see **Pages V1-T4-16** and **V1-T4-17**.

## Commercial Lever Bypass, continued

| Ampere Rating | Jaws | Service | Bypass | Connections Line | Load | Opening, Hub or Closure Plate | Catalog Number |
|---|---|---|---|---|---|---|---|
| 200 | 5 | OH/UG | Lever | #6–350 kcmil | #6–350 kcmil | 3-5/16 hub opening | **UGTE4213BCH** |
| 200 | 4 | OH/UG | Lever | #6–350 kcmil | #6–350 kcmil | 3-5/16 hub cover plate | **UGE4213CCCCH** |
| 200 | 7 | OH/UG | Lever | #6–350 kcmil | #6–350 kcmil | 3-5/16 hub opening | **UFTE7213BCH** |
| 200 | 7 | OH/UG | Lever | #6–350 kcmil | #6–350 kcmil | 5x5 hub opening | **UATE7213TCH** |
| 200 | 5 | OH/UG | Lever | #6–350 kcmil | #6–350 kcmil | 3-5/16 hub cover plate | **UATE5213CCH** |
| 200 | 4 | OH/UG | Lever | #6–350 kcmil | #6–350 kcmil | 5x5 hub cover plate | **UATE4213UFLCH** |
| 200 | 5 | OH | Lever | #6–350 kcmil | #6–350 kcmil | 3-5/16 hub opening | **UBGTE4203BCH** |
| 200 | 7 | UG | Lever | 4/0 compression line | #6–350 kcmil cu/al load | Solid top | **1009845ECH** |
| 200 | 5 | OH/UG | Lever | #6–350 kcmil | #6–350 kcmil | 3-5/16 hub cover plate | **1008801ECH** |
| 200 | 5 | OH/UG | Lever | 3/8-inch studs | 3/8-inch studs | 3-5/16 hub cover plate | **1008832ECH** |
| 200 | 4 | UG | Lever | #6–350 kcmil | #6–350 kcmil | Solid top | **1007944ECH** |
| 200 | 7 | OH/UG | Lever | #6–350 kcmil cu/al | #6–350 kcmil cu/al | 5x5 hub opening | **1007670ECH** |
| 200 | 7 | OH/UG | Lever | #6–350 kcmil | #6–350 kcmil | 5x5 hub opening | **UTTE7213TCH** |

***Note***

For dimensions, see **Pages V1-T4-16** and **V1-T4-17**.

## Dimensions

Approximate Dimensions in Inches (mm)

### Commercial Lever Bypass

| Catalog Number | Height | Width | Depth |
|---|---|---|---|
| **UTTH7336TCH** | 39.89 (1013.2) | 20.00 (508.0) | 6.50 (165.1) |
| **UTH73069THLCH** | N/A | N/A | N/A |
| **UTH73369UHLCH** | 39.89 (1013.2) | 20.00 (508.0) | 6.50 (165.1) |
| **UTH73369THLCH** | 39.89 (1013.2) | 20.00 (508.0) | 6.50 (165.1) |
| **UFTH7330UCH** | 39.89 (1013.2) | 20.00 (508.0) | 6.50 (165.1) |
| **UTH7336TCH** | 39.89 (1013.2) | 20.00 (508.0) | 6.50 (165.1) |
| **UTH7330UCH** | 39.89 (1013.2) | 20.00 (508.0) | 6.50 (165.1) |
| **UTH7330UFLCH** | 39.89 (1013.2) | 20.00 (508.0) | 6.50 (165.1) |
| **UATH7330UFLCH** ① | 39.89 (1013.2) | 20.00 (508.0) | 6.50 (165.1) |
| **UH7330TCPLCH** | 39.89 (1013.2) | 20.00 (508.0) | 6.50 (165.1) |
| **UTH7330TCH** | 39.89 (1013.2) | 20.00 (508.0) | 6.50 (165.1) |
| **UTTH7330TCH** | 39.89 (1013.2) | 20.00 (508.0) | 6.50 (165.1) |
| **UH7300UCPLCH** | 39.89 (1013.2) | 20.00 (508.0) | 6.50 (165.1) |
| **UTH7300UCH** | 39.89 (1013.2) | 20.00 (508.0) | 6.50 (165.1) |
| **UTH7300TCH** | 34.50 (876.3) | 15.00 (381.0) | 5.63 (143.0) |
| **UTH5330UFLCH** | 39.88 (1013.0) | 20.00 (508.0) | 6.50 (165.1) |
| **UTH5330UCH** | 39.88 (1013.0) | 20.00 (508.0) | 6.50 (165.1) |
| **UTH5300TCH** | 39.88 (1013.0) | 20.00 (508.0) | 6.50 (165.1) |
| **UATH5330UFLCH** | 39.88 (1013.0) | 20.00 (508.0) | 6.50 (165.1) |
| **UTH4320ACH** | 26.00 (660.4) | 15.00 (381.0) | 5.68 (144.3) |
| **UTH43209ACH** | N/A | N/A | N/A |
| **UTH4339UCH** | 36.63 (930.4) | 15.00 (381.0) | 5.69 (144.5) |
| **UTH4338UCH** | 29.00 (736.6) | 15.00 (381.0) | 5.69 (144.5) |
| **UTH4336UCH** | 36.63 (930.4) | 15.00 (381.0) | 5.69 (144.5) |
| **UTH4336TCH** | 36.63 (930.4) | 15.00 (381.0) | 5.69 (144.5) |
| **UTH43369UCH** | 36.63 (930.4) | 15.00 (381.0) | 5.69 (144.5) |
| **UTH43369TCH** | 36.63 (930.4) | 15.00 (381.0) | 5.69 (144.5) |
| **UTTH4330UCH** | 36.63 (930.4) | 15.00 (381.0) | 5.69 (144.5) |
| **UTH4330UCH** | 36.63 (930.4) | 15.00 (381.0) | 5.69 (144.5) |
| **UBTH4330TCH** | 36.63 (930.4) | 15.00 (381.0) | 5.69 (144.5) |
| **UTH4330TCH** | 36.63 (930.4) | 15.00 (381.0) | 5.69 (144.5) |
| **UTH4300UCH** | 34.50 (876.3) | 13.00 (330.2) | 4.94 (125.5) |
| **UTH4300TCH** | 34.50 (876.3) | 13.00 (330.2) | 4.94 (125.5) |
| **UH5300UKCCH** | 34.50 (876.3) | 13.00 (330.2) | 4.94 (125.5) |
| **UH43168UCPLCH** | 34.50 (876.3) | 15.00 (381.0) | 5.69 (144.5) |
| **UH43068TCPLCH** | 34.50 (876.3) | 13.00 (330.2) | 4.94 (125.5) |
| **UGTH4330UCH** | 36.63 (930.4) | 15.00 (381.0) | 5.69 (144.5) |
| **UGTH4330TCH** | 36.63 (930.4) | 15.00 (381.0) | 5.69 (144.5) |
| **UFTH7330TCH** | 39.88 (1013.0) | 20.00 (508.0) | 6.50 (165.1) |
| **UFTH4330TCH** | 36.63 (930.4) | 15.00 (381.0) | 5.69 (144.5) |

### Commercial Lever Bypass, continued

| Catalog Number | Height | Width | Depth |
|---|---|---|---|
| **UATH7336TCH** | 39.88 (1013.0) | 20.00 (508.0) | 6.50 (165.1) |
| **UATH5330UFLCH** | 39.88 (1013.0) | 20.00 (508.0) | 6.50 (165.1) |
| **UATH4336TCH** | 36.63 (930.4) | 15.00 (381.0) | 5.69 (144.5) |
| **UATH4330TCH** | 36.63 (930.4) | 15.00 (381.0) | 5.69 (144.5) |
| **1009788CH** | 34.50 (876.3) | 13.00 (330.2) | 4.94 (125.5) |
| **1009788ACH** ② | 34.50 (876.3) | 13.00 (330.2) | 4.94 (125.5) |
| **1009760ACH** | 36.63 (930.4) | 15.00 (381.0) | 5.68 (144.3) |
| **1009722CH** | 36.63 (930.4) | 15.00 (381.0) | 5.68 (144.3) |
| **782116975945** | 36.63 (930.4) | 15.00 (381.0) | 5.69 (144.5) |
| **1009260CH** | 36.63 (930.4) | 15.00 (381.0) | 5.69 (144.5) |
| **1009181CH** | 34.50 (876.3) | 15.00 (381.0) | 5.69 (144.5) |
| **1009018CH** | 63.00 (1600.2) | 12.97 (329.4) | 4.94 (125.5) |
| **1008950CH** | 39.88 (1013.0) | 20.00 (508.0) | 6.50 (165.1) |
| **1008948CH** | 36.63 (930.4) | 15.00 (381.0) | 5.69 (144.5) |
| **1008848CH** | 58.00 (1473.2) | 12.97 (329.4) | 4.94 (125.5) |
| **1008837CH** | 36.63 (930.4) | 15.00 (381.0) | 6.50 (165.1) |
| **1008836CH** | 36.63 (930.4) | 15.00 (381.0) | 6.50 (165.1) |
| **1008798CH** | 34.50 (876.3) | 15.00 (381.0) | 5.69 (144.5) |
| **1008793CH** | 34.50 (876.3) | 13.00 (330.2) | 4.94 (125.5) |
| **1008792CH** | 34.50 (876.3) | 13.00 (330.2) | 4.94 (125.5) |
| **1008543CH** | 39.89 (1013.2) | 20.00 (508.0) | 6.60 (167.6) |
| **1008541CH** | 36.63 (930.4) | 15.00 (381.0) | 5.69 (144.5) |
| **1008540CH** | N/A | N/A | N/A |
| **1008435CH** | 26.00 (660.4) | 15.00 (381.0) | 5.69 (144.5) |
| **1008191CH** | 36.63 (930.4) | 15.00 (381.0) | 5.69 (144.5) |
| **1008068CH** | 34.50 (876.3) | 16.44 (417.6) | 6.50 (165.1) |
| **1007818CH** | N/A | N/A | N/A |
| **1007801CH** | 28.50 (723.9) | 18.00 (457.2) | 5.69 (144.5) |
| **1007672CH** | 36.63 (930.4) | 15.00 (381.0) | 5.69 (144.5) |
| **1006344ACH** | 28.50 (723.9) | 18.00 (457.2) | 5.69 (144.5) |
| **1004984ACH** | 36.63 (930.4) | 15.00 (381.0) | 5.69 (144.5) |
| **1004771BCH** | 36.62 (930.1) | 15.00 (381.0) | 5.68 (144.3) |
| **UBTH7230ACH** | N/A | N/A | N/A |
| **UTH7233UCH** | 27.00 (685.8) | 16.00 (406.4) | 5.63 (143.0) |

***Notes***

① Aluminum enclosure.
② Bolted in shield.

Approximate Dimensions in Inches (mm)

### Commercial Lever Bypass, continued

| Catalog Number | Height | Width | Depth |
|---|---|---|---|
| UTE7213UFLCH | 19.00 (482.6) | 13.00 (330.2) | 4.94 (125.5) |
| UETH72137UCH | 19.00 (482.6) | 13.00 (330.2) | 4.94 (125.5) |
| UTE7213UCH | 19.00 (482.6) | 13.00 (330.2) | 4.94 (125.5) |
| UTE7213THLCH | 19.00 (482.6) | 13.00 (330.2) | 4.94 (125.5) |
| UBHRS212BCH | 19.00 (482.6) | 13.00 (330.2) | 4.94 (125.5) |
| UBEH7213TCH | 19.00 (482.6) | 13.00 (330.2) | 4.94 (125.5) |
| UFTE7213TCH ① | 19.00 (482.6) | 13.00 (330.2) | 4.94 (125.5) |
| UTE7213ZCH | 19.00 (482.6) | 13.00 (330.2) | 4.94 (125.5) |
| UTE7213TCH | 19.00 (482.6) | 13.00 (330.2) | 4.94 (125.5) |
| UTE7213CFLCH | 19.00 (482.6) | 13.00 (330.2) | 4.94 (125.5) |
| UTE7213CCH | 19.00 (482.6) | 13.00 (330.2) | 4.94 (125.5) |
| UBTE7213BCH | 19.00 (482.6) | 13.00 (330.2) | 4.94 (125.5) |
| UTE7213BCH | 19.00 (482.6) | 13.00 (330.2) | 4.94 (125.5) |
| UTE7210UCH | 24.69 (627.1) | 13.00 (330.2) | 4.94 (125.5) |
| UTE7203TCH | 19.00 (482.6) | 10.50 (266.7) | 4.94 (125.5) |
| UTE7203BCH | 19.00 (482.6) | 10.50 (266.7) | 4.94 (125.5) |
| UETH5213UCH | 19.00 (482.6) | 13.00 (330.2) | 4.94 (125.5) |
| UTE5213TCH | 19.00 (482.6) | 13.00 (330.2) | 4.94 (125.5) |
| UTTE5213TCH | 19.00 (482.6) | 13.00 (330.2) | 4.94 (125.5) |
| UTE5213CCH | 19.00 (482.6) | 13.00 (330.2) | 4.94 (125.5) |
| UTE5213BNDCH | 19.00 (482.6) | 13.00 (330.2) | 4.94 (125.5) |
| UTE5213ZCH | 19.00 (482.6) | 13.00 (330.2) | 4.94 (125.5) |
| UTE5213UFLCH | 19.00 (482.6) | 13.00 (330.2) | 4.94 (125.5) |
| UTE5213CFLCH | 19.00 (482.6) | 13.00 (330.2) | 4.94 (125.5) |
| UTE5213BCH | 19.00 (482.6) | 13.00 (330.2) | 4.94 (125.5) |
| UTE5210CCH | 20.13 (511.3) | 13.00 (330.2) | 4.94 (125.5) |
| UTE5203BCH | 19.00 (482.6) | 10.50 (266.7) | 4.94 (125.5) |
| UTE4213ZCH | 19.00 (482.6) | 13.00 (330.2) | 4.94 (125.5) |
| UGTE4213CCH | 19.00 (482.6) | 13.00 (330.2) | 4.94 (125.5) |
| UTE4213TCH | 19.00 (482.6) | 13.00 (330.2) | 4.94 (125.5) |
| UTTE4213UCH ② | 19.00 (482.6) | 13.00 (330.2) | 4.94 (125.5) |
| UTE4213CCH | 19.00 (482.6) | 13.00 (330.2) | 4.94 (125.5) |
| UTE4213BCH | 19.00 (482.6) | 13.00 (330.2) | 4.94 (125.5) |
| UTE4203BCH | 19.00 (482.6) | 10.50 (266.7) | 4.94 (125.5) |
| UIH7213UCVCH | 19.00 (482.6) | 13.00 (330.2) | 4.94 (125.5) |
| UE7213CCCCH | 19.00 (482.6) | 13.00 (330.2) | 4.94 (125.5) |
| UE7213CCPLCH | 19.00 (482.6) | 13.00 (330.2) | 4.94 (125.5) |
| UE7213BCPLCH | 19.00 (482.6) | 13.00 (330.2) | 4.94 (125.5) |

### Commercial Lever Bypass, continued

| Catalog Number | Height | Width | Depth |
|---|---|---|---|
| UGTE4213BCH | 19.00 (482.6) | 13.00 (330.2) | 4.94 (125.5) |
| UGE4213CCCCH | 19.00 (482.6) | 13.00 (330.2) | 4.94 (125.5) |
| UFTE7213BCH | 19.00 (482.6) | 13.00 (330.2) | 4.94 (125.5) |
| UATE7213TCH | 19.00 (482.6) | 13.00 (330.2) | 4.94 (125.5) |
| UATE5213CCH | 19.00 (482.6) | 13.00 (330.2) | 4.94 (125.5) |
| UATE4213UFLCH | 19.00 (482.6) | 13.00 (330.2) | 4.94 (125.5) |
| UBGTE4203BCH | 19.00 (482.6) | 10.50 (266.7) | 4.94 (125.5) |
| 1009845ECH | 64.00 (1625.6) | 11.00 (279.4) | 6.00 (152.4) |
| 1008801ECH | 19.00 (482.6) | 13.00 (330.2) | 4.94 (125.5) |
| 1008832ECH | 24.69 (627.1) | 13.00 (330.2) | 4.94 (125.5) |
| 1007944ECH | 22.00 (558.8) | 16.00 (406.4) | 5.69 (144.5) |
| 1007670ECH | 19.00 (482.6) | 13.00 (330.2) | 4.94 (125.5) |
| UTTE7213TCH | 19.00 (482.6) | 13.00 (330.2) | 4.94 (125.5) |

***Notes***

① Barrel lock.

② TT = quadplex ground.

**Multiple Position Horizontal Ganged Sockets**

## Contents


| *Description* | *Page* |
|---|---|
| Catalog Number Selection | **V1-T4-19** |
| Product Selection | **V1-T4-20** |
| Dimensions | **V1-T4-23** |


## Product Description

- Available in 100 A and 200 A designs
- Available in 2-position through 6-position designs
- Multiple service design offerings
- Multiple line/load lug configurations
- Residential or lever bypass socket designs
- Multiple hub opening and closure plate sizes available

## Catalog Number Selection

### Single Meter Sockets 2R-6R and 2H-6H Group

**UT 2R 1 1 2 1 B CH**

**Note:** The "U" prefix is always used first followed by other prefixes required in alphabetical order.

**Standard Prefixes**

- **A** = Aluminum enclosure
- **B** = Barrel lock provision, for an exposed INNER-TITE or Brooks barrel lock; unit includes an internal lock receiver bracket
- **F** = Barrel lock with guard provision, for a lock guard INNER-TITE or Brooks barrel lock; unit includes an internal lock receiver bracket
- **G** = Grounded fifth terminal (9 o'clock position)
- **H** = Horn bypass
- **I** = Inhibitor installed in wire connectors
- **M** = Temporary meter cover (waxed cardboard)
- **N** = No sealing ring (applies only to ring style sockets)
- **R** = Ring style socket
- **S** = Aluminum screw type sealing ring (applies only to ring style sockets)
- **T** = Grounding connector (#14–#2 Cu) for triplex ground
- **TT** = Two grounding connectors (#14–#2 Cu) for quadplex ground
- **U** = UL label
- **Z** = 5/16-inch hex head connector screw in place of slotted (100 A only)

**Product Group**

- **RS** = Residential service, single position
- **2R-6R** = Residential service, multiple position
- **2H-6H** = Commercial or residential service, multiple position
- **H** = Commercial or residential service, single position

**Ampere Rating**

- **1** = 100 A
- **2** = 200 A

**Service Design**

- **0** = Overhead
- **1** = Combination overhead/underground
- **2** = Underground, side wired
- **3** = Combination overhead/underground, side wired
- **4** = End feed

**Maximum Line Conductor**

- **0** = 0.38-inch stud connectors
- **1** = #2/0 connectors
- **2** = #250 kcmil connectors
- **3** = #350 kcmil connectors
- **5** = #500 kcmil connectors
- **6** = #600 kcmil connectors
- **7** = #750 kcmil connectors
- **8** = Dual #500 kcmil connectors

**Maximum Load Conductor**

- **0** = 0.38-inch stud connectors
- **1** = #2/0 connectors
- **2** = #250 kcmil connectors
- **3** = #350 kcmil connectors
- **5** = #500 kcmil connectors
- **6** = #600 kcmil connectors
- **7** = #750 kcmil connectors
- **8** = Dual #500 kcmil connectors

**Standard Suffixes**

- **A** = Solid top
- **B** = Small hub opening
- **C** = Small hub closing plate mounted
- **L** = 1.25-inch (31.8 mm) hub mounted
- **M** = 1.50-inch (38.1 mm) hub mounted
- **N** = 2.00-inch (50.8 mm) hub mounted
- **P** = 2.50-inch (63.5 mm) hub mounted
- **T** = Large hub opening hub
- **U** = Large hub cover plate hub mounted
- **V** = 2.50-inch (63.5 mm) large hub mounted
- **Q** = 3.00-inch (76.2 mm) large hub mounted
- **R** = 3.50-inch (88.9 mm) large hub mounted
- **S** = 4.00-inch (101.6 mm) large hub mounted
- **Z** = Large to small hub adapter mounted

## Product Selection

UT2R2332BCH

### Horizontal Design—Multi Position Ringless

| Ampere Rating | Jaws | Position | Service | Bypass | Connections Line | Load | Opening, Hub or Closure Plate | Catalog Number |
|---|---|---|---|---|---|---|---|---|
| 200 | 4 | 2 | OH/UG | Horn | #6–350 kcmil | #8–250 kcmil | 5x5 hub opening | **1004401BCH** |
| 200 | 4 | 3 | OH/UG | Horn | #6–350 kcmil | #8–250 kcmil | 5x5 hub opening | **1004404BCH** |
| 200 | 5 | 2 | OH/UG | Horn | #6–350 kcmil | #8–250 kcmil | 5x5 hub opening | **1004418ACH** |
| 200 | 4 | 2 | OH/UG | — | 3/8-inch stud | #8–250 kcmil | 5x5 hub cover plate | **1006737BCH** |
| 200 | 4 | 2 | OH/UG | Horn | 3/8-inch stud | #8–250 kcmil | 5x5 hub opening | **1007700CH** |
| 200 | 4 | 3 | OH/UG | Horn | 3/8-inch stud | #8–250 kcmil | Hub opening | **1007701CH** |
| 200 | 4 | 2 | OH/UG | Horn | #6–350 kcmil | #8–250 kcmil | 5x5 hub cover plate | **1008842CH** |
| 200 | 4 | 3 | OH/UG | Horn | 1/0–500 kcmil cu/al | #8–250 kcmil | 5x5 hub cover plate | **1008843CH** |
| 200 | 4 | 4 | OH/UG | Horn | 1/0–500 kcmil cu/al | #8–250 kcmil | 5x5 hub cover plate | **1008844CH** |
| 200 | 4 | 2 | OH/UG | Horn | #6–350 kcmil | #8–250 kcmil | 5x5 hub cover plate | **1008958CH** |
| 200 | 4 | 3 | OH/UG | Horn | 1/0–500 kcmil cu/al | #8–250 kcmil | 5x5 hub cover plate | **1008959CH** |
| 200 | 4 | 4 | OH/UG | Horn | 1/0–500 kcmil cu/al | #8–250 kcmil | 5x5 hub cover plate | **1008960CH** |
| 200 | 4 | 5 | OH/UG | Horn | (2) 1/0–500 kcmil cu/al | #8–250 kcmil | (2) 5x5 hub cover plate | **1009579ACH** |
| 200 | 4 | 4 | OH/UG | Horn | 1/0–500 kcmil cu/al | #8–250 kcmil | 5x5 hub opening | **U4R2352TDQCH** |
| 200 | 4 | 5 | OH/UG | Horn | (2) 1/0–500 kcmil cu/al | #8–250 kcmil | (2) 5x5 hub opening | **U5R2392TTDQCH** |
| 200 | 4 | 6 | OH/UG | Horn | (2) 1/0–500 kcmil cu/al | #8–250 kcmil | 5x5 hub opening (2) places | **U6R2392TTDQCH** |
| 200 | 4 | 4 | OH/UG | Horn | 1/0–500 kcmil cu/al | #8–250 kcmil | 5x5 hub opening | **UBH4R2352TCH** |
| 200 | 4 | 2 | OH/UG | Horn | #6–350 kcmil | #8–250 kcmil | 5x5 hub opening | **UBH2R2332TCH** |
| 200 | 4 | 3 | OH/UG | Horn | #6–350 kcmil | #8–250 kcmil | 5x5 hub opening | **UBH3R2332TCH** |
| 200 | 4 | 4 | OH/UG | Horn | 3/8-inch stud | #8–250 kcmil | 5x5 hub cover plate | **UEHT4R2302UCH** |
| 200 | 4 | 3 | OH/UG | Horn | 3/8-inch stud | #8–250 kcmil | 5x5 hub cover plate | **UEHT3R2302UCH** |
| 200 | 4 | 2 | OH/UG | Horn | 3/8-inch stud | #8–250 kcmil | 5x5 hub cover plate | **UEHT2R2302UCH** |
| 200 | 4 | 2 | UG | Horn | #6–350 kcmil | #8–250 kcmil | Solid top | **UHI2R2332ACVCH** |
| 200 | 4 | 2 | OH/UG | Horn | #6–350 kcmil | #8–250 kcmil | Hub opening | **UHI2R2332TCVCH** |
| 200 | 4 | 4 | UG | Horn | 1/0–500 kcmil cu/al | #8–250 kcmil | Solid top | **UHI4R2352ACVCH** |
| 200 | 4 | 2 | OH/UG | Horn | #6–350 kcmil | #8–250 kcmil | 5x5 hub cover plate | **UHTT2R2332UCH** |
| 200 | 4 | 2 | OH/UG | Horn | #6–350 kcmil | #8–250 kcmil | 5x5 hub opening | **UHT2R2332TCH** |
| 200 | 4 | 3 | OH/UG | Horn | #6–350 kcmil | #8–250 kcmil | 5x5 hub opening | **UHT3R2332TCH** |
| 200 | 4 | 3 | OH/UG | Horn | 1/0–500 kcmil cu/al | #8–250 kcmil | 5x5 hub cover plate | **UHT3R2352UCH** |
| 200 | 4 | 4 | OH/UG | Horn | 1/0–500 kcmil cu/al | #8–250 kcmil | 5x5 hub opening | **UHT4R2352TCH** |
| 200 | 4 | 4 | OH/UG | — | 1/0–500 kcmil cu/al | #8–250 kcmil | 5x5 hub cover plate | **UT4R2352UFLCH** |
| 200 | 4 | 4 | OH/UG | Horn | 1/0–500 kcmil cu/al | #8–250 kcmil | 5x5 hub cover plate | **UHT4R2352UCH** |
| 200 | 5 | 2 | OH/UG | Lever | 1/0–500 kcmil cu/al | #6–350 kcmil | 5x5 hub opening | **UT2H52353TCH** |
| 200 | 4 | 2 | OH/UG | Horn | #6–350 kcmil | #8–250 kcmil | 5x5 hub cover plate | **UHT2R2332UCH** |
| 200 | 4 | 2 | OH/UG | — | #6–350 kcmil | #8–250 kcmil | 3-5/16 hub opening | **UT2R2332BCH** |
| 200 | 4 | 2 | OH/UG | — | #6–350 kcmil | #8–250 kcmil | 5x5 hub opening | **UAT2R2332TCH** ① |
| 200 | 4 | 2 | OH/UG | — | #6–350 kcmil | #8–250 kcmil | 5x5 hub opening | **UT2R2332TCH** |
| 200 | 4 | 2 | OH/UG | — | #6–350 kcmil | #8–250 kcmil | 5x5 hub opening | **U2R2332TCPLCH** |
| 200 | 4 | 2 | OH/UG | — | #6–350 kcmil | #8–250 kcmil | 5x5 hub cover plate | **U2R2332UCPLCH** |
| 200 | 4 | 2 | OH/UG | Horn | #6–350 kcmil | #8–250 kcmil | 5x5 hub opening | **U2R2332TDQCH** |
| 200 | 4 | 2 | OH/UG | — | #6–350 kcmil | #8–250 kcmil | 5x5 hub cover plate | **UT2R2332UCH** |
| 200 | 4 | 3 | OH/UG | Horn | #6–350 kcmil | #8–250 kcmil | Large 5X5 hub opening | **U3R2332TDQCH** |

***Notes***

① Aluminum enclosure.

For dimensions, see **Pages V1-T4-23** and **V1-T4-24**.

UT2R1121BCH

## Horizontal Design—Multi Position Ringless, continued

| Ampere Rating | Jaws | Position | Service | Bypass | Connections Line | Load | Opening, Hub or Closure Plate | Catalog Number |
|---|---|---|---|---|---|---|---|---|
| 200 | 4 | 3 | OH/UG | Lever | 1/0–500 kcmil cu/al | #6–350 kcmil | 5x5 hub opening | **UT3H42353TCH** |
| 200 | 5 | 3 | OH/UG | Lever | 1/0–500 kcmil cu/al | #6–350 kcmil | 5x5 hub opening | **UT3H52353TCH** |
| 200 | 7 | 3 | OH/UG | Lever | 1/0–500 kcmil cu/al | #6–350 kcmil | 5x5 hub cover plate | **UT3H72353UHLCH** |
| 200 | 4 | 3 | OH/UG | — | #6–350 kcmil | #8–250 kcmil | 5x5 hub opening | **UT3R2332TCH** |
| 200 | 4 | 3 | OH/UG | — | #6–350 kcmil | #8–250 kcmil | 5x5 hub cover plate | **UT3R2332UCH** |
| 200 | 4 | 3 | OH/UG | — | 1/0–500 kcmil cu/al | #8–250 kcmil | 5x5 hub opening | **UT3R2352TCH** |
| 200 | 4 | 4 | OH/UG | — | 1/0–500 kcmil cu/al | #8–250 kcmil | 5x5 hub opening | **UT4R2352TCH** |
| 200 | 4 | 5 | OH/UG | Horn | (2) 1/0–500 kcmil cu/al | #8–250 kcmil | 5x5 hub opening (in two places) | **UHT5R2392TTCH** |
| 200 | 4 | 5 | OH/UG | — | (2) 1/0–500 kcmil cu/al | #8–250 kcmil | 5x5 hub opening (in two places) | **UT5R2392TTCH** |
| 200 | 7 | 5 | OH/UG | Lever | Dual 1/0–500 kcmil | #6–350 kcmil | (2) 5X5 hub closure plates | **UT5H72393UUHLCH** |
| 200 | 4 | 6 | OH/UG | Horn | (2) 1/0–500 kcmil cu/al | #8–250 kcmil | 5x5 hub opening (in two places) | **UHT6R2392TTCH** |
| 200 | 4 | 6 | OH/UG | — | (2) 1/0–500 kcmil cu/al | #8–250 kcmil | 5x5 hub opening (in two places) | **UT6R2392TTCH** |
| 200 | 4 | 6 | OH/UG | — | (2) 1/0–500 kcmil cu/al | #8–250 kcmil | 5x5 closure plate (in two places) | **UT6R2392UUFLCH** |
| 200 | 7 | 6 | OH/UG | Lever | Dual 1/0–500 kcmil | #6–350 kcmil | 5x5 closure plate (in two places) | **UT6H72393UUHLCH** |
| 200 | 4 | 6 | OH/UG | Horn | (2) 1/0–500 kcmil cu/al | #8–250 kcmil | 5x5 hub opening (in two places) | **UHT6R2392TTCH** |
| 150 | 4 | 2 | OH/UG | Horn | #6–350 kcmil | #8–250 kcmil | 3-5/16 hub opening | **U2R5432BDQCH** |
| 150 | 4 | 5 | OH/UG | — | #6–350 kcmil | #8–250 kcmil | 3-5/16 hub opening (in two places) | **UT5R5632BCH** |
| 100 | 4 | 6 | OH/UG | — | #6–350 kcmil | #8–2/0 cu/al | 3-5/16 hub opening | **UT6R1131BCH** |
| 100 | 4 | 2 | OH/UG | Horn | #6–250 kcmil | #8–2/0 cu/al | 5x5 hub opening | **1004426ACH** |
| 100 | 4 | 2 | OH/UG | Horn | #6–250 kcmil | #8–2/0 cu/al | 3-5/16 hub opening | **1008951CH** |
| 100 | 4 | 3 | OH/UG | Horn | #6–250 kcmil | #8–2/0 cu/al | 3-5/16 hub opening | **1008952CH** |
| 100 | 4 | 2 | OH/UG | Horn | #6–250 kcmil | #8–2/0 cu/al | 3-5/16 hub cover plate | **1009693CH** |
| 100 | 4 | 3 | OH/UG | Horn | #6–250 kcmil | #8–2/0 cu/al | 3-5/16 hub cover plate | **1009694CH** |
| 100 | 4 | 4 | OH/UG | Horn | #6–250 kcmil | #8–2/0 cu/al | 3-5/16 hub cover plate | **1009695CH** |
| 100 | 4 | 5 | OH/UG | Horn | #6–250 kcmil | #8–2/0 cu/al | 3-5/16 hub cover plate | **1009696CH** |
| 100 | 4 | 6 | OH/UG | — | #6–350 kcmil | #8–2/0 cu/al | 3-5/16 hub cover plate | **UATZ6R1131CFLCH** ① |
| 100 | 4 | 2 | OH/UG | Horn | #6–250 kcmil | #8–2/0 cu/al | 3-5/16 hub opening | **UBH2R1121BCH** |
| 100 | 4 | 3 | OH/UG | Horn | #6–250 kcmil | #8–2/0 cu/al | 3-5/16 hub opening | **UBH3R1121BCH** |
| 100 | 4 | 4 | OH/UG | Horn | #6–250 kcmil | #8–2/0 cu/al | 3-5/16 hub opening | **UBH4R1121BCH** |
| 100 | 4 | 2 | OH/UG | Horn | #6–250 kcmil | #8–2/0 cu/al | 3-5/16 hub opening | **UHT2R1121BCH** |
| 100 | 4 | 4 | OH/UG | — | #6–250 kcmil | #8–2/0 cu/al | 3-5/16 hub opening | **UT4R1121BCH** |
| 100 | 4 | 4 | OH/UG | — | #6–250 kcmil | #8–2/0 cu/al | 3-5/16 closure plate | **UT4R1121CCH** |
| 100 | 4 | 4 | OH/UG | Horn | #6–250 kcmil | #8–2/0 cu/al | 3-5/16 hub opening | **UHT4R1121BCH** |
| 100 | 4 | 5 | OH/UG | Horn | #6–250 kcmil | #8–2/0 cu/al | 3-5/16 hub opening | **UHT5R1121BCH** |
| 100 | 4 | 5 | OH/UG | — | #6–250 kcmil | #8–2/0 cu/al | 3-5/16 hub opening | **UT5R1121BCH** |
| 100 | 4 | 5 | OH/UG | — | #6–250 kcmil | #8–2/0 cu/al | 3-5/16 closure plate | **UT5R1121CCH** |
| 100 | 4 | 2 | OH/UG | — | #6–250 kcmil | #8–2/0 cu/al | 3-5/16 hub opening | **UT2R1121BCH** |
| 100 | 4 | 2 | OH/UG | — | #6–250 kcmil | #8–2/0 cu/al | 3-5/16 closure plate | **UT2R1121CCH** |
| 100 | 4 | 2 | OH/UG | Horn | #6–250 kcmil | #8–2/0 cu/al | 3-5/16 closure plate | **UHT2R1421CCH** |
| 100 | 4 | 2 | OH/UG | — | #6–250 kcmil | #8–2/0 cu/al | 3-5/16 hub opening<br>3-5/16 hub cover plate | **UT2R1421BCH** |
| 100 | 4 | 3 | OH/UG | Horn | #6–250 kcmil | #8–2/0 cu/al | 3-5/16 hub opening | **UHT3R1121BCH** |
| 100 | 4 | 3 | OH/UG | — | #6–250 kcmil | #8–2/0 cu/al | 3-5/16 hub opening | **UT3R1121BCH** |

***Notes***

① Aluminum enclosure.

For dimensions, see **Pages V1-T4-23** and **V1-T4-24**.

## Horizontal Design—Multi Position Ring Type

| Ampere Rating | Jaws | Position | Service | Bypass | Connections Line | Load | Opening, Hub or Closure Plate | Catalog Number |
|---|---|---|---|---|---|---|---|---|
| 200 | 4 | 2 | OH/UG | — | 1/0–500 kcmil cu/al | #8–250 kcmil | 5x5 hub opening | **U2R2352TCRCH** |
| 200 | 4 | 2 | OH/UG | — | #6–350 kcmil | #8–250 kcmil | 5x5 hub cover plate | **URT2R2332UCH** |
| 200 | 5 | 4 | OH/UG | — | 1/0–500 kcmil cu/al | #8–250 kcmil | Large 5x5 hub opening | **U4R2352TCRCH** |
| 125 | 5 | 2 | OH | — | #8–350 kcmil | #8–2/0 cu/al | Hub opening | **U2V1031BCRCH** ① |
| 125 | 5 | 3 | OH | — | #8–350 kcmil | #8–2/0 cu/al | Hub opening | **U3V1031BCRCH** ① |
| 100 | 5 | 2 | OH/UG | — | #6–250 kcmil | #8–2/0 cu/al | 3-5/16 opening | **U2R1121BCRCH** |
| 100 | 5 | 3 | OH/UG | — | #6–250 kcmil | #8–2/0 cu/al | 3-5/16 opening | **U3R1121BCRCH** |
| 100 | 5 | 4 | OH/UG | — | #6–250 kcmil | #8–2/0 cu/al | 3-5/16 opening | **U4R1121BCRCH** |
| 100 | 5 | 5 | OH/UG | — | #6–250 kcmil | #8–2/0 cu/al | 3-5/16 opening | **U5R1121BCRCH** |

***Notes***

① Vertical gang.

For dimensions, see **Pages V1-T4-23** and **V1-T4-24**.

## Dimensions

Approximate Dimensions in Inches (mm)

### Horizontal Design—Multi Position Ringless

| Catalog Number | Height | Width | Depth |
|---|---|---|---|
| 1004401BCH | 14.13 (358.9) | 24.31 (617.5) | 5.38 (136.7) |
| 1004404BCH | 14.13 (358.9) | 32.47 (824.7) | 5.38 (136.7) |
| 1004418ACH | 14.13 (358.9) | 24.31 (617.5) | 5.38 (136.7) |
| 1006737BCH | 14.13 (358.9) | 24.31 (617.5) | 5.38 (136.7) |
| 1007700CH | 14.13 (358.9) | 24.31 (617.5) | 5.38 (136.7) |
| 1007701CH | 14.13 (358.9) | 32.47 (824.7) | 5.38 (136.7) |
| 1008842CH | 14.13 (358.9) | 24.31 (617.5) | 5.38 (136.7) |
| 1008843CH | 14.13 (358.9) | 32.47 (824.7) | 5.38 (136.7) |
| 1008844CH | 14.13 (358.9) | 40.63 (1032.0) | 5.38 (136.7) |
| 1008958CH | 14.13 (358.9) | 24.31 (617.5) | 5.38 (136.7) |
| 1008959CH | 14.13 (358.9) | 32.47 (824.7) | 5.38 (136.7) |
| 1008960CH | 14.13 (358.9) | 40.63 (1032.0) | 5.38 (136.7) |
| 1009579ACH | 14.13 (358.9) | 54.78 (1391.4) | 5.38 (136.7) |
| U4R2352TDQCH | 14.13 (358.9) | 40.63 (1032.0) | 5.38 (136.7) |
| U5R2392TTDQCH | 14.13 (358.9) | 62.94 (1598.7) | 5.38 (136.7) |
| U6R2392TTDQCH | 14.13 (358.9) | 62.94 (1598.7) | 5.38 (136.7) |
| UBH4R2352TCH | 14.13 (358.9) | 40.63 (1032.0) | 5.38 (136.7) |
| UBH2R2332TCH | 14.13 (358.9) | 24.31 (617.5) | 5.38 (136.7) |
| UBH3R2332TCH | 14.13 (358.9) | 32.47 (824.7) | 5.38 (136.7) |
| UEHT4R2302UCH | 14.13 (358.9) | 40.63 (1032.0) | 5.38 (136.7) |
| UEHT3R2302UCH | 14.13 (358.9) | 32.47 (824.7) | 5.38 (136.7) |
| UEHT2R2302UCH | 14.13 (358.9) | 24.31 (617.5) | 5.38 (136.7) |
| UHI2R2332ACVCH | 14.13 (358.9) | 24.31 (617.5) | 5.38 (136.7) |
| UHI2R2332TCVCH | 14.13 (358.9) | 24.31 (617.5) | 5.38 (136.7) |
| UHI4R2352ACVCH | 14.13 (358.9) | 40.63 (1032.0) | 5.38 (136.7) |
| UHTT2R2332UCH | 14.13 (358.9) | 24.31 (617.5) | 5.38 (136.7) |
| UHT2R2332TCH | 14.13 (358.9) | 24.31 (617.5) | 5.38 (136.7) |
| UHT3R2332TCH | 14.13 (358.9) | 32.94 (836.7) | 5.38 (136.7) |
| UHT3R2352UCH | 14.13 (358.9) | 32.47 (824.7) | 5.38 (136.7) |
| UHT4R2352TCH | 14.13 (358.9) | 40.63 (1032.0) | 5.38 (136.7) |
| UT4R2352UFLCH | 14.13 (358.9) | 40.63 (1032.0) | 5.38 (136.7) |
| UHT4R2352UCH | 14.13 (358.9) | 40.63 (1032.0) | 5.38 (136.7) |
| UT2H52353TCH | 23.56 (598.4) | 32.78 (832.6) | 6.00 (152.4) |
| UHT2R2332UCH | 14.13 (358.9) | 24.31 (617.5) | 5.38 (136.7) |
| UT2R2332BCH | 14.13 (358.9) | 24.31 (617.5) | 5.38 (136.7) |
| UAT2R2332TCH ① | 14.13 (358.9) | 24.31 (617.5) | 5.38 (136.7) |
| UT2R2332TCH | 14.13 (358.9) | 24.31 (617.5) | 5.38 (136.7) |
| U2R2332TCPLCH | 14.13 (358.9) | 24.31 (617.5) | 5.38 (136.7) |
| U2R2332UCPLCH | 14.13 (358.9) | 24.31 (617.5) | 5.38 (136.7) |
| U2R2332TDQCH | 14.13 (358.9) | 24.31 (617.5) | 5.38 (136.7) |
| UT2R2332UCH | 14.13 (358.9) | 24.31 (617.5) | 5.38 (136.7) |
| U3R2332TDQCH | 14.13 (358.9) | 32.47 (824.7) | 5.38 (136.7) |
| UT3H42353TCH | 23.56 (598.4) | 43.91 (1115.3) | 6.00 (152.4) |
| UT3H52353TCH | 23.56 (598.4) | 43.91 (1115.3) | 6.00 (152.4) |
| UT3H72353UHLCH | 23.56 (598.4) | 43.91 (1115.3) | 5.38 (136.7) |

### Horizontal Design—Multi Position Ringless, continued

| Catalog Number | Height | Width | Depth |
|---|---|---|---|
| UT3R2332TCH | 14.13 (358.9) | 32.47 (824.7) | 5.38 (136.7) |
| UT3R2332UCH | 14.13 (358.9) | 32.47 (824.7) | 5.38 (136.7) |
| UT3R2352TCH | 14.13 (358.9) | 40.63 (1032.0) | 5.38 (136.7) |
| UT4R2352TCH | 14.13 (358.9) | 40.63 (1032.0) | 5.38 (136.7) |
| UHT5R2392TTCH | 14.13 (358.9) | 54.78 (1391.4) | 5.38 (136.7) |
| UT5R2392TTCH | 14.13 (358.9) | 54.78 (1391.4) | 5.38 (136.7) |
| UT5H72393UUHLCH | 29.56 (750.8) | 72.15 (1832.6) | 6.00 (152.4) |
| UHT6R2392TTCH | 14.13 (358.9) | 62.94 (1598.7) | 5.38 (136.7) |
| UT6R2392TTCH | 14.13 (358.9) | 62.94 (1598.7) | 5.38 (136.7) |
| UT6R2392UUFLCH | 14.13 (358.9) | 62.94 (1598.7) | 5.38 (136.7) |
| UT6H72393UUHLCH | 23.56 (598.4) | 83.28 (2115.3) | 6.00 (152.4) |
| UHT6R2392TTCH | 14.13 (358.9) | 62.94 (1598.7) | 5.38 (136.7) |
| U2R5432BDQCH | 14.13 (358.9) | 20.16 (512.1) | 5.38 (136.7) |
| UT5R5632BCH | 14.13 (358.9) | 48.63 (1235.2) | 5.38 (136.7) |
| UT6R1131BCH | 14.13 (358.9) | 56.93 (1446.0) | 4.50 (114.3) |
| 1004426ACH | 14.13 (358.9) | 24.31 (617.5) | 4.50 (114.3) |
| 1008951CH | 14.13 (358.9) | 24.31 (617.5) | 4.50 (114.3) |
| 1008952CH | 14.13 (358.9) | 32.47 (824.7) | 4.50 (114.3) |
| 1009693CH | 14.13 (358.9) | 24.16 (613.7) | 5.38 (136.7) |
| 1009694CH | 14.13 (358.9) | 32.31 (820.7) | 5.38 (136.7) |
| 1009695CH | 14.13 (358.9) | 49.94 (1268.5) | 5.38 (136.7) |
| 1009696CH | 14.13 (358.9) | 48.63 (1235.2) | 5.38 (136.7) |
| UATZ6R1131CFLCH | 14.13 (358.9) | 56.94 (1446.3) | 4.50 (114.3) |
| UBH2R1121BCH | 14.13 (358.9) | 24.94 (633.5) | 4.50 (114.3) |
| UBH3R1121BCH | 14.13 (358.9) | 32.47 (824.7) | 4.50 (114.3) |
| UBH4R1121BCH | 14.13 (358.9) | 40.63 (1032.0) | 4.50 (114.3) |
| UHT2R1121BCH | 14.13 (358.9) | 24.31 (617.5) | 4.50 (114.3) |
| UT4R1121BCH | 14.13 (358.9) | 40.63 (1032.0) | 4.50 (114.3) |
| UT4R1121CCH | 14.13 (358.9) | 40.63 (1032.0) | 4.50 (114.3) |
| UHT4R1121BCH | 14.13 (358.9) | 40.63 (1032.0) | 4.50 (114.3) |
| UHT5R1121BCH | 14.13 (358.9) | 48.78 (1239.0) | 4.50 (114.3) |
| UT5R1121BCH | 14.13 (358.9) | 48.78 (1239.0) | 4.50 (114.3) |
| UT5R1121CCH | 14.13 (358.9) | 48.78 (1239.0) | 4.50 (114.3) |
| UT2R1121BCH | 14.13 (358.9) | 24.31 (617.5) | 4.50 (114.3) |
| UT2R1121CCH | 14.13 (358.9) | 24.31 (617.5) | 4.50 (114.3) |
| UHT2R1421CCH | 14.13 (358.9) | 20.16 (512.1) | 5.38 (136.7) |
| UT2R1421BCH | 14.13 (358.9) | 20.16 (512.1) | 5.38 (136.7) |
| UHT3R1121BCH | 14.13 (358.9) | 32.47 (824.7) | 4.50 (114.3) |
| UT3R1121BCH | 14.13 (358.9) | 32.47 (824.7) | 4.50 (114.3) |

***Note***

① Aluminum enclosure.

Approximate Dimensions in Inches (mm)

### Horizontal Design—Multi Position Ring Type

| Catalog Number | Height | Width | Depth |
|---|---|---|---|
| **U2R2352TCRCH** | 14.13 (358.9) | 24.31 (617.5) | 5.38 (136.7) |
| **URT2R2332UCH** | 14.13 (358.9) | 24.31 (617.5) | 5.38 (136.7) |
| **U4R2352TCRCH** | 14.13 (358.9) | 48.00 (1219.2) | 5.38 (136.7) |
| **U2V1031BCRCH** ① | 8.00 (203.2) | 25.63 (650.9) | 4.38 (111.1) |
| **U3V1031BCRCH** ① | 8.00 (203.2) | 35.88 (911.2) | 4.38 (111.1) |
| **U2R1121BCRCH** | 14.13 (358.9) | 28.00 (711.2) | 4.50 (114.3) |
| **U3R1121BCRCH** | 14.13 (358.9) | 38.00 (965.2) | 4.50 (114.3) |
| **U4R1121BCRCH** | 14.13 (358.9) | 48.00 (1219.2) | 4.50 (114.3) |
| **U5R1121BCRCH** | 14.13 (358.9) | 58.00 (1473.2) | 4.50 (114.3) |

***Note***

① Vertical gang.

Instrument Rated Sockets

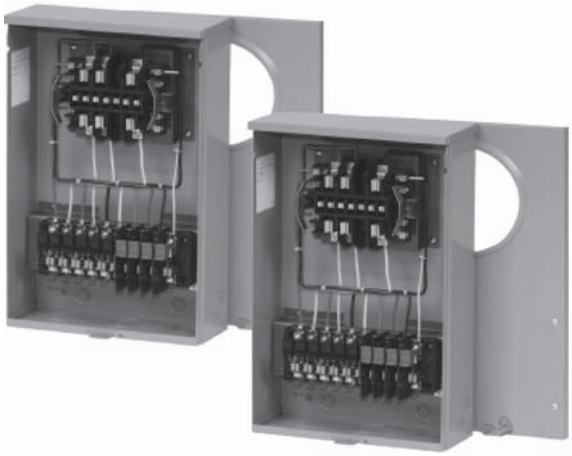

## Contents

| *Description* | *Page* |
|---|---|
| Product Selection | **V1-T4-26** |
| Dimensions | **V1-T4-26** |



## Product Description

- Available in 6, 7, 8 and 13 terminal designs
- 20 A ratings standard
- Multiple service designs available (overhead, underground, overhead/ underground)
- Multiple hub opening and closure plate sizes available
- 600 Vac rated
- Single cover/dual cover availability
- Provisional test switches and factory-installed test switch designs available

## Product Selection

USTS132CCH

### Instrument Rated Sockets

| Ampere Rating | Jaws | Service | Opening, Hub or Closure Plate | Catalog Number |
|---|---|---|---|---|
| 20 | 13 terminal | UG | Solid top | **USTH131A123CH** |
| 20 | 13 terminal | OH/UG | 3-5/16 hub cover plate | **USTS131B102CH** |
| 20 | 13 terminal | OH/UG | 3-5/16 hub cover plate | **USTS132B101CH** |
| 20 | 13 terminal | OH/UG | 3-5/16 hub cover plate | **USTS132CCH** |
| 20 | 13 terminal | OH/UG | 1-inch bolt-on hub | **1008694ACH** |
| 20 | 8 terminal | OH/UG | 1-inch bolt-on hub | **1008695ACH** |
| 20 | 13 terminal | N/A | N/A | **1007003BCH** |
| 20 | 13 terminal | Solid top and bottom | Solid top | **1007003CCH** |
| 20 | 13 terminal | OH/UG | 3-5/16 hub cover plate | **USTL131C207CH** |
| 20 | 13 terminal | OH/UG | Hub opening | **USTS131BCH** |
| 20 | 13 terminal | OH/UG | 1-1/4-inch bolt-on hub | **USTS131L143CH** |
| 20 | 13 terminal | N/A | N/A | **USTS132BCH** |
| 20 | 6 terminal | OH/UG | Hub opening | **USTS61B138CH** |
| 20 | 6 terminal | OH/UG | Hub opening | **UST61BCH** |
| 20 | 8 terminal | OH/UG | Hub opening | **USTS82B166CH** |
| 20 | 8 terminal | N/A | Solid top and bottom | **1007361BCH** |
| N/A | N/A | N/A | N/A | **1008539CH** |
| 20 | 13 terminal | OH/UG | 3-5/16 hub cover plate | **UASTS131C226CH** |
| 20 | 13 terminal | OH | 3-5/16 hub cover plate | **1004671CH** |
| 20 | 7 terminal | OH | 3-5/16 hub cover plate | **ULTS131CCH** |
| 20 | 6 terminal | UG | Solid top | **STL61A433CH** |
| 20 | 13 terminal | UG | Solid top | **STL131A120CH** |

## Dimensions

Approximate Dimensions in Inches (mm)

### Instrument Rated Sockets

| Catalog Number | Height | Width | Depth |
|---|---|---|---|
| **USTH131A123CH** | 20.00 (304.8) | 12.00 (304.8) | 4.36 (110.7) |
| **USTS131B102CH** | 20.00 (304.8) | 12.00 (304.8) | 4.36 (110.7) |
| **USTS132B101CH** | 20.00 (304.8) | 12.00 (304.8) | 4.36 (110.7) |
| **USTS132CCH** | 20.00 (304.8) | 12.00 (304.8) | 4.36 (110.7) |
| **1008694ACH** | 20.00 (304.8) | 12.00 (304.8) | 4.36 (110.7) |
| **1008695ACH** | 20.00 (304.8) | 12.00 (304.8) | 4.36 (110.7) |
| **1007003BCH** | N/A | N/A | N/A |
| **1007003CCH** | 16.50 (419.1) | 14.00 (355.6) | 3.50 (88.9) |
| **USTL131207CH** | 20.00 (304.8) | 12.00 (304.8) | 4.35 (110.5) |
| **USTS131BCH** | 20.00 (304.8) | 12.00 (304.8) | 4.35 (110.5) |
| **USTS131L143CH** | 20.00 (304.8) | 12.00 (304.8) | 4.35 (110.5) |
| **USTS132BCH** | N/A | N/A | N/A |
| **USTS61B138CH** | 20.00 (304.8) | 12.00 (304.8) | 4.35 (110.5) |
| **UST61BCH** | 20.00 (304.8) | 12.00 (304.8) | 4.35 (110.5) |
| **USTS82B166CH** | 20.00 (304.8) | 12.00 (304.8) | 4.35 (110.5) |
| **1007361BCH** | 16.50 (419.1) | 14.00 (355.6) | 3.50 (88.9) |
| **1008539CH** | N/A | N/A | N/A |
| **UASTS131C226CH** | 20.00 (304.8) | 12.00 (304.8) | 4.35 (110.5) |
| **1004671CH** | 17.00 (431.8) | 10.00 (254.0) | 5.00 (127.0) |
| **ULTS131CCH** | 22.00 (558.8) | 12.00 (304.8) | 4.94 (125.5) |

Residential Pedestals

## Contents

| *Description* | *Page* |
|---|---|
| Product Selection | **V1-T4-28** |
| Dimensions | **V1-T4-28** |



## Product Description

- Available in 100 A, 200 A, 300 A and 320 A designs
- Available in 4- or 5-jaw configurations
- Underground service design is standard
- Bypass options (lever, horn) are available
- Solid top designs

## Product Selection

UHTRP242363CH

### Residential Pedestals

| Ampere Rating | Jaws | Service | Bypass | Connections Line | Load | Opening, Hub or Closure Plate | Catalog Number |
|---|---|---|---|---|---|---|---|
| 320 | 4 | UG | — | 3/8-inch studs | 3/8-inch studs | Solid top | **1008847CH** |
| 320 | 4 | UG | Lever | #6–350 kcmil line and line neutral | 2/0–250 kcmil load and load neutral | Solid top | **1009017CH** ① |
| 300 | 4 | UG | Lever | #6–350 kcmil line and line neutral | 2/0–250 kcmil load and load neutral | Solid top | |
| 200 | 4 | UG | Horn | 4/0 compression (line) 2/0 compression (neutral) | #6–250 kcmil load and load neutral | Solid top | **1006388CH** |
| 200 | 4 | UG | Horn | #8–350 kcmil | #8–350 kcmil | Solid top | **UHTRP242363CH** |
| 200 | 4 | UG | Horn | #6–350 kcmil line and line neutral | #6–250 kcmil load neutral | Solid top | **1008846CH** |
| 200 | 4 | UG | Horn | #6–350 kcmil line and line neutral | #6–250 kcmil load neutral | N/A | **1008961CH** |
| 200 | 5 | N/A | N/A | N/A | N/A | N/A | **1008966CH** |
| 200 | 4 | UG | — | #6–350 kcmil line and line neutral | #6–350 kcmil load and load neutral | Solid top | **1009264CH** |
| 200 | 4 | UG | — | 4/0 compression (line) 2/0 compression (neutral) | #6–350 kcmil load and load neutral | Solid top | **1009265CH** |
| 100 | 4 | UG | — | #6–350 kcmil line and line neutral | #6–250 kcmil load neutral | Solid top | **1009078CH** |

### Pedestal Extension Kits

| Connections Line | Load | Catalog Number |
|---|---|---|
| Pedestal extension kit for 1008846CH | Pedestal extension kit for 1008846CH | **1009021CH** |
| | | **1009022CH** |
| | | **1009026CH** |

## Dimensions

Approximate Dimensions in Inches (mm)

### Residential Pedestals

| Catalog Number | Height | Width | Depth |
|---|---|---|---|
| **1008847CH** | 58.00 (1473.2) | 12.97 (329.4) | 4.93 (125.2) |
| **1009017CH** ① | 63.00 (1600.2) | 12.96 (329.2) | 4.93 (125.2) |
| **1006388CH** | 61.00 (1549.4) | 8.96 (227.6) | 4.93 (125.2) |
| **UHTRP242363CH** | 62.63 (1590.8) | 8.97 (227.8) | 4.94 (125.5) |
| **1008846CH** | 70.00 (1778.0) | 11.00 (279.4) | 6.00 (152.4) |
| **1008961CH** | 69.93 (1776.2) | N/A | 6.00 (152.4) |
| **1008966CH** | N/A | N/A | N/A |
| **1009264CH** | 74.00 (1879.6) | 8.96 (227.6) | 4.93 (125.2) |
| **1009265CH** | 74.00 (1879.6) | 8.97 (227.8) | 4.94 (125.5) |
| **1009078CH** | 69.93 (1776.2) | 11.00 (279.4) | 6.00 (152.4) |

### Pedestal Extension Kits

| Catalog Number | Height | Width | Depth |
|---|---|---|---|
| **1009021CH** | 18.00 (457.2) | 11.00 (279.4) | 6.00 (152.4) |
| **1009022CH** | 18.00 (457.2) | 12.96 (329.2) | 4.93 (125.2) |
| **1009026CH** | 30.00 (762.0) | 12.96 (329.2) | 4.93 (125.2) |

***Note***

① 200 A breakers.

## Product Description

This section will help you better understand the features and benefits of the 125 A and 200 A Eaton designed meter socket.

## Features and Benefits

***Construction Features***

1. High strength, glass-filled meter block assembly, lay-in connectors with captive slide nut and screw.

2. 100% plated copper alloy meter jaw with reinforcing spring clip and meter guide.

3. Extruded neutral lug with integral triplex ground and quadplex ground provision.

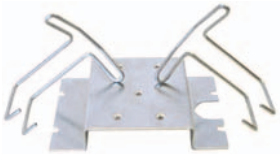

4. Bridge and meter supports are 100% zinc chromate plated.

**200 A Ringless Block Assembly With Horn Bypass**

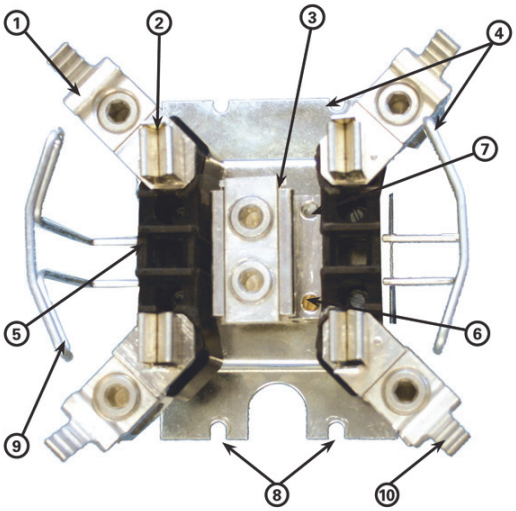


5. Fifth terminal locating hole in 9 o'clock position.
6. Triplex ground is a standard feature.
7. Quadplex ground provision.
8. Durable "four-point" bridge mounting (2 top, 2 bottom).
9. Extra rigid meter support for ringless sockets.
10. Optional, integral horn bypass extruded on slide nut. Horn is ribbed for secure attachment to utility bypass jumpers. Field-installable horn bypass kit available.

## Product Selection

### Meter Socket Accessories

| Description | Part Number |
|---|---|
| **Hub Closure Plates** | |
| Hub closure plate meter socket accessories | **ARP00002CHB** |
| Clam shell hub closure plate meter socket accessories | **ARP00002CHBCS** |
| 1-inch hub closure plate meter socket accessories | **ARP00003CH1** |
| Clam shell 1-inch hub closure plate—small opening | **ARP00003CH1CS** |
| 1-1/4-inch hub closure plate meter socket accessories | **ARP00004CH12** |
| Clam shell 1-1/4-inch hub closure plate—small opening | **ARP00004CH12CS** |
| 1-1/2-inch hub closure plate meter socket accessories | **ARP00005CH15** |
| Clam shell 1-1/2-inch hub closure plate—small opening | **ARP00005CH15CS** |
| 2-inch hub closure plate meter socket accessories | **ARP00006CH2** |
| Aluminum hub closure plate for single sockets | **ARP00008CH** |
| Large hub cover plate | **ARP00016CHB** |
| **Hubs** | |
| 2-inch hub with large diameter opening | **ARP00017CH2** |
| 2-1/2-inch hub for meter socket accessories | **ARP00007CH25** |
| Clam shell 2-1/2-inch hub for meter socket accessories | **ARP00007CH25CS** |
| 2.5-inch hub with large diameter opening | **ARP00018CH25** |
| 3-inch hub | **ARP00019CH3** |
| 3-1/2-inch hub for meter sockets | **ARP00020CH35** |
| 4-inch hub | **ARP00021CH4** |
| Hub adapter from large opening to small opening | **ARP00015CHAP** |
| **Lug Kits** | |
| (2) #6–250 kcmil, double barrel lug for 4, 5 and 7 terminal 3/8-inch stud sockets | **ARP00118CH** |
| #4–600 or (2) 1/0–250 kcmil, single barrel lug for 4, 5 and 7 terminal 3/8-inch stud sockets | **ARP00429CH** |
| #6–350 kcmil, single barrel lug for 4, 5 and 7 terminal 3/8-inch stud sockets | **ARP00119CH** |
| #4–600 kcmil, single barrel lug for 4, 5 and 7 terminal 3/8-inch stud sockets | **ARP00129CH** |
| (2) #6–350 kcmil, double barrel lug for 4 terminal 3/8-inch stud sockets | **ARP00427CH** |
| **Miscellaneous** | |
| Screw sealing ring for single meter sockets | **ARP00027CH** |
| Fifth jaw kit | **ARP00035CHJ** |
| Fifth jaw for bolt on meter | **ARP00326CH** |
| Neutral insulating kit for lever bypass sockets only | **ARP00759CH** |
| 100 A meter socket horn cap assembly kit | **ARP00777CH** |
| Fifth jaw kit for 320 A offset socket | **ARP00862CH** |
| HQ anti-inversion clip for single meter sockets | **ARP00984CH** |
| Fifth jaw for Chicago and Wisconsin pedestal | **ARP01085CH** |
| 350 kcmil BNS cap assembly kit for meter sockets | **ARP01226CH** |
| Right hand block assembly with Z Bar | **ARP01258CH** |
| Left hand block assembly with Z Bar | **ARP01414CH** |
| Meter pack trough closure plate kit | **ARP01565CH** |
| 2/0 connector kit for MBB and MBP socket breaker | **ARP01612CH** |

## Cross-Reference

### Meter Sockets

| Description | Manufacturer<br>Eaton<br>Part Number | Milbank<br>Part Number |
|---|---|---|
| 125 A, OH/UG, ringless, triplex ground, hub opening | **UTRS101BE** | **U7487-RL-TG** |
| 125 A, OH/UG, ringless, triplex ground, hub cover plate | **UTRS101CE** | **U7487-XL-TG** |
| 125 A, OH/UG, ringless, triplex ground, hub opening, horn bypass | **UHTRS101BE** | **U7487-RL-TG-KK** |
| 125 A, OH/UG, ringless, triplex ground, hub cover plate, horn bypass | **UHTRS101CE** | **U7487-XL-TG-KK** |
| 125 A, OH/UG, ringless, triplex ground, hub opening, fifth terminal | **UTRS101BCH + MSR5TK** | **U7487-RL-TG-5T** |
| 125 A, OH/UG, ringless, triplex ground, hub cover plate, fifth terminal | **UTRS101CE + MSR5TK** | **U7487-XL-TG-5T** |
| 125 A, OH/UG, ringless, triplex ground, hub opening, horn bypass, fifth terminal | **UHTRS101BCH + MSR5TK** | **U7487-RL-TG-KK-5T** |
| 125 A, OH/UG, ringless, triplex ground, hub cover plate, horn bypass, fifth terminal | **UGHTRS101CE + MSR5TK** | **U7487-XL-TG-KK-5T** |
| 200 A, OH, ringless, triplex ground, hub opening | **UTRS202BCH** | **U7021-RL-TG** |
| 200 A, OH, ringless, triplex ground, hub cover plate | **UTRS202CCH** | **U7021-XL-TG** |
| 200 A, OH, ringless, triplex ground, hub opening, horn bypass | **UHTRS202BCH** | **U7021-RL-TG-KK** |
| 200 A, OH, ringless, triplex ground, hub cover plate, horn bypass | **UHTRS202CCH** | **U7021-RL-TG-KK** |
| 200 A, OH, ringless, triplex ground, hub opening, fifth terminal | **UGTRS202BCH** | **U7021-RL-TG-5T** |
| 200 A, OH, ringless, triplex ground, hub cover plate, fifth terminal | **UGTRS202CCH** | **U7021-XL-TG-5T** |
| 200 A, OH, ringless, triplex ground, hub opening, horn bypass, fifth terminal | **UGHTRS202BCH** | **U7021-RL-TG-KK-5T** |
| 200 A, OH, ringless, triplex ground, hub cover plate, horn bypass, fifth terminal | **UGHTRS202CCH** | **U7021-RL-TG-KK-5T** |
| 200 A, OH/UG, ringless, triplex ground, hub opening, 250 kcmil lugs | **UTRS212BCH** | **No cross (no 250 kcmil lugs)** |
| 200 A, OH/UG, ringless, triplex ground, hub cover plate, 250 kcmil lugs | **UTRS212CCH** | **No cross (no 250 kcmil lugs)** |
| 200 A, OH/UG, ringless, triplex ground, hub opening, horn bypass, 250 kcmil lugs | **UHTRS212BCH** | **No cross (no 250 kcmil lugs)** |
| 200 A, OH/UG, ringless, triplex ground, hub cover plate, horn bypass, 250 kcmil lugs | **UHTRS212CCH** | **No cross (no 250 kcmil lugs)** |
| 200 A, OH/UG, ringless, triplex ground, hub opening, fifth terminal, 250 kcmil lugs | **UGTRS212BCH** | **No cross (no 250 kcmil lugs)** |
| 200 A, OH/UG, ringless, triplex ground, hub cover plate, fifth terminal, 250 kcmil lugs | **UGTRS212CCH** | **No cross (no 250 kcmil lugs)** |
| 200 A, OH/ UG, ringless, triplex ground, hub opening, horn bypass, fifth terminal, 250 kcmil lugs | **UGHTRS212BCH** | **No cross (no 250 kcmil lugs)** |
| 200 A, OH/UG, ringless, triplex ground, hub cover plate, horn bypass, fifth terminal, 250 kcmil lugs | **UGHTRS212CCH** | **No cross (no 250 kcmil lugs)** |
| 200 A, OH/UG, ringless, triplex ground, hub opening, 350 kcmil lugs | **UTRS213BE** | **U7040-RL-TG** |
| 200 A, OH/UG, ringless, triplex ground, hub cover plate, 350 kcmil lugs | **UTRS213CE** | **U7040-XL-TG** |
| 200 A, OH/UG, ringless, triplex ground, hub opening, horn bypass, 350 kcmil lugs | **UHTRS213BE** | **U7040-RL-TG-KK** |
| 200 A, OH/UG, ringless, triplex ground, hub cover plate, horn bypass, 350 kcmil lugs | **UHTRS213CE** | **U7040-XL-TG-KK** |
| 200 A, OH/UG, ringless, triplex ground, hub opening, fifth terminal, 350 kcmil lugs | **UGTRS213BE** | **U7040-RL-TG-5T** |
| 200 A, OH/UG, ringless, triplex ground, hub cover plate, fifth terminal, 350 kcmil lugs | **UGTRS213CE** | **U7040-XL-TG-5T** |
| 200 A, OH/ UG, ringless, triplex ground, hub opening, horn bypass, fifth terminal, 350 kcmil lugs | **UGHTRS213BE** | **U7040-RL-TG-KK-5T** |
| 200 A, OH/UG, ringless, triplex ground, hub cover plate, horn bypass, fifth terminal, 350 kcmil lugs | **UGHTRS213CE** | **U7040-XL-TG-KK-5T** |
| 200 A, UG, ringless, triplex ground, solid top | **UTRS223ACH** | **U1980-0-TG** |
| 200 A, UG, ringless, triplex ground, solid top, horn bypass | **UHTRS223ACH** | **U1980-0-TG-KK** |
| 200 A, UG, ringless, triplex ground, solid top, fifth terminal | **UGTRS223ACH** | **U1980-O-TG-5T** |
| 200 A, UG, ringless, triplex ground, solid top, horn bypass, fifth terminal | **UGHTRS223ACH** | **U1980-O-TG-KK-5T** |

## Lever Bypass

| Description | Manufacturer Eaton Part Number | Milbank Part Number |
|---|---|---|
| 200 A, OH, lever bypass, 4 terminal, small hub opening | UTE4203BCH | U9800-RL |
| 200 A, OH, lever bypass, 4 terminal, hub cover plate | UTH4203CCH | U9800-XL |
| 200 A, OH, lever bypass, 4 terminal, large hub opening | UTH4203TCH | U9800-R |
| 200 A, OH, lever bypass, 4 terminal, large hub cover plate | UTH4203UCH | U9800-X |
| 200 A, OH, lever bypass, 5 terminal, small hub opening | UTE5203BCH | U4550-RL |
| 200 A, OH, lever bypass, 5 terminal, hub cover plate | UTH5203CCH | U4550-XL |
| 200 A, OH, lever bypass, 5 terminal, large hub opening | UTH5203TCH | U9559-R |
| 200 A, OH, lever bypass, 5 terminal, large hub cover plate | UTH5203UCH | U9550-X |
| 200 A, OH, lever bypass, 7 terminal, small hub opening | UTE7203BCH | U4701-RL |
| 200 A, OH, lever bypass, 7 terminal, hub cover plate | UTH7203CCH | U4701-XL |
| 200 A, OH, lever bypass, 7 terminal, large hub opening | UTE7203TCH | U4701-R |
| 200 A, OH, lever bypass, 7 terminal, large hub cover plate | UTH7203UCH | U4701-X |
| 200 A, OH/UG, lever bypass, 4 terminal, small hub opening | UTE4213BCH | U9801-RL |
| 200 A, OH/UG, lever bypass, 4 terminal, hub cover plate | UTE4213CCH | U9801-XL |
| 200 A, OH/UG, lever bypass, 4 terminal, large hub opening | UTE4213TCH | U9801-R |
| 200 A, OH/UG, lever bypass, 4 terminal, large hub cover plate | UTH4213UCH | U9801-XL |
| 200 A, OH/UG, lever bypass, 4 terminal, large hub opening with adapter plate | UTE4213ZCH | U9801-RRL |
| 200 A, OH/UG, lever bypass, 4 terminal, large hub opening with adapter and cover plate | UTH4213YCH | U9801-RXL |
| 200 A, OH/UG, lever bypass, 5 terminal, small hub opening | UTE5213BCH | U4551-RL |
| 200 A, OH/UG, lever bypass, 5 terminal, hub cover plate | UTE5213CCH | U4551-XL |
| 200 A, OH/UG, lever bypass, 5 terminal, large hub opening | UTE5213TCH | U9551-R |
| 200 A, OH/UG, lever bypass, 5 terminal, large hub cover plate | UTH5213UCH | U9551-X |
| 200 A, OH/UG, lever bypass, 5 terminal, large hub opening with adapter plate | UTE5213ZCH | U9551-RRL or U4551-RRL |
| 200 A, OH/UG, lever bypass, 5 terminal, large hub opening with adapter and cover plate | UTH5213YCH | U9551-RXL or U4551-RXL |
| 200 A, OH/UG, lever bypass, 7 terminal, small hub opening | UTE7213BCH | U9701-RL or U4701-RL |
| 200 A, OH/UG, lever bypass, 7 terminal, hub cover plate | UTE7213CCH | U9701-XL or U4701-XL |
| 200 A, OH/UG, lever bypass, 7 terminal, large hub opening | UTE7213TCH | U9701-R or U4701-R |
| 200 A, OH/UG, lever bypass, 7 terminal, large hub cover plate | UTE7213UCH | U9701-RX or U4701-RX |
| 200 A, OH/UG, lever bypass, 7 terminal, large hub opening with adapter plate | UTE7213ZCH | U9701-RRL or U4701-RRL |
| 200 A, OH/UG, lever bypass, 7 terminal, large hub opening with adapter and cover plate | UTH7213YCH | U9701-RXL or U4701-RXL |
| 320 A, OH, lever bypass, 4 terminal, large hub opening | UTH4300TCH | U1079-R or U1797-R |
| 320 A, OH, lever bypass, 4 terminal, large hub cover plate | UTH4300UCH | U1079-X or U1797X |
| 320 A, OH/UG, lever bypass, 4 terminal, large hub opening | UTH4330TCH | U2448-R or U2124-R |
| 320 A, OH/UG, lever bypass, 4 terminal, large hub cover plate | UTH4330UCH | U2448-RX or U2124-RX |
| 320 A, OH, lever bypass, 7 terminal, large hub opening | UTH7300TCH | — |
| 320 A, OH, lever bypass, 7 terminal, large hub cover plate | UTH7300UCH | — |
| 320 A, OH/UG, lever bypass, 7 terminal, large hub opening | UTH7330TCH | U2120-R |
| 320 A, OH/UG, lever bypass, 7 terminal, large hub cover plate | UTH7330UCH | U2120-X |

## Accessories

| Description | Manufacturer<br>Eaton<br>Part Number | Milbank<br>Part Number |
|---|---|---|
| Small hub cover plate | **ARP00002CHB** | **A7551** |
| 1-inch hub | **ARP00003CH1** | **A7514** |
| 1-1/4-inch hub | **ARP00004CH12** | **A7515** |
| 1-1/2-inch hub | **ARP00005CH15** | **A7516** |
| 2-inch hub | **ARP00006CH2** | **A7517** |
| 2-1/2-inch hub | **ARP00007CH25** | **A7518** |
| 3-inch hub | **ARP00019CH3** | **A8110** |
| 3-1/2-inch hub | **ARP00020CH35** | **A8111** |
| 4-inch hub | **ARP00021CH4** | **A8112** |
| Large to small hub opening adapter plate | **ARP00015CHAP** | **S8324** |
| Large hub cover plate | **ARP00016CHB** | **S9064** |

**Mechanical Lugs**

## Contents

***Description***

Mechanical Lugs

## Product Description

- Single lug
- Extended tang single lug
- Extended tang triple lug
- Double lug
- Extended tang double lug
- Extended tang quadruple lug

## Product Selection

### Mechanical Lugs

| Description | Style Number |
|---|---|
| Single #14–#6 mechanical lug | **ESL146** |
| Single #14–2/0 mechanical lug | **ESL1420** |
| Single #6–250 kcmil mechanical lug | **ESL6250** |
| Single #4–500 kcmil mechanical lug | **ESL4500** |
| Double #14–2/0 mechanical lug | **EDL1420** |
| Double #6–250 kcmil mechanical lug | **EDL6250** |
| Extended tang single lug #6–350 kcmil | **EPBSL6350** |
| Extended tang single lug 300–800 kcmil | **EPBSL300800** |
| Extended tang double lug #6–350 kcmil | **EPBDL6350** |
| Extended tang double lug 300–800 kcmil | **EPBDL300800** |
| Extended tang triple lug #6–350 kcmil | **EPBTL6350** |
| Extended tang triple lug 300–800 kcmil | **EPBTL300800** |
| Extended tang quadruple lug #6–350 kcmil | **EPBQL6350** |
| Extended tang quadruple lug 300–750 kcmil | **EPBQL300800** |
| Extended tang single lug #2–600 kcmil | **EPBSL2600** |
| Extended tang single lug 500–1000 kcmil | **EPBSL5001000** |
| Extended tang triple lug #2–600 kcmil | **EPBTL2600** |

## Dimensions

Approximate Dimensions in Inches (mm)

### Mechanical Lugs

| Style Number | Height | Width | Length |
|---|---|---|---|
| **ESL146** | 2.50 (63.5) | 8.25 (82.6) | 3.50 (88.9) |
| **ESL1420** | 2.50 (63.5) | 10.50 (266.7) | 3.50 (88.9) |
| **ESL6250** | 2.50 (63.5) | 10.50 (266.7) | 3.50 (88.9) |
| **ESL4500** | 2.50 (63.5) | 10.50 (266.7) | 3.50 (88.9) |
| **EDL1420** | 3.50 (88.9) | 4.00 (101.6) | 3.50 (88.9) |
| **EDL6250** | 3.50 (88.9) | 3.75 (95.3) | 4.50 (114.3) |
| **EPBSL6350** | 2.50 (63.5) | 8.25 (82.6) | 3.50 (88.9) |
| **EPBSL300800** | 2.50 (63.5) | 10.50 (266.7) | 3.50 (88.9) |
| **EPBDL6350** | 3.50 (88.9) | 4.50 (114.3) | 5.50 (139.7) |
| **EPBDL300800** | 3.00 (76.2) | 10.50 (266.7) | 5.50 (139.7) |
| **EPBTL6350** | 3.50 (88.9) | 4.50 (114.3) | 5.50 (139.7) |
| **EPBTL300800** | 2.50 (63.5) | 10.00 (254.0) | 5.75 (146.0) |
| **EPBQL6350** | 2.25 (57.2) | 6.50 (165.1) | 6.00 (152.4) |
| **EPBQL300800** | 4.25 (108.0) | 8.50 (215.9) | 8.50 (215.9) |
| **EPBSL2600** | 2.50 (63.5) | 8.25 (82.6) | 3.50 (88.9) |
| **EPBSL5001000** | 2.50 (63.5) | 10.50 (266.7) | 3.50 (88.9) |
| **EPBTL2600** | 2.25 (57.2) | 6.50 (165.1) | 6.00 (152.4) |

**Communication Grounding Device**

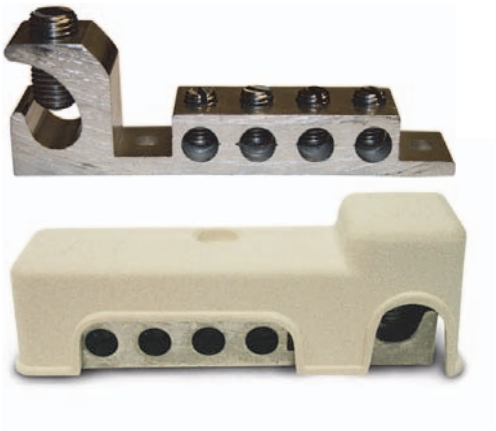

## Contents


| *Description* | *Page* |
|---|---|
| Wiring Diagram | **V1-T4-36** |
| Dimensions | **V1-T4-36** |




## Product Description

This product is required per the 2008 NEC Article 250.94 "Bonding for Other Systems."

This product is applied externally to residential homes, so that communications systems devices such as satellite, TV, cable and CATV can be properly bonded at a single point. This device has two mounting holes that can be used for easy installation.

## Features, Benefits and Functions

***Communication Grounding Device Features***

- Lay-in lug for ease of installation
- Four bonding terminals
- Heavy-duty zinc-plated steel screws included
- Two mounting holes to securely hold device into place
- For use with copper and aluminum conductors

***Cover Features***

- Outdoor rated reinforced glass polyester compound
- Suitable for UV exposure
- Paintable exterior, allowing for matching of exterior of home

## Standards and Certifications

- ETL listed

## Product Selection

### Communication Grounding Device

| Wire Range Bonding Conductor | Wire Range Ground Electrode | Quantity | Catalog Number |
|---|---|---|---|
| #14–#2–STR–SOL–CU<br>#12–#2–SRT–SOL–AL | #8–1/0–STR–SOL–CU/AL | (1) Clamshell | **MSEGR2CS** |
| #14–#2–STR–SOL–CU<br>#12–#2–SRT–SOL–AL | #8–1/0–STR–SOL–CU/AL | (10) Bulk pack | **MSEGR2** |

## Wiring Diagram

### Installation and Configuration

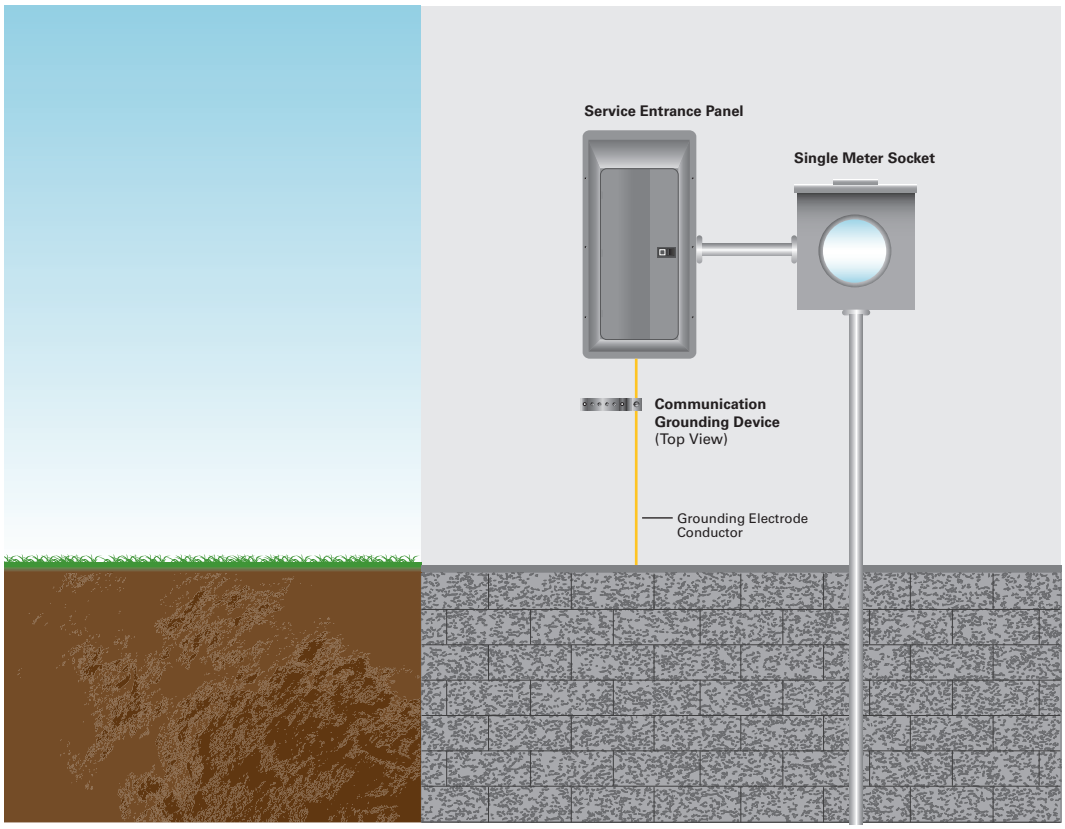


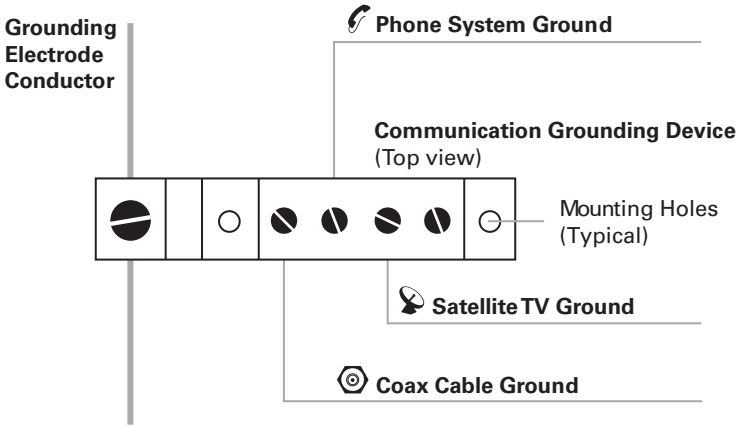


## Dimensions

Approximate Dimensions in Inches (mm)

### Communication Grounding Device

| Catalog Number | Length | Width | Height |
|---|---|---|---|
| MSEGR2CS | 0.75 (19.1) | 3.90 (99.1) | 1.20 (30.5) |
| MSEGR2 | 0.75 (19.1) | 3.90 (99.1) | 1.20 (30.5) |

Residential Meter Breakers

## Contents


| *Description* | *Page* |
|---|---|
| Residential Meter Breakers | |
| Non-EUSERC Combination Service Entrance Devices 100–200 A Styles | **V1-T4-39** |
| Meets EUSERC Requirements Service Entrance Devices 100–225 A. | **V1-T4-48** |
| West Coast All-In-One Design | **V1-T4-59** |
| Mechanical Interlock Cover | **V1-T4-65** |
| House Panels | **V1-T4-75** |
| Commercial Safety Sockets | **V1-T4-83** |
| CH Style Renovation Solutions | **V1-T4-86** |
| Aluminum Meter Breakers | **V1-T4-87** |




## Residential Meter Breakers

### Product Description

A meter breaker is service entrance equipment that consists of a single meter socket and loadcenter (circuit breaker distribution section) or meter socket and main breaker combined in one enclosure. Sometimes called Combos, All-in-Ones, Meter Centers or Meter Mains, these units are increasing in popularity as the socket and loadcenter or main breaker are located in one location, thus providing the contractor with a labor and material savings when installing.

### Application Description

In addition to residential installations, meter breakers are equally applicable for rural service entrance, mobile homes and construction site temporary power. Meter breakers are most often sold in the western, southwestern and southeastern United States. The popularity of meter breakers is continuing to increase as more utilities deregulate and pass the responsibility of supplying watthour meter sockets on to the electrical contractor.

#### *Application Considerations*

Eaton has the meter breaker to meet your application, offering:

- Non-EUSERC
- EUSERC/West Coast
- House panels
- Commercial safety socket

#### Non-EUSERC (Page V1-T4-39)

Eaton's line of non-EUSERC meter breakers are designed for customers served by utilities that are not members of EUSERC.

#### EUSERC/West Coast (Page V1-T4-59)

Eaton's line of EUSERC required devices adhere to the agreed upon standards. EUSERC utilities are predominately located in the western United States, but some eastern and midwestern utilities are also members. These units can also be used in many Non-EUSERC areas.

#### House Panels (Page V1-T4-75)

CH and BR Styles (**Page V1-T4-76**).

Meter breaker device rated at 300–400 A. Applied in EUSERC and non-EUSERC areas.

#### Commercial Safety Sockets (Page V1-T4-83)

Applied in EUSERC and non-EUSERC service areas and used in commercial applications.

### Features, Benefits and Functions

- Both Type BR and CH branch circuit breaker styles available
- Meets latest NEC wire bending space requirements
- Slotted sealing screws at hub with sealing provision provided
- Surface units are supplied with mounting tabs
- Semi-flush units are supplied with stucco flange
- Meter socket ring landing will accept locking security rings
- Overhead or underground service
- Fifth jaw can be installed in the 3 o'clock or 9 o'clock position
- Semi-flush with nail flange or surface mounting
- Meter mounting and underground pull sections are utility sealable
- Units are rated a minimum of 10 kAIC; some units are 22 kAIC
- Numerous units supplied with center keyhole for ease of mounting
- NEMA 3R rainproof construction

### Standards and Certifications

- UL Specification 414 (socket)
- UL File Number E52977
- AEIC-EEI-NEMA Standards (MSJ-7)
- Meet EUSERC utility requirements where noted
- Documented seismic qualified—UBC and CBC Title 24
- UL Specification 67 (panel)

Listed

### Technical Data and Specifications

- Ratings single-phase, three-wire, 120/240 Vac
- 100–225 A main breaker and main lug types
- 10,000 A rms symmetrical short-circuit rating
- Available kAIC ratings: 10 k with BW breaker, 22 k with CSR breaker and 35 k with CSH breaker

Consult TD.31F.01.T.E for dimensions, wiring diagrams and knockouts.

Residential Meter Breakers

*Standard Design Non-EUSERC Panel*

*Compact Design*

## Contents


| *Description* | *Page* |
|---|---|
| Residential Meter Breakers | **V1-T4-37** |
| Non-EUSERC Combination Service Entrance Devices 100–200 A Styles | |
| Meets EUSERC Requirements Service Entrance Devices 100–225 A. | **V1-T4-48** |
| West Coast All-In-One Design | **V1-T4-59** |
| Mechanical Interlock Cover | **V1-T4-65** |
| House Panels | **V1-T4-75** |
| Commercial Safety Sockets | **V1-T4-83** |
| CH Style Renovation Solutions | **V1-T4-86** |
| Aluminum Meter Breakers | **V1-T4-87** |




## Non-EUSERC Combination Service Entrance Devices 100–200 A Styles

### Product Description

A device that may include a meter socket, main breaker and loadcenter section within the same enclosure.

- Meter main = meter socket and main breaker
- Meter breaker = meter socket, main breaker and loadcenter section

### Application Description

Eaton's line of non-EUSERC meter breakers are designed for customers served by utilities that are not members of EUSERC.

### Features, Benefits and Functions

***Meter Mains and All-in-Ones***

- Single-phase, three-wire, 120/240 Vac,10 kAIC
- Larger lay-in lugs and 3-inch (76.2 mm) knockouts for ease of installation
- Box-type main lugs included
- Factory-installed neutral
- Hub provisions on top endwall. If hubs are required, order "DS" style
- Ring, ringless and ringless with horn bypass styles available
- Ringless style, provided with embossed covers and security latch for utility company lock
- Padlockable device covers provide additional measure of safety and help prevent tampering
- NEMA 3R rainproof construction

***Meter Mains***

- Meter socket and main breaker
- Stainless steel latches on meter compartments in MBP types
- No distribution section included

***All-in-Ones***

- Meter socket and loadcenter distribution section
- Stainless steel latches on meter compartments
- Several designs with horn bypass and fifth jaw
- Center-fed main breaker, lugs or provision
- Uses Type BR 1-inch (25.4 mm) wide branch breakers
- Special channel for top exit

## Catalog Number Selection

**MB 20 40 B 200 BT S _**

**Meter Breaker Type**
- **MB** = 1-inch BR Type
- **MBE** = 1-inch BR Type—EUSERC
- **CMB** = 3/4-Inch (19.1 mm) CH Type
- **CMBE** = 3/4-inch (19.1 mm) CH Type—EUSERC

**Spacing**
Number of spaces

**Poles**
Maximum number of poles

**Main**
- **B** = Main breaker included
- **P** = Provision for main
- **L** = Main lug

**Amperes**
Amperage of unit

**Breaker Feed**
- **BT** = Bottom and top
- **B** = Bottom only
- **T** = Top only

**Mounting**
- **S** = Surface
- **F** = Flush/stucco

**Accessories/Modifications**
- **D** = 5th jaw and horn bypass
- **CU** = Copper
- **C** = Single cover compact design
- **CR** = Two cover compact design

## Product Selection

**Note:** See knockout drawings on **Pages V1-T4-68 through V1-T4-74** for hub information.

**Standard Design Non-EUSERC Panel**

**Compact Design**

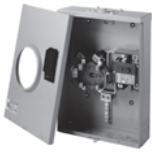

### Combination Service Entrance Devices—Non-EUSERC

| Ampere Rating | Bypass | Service | kAIC | Jaws | Distribution | Main | Branch Breaker Type | Dimensions and Enclosure Shape ① | Page Numbers Wiring | Page Numbers Knockout ① | Catalog Number |
|---|---|---|---|---|---|---|---|---|---|---|---|
| **Ring Style Meter Mains (no distribution section included)** | | | | | | | | | | | |
| 150 | None | OH/UG | 10 | 4 | None | CSR2150 | None | 13 | **V1-T4-46** | **V1-T4-74** | **MBB150BTSCR** |
| 150 | None | OH/UG | 22 | 4 | None | CSR2150 | None | 3 | **V1-T4-43** | **V1-T4-70** | **CMBB150BTS** ⑥⑦ |
| 200 | None | OH/UG | 10 | 4 | None | CSR2200 | None | 13 | **V1-T4-46** | **V1-T4-74** | **MBB200BTSCR** |
| 200 | None | OH/UG | ② | 4 | None | Provision ④⑤ | None | 3 | **V1-T4-43** | **V1-T4-70** | **CMBP200BTS** ⑥⑦ |
| 200 | None | OH/UG | 22 | 4 | None | CSR2200 | None | 3 | — | **V1-T4-70** | **CMBB200BTS** ⑥⑦ |
| **Ringless Meter Mains (no distribution section included)** | | | | | | | | | | | |
| 150 | None | OH/UG | 10 | 4 | None | CSR2150 | None | 13 | **V1-T4-46** | **V1-T4-74** | **MBB150BTSC** ⑦ |
| 200 | None | OH/UG | 10 | 4 | None | CSR2200 | None | 9 | **V1-T4-47** | **V1-T4-74** | **MBB200BTS** ⑧ |
| 200 | None | OH/UG | 10 | 4 | None | CSR2200 | None | 13 | **V1-T4-46** | **V1-T4-74** | **MBB200BTSC** ⑦ |
| 150 | None | OH/UG | 10 | 4 | None | CSR2125 | None | 9 | **V1-T4-47** | **V1-T4-74** | **MBB150BTS** |
| 200 | None | OH/UG | ② | 4 | None | Provision ③ | None | 9 | **V1-T4-47** | **V1-T4-74** | **MBP200BTS** ⑦ |
| 200 | Horn | OH/UG | ② | 5 | None | Provision ③④ | None | 11 | **V1-T4-45** | **V1-T4-74** | **MBP200SD** |
| 200 | Horn | OH/UG | ② | 5 | None | Provision ③④ | None | 9 | **V1-T4-47** | **V1-T4-74** | **MBP200BTSD** |
| 100 | Horn | OH/UG | 10 | 5 | None | Provision | None | 15 | — | **V1-T4-74** | **CHMMB100BTS** |
| 150 | Horn | OH/UG | 10 | 5 | None | CSR2150 | None | 16 | — | **V1-T4-74** | **CHMMB150BTS** |
| 200 | Horn | OH/UG | 10 | 5 | None | CSR2200 | None | 16 | — | **V1-T4-74** | **CHMMB200BTS** |
| 150 | None | OH/UG | 10 | 4 | 4/8 | CSR | BR | — | — | — | **MB48B150TSG** |
| 200 | None | OH/UG | 10 | 4 | 4/8 | CSR | BR | — | — | — | **MB48B200BTSG** |
| 200 | Lever | OH/UG | 22 | 4 | 8/16 | CSR | BR | — | — | — | **MBX816B200BTS** |
| 200 | Lever | OH/UG | 22 | 4 | 20/40 | CSR | BR | — | — | — | **MBX2040B200BTS** |

***Notes***

① See **Page V1-T4-68** for box details.
② Per installed main breaker rating.
③ When a provision for main is provided, order one of the main breakers listed in **Page V1-T4-43**. Panels are dual labeled to accept Types BW, CSR or CSH Main Breakers.
④ MCBK225 lug kit is needed for load side cable connection for Meter Mains. Please order separately.
⑤ When a provision for main is provided, order one of the main breakers listed in this table. Panels are labeled to accept Type CSR Main Breakers.
⑥ Copper bus.
⑦ One-piece cover on utility side, Florida approved.
⑧ Single cover design.
⑨ Xcel approved.

**Note:** See knockout drawings on **Pages V1-T4-68 through V1-T4-74** for hub information.

## Combination Service Entrance Devices—Non-EUSERC, continued

| Ampere Rating | Bypass | Service | kAIC | Jaws | Distribution | Main | Branch Breaker Type | Dimensions and Enclosure Shape ① | Page Numbers Wiring | Page Numbers Knockout ① | Catalog Number |
|---|---|---|---|---|---|---|---|---|---|---|---|
| **Ring Style All-in-Ones (includes distribution section)** | | | | | | | | | | | |
| 125 | None | OH/UG | ② | 4 | 2/4 | None—refer to Distribution CSR2150 | CH | 2 | **V1-T4-43** | **V1-T4-70** | **CMB24L125BTS** ④⑤ |
| 150 | None | OH/UG | 22 | 4 | 8 | | CH | 3 | **V1-T4-44** | **V1-T4-70** | **CMB88B150BTS** ④⑤ |
| 200 | None | OH/UG | 10 | 4 | 4/8 | CSR2200 | BR | 3 | **V1-T4-44** | **V1-T4-70** | **MB48B200BTS** ⑤⑥ |
| 200 | None | OH/UG | 22 | 4 | 8 | CSR2200 | CH | 3 | **V1-T4-44** | **V1-T4-70** | **CMB88B200BTS** ④⑤⑥ |
| 200 | None | UG | 22 | 4 | 32/42 | CSR2200 | CH | 7 | **V1-T4-43** | **V1-T4-69** | **CMB3242B200BS** ④⑤ |
| 200 | None | OH/UG | 22 | — | 42/42 | — | CH | — | — | — | **CMB4242B200BTS** ④ |
| **Ringless All-in-Ones (includes distribution section)** | | | | | | | | | | | |
| 125 | None | OH/UG | 22 | 4 | 4/8 | CSR2125 | BR | 21 | — | **V1-T4-73** | **MBT48B125BTS** |
| 150 | None | OH/UG | 22 | 4 | 4/8 | CSR2150 | BR | 21 | **V1-T4-46** | **V1-T4-73** | **MBT48B150BTS** |
| 150 | Horn | OH/UG | 10 | 5 | 8/16 | BW2150 | BR | 11 | — | — | **MB816B150STD** ⑦ |
| 150 | Horn | OH/UG | 10 | 5 | 20/40 | BW2150 | BR | 11 | **V1-T4-47** | **V1-T4-74** | **MB2040B150SD** ⑦ |
| 200 | None | OH/UG | 10 | 4 | 8/16 | CSR2200 | BR | 10 | **V1-T4-46** | **V1-T4-74** | **MB816B200BTS** ⑤⑥ |
| 200 | None | OH/UG | 10 | 4 | 8/16 | CSR2200 | BR | 10 | **V1-T4-46** | **V1-T4-74** | **MB816B200BTSCU** ④⑤⑥ |
| 200 | Horn | OH/UG | 10 | 5 | 8/16 | BW2200 | BR | 11 | — | — | **MB816B200STD** ⑦ |
| 200 | None | OH/UG | ② | 4 | 8/16 | Provision ③ | BR | 10 | **V1-T4-46** | **V1-T4-74** | **MB816P200BTS** ⑤⑥ |
| 200 | None | OH/UG | ② | 4 | 8/16 | Provision ③ | BR | 10 | **V1-T4-46** | **V1-T4-74** | **MB816P200BTSCU** ④⑤⑥ |
| 200 | Horn | OH/UG | ② | 5 | 8/16 | Provision ③ | BR | 11 | **V1-T4-46** | **V1-T4-74** | **MB816P200STD** ⑥⑦ |
| 200 | Horn | OH/UG | ② | 5 | 8/16 | Provision ③ | BR | 10 | **V1-T4-46** | **V1-T4-74** | **MB816P200BTSD** ⑥ |
| 200 | None | OH/UG | 10 | 4 | 12/12 | CSR2200 | CH | 10 | **V1-T4-44** | **V1-T4-70** | **CMB1212B200BTS** ④⑤⑥ |
| 200 | None | OH/UG | ② | 4 | 6–2 Pole | Main lugs | CH | 9 | **V1-T4-45** | **V1-T4-71** | **CMB1212L200BTS** ④⑥ |
| 200 | None | OH/UG | ② | 4 | 12/12 | Provision ③ | CH | 10 | **V1-T4-45** | **V1-T4-71** | **CMB1212P200BTS** ④⑤⑥ |
| 200 | None | OH/UG | ② | 4 | 6–2 Pole | Main lugs | BR | 9 | **V1-T4-44** | **V1-T4-71** | **MB1212L200BTS** ⑥ |
| 200 | None | OH/UG | 22 | 4 | 24/24 | CSR2200 | CH | 10 | **V1-T4-44** | **V1-T4-74** | **CMB2424B200BTS** ④⑤ |
| 200 | None | OH/UG | 22 | 4 | 24/36 | CSR2200 | CH | 10 | **V1-T4-45** | **V1-T4-74** | **CMB2436B200BTS** ④ |
| 200 | None | OH/UG | 10 | 4 | 20/40 | CSR2200 | BR | 10 | **V1-T4-47** | **V1-T4-74** | **MB2040B200BTS** ④ |
| 200 | None | OH/UG | ② | 4 | 20/40 | Provision ③ | BR | 10 | **V1-T4-47** | **V1-T4-74** | **MB2040P200BTS** ⑤ |
| 200 | Horn | OH/UG | ② | 5 | 20/40 | Provision ③ | BR | 11 | **V1-T4-47** | **V1-T4-74** | **MB2040P200SD** ⑦ |
| 200 | Horn | OH/UG | 10 | 5 | 20/40 | CSR2200 | BR | 10 | **V1-T4-47** | **V1-T4-74** | **MB2040B200SD** ⑦ |
| 200 | Lever | OH/UG | 10 | 5 | None | CSR2200 | None | 14 | **V1-T4-45** | **V1-T4-73** | **CMBXB200BTS** ④ |
| 200 | Lever | OH/UG | 10 | 5 | 12/12 | CSR2200 | CH | 14 | **V1-T4-45** | **V1-T4-73** | **CMBX1212B200BTS** ④⑥ |
| 200 | Lever | OH/UG | 10 | 5 | 32/42 | CSR2200 | CH | 14 | **V1-T4-46** | **V1-T4-73** | **CMBX3242B200BTS** ④ |
| 200 | Lever | OH/UG | 10 | 5 | None | Provision | None | 14 | **V1-T4-45** | **V1-T4-73** | **CMBXP200BTS** ④ |
| 200 | Lever | OH/UG | 10 | 5 | 12/12 | Provision | CH | 14 | **V1-T4-45** | **V1-T4-73** | **CMBX1212P200BTS** ④⑥ |
| 200 | Lever | OH/UG | 10 | 5 | 32/42 | Provision | CH | 14 | **V1-T4-46** | **V1-T4-73** | **CMBX3242P200BTS** ④ |
| 200 | None | OH/UG | ② | 4 | 4/8 | Provision | BR | 21 | **V1-T4-46** | **V1-T4-73** | **MBT48P200BTS** ⑥ |
| 200 | None | OH/UG | 22 | 4 | 4/8 | CSR2200 | BR | 21 | **V1-T4-46** | **V1-T4-73** | **MBT48B200BTS** ⑥ |

***Notes***

① See **Page V1-T4-68** for box details.
② Per installed main breaker rating.
③ When a provision for main is provided, order one of the main breakers listed on **Page V1-T4-43**. All panels are dual labeled to accept Types BW, CSR, CSH Main Breakers.
④ Copper bus.
⑤ One-piece cover on utility side, Florida approved.
⑥ Units come with feed-through lugs.
⑦ Xcel approved.

## Main Breaker Selection Chart

| Maximum Ampere Rating | Two-Pole Breaker Catalog Numbers | | | |
|---|---|---|---|---|
| | 10 kAIC | 25 kAIC | 25 kAIC | 35 kAIC |
| 100 | **BW2100** | **CSR2100** | **CSR2100N** | **CSH2100N** |
| 125 | **BW2125** | **CSR2125** | **CSR2125N** | **CSH2125N** |
| 150 | **BW2150** | **CSR2150** | **CSR2150N** | **CSH2150N** |
| 200 | **BW2200** | **CSR2200** | **CSR2200N** | **CSH2200N** |
| Load Side Lug Kit for BW and CSR Breakers ① | | | **MCBK225** | |

## Wiring Diagrams

### Catalog Number—CMB3242B200BS

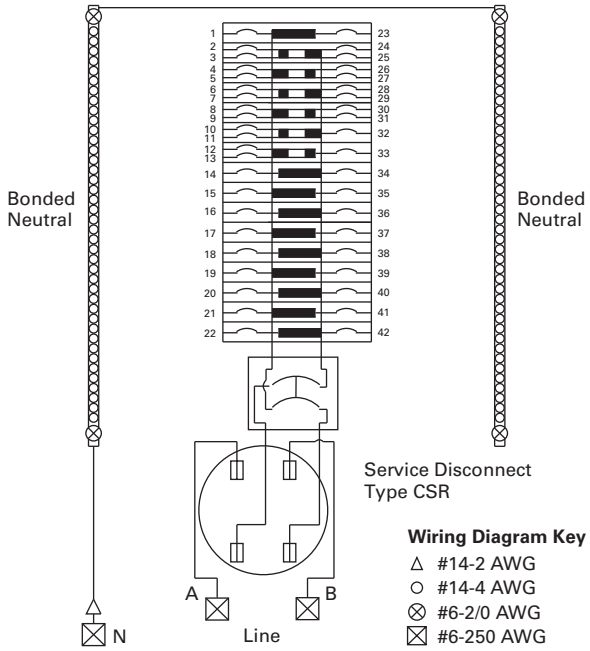


### Catalog Numbers—CMBP200BTS, CMBB150BTS

Install 200 Ampere Maximum Service Disconnect Type CSR ②

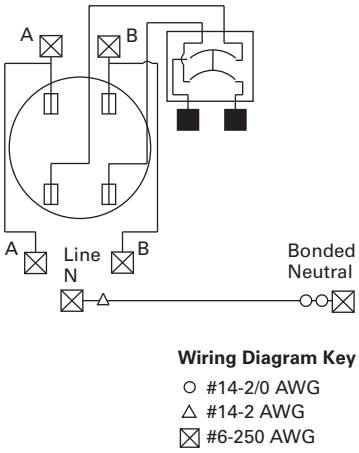


### Catalog Number—CMB24L125BTS

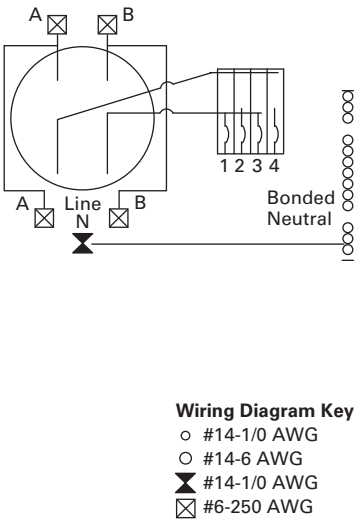


***Notes***

① When a provision for main is provided, order one of the main breakers listed in this table. All panels are dual labeled to accept Types BW, CSR and CSR Main Breakers.

② Factory-installed **MCBK225** Kit for C/B load lugs.

### Catalog Numbers—CMB88B200BTS, CMB88B150BTS

Service Disconnect
Type CSR 200 Ampere Maximum

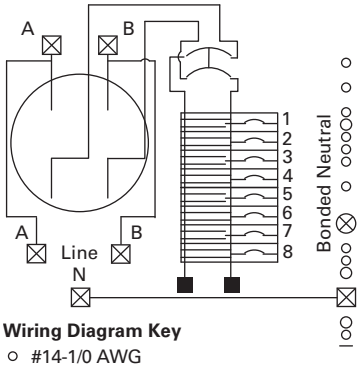


**Wiring Diagram Key**
- ○ #14-1/0 AWG
- ○ #14-6 AWG
- ⊗ #6-2/0 AWG
- ☒ #6-250 AWG
- ■ #4-300 AWG

### Catalog Number—MB1212L200BTS

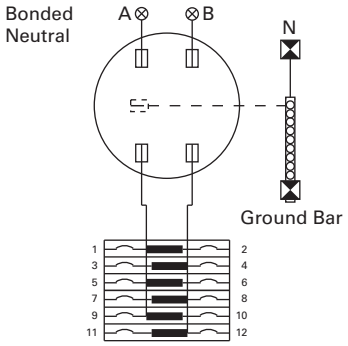


**Wiring Diagram Key**
- ○ #14-2/0 AWG
- ⊗ #6-350 kcmil
- ⧗ #6-300 kcmil

### Catalog Number—MB48B200BTS

200 A Maximum
Service Disconnect
Type BW or CSR

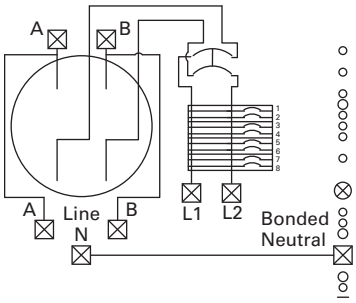


**Wiring Diagram Key**
- ○ #14-1/0 AWG
- ○ #14-6 AWG
- ⊗ #6-2/0 AWG
- ☒ #6-250 AWG

### Catalog Number—CMB2424B200BTS

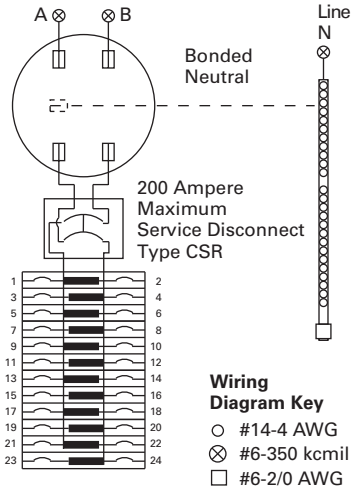


**Wiring Diagram Key**
- ○ #14-4 AWG
- ⊗ #6-350 kcmil
- □ #6-2/0 AWG
- ☒ #4-300 kcmil

### Catalog Number—CMB1212B200BTS

5th Jaw Factory Installed
on CMB1212B200BTSD and
CMB1212P200BTSD Only

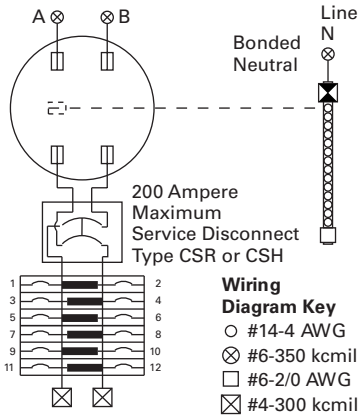


**Wiring Diagram Key**
- ○ #14-4 AWG
- ⊗ #6-350 kcmil
- □ #6-2/0 AWG
- ☒ #4-300 kcmil
- ⧗ #6-300 kcmil

### Catalog Number—CMB1212L200BTS

5th Jaw Factory Installed
on CMB1212L200BTSD Only

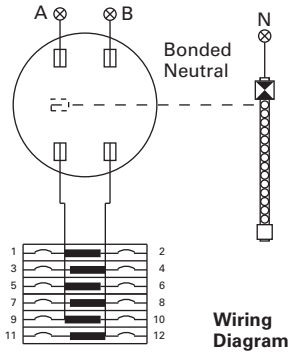


**Wiring Diagram Key**
- ○ #14-4 AWG
- ⊗ #6-350 kcmil
- □ #6-2/0 AWG
- ⧗ #6-300 kcmil

### Catalog Numbers—MBP200SD, CMBXB200BTS, CMBXP200BTS

CMBXB200BTS &
CMBXP200BTS
included lever by
pass meter socket

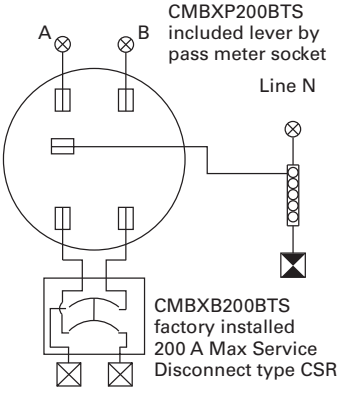


CMBXB200BTS
factory installed
200 A Max Service
Disconnect type CSR

MBP200SD
install 200 A Max
Service Disconnect
Type BW or CSR

Wiring
Diagram Key
- ○ #6-2/0 AWG
- ⊗ #6-350 kcmil
- ⊠ #1-300 kcmil
- ⧗ #6-300 kcmil

### Catalog Number—CMB2436B200BTS

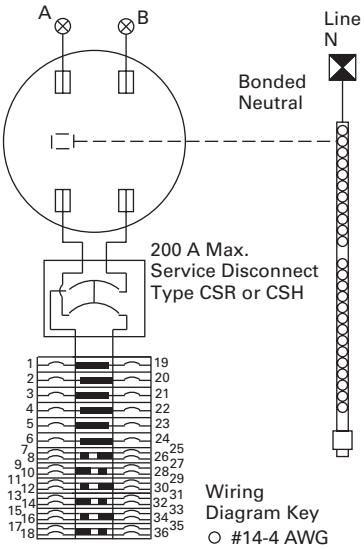


Wiring
Diagram Key
- ○ #14-4 AWG
- ⊗ #6-350 kcmil
- □ #6-2/0 AWG
- ⧗ #4-300 kcmil

Maximum of 12 twin
Breakers as Shown

### Catalog Numbers—CMB1212B150BTS, CMBX1212B200BTS, CMB1212B200BTS, CMB1212P200BTS, CMBX1212P200BTS

5th Jaw Factory Installed
on CMB1212B200BTSD and
CMB1212P200BTSD Only

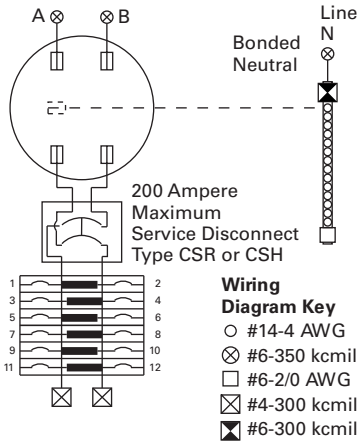


**Wiring Diagram Key**
- ○ #14-4 AWG
- ⊗ #6-350 kcmil
- □ #6-2/0 AWG
- ⊠ #4-300 kcmil
- ⧗ #6-300 kcmil

CMBX1212B200BTS &
CMBX1212P200BTS include
lever bypass meter socket

### Catalog Numbers—MBT48B200BTS, MBT48P200BTS, MBT48B150BTS, MBT48P150BTS

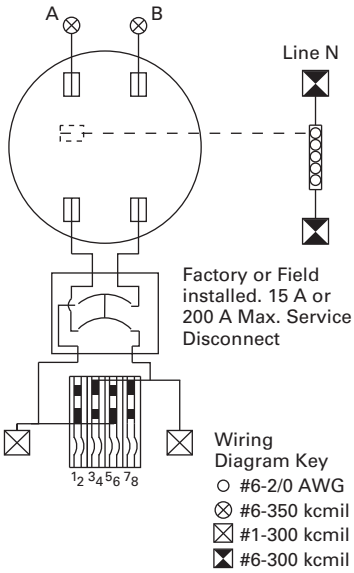


### Catalog Numbers—MBB150BTSC, MBB150BTSCR, MBB200BTSCR and MBB200BTSC

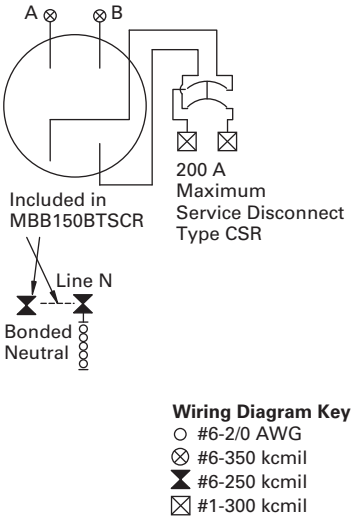


### Catalog Numbers—CMBX3242P200BTS, CMBX3242B200BTS

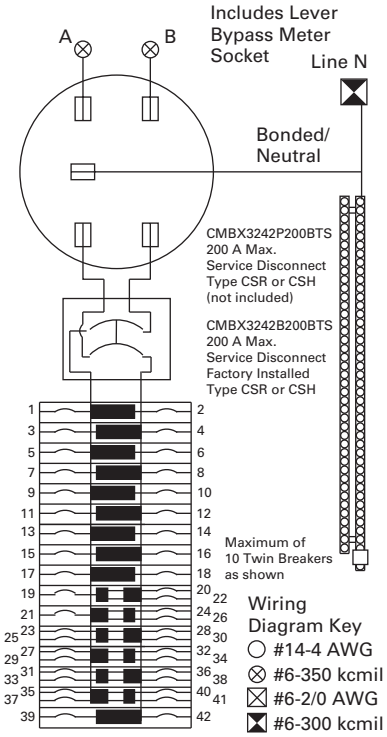


### Catalog Numbers—MB816P200STD, MB816B200BTS, MB816B200BTSCU, MB816P200BTS, MB816P200BTSCU and MB816P200BTSD

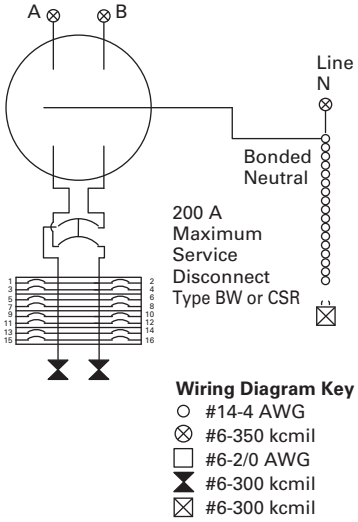

### Catalog Numbers—MBB150BTS, MBP200SD, MBB200BTS, MBP200BTS, MBP200BTSD, CMBXB200BTS and CMBXP200BTS

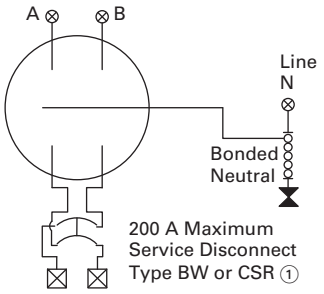


**Wiring Diagram Key**
- ○ #6-2/0 AWG
- ⊗ #6-350 kcmil
- ☒ #1-300 kcmil
- ⧗ #6-300 kcmil

### Catalog Numbers—MB2040P200SD, MB2040B200BTS, MB2040P200BTS, MB2040B150SD and MB2040B200SD

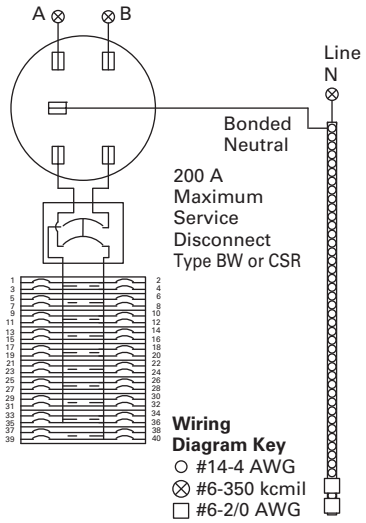

**Residential Meter Breakers**

*Meets EUSERC Requirements Service Entrance Devices 100–225 A*

## Contents


| *Description* | *Page* |
|---|---|
| Residential Meter Breakers | **V1-T4-37** |
| Non-EUSERC Combination Service Entrance Devices 100–200 A Styles | **V1-T4-39** |
| Meets EUSERC Requirements Service Entrance Devices 100–225 A | |
| West Coast All-In-One Design | **V1-T4-59** |
| Mechanical Interlock Cover | **V1-T4-65** |
| House Panels | **V1-T4-75** |
| Commercial Safety Sockets | **V1-T4-83** |
| CH Style Renovation Solutions | **V1-T4-86** |
| Aluminum Meter Breakers | **V1-T4-87** |


## Meets EUSERC Requirements Service Entrance Devices 100–225 A

### Product Description

Eaton is proud to introduce a new line of West Coast/EUSERC Meter Breaker units. The new EUSERC devices complement the existing standard meter breaker devices. Customers who are interested in the complete meter breaker line of products can refer to Technical Data TD.31F.01.T.E.

### Application Description

Eaton's line of EUSERC required devices adhere to the agreed upon standards. EUSERC utilities are predominately located in the western United States, but some eastern and midwestern utilities are also members. **These units can also be used in many Non-EUSERC areas.**

### Features, Benefits and Functions

- Single-phase, three-wire, 120/240 V, 10 kAIC
- Larger 250 kcmil lugs and additional knockouts for ease of installation
- Box type main lugs are included
- Factory-installed neutrals
- Hub provisions on top endwall. If hubs are required, order "DS" type hubs
- Ring type sockets are provided with a sealing ring
- Padlockable device covers provide an additional measure of security and help prevent tampering
- Most units have center keyhole for easy one-person installation
- NEMA 3R rainproof construction

## Catalog Number Selection

**MBE 20 40 B 200 B S ____**

**Meter Breaker Type**

| | |
|---|---|
| **MB** | = 1-inch (25.4 mm) BR Type |
| **MBE** | = 1-inch (25.4 mm) BR Type—EUSERC |
| **CMB** | = 0.75-inch (19.1 mm) CH Type |
| **CMBE** | = 0.75-inch (19.1 mm) CH Type—EUSERC |
| **MBED** | = 7-inch (177.8 mm) deep |
| **MBER** | = 1-inch (25.4 mm) BR Type—EUSERC ranch |
| **CMBER** | = 0.75-inch (19.1 mm) CH Type—EUSERC ranch |
| **MBEB** | = 1-inch (25.4 mm) BR Type back-to-back |
| **MBX** | = Xcel approved lever bypass meter breaker |

**Spacing**

Number of spaces

**Poles**

Maximum number of poles

**Main**

**B** = Main breaker included
**P** = Provision for main
**L** = Main lug

**Amperes**

Amperage of unit

**Breaker Feed**

**BT** = Bottom and top
**B** = Bottom only
**T** = Top only

**Mounting**

**S** = Surface
**F** = Flush/stucco

**Accessories/Modifications**

**D** = 5th jaw and horn bypass
**CU** = Copper
**C** = Single cover compact design
**CR** = Two cover compact design

**Last Digits**

**G** = Suffix = GA PWE spec
**R** ① = Suffix = ECCN renovation
**PV** = Suffix = PV rated units
**6** = 2 x 6 construction
**A** = Aluminum enclosure

***Note***

① Not available in CR.

## Product Selection

**Note:** See knockout drawings on **Pages V1-T4-68 through V1-T4-74** for hub information.

### Combination Service Entrance Devices—EUSERC

| Ampere Rating | By-pass | Service | kAIC | Jaws | Distribution | Main | Branch Breaker Type | Dimensions and Enclosure Shape ① | Page Numbers Wiring | Page Numbers Knockout ① | Catalog Number—Surface | Catalog Number—Flush |
|---|---|---|---|---|---|---|---|---|---|---|---|---|
| **Ring Style Meter Mains (no distribution section included)** | | | | | | | | | | | | |
| 125 | None | OH/UG | ② | 4 | 2/4 | MLO | BR | 2 | **V1-T4-55** | **V1-T4-70** | **MBE24L125BTS** ③ | **MBE24L125BTF** |
| 125 | None | OH/UG | ② | 4 | 2/4 | MLO | CH | 2 | **V1-T4-53** | **V1-T4-70** | **CMBE24L125BTS** ③④ | — |
| 150 | None | OH/UG | 22 | 4 | None | CSR2150N | None | 3 | **V1-T4-52** | **V1-T4-70** | **CMBEB150BTS** ③④ | — |
| 200 | None | OH/UG | 10 | 4 | None | CSR2200 | None | 3 | **V1-T4-56** | **V1-T4-70** | **MBEB200BTS** ③ | **MBEB200BTF** |
| 200 | None | OH/UG | 22 | 4 | None | CSR2200N | None | 3 | **V1-T4-52** | **V1-T4-70** | **CMBEB200BTS** ③④ | — |
| 200 | None | OH/UG | ② | 4 | 2/4 | MLO | BR | 3 | **V1-T4-56** | **V1-T4-70** | **MBE24L200BTS** ③ | **MBE24L200BTF** |
| 200 | None | OH/UG | ② | 4 | 2/4 | MLO | CH | 3 | **V1-T4-53** | **V1-T4-70** | **CMBE24L200BTS** ③④ | — |
| **Ring Style All-in-Ones (includes distribution section)** | | | | | | | | | | | | |
| 100 | None | OH/UG | 10 | 4 | 12/24 | BR2100 | BR | 2 | **V1-T4-53** | **V1-T4-70** | **MBE1224B100BTS** | **MBE1224B100BTF** |
| 100 | None | UG | 10 | 4 | 14/28 | BR2100 | BR | 4 | **V1-T4-55** | **V1-T4-69** | **MBE1428B100BS** ⑤ | **MBE1428B100BF** ⑤ |
| 100 | None | OH | 10 | 4 | 12/24 | BR2100 | BR | 9 | **V1-T4-58** | **V1-T4-71** | **MBE1224B100TS** | — |
| 125 | None | OH/UG | 10 | 4 | 12/24 | BR2125 | BR | 2 | **V1-T4-53** | **V1-T4-70** | **MBE1224B125BTS** | **MBE1224B125BTF** |
| 125 | None | OH | 10 | 4 | 12/24 | BR2125 | BR | 9 | **V1-T4-58** | **V1-T4-71** | **MBE1224B125TS** | — |
| 125 | None | UG | 10 | 4 | 18/36 | BR2125 | BR | 5 | **V1-T4-54** | **V1-T4-69** | — | **MBE1836B125BF** ⑤ |
| 150 | None | OH/UG | 10 | 4 | 4/8 | CSR2150 | BR | 19 | — | — | **MBER48B150BTS** ⑥⑦ | — |
| 150 | None | OH/UG | 22 | 4 | 8/8 | CSR2150N | CH | 19 | — | — | **CMBER88B150BTS** ④⑥⑦ | — |
| 150 | None | OH/UG | 22 | 4 | 8 | CSR2150N | CH | 3 | **V1-T4-53** | **V1-T4-70** | **CMBE88B150BTS** ④⑥ | **CMBE88B150BTF** ④⑥ |
| 150 | None | UG | 22 | 4 | 32/42 | CSR2150N | CH | 7 | **V1-T4-52** | **V1-T4-69** | **CMBE3242B150BS** ④⑤ | — |
| 150 | None | UG | 10 | 4 | 20/40 | CSR2150 | BR | 6 | **V1-T4-54** | **V1-T4-69** | — | **MBE2040B150BF** ⑤⑧ |

***Notes***

① See **Page V1-T4-68** for box details.
② Interrupting rating is dependent on the main breaker that is installed.
③ Reference drawing EUSERC DWG-301, G1.
④ Unit has copper bus.
⑤ Reference drawing EUSERC DWG-301/301A.
⑥ Units come with feed-through lugs.
⑦ Units include a two-pole provision for secondary main 70 A max. Type BR, BRH, BRHH.
⑧ Please use RH-Type hubs on top end wall for overhead feed.

**Note:** See knockout drawings on **Pages V1-T4-68 through V1-T4-74** for hub information.

## Combination Service Entrance Devices—EUSERC, continued

| Ampere Rating | By-pass | Service | kAIC | Jaws | Distribution | Main | Branch Breaker Type | Dimensions and Enclosure Shape ① | Page Numbers Wiring | Page Numbers Knockout ① | Catalog Number—Surface | Catalog Number—Flush |
|---|---|---|---|---|---|---|---|---|---|---|---|---|
| **Ring Style All-in-Ones (includes distribution section), continued** | | | | | | | | | | | | |
| 150 | None | OH/UG | 22 | 4 | 20/40 | CSR2150 | BR | — | **V1-T4-55** | — | **MBE2040B150BTS** ③ | — |
| 150 | None | OH/UG | 10 | 4 | 4/8 | CSR2150 | BR | 3 | **V1-T4-56** | **V1-T4-70** | **MBE48B150BTS** | — |
| 200 | None | OH/UG | 10 | 4 | 4/8 | CSR2200 | BR | 3 | **V1-T4-56** | **V1-T4-70** | **MBE48B200BTS** ④ | **MBE48B200BTF** ④ |
| 200 | None | OH/UG | 22 | 4 | 8 | CSR2200N | CH | 3 | **V1-T4-53** | **V1-T4-70** | **CMBE88B200BTS** ④⑤ | **CMBE88B200BTF** ④⑤ |
| 200 | None | OH/UG | 10 | 4 | 8 | CSR2200 | BR | 3 | **V1-T4-56** | **V1-T4-70** | **MBE88B200BTS** | — |
| 200 | None | OH/UG | 10 | 4 | 4/8 | CSR2200 | BR | 19 | **V1-T4-58** | **V1-T4-73** | **MBER48B200BTS** ④⑥ | — |
| 200 | None | OH/UG | 10 | 4 | 4/8 | CSR2200 | BR | 19 | **V1-T4-58** | **V1-T4-73** | **MBER48B200BTS** ④⑥ | — |
| 200 | None | OH/UG | ② | 4 | 8/16 | Provision | BR | 10 | **V1-T4-57** | **V1-T4-71** | **MBE816P200TSCU** ③⑤ | — |
| 200 | None | OH | ② | 4 | 8/16 | Provision | BR | 10 | **V1-T4-57** | **V1-T4-71** | **MBE816P200TS** ③④ | — |
| 200 | None | UG | ② | 4 | 6–2 Pole | Main Lug | CH | 5 | **V1-T4-52** | **V1-T4-69** | **CMBE1212L200BS** ⑤⑦ | **MBE1212L200BTF** ⑦ |
| 200 | None | OH/UG | ② | 4 | 6–2 Pole | Main Lug | BR | 9 | **V1-T4-57** | **V1-T4-69** | **MBE1212L200BTS** | — |
| 200 | None | OH | 10 | 4 | 20/40 | CSR2200 | BR | 10 | **V1-T4-57** | **V1-T4-71** | **MBE2040B200TS** ③ | **MBE2040B200TF** ⑧ |
| 200 | None | UG | 10 | 4 | 20/40 | CSR2200 | BR | 6 | **V1-T4-54** | **V1-T4-69** | **MBE2040B200BS** ③ | **MBE2040B200BF** ⑧ |
| 200 | None | OH/UG | 22 | 4 | 20/40 | CSR2200 | BR | — | **V1-T4-55** | — | **MBE2040BH200BTS** ③ | — |
| 200 | None | OH/UG | 22 | 4 | 20/40 | CSR2200 | BR | — | **V1-T4-55** | — | **MBE2040BH200BTF** ③ | — |
| 200 | None | UG | 22 | 4 | 30/42 | CSR2200 | BR | 7 | **V1-T4-54** | — | — | **MBE3042B200BF** |
| 200 | None | UG | 22 | 4 | 32/42 | CSR2200N | CH | 7 | **V1-T4-52** | **V1-T4-69** | **CMBE3242B200BS** ⑤⑦ | **CMBE3242B200BF** ⑤⑦ |
| 200 | None | UG | 22 | 4 | 40 | CSR2200 | BR | 12 | **V1-T4-58** | — | **MBE4040B200BSH** ③⑦ | — |
| 200 | None | OH/UG | 22 | 4 | 40 | CSR2200 | BR | 12 | **V1-T4-58** | — | **MBE4040B200BTS** | **MBE4040B200BTF** ⑨ |
| 200 | None | OH/UG | 22 | 4 | 42 | CSR2200N | CH | 12 | **V1-T4-57** | — | **CMBE4242B200BTS** ⑤ | — |
| 200 | None | OH/UG | 10 | 4 | 20/40 | CSR2200 | BR | 18 | **V1-T4-55** | **V1-T4-73** | **MBE2040B200BTS** ③ | **MBE2040B200BTF** ③ |
| 225 | None | OH/UG | 10 | 4 | 20/40 | CSR2225 | BR | 18 | **V1-T4-58** | **V1-T4-73** | **MBE2040B225BTS** ③ | **MBE2040B225BTF** ③ |
| 225 | None | UG | 22 | 4 | 30/42 | CSR2225 | BR | 7 | **V1-T4-55** | — | — | **MBE3042B225BF** ⑦ |
| 225 | None | UG | 22 | 4 | 32/42 | CSR2225N | CH | 7 | **V1-T4-52** | **V1-T4-69** | **CMBE3242B225BS** ⑤⑦ | **CMBE3242B225BF** ⑤⑦ |

***Notes***

① See **Page V1-T4-68** for box details.
② Interrupting rating is dependent on the main breaker that is installed.
③ Please use RH-Type hubs on top end wall for overhead feed.
④ Units come with feed-through lugs.
⑤ Unit has copper bus.
⑥ Semi-flush flange, not full stucco flange.
⑦ Reference drawing EUSERC DWG-301/301A.
⑧ When a provision for main is provided, order one of the main breakers listed on **Page V1-T4-68**. All panels are dual labeled to accept Types BW or CSR Main Breakers.
⑨ Includes factory-mounted 2.50-inch hub on bottom endwall. UG feed only.

## Wiring Diagrams

### Catalog Numbers—CMBE3242B150BS, CMBE3242B200BS, CMBE3242B200BF, CMBE3242B225BS and CMBE3242B225BF

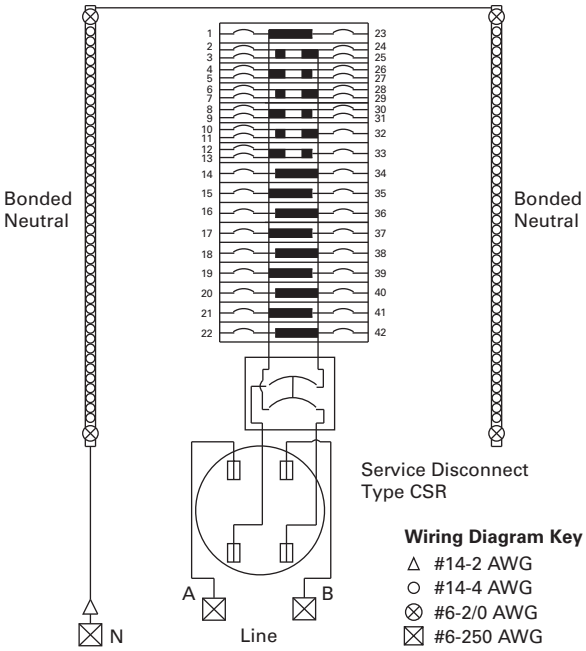


### Catalog Number—CMBE1212L200BS

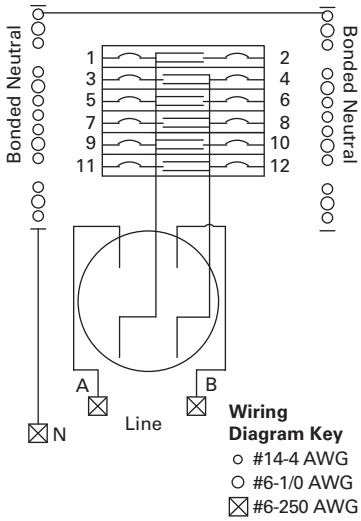


### Catalog Numbers—CMBE2222P125BF and CMBE2222P125BS

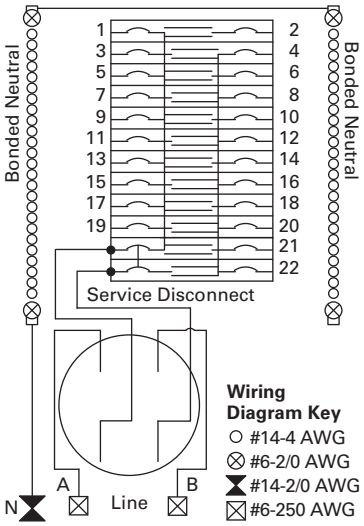


### Catalog Numbers—CMBEB150BTS and CMBEB200BTS

Install 200 Ampere Maximum Service Disconnect Type CSR ②

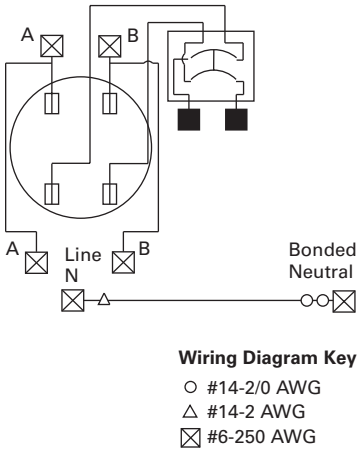


***Note***

① Factory-installed **MCBK225** kit for C/B load lugs.

### Catalog Number—CMBE24L125BTS

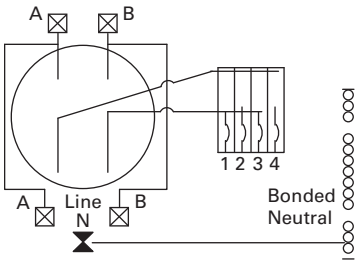


**Wiring Diagram Key**
- ○ #14-1/0 AWG
- ○ #14-6 AWG
- ⧗ #14-1/0 AWG
- ☒ #6-250 AWG

### Catalog Numbers—CMBE88B200BTS, CMBE88B200BTF, CMBE88B150BTS and CMBE88B150BTF

Service Disconnect
Type CSR 200 Ampere Maximum

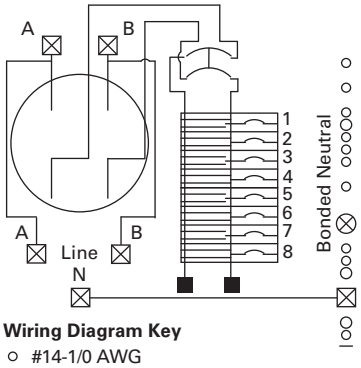


**Wiring Diagram Key**
- ○ #14-1/0 AWG
- ○ #14-6 AWG
- ⊗ #6-2/0 AWG
- ☒ #6-250 AWG
- ■ #4-300 AWG

### Catalog Number—CMBE24L200BTS

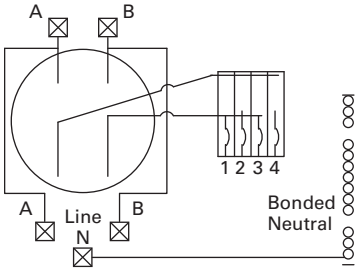


**Wiring Diagram Key**
- ○ #14-6 AWG
- ○ #14-1/0 AWG
- ☒ #6-250 AWG

### Catalog Numbers—MBE1224B100BTS, MBE1224B100BTF, MBE1224B125BTS and MBE1224B125BTF

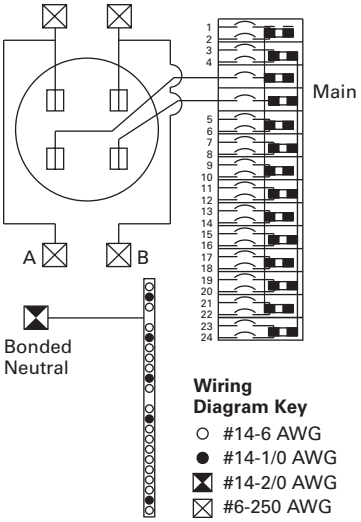


**Wiring Diagram Key**
- ○ #14-6 AWG
- ● #14-1/0 AWG
- ⧗ #14-2/0 AWG
- ☒ #6-250 AWG

### Catalog Numbers—MBE2040B150BF, MBE2040B200BS and MBE2040B200BF

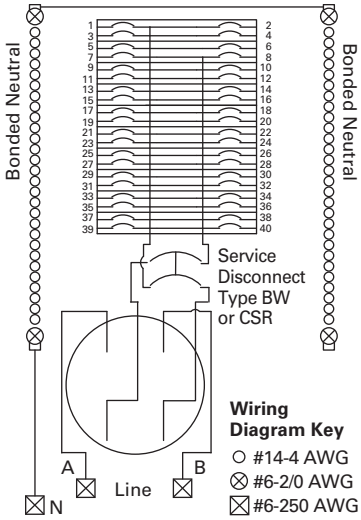


### Catalog Numbers—MBE1212L200BF and MBE1212L200BS

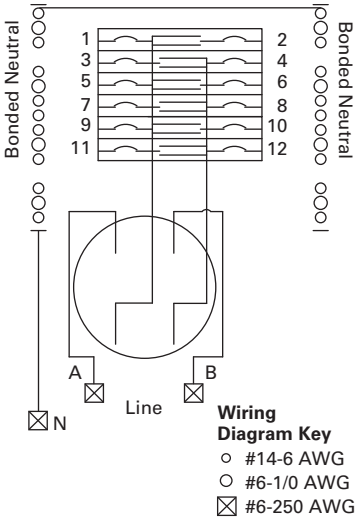


### Catalog Number—MBE1836B125BF

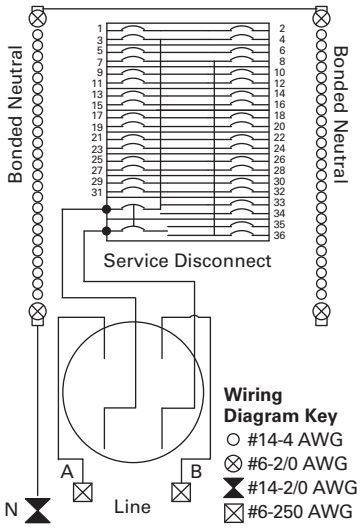


### Catalog Number—MBE3042B200BF

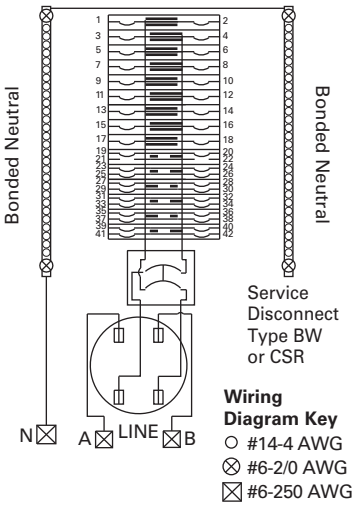

### Catalog Numbers—MBE1428B100BS and MBE1428B100BF

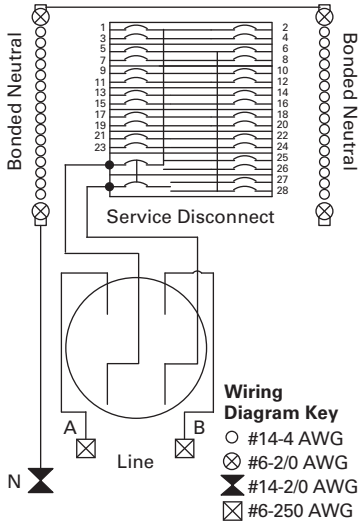


### Catalog Number—MBE3042B225BF

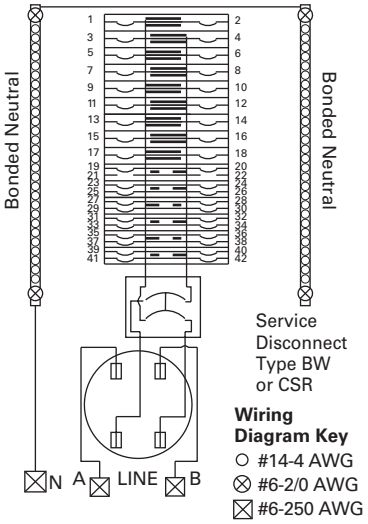


### Catalog Numbers—MBE2040B200BTS, MBE2040B150BTS, MBE2040BH200BTS and MBE2040BH200BTF

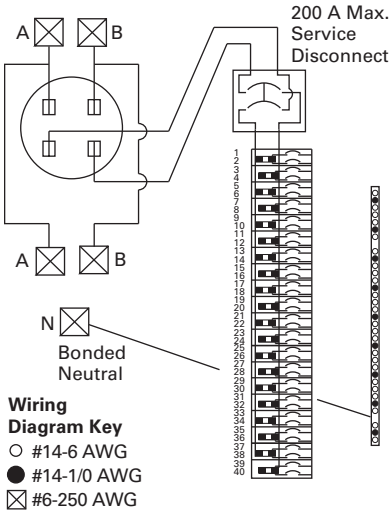


### Catalog Numbers—MBE24L125BTS and MBE24L125BTF

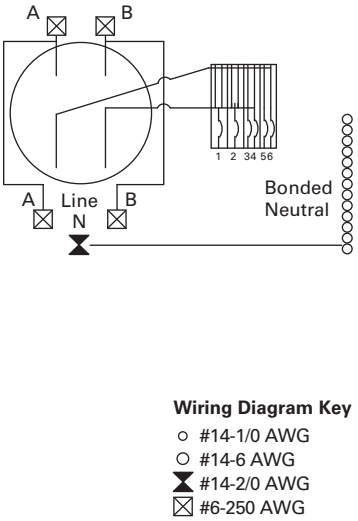

### Catalog Numbers—MBE48B150BTS, MBE48B200BTS, MBE48B200BTF

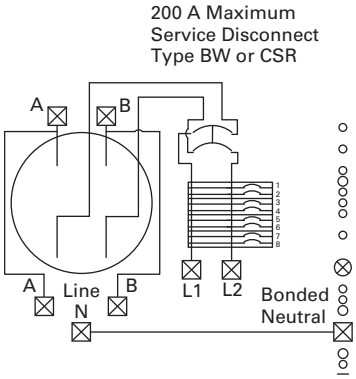


**Wiring Diagram Key**
- ○ #14-1/0 AWG
- ○ #14-6 AWG
- ⊗ #6-2/0 AWG
- ⊠ #6-250 AWG

### Catalog Numbers—MBE24L200BTS and MBE24L200BTF

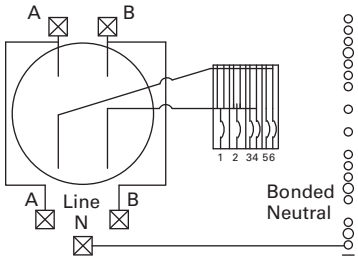


**Wiring Diagram Key**
- ○ #14-1/0 AWG
- ○ #14-6 AWG
- ⧗ #14-2/0 AWG
- ⊠ #6-250 AWG

### Catalog Numbers—MBEB200BTS and MBEB200BTF

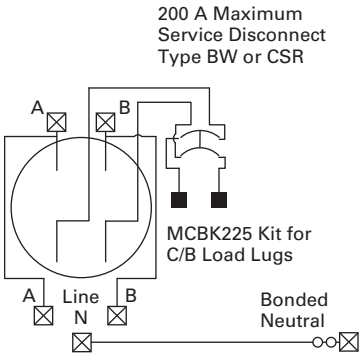


**Wiring Diagram Key**
- ○ #14-2/0 AWG
- ⊗ #6-2/0 AWG
- ⊠ #6-250 AWG

### Catalog Number—MBE88B200BTS

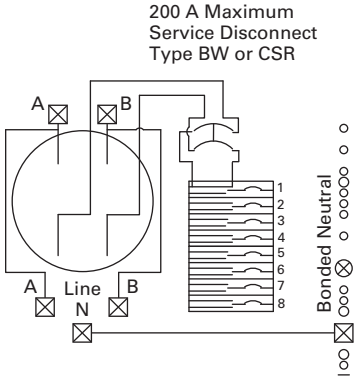


**Wiring Diagram Key**
- ○ #14-1/0 AWG
- ○ #14-6 AWG
- ⊗ #6-2/0 AWG
- ⊠ #6-250 AWG

### Catalog Numbers—MBE816P200TS and MBE816P200TSCU

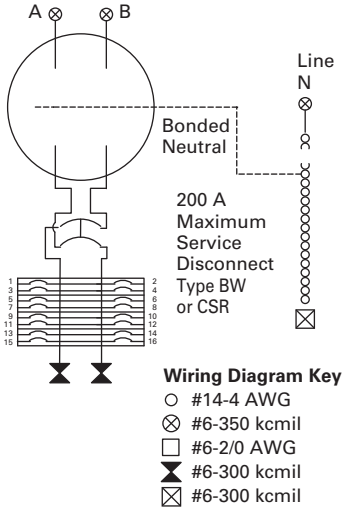


### Catalog Number—MBE1212L200BTS

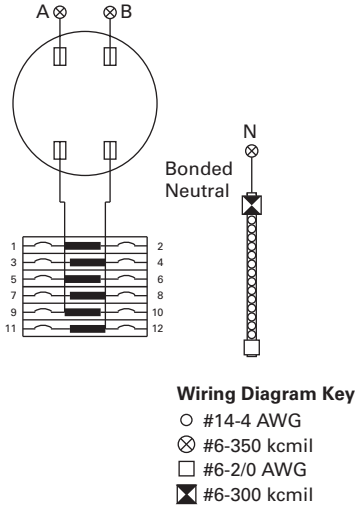


### Catalog Numbers— MBE2040B200TS and MBE2040B200TF

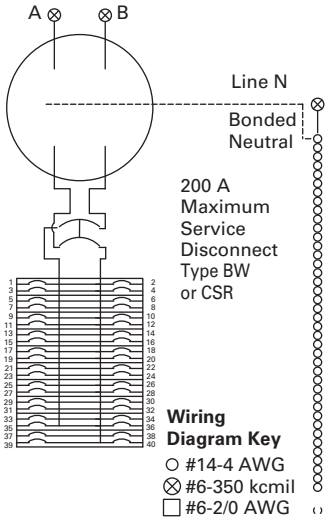


### Catalog Number—CMBE1212L200TS

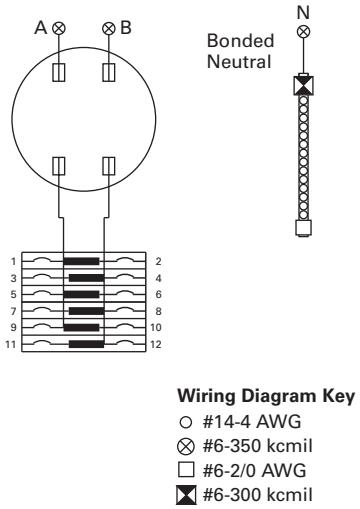


### Catalog Number—MBE1212L200BTS

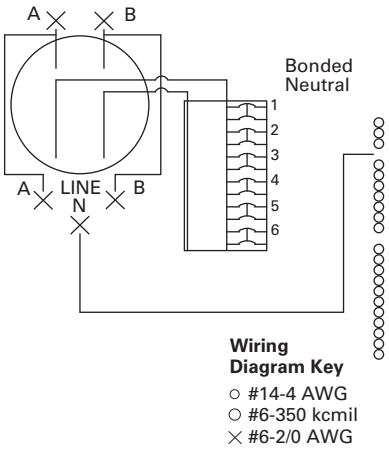


### Catalog Number—CMBE4242B200BTS

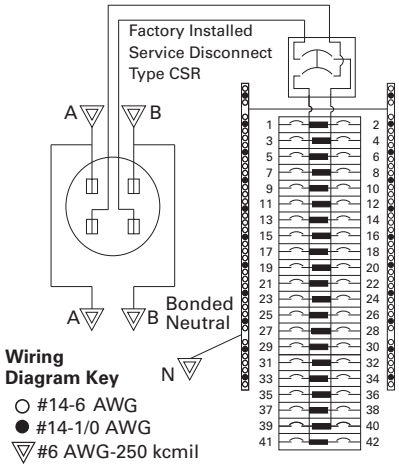

### Catalog Numbers—CMBER88B200BTS and CMBER88B200BTF

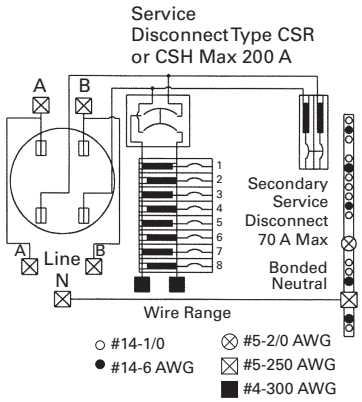


### Catalog Numbers—MBE2040B225BTS, MBE2040B225BTF

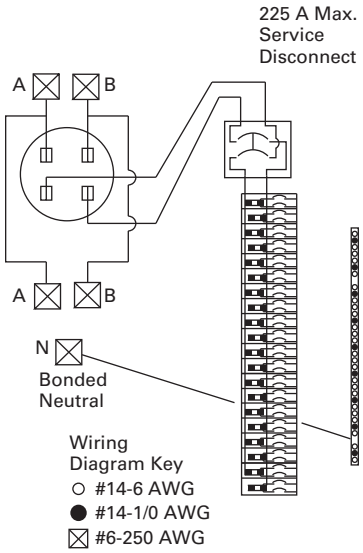


### Catalog Numbers—MBE4040B200BTS and MBE4040B200BSH

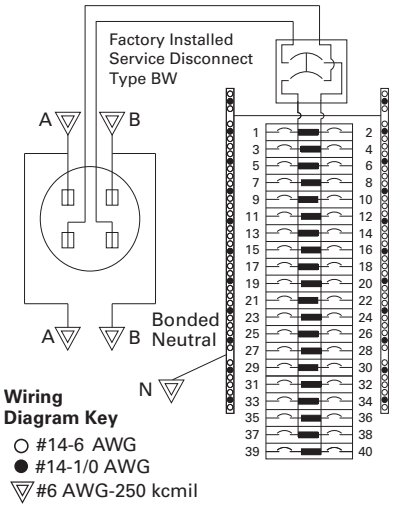


### Catalog Numbers—MBE1224B125TS and MBE1224B100TS

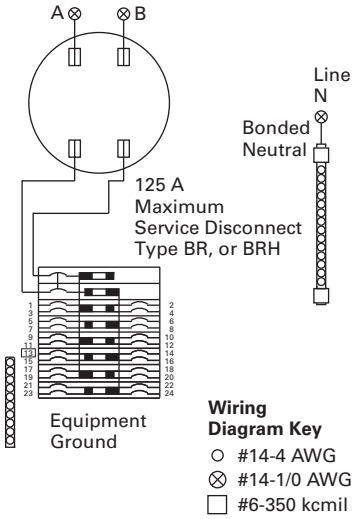


### Catalog Numbers—MBER48B200BTS and MER48B200BTF

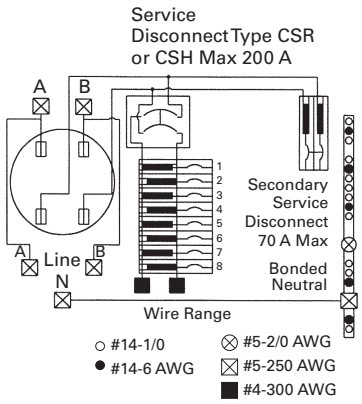

West Coast All-In-One Design

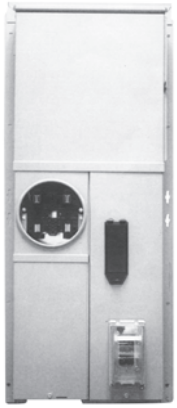

## Contents


| *Description* | *Page* |
|---|---|
| Residential Meter Breakers | **V1-T4-37** |
| Non-EUSERC Combination Service Entrance Devices 100–200 A Styles | **V1-T4-39** |
| Meets EUSERC Requirements Service Entrance Devices 100–225 A. | **V1-T4-48** |
| West Coast All-In-One Design | |
| Mechanical Interlock Cover | **V1-T4-65** |
| House Panels | **V1-T4-75** |
| Commercial Safety Sockets | **V1-T4-83** |
| CH Style Renovation Solutions | **V1-T4-86** |
| Aluminum Meter Breakers | **V1-T4-87** |




## West Coast All-In-One Design

### Product Description

A metering device that may contain a meter socket, main breaker and distribution section within the same enclosure.

### Features, Benefits and Functions

- Semi-flush mounting. 7-inch design ideal for stucco homes
- Endwall knockouts are easily accessible for future wiring without damaging stucco
- Knockout in back of case for mounting car-charging receptacle in garage (meets future electric car requirements)
- Outboard split neutral for easy wiring
- Commercial grade main breaker
- Value-added kits available: Hub adapter plate

## Product Selection

MBED3042B200BF

### 7-Inch Deep Meter Breaker—Standard Design OH/NG ①

| Ampere Rating | Bypass | Service | kAIC | Jaws | Distribution | Main | Branch Breaker Type | Catalog Number—Flush | Factory-Installed Kits |
|---|---|---|---|---|---|---|---|---|---|
| 100 | None | UG | 10 | 4 | 18/36 | BW2100 | BR | **MBED1836B100BF** | — |
| 125 | None | UG | 10 | 4 | 18/36 | BW2125 | BR | **MBED1836B125BF** | — |
| 200 | None | UG | 10 | 4 | 20/40 | BW2200 | BR | **MBED2040B200BF** | — |
| 200 ② | None | UG | 10 | 4 | 20/40 | BW2200 | BR | **MBED2040B200BFN** | — |
| 200 | None | UG | 10 | 4 | 30/42 | BW2200 | BR | **MBED3042B200BF** | — |
| 225 | None | UG | 10 | 4 | 20/40 | BW2225 | BR | **MBED2040B225BF** | — |
| 225 ② | None | UG | 10 | 4 | 20/40 | BW2225 | BR | **MBED2040B225BFN** | — |
| 225 | None | UG | 10 | 4 | 30/42 | BW2225 | BR | **MBED3042B225BF** | — |

## Accessories

### Hub Adapter Plate

| Description | Catalog Number |
|---|---|
| Hub adapter plate | **MBEDADPT** |

***Notes***

① Reference drawing EUSERC DWG-301A, G1

② Main Breaker Bus connected to 20/40 distribution. Main and Disconnect in same compartment.

## Wiring Diagrams

### Typical Wiring Diagram for Catalog Numbers MBED3042B200BF, MBED3042B225BF, MBED3042BH200BF

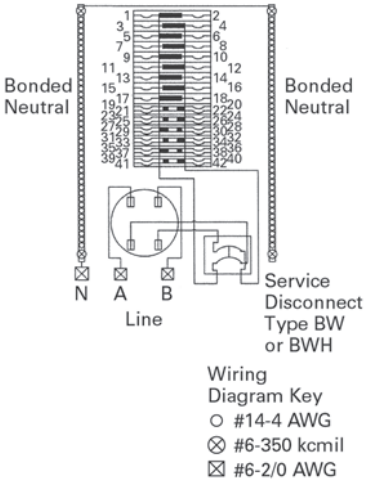


### Typical Wiring Diagram for Catalog Numbers MBED2040B200BFN, MBED2040B225BFN

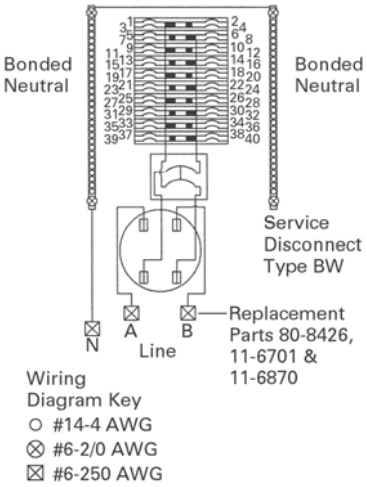


### Typical Wiring Diagram for Catalog Numbers MBED1836B100BF, MBED1836B125BF

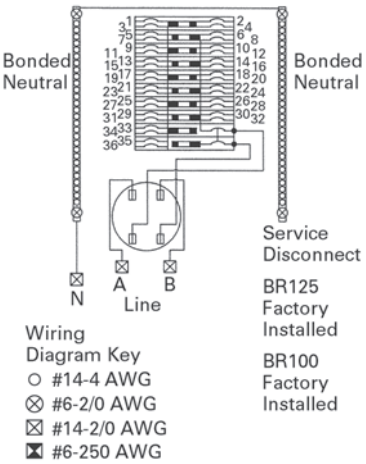


### Typical Wiring Diagram for Catalog Numbers MBED2040B200BF, MBED2040B225BF, MBED2040BH200BF, MBED2040BH225BF

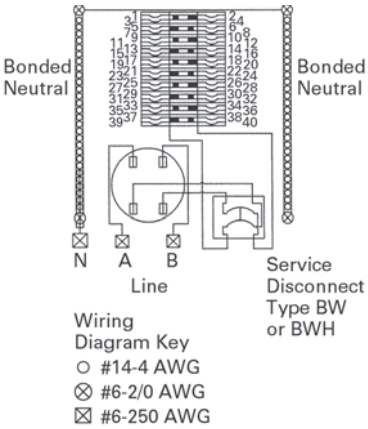

### Typical Wiring Diagram for Catalog Numbers MBEB2003040BB and MBEB2253040BB

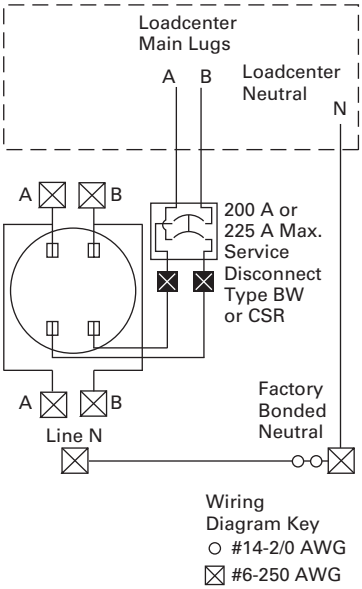


## Dimensions and Knockouts

Approximate Dimensions in Inches (mm)

### 7-Inch Deep Meter Breaker

| Catalog Number—Flush | Height | Width | Depth |
|---|---|---|---|
| **MBED1836B100BF** | 38.00 (965.2) | 14.19 (360.4) | 7.00 (177.8) |
| **MBED1836B125BF** | 38.00 (965.2) | 14.19 (360.4) | 7.00 (177.8) |
| **MBED2040B200BF** | 38.00 (965.2) | 14.19 (360.4) | 7.00 (177.8) |
| **MBED2040B200BFN** | 42.50 (1079.5) | 14.19 (360.4) | 7.00 (177.8) |
| **MBED3042B200BF** | 42.50 (1079.5) | 14.19 (360.4) | 7.00 (177.8) |
| **MBED2040B225BF** | 38.00 (965.2) | 14.19 (360.4) | 7.00 (177.8) |
| **MBED2040B225BFN** | 42.50 (1079.5) | 14.19 (360.4) | 7.00 (177.8) |
| **MBED3042B225BF** | 42.50 (1079.5) | 14.19 (360.4) | 7.00 (177.8) |

Approximate Dimensions in Inches (mm)

### Catalog Numbers MBED2040B200BFN, MBED20408225BFN, MBED3042B200BF, MBED3042B225BF, MBED2040B200BF, MBED2040B225BF, MBED1836B100BF, MBED1836B125BF

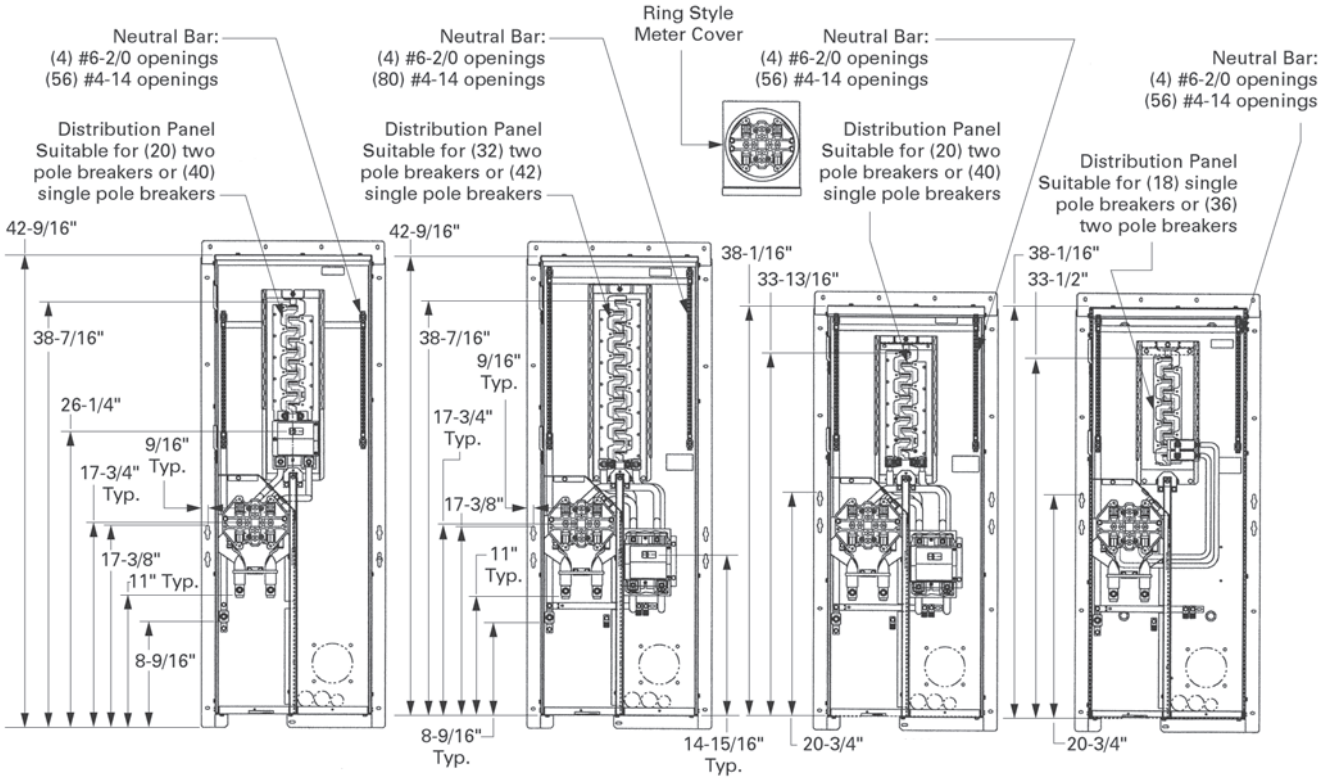


### Knockout Configurations and Dimensions for MBED2040B200BFN, MBED20408225BFN, MBED3042B200BF, MBED3042B225BF, MBED2040B200BF, MBED2040B225BF, MBED1836B100BF, MBED1836B125BF

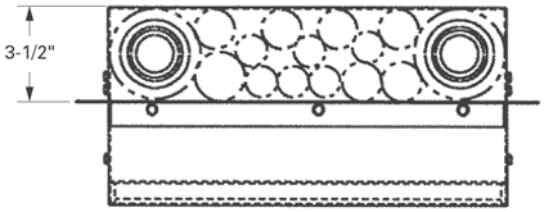


Top Endwall

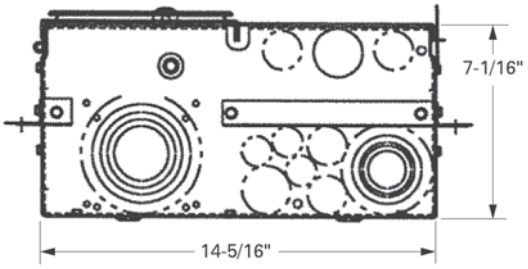


Bottom Endwall

Approximate Dimensions in Inches (mm)

### Catalog Numbers MBEB2003040BB, MBEB2253040BB

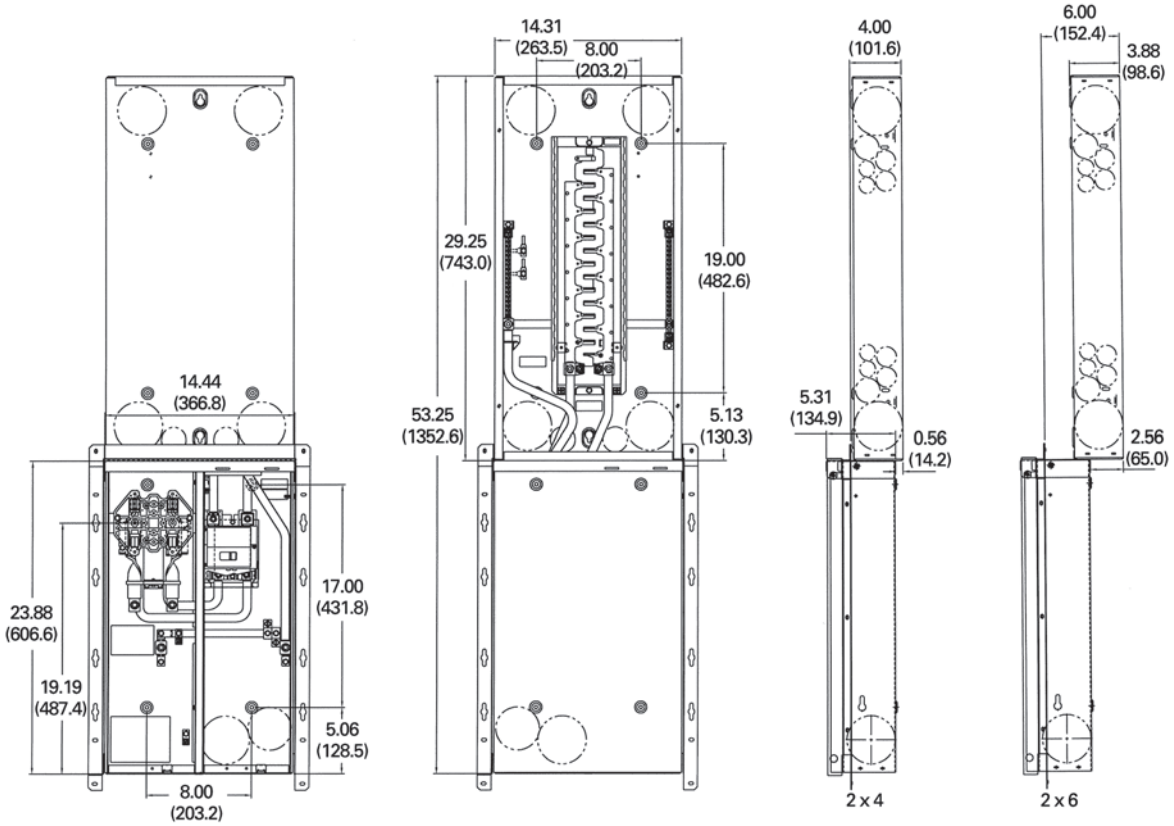


### Knockout Configurations for MBEB2003040BB, MBEB2253040BB

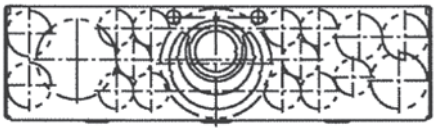

Top Endwall

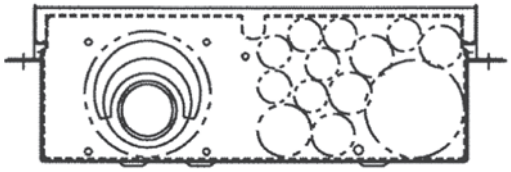

Bottom Endwall

Mechanical Interlock Cover

*Meter Breaker with Interlock Cover*

## Contents


| *Description* | *Page* |
|---|---|
| Residential Meter Breakers | **V1-T4-37** |
| Non-EUSERC Combination Service Entrance Devices 100–200 A Styles | **V1-T4-39** |
| Meets EUSERC Requirements Service Entrance Devices 100–225 A. | **V1-T4-48** |
| West Coast All-In-One Design | **V1-T4-59** |
| Mechanical Interlock Cover | |
| House Panels | **V1-T4-75** |
| Commercial Safety Sockets | **V1-T4-83** |
| CH Style Renovation Solutions | **V1-T4-86** |
| Aluminum Meter Breakers | **V1-T4-87** |




## Mechanical Interlock Cover

### Product Description

Covers mechanically interlock two breakers. Covers interlock main breaker with two-pole breaker mounted in the distribution section of the meter breakers.

## Product Selection

**Meter Breaker with Interlock Cover**

### Mechanical Interlock Cover

| Mechanical Interlock Deadfront | Meter Breaker Catalog Number |
|---|---|
| MBDF1M | **CMB1212B200BTS** |
| | **CMB1212B200BTSD** |
| | **CMB1212P200BTS** |
| | **CMB1212P200BTSD** |
| MBDF2M | **MB816B200BTS** |
| | **MB816B200BTSCU** |
| | **MB816P200BTS** |
| | **MB816P200BTSCU** |
| | **MB816P200STD** |
| MBDF3M | **MB2040B200BTS** |
| | **MB2040P200BTS** |
| | **MB2040P200SD** |
| MBDF4M | **MBE816P200TS** |
| | **MBE816P200TSCU** |
| MBDF5M | **MBE2040B150BF** |
| | **MBE2040B150BS** |
| | **MBE2040B200BF** |
| | **MBE2040B200BS** |
| MBDF6M | **MBE2040B200TF** |
| | **MBE2040B200TS** |
| | **MBE2040P200TF** |
| | **MBE2040P200TS** |
| MBDF7M | **CMBE3242B150BF** |
| | **CMBE3242B150BS** |
| | **CMBE3242B200BF** |
| | **CMBE3242B200BS** |
| | **CMB3242B150BS** |
| | **CMB3242B200BS** |
| MBDF8M | **CMBE4242B200BSH** |
| | **CMBE4242B200BTF** |
| | **CMBE4242B200BTS** |
| MBDF9M | **MBE4040B200BSH** |
| | **MBE4040B200BSHH** |
| | **MBE4040B200BTF** |
| | **MBE4040B200BTS** |

| Mechanical Interlock Deadfront | Meter Breaker Catalog Number |
|---|---|
| MBDF1AM | **CMB2424M200BTS** |
| MBDF10M | **CMB24B200TFR** |
| | **CMB24B200TSR** |
| MBDF11M | **CMBXB200BTS** |
| | **CMBXP200BTS** |
| MBDF12M | **CMBX3242B200BTS** |
| | **CMBX3242P200BTS** |
| MBDF13M | **MBE3042B200BF** |
| | **MBE3042B225BF** |
| MBDF14M | **CMBE88B150BTF** |
| | **CMBE88B150BTS** |
| | **CMBE88B200BTF** |
| | **CMBE88B200BTS** |
| | **CMB88B150BTS** |
| | **CMB88B200BTS** |
| MBDF15M | **MBE48B150BTF** |
| | **MBE48B150BTS** |
| | **MBE48B200BTF** |
| | **MBE48B200BTS** |
| MBDF16M | **MBE88B150BTF** |
| | **MBE88B150BTS** |
| | **MBE88B200BTF** |
| | **MBE88B200BTS** |
| MBDF17M | **MBE2040BC200BTS** |
| | **MBE2040BH200BTF** |
| | **MBE2040BH200BTS** |
| | **MBE2040B150BTF** |
| | **MBE2040B150BTS** |
| | **MBE2040B200BTF** |
| | **MBE2040B200BTS** |
| | **MBE2040B200BTSV** |
| | **MBE2040B225BTF** |
| | **MBE2040B225BTS** |

## Technical Data and Specifications

### Meter Breaker Parts ①

| Description | Catalog Number |
|---|---|
| **5th Jaw Kits** | |
| Compact and standard styles (MB and CMB) | **MB5JAWKIT** |
| EUSERC style | **IMM5JKOP** ② |
| **Horn Bypass Kits** | |
| Ringless Style units only (MB and CMB) | **MBHBPKIT** |

### Hub Selection Chart

| Hub Size Dimensions in Inches (mm) | Catalog Number |
|---|---|
| 1.00 (25.4) | **DS100H2** |
| 1.25 (31.8) | **DS125H2** |
| 1.50 (38.1) | **DS150H2** |
| 2.00 (50.8) | **DS200H2** |
| 2.50 (63.5) | **DS250H2** |
| 3.00 (76.2) | **DS300H2** |

### Top Endwall (Surface)

| Hub Provision Catalog Number | |
|---|---|
| **DS100H2** | |
| **DS125H2** | |
| **DS150H2** | |
| **DS200H2** | |
| **DS250H2** | |
| **DS300H2** | |
| **DS900AP** | (Adapter Plate if using DS___H1 hubs only) ③ |

### Wire Size Chart

| Main | Wire Size Range Cu/Al 60 °C or 75 °C for Line Terminals |
|---|---|
| BR250 | #14–4 kcmil |
| BR260 | #4–1/0 kcmil |
| BR270 | #4–1/0 kcmil |
| BR280 | #4–1/0 kcmil |
| BR290 | #4–1/0 kcmil |
| BR2100 | #4–1/0 kcmil |
| BW2125 | #2–300 kcmil |
| BW2150 | #2–300 kcmil |
| BW2200 | #2–300 kcmil |
| CSR2125 | #2–300 kcmil |
| CSR2150 | #2–300 kcmil |
| CSR2200 | #2–300 kcmil |
| CSR2125N | #1/0–250 kcmil |
| CSR2150N | #1/0–250 kcmil |
| CSR2200N | #1/0–250 kcmil |
| 125 A main lugs | — |
| 200 A main lugs | — |
| MCBK225 | #2–300 kcmil |

### Wire Size is Determined by the Circuit Breaker Installed in the Enclosure

| Wire/Application | Maximum Wire Size | Ampere Rating |
|---|---|---|
| Aluminum—Standard | 250 kcmil | 200 |
| Aluminum—Service Entrance | 250 kcmil | 225 |
| Copper—Standard and Service Entrance | 250 kcmil | 225 |

***Notes***

① For breakers under 70 A used in backfed applications, add "B" to the end of the catalog string to get the appropriate "hold-down" version.

② Reference drawing EUSERC DWG-G1.

③ Use when DS H1 Type 1, 1.25 and 1.50-inch hubs are needed.

Use DS...H2 hubs for bottom endwalls (for all units). Use RH hubs for top endwalls on semi-flush units. Use DS...H2 hubs for top endwalls on surface devices.

## Dimensions and Knockouts

Approximate Dimensions in Inches (mm)

### Box Styles—Five Different Styles (Shapes) of Product

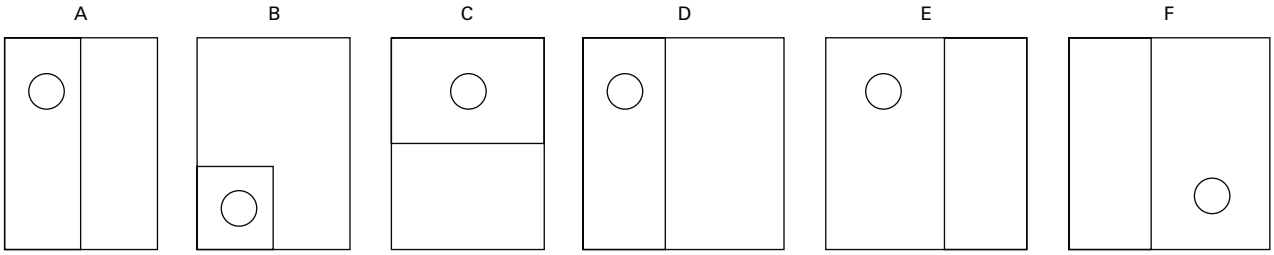


### Box Dimensions

| Box Number | Height | Width | Depth | Box Style |
|---|---|---|---|---|
| 1 | 12.50 (317.5) | 14.44 (366.7) | 4.00 (101.6) | A |
| 2 | 23.88 (606.4) | 14.44 (366.7) | 5.38 (136.5) | A |
| 3 | 28.38 (720.7) | 14.44 (366.7) | 5.38 (136.5) | A |
| 4 | 34.13 (866.8) | 14.44 (366.7) | 5.38 (136.5) | B |
| 5 | 36.13 (917.6) | 14.44 (366.7) | 5.38 (136.5) | B |
| 6 | 43.38 (1101.7) | 14.44 (366.7) | 5.38 (136.5) | B |
| 7 | 46.88 (1190.6) | 14.44 (366.7) | 5.38 (136.5) | B |
| 8 | 19.75 (501.7) | 7.50 (190.5) | 4.00 (101.6) | C |
| 9 | 25.00 (635.0) | 14.44 (366.7) | 5.38 (136.5) | C |
| 10 | 32.38 (822.3) | 14.44 (366.7) | 5.38 (136.5) | C |
| 11 | 36.63 (930.3) | 14.44 (366.7) | 5.38 (136.5) | C |
| 12 | 34.38 (873.1) | 22.00 (558.8) | 5.38 (136.5) | D |
| 13 | 19.75 (501.7) | 14.44 (366.7) | 5.38 (136.5) | E |
| 14 | 39.91 (1013.7) | 14.44 (366.7) | 5.38 (136.5) | C |
| 15 | 23.88 (606.6) | 13.00 (330.2) | 4.94 (125.5) | F |
| 16 | 28.38 (720.9) | 13.00 (330.2) | 4.94 (125.5) | F |
| 17 | 34.19 (868.4) | 22.13 (562.1) | 5.00 (127.0) | D |
| 18 | 36.06 (915.9) | 16.63 (422.4) | 5.50 (139.7) | A |
| 19 | 28.38 (720.9) | 14.44 (366.8) | 4.94 (125.5) | A |
| 20 | 32.06 (814.3) | 14.44 (366.8) | 4.94 (125.5) | C |
| 21 | 25.50 (647.7) | 14.44 (366.8) | 4.94 (125.5) | C |

Approximate Dimensions in Inches (mm)

### Knockouts for Stucco and Surface Units Catalog Numbers—CMBE3242B200BF, CMBE3242B225BF, MBE2040B200BF, MBE2040B150BF, MBE1428B100BF, MBE1212L200BTF, MBE1836B125BF and MBE1212L200BTS

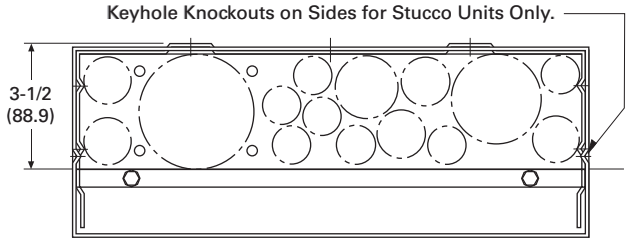


Top Stucco

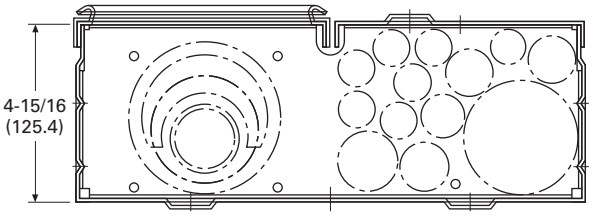


Bottom

### Knockouts for Stucco and Surface Units Catalog Numbers—CMBE3242B150BS, CMBE3242B200BS, CMBE3242B225BS, CMBE1212L200BS, MBE2040B200BS, MBE1428B100BS, MBE1212L200BTS, CMB3242B150BS and CMB3242B200BS

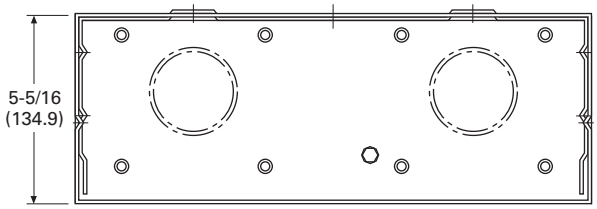


Top Surface

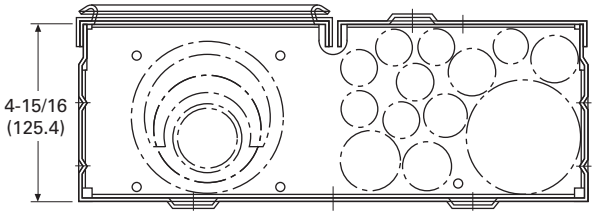


Bottom

### Top Endwall (Surface)

| Hub Provision Catalog Number | Quantity |
|---|---|
| **DS100H2** | ① |
| **DS125H2** | ① |
| **DS150H2** | ① |
| **DS200H2** | ① |
| **DS250H2** | ① |
| **DS300H2** | ① |
| **DS900AP** (Adapter Plate if using DS___H1 hubs only) ② | ① |

### Top Endwall (Stucco) ③

| Knockout Size Dimensions in Inches (mm) | Quantity |
|---|---|
| 1.25, 1.50, 2.00, 2.50 (31.8, 38.1, 50.8, 63.5) | 1 |
| 1.00, 1.25, 1.50 (25.4, 31.8, 38.1) | 1 |
| 0.50, 0.75, 1.00 (12.7, 19.1, 25.4) | 1 |
| 0.50, 0.75 (12.7, 19.1) | 3 |
| 0.50 (12.7) | 3 |

### Bottom Endwall

| Knockout Size Dimensions in Inches (mm) | Quantity |
|---|---|
| 0.50 (12.7) | 7 |
| 0.50, 0.75 (12.7, 19.1) | 4 |
| 0.50, 0.75, 1.00 (12.7, 19.1, 25.4) | 1 |
| 1.00, 1.25, 1.50, 2.00 (25.4, 31.8, 38.1, 50.8) | 1 |
| 1.25, 1.50, 2.00, 2.50, 3.00 (31.8, 38.1, 50.8, 63.5, 76.2) | 1 |

***Notes***

① For details regarding quantities, please contact the Technical Resource Center (TRC) at 1-877-ETN-CARE.

② Use when DS H1 Type 1, 1.25 and 1.50-inch hubs are needed.

③ RH hubs are to be used for Top Endwall (Stucco) endwalls.

Approximate Dimensions in Inches (mm)

### Knockouts for Stucco and Surface Units Catalog Numbers—CMBE88B150BTF, CMBE88B200BTF, MBE24L125BTF, MBE24L200BTF, MBE48B200BTF, MBEB200BTF, MBE1224B100BTF and MBE1224B125BTF

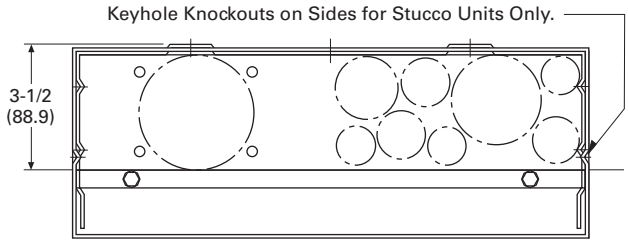


Top Stucco

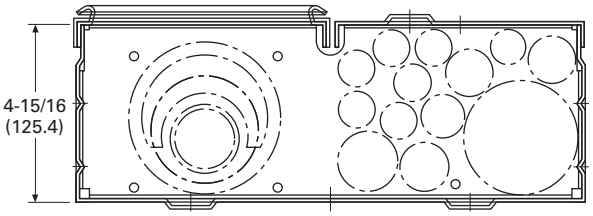


Bottom

### Knockouts for Stucco and Surface Units Catalog Numbers—CMBB150BTS, CMBB200BTS, CMBP200BTS, CMBE24L125BTS, CMB24L125BTS, CMBE24L200BTS, CMBEB200BTS, CMBEB150BTS, CMBE88B150BTS, CMBP200BTS, CMBE88B200BTS, MBE24L125BTS, MBE24L200BTS, MBE48B150BTS, MBE48B200BTS, MBE88B200BTS, MBEB200BTS, MBE1224B100BTS, MBE1224B125BTS, CMB88B150BTS, CMB88B200BTS and MB48B200BTS

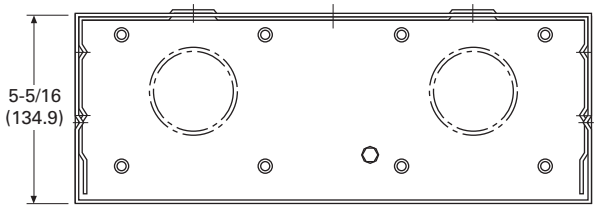


Top Surface

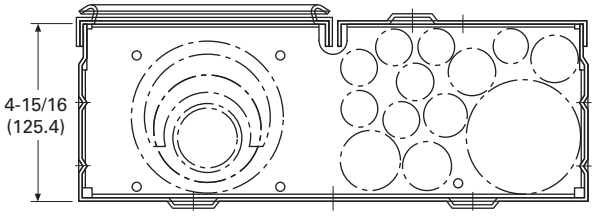


Bottom

### Top Endwall (Surface)

| Hub Provision Catalog Number | Quantity |
|---|---|
| **DS100H2** | ① |
| **DS125H2** | ① |
| **DS150H2** | ① |
| **DS200H2** | ① |
| **DS250H2** | ① |
| **DS300H2** | ① |
| **DS900AP** (Adapter Plate if using DS___H1 hubs only) ② | ① |

### Top Endwall (Stucco) ③

| Knockout Size Dimensions in Inches (mm) | Quantity |
|---|---|
| 1.25, 1.50, 2.00, 2.50 (31.8, 38.1, 50.8, 63.5) | 1 |
| 1.00, 1.25, 1.50 (25.4, 31.8, 38.1) | 1 |
| 0.50, 0.75, 1.00 (12.7, 19.1, 25.4) | 1 |
| 0.50, 0.75 (12.7, 19.1) | 3 |
| 0.50 (12.7) | 3 |

### Bottom Endwall

| Knockout Size Dimensions in Inches (mm) | Quantity |
|---|---|
| 0.50 (12.7) | 7 |
| 0.50, 0.75 (12.7, 19.1) | 4 |
| 0.50, 0.75, 1.00 (12.7, 19.1, 25.4) | 1 |
| 1.00, 1.25, 1.50, 2.00 (25.4, 31.8, 38.1, 50.8) | 1 |
| 1.25, 1.50, 2.00, 2.50, 3.00 (31.8, 38.1, 50.8, 63.5, 76.2) | 1 |

***Notes***

① For details regarding quantities, please contact the Technical Resource Center (TRC) at 1-877-ETN-CARE.

② Use when DS H1 Type 1, 1.25 and 1.50-inch hubs are needed.

③ RH hubs are to be used for Top Endwall (Stucco) endwalls.

Approximate Dimensions in Inches (mm)

### Knockouts for Stucco and Surface Units Catalog Number—MMBE2040B200TF

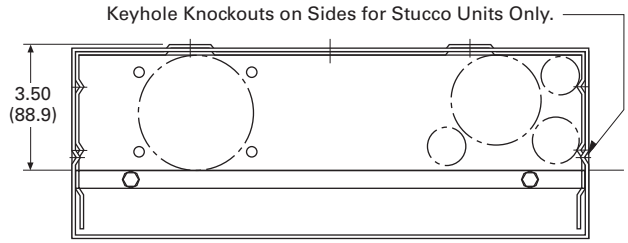


Top Stucco

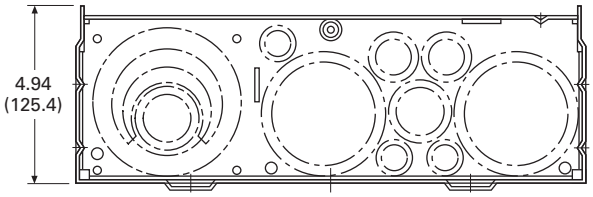


Bottom

### Knockouts for Stucco and Surface Units Catalog Numbers—MBE1224B100TS, MBE1224B125TS, MBE816P200TS, MBE816P200TSCU, MBE2040B200TS, CMB1212P200BTS, CMB1212P200BTSD, CMB1212B200BTS, MB1212L200BTS and CMB1212L200BTS

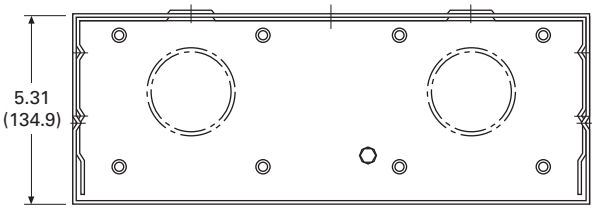


Top Surface

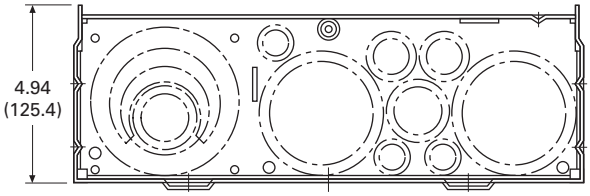


Bottom

### Top Endwall (Surface)

| Hub Provision Catalog Number | Quantity |
|---|---|
| **DS100H2** | ① |
| **DS125H2** | ① |
| **DS150H2** | ① |
| **DS200H2** | ① |
| **DS250H2** | ① |
| **DS300H2** | ① |
| **DS900AP** (Adapter Plate) ② | ① |

### Top Endwall (Stucco) ③

| Knockout Size Dimensions in Inches (mm) | Quantity |
|---|---|
| 1.25, 1.50, 2.00, 2.50 (31.8, 38.1, 50.8, 63.5) | 1 |
| 1.00, 1.25, 1.50 (25.4, 31.8, 38.1) | 1 |
| 0.50, 0.75, 1.00 (12.7, 19.1, 25.4) | 1 |
| 0.50, 0.75 (12.7, 19.1) | 3 |
| 0.50 (12.7) | 3 |

### Bottom Endwall

| Knockout Size Dimensions in Inches (mm) | Quantity |
|---|---|
| 0.50 (12.7) | 7 |
| 0.50, 0.75 (12.7, 19.1) | 4 |
| 0.50, 0.75, 1.00 (12.7, 19.1, 25.4) | 1 |
| 1.00, 1.25, 1.50, 2.00 (25.4, 31.8, 38.1, 50.8) | 1 |
| 1.25, 1.50, 2.00, 2.50, 3.00 (31.8, 38.1, 50.8, 63.5, 76.2) | 1 |

***Notes***

① For details regarding quantities, please contact the Technical Resource Center (TRC) at 1-877-ETN-CARE.

② Use when DS H1 Type 1, 1.25 and 1.50-inch hubs are needed.

③ RH hubs are to be used for Top Endwall (Stucco) endwalls.

Approximate Dimensions in Inches (mm)

## Knockouts for Stucco and Surface Units

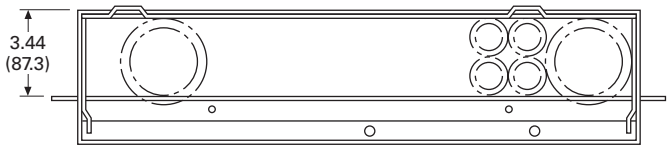


Top Flush

**MBE4040B200BTF**

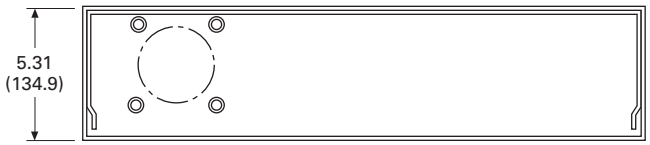


Top Surface

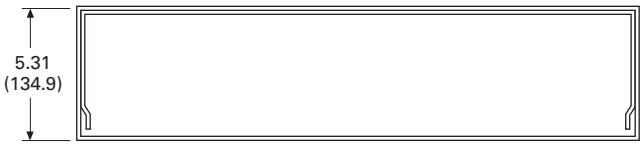


Top Surface

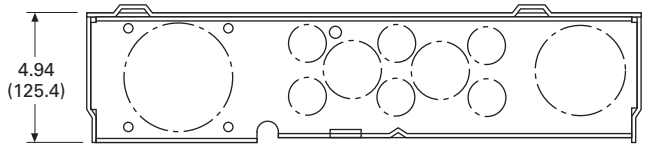


Bottom

**CMBE4242B200BTS**
**MBE4040B200BTS**

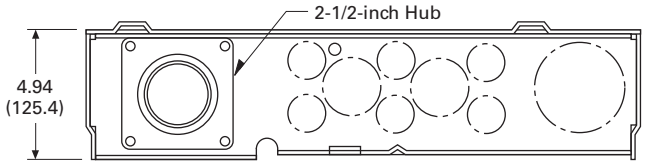


Bottom

**MBE4040B200BSH**

## Top Endwall (Surface)

| Hub Provision Catalog Number | Quantity |
|---|---|
| **DS100H2** | ① |
| **DS125H2** | ① |
| **DS150H2** | ① |
| **DS200H2** | ① |
| **DS250H2** | ① |
| **DS300H2** | ① |
| **DS900AP** (Adapter Plate) ② | ① |

## Top Endwall (Stucco) ③

| Knockout Size Dimensions in Inches (mm) | Quantity |
|---|---|
| 1.25, 1.50, 2.00, 2.50 (31.8, 38.1, 50.8, 63.5) | 2 |
| 0.50, 0.75 (12.7, 19.1) | 3 |

## Bottom Endwall

| Knockout Size Dimensions in Inches (mm) | Quantity |
|---|---|
| 0.50, 0.75 (12.7, 19.1) | 6 |
| 0.50, 0.75, 1, 1.25 (12.7, 19.1, 25.4, 31.8) | 2 |
| 1.00, 1.25, 1.50, 2.00, 2.50 (25.4, 31.8, 38.1, 50.8, 63.5) | 1 |
| 1.00, 1.25, 1.50, 2.00, 2.50, 3.00 (25.4, 31.8, 38.1, 50.8, 63.5, 76.2) | 1 |

***Notes***

① For details regarding quantities, please contact the Technical Resource Center (TRC) at 1-877-ETN-CARE.
② Use when DS H1 Type 1, 1.25 and 1.50-inch hubs are needed.
③ RH hubs are to be used for Top Endwall (Stucco) endwalls.

Approximate Dimensions in Inches (mm)

### Knockout Configurations and Dimensions for Catalog Numbers MBER48B200BTS and CMBER88B200BTS

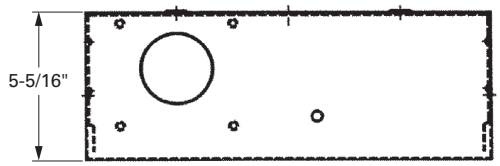


**Top Surface**

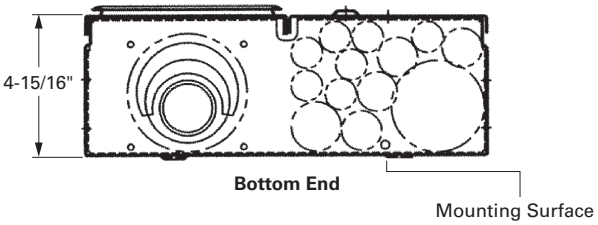


**Bottom End**

### Semi-Flush Stucco Unit Knockout Configurations and Dimensions for MBE2040B200BTS, MBE2040B225BTS, MBE2040B200BTF and MBE2040B225BTF

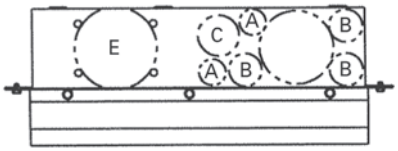


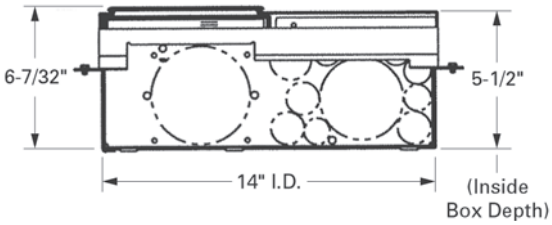


### Knockout Configurations and Dimensions for Catalog Numbers CMBXP200BTS, CMBXB200BTS, CMBX1212P200BTS and CMBX3242P200BTS, CMBX3242B200BTS, CMBX1212B200BTS

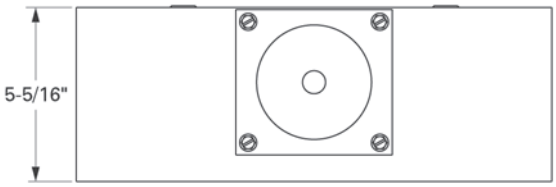


Top Endwall

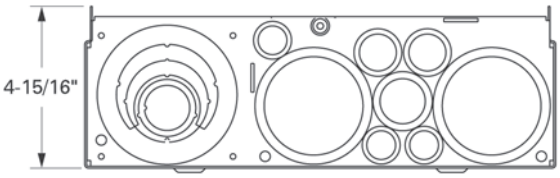


Bottom Endwall

### Knockout Configurations and Dimensions for Catalog Numbers MBT48B125BTS, MBT48B150BTS, MBT48B200BTS and MBT48P200BTS

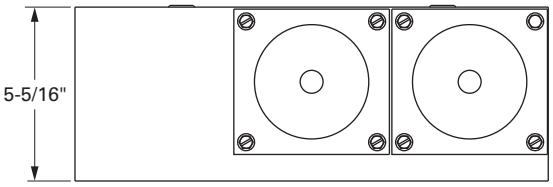


Top Surface

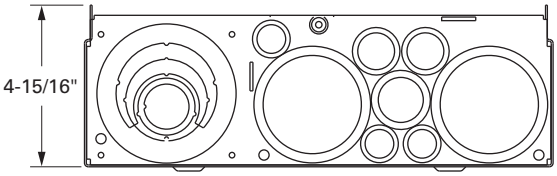


Bottom

### Surface Unit Knockout Configurations and Dimensions for MBE2040B200BTS, MBE2040B225BTS, MBE2040B200BTF and MBE2040B225BTF

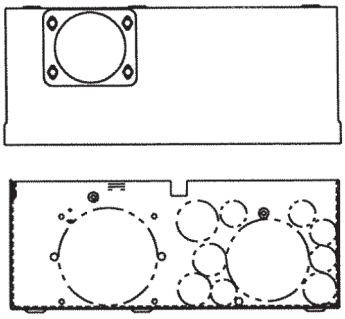

Approximate Dimensions in Inches (mm)

### Knockouts for Non-EUSERC Units Catalog Numbers—MBB150BTS, MBB200BTS, MBP200BTS, MB816P200BTS, MB816P200BTSCU, MB816P200BTSD, MB816B200BTS, MB816B200BTSCU, MB2040P200BTS, MB2040B200BTS, MBP200BTSD, MBP200SD, MB816P200STD, MB2040B150SD, MB2040B200SD and MB2040P200SD

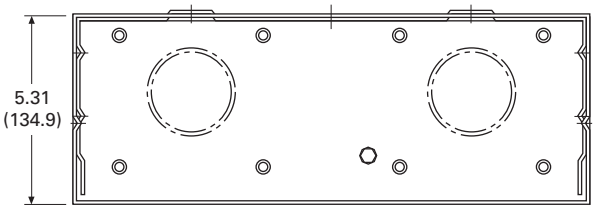


Top Surface

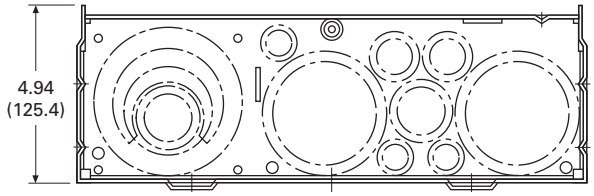


Bottom

### Top Endwall (Surface)

| Hub Provision Catalog Number | Quantity |
|---|---|
| **DS100H2** | ① |
| **DS125H2** | ① |
| **DS150H2** | ① |
| **DS200H2** | ① |
| **DS250H2** | ① |
| **DS300H2** | ① |
| **DS900AP** (Adapter Plate) ② | ① |

### Knockouts for Non-EUSERC Units Catalog Number—CHMMB100BTS

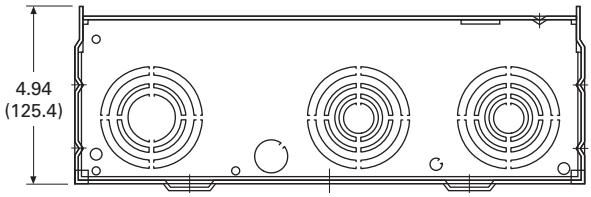


Bottom

### Bottom Endwall

| Knockout Size Dimensions in Inches (mm) | Quantity |
|---|---|
| 0.31 (7.9) | 1 |
| 0.50 (12.7) | 1 |
| 0.50, 0.75, 1.00, 1.25, 1.50, 2.00, 2.50 (12.7, 19.1, 25.4, 31.8, 38.1, 50.8, 63.5) | 2 |
| 1,00, 1.25, 1.50, 2.00, 2.50 (25.4, 31.8, 38.1, 50.8, 63.5) | 1 |

### Knockouts for Non-EUSERC Units Catalog Numbers—CMB2424B200BTS, MBB150BTSCR, MBB200BTSCR, MBB150BTSC, MBB200BTSC and CMB2436B200BTS

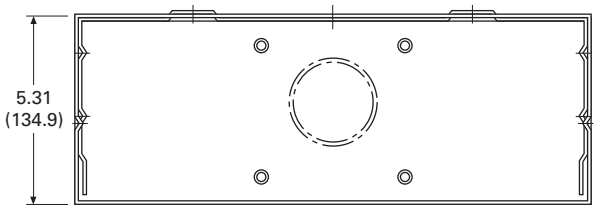


Top Surface (Catalog Numbers with SC and SCR Suffix Only)

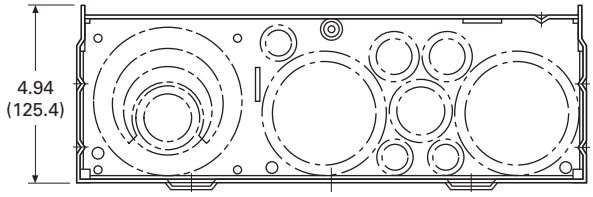


Bottom

### Bottom Endwall

| Knockout Size Dimensions in Inches (mm) | Quantity |
|---|---|
| 0.31 (7.9) | 3 |
| 0.50 (12.7) | 3 |
| 0.50, 0.75 (12.7, 19.1) | 2 |
| 0.75, 1.00 (12.7, 25.4) | 1 |
| 1.25, 1.50, 2.00, 2.50 (19.1, 38.1, 50.8, 63.5) | 2 |
| 1.50, 2.00, 2.50, 3.00 (38.1, 50.8, 63.5, 76.2) | 1 |

### Knockouts for Non-EUSERC Units Catalog Numbers—CHMMB150BTS and CHMMB200BTS

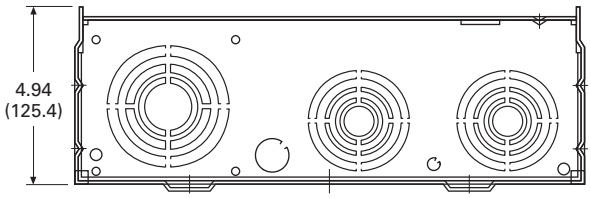


Bottom

### Bottom Endwall

| Knockout Size Dimensions in Inches (mm) | Quantity |
|---|---|
| 0.31 (7.9) | 1 |
| 0.50 (12.7) | 1 |
| 0.50, 0.75, 1.00, 1.25, 1.50, 2.00, 2.50 (12.7, 19.1, 25.4, 31.8, 38.1, 50.8, 63.5) | 2 |
| 1.00, 1.25, 1.50, 2.00, 2.50, 3.00 (25.4, 31.8, 38.1, 50.8, 63.5, 76.2) | 1 |

***Notes***

① For details regarding quantities, please contact the Technical Resource Center (TRC) at 1-877-ETN-CARE.

② Use when DS H1 Type 1, 1.25 and 1.50-inch hubs are needed.

House Panels

## Contents


| *Description* | *Page* |
|---|---|
| Residential Meter Breakers | **V1-T4-37** |
| Non-EUSERC Combination Service Entrance Devices 100–200 A Styles | **V1-T4-39** |
| Meets EUSERC Requirements Service Entrance Devices 100–225 A. | **V1-T4-48** |
| West Coast All-In-One Design | **V1-T4-59** |
| Mechanical Interlock Cover | **V1-T4-65** |
| House Panels | |
| Commercial Safety Sockets | **V1-T4-83** |
| CH Style Renovation Solutions | **V1-T4-86** |
| Aluminum Meter Breakers | **V1-T4-87** |




## House Panels

### Product Description

Eaton's House Panels offer a faster, easier and safer installation.These 400 A units are ideal for larger homes in North America that require meter breakers. Available in both CH and BR styles, these service entrance devices consist of a meter socket and a distribution section. In response to contractor feedback, these panels have been redesigned with a focus on flexibility, simplified wiring, and an overall ease of installation. All units come standard with a 22 kAIC main breaker.The load conductors can exit the top, bottom, side or back for greater application and installation flexibility.

### Application Description

Additionally, Eaton's House Panels can be used for apartments, condominiums, clubhouses or common areas.

### Features, Benefits and Functions

- NEMA 3R rainproof
- Rated for service entrance equipment
- Lever bypass socket available on certain catalog numbers
- Pin type door hinges
- Socket to distribution section is connected via insulated cable for safety
- Second main space can accept 100–200 A BW, CSR or CSR breakers

### Standards and Certifications

- Ring style units meet EUSERC requirements
- UL listed

Listed

## Product Selection

**House Panels**

### 400 A "House Panels"

| Ampere Rating | Security ① | Bypass ② | Main Breaker | Optional Secondary Main Breaker (Not Included) | Service Type | kAIC | Dist. | Line Side Main Lugs and Neutral (Lugs Not Included) | Semi-Flush Catalog Number ③ | Surface Catalog Number |
|---|---|---|---|---|---|---|---|---|---|---|
| 300 | Ringless | Lever | CSR2150 | BW/CSR | OH/UG | 22 | 8/16 | Lug landings for compression | — | **HP816P300BSL** |
| 300 | Ringless | Lever | CSR2150 | BW/CSR | UG | 22 | None | | — | **HPC30SHL** |
| 400 | Ring | None | CSR2200N | CSH | UG | 22 | 32/42 | | — | **CG403242SH** ④ |
| 400 | Ring | None | CSR2200N | CSH | UG | 22 | 12/12 | | — | **CG1212P400BS** ④⑤ |
| 400 | Ring | Manual | CSR2200 | BRH/CSR | UG | 22 | None | | — | **HP40SHA** ⑥ |
| 400 | Ring | Manual | CSR2200 | BRH/CSR | UG | 22 | 40/40 | | — | **HP404040SHA** ⑥⑦ |
| 400 | Ring | None | DK2400 | None | UG | 22 | None | | — | **HP40** ④ |
| 400 | Ring | None | CSR2200 | BRH/CSR | UG | 22 | None | | — | **HP40SH** ④④⑥ |
| 400 | Ring | None | DK2400 | None | UG | 22 | 24/42 | | — | **HP402442** ④ |
| 400 | Ring | None | CSR220 | BRH/CSR | UG | 22 | 40/40 | | **HP404040SHF** ④ | **HP404040SH** ④⑥ |
| 400 | Ring | Manual | CSR2200 | BRH/CSR | UG | 22 | 40/40 | | **HP404040SHFA** ⑦ | — |
| 400 | Ring | None | CSR2200 | BRH/CSR | UG | 22 | 8/16 | | — | **HP816P400BS** ④⑤⑥ |
| 400 | Ringless | Lever | CSR2200N | CSH | UG | 22 | 12/12 | | — | **CG1212P400BSL** ⑤ |
| 400 | Ringless | Lever | CSR2200N | CSH | UG | 22 | 42/42 | | — | **CG404242SHL** |
| 400 | Ringless | Lever | CSR2200 | BRH/CSR | UG | 22 | None | | — | **HP40SHL** ⑥ |
| 400 | Ringless | Lever | CSR2200 | BRH/CSR | OH/UG | 22 | None | | — | **HPC40SHL** ⑥ |
| 400 | Ringless | Lever | CSR2200 | BRH/CSR | UG | 22 | 40/40 | | — | **HP404040SHL** ⑥ |
| 400 | Ringless | Lever | CSR2200 | BRH/CSR | UG | 22 | 8/16 | | — | **HP816P400BSL** ⑤⑥ |
| 400 | Ringless | Lever | CSR2200 | BRH/CSR | OH/UG | 22 | 4/6 | | — | **HPC4046SHLG** ⑧ |
| 400 | Ringless | Lever | CSR2200 | BRH/CSR | OH/UG | 22 | 4/6 | | — | **HPC4046SHLX** ⑨ |
| **Bolt-On Socket** | | | | | | | | | | |
| 400 | Ringless | None | DK2400 | None | UG | 22 | 24/40 | Lug landings for compression | — | **HP402440B** ⑩ |
| 400 | Ringless | None | CSR2200 | BRH/CSR | UG | 22 | 24/40 | | — | **HP402440SBH** ⑥⑩ |

***Notes***

① Confirm security type for individual EUSERC utility requirements.
② Included in all of the following devices.
③ If unit needs to be semi-flush, order accessory item catalog number **HPPR** to convert **all** surface mounting devices to semi-flush mounting.
④ Reference drawing EUSERC DWG-302A, G1.
⑤ Feed-through lugs included.
⑥ For 10 kAIC, use BR or BW breakers as secondary main.
⑦ Includes manual bypass and additional ground lug to meet Nevada Power requirements.
⑧ Georgia Power approved.
⑨ Xcel approved.
⑩ Bolt-on meter socket.

## Accessories

- Top-feed gutter kit to ease top-fed installation
- Re-engineered, adjustable flush mount kit for a cleaner installation
- 100 A second main breaker kit
- New 750 kcmil box type lug kit

### Accessories

| | Description | Catalog Number |
|---|---|---|
| **HP40TFKIT** | Top feed kit to convert surface mount house panel for overhead service | **HP40TFKIT** |
| **HPBLK750** | 750 kcmil lug kit | **HPBLK750** |
| **HPBPK** | Manual bypass kit | **HPBPK** |
| **HP2NDMNKIT** 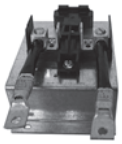 | Flushmount kit | **HPPR** |
| | 100 A 2nd main kit (Type BR branch) | **HP2NDMNKIT** |
| | 100 A 2nd main kit (Type CH branch) | **CH2NDMNKIT** |
| | 5th jaw for lever bypass house panels | **ARP00326CH** |
| | Locates 3-inch (only) incoming conduit to back of can by utilizing the 4-inch knockout useful in semi-flush applications | **HP40HUBPLATE** |

## Wiring Diagrams

### *Type CH Style House Panels*

### Type CH Wiring—Catalog Number CG403242SH

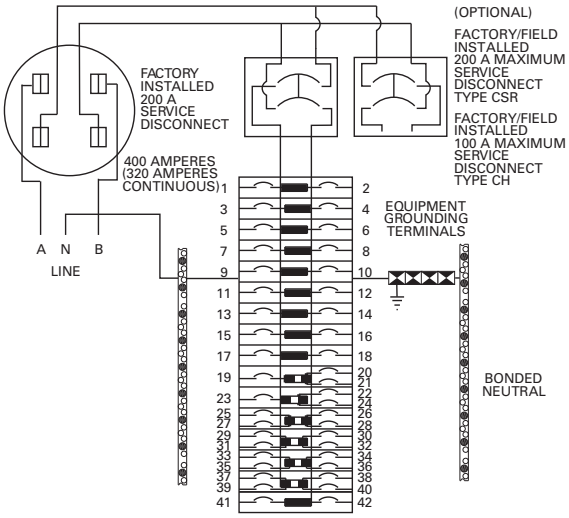


### Type CH Wiring—Catalog Number CG404242SHL

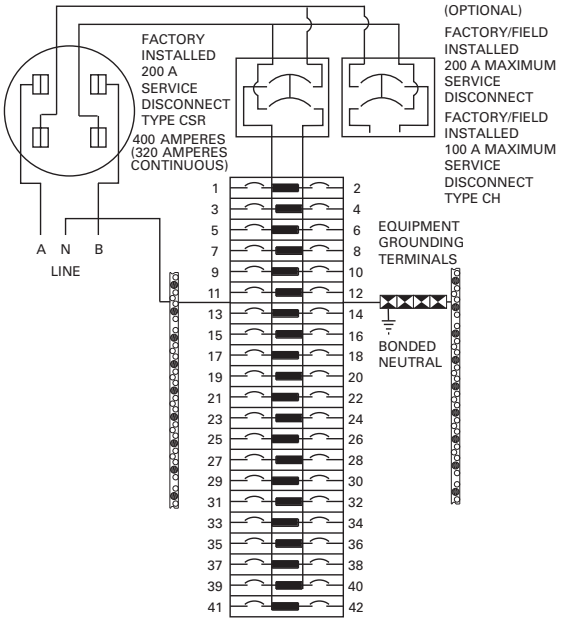


### Type CH Wiring—Catalog Number CG1212P400BS

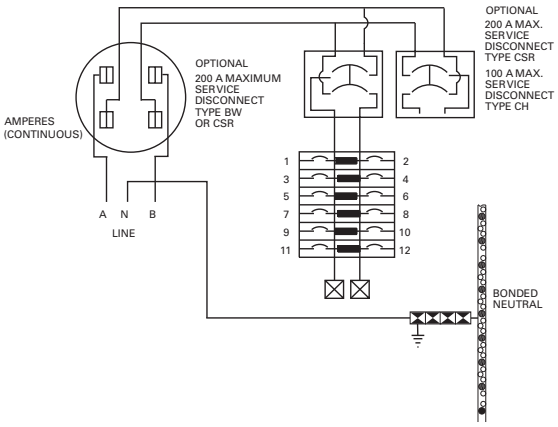


### Type CH Wiring—Catalog Number CG1212P400BSL

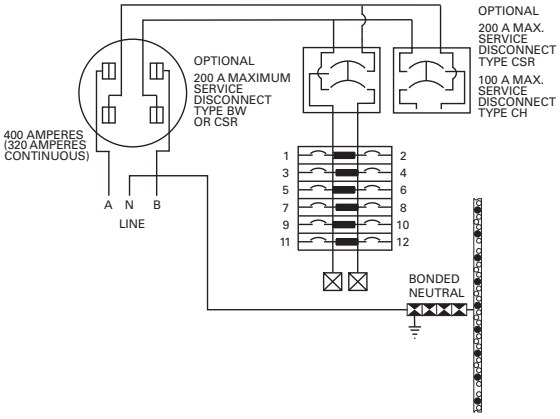


### Type CH Wiring Diagram Key

- ○ #14-6 AWG
- ● #14-1/0 AWG
- ▬ 1/0 – 300 kcmil
- ⊠ #4 AWG – 300 kcmil

***Type BR Style House Panels***

## Type BR Wiring—Catalog Number HP40

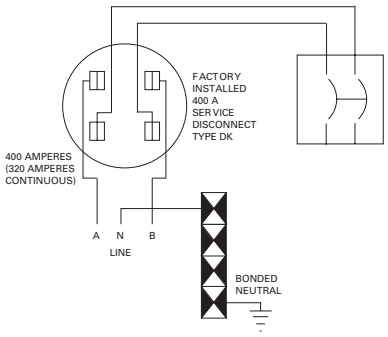


## Type BR Wiring—Catalog Number HP816P400BS

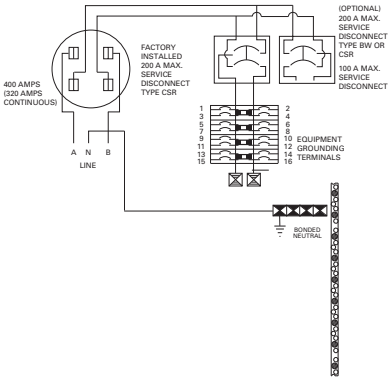


## Type BR Wiring—Catalog Number HP402440B

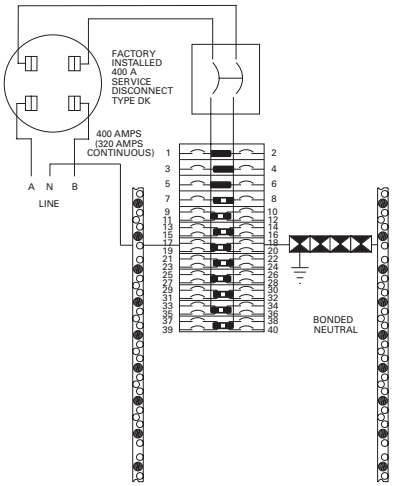


## Type BR Wiring—Catalog Number HP402440SBH

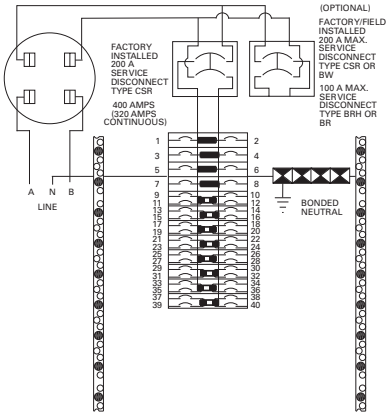


## Type BR Wiring—Catalog Number HP404040SH

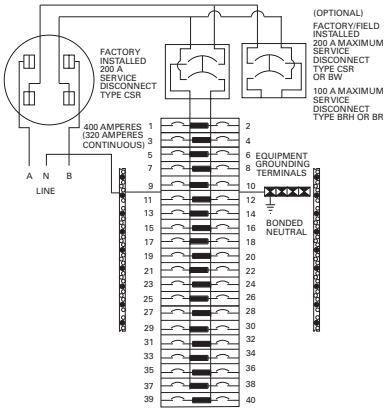


## Type BR Wiring Diagram Key

- ○ #14-6 AWG
- ● #14-1/0 AWG
- ▽ #6 AWG – 250 kcmil
- ▼ #1 AWG – 300 kcmil
- ⧗ 1/0 – 300 kcmil
- ☒ #4 AWG – 300 kcmil
- ☒ #6 AWG – 300 kcmil

## Type BR Wiring—Catalog Number HP402442

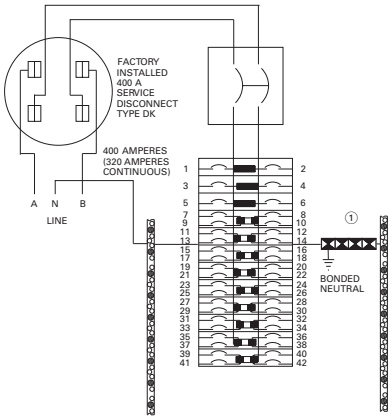


## Type BR Wiring—Catalog Number HP404040SHL

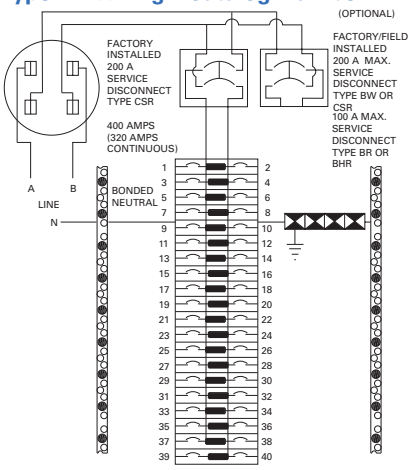


## Type BR Wiring—Catalog Number HP40SH

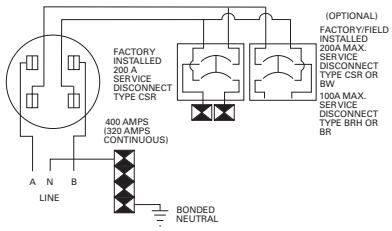


## Type BR Wiring—Catalog Number HP40SHL

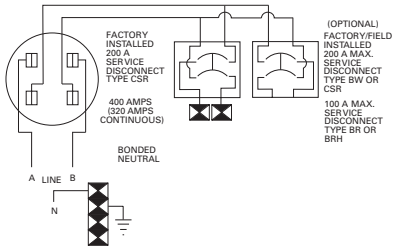


## Type BR Wiring—Catalog Number HP404040SHA

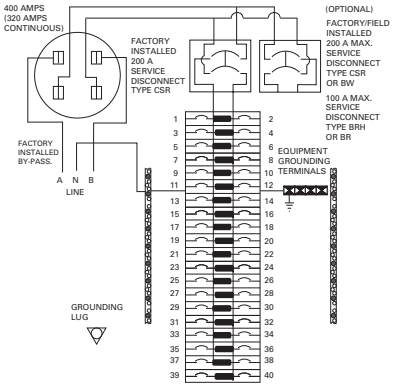


## Type BR Wiring—Catalog Number HP816P400BSL

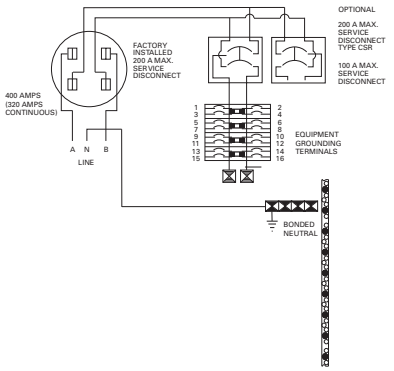


## Type BR Wiring Diagram Key

- ○ #14-6 AWG
- ● #14-1/0 AWG
- ▽ #6 AWG – 250 kcmil
- ▼ #1 AWG – 300 kcmil
- ⧗ 1/0 – 300 kcmil
- ⧗ 1/3 – 300 kcmil ①
- ⊠ #4 AWG – 300 kcmil
- ⊠ #6 AWG – 300 kcmil

### Catalog Numbers HPC40SHL and HPC30SHL

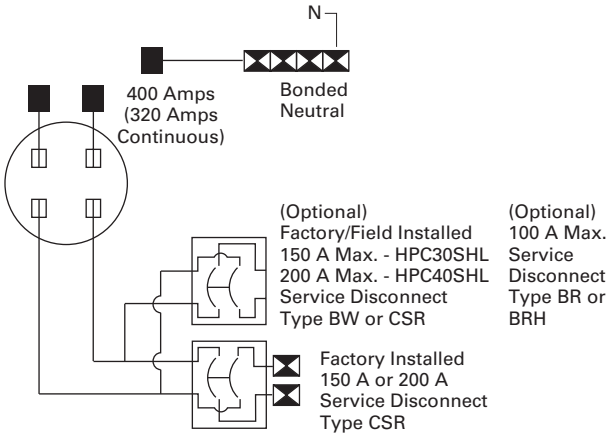


## Dimensions and Knockouts

Approximate Dimensions in Inches (mm)

### Catalog Numbers HPC40SHL and HPC30SHL

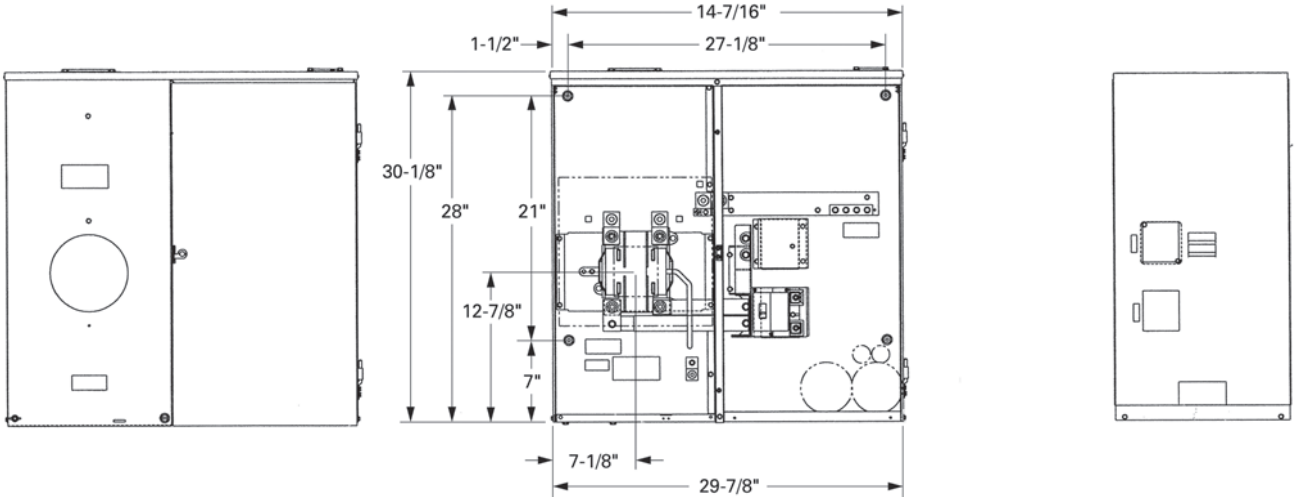


### Knockout Configurations and Dimensions for HPC40SHL and HPC30SHL

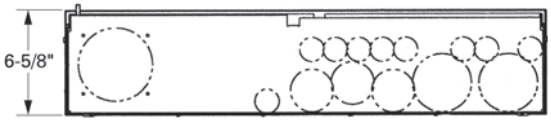

Approximate Dimensions in Inches (mm)

## House Panel Dimensions and Knockouts—For All House Panels Except Those With HPCPREFIX

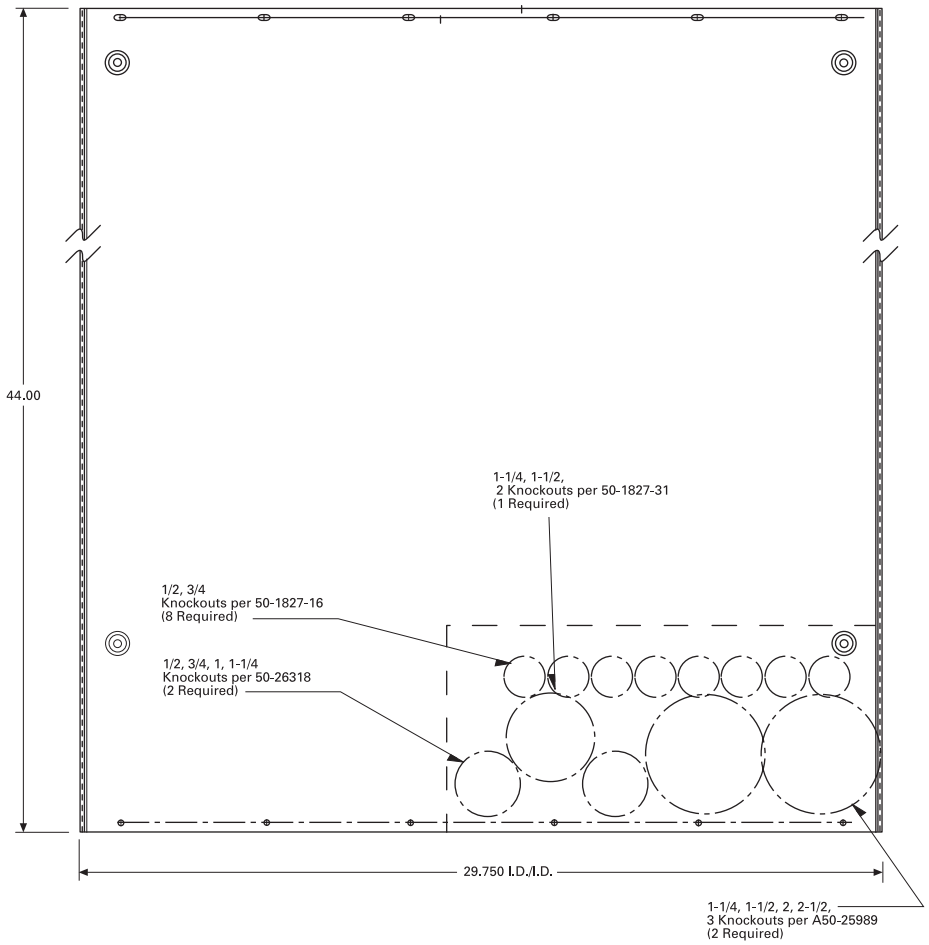


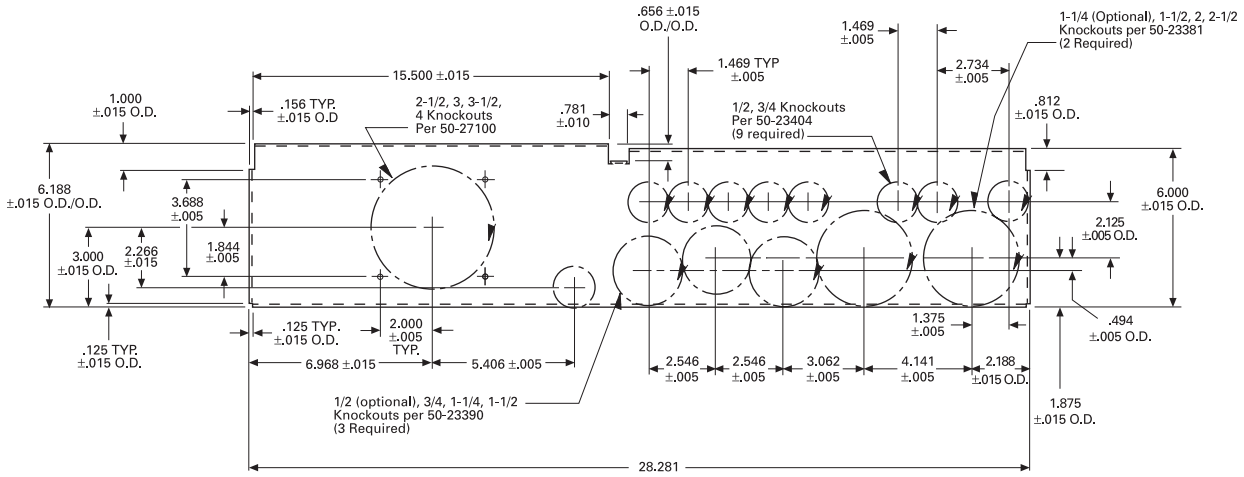

Residential Meter Breakers

## Contents


| *Description* | *Page* |
|---|---|
| Residential Meter Breakers | **V1-T4-37** |
| Non-EUSERC Combination Service Entrance Devices 100–200 A Styles | **V1-T4-39** |
| Meets EUSERC Requirements Service Entrance Devices 100–225 A. | **V1-T4-48** |
| West Coast All-In-One Design | **V1-T4-59** |
| Mechanical Interlock Cover | **V1-T4-65** |
| House Panels | **V1-T4-75** |
| Commercial Safety Sockets | |
| CH Style Renovation Solutions | **V1-T4-86** |
| Aluminum Meter Breakers | **V1-T4-87** |




## Commercial Safety Sockets

### Product Description

A Commercial Safety Socket is service entrance equipment that consists of a commercial meter socket with a test block, and may come with or without a loadcenter type distribution section.

### Application Description

Eaton's Commercial Safety Sockets are typically used where a single meter socket or single meter socket with a distribution section are needed. These areas could include a commercial business, commercial office building, individual retail facilities and signs and street lighting. Commercial Safety Sockets are typically used in EUSERC utility regions.

### Features, Benefits and Functions

***Commercial Safety Sockets with No Secondary Feeder***

- Ring type continuous duty meter socket. 600 Vac maximum, single- or three-phase
- 100 and 200 A units
- Bussed connection from meter socket to test block
- For use with self-contained watthour meter
- Conform with EUSERC standards
- NEMA 3R construction for indoor/outdoor applications
- Units can be individually mounted with provisions for hub kits and pole mounting

***Overhead Combination Units***

- NEMA 3R construction for indoor/outdoor applications
- T-fuse protection, 480 Vac maximum
- Line at top, load at bottom
- 100 and 200 A units available up to 480 Vac maximum
- Circuit breaker protection to 480 Vac maximum in 10, 22, 42 and 100 kAIC ratings
- Factory-cabled connection from test block to line side of tenant main

***Underground Combination Units***

- 100 and 200 A units
- 480 Vac maximum
- NEMA 3R construction for indoor/outdoor applications
- Underground or overhead feed
- Provisions for self-contained watthour meter
- Bussed connection from meter socket to test block
- Tenant main disconnects are available with circuit breakers up to 480 Vac maximum and T-fuse mains, 240 Vac maximum
- Load wires can exit top or bottom

## Product Selection

### *Overhead and Underground Combination Units and Individual Units*

CH127TB

### Individual Safety Sockets—600 V Maximum—No Secondary Feeder Devices ①

| Ampere Rating | No. of Jaws | AC Voltage | Service | Phase, Wire | Maximum Interrupting Rating | Wire Size | Catalog Number |
|---|---|---|---|---|---|---|---|
| 125 | 4 | 600 | OH/UG | Single-phase, three-wire | ② | #14–2/0 | **CH114TB** |
| 125 | 5 | 600 | OH/UG | Three-phase, three-wire | ② | #14–2/0 | **CH115TB** |
| 125 | 7 | 600 | OH/UG | Three-phase, four-wire | ② | #14–2/0 | **CH117TB** |
| 200 | 4 | 600 | OH/UG | Single-phase, three-wire | ② | #6–250 kcmil | **CH124TB** |
| 200 | 5 | 600 | OH/UG | Three-phase, three-wire | ② | #6–250 kcmil | **CH125TB** |
| 200 | 7 | 600 | OH/UG | Three-phase, four-wire | ② | #6–250 kcmil | **CH127TB** |

### Commercial Safety Sockets with Provision for Main Circuit Breaker ③

| Ampere Rating | No. of Jaws | AC Voltage | Service | Phase, Wire | Feeder Circuit Breaker | Maximum Interrupting Rating | Wire Size | Catalog Number |
|---|---|---|---|---|---|---|---|---|
| 125 | 4 | 240 | OH | Single-phase, three-wire | Provision ④ | ⑥ | #14–2/0 | **CH214MTBLB** |
| 125 | 7 | 208/120 | OH | Three-phase, four-wire | Provision ④ | ⑥ | #14–2/0 | **CH217MTBLB** |
| 125 | 4 | 240 | UG | Single-phase, three-wire | Provision ④ | ⑥ | #14–2/0 | **CHU214MTBLB** |
| 125 | 7 | 208/120 | UG | Three-phase, four-wire | Provision ④ | ⑥ | #14–2/0 | **CHU217MTBLB** |
| 200 | 4 | 120/240 | OH | Single-phase, three-wire | Provision ⑤ | ⑦ | #6–250 kcmil | **CH224MTBLB** |
| 200 | 7 | 208/120 | OH | Three-phase, four-wire | Provision ⑤ | ⑦ | #6–250 kcmil | **CH227MTBLB** |
| 200 | 4 | 120/240 | UG | Single-phase, three-wire | Provision ⑤ | ⑦ | #6–250 kcmil | **CHU224MTBLB** |
| 200 | 7 | 208/120 | UG | Three-phase, four-wire | Provision ⑤ | ⑦ | #6–250 kcmil | **CHU227MTBLB** |

### Commercial Safety Sockets with Main Circuit Breaker Included ③

| Ampere Rating | No. of Jaws | AC Voltage | Service | Phase, Wire | Feeder Circuit Breaker | Maximum Interrupting Rating | Wire Size | Catalog Number |
|---|---|---|---|---|---|---|---|---|
| 100 | 7 | 480/277 | OH | Three-phase, four-wire | EHD3100 | 14 kA | #14–2/0 | **CH217MTBM515** |
| 100 | 7 | 480/277 | UG | Three-phase, four-wire | EHD3100 | 14 kA | #14–2/0 | **CHU217MTBMS15** |
| 200 | 7 | 480/277 | OH | Three-phase, four-wire | JD3200 | 25 kA | #6–250 kcmil | **CH227MTBHMS15** |
| 200 | 7 | 480/277 | UG | Three-phase, four-wire | JD3200 | 25 kA | #6–250 kcmil | **CHU227MTBHMS15** |

***Notes***

① Reference drawing EUSERC DWG-305, G1.
② If being protected by a fuse, the interrupting rating of the unit is limited to the fuse AIC rating. If being protected by a single- or three-phase, 600 V breaker, the AIC is 14 kA; by a maximum 400 A, single-phase, 240 V breaker, the AIC is 18 kA; by a maximum 200 A, single- or three-phase, 240 V breaker, the AIC is 18 kA; by a maximum 125 A, single-phase, 240 V breaker, the AIC is 22 kA.
③ Reference drawing EUSERC DWG-305A, G1.
④ Order plug-on Type BR, BRH or BRHH circuit breaker separately.
⑤ Order Type CC breaker or CCH breaker separately.
⑥ Type BR = 10 kA; Type BRH = 22 kA; Type BRHH = 42 kA.
⑦ Type CCV = 10 kA; Type CCVH = 25 kA.

***Underground Combination Units and Safety Socket Accessories***

**CHU227MTBP**

## Commercial Safety Sockets with T-Fuse Switch ①

| Ampere Rating | No. of Jaws | AC Voltage | Service | Phase, Wire | Feeder Circuit Breaker | Maximum Interrupting Rating | Wire Size | |
|---|---|---|---|---|---|---|---|---|
| 100 | 4 | 120/240 | OH | Single-phase, three-wire | 200 kA | #14–2/0 | | **CH214MTBP** |
| 100 | 7 | 208/120 | OH | Three-phase, four-wire | 200 kA | #14–2/0 | | **CH217MTBP** |
| 100 | 4 | 120/240 | UG | Single-phase, three-wire | 200 kA | #14–2/0 | | **CHU214MTBP** |
| 100 | 7 | 208/120 | UG | Three-phase, four-wire | 200 kA | #14–2/0 | | **CHU217MTBP** |
| 200 | 4 | 120/240 | OH | Single-phase, three-wire | 200 kA | #6–250 kcmil | | **CH224MTBP** |
| 200 | 7 | 208/120 | OH | Three-phase, four-wire | 200 kA | #6–250 kcmil | | **CH227MTBP** |
| 200 | 4 | 120/240 | UG | Single-phase, three-wire | 200 kA | #6–250 kcmil | | **CHU224MTBP** |
| 200 | 7 | 208/120 | UG | Three-phase, four-wire | 200 kA | #6–250 kcmil | | **CHU227MTBP** |

## Hubs

| Description | Carton Weight Lbs (kg) | Catalog Number |
|---|---|---|
| Hub closure plate | 3 (1.4) | **ARP00002CHB** |
| 1.00-inch (25.4 mm) hub | 3 (1.4) | **ARP00003CH1** |
| 1.25-inch (31.8 mm) hub | 3 (1.4) | **ARP00004CH12** |
| 1.50-inch (38.1 mm) hub | 3 (1.4) | **ARP00005CH15** |
| 2.00-inch (50.8 mm) hub | 3 (1.4) | **ARP00006CH2** |
| 2.50-inch (63.5 mm) hub | 3 (1.4) | **ARP00007CH25** |

## Jaws

| Description | Part Number |
|---|---|
| 5th jaw kit | **CH50371** |

***Notes***

① Reference drawing EUSERC DWG-305A, G1.

Order Type CC or CHH breaker separately.

CH Style Renovation Solutions

## Contents


| *Description* | *Page* |
|---|---|
| Residential Meter Breakers | **V1-T4-37** |
| Non-EUSERC Combination Service Entrance Devices 100–200 A Styles | **V1-T4-39** |
| Meets EUSERC Requirements Service Entrance Devices 100–225 A. | **V1-T4-48** |
| West Coast All-In-One Design | **V1-T4-59** |
| Mechanical Interlock Cover | **V1-T4-65** |
| House Panels | **V1-T4-75** |
| Commercial Safety Sockets | **V1-T4-83** |
| CH Style Renovation Solutions Aluminum Meter Breakers | **V1-T4-87** |


## CH Style Renovation Solutions

### Product Description

- Ring style meter socket design
- Provisional main breaker or factory main breaker available
- Center top feed design
- Exit bottom or top design
- 100 A, 125 A or 200 A ratings available

### Product Selection

#### CH Style Retrofit Solutions ①

| Ampere Rating | Description | Catalog Number |
|---|---|---|
| 100 | CH, 22 circuit, provision, center top feed, exit top or bottom, flush, OH/UG | **CMBE22P100BTFR** |
| 125 | CH, 22 circuit, provision, center top feed, exit top or bottom, surface, OH/UG | **CMBE22P125BTSR** |
| 125 | CH, 22 circuit, provision, center top feed, exit top or bottom, flush, OH/UG | **CMBE22P125BTFR** |
| 200 | CH, 32/42 circuit, 200 A main breaker, center top feed, exit top or bottom, semi-flush, OH/UG | **CMBE3242B200BTS** |
| 200 | CH, 32/42 circuit, 200 A main breaker, center top feed, exit top or bottom, flush, OH/UG | **CMBE3242B200BTFR** |

***Note***

① Reference drawing EUSERC DWG-308, G1.

## Contents


| *Description* | *Page* |
|---|---|
| Residential Meter Breakers | **V1-T4-37** |
| Non-EUSERC Combination Service Entrance Devices 100–200 A Styles | **V1-T4-39** |
| Meets EUSERC Requirements Service Entrance Devices 100–225 A. | **V1-T4-48** |
| West Coast All-In-One Design | **V1-T4-59** |
| Mechanical Interlock Cover | **V1-T4-65** |
| House Panels | **V1-T4-75** |
| Commercial Safety Sockets | **V1-T4-83** |
| CH Style Renovation Solutions | **V1-T4-86** |
| Aluminum Meter Breakers | |




## Aluminum Meter Breakers

### Product Description

Eaton's Aluminum Meter Breaker enclosure and external cover offers excellent corrosion resistance in the harshest coastal environments. The meter breaker's light weight and overhead/underground design offers flexibility and ease of installation.

### Features and Benefits

- Overhead/underground design provides flexibility with wiring options
- Steel meter guides are standard, which provides a means of easy installation of the utility glass bulb meter into the meter's jaws
- Main Lug Only design includes six two-pole breaker locations, which complies with National Electrical Code 225.33 (maximum number of disconnects)
- Distribution section accepts BR branch breakers
- Single-phase, three-wire 120/240 Vac applications
- Hub closure plate is provided, attached to the top of the device
- Optional fifth jaw can be applied to 3 o'clock or 9 o'clock meter socket position
- 10-year warranty
- For customer support, contact Eaton's Technical Resource Center at 1-877-ETN-CARE
- For additional information or to place an order, contact your local Eaton representative or visit us at www.eaton.com

### Catalog Number Selection

#### Meter Breakers

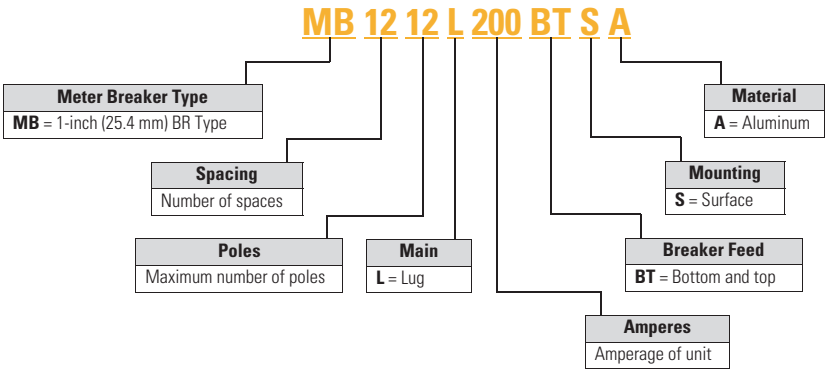

**Systems for Residential and Commercial Application**

## Contents


| *Description* | *Page* |
|---|---|
| Systems for Residential and Commercial Applications | |
| Meter Packs | **V1-T4-90** |
| Type CCV 120/240 V Tenant Main Circuit Breaker | **V1-T4-95** |
| Type CV 120/240 V Tenant Main Circuit Breaker | **V1-T4-96** |
| Meter Packs—1MP, 1MM and 3MM Main Tenant Circuit Breakers | **V1-T4-98** |
| Main Service Modules | **V1-T4-101** |
| Surge Metering | **V1-T4-115** |
| Group Metering Inline Current Transformer Cabinets | **V1-T4-116** |
| Residential Meter Stacks | **V1-T4-118** |
| 1MP, 1MM and 3MM Main Tenant Circuit Breakers | **V1-T4-127** |
| Phase Balanced Stack | **V1-T4-128** |
| Commercial Meter Stack Modules | **V1-T4-129** |
| 35MM, 37MM, 35SS and 37SS Main Tenant Circuit Breakers | **V1-T4-136** |


## Systems for Residential and Commercial Applications

### Product Description

Group metering is a service entrance product line that consists of a main device and multiple meter sockets in one enclosure or several connected enclosures. Group metering allows the customer to install a multiple tenant-metering device in one location while providing a space and installation cost savings.

### Application Description

Eaton's Electrical Sector offers two group metering designs—Meter Packs and Gangable Metering. Meter Packs, also called All-in-Ones, consist of main lugs and up to six meter sockets in one enclosure. Meter Packs are supplied as one complete unit and the user cannot "add" additional meter sockets to the unit in the future. The most common application for Meter Packs is garden apartments, small condominiums and townhouses where six or less units are metered through one centrally located Meter Pack.

***Gangable Metering (Main Service Modules and Meter Stacks)***

The second type of group metering is Gangable Metering, which consists of a Main Service Module used in conjunction with a Meter Stack to make a custom metering lineup. The Main Service Module can be main lug, main circuit breaker, main fusible switch or bolted pressure switch. The Meter Stack is offered with various meter sockets and bus ratings. This type of custom lineup allows the owner to add/remove meter sockets and main devices to meet future need. Gangable Metering is often used in large condominiums, strip malls and light commercial applications where more than six units are metered, or there will be a future need to add more units.

## Features, Benefits and Functions

### *Clip-Tight™ Socket*

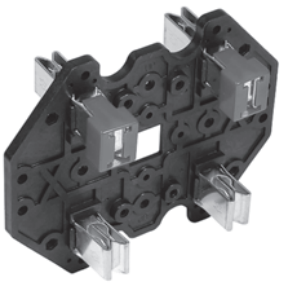

***Clip-Tight Socket***

Eaton's series of 1MP, 1MM, 3MM metering devices incorporate the only socket base in the industry without fasteners. This component uses jaws on both sides of a thermoplastic polyester glass fiber reinforced (PBT) base, eliminating the need for self-tapping screw connections to vertical busbars.

### *Field Phase Balancing*

***Field Phase Balancing***

Due to popular incoming three-phase voltage systems and single-phase outgoing loads, installers have the option to field phase balance on the individual stack (A-B, B-C, A-C). This feature eliminates the chance of installing an incorrectly phased device due to its versatility.

### *Lever Bypass*

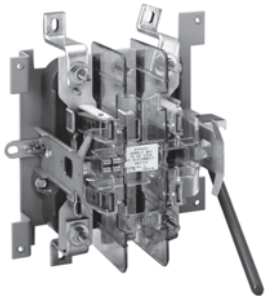

***Lever Bypass***

Due to commercial requirements, Eaton offers a lever bypass (as standard) on all 35MM and 37MM devices. Each socket base consists of a lever bypass, which also releases the jaws (when lever is engaged in bypass position), enabling utility company mechanics to easily remove and/or insert utility meter.

### *Main Tenant Breaker Cover*

***Main Tenant Breaker Cover***

Each tenant circuit breaker is protected by a lockable raintight cover that secures the breaker against unauthorized operation. The tenant breaker cover is a high impact plastic to resist wear, rusting and corrosion.

### *One-Piece Vertical Busbar*

***One-Piece Vertical Busbar***

Eaton's series of 1MP, 1MM, 3MM meter stacks embody a one-piece busbar construction to each socket, as well as a one-piece cross bus to each tenant main. Because the Eaton design uses the Clip-Tight meter socket and does not have busbar joints, the chance of hot spots occurring is virtually eliminated.

### *Horn and Manual Bypass*

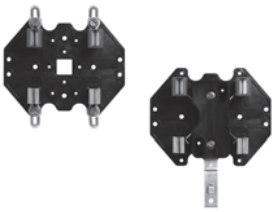

***Horn and Manual Bypass***

With an increasing demand for uninterrupted power, Eaton's series of 1MP, 1MM and 3MM meter sockets offer horn (ringless style) and manual (ring style) field-installable bypass accessories. These accessories provide uninterrupted tenant service if a meter is pulled for inspection or replacement.

### *Test Bypass Disconnects*

***Test Bypass Disconnects***

Eaton also provides commercial meter stacks with EUSERC required test-bypass disconnects (35SS and 37SS). This bypass is used in the same applications as the lever bypass and it is required by EUSERC utilities.

### *Mounting Features*

***Mounting Features***

A standard mounting rail and factory-installed swing away feet speed up and simplify installation.

## Standards and Certifications

- UL listed

Listed

Meter Pack

## Contents


| *Description* | *Page* |
|---|---|
| Systems for Residential and Commercial Applications | **V1-T4-88** |
| Meter Packs | |
| Type CCV 120/240 V Tenant Main Circuit Breaker | **V1-T4-95** |
| Type CV 120/240 V Tenant Main Circuit Breaker | **V1-T4-96** |
| Meter Packs—1MP, 1MM and 3MM Main Tenant Circuit Breakers | **V1-T4-98** |
| Main Service Modules | **V1-T4-101** |
| Surge Metering | **V1-T4-115** |
| Group Metering Inline Current Transformer Cabinets | **V1-T4-116** |
| Residential Meter Stacks | **V1-T4-118** |
| 1MP, 1MM and 3MM Main Tenant Circuit Breakers | **V1-T4-127** |
| Phase Balanced Stack | **V1-T4-128** |
| Commercial Meter Stack Modules | **V1-T4-129** |
| 35MM, 37MM, 35SS and 37SS Main Tenant Circuit Breakers | **V1-T4-136** |


## Meter Packs

### Product Overview

- Eaton's 1MP units are self-contained (main terminal box included) for installations requiring up to six meter socket positions in a single enclosure
- Units are not gangable with any other metering device
- Approved by major power companies, UL listed, suitable as service equipment and meet the service and electrical requirements of EUSERC and CECHA
- Series rating up to 100 kAIC
- All ringless cover devices include fifth jaw as standard
- Ring type devices do not include fifth jaw as standard. Order 1MM5JK if needed
- Bondable neutral
- 120/240 Vac, single-phase three-wire metering device
- Up to 600 A maximum horizontal bus rating
- Incoming lugs not included (phase A, phase B and neutral)
- Indoor/outdoor construction
- Provision for two-pole breaker (plug-on type for 125 A sockets and bolt-on type for 200 A sockets)—circuit breakers not included
- Underground incoming feed
- Aluminum or copper bus

## Catalog Number Selection

**1 MP 4 12 4 R C**

**Single-Phase**

**Type of Metering**
**MP** = Meter pack

**Number of Meters**
**2, 3, 4, 5 or 6**
**Blank** = Accessory

**Ampere Rating**
**12** = 125 A
**20** = 200 A
**Blank** = Accessory

**Bus Ampere Rating**
**2** = 200 A
**4** = 400 A
**6** = 600 A
**Blank** = Accessory

**Security or Accessory Code**
**R**= Ring
**RRL** = Ringless
**RRLB** = Ringless with horn bypass
**LK** = Lug kit (accessory)
**SC** = Crimp lug landing pad kit (accessory)

**Bus Material**
**C** = Copper bus
**Blank** = Aluminum bus

### When Ordering:

1. Determine catalog number of the basic device.
2. Include Lug Kit for incoming section. See **Page V1-T4-94**.
3. Find quantity and catalog numbers for tenant circuit breakers. (Order one breaker per socket.) See **Page V1-T4-94**.
4. Select required accessories. See **Page V1-T4-138**.

## Product Selection

### *Meter Packs*

### Aluminum Bus—Main Lugs Not Included—See Page V1-T4-94



| Socket Ampere Rating | Number of Meter Sockets | Bus Ampere Rating | Main Tenant Breaker Type (See Page V1-T4-94) | Catalog Number | Semi-Flush Flange Kit Catalog Number |
|---|---|---|---|---|---|
| **Ring Style Meter Socket Covers** ①② | | | | | |
| 125 ③ | 2 ⑤ | 200 | Plug-on type BR2_ BRH2_ BRHH2_ BRX2_ | **1MP2122R** ⑥⑨ | **1MPSFK1** |
| 125 ③ | 3 | 400 | | **1MP3124R** ⑦ | **1MPSFK2** |
| 125 ③ | 4 | 400 | | **1MP4124R** ⑦ | **1MPSFK2** |
| 125 ③ | 5 ⑤ | 600 | | **1MP5126R** ⑦ | **1MPSFK3** |
| 125 ③ | 6 ⑤ | 600 | | **1MP6126R** ⑦ | **1MPSFK3** |
| 200 ④ | 2 | 400 | Bolt-on type CCV2_X CCVH2_X CVS2_XMM CV2_XMM CVH2_XMM | **1MP2204R** ⑦ | **1MPSFK4** |
| 200 ④ | 3 | 600 | | **1MP3206R** ⑦ | **1MPSFK5** |
| 200 ④ | 4 | 600 | | **1MP4206R** ⑦ | **1MPSFK5** |
| 200 ④ | 5 | 600 | | **1MP5206R** ⑦ | **1MPSFK6** |
| 200 ④ | 6 | 600 | | **1MP6206R** ⑦ | **1MPSFK6** |
| **Ringless Style Meter Socket Covers** ⑧ | | | | | |
| 125 | 2 | 200 | Plug-on type BR2_ BRH2_ BRHH2_ BRX2_ | **1MP2122RRL** ⑥⑨ | **1MPSFK1** |
| 125 | 3 | 400 | | **1MP3124RRL** ⑦ | **1MPSFK2** |
| 125 | 4 | 400 | | **1MP4124RRL** ⑦ | **1MPSFK2** |
| 125 | 5 | 600 | | **1MP5126RRL** ⑦ | **1MPSFK3** |
| 125 | 6 | 600 | | **1MP6126RRL** ⑦ | **1MPSFK3** |
| 200 | 2 | 400 | Bolt-on type CCV2_X CCVH2_X CVS2_XMM CV2_XMM CVH2_XMM | **1MP2204RRL** ⑦ | **1MPSFK4** |
| 200 | 3 | 600 | | **1MP3206RRL** ⑦ | **1MPSFK5** |
| 200 | 4 | 600 | | **1MP4206RRL** ⑦ | **1MPSFK5** |
| 200 | 5 | 600 | | **1MP5206RRL** ⑦ | **1MPSFK6** |
| 200 | 6 | 600 | | **1MP6206RRL** ⑦ | **1MPSFK6** |
| **Ringless Style Covers with Horn Bypass** ⑧ | | | | | |
| 125 | 2 | 200 | Plug-on type BR2_ BRH2_ BRHH2_ BRX2_ | **1MP2122RRLB** ⑥⑨ | **1MPSFK1** |
| 125 | 3 | 400 | | **1MP3124RRLB** ⑦⑩ | **1MPSFK2** |
| 125 | 4 | 400 | | **1MP4124RRLB** ⑦⑩ | **1MPSFK2** |
| 125 | 5 | 600 | | **1MP5126RRLB** ⑦⑩ | **1MPSFK3** |
| 125 | 6 | 600 | | **1MP6126RRLB** ⑦⑩ | **1MPSFK3** |
| 200 | 2 | 400 | Bolt-on type CCV2_X CCVH2_X CVS2_XMM CV2_XMM CVH2_XMM | **1MP2204RRLB** ⑦⑩ | **1MPSFK4** |
| 200 | 3 | 600 | | **1MP3206RRLB** ⑦⑩ | **1MPSFK5** |
| 200 | 4 | 600 | | **1MP4206RRLB** ⑦⑩ | **1MPSFK5** |
| 200 | 5 | 600 | | **1MP5206RRLB** ⑦⑩ | **1MPSFK6** |
| 200 | 6 | 600 | | **1MP6206RRLB** ⑦⑩ | **1MPSFK6** |

***Notes***

① Ring Style Meter Packs do not come with fifth jaw. Order **1MM5JK** if needed.
② Reference drawing EUSERC DWG-342, G1.
③ To change in field from ring to ringless—order **1MMRC125**.
④ To change in field from ring to ringless—order **1MMRC200**.
⑤ To change from ring to ringless covers, the top socket only in 2, 5 and 6 socket designs—order **1MMRC125T**. Top socket only.
⑥ Main lugs included. #6–300 kcmil. (Optional lugs are not available.)
⑦ For overhead use, order DS_H2 type hub.
⑧ Fifth jaw factory installed at 9 o'clock position.
⑨ For overhead use, order DS type hub.
⑩ To order with raceway provision in bottom endwall, add "T" suffix to the catalog number. Trough accessory catalog number is **1008934CH**.

See **Page V1-T4-94** for Main Lug Kit selection and Wire Sizes.

## Copper Bus—Main Lugs Not Included—See Page V1-T4-94

| Socket Ampere Rating | Number of Meter Sockets | Bus Ampere Rating | Main Tenant Breaker Type (See Page V1-T4-94) | Catalog Number | Semi-Flush Flange Kit Catalog Number |
|---|---|---|---|---|---|
| **Ring Style Meter Socket Covers** ①② | | | | | |
| 125 ③ | 2 ⑤ | 200 | Plug-on type BR2_ BRH2_ BRHH2_ BRX2_ | **1MP2122RC** ⑦ | **1MPSFK1** |
| 125 ③ | 3 | 400 | | **1MP3124RC** ⑧ | **1MPSFK2** |
| 125 ③ | 4 | 400 | | **1MP4124RC** ⑧ | **1MPSFK2** |
| 125 ③ | 5 ⑤ | 600 | | **1MP5126RC** ⑧ | **1MPSFK3** |
| 125 ③ | 6 ⑤ | 600 | | **1MP6126RC** ⑧ | **1MPSFK3** |
| 200 ④ | 2 | 400 | Bolt-on type CCV2_X CCVH2_X CVS2_XMM CV2_XMM CVH2_XMM | **1MP2204RC** ⑧ | **1MPSFK4** |
| 200 ④ | 3 | 600 | | **1MP3206RC** ⑧ | **1MPSFK5** |
| 200 ④ | 4 | 600 | | **1MP4206RC** ⑧ | **1MPSFK5** |
| 200 ④ | 5 | 600 | | **1MP5206RC** ⑧ | **1MPSFK6** |
| 200 ④ | 6 | 600 | | **1MP6206RC** ⑧ | **1MPSFK6** |
| **Ringless Style Meter Socket Covers** ⑥ | | | | | |
| 125 | 2 | 200 | Plug-on type BR2_ BRH2_ BRHH2_ BRX2_ | **1MP2122RRLC** ⑧ | **1MPSFK1** |
| 125 | 3 | 400 | | **1MP3124RRLC** ⑧ | **1MPSFK2** |
| 125 | 4 | 400 | | **1MP4124RRLC** ⑧ | **1MPSFK2** |
| 125 | 5 | 600 | | **1MP5126RRLC** ⑧ | **1MPSFK3** |
| 125 | 6 | 600 | | **1MP6126RRLC** ⑧ | **1MPSFK3** |
| 200 | 2 | 400 | Bolt-on type CCV2_X CCVH2_X CVS2_XMM CV2_XMM CVH2_XMM | **1MP2204RRLC** ⑧ | **1MPSFK4** |
| 200 | 3 | 600 | | **1MP3206RRLC** ⑧ | **1MPSFK5** |
| 200 | 4 | 600 | | **1MP4206RRLC** ⑧ | **1MPSFK5** |
| 200 | 5 | 600 | | **1MP5206RRLC** ⑧ | **1MPSFK6** |
| 200 | 6 | 600 | | **1MP6206RRLC** ⑧ | **1MPSFK6** |
| **Ringless Style Covers with Horn Bypass** ⑥ | | | | | |
| 125 | 2 | 200 | Plug-on type BR2_ BRH2_ BRHH2_ BRX2_ | **1MP2122RRLBC** ⑧ | **1MPSFK1** |
| 125 | 3 | 400 | | **1MP3124RRLBC** ⑧ | **1MPSFK2** |
| 125 | 4 | 400 | | **1MP4124RRLBC** ⑧ | **1MPSFK2** |
| 125 | 5 | 600 | | **1MP5126RRLBC** ⑧ | **1MPSFK3** |
| 125 | 6 | 600 | | **1MP6126RRLBC** ⑧ | **1MPSFK3** |
| 200 | 2 | 400 | Bolt-on type CCV2_X CCVH2_X CVS2_XMM CV2_XMM CVH2_XMM | **1MP2204RRLBC** ⑧ | **1MPSFK4** |
| 200 | 3 | 600 | | **1MP3206RRLBC** ⑧ | **1MPSFK5** |
| 200 | 4 | 600 | | **1MP4206RRLBC** ⑧ | **1MPSFK5** |
| 200 | 5 | 600 | | **1MP5206RRLBC** ⑧ | **1MPSFK6** |
| 200 | 6 | 600 | | **1MP6206RRLBC** ⑧ | **1MPSFK6** |

***Notes***

① Ring Style Meter Packs do not come with fifth jaw. Order **1MM5JK** if needed.
② Reference drawing EUSERC DWG-342, G1.
③ To change in field from ring to ringless—order **1MMRC125**.
④ To change in field from ring to ringless—order **1MMRC200**.
⑤ To change in field from ring to ringless covers, the top socket only in 5 to 6 socket design—order **1MMRC125T**. Top socket only—other sockets see ③.
⑥ Fifth jaw factory installed at 9 o'clock position.
⑦ For overhead use, order DS_H2 type hub.
⑧ For overhead use, order DS_MH type hub.

**1MPLK3**

## Main Lug Selection—Field-Installed Lugs for 400 or 600 A Main Bus

| Line Lug and Wire Sizes Order Separately and Field Install | Line Lug Kit Catalog Number Order Three Kits (For Two Lines and Neutral) |
|---|---|
| (1) #6–600 kcmil or (2) 2/0–250 kcmil | **1MPLK1** |
| (2) 250–500 kcmil | **1MPLK3** |
| (3) #4–300 kcmil | **1MPLK4** ① |
| (1) 750 kcmil | **1MPLK2** ② |
| Crimp lug landing pad 250–750 kcmil | **1MPSC1** ① |

## Wire Sizes—Neutral and Ground Lugs

| Description | Wire Size, Al/Cu | Catalog Number |
|---|---|---|
| Neutral—125 A meter pack | #6–2/0 | — |
| Neutral—200 A meter pack | #1/0–300 kcmil | — |
| Equipment ground bar—125 A meter pack | #14–#2 | — |
| Equipment ground bar—200 A meter pack | #14–2/0 | — |
| Optional ground bar | #6–2/0 | **1MMGBK** |

***Notes***

① This kit comes with three pads for two lines and neutral. Each pad will accept one or two crimp lugs. Cannot be used on **1MP2122R**, **RL, RC** and **RLB** EUSERC underground termination.

② This lug is not UL listed.

Each stack includes a neutral and ground bar. If an extra ground bar is needed, order **1MMGBK**.

Type CCV Tenant Main Circuit Breaker

## Contents


| *Description* | *Page* |
|---|---|
| Systems for Residential and Commercial Applications | **V1-T4-88** |
| Meter Packs | **V1-T4-90** |
| Type CCV 120/240 V Tenant Main Circuit Breaker | |
| Type CV 120/240 V Tenant Main Circuit Breaker | **V1-T4-96** |
| Meter Packs—1MP, 1MM and 3MM Main Tenant Circuit Breakers | **V1-T4-98** |
| Main Service Modules | **V1-T4-101** |
| Surge Metering | **V1-T4-115** |
| Group Metering Inline Current Transformer Cabinets | **V1-T4-116** |
| Residential Meter Stacks | **V1-T4-118** |
| 1MP, 1MM and 3MM Main Tenant Circuit Breakers | **V1-T4-127** |
| Phase Balanced Stack | **V1-T4-128** |
| Commercial Meter Stack Modules | **V1-T4-129** |
| 35MM, 37MM, 35SS and 37SS Main Tenant Circuit Breakers | **V1-T4-136** |




## Type CCV 120/240 V Tenant Main Circuit Breaker

### Product Overview

Eaton offers Type CCV (10 and 22 kAIC) and Type CV (42, 65 and 100 kAIC) family of circuit breakers as the primary tenant main breakers used in most group metering applications.

### Product Description

Eaton's residential products Type CCV circuit breaker is available in two-pole configurations from 100 A to 225 A in 10 and 22 kAIC ratings.

### Features

- **Ratings**—120/240 Vac, two-pole, through 225 continuous amperes, calibrated at 40 °C
- **Tripping characteristics**—thermal-magnetic trip, calibrated and sealed after assembly. Indirectly heated thermal tripping bimetal elements
- **Interrupting capacity** at 120/240 Vac. Type CCV—10 kAIC rms symmetrical. Type CCVH—25 kAIC rms symmetrical
- **Handles**—trip-free with ON-TRIPPED-OFF positions. Reset past OFF is required to latch breaker contacts after tripping
- **Terminals**—standard lugs (wire connectors) suitable for copper or aluminum wire
- **Backward compatibility**—Type CCV and CCVH retains same profile and footprint as the CC and CCH breaker, allowing use in the same applications

### Standards and Certifications

- Complies with UL Standard 489. Breakers are listed under UL File #E7819

UL Listed

### Product Selection

#### Type CCV 120/240 V Tenant Main Circuit Breaker

| Ampere Rating | Two-Pole Breaker Wire Size Range, Al/Cu | 10 kAIC | 25 kAIC |
|---|---|---|---|
| 60 | #4–4/0 | **CCV2060X** | **CCVH2060X** |
| 70 | | **CCV2070X** | **CCVH2070X** |
| 80 | | **CCV2080X** | **CCVH2080X** |
| 90 | | **CCV2090X** | **CCVH2090X** |
| 100 | #2–300 kcmil | **CCV2100X** | **CCVH2100X** |
| 125 | | **CCV2125X** | **CCVH2125X** |
| 150 | | **CCV2150X** | **CCVH2150X** |
| 175 | | **CCV2175X** | **CCVH2175X** |
| 200 | | **CCV2200X** | **CCVH2200X** |
| 225 | | **CCV2225X** | **CCVH2225X** |

***Modification Codes***

- X—load side terminals only

**Type CV Tenant Main Circuit Breaker**

## Contents


| *Description* | *Page* |
|---|---|
| Systems for Residential and Commercial Applications | **V1-T4-88** |
| Meter Packs | **V1-T4-90** |
| Type CCV 120/240 V Tenant Main Circuit Breaker | **V1-T4-95** |
| Type CV 120/240 V Tenant Main Circuit Breaker | **V1-T4-96** |
| Meter Packs—1MP, 1MM and 3MM Main Tenant Circuit Breakers | **V1-T4-98** |
| Main Service Modules | **V1-T4-101** |
| Surge Metering | **V1-T4-115** |
| Group Metering Inline Current Transformer Cabinets | **V1-T4-116** |
| Residential Meter Stacks | **V1-T4-118** |
| 1MP, 1MM and 3MM Main Tenant Circuit Breakers | **V1-T4-127** |
| Phase Balanced Stack | **V1-T4-128** |
| Commercial Meter Stack Modules | **V1-T4-129** |
| 35MM, 37MM, 35SS and 37SS Main Tenant Circuit Breakers | **V1-T4-136** |


## Type CV 120/240 V Tenant Main Circuit Breaker

### Product Overview

Eaton offers Type CCV (10 and 22 kAIC) and Type CV (42, 65 and 100 kAIC) family of circuit breakers as the primary tenant main breakers used in most group metering applications.

### Product Description

Eaton's residential products Type CV molded-case circuit breaker is available in two- and three-pole configurations from 60 A to 225 A in 42, 65 and 100 kAIC ratings.

### Features

- **Ratings**—120/240 Vac, two- and three-pole, through 225 continuous amperes, calibrated at 40 °C
- **Tripping characteristics**—thermal-magnetic trip, calibrated and sealed after assembly. Indirectly heated thermal tripping bimetal elements; includes push-to-test button for routine preventive maintenance
- **Interrupting capacity** at 120/240 Vac
  - Type CVS—42,000 A rms symmetrical
  - Type CV—65,000 A rms symmetrical
  - Type CVH—100,000 A rms symmetrical
- **Handles**—trip-free with ON-TRIPPED-OFF positions. Reset past OFF is required to latch breaker contacts after tripping
- **Terminals**—standard lugs (wire connectors) suitable for copper or aluminum wire

### Standards and Certifications

- Complies with UL Standard 489. Breakers are listed under UL File #E7819

Listed

## Product Selection

### Type CV Two-Pole Tenant Main Circuit Breakers

| Number of Poles | Main Tenant Circuit Breaker Ampere Rating | Wire Size Range, Al/Cu | 42 kAIC Catalog Number | 65 kAIC Catalog Number | 100 kAIC Catalog Number |
|---|---|---|---|---|---|
| 2 | 60 | #6–4/0 | **CVS2060XMM** | **CV2060XMM** | **CVH2060XMM** |
| | 70 | | **CVS2070XMM** | **CV2070XMM** | **CVH2070XMM** |
| | 80 | | **CVS2080XMM** | **CV2080XMM** | **CVH2080XMM** |
| | 90 | | **CVS2090XMM** | **CV2090XMM** | **CVH2090XMM** |
| | 100 | | **CVS2100XMM** | **CV2100XMM** | **CVH2100XMM** |
| | 125 | | **CVS2125XMM** | **CV2125XMM** | **CVH2125XMM** |
| | 150 | | **CVS2150XMM** | **CV2150XMM** | **CVH2150XMM** |
| | 175 | | **CVS2175XMM** | **CV2175XMM** | **CVH2175XMM** |
| | 200 | | **CVS2200XMM** | **CV2200XMM** | **CVH2200XMM** |
| | 225 | | **CVS2225XMM** | **CV2225XMM** | **CVH2225XMM** |

### Type CV Three-Pole Tenant Main Circuit Breakers

| Number of Poles | Main Tenant Circuit Breaker Ampere Rating | Wire Size Range, Al/Cu | 42 kAIC Catalog Number | 65 kAIC Catalog Number | 100 kAIC Catalog Number |
|---|---|---|---|---|---|
| 3 | 60 | #6–4/0 | **CVS3060X** | **CV3060X** | **CVH3060X** |
| | 70 | | **CVS3070X** | **CV3070X** | **CVH3070X** |
| | 80 | | **CVS3080X** | **CV3080X** | **CVH3080X** |
| | 90 | | **CVS3090X** | **CV3090X** | **CVH3090X** |
| | 100 | | **CVS3100X** | **CV3100X** | **CVH3100X** |
| | 125 | | **CVS3125X** | **CV3125X** | **CVH3125X** |
| | 150 | | **CVS3150X** | **CV3150X** | **CVH3150X** |
| | 175 | | **CVS3175X** | **CV3175X** | **CVH3175X** |
| | 200 | | **CVS3200X** | **CV3200X** | **CVH3200X** |
| | 225 | | **CVS3225X** | **CV3225X** | **CVH3225X** |

## Accessories

Field Installable

| Description | Catalog Number |
|---|---|
| Two-pole 300 kcmil with terminal shield | **2TA225CVK** |
| Three-pole 300 kcmil with terminal shield | **3TA225CVK** |
| Replacement mounting hardware kit for 200 A 1MP, 1MM and 3MM units | **1MMCBK** |

**Main Tenant Circuit Breakers**

## Contents


| *Description* | *Page* |
|---|---|
| Systems for Residential and Commercial Applications | **V1-T4-88** |
| Meter Packs | **V1-T4-90** |
| Type CCV 120/240 V Tenant Main Circuit Breaker | **V1-T4-95** |
| Type CV 120/240 V Tenant Main Circuit Breaker | **V1-T4-96** |
| Meter Packs—1MP, 1MM and 3MM Main Tenant Circuit Breakers | |
| Main Service Modules | **V1-T4-101** |
| Surge Metering | **V1-T4-115** |
| Group Metering Inline Current Transformer Cabinets | **V1-T4-116** |
| Residential Meter Stacks | **V1-T4-118** |
| 1MP, 1MM and 3MM Main Tenant Circuit Breakers | **V1-T4-127** |
| Phase Balanced Stack | **V1-T4-128** |
| Commercial Meter Stack Modules | **V1-T4-129** |
| 35MM, 37MM, 35SS and 37SS Main Tenant Circuit Breakers | **V1-T4-136** |


## Meter Packs—1MP, 1MM and 3MM Main Tenant Circuit Breakers

### Product Description

Specific main tenant circuit breakers that are to be used in meter packs (1MP), residential meter stacks (1MM) and three-phase in single-phase out meter stacks (3MM).

### Product Selection

| Description | Number of Poles | Main Tenant Circuit Breaker Ampere Rating | 10 kAIC Catalog Number ① | 22 kAIC Catalog Number | 25 kAIC Catalog Number ①②③④ | 42 kAIC Catalog Number ②③④ | 65 kAIC Catalog Number ②③④ | 100 kAIC Catalog Number ②③④ |
|---|---|---|---|---|---|---|---|---|
| **Plug-On Type** | | | | | | | | |
| Plug-on type circuit breakers used with 1MP, 1MM, and 3MM 125 A modular metering stacks | 2 | 60 | **BR260** | **BRH260** | — | **BRHH260** | **BRX260** | — |
| | 2 | 70 | **BR270** | **BRH270** | — | **BRHH270** | **BRX270** | — |
| | 2 | 80 | **BR280** | **BRH280** | — | **BRHH280** | **BRX280** | — |
| | 2 | 90 | **BR290** | **BRH290** | — | **BRHH290** | **BRX290** | — |
| | 2 | 100 | **BR2100** | **BRH2100** | — | **BRHH2100** | **BRX2100** | — |
| | 2 | 110 | **BR2110** | **BRH2110** | — | **BRHH2110** | **BRX2110** | — |
| | 2 | 125 | **BR2125** | **BRH2125** | — | **BRHH2125** | **BRX2125** | — |
| **Bolt-On Type** | | | | | | | | |
| Bolt-on type circuit breakers used with 1MP, 1MM, and 3MM 200 A modular metering stacks | 2 | 60 | **CCV2060X** | — | **CCVH2060X** | **CVS2060XMM** | **CV2060XMM** | **CVH2060XMM** |
| | 2 | 70 | **CCV2070X** | — | **CCVH2070X** | **CVS2070XMM** | **CV2070XMM** | **CVH2070XMM** |
| | 2 | 80 | **CCV2080X** | — | **CCVH2080X** | **CVS2080XMM** | **CV2080XMM** | **CVH2080XMM** |
| | 2 | 90 | **CCV2090X** | — | **CCVH2090X** | **CVS2090XMM** | **CV2090XMM** | **CVH2090XMM** |
| | 2 | 100 | **CCV2100X** | — | **CCVH2100X** | **CVS2100XMM** | **CV2100XMM** | **CVH2100XMM** |
| | 2 | 125 | **CCV2125X** | — | **CCVH2125X** | **CVS2125XMM** | **CV2125XMM** | **CVH2125XMM** |
| | 2 | 150 | **CCV2150X** | — | **CCVH2150X** | **CVS2150XMM** | **CV2150XMM** | **CVH2150XMM** |
| | 2 | 175 | **CCV2175X** | — | **CCVH2175X** | **CVS2175XMM** | **CV2175XMM** | **CVH2175XMM** |
| | 2 | 200 | **CCV2200X** | — | **CCVH2200X** | **CVS2200XMM** | **CV2200XMM** | **CVH2200XMM** |

***Notes***

① #2–300 kcmil wire size range for CCV and CCVH tenant main circuit breakers.
② "MM" suffix indicates mounting hardware kit is included as standard with tenant main breaker.
③ 1MMCBK replacement mounting hardware kit. One kit is needed per breaker. Mounting hardware kit ships standard with breaker "MM" suffix offering.
④ #6–4/0 kcmil wire size range for CVS, CV and CVH tenant main circuit breakers. If #2–300 kcmil is needed, order 2TA225CVK. One kit needed per breaker.

## Dimensions and Knockouts

Approximate Dimensions in Inches (mm)

### 1MP, 125 Ampere Meter Packs—Aluminum and Copper Bus

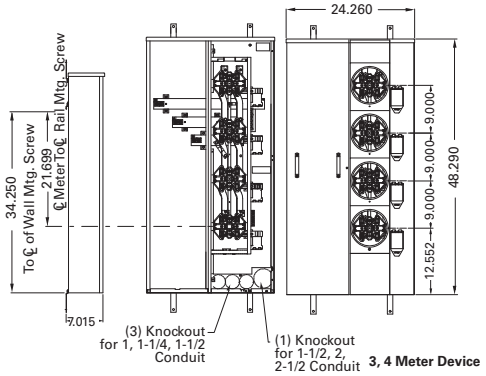


**3, 4 Meter Device**

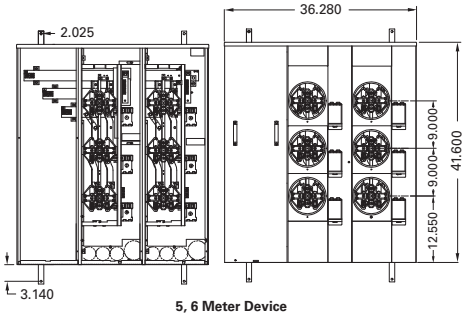


**5, 6 Meter Device**

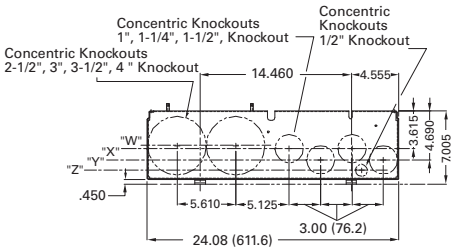


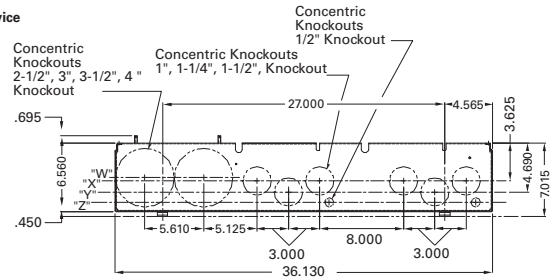


"Z" = ℄ of 1/2" Ring
"Y" = ℄ of 1-1/2" Ring
"X" = ℄ of 1-1/2" Ring
"W" = ℄ of 4" Ring

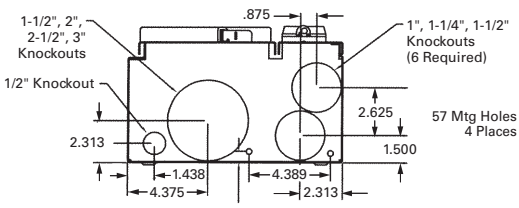


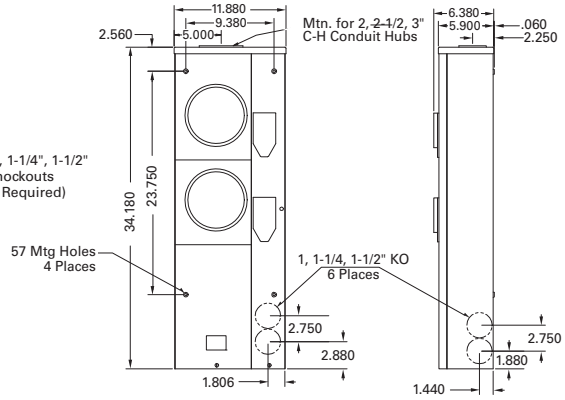


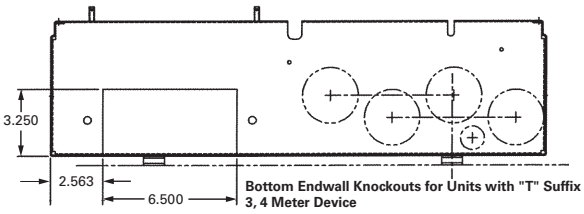


**Bottom Endwall Knockouts for Units with "T" Suffix 3, 4 Meter Device**

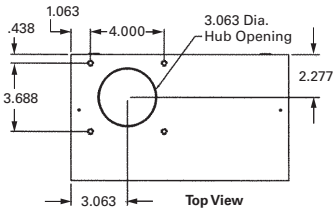


**Top View**

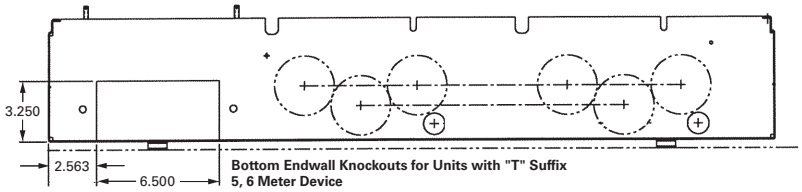


**Bottom Endwall Knockouts for Units with "T" Suffix 5, 6 Meter Device**

4

Approximate Dimensions in Inches (mm)

## 1MP, 200 Ampere Meter Packs—Aluminum and Copper Bus

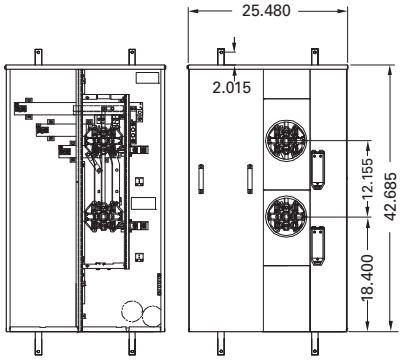


2 Meter Device

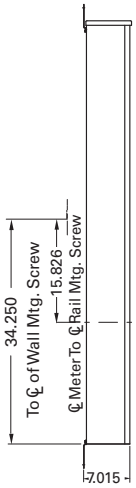


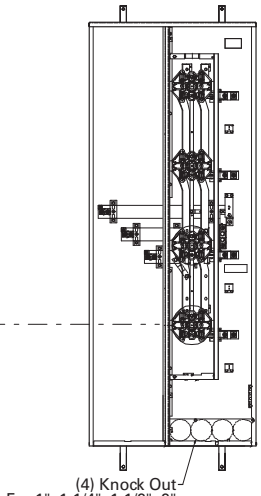


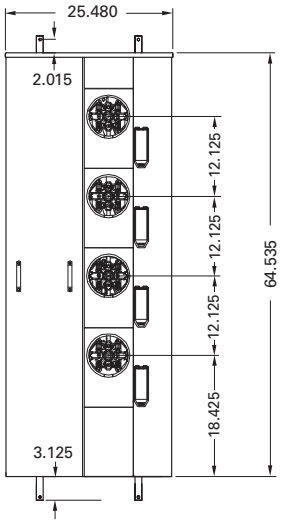


3, 4 Meter Device

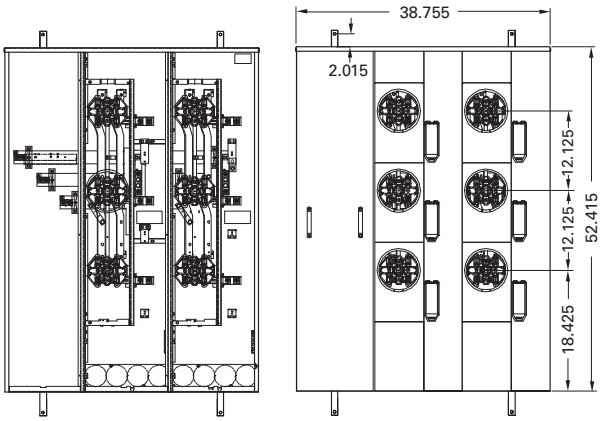


5, 6 Meter Device

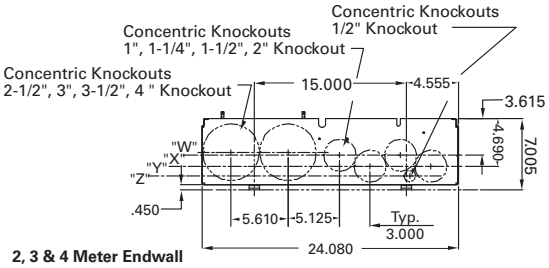


2, 3 & 4 Meter Endwall

"Z" = ℄ of 1/2" Ring
"Y" = ℄ of 1-1/2" Ring
"X" = ℄ of 1-1/2" Ring
"W" = ℄ of 4" Ring

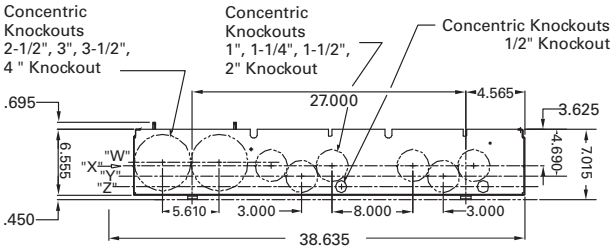


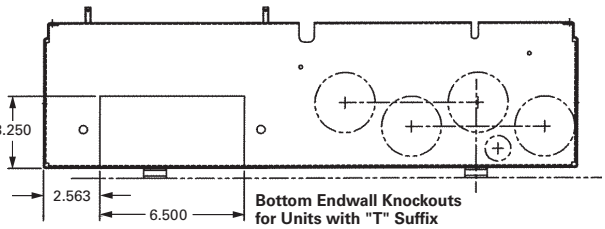


Bottom Endwall Knockouts
for Units with "T" Suffix
2, 3, 4 Meter Device

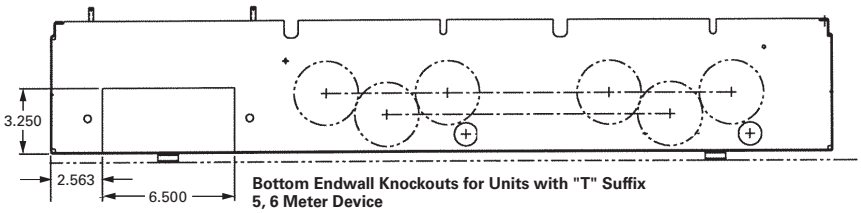


Bottom Endwall Knockouts for Units with "T" Suffix
5, 6 Meter Device

## Contents

| Description | Page |
|---|---|
| Systems for Residential and Commercial Applications | V1-T4-88 |
| Meter Packs | V1-T4-90 |
| Type CCV 120/240 V Tenant Main Circuit Breaker | V1-T4-95 |
| Type CV 120/240 V Tenant Main Circuit Breaker | V1-T4-96 |
| Meter Packs—1MP, 1MM and 3MM Main Tenant Circuit Breakers | V1-T4-98 |
| Main Service Modules | |
| Surge Metering | V1-T4-115 |
| Group Metering Inline Current Transformer Cabinets | V1-T4-116 |
| Residential Meter Stacks | V1-T4-118 |
| 1MP, 1MM and 3MM Main Tenant Circuit Breakers | V1-T4-127 |
| Phase Balanced Stack | V1-T4-128 |
| Commercial Meter Stack Modules | V1-T4-129 |
| 35MM, 37MM, 35SS and 37SS Main Tenant Circuit Breakers | V1-T4-136 |



## Main Service Modules

### Product Description

- Main terminal box
- Main circuit breaker
- Main bolted pressure switch
- Main fusible switch
- Main fusible switch with pull box
- Underground pull box

### Application Description

***Main Circuit Breakers with Busway Connections***

The Service Entrance Product Team announces the availability of both main fusible switch and main circuit breaker group metering mains with busway connections. This offering provides us with the ability to offer multiple tenant metering in high rise apartment buildings where riser busway is used.

### Features, Benefits and Functions

***Eaton's Main Service Module***

- Offering: main terminal/lug compartment, main circuit breaker, main fusible switch, main bolted pressure switch, main fusible switch with pull box (meets EUSERC electrical requirements), underground pull box termination compartment without cross bus (meets EUSERC electrical requirements)
- Mechanically and electrically built for use with 1MM, 3MM, 35MM, 37MM, 35SS and 37SS modular metering stacks
- For integrated system short-circuit ratings with main devices, see series ratings on **Page V1-T4-144**
- All main service modules include both left and right horizontal bus closure plates
- Two-pole devices are applied to single-phase, three-wire, 120/240 V or 208Y/120 V systems, three-pole devices to 208Y/240 V or 120/240 V delta systems
- Single-phase mains couple to any modular metering stack (1MM, 3MM, 35MM, 37MM, 35SS and 37SS)
- Three-phase mains require three-phase bussed stacks. These modular metering stacks are 3MM, 35MM, 37MM, 35SS and 37SS
- If the ampere rating of the main service module is greater than the horizontal bus rating of the meter stack (residential or commercial), the main service module must be center fed. Examples: 1200 A Main Circuit Breaker (**1MCB1200R**) with an 800 A residential stack (**1MM512R**). 1600 A Main Terminal Box (**3MTB1600R**) with a 1200 A residential stack (**3MM212R12**)
- Most main service modules are available with aluminum or copper bus

***Main Circuit Breakers with Busway Connections***

- Three-phase, 400–200 A main circuit breakers
- Three-phase, 400–800 A main fusible switches
- Simple bridge joint connection
- Variety of options:
  - Right or left mounting
  - Internal ground or housing ground
- The MFS/MCB and busway connector are supplied completely assembled

## Catalog Number Selection

**3 MTB 400 R __ C**

**Phase**
- **1** = Single-phase
- **3** = Three-phase

**Type of Metering**
- **BTB** = Main terminal box
- **MCB** = Main circuit breaker
- **BPS** = Bolted pressure switch
- **MFS** = Main fusible switch
- **UGPB** = Underground pull box
- **MTBE** = Main terminal box with utility pull box
- **MCBE** = Main circuit breaker with utility pull box

**Ampere Rating**
- **400 A**
- **600 A**
- **800 A**
- **1000 A**
- **1200 A**
- **1400 A**
- **1600 A**
- **2000 A**

**Enclosure**
- **R** = NEMA 3R

**Accessories and Additional Options**
- **BLK** = Box lug kit (accessory)
- **CLK** = Compression lug (accessory)
- **B** = Bottom feed
- **T** = Top feed
- **UG** = Pull box
- **Blank** = No options

**Bus Material**
- **C** = Copper bus
- **Blank** = Aluminum bus

### When Ordering:

1. Determine catalog number of Main Service Module.
2. Determine catalog number of Meter Stack (Residential or Commercial).
3. Find quantity and catalog numbers for tenant circuit breakers (found on **Page V1-T4-127** or **V1-T4-137**). Order one breaker per socket.
4. If any accessories are needed, order from **Pages V1-T4-138** and **V1-T4-139**.

## Product Selection

### *Main Terminal Box*

- Phase and neutral lugs are included
- Top or bottom feed:
  - For top feed, use Myer type hub
- Indoor or outdoor
- Terminal box UL listed short-circuit rating is the least AIC rating of any installed main tenant breaker—to a maximum of 100,000 rms symmetrical amperes

**Main Terminal Box**

### Main Terminal Box

| Ampere Rating | Line Side Lug and Wire Sizes—Included | System Voltage 120/240 Vac Single-Phase, Three-Wire Catalog Number | 120/208 Vac Three-Phase, Four-Wire Catalog Number |
|---|---|---|---|
| **Aluminum Bus (Standard Offering)** | | | |
| 400 | (1) #6–600 or (2) 1/0–250 kcmil ② | Use three-phase | **3MTB400R** |
| 600 | (2) 250–500 kcmil ③ | Use three-phase | **3MTB600R** |
| 800 | (4) 250–500 kcmil ④⑤ | **1MTB800R** | **3MTB800R** |
| 1200 ① | (4) 250–500 kcmil ⑤⑥ | **1MTB1200R** | **3MTB1200R** |
| **Aluminum Bus (EUSERC)** | | | |
| 400 | Crimp lug landing pads (no lugs included) | **1MTBE400R** ⑦ | **3MTBE400R** ⑦ |
| 800 | Crimp lug landing pads (no lugs included) | **1MTBE800R** ⑦ | **3MTBE800R** ⑦ |
| **Copper Bus (Premium Offering)** | | | |
| 400 | (1) #6–600 or (2) 1/0–250 kcmil ② | Use three-phase | **3MTB400RC** |
| 600 | (2) 250–500 kcmil ③ | Use three-phase | **3MTB600RC** |
| 800 | (4) 250–500 kcmil ④⑤ | **1MTB800RC** | **3MTB800RC** |
| 1200 ① | (4) 250–500 kcmil ⑤⑥ | **1MTB1200RC** | **3MTB1200RC** |
| 1600 ① | (6) 500 kcmil ⑧ | **1MTB1600RC** | **3MTB1600RC** |

### *Main Terminal Box Riser Panel*

Eaton's Main Terminal Box Riser Panel is a main terminal box with offset lugs on each phase to allow riser cables to pass through the main service module.

These panels are used in the construction of assisted living homes, dormitories, public housing complexes and apartments.

### Main Terminal Box Riser Panel

| Ampere Rating | Line and Load Side Lug and Wire Sizes Included | System Voltage 120/240 Vac Single-Phase, Three-Wire Catalog Number | 120/208 Vac Three-Phase, Four-Wire Catalog Number |
|---|---|---|---|
| **Copper Bus (Standard Offering)** | | | |
| 1200 | #2 AWG–750 kcmil ①⑨ | Use three-phase | **3MTB1200RCRIS** |
| 1600 | #2 AWG–750 kcmil ①⑨ | Use three-phase | **3MTB1600RCRIS** |

***Notes***

① 1200 A main devices must be center fed when installing 800 A residential meter stacks.
1600 A main devices must be center fed when installing 800–1200 A residential and commercial meter stacks.

② For 400 A units, to obtain (4) 750 kcmil cables per phase—order quantity 4 **1MPLK2**. Kit contains one lug.

③ For compression lug landing kits for 600 A units, order **3MTB600CLK**. Kit includes lug landings for three phases and neutral.

④ For 800 A units, to obtain (4) 1/0–300 kcmil or (2) 1/0–750 kcmil cables per phase—order catalog number **3MTB800BLK**, one lug kit per main terminal box ordered (neutral and ground included in kit).

⑤ For 800 A and 1200 A units, for compression lug landing kits, order **3MTB1200CLK**. Kit includes lug landings for three-phase and neutral.

⑥ For 1200 A units, to obtain (6) 1/0–300 kcmil or (3) 750 kcmil cables per phase—order catalog number **3MTB1200BLK**, one lug kit per main terminal box ordered (neutral and ground included in kit).

⑦ Meets EUSERC electrical requirements and eliminates the need to add additional pull box section. Reference drawing EUSERC DWG-343.

⑧ For 1600 A units, to obtain (4) 750 kcmil cables per phase—order catalog number **3MTB1600BLK**, one lug kit per main terminal box ordered. For a 1600 A compression lug landing kit, order catalog number **3MTB1600CLK**.

⑨ Quantity (10) lugs per phase—quantity (5) lugs incoming and quantity (5) lugs outgoing per phase.

***Main Circuit Breaker***

- Phase and neutral lugs included. If additional neutral lugs are needed, order 1MCB1200NLK for (3) 1/0–750 or (6) 1/0–300 kcmil
- For shunt trip mains, order the field-installable shunt trip kit in this volume, Tab 1, section 1.1
- For overhead feed, use Myer type hub. Verify local utility approval
- For compression lugs on 400, 600, 800, 1000 and 1200 A units, add CL to the end of the part number (includes copper lug pads for lines and neutral)
- 1200 A or greater main devices must be center fed when installing 800 A residential meter stacks
- 1400, 1600 and 2000 A main devices must be center fed when installing 800 and 1200 A residential and commercial meter stacks

**Main Circuit Breaker**

## Main Circuit Breaker

| Main Ampere Rating | Main Circuit Breaker Type | Feed | kAIC | Line Side Lug and Wire Sizes (Lugs Included with Main Breaker) ① | System Voltage 120/240 Vac Single-Phase, Three-Wire Catalog Number | System Voltage 120/208 Vac Three-Phase, Four-Wire Catalog Number |
|---|---|---|---|---|---|---|
| **Aluminum Bus (Standard Offering) ②** | | | | | | |
| 250 | KD | Bottom/top | 65 | (2) 3/0–250 kcmil or (1) 2/0–500 kcmil | **1MCB250R** | **3MCB250R** |
| 250 | HKD | Bottom/top | 100 | (2) 3/0–250 kcmil or (1) 2/0–500 kcmil | **1MHCB250R** | **3MHCB250R** |
| 300 | KD | Bottom/top | 65 | (2) 3/0–250 kcmil or (1) 2/0–500 kcmil | **1MCB300R** | **3MCB300R** |
| 300 | HKD | Bottom/top | 100 | (2) 3/0–250 kcmil or (1) 2/0–500 kcmil | **1MHCB300R** | **3MHCB300R** |
| 350 | KD | Bottom/top | 65 | (2) 3/0–250 kcmil or (1) 2/0–500 kcmil | **1MCB350R** | **3MCB350R** |
| 350 | HKD | Bottom/top | 100 | (2) 3/0–250 kcmil or (1) 2/0–500 kcmil | **1MHCB350R** | **3MHCB350R** |
| 400 | KD | Bottom/top | 65 | (2) 3/0–250 kcmil or (1) 2/0–500 kcmil | **1MCB400R** ③ | **3MCB400R** ③ |
| 400 | HKD | Bottom/top | 100 | (2) 3/0–250 kcmil or (1) 2/0–500 kcmil | **1MHCB400R** ③ | **3MHCB400R** ③ |
| 500 | LD | Bottom/top | 65 | (2) 400–500 kcmil | **1MCB500R** | **3MCB500R** |
| 500 | HLD | Bottom/top | 100 | (2) 400–500 kcmil | **1MHCB500R** | **3MHCB500R** |
| 600 | LD | Bottom/top | 65 | (2) 400–500 kcmil | **1MCB600R** ③ | **3MCB600R** ③ |
| 600 | HLD | Bottom/top | 100 | (2) 400–500 kcmil | **1MHCB600R** ③ | **3MHCB600R** ③ |
| 700 | HMDL | Bottom/top | 100 | (3) 3/0–400 kcmil | **1MHCB700R** | **3MHCB700R** |
| 700 | MDL | Bottom/top | 65 | (3) 3/0–400 kcmil | **1MCB700R** | **3MCB700R** |
| 800 | MDL | Bottom/top | 65 | (3) 3/0–400 kcmil | **1MCB800R** ③ | **3MCB800R** ③ |
| 800 | MDL | Bottom/top | 65 | (2) 500–750 kcmil | **1MCB800R750** | **3MCB800R750** |
| 800 | HMDL | Bottom/top | 100 | (3) 3/0–400 kcmil | **1MHCB800R** ③ | **3MHCB800R** ③ |
| 900 | NGS | Bottom/top | 65 | (4) 4/0–500 kcmil ④ | **1MCB900R** ⑤ | **3MCB900R** ⑤ |
| 900 | NGH | Bottom/top | 100 | (4) 4/0–500 kcmil ④ | **1MHCB900R** ⑤ | **3MHCB900R** ⑤ |
| 1000 | NGS | Bottom/top | 65 | (4) 4/0–500 kcmil ④ | **1MCB1000R** ③⑤ | **3MCB1000R** ③⑤ |
| 1000 | NGS | Bottom/top | 65 | (2) 500–750 kcmil | **1MCB1000R750** | **3MCB1000R750** |
| 1000 | NGH | Bottom/top | 100 | (4) 4/0–500 kcmil ④ | **1MHCB1000R** ③⑤ | **3MHCB1000R** ③⑤ |
| 1200 | NGS | Bottom | 65 | (4) 4/0–500 kcmil ④ | **1MCB1200R** ③⑤ | **3MCB1200R** ③⑤ |
| 1200 | NGH | Bottom | 100 | (4) 4/0–500 kcmil ④ | **1MHCB1200R** ③⑤ | **3MHCB1200R** ③⑤ |
| 1200 | NGS | Bottom | 65 | (2) 500–750 kcmil | Use three-phase | **3MCB1200R750** |

***Notes***

① If additional neutral lugs are needed, order **1MCB1200NLK** [(3) 1/0–750 kcmil or (6) 1/0–300 kcmil].
② Reference drawing EUSERC DWG-315.
③ Add CL to end of catalog number for compression lug pads (includes lug pads for lines and neutral).
④ If (3) 500–750 kcmil are needed, order **TA1201NB1**. Order one kit per pole.
⑤ Main devices with a rating greater than 800 A can be used with 800 A residential modular stacks, but only as a center fed main.

*Main Circuit Breaker*

Main Circuit Breaker

## Main Circuit Breaker, continued

| Main Ampere Rating | Main Circuit Breaker Type | Feed | kAIC | Line Side Lug and Wire Sizes (Lugs Included with Main Breaker) ① | System Voltage 120/240 Vac Single-Phase, Three-Wire Catalog Number | 120/208 Vac Three-Phase, Four-Wire Catalog Number |
|---|---|---|---|---|---|---|
| **Aluminum Bus (EUSERC) ②** | | | | | | |
| 300 | KD | Bottom/top | 65 | Crimp lug landing pads (no lugs included) | **1MCBE300R** | **3MCBE300R** |
| 350 | KD | Bottom/top | 65 | Crimp lug landing pads (no lugs included) | **1MCBE350R** | **3MCBE350R** |
| 400 | KD | Bottom/top | 65 | Crimp lug landing pads (no lugs included) | **1MCBE400R** | **3MCBE400R** |
| 400 | HKD | Bottom/top | 100 | Crimp lug landing pads (no lugs included) | **1MHCBE400R** | **3MHCBE400R** |
| 500 | LD | Bottom/top | 65 | Crimp lug landing pads (no lugs included) | **1MCBE500R** | **3MCBE500R** |
| 600 | LD | Bottom/top | 65 | Crimp lug landing pads (no lugs included) | **1MCBE600R** | **3MCBE600R** |
| 600 | HLD | Bottom/top | 100 | Crimp lug landing pads (no lugs included) | **1MHCBE600R** | **3MHCBE600R** |
| 800 | MDL | Bottom/top | 65 | Crimp lug landing pads (no lugs included) | **1MCBE800R** | **3MCBE800R** |
| 800 | HMDL | Bottom/top | 100 | Crimp lug landing pads (no lugs included) | **1MHCBE800R** | **3MHCBE800R** |
| 1000 | NGS | Bottom/top | 65 | Crimp lug landing pads (no lugs included) | **1MCBE1000R** | **3MCBE1000R** |
| 1200 | NGS | Bottom | 65 | Crimp lug landing pads (no lugs included) | **1MCBE1200R** | **3MCBE1200R** |
| 1200 | NGH | Bottom | 100 | Crimp lug landing pads (no lugs included) | **1MHCBE1200R** | **3MHCBE1200R** |
| **Copper Bus (Premium Offering)** | | | | | | |
| 400 | KD | Bottom/top | 65 | (2) 3/0–250 kcmil or (1) 2/0-500 kcmil | **1MCB400RC** ③ | **3MCB400RC** ③ |
| 400 | HKD | Bottom/top | 100 | 2/0–500 kcmil | **1MHCB400RC** ③ | **3MHCB400RC** ③ |
| 600 | LD | Bottom/top | 65 | (2) 300–500 kcmil | **1MCB600RC** ③ | **3MCB600RC** ③ |
| 600 | HLD | Bottom/top | 100 | (2) 300–500 kcmil | **1MHCB600RC** ③ | **3MHCB600RC** ③ |
| 800 | MDL | Bottom/top | 65 | (3) 3/0–400 kcmil | **1MCB800RC** ③ | **3MCB800RC** ③ |
| 800 | HMDL | Bottom/top | 100 | (3) 3/0–400 kcmil | **1MHCB800RC** ③ | **3MHCB800RC** ③ |
| 900 | NGS | Bottom/top | 65 | (4) 4/0–500 kcmil ④ | **1MCB900RC** ⑤ | **3MCB900RC** ⑤ |
| 900 | NGH | Bottom/top | 100 | (4) 4/0–500 kcmil ④ | **1MHCB900RC** ⑤ | **3MHCB900RC** ⑤ |
| 1000 | NGS | Bottom/top | 65 | (2) 500–750 kcmil | **1MCB1000R750C** | **3MCB1000R750C** |
| 1000 | NGS | Bottom/top | 65 | (4) 4/0–500 kcmil ④ | **1MCB1000RC** ③⑤ | **3MCB1000RC** ③⑤ |
| 1000 | NGH | Bottom/top | 100 | (4) 4/0–500 kcmil ④ | **1MHCB1000RC** ③⑤ | **3MHCB1000RC** ③⑤ |
| 1200 | NGS | Bottom | 65 | (2) 500–750 kcmil | Use three-phase | **3MCB1200R750C** |
| 1200 | NGS | Bottom | 65 | (4) 4/0–500 kcmil ④ | **1MCB1200RC** ③⑤ | **3MCB1200RC** ③⑤ |
| 1200 | NGH | Bottom | 100 | (4) 4/0–500 kcmil ④ | **1MHCB1200RC** ③⑤ | **3MHCB1200RC** ③⑤ |
| 1400 | RGH | Bottom | 100 | (4) 500–1000 kcmil ⑥ | **1MCB1400RBC** ⑤⑦ | **3MCB1400RBC** ⑤⑦ |
| 1400 | RGH | Top | 100 | (4) 500–1000 kcmil ⑥ | **1MCB1400RT** ⑧ | **3MCB1400RT** ⑧ |
| 1600 | RGH | Bottom | 100 | (4) 500–1000 kcmil ⑥ | **1MCB1600RBC** ⑦⑧ | **3MCB1600RBC** ⑦⑧ |
| 1600 | RGH | Top | 100 | (4) 500–1000 kcmil ⑥ | **1MCB1600RT** ⑧ | **3MCB1600RT** ⑧ |
| 2000 | RGH | Bottom | 100 | (6) #2–600 kcmil | **1MCB2000RBC** ⑦⑨ | **3MCB2000RBC** ⑦⑨ |
| 2000 | RGH | Top | 100 | (6) #2–600 kcmil | **1MCB2000RT** ⑨ | **3MCB2000RT** ⑨ |
| **Copper Bus (EUSERC) ②** | | | | | | |
| 1000 | NGH | Bottom | 100 | Crimp lug landing pads (no lugs included) | **1MCBE1000RC** | **3MCBE1000RC** |
| 1200 | NGS | Bottom | 65 | Crimp lug landing pads (no lugs included) | **1MCBE1200RC** | **3MCBE1200RC** |
| 1200 | NGH | Bottom | 100 | Crimp lug landing pads (no lugs included) | **1MHCBE1200RC** | **3MHCBE1200RC** |

***Notes***

① If additional neutral lugs are needed, order **1MCB1200NLK** [(3) 1/0–750 kcmil or (6) 1/0–300 kcmil].
② Reference drawing EUSERC DWG-315.
③ Add CL to end of catalog number for compression lug pads (includes lug pads for lines and neutral).
④ If (3) 500–750 kcmil are needed, order **TA1201NB1**. Order one kit per pole.
⑤ Main devices with a rating greater than 800 A can be used with 800 A residential modular stacks but only as a center fed main.
⑥ If (6) #2–600 kcmil lugs are needed, order **TA2000RD**. Catalog number includes terminals and hardware for three poles. If neutral is needed, order **TA2000N**.
⑦ Copper bus.
⑧ Main devices with a rating greater than 1200 A can be used with residential and commercial modular metering stacks but only as a center fed main.
⑨ Only to be used in center feed applications with 1200 A meter stacks. Not to be used with 800 A stacks.

***Main Fusible Switches***

- Fuses not included
- Main lugs and neutral included with device
- 100 kAIC rating on switches with Class T fuses installed. If converting to Class H, the kAIC rating is 10 and if converted to Class R, the kAIC rating is 200

**Note:** This is the fuse rating, switch still rated at 100 kAIC.

- 800 A top and bottom fed units are supplied with Class T fuse clips as standard. The Class T fuse clips are field convertible to Class L by repositioning. No kit is needed
- Barrier kits available for 400–800 A fusible switches: Bottom feed—**3MFSBBK**, Top feed—**3MFSTBK**

**Main Fusible Switches**

## Main Fusible Switches

| Ampere Rating | Feed | Class Fuse Clips (Fuses Not Included) | Line Side Box Lugs and Wire Sizes (Included with Switch) | System Voltage 120/240 Vac Single-Phase, Three-Wire Catalog Number | 120/208 Vac Three-Phase, Four-Wire Catalog Number |
|---|---|---|---|---|---|
| **Aluminum Bus (Standard Offering)** | | | | | |
| 400 | Bottom | T ① | (2) 1/0–300 kcmil or (1) 750 kcmil ④⑤ | **1MFS400RB** | **3MFS400RB** |
| 400 | Top | T ① | (2) 1/0–300 kcmil or (1) 750 kcmil ⑤⑥ | **1MFS400RT** | **3MFS400RT** |
| 600 | Bottom | T ② | (2) #2–600 kcmil ④⑤ | **1MFS600RB** | **3MFS600RB** |
| 600 | Top | T ② | (2) #2–600 kcmil ⑤⑥ | **1MFS600RT** | **3MFS600RT** |
| 800 | Bottom | T, L ③ | (4) 3/0–750 kcmil ④ | **1MFS800RB** | **3MFS800RB** |
| 800 | Top | T, L ③ | (4) 3/0–750 kcmil ⑥ | **1MFS800RT** | **3MFS800RT** |
| 1200 | Bottom | T, L ③ | (4) #2–600 kcmil ⑦ | **1MFS1200RB** | **3MFS1200RB** |
| **Copper Bus (Premium Offering)** | | | | | |
| 400 | Bottom | T ① | (2) 1/0–300 kcmil or (1) 750 kcmil ④⑤ | **1MFS400RBC** | **3MFS400RBC** |
| 400 | Top | T ① | (2) 1/0–300 kcmil or (1) 750 kcmil ⑤⑥ | **1MFS400RTC** | **3MFS400RTC** |
| 600 | Bottom | T ② | (2) #2–600 kcmil ④⑤ | **1MFS600RBC** | **3MFS600RBC** |
| 600 | Top | T ② | (2) #2–600 kcmil ⑤⑥ | **1MFS600RTC** | **3MFS600RTC** |
| 800 | Bottom | T, L ③ | (4) 3/0–750 kcmil ④ | **1MFS800RBC** | **3MFS800RBC** |
| 800 | Top | T, L ③ | (4) 3/0–750 kcmil ⑥ | **1MFS800RTC** | **3MFS800RTC** |
| 1200 | Bottom | T, L ③ | (4) #2–600 kcmil ⑦ | **1MFS1200RBC** | **3MFS1200RBC** |

***Notes***

① If Class H fuse clips are needed, use catalog number **WCG3HK400** (order (1) per phase).
If Class R fuse clips are needed, order catalog number **DS56FK** in addition to **WCG3HK400**.
In order to go from T to R, the device must first be converted to H.
All kits are field installable and each **DS56FK** kit will convert three poles.

② If Class H fuse clips are needed, use catalog number **WCG3HK600** (order (1) per phase).
If Class R fuse clips are needed, order catalog number **DS66FK** in addition to **WCG3HK600**.
In order to go from T to R, the device must first be converted to H.
All kits are field installable and each **DS66FK** kit will convert three poles.

③ Class T fuse clips provided are field convertible to Class L by repositioning. No kit is needed.

④ If compression lugs are being used, order **3MFS800CLK**. This compression lug kit includes four pads (three poles and neutral).

⑤ 1MFS600BLK (4) 3/0–750 kcmil/phase (one kit/phase and one kit/neutral).

⑥ If compression lugs are being used, order **3MFS800CLKT**. This compression lug kit includes four pads (three poles and neutral).

⑦ IMFS1200LK (3) 750 kcmil/phase (one kit/phase). IMFS1200LKN (3) 750 kcmil (neutral).

***Main Fusible Switch with Utility Pull Box***

- Fuses not included
- Includes lug landing pads on line side and neutral
- Spacer kit 3MMBSK required when stacks are mounted on right-hand side in EUSERC areas
- 100 kAIC rating on switches with Class T fuse clips installed

**Main Fusible Switch with Utility Pull Box**

## Main Fusible Switch with Utility Pull Box ①

| Ampere Rating | Feed | Class Fuse Clips (Fuses Not Included) | Line Side Box Lugs and Wire Sizes (Included with Switch) | System Voltage 120/240 Vac Single-Phase, Three-Wire Catalog Number | System Voltage 120/208 Vac Three-Phase, Four-Wire Catalog Number |
|---|---|---|---|---|---|
| **Aluminum Bus (Standard Offering)** | | | | | |
| 400 | Bottom | T | ② | **1MFS400RUG** | **3MFS400RUG** |
| 600 | Bottom | T | ② | **1MFS600RUG** | **3MFS600RUG** |
| 800 | Bottom | T, L | ② | **1MFS800RUG** | **3MFS800RUG** |
| 1200 | Bottom | T | ② | **1MFS1200RUG** | **3MFS1200RUG** |
| **Copper Bus (Premium Offering)** | | | | | |
| 400 | Bottom | T | ② | **1MFS400RUGC** | **3MFS400RUGC** |
| 600 | Bottom | T | ② | **1MFS600RUGC** | **3MFS600RUGC** |
| 800 | Bottom | T, L | ② | **1MFS800RUGC** | **3MFS800RUGC** |
| 1200 | Bottom | T | ② | **1MFS1200RUGC** | **3MFS1200RUGC** |

***Utility Pull Box***

- Includes lug landing pads on line side and neutral
- Requires cable connection in field to main device; does not include horizontal cross bus

## Pull Box ③

| Ampere Rating | Feed | Line Side Lug Information | Load Side Lug Information for Cable Connection to Main Disconnect | System Voltage 120/240 Vac Single-Phase, Three-Wire Catalog Number | System Voltage 120/208 Vac Three-Phase, Four-Wire Catalog Number |
|---|---|---|---|---|---|
| **Aluminum Bus (Standard Offering)** | | | | | |
| 400 | Bottom | ② | 1/0–750 kcmil or (2) 1/0–300 kcmil | **1UGPB400R** | **3UGPB400R** |
| 800 | Bottom | ② | (2) 1/0–750 kcmil or (4) 1/0–300 kcmil | **1UGPB800R** | **3UGPB800R** |
| 1200 | Bottom | ② | (4) #2–600 kcmil | **1UGPB1200R** | **3UGPB1200R** |
| **Copper Bus (Premium Offering)** | | | | | |
| 400 | Bottom | ② | 1/0–750 kcmil or (2) 1/0–300 kcmil | **1UGPB400RC** | **3UGPB400RC** |
| 800 | Bottom | ② | (2) 1/0–750 kcmil or (4) 1/0–300 kcmil | **1UGPB800RC** | **3UGPB800RC** |
| 1200 | Bottom | ② | (4) #2–600 kcmil | **1UGPB1200RC** | **3UGPB1200RC** |

***Notes***

① Reference drawing EUSERC DWG-315.
② Pull box section includes landing studs for line side compression lugs. Wire sizes refer to load side connection.
③ Reference drawing EUSERC DWG-343.

***Main Bolted Pressure Contact Switches***

- Add suffix ST to catalog number for shunt trip
- Fuses not included
- 100 kAIC rating on switches with Class L fuses installed



## Main Bolted Pressure Contact Switches

| Ampere Rating | Feed | Class Fuse Clips (Fuses Not Included) | System Voltage 120/240 Vac Single-Phase, Three-Wire Catalog Number | 120/208 Vac Three-Phase, Four-Wire Catalog Number | Line Side Box Lugs and Wire Sizes (Included) |
|---|---|---|---|---|---|
| **Copper Bus** | | | | | |
| 1200 | Bottom | L | **1BPS1200RB** | **3BPS1200RB** | (4) #4–600 kcmil |
| 1200 | Top | L | **1BPS1200RT** | **3BPS1200RT** | (4) #4–600 kcmil |
| 1600 | Bottom | L | Use three-phase | **3BPS1600RB** | (6) #4–600 kcmil |
| 1600 | Top | L | Use three-phase | **3BPS1600RT** | (6) #4–600 kcmil |
| 2000 | Bottom | L | Use three-phase | **3BPS2000RB** | (8) #4–600 kcmil |
| 2000 | Top | L | Use three-phase | **3BPS2000RT** | (8) #4–600 kcmil |

***Main Circuit Breaker with Busway Connection***

Verify proper left/right–bus/main phasing.

**Note:** "Right" means that the bus duct is to the right of the main and "left" means that the bus duct is to the left of the main. (See Dimension/Layout section for clarification.)

Using this information, select the correct main device catalog number per the selection chart.

## Main Circuit Breaker with Busway Connection

| Ampere Rating | Feed | System Voltage 120/208 Vac Three-Phase, Four-Wire Catalog Number | Internal Ground or Housing Ground | Standard T or TO Opposite Phasing | Right or Left Side |
|---|---|---|---|---|---|
| 400 | Bottom | **3MFS400BCRGTO** | Internal | TO | Right |
| 600 | Bottom | **3MFS600BCRGTO** | Internal | TO | Right |
| 800 | Bottom | **3MFS800BCRGTO** | Internal | TO | Right |
| 400 | Bottom | **3MFS400BCLGTO** | Internal | TO | Left |
| 600 | Bottom | **3MFS600BCLGTO** | Internal | TO | Left |
| 800 | Bottom | **3MFS800BCLGTO** | Internal | TO | Left |
| 400 | Bottom | **3MFS400BCRGT** | Internal | T | Right |
| 600 | Bottom | **3MFS600BCRGT** | Internal | T | Right |
| 800 | Bottom | **3MFS800BCRGT** | Internal | T | Right |
| 400 | Bottom | **3MFS400BCLGT** | Internal | T | Left |
| 600 | Bottom | **3MFS600BCLGT** | Internal | T | Left |
| 800 | Bottom | **3MFS800BCLGT** | Internal | T | Left |
| 400 | Bottom | **3MFS400BCRNTO** | Housing | TO | Right |
| 600 | Bottom | **3MFS600BCRNTO** | Housing | TO | Right |
| 800 | Bottom | **3MFS800BCRNTO** | Housing | TO | Right |
| 400 | Bottom | **3MFS400BCLNTO** | Housing | TO | Left |
| 600 | Bottom | **3MFS600BCLNTO** | Housing | TO | Left |
| 800 | Bottom | **3MFS800BCLNTO** | Housing | TO | Left |
| 400 | Bottom | **3MFS400BCRNT** | Housing | T | Right |
| 600 | Bottom | **3MFS600BCRNT** | Housing | T | Right |
| 800 | Bottom | **3MFS800BCRNT** | Housing | T | Right |
| 400 | Bottom | **3MFS400BCLNT** | Housing | T | Left |
| 600 | Bottom | **3MFS600BCLNT** | Housing | T | Left |
| 800 | Bottom | **3MFS800BCLNT** | Housing | T | Left |
| 400 | Bottom | **3MCB400BCRGT** | Internal | T | Right |
| 400 | Bottom | **3HMCB400BCRGT** | Internal | T | Right |
| 600 | Bottom | **3MCB600BCRGT** | Internal | T | Right |
| 600 | Bottom | **3HMCB600BCRGT** | Internal | T | Right |
| 800 | Bottom | **3MCB800BCRGT** | Internal | T | Right |
| 800 | Bottom | **3HMCB800BCRGT** | Internal | T | Right |
| 1000 | Bottom | **3MCB1000BCRGT** | Internal | T | Right |
| 1000 | Bottom | **3HMCB1000BCRGT** | Internal | T | Right |
| 1200 | Bottom | **3MCB1200BCRGT** | Internal | T | Right |
| 1200 | Bottom | **3HMCB1200BCRGT** | Internal | T | Right |
| 400 | Bottom | **3MCB400BCLGT** | Internal | T | Left |
| 400 | Bottom | **3HMCB400BCLGT** | Internal | T | Left |
| 600 | Bottom | **3MCB600BCLGT** | Internal | T | Left |
| 600 | Bottom | **3HMCB600BCLGT** | Internal | T | Left |
| 800 | Bottom | **3MCB800BCLGT** | Internal | T | Left |
| 800 | Bottom | **3HMCB800BCLGT** | Internal | T | Left |
| 1000 | Bottom | **3MCB1000BCLGT** | Internal | T | Left |
| 1000 | Bottom | **3HMCB1000BCLGT** | Internal | T | Left |
| 1200 | Bottom | **3MCB1200BCLGT** | Internal | T | Left |
| 1200 | Bottom | **3HMCB1200BCLGT** | Internal | T | Left |
| 400 | Bottom | **3MCB400BCRNT** | Housing | T | Right |
| 400 | Bottom | **3HMCB400BCRNT** | Housing | T | Right |
| 600 | Bottom | **3MCB600BCRNT** | Housing | T | Right |
| 600 | Bottom | **3HMCB600BCRNT** | Housing | T | Right |
| 800 | Bottom | **3MCB800BCRNT** | Housing | T | Right |
| 800 | Bottom | **3HMCB800BCRNT** | Housing | T | Right |
| 1000 | Bottom | **3MBC1000BCRNT** | Housing | T | Right |
| 1000 | Bottom | **3HMBC1000BCRNT** | Housing | T | Right |

## Main Circuit Breaker with Busway Connection, continued

| Ampere Rating | Feed | System Voltage 120/208 Vac Three-Phase, Four-Wire Catalog Number | Internal Ground or Housing Ground | Standard T or TO Opposite Phasing | Right or Left Side |
|---|---|---|---|---|---|
| 1200 | Bottom | **3MCB1200BCRNT** | Housing | T | Right |
| 1200 | Bottom | **3HMCB1200BCRNT** | Housing | T | Right |
| 400 | Bottom | **3MCB400BCLNT** | Housing | T | Left |
| 400 | Bottom | **3HMCB400BCLNT** | Housing | T | Left |
| 600 | Bottom | **3MCB600BCLNT** | Housing | T | Left |
| 600 | Bottom | **3HMCB600BCLNT** | Housing | T | Left |
| 800 | Bottom | **3MCB800BCLNT** | Housing | T | Left |
| 800 | Bottom | **3HMCB800BCLNT** | Housing | T | Left |
| 1000 | Bottom | **3MCB1000BCLNT** | Housing | T | Left |
| 1000 | Bottom | **3HMCB1000BCLNT** | Housing | T | Left |
| 1200 | Bottom | **3MCB1200BCLNT** | Housing | T | Left |
| 1200 | Bottom | **3HMCB1200BCLNT** | Housing | T | Left |
| 400 | Bottom | **3MCB400BCRGTO** | Internal | TO | Right |
| 400 | Bottom | **3HMCB400BCRGTO** | Internal | TO | Right |
| 600 | Bottom | **3MCB600BCRGTO** | Internal | TO | Right |
| 600 | Bottom | **3HMCB600BCRGTO** | Internal | TO | Right |
| 800 | Bottom | **3MCB800BCRGTO** | Internal | TO | Right |
| 800 | Bottom | **3HMCB800BCRGTO** | Internal | TO | Right |
| 1000 | Bottom | **3MCB1000BCRGTO** | Internal | TO | Right |
| 1000 | Bottom | **3HMCB1000BCRGTO** | Internal | TO | Right |
| 1200 | Bottom | **3MCB1200BCRGTO** | Internal | TO | Right |
| 1200 | Bottom | **3HMCB1200BCRGTO** | Internal | TO | Right |
| 400 | Bottom | **3MCB400BCLGTO** | Internal | TO | Left |
| 400 | Bottom | **3HMCB400BCLGTO** | Internal | TO | Left |
| 600 | Bottom | **3MCB600BCLGTO** | Internal | TO | Left |
| 600 | Bottom | **3HMCB600BCLGTO** | Internal | TO | Left |
| 800 | Bottom | **3MCB800BCLGTO** | Internal | TO | Left |
| 800 | Bottom | **3HMCB800BCLGTO** | Internal | TO | Left |
| 1000 | Bottom | **3MCB1000BCLGTO** | Internal | TO | Left |
| 1000 | Bottom | **3HMCB1000BCLGTO** | Internal | TO | Left |
| 1200 | Bottom | **3MCB1200BCLGTO** | Internal | TO | Left |
| 1200 | Bottom | **3HMCB1200BCLGTO** | Internal | TO | Left |
| 400 | Bottom | **3MCB400BCRNTO** | Housing | TO | Right |
| 400 | Bottom | **3HMCB400BCRNTO** | Housing | TO | Right |
| 600 | Bottom | **3MCB600BCRNTO** | Housing | TO | Right |
| 600 | Bottom | **3HMCB600BCRNTO** | Housing | TO | Right |
| 800 | Bottom | **3MCB800BCRNTO** | Housing | TO | Right |
| 800 | Bottom | **3HMCB800BCRNTO** | Housing | TO | Right |
| 1000 | Bottom | **3MCB1000BCRNTO** | Housing | TO | Right |
| 1000 | Bottom | **3HMCB1000BCRNTO** | Housing | TO | Right |
| 1200 | Bottom | **3MCB1200BCRNTO** | Housing | TO | Right |
| 1200 | Bottom | **3HMCB1200BCRNTO** | Housing | TO | Right |
| 400 | Bottom | **3MCB400BCLNTO** | Housing | TO | Left |
| 400 | Bottom | **3HMCB400BCLNTO** | Housing | TO | Left |
| 600 | Bottom | **3MCB600BCLNTO** | Housing | TO | Left |
| 600 | Bottom | **3HMCB600BCLNTO** | Housing | TO | Left |
| 800 | Bottom | **3HMCB800BCLNTO** | Housing | TO | Left |
| 800 | Bottom | **3HMCB800BCLNTO** | Housing | TO | Left |
| 1000 | Bottom | **3MCB1000BCLNTO** | Housing | TO | Left |
| 1000 | Bottom | **3HMCB1000BCLNTO** | Housing | TO | Left |
| 1200 | Bottom | **3MCB1200BCLNTO** | Housing | TO | Left |
| 1200 | Bottom | **3HMCB1200BCLNTO** | Housing | TO | Left |

## Dimensions

Approximate Dimensions in Inches (mm)

### Dimensions (Not to be Used for Construction Purposes)

| Main Device | Width A | Height B | Depth C | Mounting D | E | Center Line of Wall Mounting Bracket F | Knockouts in Bottom Endwalls Except No KOs for Top Feed Switch or Bolted Pressure Switch Conduit Diameter Inches | mm | KO Dwg. |
|---|---|---|---|---|---|---|---|---|---|
| **Terminal Box** | | | | | | | | | |
| 400 and 600 A | 13.50 (342.9) | 48.75 (1238.3) | 7.00 (177.8) | — | 54.00 (1371.6) | 30.63 (777.9) | (1) 2.50, 3.00, 3.50, 4.00<br>(1) 0.50 | (1) 63.5, 76.2, 88.9, 101.6<br>(1) 12.7 | 1 |
| 800 and 1200 A | 20.00 (508.0) | 47.63 (1209.8) | 11.75 (298.5) | 12.00 (304.8) | 51.50 (1308.1) | 30.63 (777.9) | (2) 0.50, 0.75, 1.00<br>(4) 2.00, 2.50, 3.00, 3.50, 4.00 | (2) 12.1, 19.1, 25.4<br>(4) 50.8, 63.5, 76.2, 88.9, 101.6 | 2 |
| 1600 A | 32.88 (835.2) | 60.13 (1527.3) | 11.44 (290.6) | 16.00 (406.4) | 64.13 (1628.9) | 38.59 (980.2) | (1) 0.75, 1.00, 1.25, 1.50<br>(5) 3.00, 3.50, 4.00, 5.00 | (1) 19.1, 25.4, 31.8, 38.1<br>(5) 76.2, 88.9, 101.6, 127.0 | 3 |
| **Main Circuit Breaker with Box Lugs** | | | | | | | | | |
| 400–1200 A | 20.00 (508.0) | 47.63 (1209.8) | 11.75 (298.5) | 12.00 (304.8) | 51.50 (1308.1) | 30.63 (777.9) | (2) 0.50, 0.75, 1.00<br>(4) 2.00, 2.50, 3.00,3.50, 4.00 | (2) 12.7, 19.1, 25.4<br>(4) 50.8, 63.5, 76.2, 88.9, 101.6 | 2 |
| 1400–2000 A | 24.88 (632.0) | 57.13 (1451.0) | 14.88 (378.0) | 16.00 (406.4) | 57.13 (1451.0) | 44.00 (1117.6) | — | — | — |
| **Main Circuit Breaker with Compression Lugs** | | | | | | | | | |
| 400–1200 A | 20.00 (508.0) | 61.00 (1549.4) | 11.75 (298.5) | 12.00 (304.8) | 65.00 (1651.0) | 44.00 (1117.6) | (2) 0.50, 0.75, 1.00<br>(4) 2.00, 2.50, 3.00, 3.50, 4.00 | (2) 12.7, 19.1, 25.4<br>(4) 50.8, 63.5, 76.2, 88.9, 101.60 | 2 |
| **Main Fusible Switch** | | | | | | | | | |
| Bottom feed 400–800 A | 20.00 (508.0) | 47.63 (1209.8) | 11.75 (298.5) | 12.00 (304.8) | 51.50 (1308.1) | 30.63 (777.9) | (2) 0.50, 0.75, 1.00<br>(4) 2.00, 2.50, 3.00, 3.50, 4.00 | (2) 12.7, 19.1, 25.4<br>(4) 50.8, 63.5, 76.2, 88.9, 101.6 | 2 |
| Top feed 400–800 A | 20.00 (508.0) | 47.63 (1209.8) | 11.75 (298.5) | 12.00 (304.8) | 51.50 (1308.1) | 18.13 (460.4) | (2) 0.50, 0.75, 1.00<br>(4) 2.00, 2.50, 3.00, 3.50, 4.00 | (2) 12.7, 19.1, 25.4<br>(4) 50.8, 63.5, 76.2, 88.9, 101.6 | 2 |
| 1200 A | 33.50 (850.9) | 52.75 (1339.9) | 11.88 (301.8) | 16.00 (406.4) | 56.25 (1428.8) | 30.75 (781.1) | (5) 3.50, 4.00, 5.00<br>(1) 0.75, 1.00, 1.25, 1.50 | (5) 88.9, 101.6, 127.0<br>(1) 19.1, 25.4, 31.8, 38.1 | 4 |
| **Bolted Pressure Switch** | | | | | | | | | |
| | 36.50 (927.1) | 66.50 (1689.1) | 19.50 (495.3) | 28.00 (711.2) | 60.00 (1524.0) | 30.63 (777.9) | — | — | — |
| **Main Fusible Switch with Pull Box** | | | | | | | | | |
| 400 A | 20.00 (508.0) | 61.00 (1549.4) | 11.75 (298.5) | 12.00 (304.8) | 65.00 (1651.0) | 44.00 (1117.6) | (2) 0.50, 0.75, 1.00<br>(4) 2.00, 2.50, 3.00, 3.50, 4.00 | (2) 12.7, 19.1, 25.4<br>(4) 50.8, 63.5, 76.2, 88.9, 101.6 | 2 |
| 600 and 800 A (single-phase) | 20.00 (508.0) | 61.00 (1549.4) | 11.75 (298.5) | 12.00 (304.8) | 65.00 (1651.0) | 44.00 (1117.6) | (2) 0.50, 0.75, 1.00<br>(4) 2.00, 2.50, 3.00, 3.50, 4.00 | (2) 12.7, 19.1, 25.4<br>(4) 50.8, 63.5, 76.2, 88.9, 101.6 | 2 |
| 600 and 800 A (three-phase) | 25.06 (636.5) | 61.00 (1549.4) | 11.75 (298.5) | 17.00 (431.8) | 65.00 (1651.0) | 44.00 (1117.6) | (2) 0.50, 0.75, 1.00<br>(4) 2.00, 2.50, 3.00, 3.50, 4.00 | (2) 12.7, 19.1, 25.4<br>(4) 50.8, 63.5, 76.2, 88.9, 101.6 | 4 |
| 1200 A | 33.50 (850.9) | 61.50 (1562.1) | 11.88 (301.8) | 16.00 (406.4) | 65.25 (1657.4) | 48.00 (1219.2) | (5) 3.50, 4.00, 5.00<br>(1) 0.75, 1.00, 1.25, 1.50 | (5) 88.9, 101.6, 127.0<br>(1) 19.1, 25.4, 31.8, 38.1 | 4 |
| **Main Circuit Breaker with Pull Box (EUSERC)** | | | | | | | | | |
| 400 A | 20.01 (508.2) | 60.44 (1535.2) | 11.14 (283.0) | 12.00 (304.8) | 65.11 (1653.8) | 39.75 (1009.6) | (4) 2.50, 3.00, 3.50, 4.00 | (4) 63.5, 76.2, 88.9, 101.6 | 2 |
| 800 A | 24.88 (632.0) | 60.94 (1547.9) | 11.14 (283.0) | 17.00 (431.8) | 64.88 (1648.0) | 39.81 (1011.2) | (4) 2.50, 3.00, 3.50, 4.00 | (4) 63.5, 76.2, 88.9, 101.6 | 2 |
| 1200 A | 33.00 (838.2) | 61.14 (1553.0) | 11.32 (287.5) | 16.00 (406.4) | 65.25 (1657.4) | 43.56 (1106.4) | (4) 2.50, 3.00, 3.50, 4.00 | (4) 63.5, 76.2, 88.9, 101.6 | 4 |
| **Pull Box** | | | | | | | | | |
| 400 A | 16.38 (416.1) | 44.88 (1140.0) | 7.88 (200.2) | 8.00 (203.2) | 45.75 (1162.1) | 28.63 (727.2) | (2) 4.00 | 101.6 | 5 |
| 800 A | 24.38 (619.3) | 46.88 (1190.8) | 11.88 (301.8) | 12.00 (304.8) | 47.75 (1212.9) | 32.25 (819.2) | (3) 4.00 | 101.6 | 6 |
| 1200 A | 32.50 (825.5) | 56.88 (1444.8) | 12.00 (304.8) | 17.75 (450.9) | 57.75 (1466.9) | 42.25 (1073.2) | (4) 5.00 | 127.0 | 7 |
| **EUSERC Bussed Pull Section** | | | | | | | | | |
| Single-phase 400 and 800 A | 20.13 (511.3) | 61.00 (1549.4) | 11.25 (285.8) | 12.00 (304.8) | 64.88 (1648.0) | 44.00 (1117.6) | (4) 2.50, 3.00, 3.50, 4.00 | (4) 63.5, 76.2, 88.9, 101.6 | 5 |
| Three-phase 400 and 800 A | 25.13 (638.3) | 61.00 (1549.4) | 11.88 (301.8) | 17.00 (431.8) | 64.88 (1648.0) | 44.00 (1117.6) | (4) 2.50, 3.00, 3.50, 4.00 | (4) 63.5, 76.2, 88.9, 101.6 | 6 |
| **EUSERC Main Terminal Box** | | | | | | | | | |
| Single-phase 400 and 800 A | 20.13 (511.3) | 61.00 (1549.4) | 11.88 (301.8) | 12.00 (304.8) | 64.88 (1648.0) | 44.00 (1117.6) | (2) 0.50, 0.75, 1.00 | (2) 12.7, 19.1, 25.4 | 2 |
| Three-phase 400 A | 20.13 (511.3) | 61.00 (1549.4) | 11.88 (301.8) | 12.00 (304.8) | 64.88 (1648.0) | 44.00 (1117.6) | (4) 2.00, 2.50, 3.00, 3.50, 4.00 | (4) 50.8, 63.5, 76.2, 88.9, 101.6 | 2 |
| Three-phase 800 A | 25.13 (638.3) | 61.00 (1549.4) | 11.88 (301.8) | 17.00 (431.8) | 64.88 (1648.0) | 44.00 (1117.6) | (4) 2.00, 2.50, 3.00, 3.50, 4.00 | (4) 50.8, 63.5, 76.2, 88.9, 101.6 | 2 |

Approximate Dimensions in Inches (mm)

### Main Circuit Breakers, Terminal Boxes and Pull Boxes

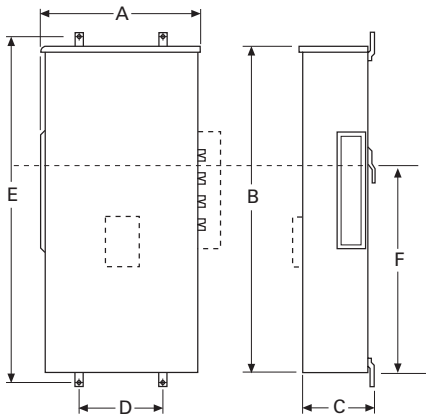


**Main CB, Non-Euserc Terminal Box and Pullboxes**

### Bolted Pressure Switch

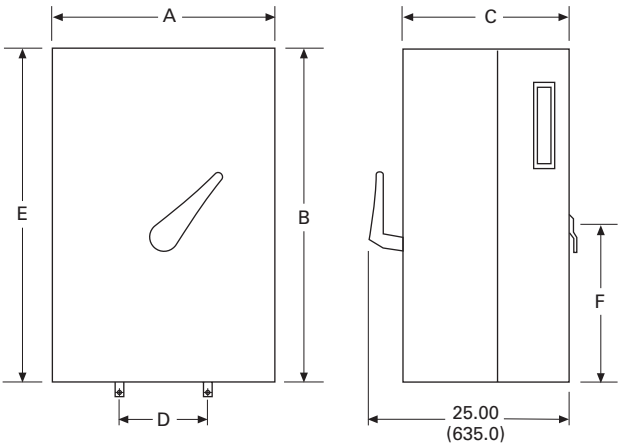


### Top Feed Fusible Switch

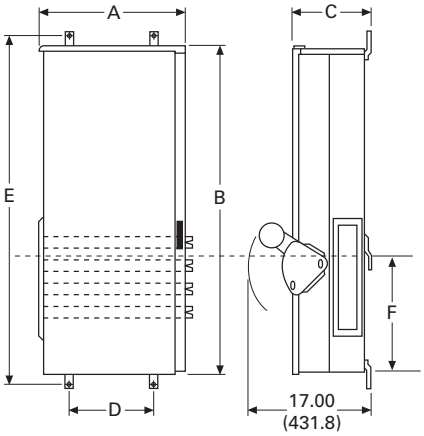


**Top Feed Switch (No Knockouts)**

### EUSERC Main Terminal Box

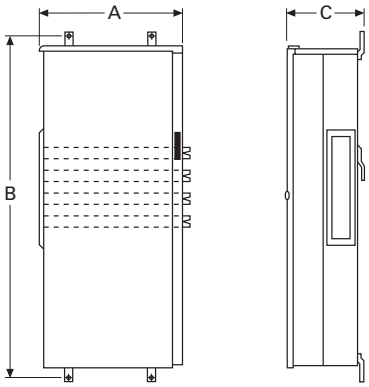


### Bottom Feed Fusible Switch and Combination Fusible Switch with Pull Box

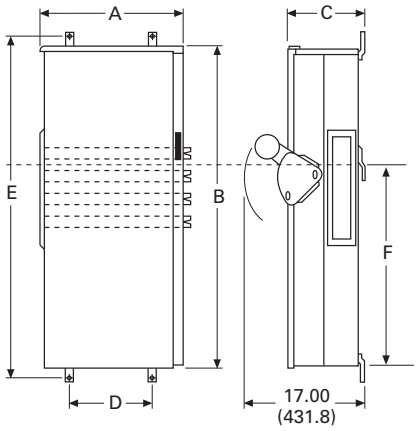


**Bottom Feed Switch and Combination Switch/Pullbox**

Approximate Dimensions in Inches (mm)

## Knockout 1

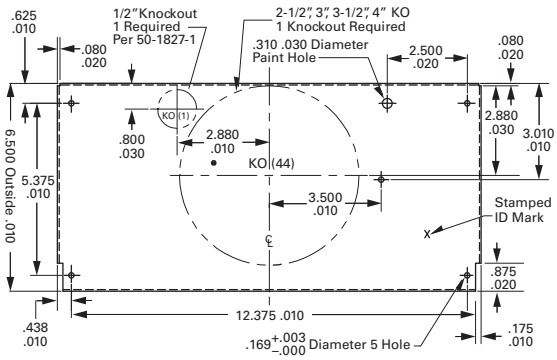


## Knockout 2

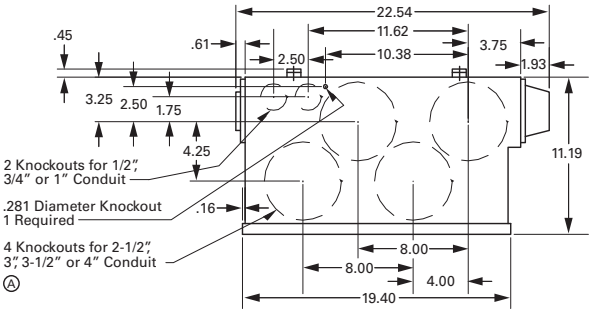


## Knockout 3

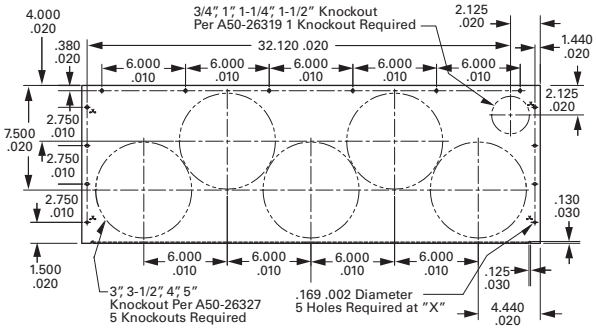


## Knockout 4

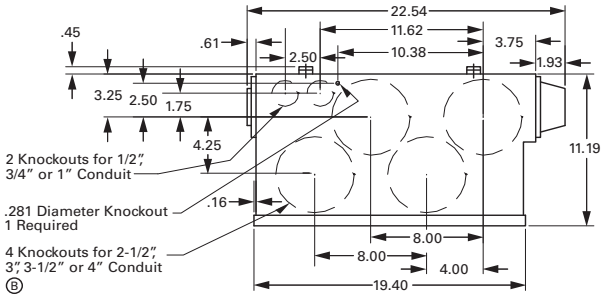


## Knockout 5

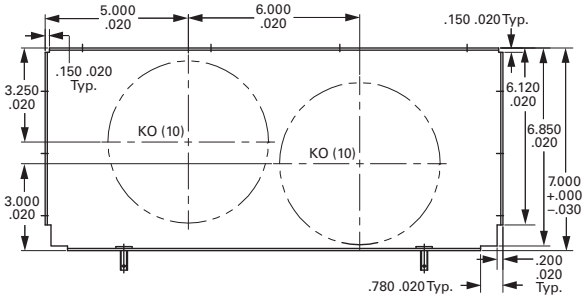


## Knockout 6

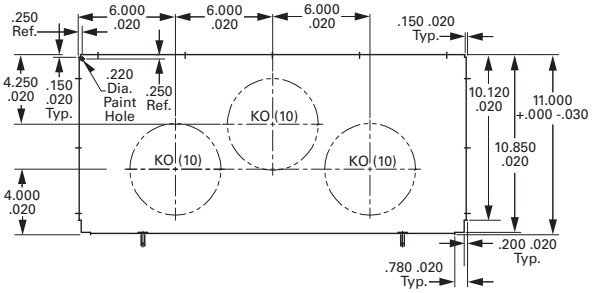


## Knockout 7

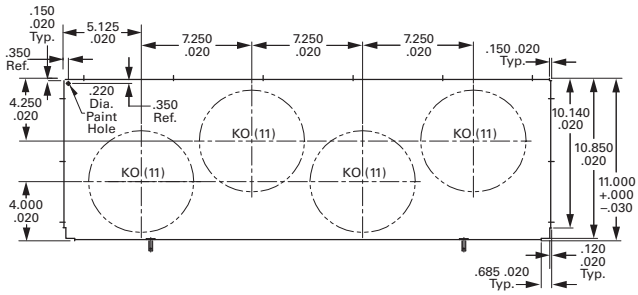


## Knockout 8

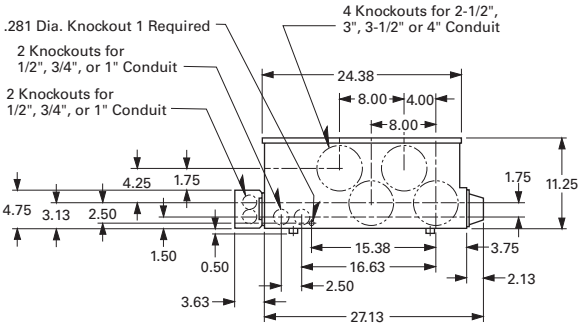

Approximate Dimensions in Inches (mm)

**Layout—Main Fusible Switch**

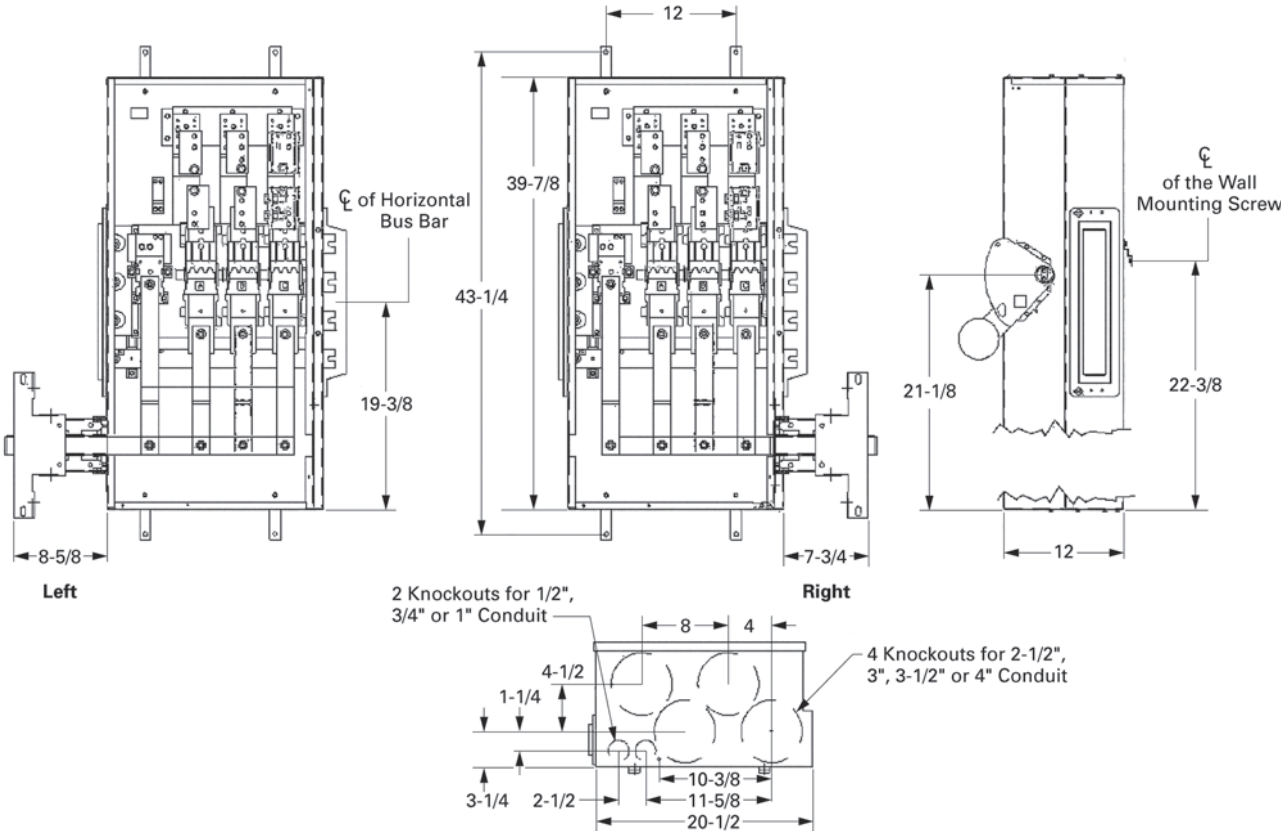

Approximate Dimensions in Inches (mm)

### Main Circuit Breaker—"T-Opposite" Phasing Right

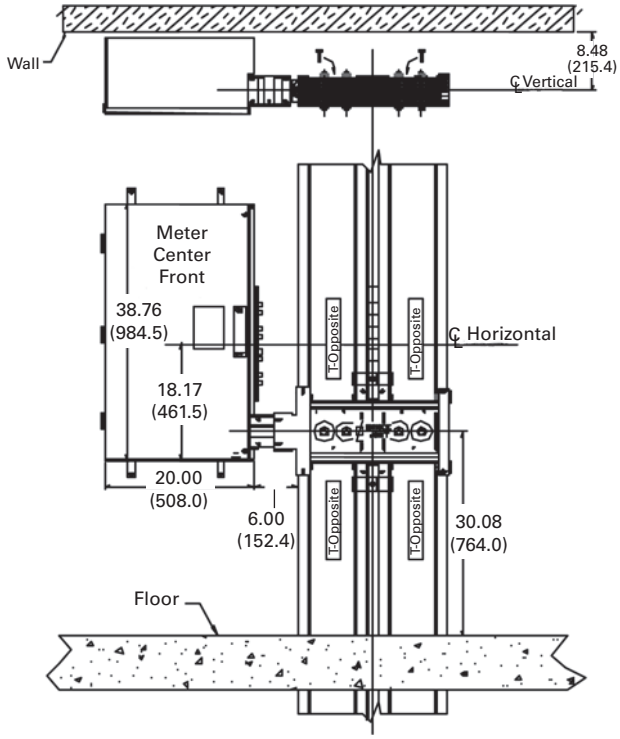


### Main Circuit Breaker—"Standard T" Phasing Right

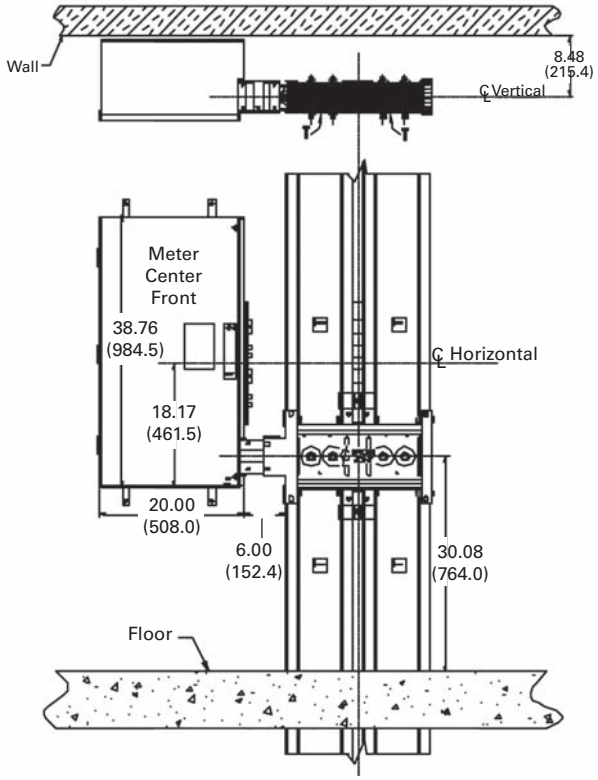


### Main Circuit Breaker—"T-Opposite" Phasing Left

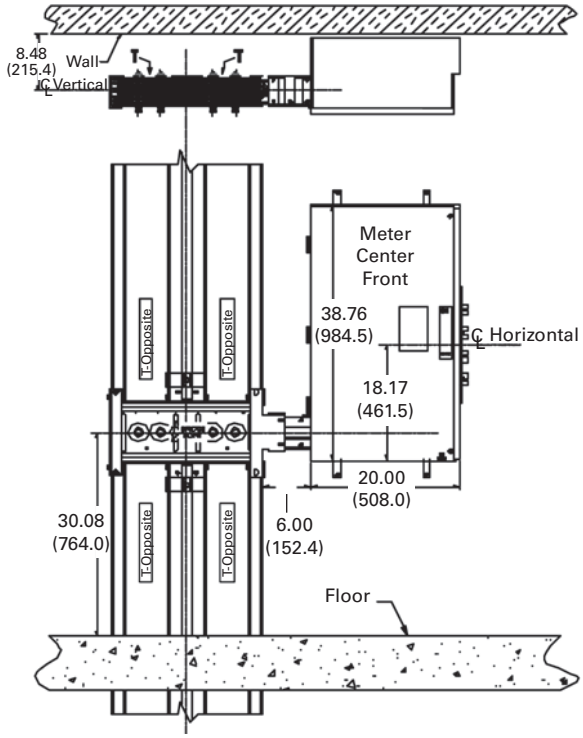


### Main Circuit Breaker—"Standard T" Phasing Left

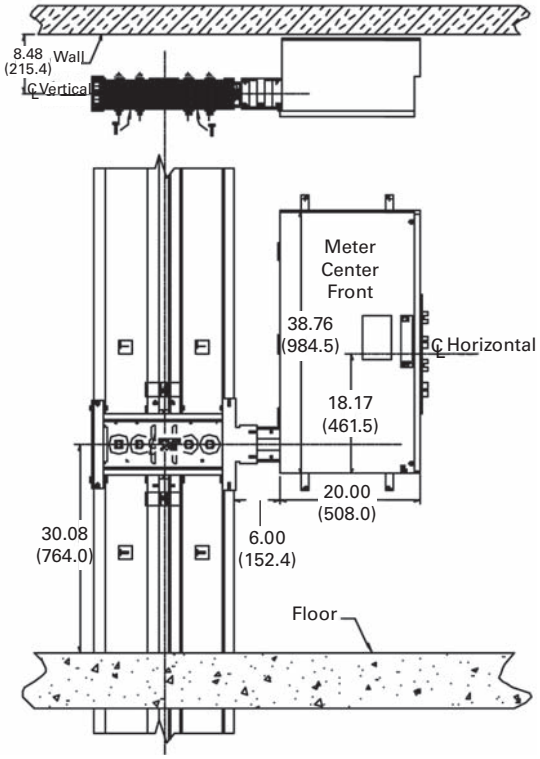

Surge Metering

*Surge suppression devices shown are factory mounted in Group Metering Enclosure.*

## Contents


| *Description* | *Page* |
|---|---|
| Systems for Residential and Commercial Applications | **V1-T4-88** |
| Meter Packs | **V1-T4-90** |
| Type CCV 120/240 V Tenant Main Circuit Breaker | **V1-T4-95** |
| Type CV 120/240 V Tenant Main Circuit Breaker | **V1-T4-96** |
| Meter Packs—1MP, 1MM and 3MM Main Tenant Circuit Breakers | **V1-T4-98** |
| Main Service Modules | **V1-T4-101** |
| Surge Metering | |
| Group Metering Inline Current Transformer Cabinets | **V1-T4-116** |
| Residential Meter Stacks | **V1-T4-118** |
| 1MP, 1MM and 3MM Main Tenant Circuit Breakers | **V1-T4-127** |
| Phase Balanced Stack | **V1-T4-128** |
| Commercial Meter Stack Modules | **V1-T4-129** |
| 35MM, 37MM, 35SS and 37SS Main Tenant Circuit Breakers | **V1-T4-136** |


4

## Surge Metering

### Product Description

Eaton's multiple metering product family is proud to announce the availability of main surge devices. The new main surge is mounted between the main service module and the meter stacks and serves the purpose of providing surge protection for downstream multiple metering products. The main surge is compatible with all meter stacks currently manufactured (1MM, 3MM, 35MM and 37MM).

### Features, Benefits and Functions

- Uses thermally protected metal oxide varistor (MOV) technology
- Compatible with 37MM enclosure accessories
- Protection status indicator lights EMI/RFI filtering and audible alarms
- Offers surge protection for all units fed from a main service module
- Benefit for building/complex owners who want to offer surge protection to their tenants. Owner can market their apartment complex as being surge friendly to appliances and electronics
- **Attain local utility company approval. Not for use in EUSERC area**

### Standards and Certifications

- UL 1449 3rd Edition recognized component

UL Listed

### Product Selection

#### Surge Metering

| Voltage | Surge Current per Phase (kA) | Diagnostics | Catalog Number |
|---|---|---|---|
| 120/240 V single-phase | 100 | Standard | **1MMSURGE** |
| 208Y/120 V three-phase | 100 | Standard | **3MMSURGE** |

## Contents


| *Description* | *Page* |
|---|---|
| Systems for Residential and Commercial Applications | **V1-T4-88** |
| Meter Packs | **V1-T4-90** |
| Type CCV 120/240 V Tenant Main Circuit Breaker | **V1-T4-95** |
| Type CV 120/240 V Tenant Main Circuit Breaker | **V1-T4-96** |
| Meter Packs—1MP, 1MM and 3MM Main Tenant Circuit Breakers | **V1-T4-98** |
| Main Service Modules | **V1-T4-101** |
| Surge Metering | **V1-T4-115** |
| Group Metering Inline Current Transformer Cabinets | |
| Residential Meter Stacks | **V1-T4-118** |
| 1MP, 1MM and 3MM Main Tenant Circuit Breakers | **V1-T4-127** |
| Phase Balanced Stack | **V1-T4-128** |
| Commercial Meter Stack Modules | **V1-T4-129** |
| 35MM, 37MM, 35SS and 37SS Main Tenant Circuit Breakers | **V1-T4-136** |


## Group Metering Inline Current Transformer Cabinets

### Product Description

Eaton's group metering inline current transformer (CT) cabinets are used when utilities require the use of current transformers to meter large services. These products are compatible with Eaton's group metering offering for both single- and three-phase applications with tenant metering requirements greater than 400 A.

### Features, Benefits and Functions

- Replaces separate termination box in installation to save wall space, labor and material for the contractor
- Compatible for utility-provided current transformers to be bolted in place, increasing flexibility to both the customer and utility
- Padlockable hinged doors restrict access to fuses or current transformers to ensure safety and security
- Available for pullout or fusible switch disconnect to accommodate the user's preference
- Offered in three-phase in/three-phase out, three-phase in / single-phase out, and single-phase in/single-phase out to complete a full product line offering

## Product Selection

### Group Metering Inline Current Transformer Cabinets

| Ampere Rating | Pullout or Switch | Phase | Catalog Number |
|---|---|---|---|
| 400 | 2 Pullouts | Single-phase in / single-phase out | **CTAP3244NCM8CH11** |
| 400 | 2 Pullouts | Three-phase in / single-phase out | **CTAP3244NCM8CH31** |
| 400 | 1 Pullout | Single-phase in / single-phase out | **CTAP325NCM8CH11** |
| 400 | 1 Pullout | Three-phase in / single-phase out | **CTAP325NCM8CH31** |
| 400 | 2 Pullouts | Three-phase in / three-phase out | **CTAP4244NCM8CH** |
| 400 | 1 Pullout | Three-phase in / three-phase out | **CTAP425NCM8CH** |
| 400 | Switch | Single-phase in / single-phase out | **CTAT325NCM8CH11** |
| 400 | Switch | Three-phase in / single-phase out | **CTAT325NCM8CH31** |
| 600 | Switch | Single-phase in / single-phase out | **CTAT326NCM8CH11** |
| 600 | Switch | Three-phase in / single-phase out | **CTAT326NCM8CH31** |
| 800 | Switch | Single-phase in / single-phase out | **CTAT327NCM8CH11** |
| 800 | Switch | Three-phase in / single-phase out | **CTAT327NCM8CH31** |
| 400 | Switch | Three-phase in / three-phase out | **CTAT425NCM8CH** |
| 600 | Switch | Three-phase in / three-phase out | **CTAT426NCM8CH** |
| 800 | Switch | Three-phase in / three-phase out | **CTAT427NCM8CH** |

## Accessories

### Group Metering Inline Current Transformer Cabinets

| Description | Catalog Number |
|---|---|
| Wire harness (6 ft) per COMED requirements | **9659** |
| 400 A C/T link and support assembly | **CTL054550** |
| 600 A C/T link and support assembly | **CTL054552** |
| 800 A C/T link and support assembly | **CTL054554** |

## Dimensions

Approximate Dimensions in Inches (mm)

### Group Metering Inline Current Transformer Cabinets

| Height | Width | Depth |
|---|---|---|
| 64.00 (1625.6) | 26.50 (673.1) | 15.00 (381.0) |

**1MM and 3MM Metering Stack Modules**

## Contents


| *Description* | *Page* |
|---|---|
| Systems for Residential and Commercial Applications | **V1-T4-88** |
| Meter Packs | **V1-T4-90** |
| Type CCV 120/240 V Tenant Main Circuit Breaker | **V1-T4-95** |
| Type CV 120/240 V Tenant Main Circuit Breaker | **V1-T4-96** |
| Meter Packs—1MP, 1MM and 3MM Main Tenant Circuit Breakers | **V1-T4-98** |
| Main Service Modules | **V1-T4-101** |
| Surge Metering | **V1-T4-115** |
| Group Metering Inline Current Transformer Cabinets | **V1-T4-116** |
| Residential Meter Stacks | |
| 1MP, 1MM and 3MM Main Tenant Circuit Breakers | **V1-T4-127** |
| Phase Balanced Stack | **V1-T4-128** |
| Commercial Meter Stack Modules | **V1-T4-129** |
| 35MM, 37MM, 35SS and 37SS Main Tenant Circuit Breakers | **V1-T4-136** |


## Residential Meter Stacks

### Features, Benefits and Functions

***A. Barrier***
Meter socket and tenant main breaker/wireway sections are separated by a solid metal barrier to guard unmetered bus against power theft.

***B. Tenant Breaker***
Reliable busbar–to–busbar connection. 200 A modules accept bolt-on breakers 60–200 A. 125 A modules accept 15–125 A plug-on breakers.

***C. Moveable Phase Connector***
Four-wire horizontal bus lets you use any 3MM module for single- or three-phase incoming service. Shipped with A and B phase connection, phase balancing is easily accomplished in the field by moving one, front-accessible phase connector post per module.

***D. Neutral Assembly***
A convenient termination for neutral conductors is in the wireway of each module.

***E. Enclosed Horizontal Bus***
Added security because a non-removable barrier encloses the 800 or 1200 A horizontal bus passing through tenant breaker section.

***F. Equipment Ground Bar***
Factory installed in side gutter, a standard feature that's moveable to the top or bottom gutter.

***G. Raintight Cap***
Shipped on each outdoor meter module and main device.

***H. Knockouts***
Tangential in bottom endwall.

***I. Superior Finish***
Rust inhibiting phosphate primer and gray baked enamel is standard. All outdoor enclosures are of galvanized steel construction.

***J. Meter Socket***
Our unique meter socket base is installed without any fasteners—reducing chances for hot spots, easily replaceable, and improves connection to vertical bus.

***K. Bus Connection***
Mains and modules slip together quickly and smoothly with front-accessible captive bolts securing the juncture without removing socket interiors or bus access plate. Main bus joint bolts torque to 25 foot pounds.

***L. Separate Wireway Cover***
Separate covers allow easy access to tenant breaker and wireway section, permit work on breakers or in wireway without disturbing meters or meter covers. (Not shown.)

***M. Vertical Busbar***
One-piece vertical busbar from phase balancing joints to meter socket eliminating any chance for hot spots.

**1MM Meter Stack Module**

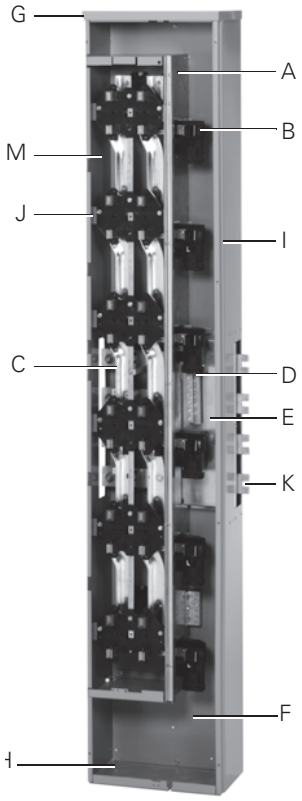

- Eaton's 1MM stacks are single-phase in, single-phase out design
- Eaton's 3MM stacks are three-phase in, single-phase out design
- Stacks with single-phase horizontal bus are rated 240/120 V, single-phase, three-wire. Stacks with three-phase horizontal bus are rated 208Y/120 V, three-phase, four-wire, but can be used on 240/120 V, three-phase, four-wire delta systems
- All three-phase horizontal bus modules have four-wire cross bus, connected A-B phase to vertical bus, readily reconnectable for phase balance on installation

**Note:** Individual sockets cannot be phase balanced, only each stack.

- Short-circuit ratings up to 100,000 A rms symmetrical depending upon AIC rating of installed main tenant circuit breakers and main device
- Main tenant feeders can exit bottom or back. Knockouts are available at all exit locations
- If being used in outdoor application and exiting the top, mount Myer type hubs on rainproof cap
- Provision for two-pole breaker (plug-on type for 125 A sockets and bolt-on type for 200 A sockets)—circuit breakers not included
- Mechanically and electrically built to bolt-up with main service modules and commercial modular metering stacks
- Aluminum or copper bus
- 800 or 1200 A horizontal bus
- All 3MM stacks include fifth jaw at 9 o'clock position
- All 1MM stacks do not include fifth jaw. Order 1MM5JK if needed

## Catalog Number Selection

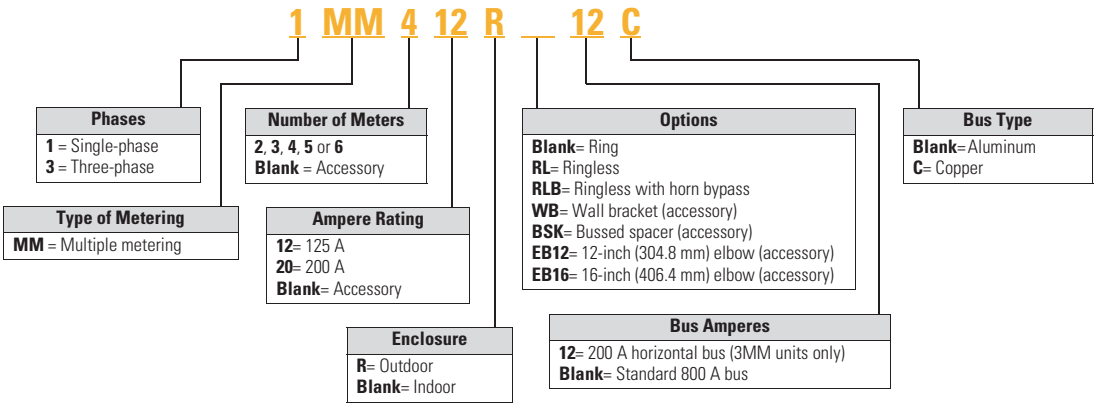


**When Ordering:**

1. Determine catalog number of Main Service Module.
2. Determine catalog number of Meter Stack (Residential or Commercial).
3. Find quantity and catalog numbers for tenant circuit breakers (found on **Page V1-T4-127** or **V1-T4-137**). Order one breaker per socket.
4. If any accessories are needed, order from **Pages V1-T4-138** and **V1-T4-139**.

## Product Selection

**1MM and 3MM Metering Stack Modules**

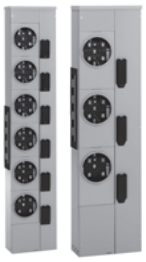

### 800 A Horizontal Aluminum Bus—Standard Offering

| Amperes Per Meter Socket | Number of Meter Sockets | Bus Ampacity | Enclosure Type ① | Main Tenant Breaker Type (For Specific Catalog Numbers, Refer to Page V1-T4-127) | Single-Phase In, Single-Phase Out<br>Single-Phase Horizontal Bus (Three Horizontal Busbars—A, B and Neutral) ②<br>Catalog Number | Three-Phase In, Single-Phase Out<br>Three-Phase Horizontal Bus (Four Horizontal Busbars—A, B, C and Neutral)<br>Catalog Number |
|---|---|---|---|---|---|---|
| **Ring Style Meter Socket Covers ③** | | | | | | |
| 125 ④ | 2 ⑤ | 800 | Indoor/outdoor | Plug-on type<br>BR2_<br>BRH2_<br>BRHH2_<br>BRX2_ | Use three-phase | **3MM212R** |
| | 3 ⑤ | 800 | Indoor/outdoor | | **1MM312R** | **3MM312R** |
| | 4 | 800 | Indoor/outdoor | | **1MM412R** | **3MM412R** |
| | 5 | 800 | Indoor/outdoor | | **1MM512R** | **3MM512R** |
| | 6 | 800 | Indoor/outdoor | | **1MM612R** | **3MM612R** |
| 200 ⑥ | 2 | 800 | Outdoor | Bolt-on type<br>CCV2_X<br>CCVH2_X<br>CVS2_XMM<br>CV2_XMM<br>CVH2_XMM | Use three-phase | **3MM220R** |
| | 3 | 800 | Outdoor | | **1MM320R** | **3MM320R** |
| | 4 | 800 | Outdoor | | **1MM420R** | **3MM420R** |
| | 5 | 800 | Outdoor | | **1MM520R** ⑦ | **3MM520R** ⑥ |
| **Ringless Style Meter Socket Covers** | | | | | | |
| 125 | 2 | 800 | Outdoor | Plug-on type<br>BR2_<br>BRH2_<br>BRHH2_<br>BRX2_ | Use three-phase | **3MM212RRL** |
| | 3 | 800 | Outdoor | | **1MM312RRL** | **3MM312RRL** |
| | 4 | 800 | Outdoor | | **1MM412RRL** | **3MM412RRL** |
| | 5 | 800 | Outdoor | | **1MM512RRL** | **3MM512RRL** |
| | 6 | 800 | Outdoor | | **1MM612RRL** | **3MM612RRL** |
| 200 | 2 | 800 | Outdoor | Bolt-on type<br>CCV2_X<br>CCVH2_X<br>CVS2_XMM<br>CV2_XMM<br>CVH2_XMM | Use three-phase | **3MM220RRL** |
| | 3 | 800 | Outdoor | | **1MM320RRL** | **3MM320RRL** |
| | 4 | 800 | Outdoor | | **1MM420RRL** | **3MM420RRL** |
| | 5 | 800 | Outdoor | | **1MM520RRL** ⑦ | **3MM520RRL** ⑥ |
| **Ringless Style Covers with Horn Bypass** | | | | | | |
| 125 | 2 | 800 | Outdoor | Plug-on type<br>BR2_<br>BRH2_<br>BRHH2_<br>BRX2_ | Use three-phase | **3MM212RRLB** |
| | 3 | 800 | Outdoor | | **1MM312RRLB** | **3MM312RRLB** |
| | 4 | 800 | Outdoor | | **1MM412RRLB** | **3MM412RRLB** |
| | 5 | 800 | Outdoor | | **1MM512RRLB** | **3MM512RRLB** |
| | 6 | 800 | Outdoor | | **1MM612RRLB** | **3MM612RRLB** |
| 200 | 2 | 800 | Outdoor | Bolt-on type<br>CCV2_X<br>CCVH2_X<br>CVS2_XMM<br>CV2_XMM<br>CVH2_XMM | Use three-phase | **3MM220RRLB** |
| | 3 | 800 | Outdoor | | **1MM320RRLB** | **3MM320RRLB** |
| | 4 | 800 | Outdoor | | **1MM420RRLB** | **3MM420RRLB** |
| | 5 | 800 | Outdoor | | **1MM520RRLB** ⑦ | **3MM520RRLB** ⑥ |

***Notes***

① For indoor applications where a top endwall with knockouts is needed, order one of part number **MM12N1WLK** for each 125 A stack or **MM20N1WLK** for each 200 A stack.
② 1MM units do not come with 5th jaw.
③ Reference drawing EUSERC DWG-G1, G2, G3.
④ To change in field from ring to ringless—order **1MMRC125**.
⑤ To change in field from ring to ringless, the top socket in 125 A, two- and three-high stacks use **1MMRC125T**. Top socket only—other sockets see ④.
⑥ To change in field from ring to ringless—order **1MMRC200**.
⑦ Check with local utility for height requirements or restrictions.

**1MM and 3MM Metering Stack Modules**

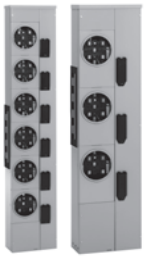

## 800 A Horizontal Copper Bus—Premium Offering

| Amperes Per Meter Socket | Number of Meter Sockets | Bus Ampacity | Enclosure Type ① | Main Tenant Breaker Type (For Specific Catalog Numbers, Refer to Page V1-T4-127) | Single-Phase In, Single-Phase Out<br>Single-Phase Horizontal Bus (Three Horizontal Busbars—A, B, C and Neutral) ②<br>Catalog Number | Three-Phase In, Single-Phase Out<br>Three-Phase Horizontal Bus (Four Horizontal Busbars—A, B, C and Neutral)<br>Catalog Number |
|---|---|---|---|---|---|---|
| **Ring Style Meter Socket Covers ③** | | | | | | |
| 125 ④ | 2 ⑤ | 800 | Outdoor | Plug-on type<br>BR2_<br>BRH2_<br>BRHH2_<br>BRX2_ | Use three-phase | **3MM212RC** |
| | 3 ⑤ | 800 | Outdoor | | **1MM312RC** | **3MM312RC** |
| | 4 | 800 | Outdoor | | **1MM412RC** | **3MM412RC** |
| | 5 | 800 | Outdoor | | **1MM512RC** | **3MM512RC** |
| | 6 | 800 | Outdoor | | **1MM612RC** | **3MM612RC** |
| 200 ⑥ | 2 | 800 | Outdoor | Bolt-on type<br>CCV2_X<br>CCVH2_X<br>CVS2_XMM<br>CV2_XMM<br>CVH2_XMM | Use three-phase | **3MM220RC** |
| | 3 | 800 | Outdoor | | **1MM320RC** | **3MM320RC** |
| | 4 | 800 | Outdoor | | **1MM420RC** | **3MM420RC** |
| | 5 | 800 | Outdoor | | **1MM520RC** ⑦ | **3MM520RC** ⑥ |
| **Ringless Style Meter Socket Covers** | | | | | | |
| 125 | 2 | 800 | Outdoor | Plug-on type<br>BR2_<br>BRH2_<br>BRHH2_<br>BRX2_ | Use three-phase | **3MM212RRLC** |
| | 3 | 800 | Outdoor | | **1MM312RRLC** | **3MM312RRLC** |
| | 4 | 800 | Outdoor | | **1MM412RRLC** | **3MM412RRLC** |
| | 5 | 800 | Outdoor | | **1MM512RRLC** | **3MM512RRLC** |
| | 6 | 800 | Outdoor | | **1MM612RRLC** | **3MM612RRLC** |
| 200 | 2 | 800 | Outdoor | Bolt-on type<br>CCV2_X<br>CCVH2_X<br>CVS2_XMM<br>CV2_XMM<br>CVH2_XMM | Use three-phase | **3MM220RRLC** |
| | 3 | 800 | Outdoor | | **1MM320RRLC** | **3MM320RRLC** |
| | 4 | 800 | Outdoor | | **1MM420RRLC** | **3MM420RRLC** |
| | 5 | 800 | Outdoor | | **1MM520RRLC** ⑦ | **3MM520RRLC** ⑥ |
| **Ringless Style Covers with Horn Bypass** | | | | | | |
| 125 | 2 | 800 | Outdoor | Plug-on type<br>BR2_<br>BRH2_<br>BRHH2_<br>BRX2_ | Use three-phase | **3MM212RRLBC** |
| | 3 | 800 | Outdoor | | **1MM312RRLBC** | **3MM312RRLBC** |
| | 4 | 800 | Outdoor | | **1MM412RRLBC** | **3MM412RRLBC** |
| | 5 | 800 | Outdoor | | **1MM512RRLBC** | **3MM512RRLBC** |
| | 6 | 800 | Outdoor | | **1MM612RRLBC** | **3MM612RRLBC** |
| 200 | 2 | 800 | Outdoor | Bolt-on type<br>CCV2_X<br>CCVH2_X<br>CVS2_XMM<br>CV2_XMM<br>CVH2_XMM | Use three-phase | **3MM220RRLBC** |
| | 3 | 800 | Outdoor | | **1MM320RRLBC** | **3MM320RRLBC** |
| | 4 | 800 | Outdoor | | **1MM420RRLBC** | **3MM420RRLBC** |
| | 5 | 800 | Outdoor | | **1MM520RRLBC** ⑦ | **3MM520RRLBC** ⑥ |

***Notes***

① For indoor applications where a top endwall with knockouts is needed, order (1) of part number **MM12N1WLK** for each 125 A stack or **MM20N1WLK** for each 200 A stack.
② 1MM units do not come with 5th jaw.
③ Reference drawing EUSERC DWG-G1, G2, G3.
④ To change in field from ring to ringless—order **1MMRC125**.
⑤ To change in field from ring to ringless, the top socket in 125 A, two- and three-high stacks use **1MMRC125T**. Top socket only—other sockets see ④.
⑥ To change in field from ring to ringless—order **1MMRC200**.
⑦ Check with local utility for height requirements or restrictions.

**1MM and 3MM Metering Stack Modules**

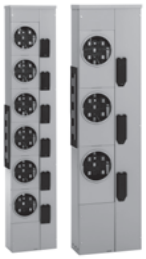



## 1200 A Horizontal Aluminum Bus—Standard Offering

| Amperes Per Meter Socket | Number of Meter Sockets | Bus Ampacity | Enclosure Type ① | Main Tenant Breaker Type (For Specific Catalog Numbers, Refer to Page V1-T4-118) | Three-Phase In, Single-Phase Out Three-Phase Horizontal Bus (Four Horizontal Busbars—A, B, C and Neutral) Catalog Number |
|---|---|---|---|---|---|
| **Ring Style Meter Socket Covers ②** | | | | | |
| 125 ③ | 2 ④ | 1200 | Indoor/outdoor | Plug-on type BR2_ BRH2_ BRHH2_ BRX2_ | **3MM212R12** |
| | 3 ④ | 1200 | Indoor/outdoor | | **3MM312R12** |
| | 4 | 1200 | Indoor/outdoor | | **3MM412R12** |
| | 5 | 1200 | Indoor/outdoor | | **3MM512R12** |
| | 6 | 1200 | Indoor/outdoor | | **3MM612R12** |
| 200 ⑤ | 2 | 1200 | Outdoor | Bolt-on type CCV2_X CCVH2_X CVS2_XMM CV2_XMM CVH2_XMM | **3MM220R12** |
| | 3 | 1200 | Outdoor | | **3MM320R12** |
| | 4 | 1200 | Outdoor | | **3MM420R12** |
| | 5 | 1200 | Indoor/outdoor | | **3MM520R12** |
| **Ringless Style Meter Socket Covers (5th Jaw at 9 o'Clock Standard—Field Adjustable to 3 or 6 o'Clock)** | | | | | |
| 125 | 2 | 1200 | Outdoor | Plug-on type BR2_ BRH2_ BRHH2_ BRX2_ | **3MM212R12RL** |
| | 3 | 1200 | Outdoor | | **3MM312R12RL** |
| | 4 | 1200 | Outdoor | | **3MM412R12RL** |
| | 5 | 1200 | Outdoor | | **3MM512R12RL** |
| | 6 | 1200 | Outdoor | | **3MM612R12RL** |
| 200 | 2 | 1200 | Outdoor | Bolt-on type CCV2_X CCVH2_X CVS2_XMM CV2_XMM CVH2_XMM | **3MM220R12RL** |
| | 3 | 1200 | Outdoor | | **3MM320R12RL** |
| | 4 | 1200 | Outdoor | | **3MM420R12RL** |
| | 5 | 1200 | Outdoor | | **3MM520R12RL** |
| **Ringless Style Covers with Horn Bypass (5th Jaw at 9 o'Clock Standard—Field Adjustable to 3 or 6 o'Clock)** | | | | | |
| 125 | 2 | 1200 | Outdoor | Plug-on type BR2_ BRH2_ BRHH2_ BRX2_ | **3MM212R12RLB** |
| | 3 | 1200 | Outdoor | | **3MM312R12RLB** |
| | 4 | 1200 | Outdoor | | **3MM412R12RLB** |
| | 5 | 1200 | Outdoor | | **3MM512R12RLB** |
| | 6 | 1200 | Outdoor | | **3MM612R12RLB** |
| 200 | 2 | 1200 | Outdoor | Bolt-on type CCV2_X CCVH2_X CVS2_XMM CV2_XMM CVH2_XMM | **3MM220R12RLB** |
| | 3 | 1200 | Outdoor | | **3MM320R12RLB** |
| | 4 | 1200 | Outdoor | | **3MM420R12RLB** |
| | 5 | 1200 | Outdoor | | **3MM520R12RLB** |

***Notes***

① 111For indoor applications where a top endwall with knockouts is needed, order (one) of part number **MM12N1WLK** for each 125 A stack or **MM20N1WLK** for each 200 A stack.

② Reference drawing EUSERC DWG-G1, G2, G3.

③ To change in field from ring to ringless—order **1MMRC125**.

④ To change in field from ring to ringless, the top socket in 125 A, two- and three-high stacks use **1MMRC125T**. Top socket only—other sockets see ③.

⑤ To change in field from ring to ringless—order **1MMRC200**.

**1MM and 3MM Metering Stack Modules**

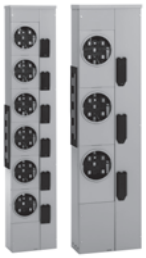

## 1200 A Horizontal Copper Bus—Premium Offering

| Amperes Per Meter Socket | Number of Meter Sockets | Bus Ampacity | Enclosure Type ① | Main Tenant Breaker Type (For Specific Catalog Numbers, Refer to Page V1-T4-118) | Three-Phase In, Single-Phase Out<br>Three-Phase Horizontal Bus (Four Horizontal Busbars—A, B, C and Neutral)<br>Catalog Number |
|---|---|---|---|---|---|
| **Ring Style Meter Socket Covers ②** | | | | | |
| 125 ③ | 2 ④ | 1200 | Indoor/outdoor | Plug-on type<br>BR2_<br>BRH2_<br>BRHH2_<br>BRX2_ | **3MM212R12C** |
| | 3 ④ | 1200 | Indoor/outdoor | | **3MM312R12C** |
| | 4 | 1200 | Indoor/outdoor | | **3MM412R12C** |
| | 5 | 1200 | Indoor/outdoor | | **3MM512R12C** |
| | 6 | 1200 | Indoor/outdoor | | **3MM612R12C** |
| 200 ⑤ | 2 | 1200 | Outdoor | Bolt-on type<br>CCV2_X<br>CCVH2_X<br>CVS2_XMM<br>CV2_XMM<br>CVH2_XMM | **3MM220R12C** |
| | 3 | 1200 | Outdoor | | **3MM320R12C** |
| | 4 | 1200 | Outdoor | | **3MM420R12C** |
| | 5 | 1200 | Outdoor | | **3MM520R12C** |
| **Ringless Style Meter Socket Covers (5th Jaw at 9 o'Clock Standard—Field Adjustable to 3 or 6 o'Clock)** | | | | | |
| 125 | 2 | 1200 | Outdoor | Plug-on type<br>BR2_<br>BRH2_<br>BRHH2_<br>BRX2_ | **3MM212R12RLC** |
| | 3 | 1200 | Outdoor | | **3MM312R12RLC** |
| | 4 | 1200 | Outdoor | | **3MM412R12RLC** |
| | 5 | 1200 | Outdoor | | **3MM512R12RLC** |
| | 6 | 1200 | Outdoor | | **3MM612R12RLC** |
| 200 | 2 | 1200 | Outdoor | Bolt-on type<br>CCV2_X<br>CCVH2_X<br>CVS2_XMM<br>CV2_XMM<br>CVH2_XMM | **3MM220R12RLC** |
| | 3 | 1200 | Outdoor | | **3MM320R12RLC** |
| | 4 | 1200 | Outdoor | | **3MM420R12RLC** |
| | 5 | 1200 | Outdoor | | **3MM520R12RLC** |
| **Ringless Style Covers with Horn Bypass (5th Jaw at 9 o'Clock Standard—Field Adjustable to 3 or 6 o'Clock)** | | | | | |
| 125 | 2 | 1200 | Outdoor | Plug-on type<br>BR2_<br>BRH2_<br>BRHH2_<br>BRX2_ | **3MM212R12RLBC** |
| | 3 | 1200 | Outdoor | | **3MM312R12RLBC** |
| | 4 | 1200 | Outdoor | | **3MM412R12RLBC** |
| | 5 | 1200 | Outdoor | | **3MM512R12RLBC** |
| | 6 | 1200 | Outdoor | | **3MM612R12RLBC** |
| 200 | 2 | 1200 | Outdoor | Bolt-on type<br>CCV2_X<br>CCVH2_X<br>CVS2_XMM<br>CV2_XMM<br>CVH2_XMM | **3MM220R12RLBC** |
| | 3 | 1200 | Outdoor | | **3MM320R12RLBC** |
| | 4 | 1200 | Outdoor | | **3MM420R12RLBC** |
| | 5 | 1200 | Outdoor | | **3MM520R12RLBC** |

## Technical Data and Specifications

### *Wire Sizes—Neutral and Ground Lugs*

- Each stack includes a neutral and ground bar
- If an extra ground bar is needed, order **1MMGBK**

### Wire Sizes—Neutral and Ground Lugs

| Lugs in Meter Socket Modules | Wire Size, Al/Cu |
|---|---|
| Branch neutral—125 A socket module | #6–2/0 kcmil |
| Branch neutral—200 A socket module | #1/0–300 kcmil |
| Equipment ground bar—125 A socket module | #14–#2 kcmil |
| Equipment ground bar—200 A socket module | #14–2/0 kcmil |
| Optional ground bar (**1MMGBK**) | #6–2/0 kcmil |

***Notes***

① For indoor applications where a top endwall with knockouts is needed, order (one) of part number **MM12N1WLK** for each 125 A stack or **MM20N1WLK** for each 200 A stack.

② Reference drawing EUSERC DWG-G1, G2, G3.

③ To change in field from ring to ringless—order **1MMRC125**.

④ To change in field from ring to ringless, the top socket in 125 A, two- and three-high stacks use **1MMRC125T**. Top socket only—other sockets see ③.

⑤ To change in field from ring to ringless—order **1MMRC200**.

## Dimensions

Approximate Dimensions in Inches (mm)

***Modular Metering Stacks—Aluminum and Copper***

### 1MM, 3MM, 125 Amperes



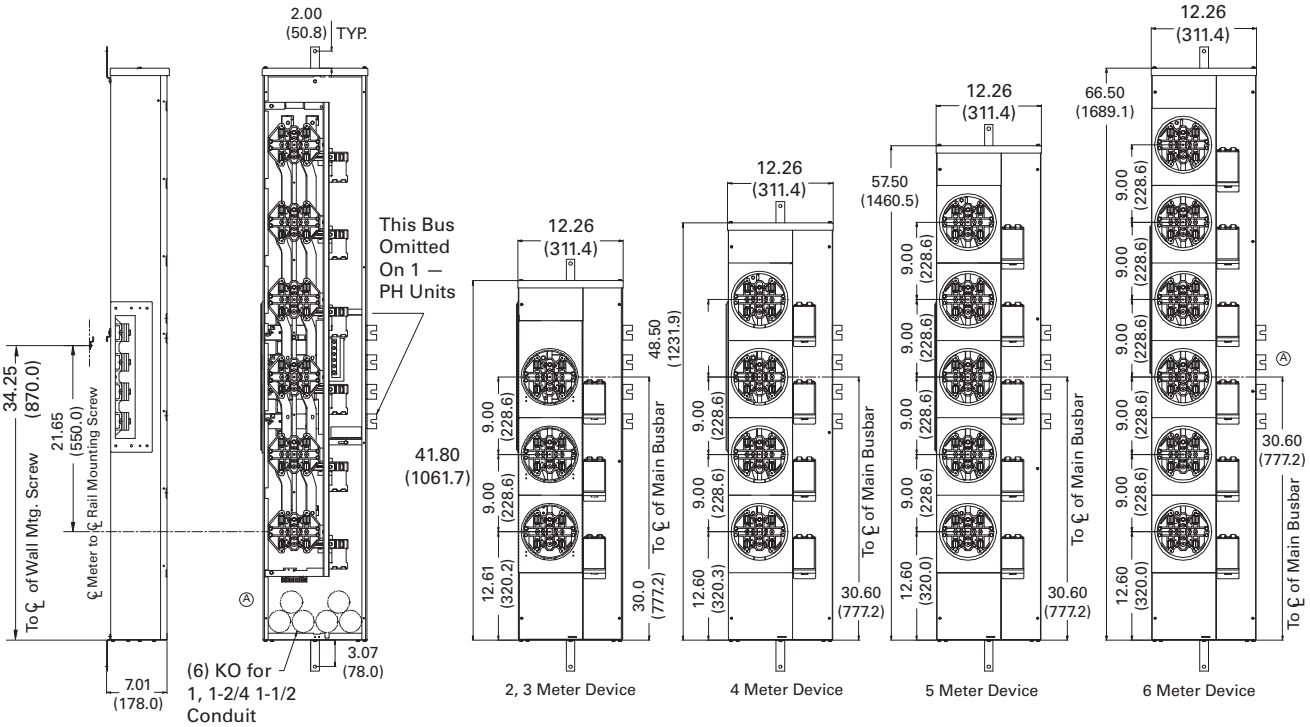


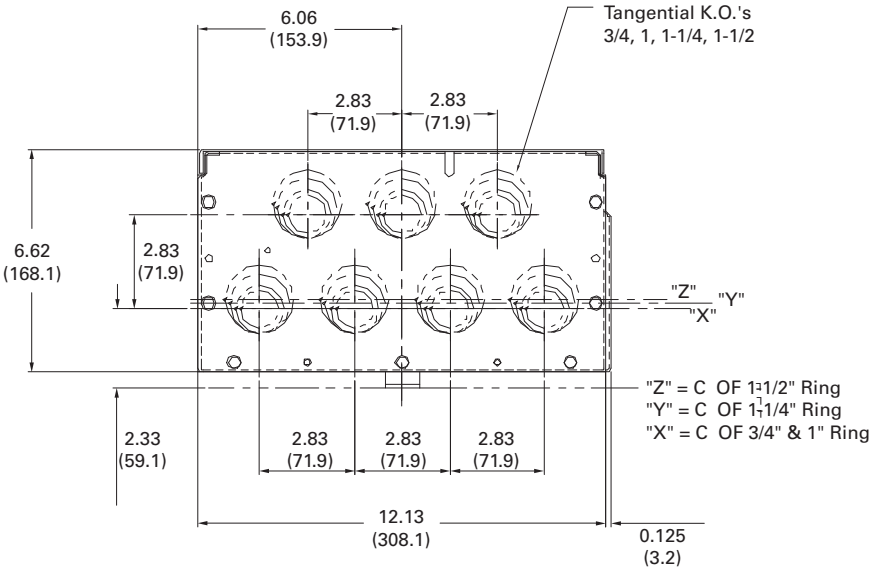


Top End & Bottom End View for NEMA 1;
Bottom End View for NEMA 3R

**Note:** Dimensions Apply to 800 and 1200 Ampere Horizontal Bus.

Approximate Dimensions in Inches (mm)

***Modular Metering Stacks—Aluminum and Copper***

### 1MM, 3MM, 200 Amperes

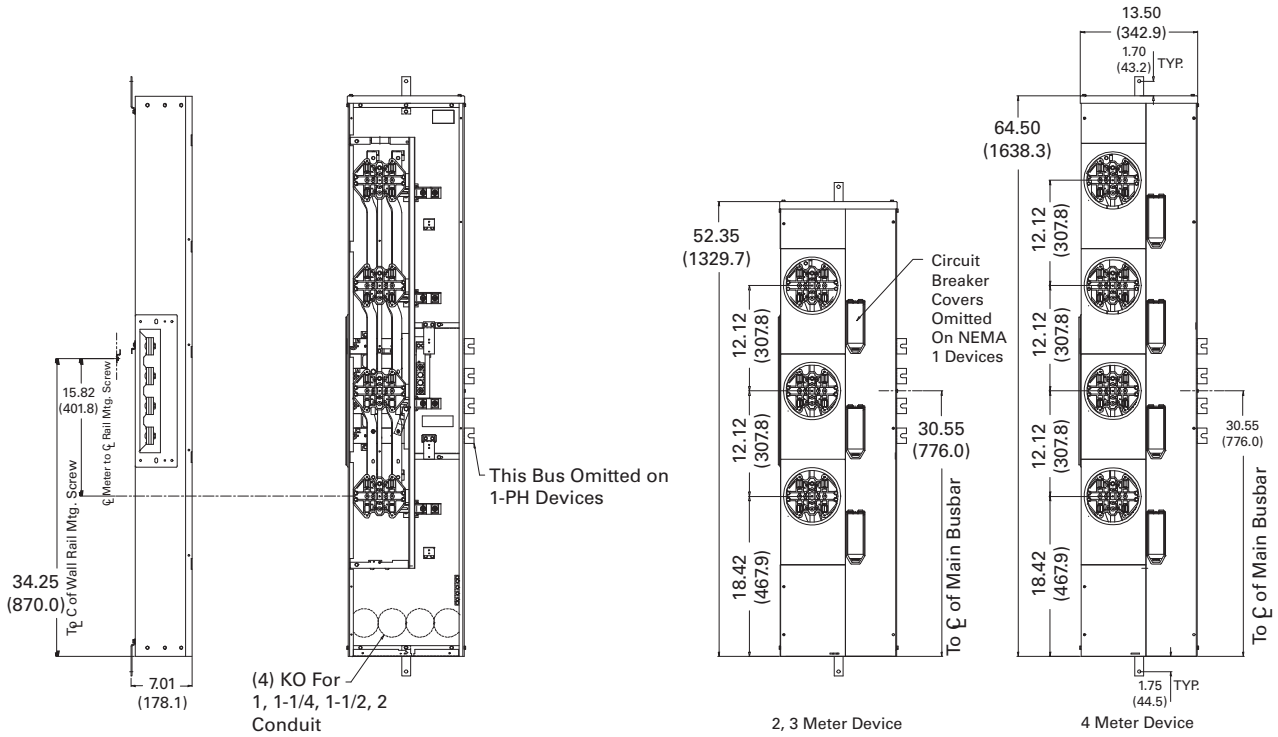


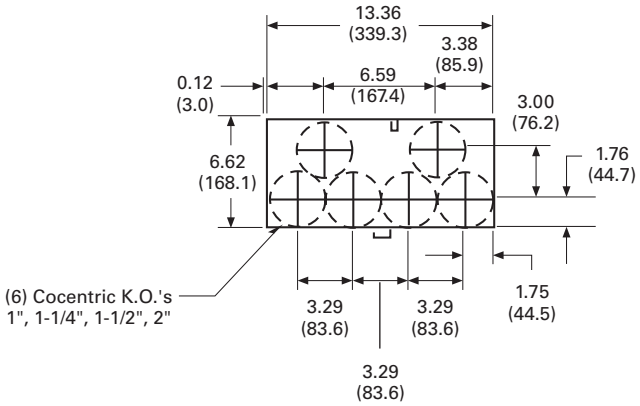


**Bottom View**

**Note:** Dimensions Apply to 800 and 1200 Ampere Horizontal Bus.

Approximate Dimensions in Inches (mm)

### 5-High, 200 Amperes, 1MM and 3MM Metering

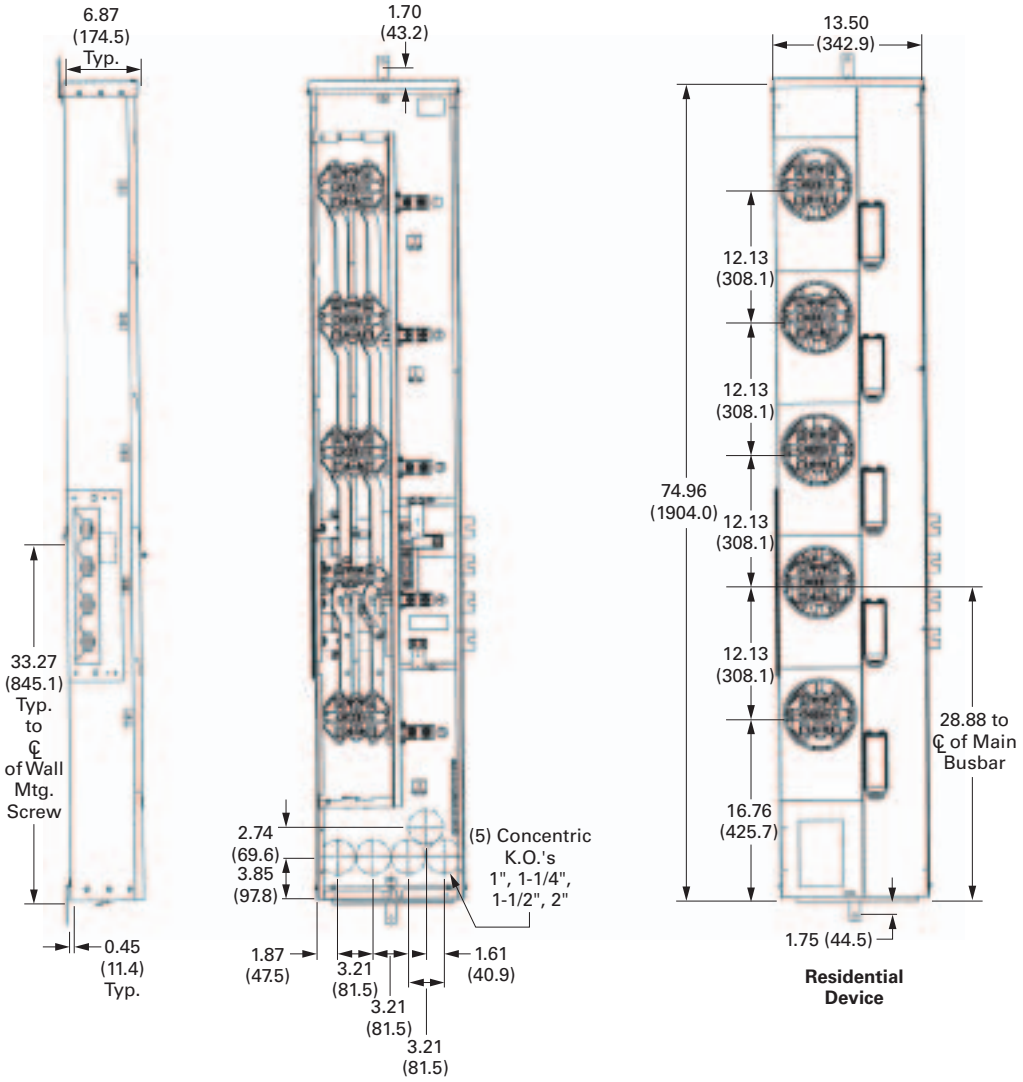


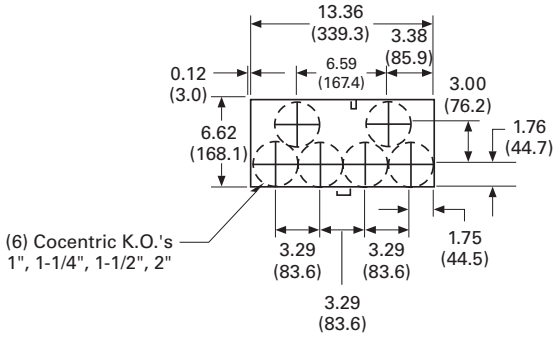


**Note:** The Bussed meter stack device shown on the far right of the figure, must be used on Mains with Busway connections, found on **Pages V1-T4-109** and **V1-T4-113**. Please contact factory for catalog numbers associated with Bussed meter stack devices.

**1MM and 3MM Metering Circuit Breakers**

*CV2200*

## Contents


| *Description* | *Page* |
|---|---|
| Systems for Residential and Commercial Applications | **V1-T4-88** |
| Meter Packs | **V1-T4-90** |
| Type CCV 120/240 V Tenant Main Circuit Breaker | **V1-T4-95** |
| Type CV 120/240 V Tenant Main Circuit Breaker | **V1-T4-96** |
| Meter Packs—1MP, 1MM and 3MM Main Tenant Circuit Breakers | **V1-T4-98** |
| Main Service Modules | **V1-T4-101** |
| Surge Metering | **V1-T4-115** |
| Group Metering Inline Current Transformer Cabinets | **V1-T4-116** |
| Residential Meter Stacks | **V1-T4-118** |
| 1MP, 1MM and 3MM Main Tenant Circuit Breakers | |
| Phase Balanced Stack | **V1-T4-128** |
| Commercial Meter Stack Modules | **V1-T4-129** |
| 35MM, 37MM, 35SS and 37SS Main Tenant Circuit Breakers | **V1-T4-136** |




## 1MP, 1MM and 3MM Main Tenant Circuit Breakers

### Product Description

Specific main tenant circuit breakers that are to be used in meter packs (1MP), residential meter stacks (1MM) and three-phase in single-phase out meter stacks (3MM).

### Product Selection

| Description | Number of Poles | Main Tenant Circuit Breaker Ampere Rating | 10 kAIC Catalog Number ① | 22 kAIC Catalog Number | 25 kAIC Catalog Number ①②③④ | 42 kAIC Catalog Number ②③④ | 65 kAIC Catalog Number ②③④ | 100 kAIC Catalog Number ②③④ |
|---|---|---|---|---|---|---|---|---|
| **Plug-On Type** | | | | | | | | |
| Plug-on type circuit breakers used with 1MP, 1MM, and 3MM 125 A modular metering stacks | 2 | 60 | **BR260** | **BRH260** | — | **BRHH260** | **BRX260** | — |
| | 2 | 70 | **BR270** | **BRH270** | — | **BRHH270** | **BRX270** | — |
| | 2 | 80 | **BR280** | **BRH280** | — | **BRHH280** | **BRX280** | — |
| | 2 | 90 | **BR290** | **BRH290** | — | **BRHH290** | **BRX290** | — |
| | 2 | 100 | **BR2100** | **BRH2100** | — | **BRHH2100** | **BRX2100** | — |
| | 2 | 110 | **BR2110** | **BRH2110** | — | **BRHH2110** | **BRX2110** | — |
| | 2 | 125 | **BR2125** | **BRH2125** | — | **BRHH2125** | **BRX2125** | — |
| **Bolt-On Type** | | | | | | | | |
| Bolt-on type circuit breakers used with 1MP, 1MM, and 3MM 200 A modular metering stacks | 2 | 60 | **CCV2060X** | **CCVH2060X** | **CVS2060XMM** | **CVS2060XMM** | **CV2060XMM** | **CVH2060XMM** |
| | 2 | 70 | **CCV2070X** | **CCVH2070X** | **CVS2070XMM** | **CVS2070XMM** | **CV2070XMM** | **CVH2070XMM** |
| | 2 | 80 | **CCV2080X** | **CCVH2080X** | **CVS2080XMM** | **CVS2080XMM** | **CV2080XMM** | **CVH2080XMM** |
| | 2 | 90 | **CCV2090X** | **CCVH2090X** | **CVS2090XMM** | **CVS2090XMM** | **CV2090XMM** | **CVH2090XMM** |
| | 2 | 100 | **CCV2100X** | — | **CCVH2100X** | **CVS2100XMM** | **CV2100XMM** | **CVH2100XMM** |
| | 2 | 125 | **CCV2125X** | — | **CCVH2125X** | **CVS2125XMM** | **CV2125XMM** | **CVH2125XMM** |
| | 2 | 150 | **CCV2150X** | — | **CCVH2150X** | **CVS2150XMM** | **CV2150XMM** | **CVH2150XMM** |
| | 2 | 175 | **CCV2175X** | — | **CCVH2175X** | **CVS2175XMM** | **CV2175XMM** | **CVH2175XMM** |
| | 2 | 200 | **CCV2200X** | — | **CCVH2200X** | **CVS2200XMM** | **CV2200XMM** | **CVH2200XMM** |

***Notes***

① #2–300 kcmil wire size range for CCV and CCVH tenant main circuit breakers.
② "MM" suffix indicates mounting hardware kit is included as standard with tenant main breaker.
③ 1MMCBK replacement mounting hardware kit. One kit is needed per breaker. Mounting hardware kit ships standard with breaker "MM" suffix offering.
④ #6–4/0 kcmil wire size range for CVS, CV and CVH tenant main circuit breakers. If #2–300 kcmil is needed, order 2TA225CVK. One kit needed per breaker.

## Contents


| *Description* | *Page* |
|---|---|
| Systems for Residential and Commercial Applications | **V1-T4-88** |
| Meter Packs | **V1-T4-90** |
| Type CCV 120/240 V Tenant Main Circuit Breaker | **V1-T4-95** |
| Type CV 120/240 V Tenant Main Circuit Breaker | **V1-T4-96** |
| Meter Packs—1MP, 1MM and 3MM Main Tenant Circuit Breakers | **V1-T4-98** |
| Main Service Modules | **V1-T4-101** |
| Surge Metering | **V1-T4-115** |
| Group Metering Inline Current Transformer Cabinets | **V1-T4-116** |
| Residential Meter Stacks | **V1-T4-118** |
| 1MP, 1MM and 3MM Main Tenant Circuit Breakers | **V1-T4-127** |
| Phase Balanced Stack Commercial Meter Stack Modules | **V1-T4-129** |
| 35MM, 37MM, 35SS and 37SS Main Tenant Circuit Breakers | **V1-T4-136** |


## Phase Balanced Stack

### Product Description

Eaton's Phase Balanced Stack allows for a complete phase balanced metering line-up using fewer stacks. With today's electrical rooms becoming smaller, the need is greater than ever to offer space-saving metering products while providing a fully phase balanced system. The new phase balanced stack is the answer.

Today, achieving a phase balanced system when connected to a 208Y/120 Vac three-phase, four-wire system may require one or two additional 3MM meter modules. Standard 3MM meter stacks come factory connected to phases A and B. The new phase balanced stacks connect the two bottom meters to phases B and C and the top two or three meters to phases A and C. Using these new stacks with the AB phased 3MM metering, phase balancing is accomplished, and more compact than before.

### Features

- Available in four- and five-high configurations at 125 A
- 200 A stacks available
- Available with 800 A aluminum bus and 1200 A copper bus
- Ring, ringless, ringless with horn bypass available
- Outdoor enclosure
- Dimensions same as existing 125 A, three-phase meter stacks

### Product Selection

***Ordering Information***

- Check with local utility for height restrictions
- Items loaded in VISTA
- If you have questions, please contact the Technical Resource Center 1-800-356-1243, option 3

#### Phase Balanced Stack

| Amperes Per Meter Socket | Bus Ampacity | Meter Socket Cover | Catalog Number |
|---|---|---|---|
| 125 | 800 | Ring | **3MM412RACBC** |
| 125 | 800 | Ring | **3MM512RACBC** |
| 125 | 800 | Ringless | **3MM412RRLACBC** |
| 125 | 800 | Ringless | **3MM512RRLACBC** |
| 125 | 800 | Ringless horn bypass | **3MM412RRLBACBC** |
| 125 | 800 | Ringless horn bypass | **3MM512RRLBACBC** |
| 125 | 1200 | Ring | **3MM412R2ACBC** |
| 125 | 1200 | Ring | **3MM512R2ACBC** |
| 125 | 1200 | Ringless | **3MM412R2RLACBC** |
| 125 | 1200 | Ringless | **3MM512R2RLACBC** |
| 125 | 1200 | Ringless horn bypass | **3MM412R2RLBACBC** |
| 125 | 1200 | Ringless horn bypass | **3MM512R2RLBACBC** |

**Note:** Local codes and utility requirements still apply. The phase balance stacks are not suitable for changing in the field.

Commercial Meter Stack Modules (35MM, 37MM, 35SS and 37SS)

*35MM, 37MM, 35SS and 37SS*

## Contents


| *Description* | *Page* |
|---|---|
| Systems for Residential and Commercial Applications | **V1-T4-88** |
| Meter Packs | **V1-T4-90** |
| Type CCV 120/240 V Tenant Main Circuit Breaker | **V1-T4-95** |
| Type CV 120/240 V Tenant Main Circuit Breaker | **V1-T4-96** |
| Meter Packs—1MP, 1MM and 3MM Main Tenant Circuit Breakers | **V1-T4-98** |
| Main Service Modules | **V1-T4-101** |
| Surge Metering | **V1-T4-115** |
| Group Metering Inline Current Transformer Cabinets | **V1-T4-116** |
| Residential Meter Stacks | **V1-T4-118** |
| 1MP, 1MM and 3MM Main Tenant Circuit Breakers | **V1-T4-127** |
| Phase Balanced Stack | **V1-T4-128** |
| Commercial Meter Stack Modules 35MM, 37MM, 35SS and 37SS Main Tenant Circuit Breakers | **V1-T4-136** |




## Commercial Meter Stack Modules

### Product Description

- Heavy-duty lever bypass socket design
- Single-phase or three-phase designs (35 = single-phase, 37 = three-phase)
- Provision for two-pole or three-pole main tenant breakers
- Phase balance kits are included with three-high and four-high modules

### Features, Benefits and Functions

***A. End Walls***

The top cap is removable and does not contain knockouts, so contractors can position and punch holes where they need them. There are numerous KOs in the back and bottom for flexibility.

***B. Ground Bars***

The factory-installed equipment ground bars are provided in both the top and bottom gutters.

***C. Meter Socket***

The 5-jaw meter socket and 7-jaw meter socket includes a built-in manual bypass and jaw release. The ground wire is factory connected in both 35MM and 37MM modules.

***D. Separate Wireway Cover***

If work on the breakers or cables is necessary, it can be accomplished without disturbing the meters or meter covers, thanks to a separate cover that allows easy access to the module's main tenant breaker and wireway section. (Not shown.)

***E. Barrier***

A solid metal barrier separates the meter socket section from the tenant breaker in the wireway section. The unmetered vertical bus is enclosed to guard against power theft.

***F. Neutral Assembly***

Located in the wireway of each module, the assembly permits convenient termination of the neutral conductors.

***G. Enclosed Horizontal Bus***

Non-removable metal barrier encloses 1200 A horizontal bus when passing through the tenant breaker section for added security.

***H. Tenant Breaker Range***

All modules accept 15–225 A bolt-on breakers in various AIC ratings. The CHH_X breaker carries a UL listed series rating of 100,000 A, which allows you to use standard 10 kAIC breakers in downstream loadcenters and panelboards by Eaton.

***I. Indoor/Outdoor Construction***

Raintight caps, meter covers and lockable raintight tenant breaker covers make it convenient for you to use any of our modules on either NEMA 1 or NEMA 3R applications.

***J. Mounting Rail***

Rear mounting rail and wall hanger speed and simplify installation. (Mounting rail not shown.)

***K. Nameplate and Ratings***

The nameplate gives you full rating data: 208Y/120, three-phase, four-wire; 240/120, three-phase, four-wire delta (high leg on B-phase); and 240/120 single-phase. (Not shown.)

***L. Mains and Modules***

Slip together quickly, smoothly with front-accessible captive bolts securing the juncture without removing socket interiors or bus access plate. Main bus joint bolts torque to 25 foot pounds.

### 37MM Meter Stack Module

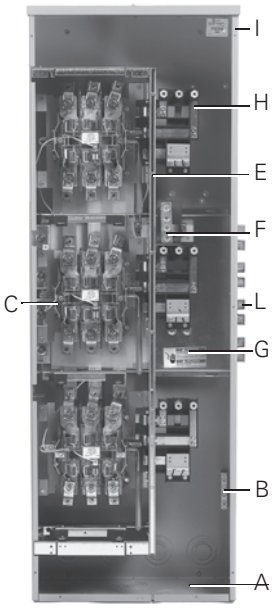


- Eaton's 35MM and 37MM modular metering stacks contain meter sockets with built-in manual bypass and jaw release (Non-EUSERC areas)
- Eaton's 35SS and 37SS stacks use meter sockets with test bypass feature (meets EUSERC electrical requirements)
- All commercial modular metering stacks contain four horizontal cross buses
- Mechanically and electrically built to bolt-up with main service modules and residential modular metering stacks

## Catalog Number Selection

### Commercial Meter Stack Modules

**3 7 MM 1 40 R 12 40 K C**

**Phases**
Three-phase only

**Number of Jaws**
**5** or **7**

**Type of Metering**
**MM** = Commercial metering module
**SS** = Safety socket—EUSERC

**Number of Meters**
**1**, **2**, **3** or **4**

**Socket Amperage**
**20** = 200 A
**40** = 400 A

**Enclosure**
**R** = NEMA 3R

**Bus**
**12** = 1200 A main bus ampacity
**AB** = Phases A&B—EUSERC
**AC** = Phases A&C—EUSERC
**BC** = Phases B&C—EUSERC

**Tenant Breakers**
**40** = 400 A included
**Blank** = Ordered separately

**Socket Type**
**K** = K Base bolt-on socket
**Blank** = Plug-in type socket

**Bus**
**C** = Copper
**Blank** = Aluminum

**When Ordering:**

1. Determine catalog number of Main Service Module.
2. Determine catalog number of Meter Stack (Residential or Commercial).
3. Find quantity and catalog numbers for tenant circuit breakers (found on **Page V1-T4-136**). Order one breaker per socket.
4. If any accessories are needed, order from **Pages V1-T4-138** and **V1-T4-139**.

## Product Selection

### *35MM*

- Each socket is a 5 terminal block with lever bypass and jaw release
- Ringless covers
- Provision for two-pole main tenant breakers (circuit breakers not included). For circuit breaker catalog numbers, refer to **Page V1-T4-136**
- Phase balancing kits are included with three-high and four-high modules. Each individual socket can be phase balanced in the field to the desired lines (A-B, B-C or A-C). Comes from factory as A-B
- Indoor/outdoor construction
- Main tenant feeders can exit top, bottom or back
- If being used in outdoor application and exiting the top, mount Myer type hubs on rainproof cap
- Short-circuit ratings up to 100 A rms symmetrical depending upon the kAIC rating of installed main tenant circuit breakers and main device
- Non-EUSERC areas

### 35MM—Single-Phase Commercial Meter Stack Modules (Three-Phase In, Single-Phase Out)

| System Voltage | Ampere Rating Per Meter Socket | Number of Meter Sockets | Horizontal Bus Ampacity/ Material | Number of Jaws Per Meter Socket | Main Tenant Breaker Type (Page V1-T4-136) ① | Catalog Number |
|---|---|---|---|---|---|---|
| 120/240 V, single-phase, three-wire systems and 208Y/120 V network metering (Not suitable for use on three-phase, four-wire delta systems) | 225 | 1 | 1200 Al | 5 | Bolt-on type EHD2_ CCV2_X CCVH2_X CVS2_XMM CV2_XMM CVH2_XMM | **35MM120R12** |
| | | 1 | 1200 Cu | 5 | | **35MM120R12C** |
| | | 2 | 1200 Al | 5 | | **35MM220R12** |
| | | 2 | 1200 Cu | 5 | | **35MM220R12C** |
| | | 3 | 1200 Al | 5 | | **35MM320R12** |
| | | 3 | 1200 Cu | 5 | | **35MM320R12C** |
| | | 4 | 1200 Al | 5 | | **35MM420R12** |
| | | 4 | 1200 Cu | 5 | | **35MM420R12C** |
| | 400 | 1 | 1200 Al | 5 | 400 A K-Frame included | **35MM140R1240** ② |
| | | 1 | 1200 Cu | 5 | | **35MM140R1240C** ② |
| | 400 | 1 | 1200 Al | 5 | 400 A K-Frame included | **35MM140HR1240** ③ |
| | | 1 | 1200 Cu | 5 | | **35MM140HR1240C** ③ |
| | 400 | 2 | 1200 Al | 5 | 400 A K-Frame included | **35MM240R1240** |
| | | 2 | 1200 Cu | 5 | | **35MM240R1240C** |
| | 400 continuous | 1 | 1200 Cu | 5 | 400 A L-Frame included | **35MM140R1240K** |
| | 400 continuous | 1 | 1200 Cu | 5 | 400 A L-Frame included | **35MM140HR1240KC** ④ |

***Notes***

① Retrofit tenant circuit breaker mounting kit (**37MMRCBK**) for installation of Type EHD and CV breakers. Needed only for stacks manufactured prior to February 2013. Order one kit per breaker.
② Unit is bottom exit only.
③ Rated at 100 kAIC.
④ Rated at 35 kAIC.

***37MM***

- Each socket is a 7 terminal block with lever bypass and jaw release
- Ringless covers
- Provision for three-pole main tenant breakers (circuit breakers not included). For circuit breaker catalog numbers, refer to **Page V1-T4-136**
- Indoor/outdoor construction
- Main tenant breakers can exit top, bottom or back
- If being used in outdoor application and exiting the top, mount Myer type hubs on rainproof cap
- Short-circuit ratings up to 100 A rms symmetrical depending upon the kAIC rating of installed main tenant circuit breakers and main device
- Non-EUSERC areas

## 37MM—Three-Phase Commercial Meter Stack Modules (Three-Phase In, Three-Phase Out)

| System Voltage | Ampere Rating Per Meter Socket | Number of Meter Sockets | Horizontal Bus Ampacity/ Material | Number of Jaws Per Meter Socket ① | Main Tenant Breaker Type ② (Page V1-T4-136) | Catalog Number |
|---|---|---|---|---|---|---|
| 208Y/120 V, three-phase, four-wire<br>240/120 V, three-phase, four-wire delta<br>(B-phase is high leg) | 225 | 1 | 1200 Al | 7 | Bolt-on type<br>EHD3_<br>CC3_X<br>CVS3_X<br>CV3_X<br>CVH3_X | **37MM120R12** |
| | | 1 | 1200 Cu | 7 | | **37MM120R12C** |
| | | 2 | 1200 Al | 7 | | **37MM220R12** |
| | | 2 | 1200 Cu | 7 | | **37MM220R12C** |
| | | 3 | 1200 Al | 7 | | **37MM320R12** |
| | | 3 | 1200 Cu | 7 | | **37MM320R12C** |
| | | 4 | 1200 Al | 7 | | **37MM420R12** |
| | | 4 | 1200 Cu | 7 | | **37MM420R12C** |
| | 400 | 1 | 1200 Al | 7 | Bolt-on type<br>EHD3_<br>CC3_X<br>CVS3_X<br>CV3_X<br>CVH3_X | **37MM140R12** ③ |
| | | 1 | 1200 Cu | 7 | | **37MM140R12C** ③ |
| | 400 | 1 | 1200 Al | 7 | 400 A<br>K-Frame included | **37MM140R1240** ④ |
| | | 1 | 1200 Cu | 7 | | **37MM140R1240C** ④ |
| | 400 | 1 | 1200 Al | 7 | 400 A<br>K-Frame included | **37MM140HR1240** ⑤ |
| | | 1 | 1200 Cu | 7 | | **37MM140HR1240C** ⑤ |
| | 400 | 2 | 1200 Al | 7 | 400 A<br>K-Frame included | **37MM240R1240** |
| | | 2 | 1200 Cu | 7 | | **37MM240R1240C** |
| | 400 continuous | 1 | 1200 Cu | 7 | 400 A<br>L-Frame included | **37MM140R1240KC** ⑥ |
| | 400 continuous | 1 | 1200 Cu | 7 | 400 A<br>L-Frame included | **37MM140HR1240KC** ⑦ |

***Notes***

① If a socket in a 37MM meter stack module needs to be single-phase, order **37MM1CK**. This will convert the three-phase socket to single-phase.
② Retrofit tenant circuit breaker mounting kit (**37MMRCBK**) for installation of Type EHD and CV breakers. Needed only for stacks manufactured prior to February 2013. Order one kit per breaker.
③ 320 A continuous rated socket with provisions for two main tenant breakers.
④ Unit is bottom exit only.
⑤ Rated at 100 kAIC.
⑥ Rated at 25 kAIC.
⑦ Rated at 35 kAIC.

### *35SS*

- Sockets include EUSERC required test-bypass-disconnect feature
- Ring type covers
- Single-phase units have provisions for two-pole main tenant breakers
- When applying 35SS (single-phase) stacks on 208Y/120 V, three-phase, four-wire and 240/120 V, three-phase, four-wire delta systems, refer to suffixes for proper phase balancing. Each meter stack module is phase balanced at the plant (A-B, B-C or A-C) and cannot be field modified
- Indoor/outdoor construction
- Main tenant breakers can exit top, bottom or back. If being used in outdoor application and exiting the top, mount Myer type hubs on rainproof cap
- Short-circuit ratings up to 100 A rms symmetrical depending upon the kAIC rating of installed main tenant circuit breakers and main device

**35SS_**

### 35SS—Three-Phase Commercial Meter Stack Modules ①

| System Voltage | Ampere Rating Per Meter Socket | Number of Meter Sockets | Horizontal Bus Ampacity/ Material | Number of Jaws Per Meter Socket | Main Tenant Breaker Type ② (Page V1-T4-136) | Catalog Number |
|---|---|---|---|---|---|---|
| 120/240 V, single-phase, three-wire systems and 208Y/120 V network metering (Not suitable for use on three-phase, four-wire delta systems) | 225 | 1 | 1200 Al | 5 | Bolt-on type EHD2_ CCV2_X CCVH2_X CVS2_X CV2_X CVH2_X | **35SS120RAB** ③ |
| | | | 1200 Cu | 5 | | **35SS120RABC** ③ |
| | | | 1200 Al | 5 | | **35SS120RAC** ③ |
| | | | 1200 Cu | 5 | | **35SS120RACC** ③ |
| | | | 1200 Al | 5 | | **35SS120RBC** ③ |
| | | | 1200 Cu | 5 | | **35SS120RBCC** ③ |
| | | 2 | 1200 Al | 5 | | **35SS220RAB** ③ |
| | | | 1200 Cu | 5 | | **35SS220RABC** ③ |
| | | | 1200 Al | 5 | | **35SS220RAC** ③ |
| | | | 1200 Cu | 5 | | **35SS220RACC** ③ |
| | | | 1200 Al | 5 | | **35SS220RBC** ③ |
| | | | 1200 Cu | 5 | | **35SS220RBCC** ③ |
| | | 3 | 1200 Al | 5 | | **35SS320RAB** ③ |
| | | | 1200 Cu | 5 | | **35SS320RABC** ③ |
| | | | 1200 Al | 5 | | **35SS320RAC** ③ |
| | | | 1200 Cu | 5 | | **35SS320RACC** ③ |
| | | | 1200 Al | 5 | | **35SS320RBC** ③ |
| | | | 1200 Cu | 5 | | **35SS320RBCC** ③ |

### *37SS*

- Sockets include EUSERC required test-bypass-disconnect feature
- Ring type covers
- Three-phase units have provisions for three-pole main tenant breaker
- Aluminum horizontal bus supplied as standard

### 37SS—Three-Phase Commercial Meter Stack Modules ①

| System Voltage | Ampere Rating Per Meter Socket | Number of Meter Sockets | Horizontal Bus Ampacity/ Material | Number of Jaws Per Meter Socket | Main Tenant Breaker Type ② (Page V1-T4-136) | Catalog Number |
|---|---|---|---|---|---|---|
| 208Y/120 V, three-phase, four-wire 240/120 V, three-phase, four-wire delta (B-phase is high leg) | 225 | 1 | 1200 Al | 7 | Bolt-on type EHD3_ CC3_X CVS3_X CV3_X CVH3_X | **37SS120R** |
| | | | 1200 Cu | 7 | | **37SS120RC** |
| | | 2 | 1200 Al | 7 | | **37SS220R** |
| | | | 1200 Cu | 7 | | **37SS220RC** |
| | | 3 | 1200 Al | 7 | | **37SS320R** |
| | | | 1200 Cu | 7 | | **37SS320RC** |

***Notes***

① Reference drawing EUSERC DWG-304 for 100 A; Reference drawing EUSERC DWG-305 for 200 A.

② Retrofit tenant circuit breaker mounting kit (**37MMRCBK**) for installation of Type EHD and CV breakers. Needed only for stacks manufactured prior to February 2013. Order one kit per breaker.

③ Last two digits of catalog number indicate phase balancing (AB indicates all sockets in this stack are connected to phases A and B only).

Approximate Dimensions in Inches (mm)

***Commercial Stacks (35MM and 37MM)***

### 35MM and 37MM



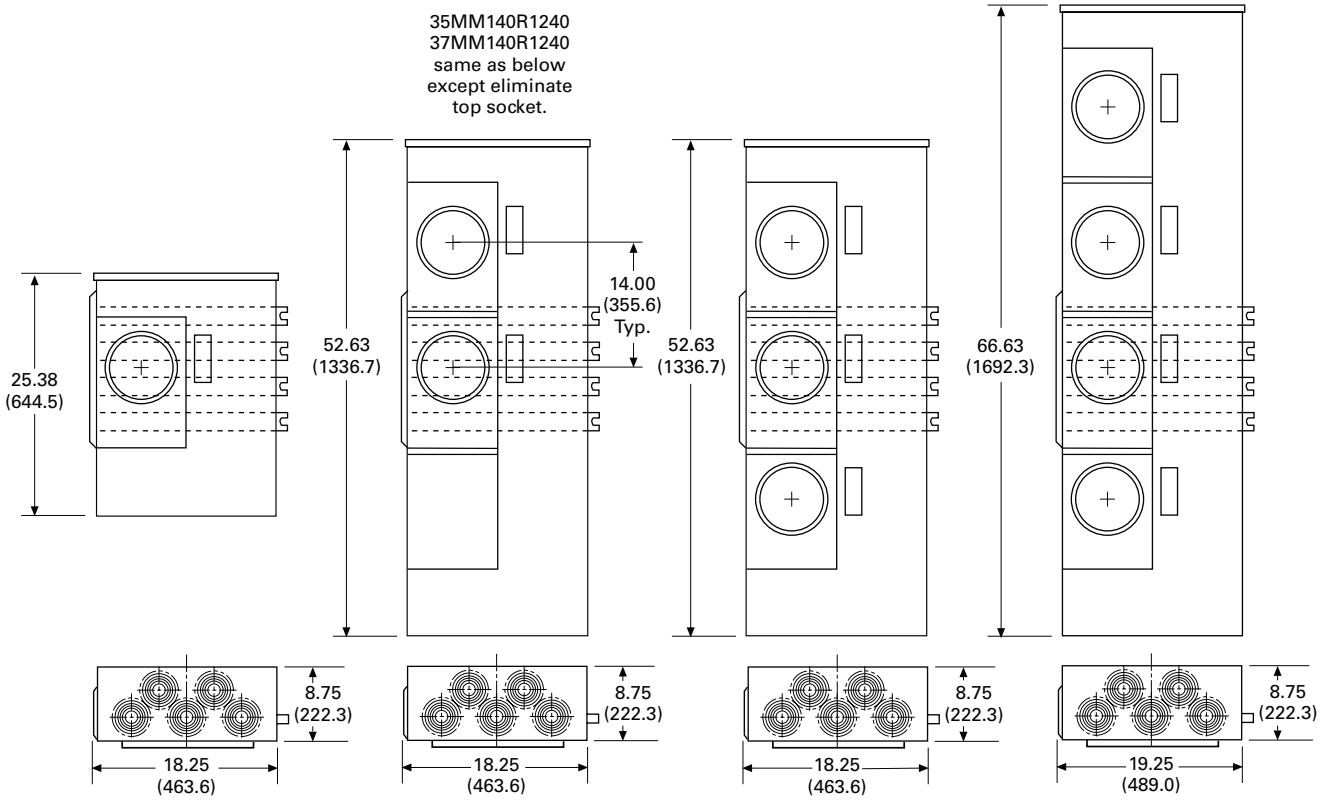

Approximate Dimensions in Inches (mm)

***Commercial Stacks (35SS and 37SS)***

### 35SS and 37SS

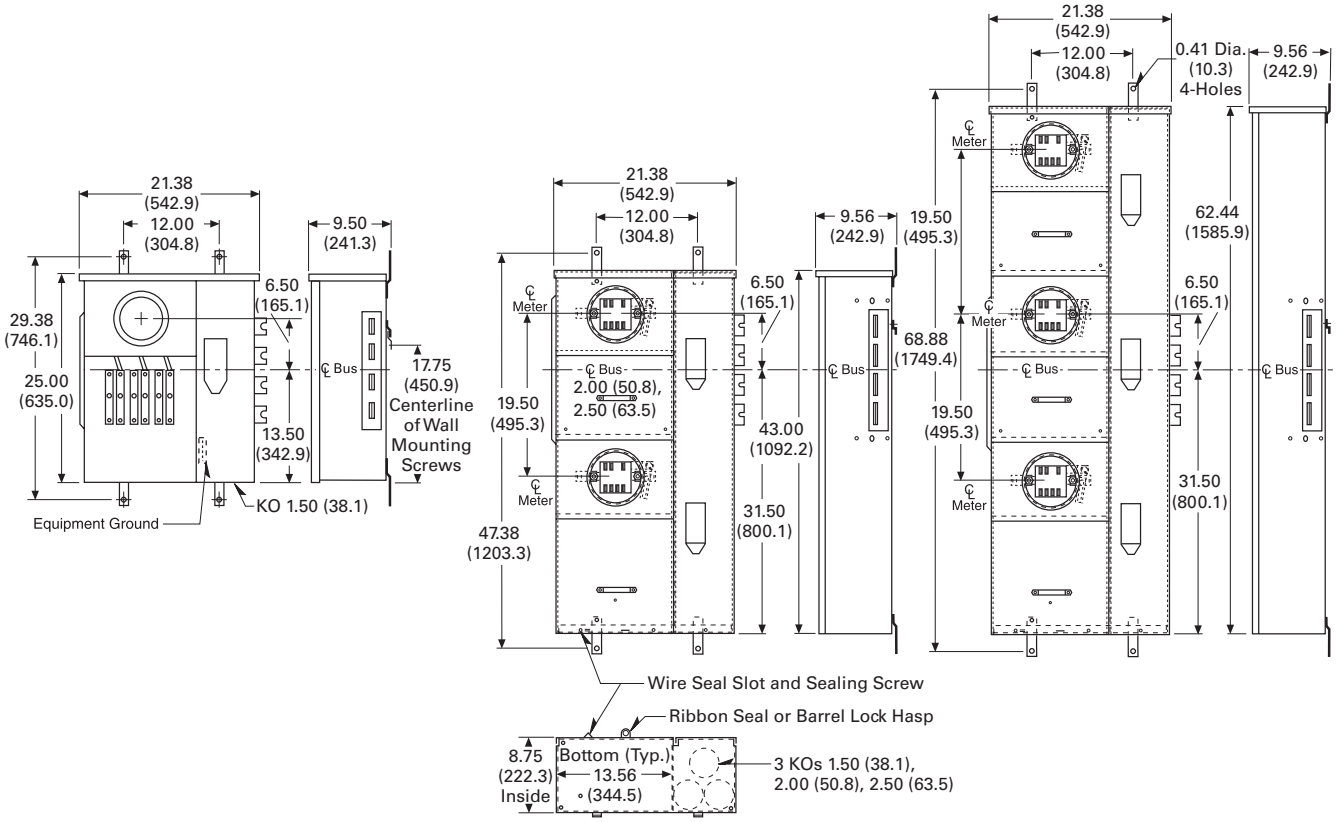

35MM, 37MM, 35SS and 37SS Main Tenant Circuit Breakers

*CV2200/CV3200*

## Contents


| *Description* | *Page* |
|---|---|
| Systems for Residential and Commercial Applications | **V1-T4-88** |
| Meter Packs | **V1-T4-90** |
| Type CCV 120/240 V Tenant Main Circuit Breaker | **V1-T4-95** |
| Type CV 120/240 V Tenant Main Circuit Breaker | **V1-T4-96** |
| Meter Packs—1MP, 1MM and 3MM Main Tenant Circuit Breakers | **V1-T4-98** |
| Main Service Modules | **V1-T4-101** |
| Surge Metering | **V1-T4-115** |
| Group Metering Inline Current Transformer Cabinets | **V1-T4-116** |
| Residential Meter Stacks | **V1-T4-118** |
| 1MP, 1MM and 3MM Main Tenant Circuit Breakers | **V1-T4-127** |
| Phase Balanced Stack | **V1-T4-128** |
| Commercial Meter Stack Modules | **V1-T4-129** |
| 35MM, 37MM, 35SS and 37SS Main Tenant Circuit Breakers | |


## 35MM, 37MM, 35SS and 37SS Main Tenant Circuit Breakers

### Product Description

- The following breakers are to be used on 35MM, 37MM, 35SS and 37SS modular metering stacks
- Series rating information available on **Pages V1-T4-144** through **V1-T4-147**
- Two-pole breakers are 120/240 Vac, field installed
- Three-pole breakers are 208Y/120 Vac, field installed

## Product Selection

### 35MM, 37MM, 35SS and 37SS Main Tenant Circuit Breakers

| Description | Number of Poles | Main Tenant Circuit Breaker Ampere Rating | 10 kAIC Catalog Number | 25 kAIC Catalog Number ①② | 42 kAIC Catalog Number ①② | 65 kAIC Catalog Number ①② | 100 kAIC Catalog Number ①② |
|---|---|---|---|---|---|---|---|
| **Bolt-On Type** | | | | | | | |
| Bolt-on type circuit breakers used with 35MM and 35SS (single-phase modular metering stacks) ③④ | 2 | 60 | **CCV2060X** | **CCVH2060X** | **CVS2060XMM** | **CV2060XMM** | **CVH2060XMM** |
| | 2 | 70 | **CCV2070X** | **CCVH2070X** | **CVS2070XMM** | **CV2070XMM** | **CVH2070XMM** |
| | 2 | 80 | **CCV2080X** | **CCVH2080X** | **CVS2080XMM** | **CV2080XMM** | **CVH2080XMM** |
| | 2 | 90 | **CCV2090X** | **CCVH2090X** | **CVS2090XMM** | **CV2090XMM** | **CVH2090XMM** |
| | 2 | 100 | **CCV2100X** | **CCVH2100X** | **CVS2100XMM** | **CV2100XMM** | **CVH2100XMM** |
| | 2 | 125 | **CCV2125X** | **CCVH2125X** | **CVS2125XMM** | **CV2125XMM** | **CVH2125XMM** |
| | 2 | 150 | **CCV2150X** | **CCVH2150X** | **CVS2150XMM** | **CV2150XMM** | **CVH2150XMM** |
| | 2 | 175 | **CCV2175X** | **CCVH2175X** | **CVS2175XMM** | **CV2175XMM** | **CVH2175XMM** |
| | 2 | 200 | **CCV2200X** | **CCVH2200X** | **CVS2200XMM** | **CV2200XMM** | **CVH2200XMM** |
| | 2 | 225 | **CCV2225X** | **CCVH2225X** | **CVS2225XMM** | **CV2225XMM** | **CVH2225XMM** |
| **Bolt-On Type** | | | | | | | |
| Bolt-on type circuit breakers used with 37MM and 37SS (three-phase modular metering stacks) ③④ | 3 | 60 | **EHD3060** | **CVS3060X** | **CVS3060X** | **CV3060X** | **CVH3060X** |
| | 3 | 70 | **EHD3070** | **CVS3070X** | **CVS3070X** | **CV3070X** | **CVH3070X** |
| | 3 | 80 | **EHD3080** | **CVS3080X** | **CVS3080X** | **CV3080X** | **CVH3080X** |
| | 3 | 90 | **EHD3090** | **CVS3090X** | **CVS3090X** | **CV3090X** | **CVH3090X** |
| | 3 | 100 | **CC3100X** | **CVS3100X** | **CVS3100X** | **CV3100X** | **CVH3100X** |
| | 3 | 125 | **CC3125X** | **CVS3125X** | **CVS3125X** | **CV3125X** | **CVH3125X** |
| | 3 | 150 | **CC3150X** | **CVS3150X** | **CVS3150X** | **CV3150X** | **CVH3150X** |
| | 3 | 175 | **CC3175X** | **CVS3175X** | **CVS3175X** | **CV3175X** | **CVH3175X** |
| | 3 | 200 | **CC3200X** | **CVS3200X** | **CVS3200X** | **CV3200X** | **CVH3200X** |
| | 3 | 225 | **CC3225X** | **CVS3225X** | **CVS3225X** | **CV3225X** | **CVH3225X** |

***Notes***

① #6–4/0 kcmil wire size range for CVS, CV and CVH tenant main circuit breakers. If #2–300 kcmil is needed, order **2TA225CVK** (two-pole) **3TA225CVK** (three-pole). One kit is needed per breaker.

② "MM" suffix provides mounting hardware needed for 1MP, 1MM and 3MM modular metering stacks only. Mounting hardware is not needed for use in 35MM and 35SS modular metering stacks, but is included as standard with breakers.

③ Retrofit tenant circuit breaker mounting kit (**37MMRCBK**) for installation of Type EHD and CV breakers. Needed only for stacks manufactured prior to February 2013. Order one kit per breaker.

④ Type EHD main tenant circuit breakers are also available from 15 to 50 A.

## Accessories

### 1MP, 1MM and 3MM Modular Metering Stacks

| | Description | Application | Catalog Number |
|---|---|---|---|
| **Fifth Jaw Kit** | Fifth jaw kit | Bolted onto neutral in the 3, 6 or 9 o'clock position. Typically used on network metering systems (three-phase in/single-phase out) or when specified by utility company. | **1MM5JK** |
| | Isolated fifth jaw kit | Connects to the neutral with an insolated wire. | **1MM5JKOP** |
| **Manual Bypass Kit** | Manual bypass kit (ring style socket only) | For use with 125 A sockets only. (Not top socket.) | **1MMBPM125** |
| | | For use with 200 A sockets only. (Not top socket.) | **1MMBPM200** |
| | | This kit only to be used for top position of two- and three-high 125 A 1MM and 3MM stacks and of 2, 5 and six-position 125 A 1MP packs. | **1MMBPM125T** |
| | | This kit only to be used for top position of 200 A two-position 1MP packs. | **1MMBPM200T** |
| **Horn Bypass Kit** | Horn bypass | Used only on ringless cover stacks, kits can be installed on 125 A or 200 A sockets. | **1MMBPH** |
| | | **Note:** For **1MP2122RRL** use: | **WCG8HB** ① |
| | Meter bypass jumper | Installed on 125 A or 200 A sockets. Jumpers are plugged into jaws. Order Lexan® cover plate with bypass jumpers to prevent access to meter socket once energized. (Not UL listed.) | **1MMBPJ** |
| **Lexan Blank Cover** | Lexan blank cover | Circular cover mounted on ring or ringless devices preventing access to meter socket while meter is not in place. Includes four plastic tabs that plug into each jaw. | **1MMPCP** |
| | | Same as **1MMPCP** minus the tabs located in the back to plug into jaws. This device to be used while meter bypass jumpers are in place (**1MMBPJ**). | **1MMACP** |
| | Blank meter socket cover | Used for 125 A stacks. Fits bottom socket only. Kit replaces existing meter cover preventing access to meter socket. Includes hasp for seal. | **1MMBC125B** |
| | | Used on 200 A stacks. Fits bottom socket only. Kit replaces existing meter cover preventing access to meter socket. Includes hasp for seal. | **1MMBC200B** |
| **Wall Mounting Rail** | Wall mounting rail | Rails are 4 feet (1.2m) in length. Bolted on wall for stacks, packs and mains to be hung. | **1MMWB** |
| **Bussed Spacer** | Bussed spacer | Bussed spacer 1200 A 4-inch (101.6 mm). Required when stacks are mounted on right-hand side in EUSERC areas. (copper) | **3MMBSK** ② |
| | Bus duct riser/ meter center connection | Available in 400, 600, 800 A main fusible units only. Contact product line for details. | — |

***Notes***

① WCG8HB only applies to meter packs built prior to 1998. Current meter packs use **1MMBPH**.

② Must be used when mounting MCB main next to an MTB main or another MCB main device.

## Accessories for 1MP, 1MM and 3MM Modular Metering Stacks, continued

**Indoor Corner Elbow**

**Standard Sealing Ring**

| Description | Application | Catalog Number |
|---|---|---|
| Indoor corner elbow (copper) | 12-inch (304.8 mm) indoor corner elbow, 1200 A, three-phase, four-wire for use with 1MM and 3MM only. **Do not use with 35MM, 37MM, 35SS or 37SS stacks.** 12-inch corner elbow not EUSERC approved. | **3MMEB12** |
| Indoor corner elbow (copper) | 16-inch (406.4 mm) indoor corner elbow, 1200 A, three-phase, four-wire for use with 1MM, 3MM, 35MM, 37MM, 35SS and 37SS. | **3MMEB16** |
| Barrier | Barrier for individual sockets | **1MMBK** |
| Meter jumper and cover | Combination meter jumper and cover (200 A maximum). Used to jumper line and load jaws as well as cover meter socket preventing exposure to current carrying parts. | **1MMJCK** |
| Lug block | 125 A two-pole lug block assembly. | **BRSF125** |
| Sealing ring | Stainless steel screw type with brass screw | **1MMSR1** |
| | Standard (included with packs and stacks) ① | **1MMSR2** |
| | Stainless steel screw type with cast zinc screw | **1MMSR4** |
| | Aluminum screw type with locking provisions | **1MMSR5** |
| Top endwall | 125 A, NEMA 1 top end wall with knockouts for 1MM, 3MM meter stacks | **MM12N1WLK** |
| | 200 A, NEMA 1 top end wall for 1MM, 3MM meter stacks | **MM20N1WLK** |

***Note***

① Aluminum Snap Type.

***Renewal Parts***

## 1MP, 1MM and 3MM Replacement Parts

| | Description | Application | Catalog Number |
|---|---|---|---|
| **Ringless Cover** | Ringless cover (can install this to go from ring to ringless) | Installed on 125 A socket for ringless security | **1MMRC125** |
| | | Installed on 200 A socket for ringless security | **1MMRC200** |
| | | For use with top position of 125 A, two- and three-position,1MM and 3MM stacks and two-, five- and six-position 1MP packs | **1MMRC125T** |
| | | Top-position two position IMP | **1MMRC200T** |
| **Ring Cover** | Ring cover | Installed on 125 A socket for ring security | **1MMCP1** |
| | | Installed on 200 A socket for ring security | **1MMCP2** |
| | | Top socket ring cover 125 A | **1MMCP1T** |
| | | Top socket ring cover 200 A | **1MMCP2T** |
| **Tenent Breaker Cover** | Tenant breaker hinged cover | 125 A cover | **1MMBC1** |
| | | 200 A cover | **1MMBC2** |
| **Meter Socket** | Meter socket ① | 125 and 200 A | **1MMMS** |
| | Busbar end cap | Flat—left side | **47-24139A** |
| | | Bump—right side | **47-28172-2A** |
| | Main circuit breaker cover kit (black) | | **49-7060** |

***Notes***

① Meter Packs **1MP2122RRL** and **1MP2122RRLB** use different meter sockets. See Renewal Parts listing RP.32A.01A.T.E for details.

See **RP00501001E** for a complete Renewal Parts listing.

## Accessories for 35MM and 37MM Modular Metering Stacks

| | Description | Application | Catalog Number |
|---|---|---|---|
| | Wall mounting rail | Rails are 4 feet (1.2m) in length. Bolted on wall for stacks, packs and mains to be hung. | **1MMWB** |
| | Indoor corner elbow (copper) | 16-inch (406.4 mm) indoor corner elbow, 1200 A, three-phase, four-wire for use with 1MM, 3MM, 35MM, 37MM, 35SS and 37SS. | **3MMEB16** |
| | Handle insulator | Each meter block includes a lever bypass. This kit includes the sleeve which slides onto the lever handle. | **37MMHC** |
| **Barrel Lock Bracket Kit** | Barrel lock bracket kit | Needed when using barrel lock security. | **37MMBLK** |
| **Totalizing Jumper Kit** | Totalizing jumper kit | Used if one socket is to meter two tenant feeds. When ordering jumper kit, should also order a plastic cover plate (**1MMPCP + IMMJCK**) preventing access to live parts on unused socket. | **37MMTJK** |
| **Type EHD and CV Breaker Retrofit Mounting Kit** | Type EHD and CV breaker retrofit mounting kit | Retrofit mounting hardware for installation of Type EHD and CV breakers in 35MM, 37SS, 37MM and 37SS meter stacks manufactured prior to February 2013. Order one kit per breaker. | **37MMRCBK** |
| **Type CV Breaker Mounting Kit** | Type CV breaker mounting kit | Replacement Type CV breaker mounting hardware kit. Used in 200 A 1MP/1MM/3MM modular metering stacks at 42, 65 and 100 kAIC. | **1MMCBK** |
| **Blank Cover Kit** | Blank cover kit | Kit replaces meter cover preventing access to socket. | **37MMCK** ① |
| | | | **37MMCKA** ② |
| | Barrier | Barrier for individual sockets | **37MMBK** |
| **Three-Phase to Single-Phase Conversion Kit** | Three-Phase to single-phase conversion kit | This kit will convert one three-phase meter socket (37MM devices) to a single-phase socket. Only needed if phasing A-C or C-B. If single-phase socket is to be phased A-B, kit is not required for field conversion. (Must use three-phase breaker.) | **37MM1CK** |
| | Bus duct riser/meter center connection | Available in 400, 600, 800 A Main fusible units and 400, 600, 800, 1000, 1200 main circuit breaker. Contact product line for details. | — |
| | Anti-inversion clip | This clip should be inserted into upper right hand jaw of a 320 A meter socket. The purpose is prevent a 200 A meter from being inserted into a 320 A meter socket. | **37MMINVCLIP** |

***Notes***

① For all units made 10/2002 and earlier.

② For all units made after 11/2002.

***Renewal Parts***

## 35MM and 37MM Modular Metering Stacks

| | Description | Application | Catalog Number |
|---|---|---|---|
| **35MM Replacement Meter Socket** | 35MM replacement meter socket | To replace meter socket with lever bypass and jaw release. | **MSLMSA1** |
| | 37MM replacement meter socket | To replace meter socket with lever bypass and jaw release. | **MSLMSA2** |
| **37SS Replacement Meter Socket** | 35SS replacement meter socket | To replace meter socket with test bypass disconnect feature | **MSTMSA1** |
| | 37SS replacement meter socket | To replace meter socket with test bypass disconnect feature | **MSTMSA2** |
| | Safety socket meter cover assembly | To replace ring type cover over the meter prior to 7/1/02. | **MSTMCVR1** |
| | Safety socket meter cover assembly | To replace ring type cover over the meter after 7/1/02 | **MSTMCVR1E** |
| **Meter Cover Assembly** 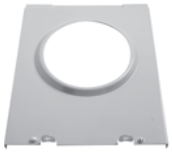 | 35MM and 37MM meter cover assembly | Prior to 12/1/02 | **37MMSK** |
| | | After 12/1/02 | **37MMSK1** |
| | Meter cover assembly with NJ latch | To replace ringless cover over the meter. Includes New Jersey latch requirement. | **37MMSKNJ** |
| | Tenant breaker hinged cover | To replace cover over tenant breakers. | **1MMBC2** |
| | Busbar end cap | Flat—left side | **47-24139A** |
| | | Bump—right side | **47-28172-2A** |
| | Main circuit breaker cover/CIT (black) | | **49-7060** |

***Note***

See **RP.32A.01.T.E** for a complete Renewal Parts listing.

## Technical Data and Specifications

### *Phase Balancing*

All 3MM meter modules come factory connected to phase A and B, per Figure A. When connected to a 208Y/120 Vac three-phase, four-wire system, field phase balancing of two out of every three stacks is required. One of every three stacks should be phased AC, per Figure B, and one of every three stacks should be phased CB, per Figure C.

**Examples:**

**Nine Total Positions**—use (three) three-position stacks and phase one per Figure B (A-C phasing) and one per Figure C (C-B phasing).

**16 Total Positions**—use (two) five-position and (two) three-position stacks. Phase balance (one) five-position per Figure B (A-C phasing) and (one) five-position per Figure C (C-B phasing).

**19 Total Positions**—where four-position maximum height is allowed by utility. Use (one) four-position and (five) three-position stacks. Phase balance (two) three-position stacks per Figure B (A-C phasing) and (two) three-position stacks per Figure C (C-B phasing).

### "Z" Shaped and "Barrel" Shaped Phase Connector

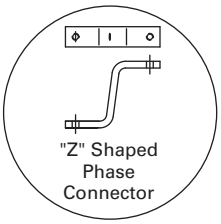


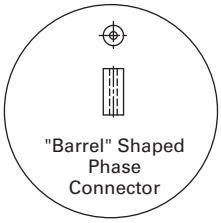


### Phase Balancing

| | 125 A STACKS | 200 A STACKS |
|---|---|---|
| FIGURE A | 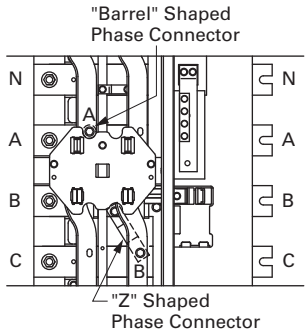  **FACTORY 125 A A-B PHASING** | 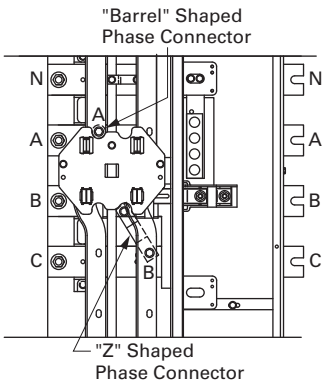  **FACTORY 200 A A-B PHASING** |
| FIGURE B | 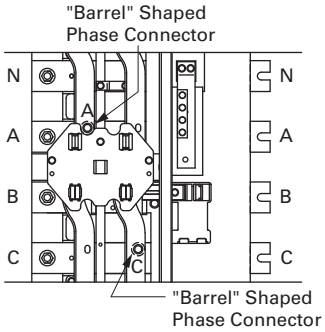  **FIELD 125 A A-C PHASING**<br>Remove "Z" Phase Jumper from "B" Phase Horizontal Bus<br>Replace with "Barrel" Phase Jumper from kit 99-4184<br>Supplied with Meter Stack and attach to "C" Phase Bus as shown.<br>Torque to 60 lb-in (6.78 N-M)<br>Retain "Z" Phase Jumper for future use. | 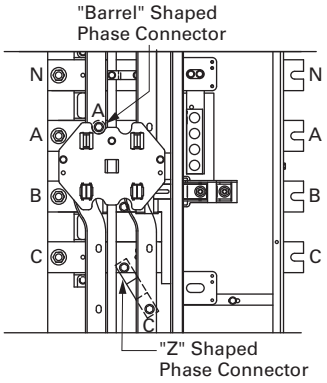  **FACTORY 200 A A-C PHASING**<br>Remove "Z" Phase Jumper from "B" Phase Horizontal Bus<br>Reattached at "C" Phase Horizontal Bus as Shown.<br>Torque to 60 lb-in (6.78 N-M) |
| FIGURE C | 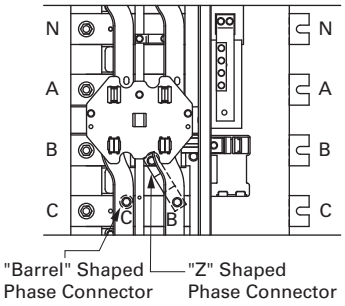  **FIELD 125 A C-B PHASING**<br>Remove "Barrel" Phase Jumper from "A" Phase Horizontal Bus<br>Reattached at "C" Phase Horizontal Bus as shown.<br>Torque to 60 lb-in (6.78 N-M) | 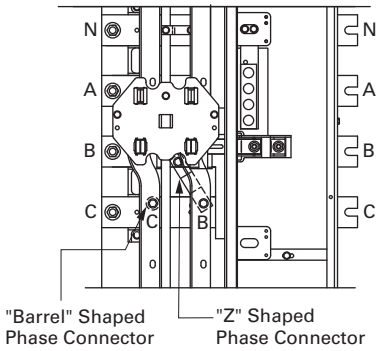  **FACTORY 200 A C-B PHASING**<br>Remove "Barrel" Phase Jumper from "A" Phase Horizontal Bus<br>Reattached at "C" Phase Horizontal Bus as shown.<br>Torque to 60 lb-in (6.78 N-M) |

***Series Combination Short-Circuit Ratings***

When main tenant breakers are installed in Eaton's modular metering stack per the table on **Page V1-T4-145**, the branch breakers installed in downstream panel rated 10 kAIC or greater are protected to the listed series AIC rating. Refer to the downstream panel marking for the proper series combination short-circuit ratings.

Replacement or additional breakers shall be of the same manufacture and type, and shall have an interrupting rating equal to or greater than the interrupting rating of any main tenant breaker installed.

## Series Combination Short-Circuit Ratings

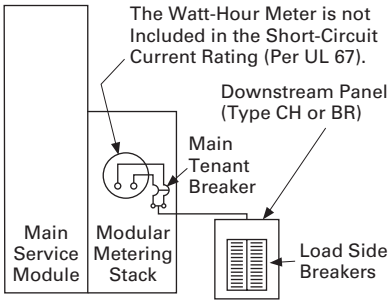

## Series Combination Short-Circuit Ratings—240 Vac

| Main Module Overcurrent Device Breaker Type or Class Fuse | System AIC Rating 120/240 Vac Maximum | Meter Module Tenant Feeder Breaker Type 1MM, 3MM, 35MM, 37MM, 35SS, 37SS or Loadcenter Main Breaker | Tenant Feeder Breaker Short-Circuit Rating | Loadcenter Branch Breaker (Single-, Two- or Three-Pole) |
|---|---|---|---|---|
| None | 10,000 | None | — | BD, BR, BRD, BQ, BQC, GFCB, CH, CHT, BRCAF, CHFCAF, CHF, CH-GFCI |
| Without main disconnect. Cable tap box Type 1MTB_, 3MTB_ | 10,000 | BR_, CC_, BW_, CCV_ | 10,000 | |
| | 22,000 | BRH_ | 22,000 | |
| | 25,000 | CSR_, CHH_H2, CCVH_ | 25,000 | |
| | 42,000 | BRHH_, CHH_H4, CVS_ | 42,000 | |
| | 65,000 | BRX_, CV_, KD_, HKD_ | 65,000 | |
| | 100,000 | CHH_, CVH_, KDC_ | 100,000 | |
| Main switch module Type 1MFS_, 3MFS_ with Class T fuse, 400 A maximum | 42,000 | BRH_ | 22,000 | CH, CHT, CH3, CH-GFCI |
| Main switch module Type 1MFS_, 3MFS_ with Class T fuse, 600 A maximum | 100,000 | BRH_ | 22,000 | BD, BR, BRD, BQ, BQC, GFCB |
| Main switch module Type 1MFS_, 3MFS_ with Class T fuse, 1200 A maximum | 10,000 | BR_, CC_, BW_, CCV_ | 10,000 | BD, BR, BRD, BQ, BQC, GFCB, CH, CHT, BRCAF, CHFCAF, CHF, CH-GFCI |
| | 22,000 | BRH_ | 22,000 | |
| | 25,000 | CSR_, CHH_H2, CCVH_ | 25,000 | |
| | 42,000 | BRHH_, CHH_H4, CVS_ | 42,000 | |
| | 65,000 | BRX_, CV_, KD_, HKD_ | 65,000 | |
| | 100,000 | CHH_, CVH_, KDC_ | 100,000 | |
| Main switch module Type 1MFS_, 3MFS_ with Class T fuse, 1200 A maximum | 100,000 | BRHH_ | 42,000 | BD, BR, BRD, BQ, BQC, GFCB, CH, CHT, BRCAF, CHFCAF, CHF, CH-GFCI |
| Main switch module Type 1BPS_, 3BPS_ with Class L fuse, 1200–2000 A | 10,000 | BR_, CC_, BW_, CCV_ | 10,000 | BD, BR, BRD, BQ, BQC, GFCB, CH, CHT, BRCAF, CHFCAF, CHF, CH-GFCI |
| | 22,000 | BRH_ | 22,000 | |
| | 25,000 | CSR_, CHH_H2, CCVH_ | 25,000 | |
| | 42,000 | BRHH_, CHH_H4, CVS_ | 42,000 | |
| | 65,000 | BRX_, CV_, KD_, HKD_ | 65,000 | |
| | 100,000 | CHH, CVH_, KDC_ | 100,000 | |
| Main breaker module Type 1MCB_, 3MCB_ with KD, HKD (400 A maximum) LD, HLD (600 A maximum) MDL, HMDL (800 A maximum) ND, NGS, HND, NGH (1200 A maximum) RD, RGH (2000 A maximum) | 10,000 | BR_, CC_, BW_, CCV_ | 10,000 | BD, BR, BRD, BQ, BQC, GFCB, CH, CHT, BRCAF, CHFCAF, CHF, CH-GFCI |
| | 22,000 | BRH_ | 22,000 | |
| | 25,000 | CSR_, CHH_H2, CCVH_ | 25,000 | |
| | 42,000 | BRHH_, CHH_H4, CVS_ | 42,000 | |
| | 65,000 | BRX_, CV_, KD_, HKD_ | 65,000 | |
| | 100,000 ① | CHH_, CVH_, KDC_ | 100,000 | |

***Note***

① 100,000 A rating with 100,000 A rated main.

### *1MP 125 A Meter Module*

This All-in-One Meter Module is UL listed for the short-circuit rating at 240 Vac maximum in rms symmetrical amperes per table below.

### 1MP 125 A Meter Module

| Tenant Breaker Catalog Number Two-Pole | Maximum Ampere Rating | UL Listed Series Short-Circuit Rating |
|---|---|---|
| BRX_____ | 125 | 65 kAIC |
| BRHH_____ | 125 | 42 kAIC |
| BRH_____ | 125 | 22 kAIC |
| BR_____ | 125 | 10 kAIC |

When Type BRX, BRHH or BRH tenant breakers are installed in this meter module, then Eaton's breakers rated 10 kAIC or greater installed on the load side of this meter module may be protected for short circuits up to 22 kAIC with Type BRH breakers, 42 kAIC with Type BRHH or 65 kAIC with Type BRX breakers.

See load side breaker panel marking for proper short-circuit current rating.

### 1MP 125 A Meter Module

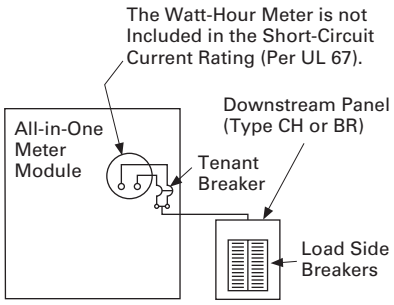


**Note:** The ratings for both 125 and 200 A tenant positions apply to both Type BR and CH loadcenters and 10 kAIC branch breakers.

### *1MP 200 A Meter Module*

This All-in-One Meter Module is UL listed for the short-circuit rating at 240 Vac maximum in rms symmetrical amperes per table below.

### 1MP 200 A Meter Module

| Tenant Breaker Catalog Number Two- or Three-Pole | Maximum Ampere Rating | UL Listed Series Short-Circuit Rating |
|---|---|---|
| CVH_XMM | 200 | 100 kAIC |
| CV_XMM | 200 | 65 kAIC |
| CVS_XMM | 200 | 42 kAIC |
| CCVH_XMM | 200 | 25 kAIC |
| CCV_X | 200 | 10 kAIC |

When Type CV tenant breakers are installed in this meter module, then breakers rated 10 kAIC or greater installed on the load side of this meter module may be protected for short circuits up to 100 kAIC.

See load side breaker panel marking for proper short-circuit current rating.

### 1MP 200 A Meter Module

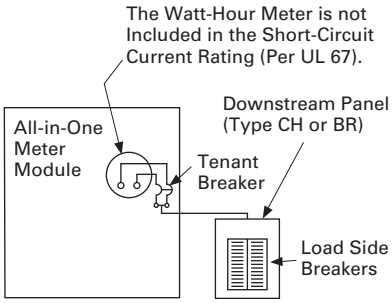

### *General*

When tenant breakers are installed in Eaton's metering modules per the short-circuit current ratings below, the branch breakers installed in downstream panel rated 10 kAIC or greater are protected to the listed series AIC rating. Refer to the downstream panel marking for the proper series combination short-circuit ratings. These ratings apply to both loadcenter Types BR and CH.

The short-circuit rating is limited to the lowest interrupting rating of any tenant breaker installed or to the lowest marked interrupting rating of the main switch, main breaker or main lug modules.

Replacement or additional breakers shall be of the same type and manufacturer, and shall have an interrupting rating equal to or greater than the interrupting rating of any tenant breaker presently installed in the meter module.

### *1MM, 3MM 125 A Meter Module*

When used with main switch, main breaker or main lug modules, this meter module is UL listed for the short-circuit rating at 240 Vac maximum in rms symmetrical amperes per table below.

### 1MM, 3MM 125 A Meter Module

| Tenant Breaker Catalog Number Two-Pole | Amperes Maximum | UL Listed Series Short-Circuit Rating |
|---|---|---|
| BRX_____ | 125 | 65 kAIC |
| BRHH_____ | 125 | 42 kAIC |
| BRH_____ | 125 | 22 kAIC |
| BR_____ | 125 | 10 kAIC |

When Type BRX, BRHH or BRH tenant breakers are installed in this meter module, then breakers rated 10 kAIC or greater installed on the load side of this meter module may be protected for short circuits up to 22 kAIC with Type BRH breakers, 42 kAIC with Type BRHH or 65 kAIC with Type BRX breakers.

See load side breaker panel marking for proper short-circuit current rating.

### 1MM, 3MM 125 A Meter Module

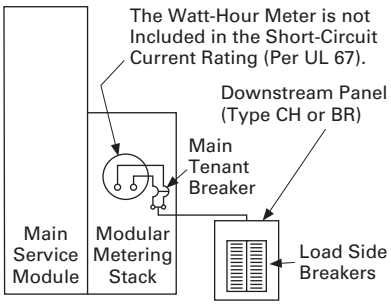


### *1MM, 3MM, 200 A Meter Modules; 35MM, 37MM, 35SS and 37SS 225 A Meter Modules*

When used with main switch, main breaker or main lug modules, these meter modules are UL listed for the short-circuit rating at 240 Vac maximum in rms symmetrical amperes per table below.

### 1MM, 3MM, 200 A Meter Modules; 35MM, 37MM, 35SS and 37SS 225 A Meter Modules

| Tenant Breaker Catalog Number Two- or Three-Pole | Amperes Maximum 1MM 3MM 200 A | Amperes Maximum 35MM, 37MM, 35SS, 37SS 225 A | UL Listed Series Short-Circuit Rating |
|---|---|---|---|
| CVH_XMM | 200 | 225 | 100 kAIC |
| CV_XMM | 200 | 225 | 65 kAIC |
| CVS_XMM | 200 | 225 | 42 kAIC |
| CCVH_X | 200 | 225 | 25 kAIC |
| CCV_X | 200 | 225 | 10 kAIC |
| CC_X | 200 | 225 | 10 kAIC |

When Type CV tenant breakers are installed in these meter modules, then Eaton's breakers rated 10 kAIC or greater installed on the load side of these meter modules may be protected for short circuits up to 100 kAIC.

See load side breaker panel marking for proper short-circuit current rating.

### 1MM, 3MM, 200 A Meter Modules; 35MM, 37MM, 35SS and 37SS 225 A Meter Modules

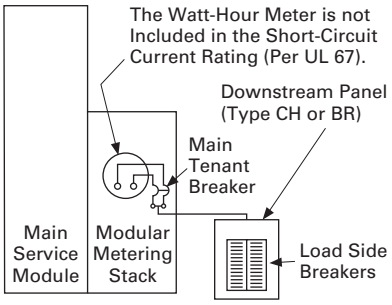

***Ratings***

A. The assembly shall be rated to withstand mechanical forces exerted during short-circuit conditions when connected directly to a power source having available fault current [22,000] [42,000] [65,000] [100,000] amperes symmetrical at rated voltage.

***Construction***

A. The entire assembly shall be front accessible and shall include [main lugs] [a main disconnect device].

B. Tenant disconnects shall be wired for cold sequence and shall be molded case circuit breakers.

C. The meter sockets shall be (ring-) (ringless-) type rated (125 A) (200 A) (as shown on the plans) and a bypass (shall be) (shall not be) required. If required, the bypass shall be a (slider-) (horn-) (lever-) (disconnect block-) type. The meter sockets and associated branch protective device positions shall be completely prewired and shipped ready for installation of the meters and tenant main breakers. Meter sockets shall include covers with sealing positions.

***Bus***

A. All busbars shall be [tin-plated aluminum or copper]. Main horizontal busbars shall be mounted with all three phases arranged in the same vertical plane. Bus sizing shall be based on UL standard temperature rise criteria for multiple metering equipment.

B. Provide a full capacity neutral bus where a neutral bus is indicated on the drawings.

C. All hardware used for busbar connections shall be high-tensile strength, zinc-plated. Provide Belleville-type spring washers for all bus joints.

***Wiring/Terminations***

A. [Mechanical-type terminals] [Crimp-type termination provisions] shall be provided for all line terminations suitable for copper or aluminum cable and rated at 75 °C.

B. Lugs shall be provided in the incoming line section for connection of the main grounding conductor.

***Main Circuit Protective Devices***

A. Main protective devices shall be [molded case circuit breakers] [bolted pressure switches] [quick-make/quick-break fusible switches].

***Molded Case Circuit Breakers***

A. [Main] [Feeder] [All] protective devices shall be molded case circuit breakers with inverse time and instantaneous tripping characteristics.

B. Circuit breakers shall be operated by a toggle-type handle and shall have a quick-make/quick-break over-center switching mechanism that is mechanically trip-free. Automatic tripping of the breaker shall be clearly indicated by the handle position. Contacts shall be nonwelding silver alloy and arc extension shall be accomplished by means of DE-ION® arc chutes.

C. Circuit breakers shall have a minimum symmetrical interrupting capacity as indicated on the drawings.

D. Circuit breakers [250-] [400-] [600-] [1200-] ampere frame and below shall be manufactured by Eaton with thermal-magnetic or electronic trip units having inverse time-current characteristics.

E. Circuit breakers shall be UL listed for series application.

***Bolted Pressure Switches***

A. Main protective devices shall be bolted pressure contact type and shall be UL listed.

B. Fusible switches shall be furnished with Class L fuse clips. Switch contact interrupting capacity shall be 12 times the continuous rating of the switch.

C. Fuse access door s hall be mechanically interlocked with the operating handle and shall have provisions for padlocking the switch in the OPEN position.

D. The switch shall use a stored energy deadfront operating mechanism compressed and released by the operating handle, to provide quick positive switching action, independent of the operating handle.

E. Switches shall be manually operated.

***Quick-Make/Quick-Break Fusible Switches***

A. Fusible switches 30 A through 1200 A frames shall be furnished with 300 V Class T-type fuse clips unless otherwise scheduled.

B. Switches shall incorporate safety cover interlocks to prevent opening the cover with the switch in the ON position.

C. Provide defeater for authorized personnel.

D. Handles shall have provisions for padlocking and shall clearly indicate the ON or OFF position.

E. Front cover doors shall be padlockable in the CLOSED position.

F. Main protective devices shall be quick-make/quick-break fusible switches as manufactured by Eaton.

***Tenant Utility Metering***

A. For EUSERC serviced areas, meter centers shall incorporate metering sections with tenant feeder circuits using ring-type meter sockets rated [125] [200] amperes to meet local utility and/or customer requirements.

B. The self-contained meter sockets shall include a test bypass/disconnect block per EUSERC requirements,

– OR–

A. For non-EUSERC serviced areas, meter centers shall incorporate metering sections with tenant feeder circuits using [ring-] [ringless-] type meter sockets rated [125] [200] [320] amperes to meet local utility or customer requirements. Provide meter sockets with individual covers having sealing provisions.

B. Meter sockets shall have manual bypass and optional internal barriers.

***Enclosures***

A. NEMA 1 Enclosure

– OR–

A. Outdoor NEMA 3R Surface-Mounted Enclosure

***Finish***

A. Boxes and trims shall be bonderized and finished with ANSI 61 light gray enamel.

## Dimensions

Approximate Dimensions in Inches (mm)

### General Layout

Minimum and maximum height of single-phase and three-phase meter sockets above typical ground level.

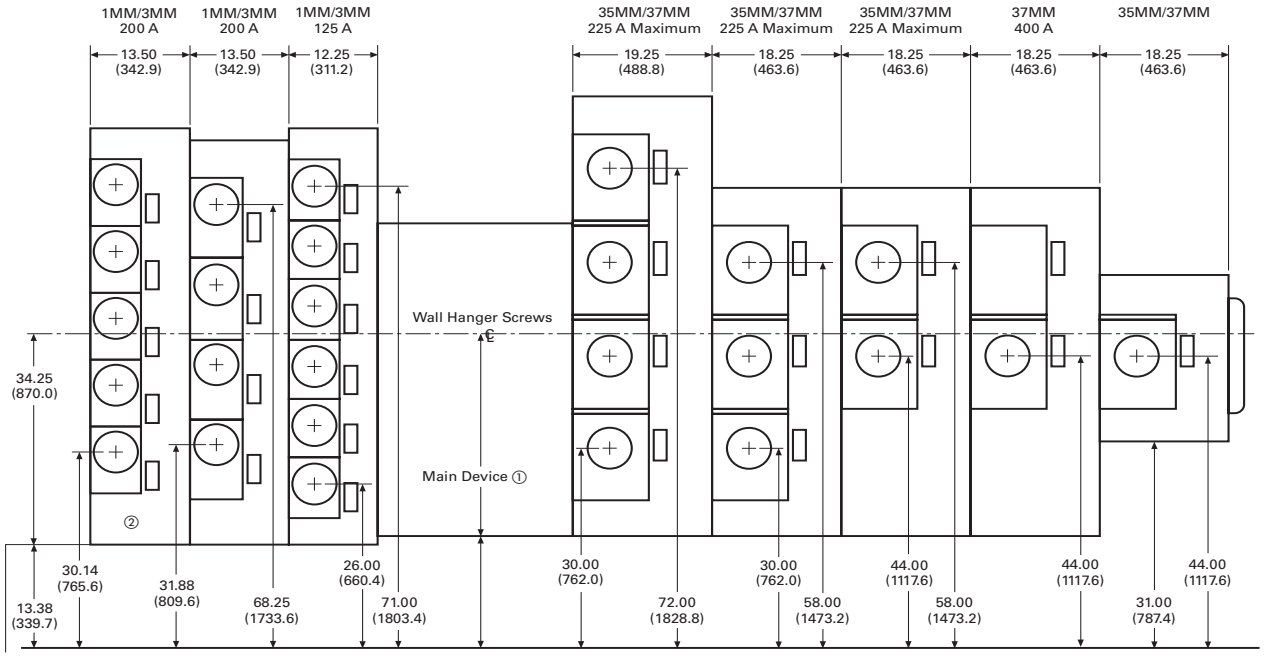


### *Mounting Features*

***Mounting Features***

A standard mounting rail and factory-installed swing away feet, speed up and simplify installation.

***Notes***

① Not a constant value. Dimension changes depending on main device chosen. See **Page V1-T4-110** for specific dimensions.

② Residential device.

Power Pedestals

Construction Site and RV Parks

Marina Power and Lighting

Mobile Home Panels


## 5.1 Introduction

Product Description . . . . . V1-T5-2
Application Description . . . . . V1-T5-2
Optional Features . . . . . V1-T5-2

## 5.2 Temporary Power/RV Park

Product Overview . . . . . V1-T5-3
Product Description . . . . . V1-T5-3
Application Description . . . . . V1-T5-4
Features and Benefits . . . . . V1-T5-4
Standards and Certifications . . . . . V1-T5-5
Catalog Number Selection . . . . . V1-T5-6
Product Selection . . . . . V1-T5-7
Accessories . . . . . V1-T5-7
Renewal Parts . . . . . V1-T5-8
Surface Units . . . . . V1-T5-10
Product Overview . . . . . V1-T5-10
Product Selection . . . . . V1-T5-10
Dimensions . . . . . V1-T5-13
Pedestal Units . . . . . V1-T5-16
Product Overview . . . . . V1-T5-16
Product Selection . . . . . V1-T5-16
Dimensions . . . . . V1-T5-18

## 5.3 Mobile Home Panels

Product Overview . . . . . V1-T5-21
Features . . . . . V1-T5-21
Catalog Number Selection . . . . . V1-T5-22
Product Selection . . . . . V1-T5-22
Accessories . . . . . V1-T5-23
Dimensions . . . . . V1-T5-24

## 5.4 RV Park Hook-Ups

Power Pedestals . . . . . V1-T5-28
Powerhouse Power Pedestal . . . . . V1-T5-30
Powerhouse—Stainless Steel (SS) Power Pedestal . . . . . V1-T5-33
Newport Camp Mate Power Pedestal . . . . . V1-T5-36
Park Light Power Pedestal . . . . . V1-T5-39
Firehouse . . . . . V1-T5-42
Digital Electronic Kilowatthour Meters . . . . . V1-T5-44
Distribution Equipment—Ground Fault Monitor . . . . . V1-T5-45
Distribution Equipment—Substations . . . . . V1-T5-46
Distribution Equipment—Panels . . . . . V1-T5-49
Distribution Equipment—Transformers . . . . . V1-T5-50

## 5.5 Marina Power and Lighting Equipment

Power Pedestals . . . . . V1-T5-51
Lighthouse . . . . . V1-T5-54
Lighthouse–SS . . . . . V1-T5-58
Admiral–SS . . . . . V1-T5-62
Newport Harbor Mate . . . . . V1-T5-65
Hatteras Light . . . . . V1-T5-69
Firehouse . . . . . V1-T5-73
Smart Start . . . . . V1-T5-79
Mariner . . . . . V1-T5-80
Digital Electronic Kilowatthour Meters . . . . . V1-T5-81
Distribution Equipment—Ground Fault Monitor . . . . . V1-T5-82
Distribution Equipment—Mega Yacht Powerpoint . . . . . V1-T5-83
Distribution Equipment—Substations . . . . . V1-T5-86
Distribution Equipment—Panels . . . . . V1-T5-89
Distribution Equipment—Transformers . . . . . V1-T5-90


**Don't Give Up!**

If you don't find the product you want in this catalog, try the Flex Center at **1-800-330-6479**.

Power Pedestals

## Contents

***Description***

Introduction



## Product Description

A power pedestal is a device designed for outdoor service to meet temporary power requirements at construction sites, marinas, recreational vehicle (RV parks, marinas and mobile home parks). Power pedestals provide a safe and reliable means for users to access electricity at such locations.

## Application Description

### Construction Site and RV Parks

Power outlet panels on construction sites and in RV parks provide a safe and reliable means for users to access electricity. A wide range of products are available with multiple features and enclosure material options.

***Construction Site and RV Parks***

### Mobile Home Panels

Eaton's versatile mobile home panels have a user-friendly design that allows for a faster, cleaner installation. Mobile home panels are designed for service entrance distribution, and include a meter and distribution section with breaker and receptacle configuration options.

***Mobile Home Panels***

### Marina Power and Lighting

Park lighting and marina pedestals offer robust enclosure options with premium features to enhance user convenience at marinas and campgrounds.

***Marina Power and Lighting***

## Optional Features

- Product can ship from the factory completely assembled and prewired
- External light
- TV and telephone jacks
- Ground fault monitors
- Digital electronic kilowatthour meters
- Water faucet
- Available GFI (ground fault interrupter) protection
- Weatherproof engineered resin enclosure (will never rust or deteriorate)
- Stainless steel to meet and exceed all applicable codes, and withstand harsh inland and coastal environments

Power Outlet Panels

## Contents


| *Description* | *Page* |
|---|---|
| Product Overview | V1-T5-3 |
| Application Description | V1-T5-4 |
| Features and Benefits | V1-T5-4 |
| Standards and Certifications | V1-T5-5 |
| Catalog Number Selection | V1-T5-6 |
| Product Selection | V1-T5-7 |
| Accessories | V1-T5-7 |
| Renewal Parts | V1-T5-8 |
| Surface Units | V1-T5-10 |
| Pedestal Units | V1-T5-16 |




## Product Overview

A power outlet panel (or POP) is a device designed for outdoor service to meet temporary power requirements at construction sites and RV parks. POPs provide a safe and reliable means for users to access electricity at such locations.

### Product Description

Power outlet panels shall be designed for outdoor service to meet temporary power outlet requirements at construction sites and provide high quality, economical power to individual sites at RV parks. POPs shall be provided with means to bond the neutral for temporary service entrance applications. RV panels shall have a factory-installed insulated neutral bar.

#### *Receptacles and Circuit Protection*

Circuit protection shall be Eaton's UL listed full-size Type BR or half-size Type BD circuit breakers. The receptacles shall be NEMA commercial/industrial grade devices. Ground fault protection (GFCB) shall be provided at the 20 A duplex NEMA 5-20R receptacle or 20 A single-pole circuit breaker when required. Ground fault protection shall be provided at the circuit breaker for receptacles above 20 A when required.

#### *Construction*

The power outlet panel pedestal shall be of deadfront design and constructed of heavy gauge, 100 percent galvanized steel. Baked-on polyester powder coating shall be used for excellent mechanical strength, plus resistance to chalking caused by the sun's ultraviolet rays. The power outlet panel surface and pedestal units shall have NEMA Type 3R rainproof enclosures.

#### *Ease of Installation*

Panels shall ship from the factory completely assembled, prewired with 100 percent copper wire, and tested in accordance with UL Standard 231. The door shall swing up and open for user convenience and ease of access to breakers and receptacles. When required, a means for securing the door in the open position shall be provided. Panels shall be bottom fed through knockouts in endwall or top fed using a bolt-on raintight hub. Knockouts shall range from 1/2-inch (12.7 mm) to 1-1/2 inches (38.1 mm). Grounding provisions (#4–14 Cu/Al) shall be provided on all panels.

## Application Description

POPs are also sometimes called temporary power panels, temporary site service equipment or RV panels.

### *Construction Site Application*

When POPs are used at a construction site, they are installed on a temporary basis until permanent electrical power is available at the building. The most common reason for needing a POP at a construction site is to provide a power source for the contractor's tools.

*Construction Site Application*

### *RV Park Applications*

When POPs are used at an RV park, they are installed for more permanent use and serve the purpose of providing power to the recreational vehicles. Many RV parks now supply customers with amenities such as lighted POPs with TV and telephone jacks.

*RV Park Application*

### *Service Applications*

Suitable for use as temporary Service Entrance Equipment, temporary power service equipment and recreational vehicle site supply.

## Features and Benefits

- Designed for outdoor service to meet power outlet requirements
- Receptacles conform to NEMA and/or ANSI configurations as specified by the National Electrical Code® (NEC)
- Includes a factory-installed insulated neutral bar with provisions for bonding when used for temporary service entrance applications
- 125 A rated meter socket
- Temporary power and RV park POPs are CSA listed. Compact POP and single receptacle devices are not CSA listed

### *Designed for Easy Installation and Protection*

- Panels come from the factory completely assembled, prewired with 100 percent copper wire and tested...ready for easy installation
- Door swings up and open for user convenience and ease of access to breakers and receptacles
- Panels can be bottom fed through knockouts in the endwall or top fed using a bolt-on raintight hub
- Two-piece deadfront cover allows field wiring without interfering with factory wiring
- Lower deadfront cover permits easy field wiring to circuit protective devices
- Available GFI (ground fault interrupter) single- and two-pole protection through 50 A

***Two Styles to Meet Your Power Outlet Needs***

- **Surface mount:** User mounts unit to a post
- **Pedestal mount:** User mounts with an underground pedestal extension or pad-mounting bracket. (Underground pedestal extension and pad-mounting bracket are sold separately. See accessories **Page V1-T5-7** for part numbers and options)

***Compact Design Available in Certain Configurations for Added Convenience***

## Standards and Certifications

- UL Standard 231
- UL File Number E163588

Receptacles conform to NEMA and/or ANSI configurations as specified by the NEC.

***Standard Compliance***

All power outlet panels for temporary construction site power and RV (recreational vehicle) application shall be UL listed for the U.S. per UL Standard 231, File E163588. Receptacles shall conform to NEMA and/or ANSI configurations as specified by the National Electrical Code (NEC).

Listed

## Surface Units

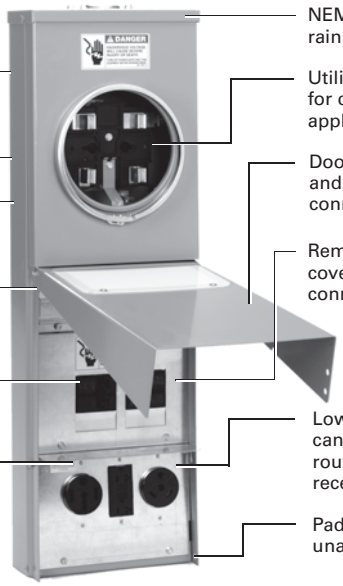

- 100 percent galvanized steel with baked-on polyester powder coating
- Three-point mounting
- One-piece case back for metered and unmetered panels
- Lighted option for site location and nighttime panel operations
- GFI circuit breakers available through 50 A
- Unique steel barrier prevents unauthorized operation of breakers when door is closed and padlocked
- NEMA 3R construction for rainproof installation
- Utility grade metering available for construction site or RV park applications
- Door swings up when opening and allows cords to remain connected when closed.
- Removable upper deadfront cover for easy incoming wire connections to breaker terminals
- Lower deadfront cover can be removed for easy routing of incoming wires or receptacle changeouts
- Padlock provisions to prevent unauthorized entry

- **Metered units available with meter on top or on bottom**
- **Units are factory wired and assembled**

## Pedestal Units

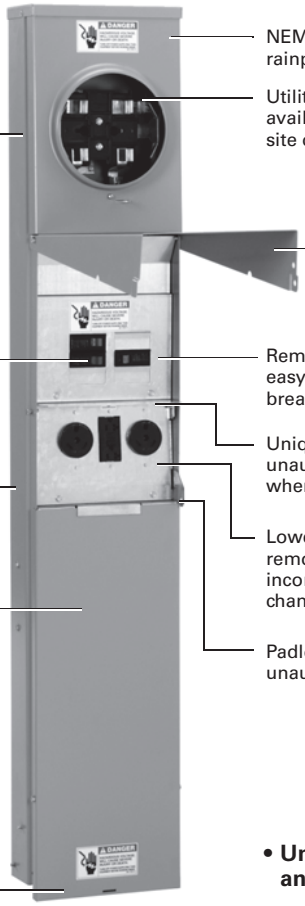

- 100 percent galvanized steel with baked-on polyester powder coating
- GFI circuit breakers (single- and two-pole) available through 50 A
- One-piece case back for metered and unmetered panels
- Loop-feed lug assembly with 350 kcmil lugs included as standard
- Pedestal extension available for underground services
- Pad-mounted bracket option also available
- NEMA 3R construction for rainproof installation
- Utility grade metering available for construction site or RV park applications
- Door swings up when opening and allows cords to remain connected when closed
- Removable upper deadfront cover for easy incoming wire connections to breaker terminals
- Unique steel barrier prevents unauthorized operation of breakers when door is closed and padlocked
- Lower deadfront cover can be removed for easy routing of incoming wires or receptacle changeouts
- Padlock provisions to prevent unauthorized entry

- **Units are factory wired and assembled**

## Catalog Number Selection

**C H M 1 N 7 N 4 N P X L T Z U**

**Eaton's Cutler-Hammer® Series**

**Metering Type**
- **U** = Unmetered
- **M** = Metered-ring
- **R** = Metered-ringless

**Receptacle Type Left Position** ①

| | |
|---|---|
| **1** = NEMA 14-50R | **A** = NEMA L14-50R |
| **2** = NEMA 5-20R2 ② | **B** = NEMA L6-50R |
| **3** = NEMA 14-30R | **C** = NEMA L5-50R |
| **4** = NEMA TT-30R | **D** = NEMA L14-30R |
| **5** = NEMA 6-20R2 | **E** = NEMA L6-30R |
| **6** = NEMA 5-20R2 | **F** = NEMA L5-30R |
| **7** = NEMA 5-20R2GFI | **H** = NEMA L6-20R |
| **8** = NEMA 5-20R2GFI ② | **J** = NEMA L5-20R |
| **9** = NEMA 5-20R2GFI ③ | **Blank** = No receptacle |
| **K** = NEMA 6-20R2 ② | |

**Receptacle Type Center Position** ①
- See "**Receptacle Type Left Position**" for code selection

**Receptacle Type Right Position** ①
- See "**Receptacle Type Left Position**" for code selection

**Circuit Breaker Type Position 2**
- **N** = Non-ground fault
- **G** = Ground fault

**Circuit Breaker Type Position 3**
- **N** = Non-ground fault
- **G** = Ground fault

**Circuit Breaker Type Position 1**
- **N** = Non-ground fault
- **G** = Ground fault

**Mounting**
- **S** = Surface
- **P** = Pedestal
- **B** = Back-to-back pedestal

**Interior**
- **X** = Six circuit
- **Blank** = Standard Four circuit

**Lighting**
- **L** = Lighted

**Pedestal Extension**
- **TZ**= Factory installed pedestal extension with lay-in ground lug

**Meter Location (for Metered Devices Only)**
- **U** = Bottom location
- **Blank** = Top location

***Notes***

① For receptacle configurations, see **table below**.

② Weather-resistant.

③ Weather-resistant/tamper resistant.

### Receptacle Configuration

| | | | | | | | | |
|---|---|---|---|---|---|---|---|---|
| **1** | | 50 A, 125/250 V, three-pole, four-wire, **NEMA 14-50R**<br>Two-pole, 50 A breaker | **4** | | 30 A, 125 V, two-pole, three-wire, **NEMA TT-30R**<br>Single-pole, 30 A breaker | **7** | | 20 A, 125 V, two-pole, three-wire, **NEMA 5-20R2GFI**<br>Single-pole, 20 A breaker |
| **2** | | 20 A, 125 V, two-pole, three-wire, weather-resistant (WR), **NEMA 5-20R2**<br>Single-pole, 20 A breaker | **5** | | 20 A, 250 V, two-pole, three-wire, **NEMA 6-20R2**<br>Two-pole, 20 A breaker | **8** | | 20 A, 125 V, two-pole, three-wire, weather-resistant (WR), **NEMA 5-20R2GFI** |
| **3** | | 30 A, 125/250 V, three-pole, four-wire, **NEMA 14-30R**<br>Two-pole, 30 A breaker | **6** | | 20 A, 125 V, two-pole, three-wire, **NEMA 5-20R2**<br>Single-pole, 20 A breaker | **9** | | 20 A, 125 V, two-pole, three-wire, weather-resistant/ tamper-resistant (WR TR), **NEMA 5-20R2GFI** |
| | | | | | | **K** | | 20 A, 250 V, two-pole, three-wire, weather-resistant (WR), **NEMA 6-20R2**<br>Two-pole, 20 A breaker |

### Twist-Lock and Custom Receptacle/Breaker Combinations

| | | | | | | | | |
|---|---|---|---|---|---|---|---|---|
| **A** | | 50 A, 125/250 V, three-pole, three-wire, **NEMA L14-50R**<br>Two-pole, 50 A breaker | **D** | | 30 A, 125/250 V, three-pole, four-wire, **NEMA L14-30R**<br>Two-pole, 30 A breaker | **H** | | 20 A, 250 V, two-pole, three-wire, **NEMA L6-20R**<br>Two-pole, 20 A breaker |
| **B** | | 50 A, 250 V, two-pole, three-wire, **NEMA L6-50R**<br>Two-pole, 50 A breaker | **E** | | 30 A, 250 V, two-pole, three-wire, **NEMA L6-30R**<br>Two-pole, 30 A breaker | **J** | | 20 A, 125 V, two-pole, three-wire, **NEMA L5-20R**<br>Single-pole, 20 A breaker |
| **C** | | 50 A, 125 V, two-pole, three-wire, **NEMA L5-50R**<br>Single-pole, 50 A breaker | **F** | | 30 A, 125 V, two-pole, three-wire, **NEMA L5-30R**<br>Single-pole, 30 A breaker | | | |

## Product Selection

When quoting or selecting a power outlet panel, the following questions should be answered:

- Unmetered, ring or ringless style
- Number and types of receptacles (seven standard and eight twist-lock options)
- Standard or ground fault breakers
- Surface, pedestal or back-to-back mounting
- Are any factory or field options required?

***Power Outlet Panel Receptacle Configuration Rules***

**Four Receptacles/Unit**
All receptacles must be NEMA 5-20R2 or NEMA 5-20R2GFI, surface mount only.

**Three Receptacles/Unit**

- One or more of the receptacles must be NEMA 6-20R2, NEMA 5-20R2 or NEMA 5-20R2GFI
- NEMA 6-20R2, NEMA 5-20R2, or NEMA 5-20R2GFI must go in the second position
- If two receptacles consist of types NEMA 14-50R, NEMA 10-50R, NEMA 14-30R or NEMA 6-20R2 a six-circuit interior must be added
  - Example: **CHUIN5N2NSX**

**Note:** Configuration 1 and 2 were chosen so a six-circuit interior needs to be added (suffix X) to the end of the catalog number. Also, configuration 5 is in the second position.

**Two, One and Zero Receptacles/Unit**
Any configuration.

## Accessories

### Accessories

| | Description | Catalog Number |
|---|---|---|
| **Underground Pedestal Extension** | Underground pedestal extension | **CHPEDEXT** |
| | Stainless steel underground pedestal extension | **CHPEDEXTSS** |
| **Pad-Mount Bracket** | Pad-mount bracket | **CHPADEXT** |
| **Cable TV/Telephone Bracket** | Cable TV and telephone bracket | **CHTELTV** |
| **DS Hub** | Rainproof conduit hub 0.75 inch (19.1 mm) | **DS075H1** |
| | Rainproof conduit hub 1.00 inch (25.4 mm) | **DS100H1** |
| | Rainproof conduit hub 1.25 inch (31.8 mm) | **DS125H1** |
| | Rainproof conduit hub 1.50 inch (38.1 mm) | **DS150H1** |

**Fluorescent Light Kit**

### Fluorescent Light Kit

| Description | Catalog Number |
|---|---|
| Converts power outlet panel to lighted unit, **must also order CHOUTCVRL** | **CHFLGTKIT** |

## Renewal Parts

### Renewal Parts

| | Description | Catalog Number |
|---|---|---|
| **Circuit Breaker (BR/GFCB)** | See this volume, Tab 1, section 1.2 | — |
| **Meter Socket** | Ring style replacement meter socket | **CHPOPMSRING** |
| | Ringless style replacement meter socket | **CHPOPMSRL** |
| | 5th jaw kit | **ARP00035CHJ** |
| | Horn bypass (one lug cap per kit; four kits required per device) | **ARP00777CH** |
| **Bonding Strap and Mounting Hardware** | Bonding strap and mounting hardware | **CHBONDST** |
| **Inner Lens** | Inner lens for lighted power outlet panels | **CHINLENS** |
| **Loop Feed Lug Assembly** | Loop feed lug assembly for single pedestal | **CHLOOPFDP** |
| | Loop feed lug assembly for back-to-back pedestal | **CHLOOPFDB** |
| **Lower Deadfront Cover** | Blank lower deadfront cover | **CHLDFCVR** |
| | Lower deadfront cover with duplex receptacle opening | **CHLDFCVR1** |
| | Lower deadfront cover with duplex, duplex receptacle opening | **CHLDFCVR2** |
| | Lower deadfront cover with duplex, duplex, duplex receptacle opening | **CHLDFCVR3** |
| | Lower deadfront cover with rectangle receptacle opening | **CHLDFCVR4** |
| | Lower deadfront cover with rectangle, rectangle receptacle opening | **CHLDFCVR5** |
| | Lower deadfront cover with rectangle, rectangle, rectangle receptacle opening | **CHLDFCVR6** |
| | Lower deadfront cover with duplex, rectangle receptacle opening | **CHLDFCVR7** |
| | Lower deadfront cover with duplex, rectangle, duplex receptacle opening | **CHLDFCVR8** |
| | Lower deadfront cover with rectangle, rectangle, duplex receptacle opening | **CHLDFCVR9** |
| | Lower deadfront cover with round receptacle opening | **CHLDFCVR10** |
| | Lower deadfront cover with round, round receptacle opening | **CHLDFCVR11** |
| | Lower deadfront cover with round, duplex receptacle opening | **CHLDFCVR12** |

## Renewal Parts, continued

| | Description | Catalog Number |
|---|---|---|
| | Lower deadfront cover with round, duplex, duplex receptacle opening | **CHLDFCVR13** |
| | Lower deadfront cover with round, duplex, round receptacle opening | **CHLDFCVR14** |
| | Lower deadfront cover with round, rectangle receptacle opening | **CHLDFCVR15** |
| | Lower deadfront cover with round, rectangle, rectangle receptacle opening | **CHLDFCVR16** |
| | Lower deadfront cover with round, rectangle, round receptacle opening | **CHLDFCVR17** |
| | Lower deadfront cover with round, rectangle, duplex receptacle opening | **CHLDFCVR18** |
| **Upper Deadfront Cover** | Upper deadfront cover with six breaker twistouts | **CHUDFCVR** |
| | Upper deadfront cover with provisions for lighted option | **CHUDFCVRL** |
| **Outer Door** | Outer door | **CHOUTCVR** |
| | | |
| **Outer Door with Lens** | Outer door with lens | **CHOUTCVRL** |
| | | |
| **Neutral Assemblies** | Six-hole neutral assembly with 2/0 lug | **CHNEUT** |
| | Seven-hole neutral assembly with 2/0 lug | **CHNEUT1** |
| | Five-hole ground bar kit | **GBK5** |
| | 10-hole ground bar kit | **GBK10** |
| | **Replacement Meter Cover** | |
| | Replacement meter cover—ring type | **CHPOPRMC** |
| | Replacement meter cover—ringless | **CHPOPRLMC** |
| | Replacement meter cover—ringless | **CHPOPRLMCN** |
| | Replacement meter cover—ringless | **CHPOPRLMCN2** |

**Power Outlet Panels**

## Contents


| *Description* | *Page* |
|---|---|
| Product Overview | **V1-T5-3** |
| Surface Units | |
| Dimensions | **V1-T5-13** |
| Pedestal Units | **V1-T5-16** |




## Surface Units

### Product Overview

A power outlet panel (or POP) is a device designed for outdoor service to meet temporary power requirements at construction sites and recreation vehicle (RV) parks. POPs provide a safe and reliable means for users to access electricity at such locations.

### Product Selection

***Power Outlet Panel Receptacle Configuration Rules***

See **Page V1-T5-7** for complete list.

**Four Receptacles/Unit**

All receptacles must be NEMA 5-20R2 and/or NEMA 5-20R2GFI, surface mount only.

**Three Receptacles/Unit**

- One or more of the receptacles must be NEMA 6-20R2, NEMA 5-20R2 or NEMA 5-20R2GFI
- NEMA 6-20R2, NEMA 5-20R2, or NEMA 5-20R2GFI must go in the second position
- If two receptacles consist of types NEMA 14-50R, NEMA 10-50R, NEMA 14-30R or NEMA 6-20R2 a six-circuit interior must be added
  - Example: **CHUIN5N2NSX**

**Note:** Configuration 1 and 2 were chosen so a six-circuit interior needs to be added (suffix X) to the end of the catalog number. Also, configuration 5 is in the second position.

**Two, One and Zero Receptacles/Unit**

Any configuration.

**Options**

- Six-circuit interior
- Factory-mounted pedestal extension
- Lighted
- Bottom fed

## Surface Type

Single Receptacle CHU4S

Unmetered Type CHU1N7N4NS

Unmetered (Compact Version)

| Ampere Series | Receptacle Description Position Left | Center | Right | Breaker Description 1st | 2nd | 3rd | Catalog Number |
|---|---|---|---|---|---|---|---|
| **Unmetered Single Receptacle** | | | | | | | |
| 50 | — | 14-50R | — | No breaker | No breaker | No breaker | **CHU1S** |
| 30 | — | 14-30 R | — | No breaker | No breaker | No breaker | **CHU3S** |
| 30 | — | TT-30R | — | No breaker | No breaker | No breaker | **CHU4S** |
| 20 | — | 6-20R2 | — | No breaker | No breaker | No breaker | **CHU5S** |
| 20 | — | 5-20R2 | — | No breaker | No breaker | No breaker | **CHU6S** |
| 20 | — | 5-20R2GFI | — | No breaker | No breaker | No breaker | **CHU7S** |
| **Unmetered** | | | | | | | |
| 20/20/20 | 5-20R2 | 5-20R2 | 6-20R2 | GFI | GFI | GFI | **CHU6G6G5GS** |
| 20/20/20 | 5-20R2WR | 5-20R2WR | 6-20R2WR | GFI | GFI | GFI | **CHU2G2GKGS** |
| 20/20/20 | 5-20R2GFI | 5-20R2GFI | 6-20R2 | Non-GFI | Non-GFI | Non-GFI | **CHU7N7N5NS** |
| 20/20/20 | 5-20R2GFIWR | 5-20R2GFIWR | 6-20R2WR | Non-GFI | Non-GFI | Non-GFI | **CHU8N8NKNS** |
| 20/20/20 | 5-20R2GFI | 5-20R2GFI | 6-20R2 | Non-GFI | Non-GFI | GFI | **CHU7N7N5GS** |
| 20/20/20 | 5-20R2GFIWR | 5-20R2GFIWR | 6-20R2WR | Non-GFI | Non-GFI | GFI | **CHU8N8NKGS** |
| 50/20/30 | 14-50R | 5-20R2GFI | TT-30R | Non-GFI | Non-GFI | Non-GFI | **CHU1N7N4NS** |
| 50/20/30 | 14-50R | 5-20R2GFI | 6-20R | GFI | Non-GFI | Non-GFI | **CHU1G7N7NS** |
| 50/20 | 14-50R | 5-20RGFI | — | GFI | Non-GFI | — | **CHU1G7NS** |
| 50/20 | 14-50R | 5-20RGFI | — | Non-GFI | Non-GFI | — | **CHU1N7NS** |
| 50/20/50 | 14-50R | 5-20R2GFI | 14-50R | Non-GFI | Non-GFI | Non-GFI | **CHU1N7N1NSX** ① |
| 30/30/20 | TT-30R | 5-20R2GFI | TT-30R | Non-GFI | Non-GFI | Non-GFI | **CHU4N7N4NS** |
| 20/20/20 | 5-20R2 | 5-20R2 | 6-20R2 | GFI | GFI | GFI | **CHU6G6G5GS60M** ② |
| **Unmetered (Compact Version)** | | | | | | | |
| 50 | 14-50R | — | — | Non-GFI | — | — | **CHU1NS** |
| 20 | 5-20R2 | — | — | Non-GFI | — | — | **CHU2NS** |
| 30 | TT-30R | — | — | GFI | — | — | **CHU4GS** |
| 30/30 | TT-30R | TT-30R | — | Non-GFI | Non-GFI | — | **CHU4N4NS** |
| 30/20 | TT-30R | 5-20R2 | — | Non-GFI | Non-GFI | — | **CHU4N6NS** |
| 30/20 | TT-30R | 5-20R2GFI | — | Non-GFI | Non-GFI | — | **CHU4N7NS** |
| 30 | TT-30R | — | — | Non-GFI | — | — | **CHU4NS** |
| 20 | 6-20R2 | — | — | GFI | — | — | **CHU5GS** |
| 20/20 | 5-20R2 | 5-20R2 | — | GFI | GFI | — | **CHU6G6GS** |
| 20 | 5-20R2 | — | — | GFI | — | — | **CHU6GS** |
| 20/20 | 5-20R2 | 5-20R2 | — | Non-GFI | Non-GFI | — | **CHU6N6NS** |
| 20 | 5-20R2 | — | — | Non-GFI | — | — | **CHU6NS** |
| 20/20 | 5-20R2GFI | 5-20R2GFI | — | Non-GFI | Non-GFI | — | **CHU7N7NS** |
| 20 | 5-20R2GFI | — | — | Non-GFI | — | — | **CHU7NS** |

***Notes***

① The "X" suffix indicates that a six circuit interior is provided, instead of the standard four circuit interior.

② Includes 60 A two-pole main breaker for service disconnect ratings.

Contact your local Eaton sales office for configurations not listed.

## Surface Type, continued

**Metered Ring CHM1G7NS**

**Metered Ringless Type CHR4N7NS**

**Metered Ring or Ringless Type Bottom Feed**

| Ampere Series | Receptacle Description Position Left | Center | Right | Breaker Description 1st | 2nd | 3rd | Catalog Number |
|---|---|---|---|---|---|---|---|
| **Metered—Ring** | | | | | | | |
| 50/20/20 | 14-50R | 5-20R2GFI | 5-20R2GFI | GFI | Non-GFI | Non-GFI | **CHM1G7N7NS** |
| 20/20 | 5-20R2GFI | 5-20R2GFI | — | Non-GFI | Non-GFI | — | **CHM7N7NS** |
| 20/20/20 | 5-20R2GFI | 5-20R2GFI | 6-20R2 | Non-GFI | Non-GFI | GFI | **CHM7N7N5GS** |
| 20/20/20 | 5-20R2GFI | 5-20R2GFI | 6-20R2 | Non-GFI | Non-GFI | Non-GFI | **CHM7N7N5NS** |
| 50/30/20 | 14-50R | 5-20R2GFI | TT-30R | Non-GFI | Non-GFI | Non-GFI | **CHM1N7N4NS** |
| 50/20 | 14-50R | 5-20R2GFI | — | Non-GFI | Non-GFI | — | **CHM1N7NS** |
| 20/20 | 6-20R2 | 5-20R2GFI | — | Non-GFI | Non-GFI | Non-GFI | **CHM5N7NS** |
| **Metered—Ringless** | | | | | | | |
| 50/20 | 14-50R | 5-20R2GFI | — | GFI | Non-GFI | — | **CHR1G7NS** |
| 20/20 | 5-20R2GFI | 5-20R2GFI | — | Non-GFI | Non-GFI | — | **CHR7N7NS** |
| 50/20/20 | 14-50R | 5-20R2GFI | 5-20R2GFI | GFI | Non-GFI | Non-GFI | **CHR1G7N7NS** |
| 50/20 | 14-50R | 5-20R2GFI | — | Non-GFI | Non-GFI | — | **CHR1N7NS** |
| 20/20/20 | 5-20R2GFI | 5-20R2GFI | 5-20R2GFI | Non-GFI | Non-GFI | Non-GFI | **CHR7N7N7NS** |
| 20/20/20 | 5-20R2WR | 5-20R2WR | 6-20R2WR | GFI | GFI | GFI | **CHR2G2GKGS** |
| 30/20/20 | 14-30R | 5-20R2GFI | 5-20R2GFI | Non-GFI | Non-GFI | Non-GFI | **CHR3N7N7NS** |
| 50/30/20 | 14-50R | 5-20R2GFI | TT-30R | Non-GFI | Non-GFI | Non-GFI | **CHR1N7N4NS** |
| **Metered—Ring—Bottom Fed** | | | | | | | |
| 20/20 | 5-20R2GFI | 5-20R2GFI | — | Non-GFI | Non-GFI | — | **CHM7N7NSU** |
| 20/20/20 | 5-20R2GFI | 5-20R2GFI | 6-20R2 | Non-GFI | Non-GFI | GFI | **CHM7N7N5GSU** |
| 50/20/20 | 14-50R | 5-20R2GFI | 5-20R2GFI | GFI | Non-GFI | Non-GFI | **CHM1G7N7NSU** |
| **Metered—Ringless—Bottom Fed** | | | | | | | |
| 20/20 | 5-20R2GFI | 5-20R2GFI | — | Non-GFI | Non-GFI | — | **CHR7N7NSU** |
| 50/20 | 14-50R | 5-20R2GFI | — | GFI | Non-GFI | — | **CHR1G7NSU** |
| 50/20 | 10-50R | 5-20R2GFI | — | GFI | Non-GFI | — | **CHR2G7NSU** |
| 20/20/20 | 5-20R2WR | 5-20R2WR | 6-20R2WR | GFI | GFI | GFI | **CHR2G2GKGSU** |
| 20/20/20 | 5-20R2GFI | 5-20R2GFI | 6-20R2 | Non-GFI | Non-GFI | GFI | **CHR7N7N5GSU** |
| 20/20/20 | 5-20R2GFI | 5-20R2GFI | 6-20R2 | Non-GFI | Non-GFI | Non-GFI | **CHR7N7N5NSU** |
| 20/20/20 | 5-20R2GFI | 5-20R2GFI | 5-20R2GFI | Non-GFI | Non-GFI | Non-GFI | **CHR7N7N7NSU** |
| 30/20/20 | 14-30R | 5-20R2GFI | 5-20R2GFI | Non-GFI | Non-GFI | Non-GFI | **CHR3N7N7NSU** |
| 30/20/20 | 14-30R | 5-20R2GFI | 5-20R2GFI | GFI | Non-GFI | Non-GFI | **CHR3G7N7NSU** |
| 50/20/20 | 14-50R | 5-20R2GFI | 5-20R2GFI | GFI | Non-GFI | Non-GFI | **CHR1G7N7NSU** |
| 50/20/30 | 14-50R | 5-20R2GFI | TT-30R | Non-GFI | Non-GFI | Non-GFI | **CHR1N7N4NSU** |

### Accessories

See **Page V1-T5-7**.

## Dimensions

Approximate Dimensions in Inches (mm)

### Single Receptacle

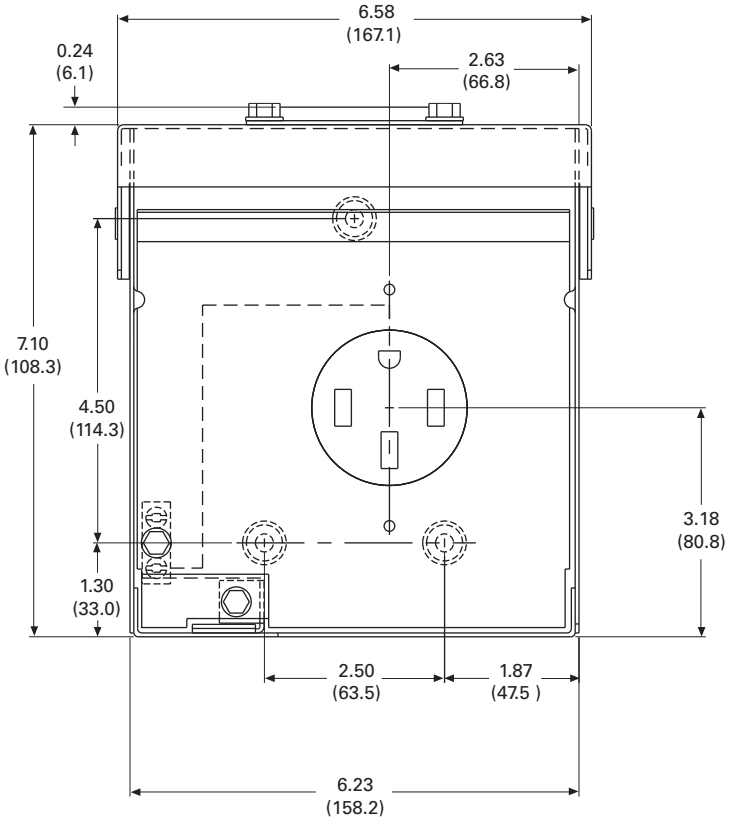


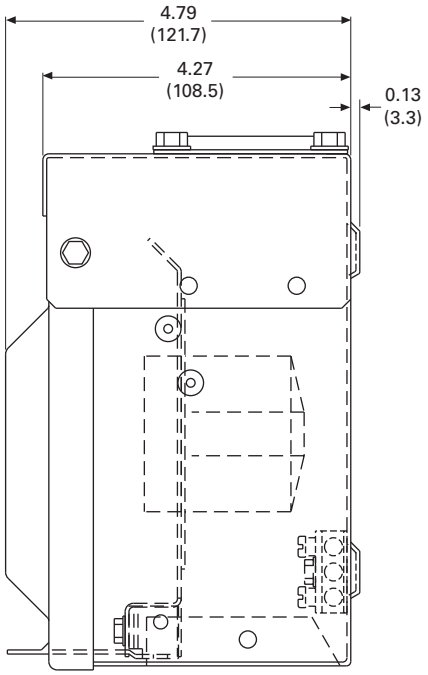

Approximate Dimensions in Inches (mm)

## Compact Design Option

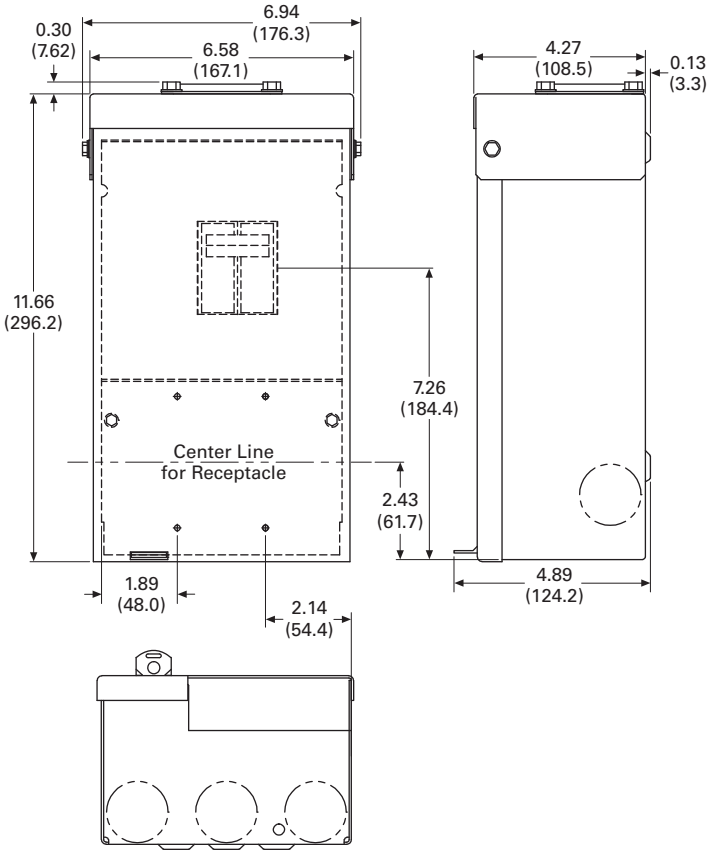


***Unmetered Units***

## Unmetered Surface Type

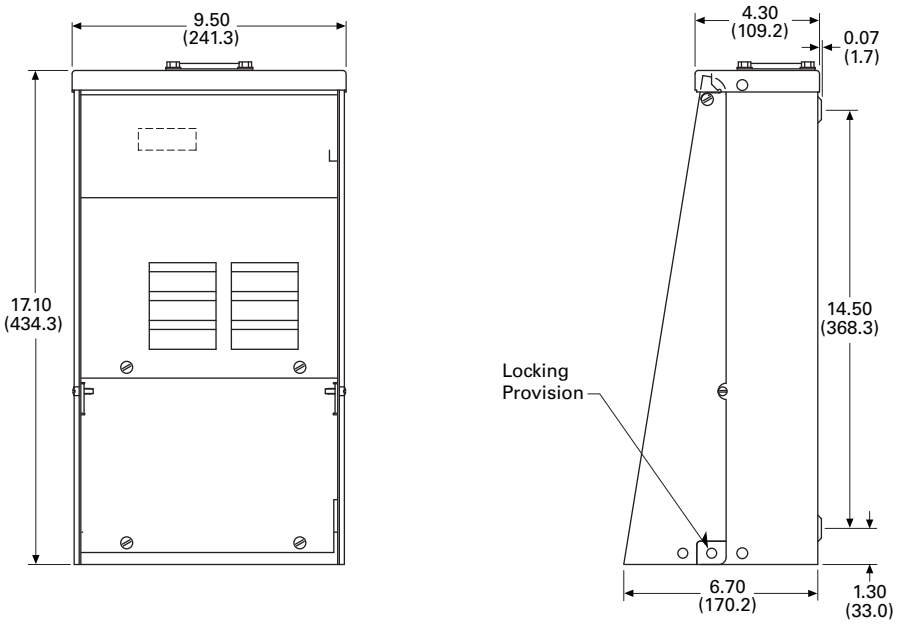

Approximate Dimensions in Inches (mm)

***Metered Units (Ring and Ringless)***

## Metered Surface Type

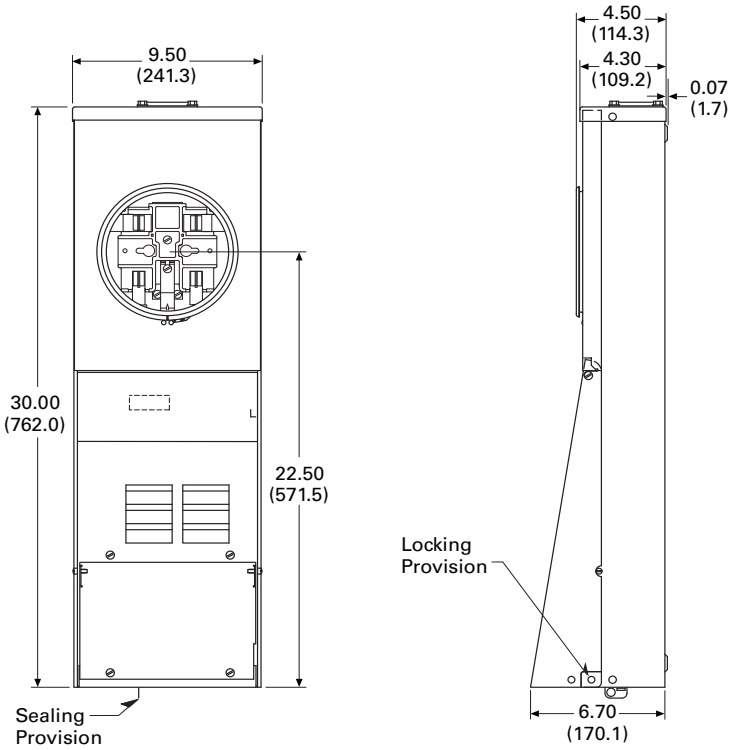


## Bottom Fed Type

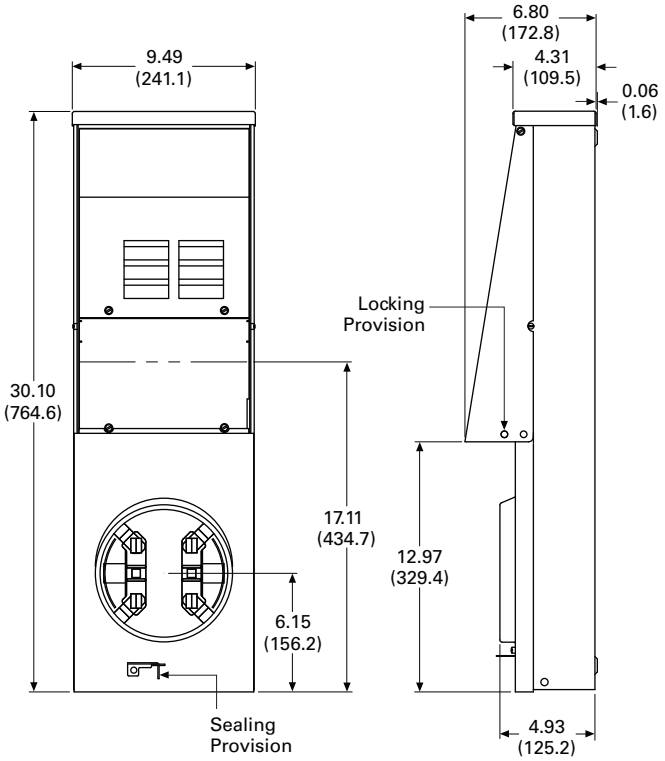

**Power Outlet Panels**

## Contents


| *Description* | *Page* |
|---|---|
| Product Overview | **V1-T5-3** |
| Surface Units | **V1-T5-10** |
| Pedestal Units | **V1-T5-16** |
| Dimensions | **V1-T5-18** |




## Pedestal Units

### Product Overview

A power outlet panel (or POP) is a device designed for outdoor service to meet temporary power requirements at construction sites and recreation vehicle (RV) parks. POPs provide a safe and reliable means for users to access electricity at such locations.

### Product Selection

***Power Outlet Panel Receptacle Configuration Rules***

See **Page V1-T5-7** for complete list.

**Four Receptacles/Unit**

All receptacles must be NEMA 5-20R2 and/or NEMA 5-20R2GFI, surface mount only.

**Three Receptacles/Unit**

- One or more of the receptacles must be NEMA 6-20R2, NEMA 5-20R2 or NEMA 5-20R2GFI
- NEMA 6-20R2, NEMA 5-20R2, or NEMA 5-20R2GFI must go in the second position
- If two receptacles consist of types NEMA 14-50R, NEMA 10-50R, NEMA 14-30R or NEMA 6-20R2 a six-circuit interior must be added
  - Example: **CHUIN5N2NSX**

**Note:** Configuration 1 and 2 were chosen so a six-circuit interior needs to be added (suffix X) to the end of the catalog number. Also, configuration 5 is in the second position.

**Two, One and Zero Receptacles/Unit**

Any configuration.

**Options**

- Six-circuit interior
- Factory-mounted pedestal extension
- Lighted
- Bottom fed

Unmetered Type

CHM1N7N4NPTZ

## Pedestal Type

| Ampere Series | Receptacle Description Position Left | Center | Right | Breaker Description 1st | 2nd | 3rd | Catalog Number |
|---|---|---|---|---|---|---|---|
| **Unmetered** | | | | | | | |
| 50/30/20 | 14-50R | 5-20R2GFI | TT-30R | Non-GFI | Non-GFI | Non-GFI | **CHU1N7N4NP** |
| 30/20 | TT-30R | 5-20R2GFI | — | Non-GFI | Non-GFI | — | **CHU4N7NP** |
| 50/30/20 | 14-50R | 5-20R2GFI | TT-30R | Non-GFI | Non-GFI | Non-GFI | **CHU1N7N4NPTZ** |
| 30/30/20 | TT-30R | 5-20R2GFI | TT-30R | Non-GFI | Non-GFI | Non-GFI | **CHU4N7N4NP** |
| 30/20 | TT-30R | 5-20R2GFI | — | Non-GFI | Non-GFI | — | **CHU4N7NPTZ** |
| **Metered—Ring** | | | | | | | |
| 50/30/20 | 14-50R | 5-20R2GFI | TT-30R | Non-GFI | Non-GFI | Non-GFI | **CHM1N7N4NP** |
| 50/20 | 14-50R | 5-20R2GFI | — | Non-GFI | Non-GFI | — | **CHM1N7NP** |
| 50/30/20 | 14-50R | 5-20R2GFI | TT-30R | Non-GFI | Non-GFI | Non-GFI | **CHM1N7N4NPTZ** |
| 30/20 | TT-30R | 5-20R2GFI | — | Non-GFI | Non-GFI | — | **CHM4N7NPTZ** |
| **Metered—Ringless** | | | | | | | |
| 50/30/20 | 14-50R | 5-20R2GFI | TT-30R | Non-GFI | Non-GFI | Non-GFI | **CHR1N7N4NP** |
| 50/20/50 | 14-50R | 5-20R2GFI | 14-50R | Non-GFI | Non-GFI | Non-GFI | **CHR1N7N1NPX** |
| 50/20/30 | 14-50R | 5-20R2GFI | 14-30R | Non-GFI | Non-GFI | Non-GFI | **CHR1N7N3NPX** |
| 50/20/30 | 14-50R | 5-20R2 | 14-30R | Non-GFI | Ground fault | Non-GFI | **CHR1N6G3NPX** |

CHU1N7N4NBTZ

## Back-to-Back Pedestal Type

| Ampere Series | Receptacle Description Position Left | Center | Right | Breaker Description 1st | 2nd | 3rd | Catalog Number |
|---|---|---|---|---|---|---|---|
| **Unmetered** ① | | | | | | | |
| 30/30/20 | TT-30R | 5-20R2GFI | TT-30R | Non-GFI | Non-GFI | Non-GFI | **CHU4N7N4NB** |
| 50/30/20 | 14-50R | 5-20R2GFI | TT-30R | Non-GFI | Non-GFI | Non-GFI | **CHU1N7N4NBTZ** |
| **Metered—Ring** ① | | | | | | | |
| 30/20 | TT-30R | 5-20R2GFI | — | Non-GFI | Non-GFI | — | **CHM4N7NB** |
| 50/30/20 | 14-50R | 5-20R2GFI | TT-30R | Non-GFI | Non-GFI | Non-GFI | **CHM1N7N4NB** |
| **Metered—Ringless** ① | | | | | | | |
| 50/30/20 | 14-50R | 5-20R2GFI | TT-30R | Non-GFI | Non-GFI | Non-GFI | **CHR1N7N4NBTZ** |

***Notes***

① The pedestal back-to-back units have receptacles and circuit breakers as shown for each panel and share one common pedestal with loop feed lugs. Contact your local Eaton sales office for configurations not listed.

## Accessories

See **Page V1-T5-7**.

## Dimensions

Approximate Dimensions in Inches (mm)

***Metered Units***

**100 A Pedestal**

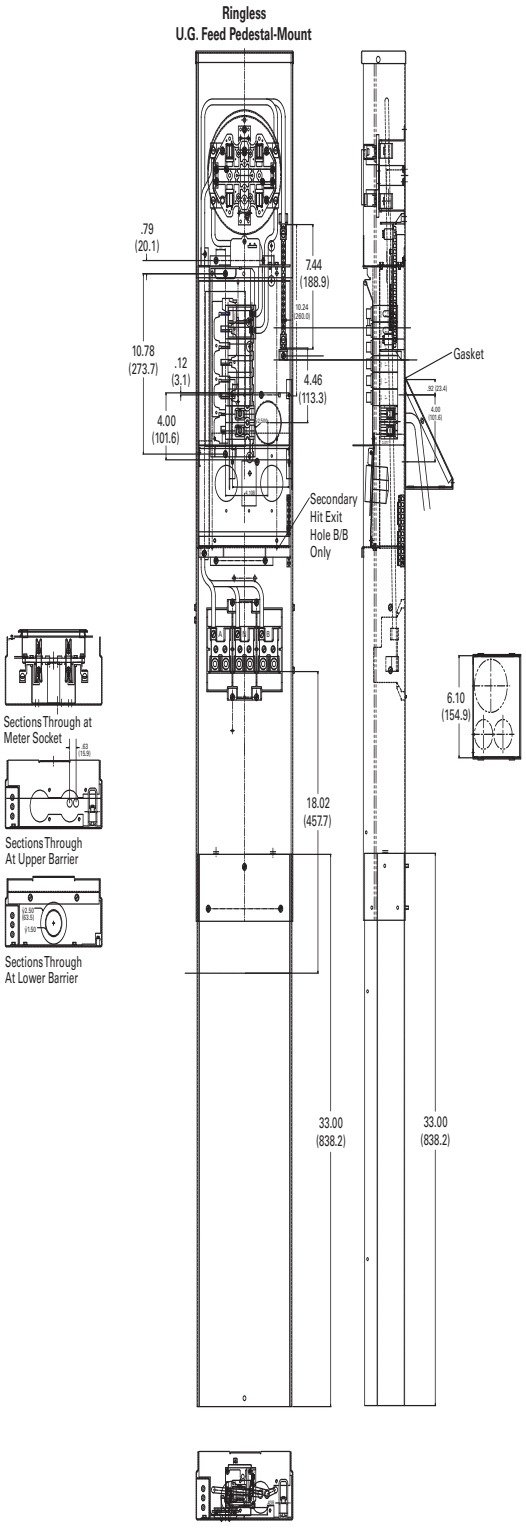

Approximate Dimensions in Inches (mm)

***Metered Units (Ring and Ringless)***

## Metered Back-to-Back Pedestal Type

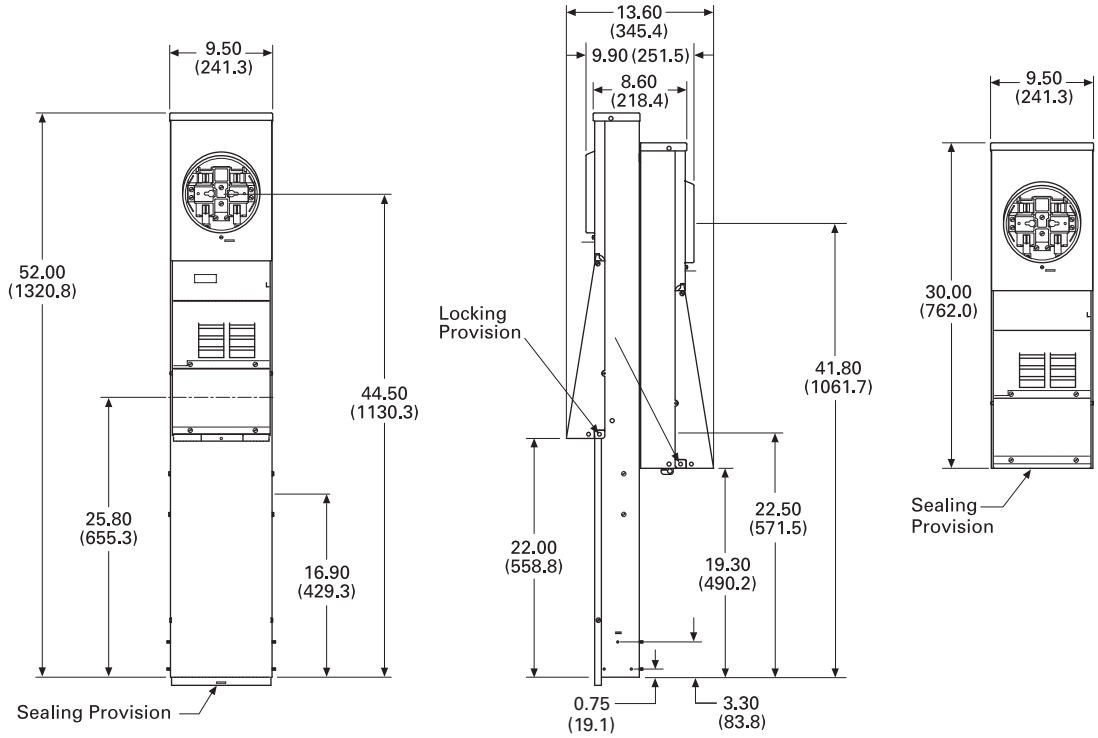


## Bottom Fed Type

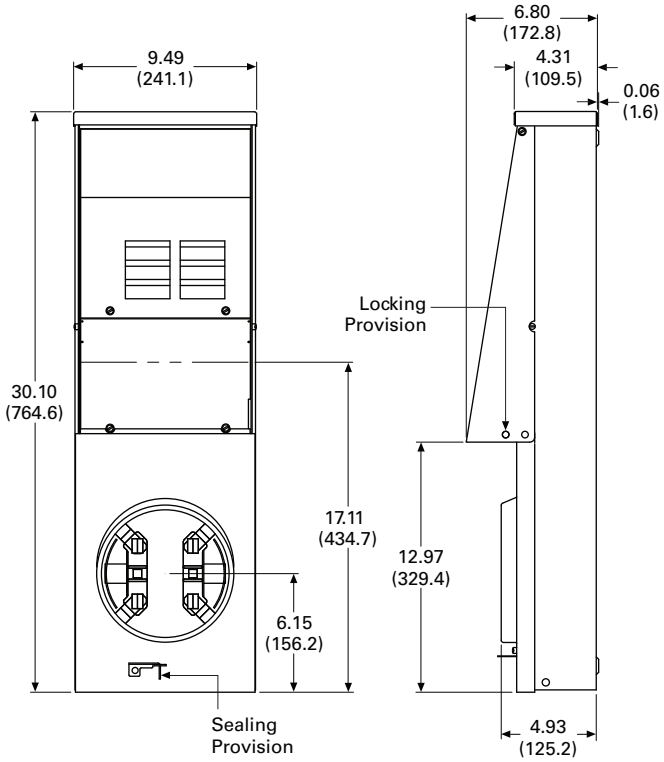

Approximate Dimensions in Inches (mm)

### Unmetered Back-to-Back Pedestal Type

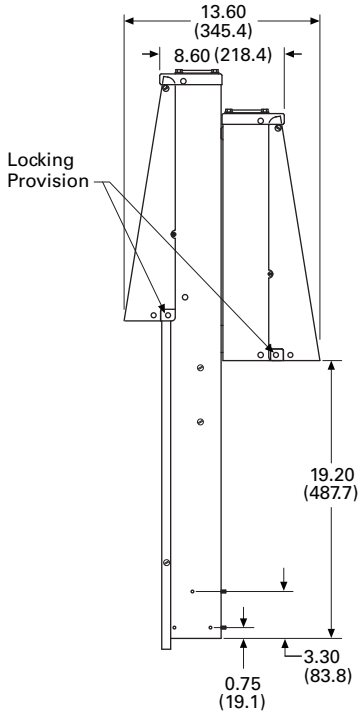


### Unmetered Pedestal Type

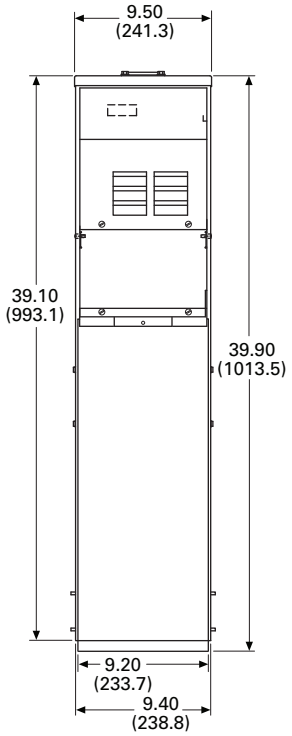


### Metered Pedestal Type

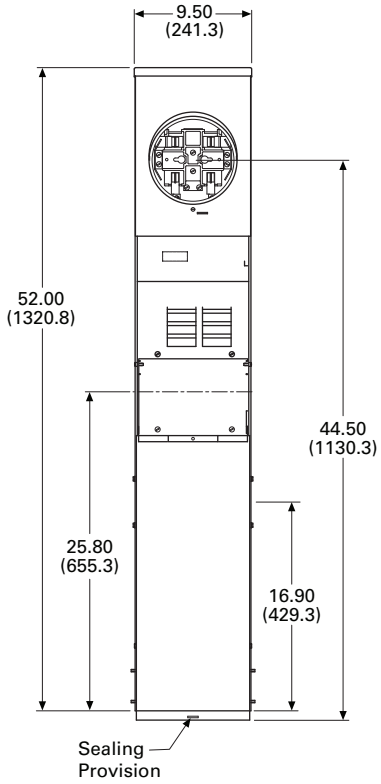


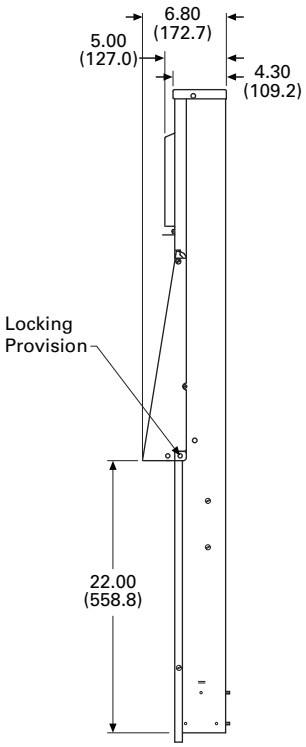

**Power Outlet Panels**

## Contents

| *Description* | *Page* |
|---|---|
| Mobile Home Panels | |
| Catalog Number Selection | **V1-T5-22** |
| Product Selection | **V1-T5-22** |
| Accessories | **V1-T5-23** |
| Dimensions | **V1-T5-24** |



## Product Overview

Eaton's versatile Mobile Home Panels have a user-friendly design that allows for a faster, cleaner installation.

100 and 200 A panels come complete with the main breaker and a 4/8 or 8/16 interior, respectively. The 200 A units are designed with ample width to ensure plenty of room for wire bending and an easier installation.

### Receptacle Deadfront Kits

Optional receptacle deadfront kits enable the field installation of contractor supplied receptacles and breakers that can supply power for a variety of applications including:

- Visiting RVs
- Temporary power
- Lawn equipment
- Air compressors
- Anything else that requires cord-connected power

## Features

### Fastenerless Socket Design

- Eliminates overheating caused by loose socket connections

### Pedestal Unit

- Convenient and sturdy ground mounting
- Loop feed feature allows several units to be connected in series

### Easier, Better and Faster Installation

- More wire bending and viewing room
- Additional circuits mean more flexibility

## Catalog Number Selection

### Mobile Home Panels

**MH M 100 P 1 N 4 N**

**Type**
**MH** = Mobile Home Panel

**Metering Type**
**M** = Metered-ring
**R** = Metered-ringless

**Amperes**
**100**
**150**
**200**

**Mounting**
**P** = Pedestal
**B** = Back-to-back

**Optional Receptacle Type Position 1**
**1** = NEMA 14-50R
**3** = NEMA 14-30R
**4** = NEMA TT-30R
**5** = NEMA 6-20R2
**6** = NEMA 5-20R2
**7** = NEMA 5-20R2GFI
**8** = NEMA 5-20R2GFI (WR)
**9** = NEMA 5-20R2GFI (WR/TR)
**Blank** = No receptacle

**Circuit Breaker Type Position 1**
**N** = Non-ground fault
**G** = Ground fault

**Optional Receptacle Type Position 2**
**1** = NEMA 14-50R
**3** = NEMA 14-30R
**4** = NEMA TT-30R
**5** = NEMA 6-20R2
**6** = NEMA 5-20R2
**7** = NEMA 5-20R2GFI
**8** = NEMA 5-20R2GFI (WR)
**9** = NEMA 5-20R2GFI (WR/TR)
**Blank** = No receptacle

**Circuit Breaker Type Position 2**
**N** = Non-ground fault
**G** = Ground fault

## Product Selection

**Mobile Home Panel**

### Mobile Home Panels ①

| Amperes | Security | Interior | Main | Branch Breakers | Mounting | Receptacles | Catalog Number |
|---|---|---|---|---|---|---|---|
| 100 | Ring | 4/8 | **BR2100** | BR | Pedestal | None | **MHM100P** |
| 100 | Ring | 4/8 | **BR2100** | BR | Back-to-back | None | **MHM100B** |
| 100 | Ringless | 4/8 | **BR2100** | BR | Pedestal | None | **MHR100P** |
| 100 | Ringless | 4/8 | **BR2100** | BR | Back-to-back | None | **MHR100B** |
| 150 | Ring | 8/16 | **CSR2150** | BR | Pedestal | None | **MHM150P** |
| 150 | Ring | 8/16 | **CSR2150** | BR | Back-to-back | None | **MHM150B** |
| 150 | Ringless | 8/16 | **CSR2150** | BR | Pedestal | None | **MHR150P** |
| 150 | Ringless | 8/16 | **CSR2150** | BR | Back-to-back | None | **MHR150B** |
| 200 | Ring | 8/16 | **CSR2200** | BR | Pedestal | None | **MHM200P** |
| 200 | Ring | 8/16 | **CSR2200** | BR | Back-to-back | None | **MHM200B** |
| 200 | Ringless | 8/16 | **CSR2200** | BR | Pedestal | None | **MHR200P** |
| 200 | Ringless | 8/16 | **CSR2200** | BR | Back-to-back | None | **MHR200B** |
| 200 | Ringless | 8/16 | **CSR2200** | BR | Pedestal | Qty 1 14-50R<br>Qty 2 TT-30R | **MHM200P1N4N4N** |

***Note***
① Pedestal Extension included with Mobile Home Panels.

***Mobile Home Panel Deadfronts for 200 A Units*** ①

### Available Receptacle Deadfront Kits—Receptacles and Breakers Not Included

MHDX

MHDXX

MHDBLANK

MHDZ

MHDZZ

MHDZZZ

MHDZZZZ

MHDY

MHDYY

MHDYYY

MHDYYYY

MHDXZX

MHDZZY

MHDYZ

MHDYZY

MHDXYX

MHDXYY

MHDXY

MHDXZY

MHDXZ

MHDXZZ

## Accessories

### Mobile Home Panels

Hubs not used on mobile home panels.

| Description | Amperes | Catalog Number |
|---|---|---|
| Direct feed kit | — | **MHDFK** |
| Pedestal extension | 200 | **MHPEDEXT** |
| Stainless steel pedestal extension | 200 | **MHPEDEXTSS** |
| Padmount adapter | 200 | **MHPADEXT** |
| Pedestal extension | 100 | **CHPEDEXT100** |
| Stainless steel pedestal extension | 100 | **CHPEDESTSS100** |
| Padmount adapter | 100 | **CHPADEXT100** |

***Note***

① For 100 A units, the accessory Catalog Number would be MHD1____. For example, to order a deadfront to accept one 30 A receptacle (round) in a 100 ampere device, the Catalog Number would be MHD1X.

## Dimensions

Approximate Dimensions in Inches (mm)

### Mobile Home Panel—Ringless—Pedestal Mounting

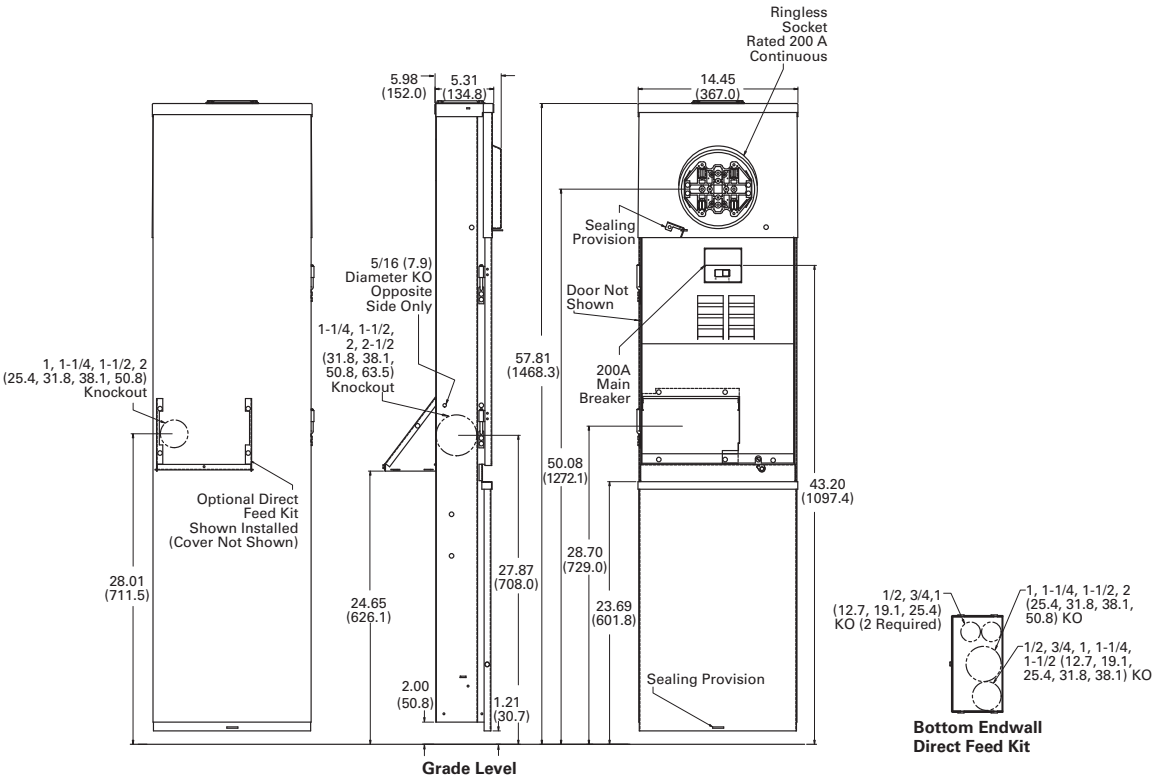

Approximate Dimensions in Inches (mm)

## Mobile Home Panel—Ringless—Back-to-Back Mounting

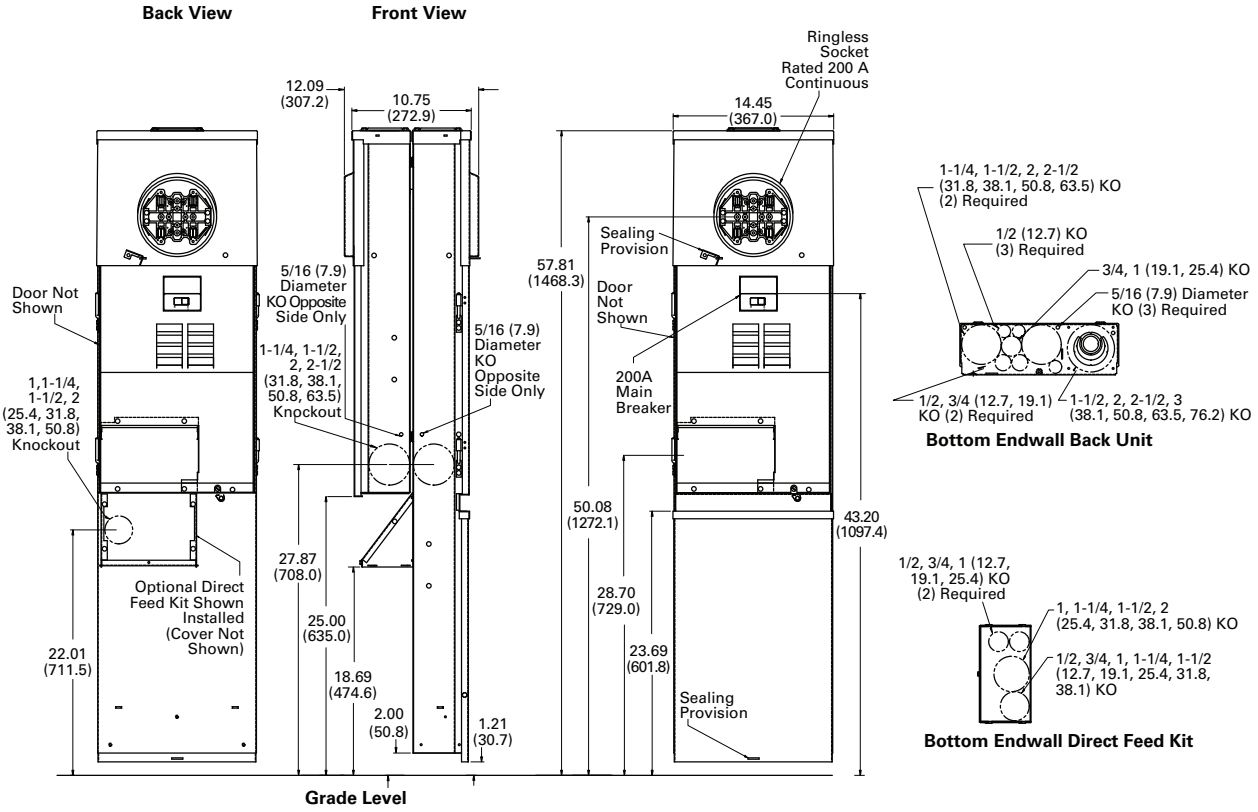

Approximate Dimensions in Inches (mm)

## Mobile Home Panel—Ring—Pedestal Mounting

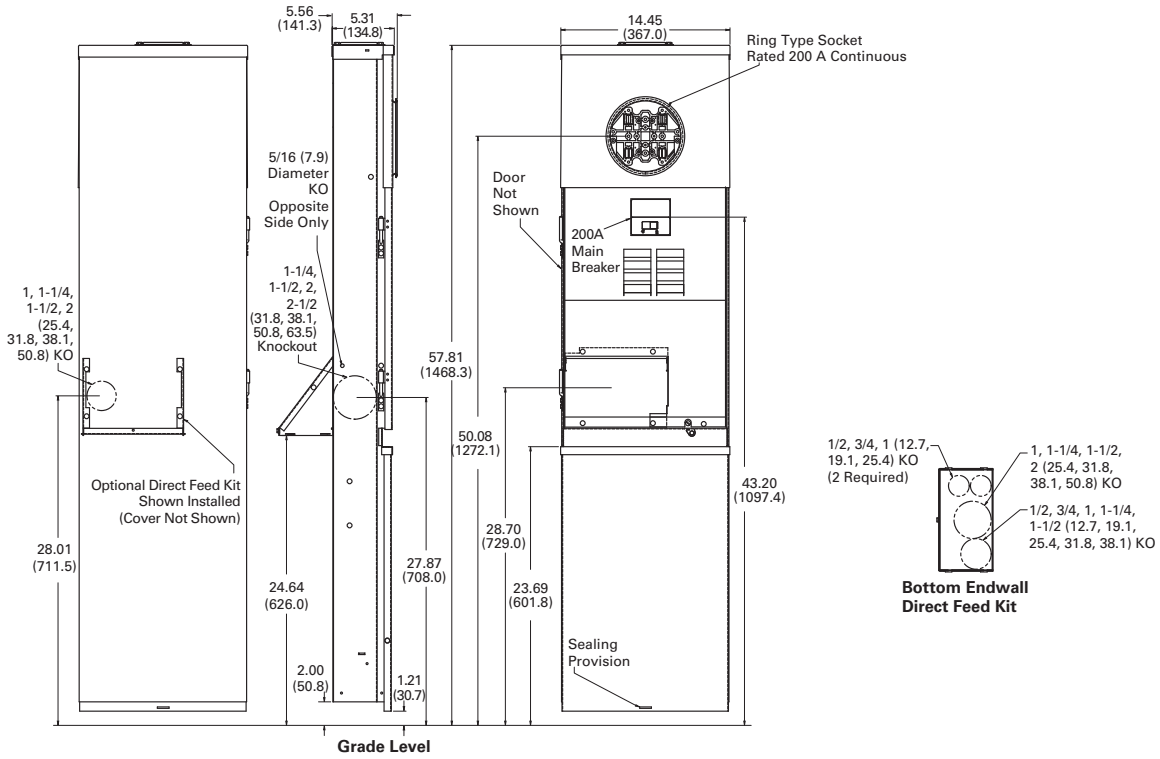

Approximate Dimensions in Inches (mm)

## Mobile Home Panel—Ring—Back-to-Back Mounting

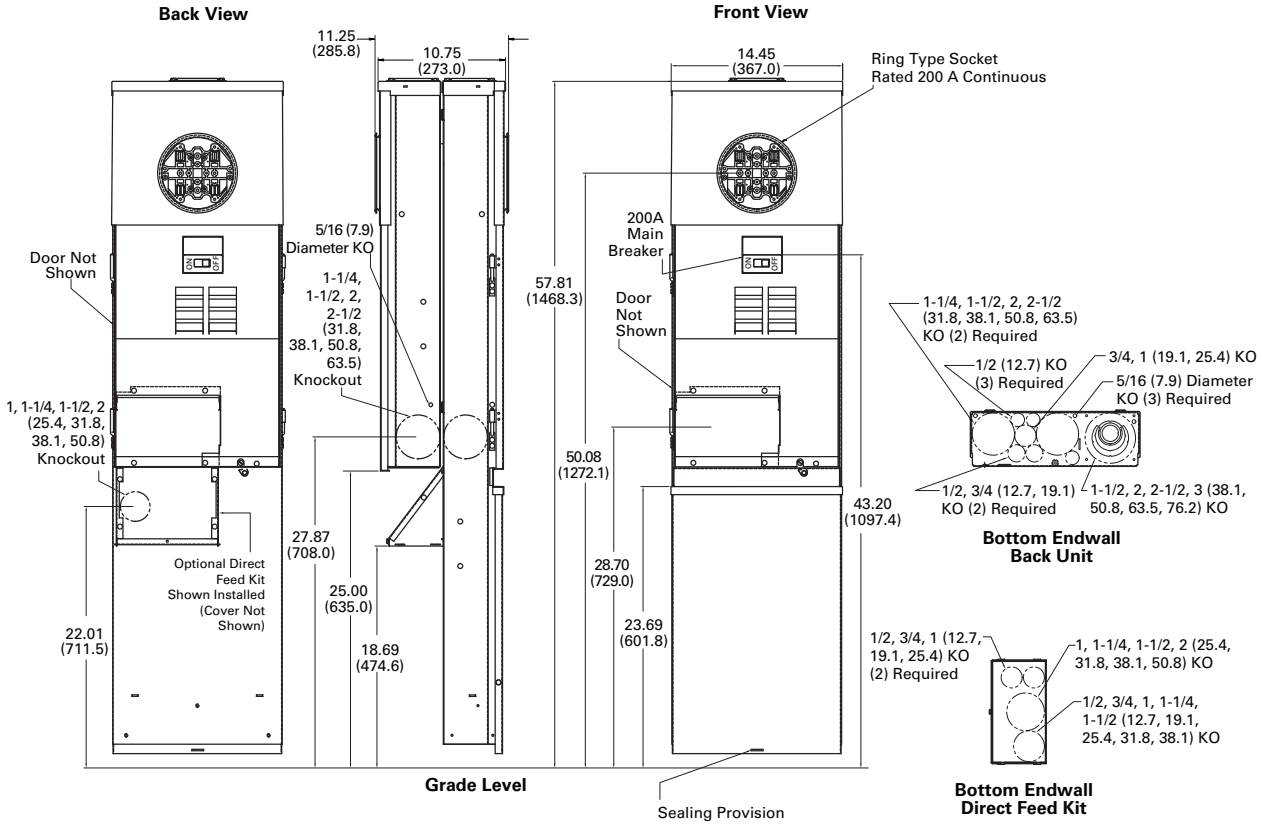

**Recreational Vehicle/Campground Products**

***High-Quality, Weatherproof Electrical Equipment***

## Contents

***Description***

Power Pedestals
Product Selection Guide . . . . . **V1-T5-29**
Powerhouse Power Pedestal . . . . . **V1-T5-30**
Powerhouse—Stainless Steel (SS) Power Pedestal **V1-T5-33**
Newport Camp Mate Power Pedestal . . . . . **V1-T5-36**
Park Light Power Pedestal . . . . . **V1-T5-39**
Firehouse . . . . . **V1-T5-42**
Digital Electronic Kilowatthour Meters . . . . . **V1-T5-44**
Distribution Equipment—Ground Fault Monitor . . **V1-T5-45**
Distribution Equipment—Substations. . . . . **V1-T5-46**
Distribution Equipment—Panels. . . . . **V1-T5-49**
Distribution Equipment—Transformers. . . . . **V1-T5-50**

## Power Pedestals

### Product Overview

On March 24, 2006, RV Park Hook-Ups® joined together with Eaton to provide unmatched products and services in the recreational vehicle industry, as well as the marina industry. Known as the leader in electrical control, power distribution, and industrial automation products and services, Eaton is a quality driven company that constantly looks for ways to provide enhanced products and service solutions for their customers. Eaton will be able to provide RV park developers a complete electrical solution. For more information on the other products available from Eaton, visit us online at www.eaton.com or www.rvparkhookups.com

***What Eaton has to Offer***

- Complementary comprehensive in-house electrical designs for your complete RV or marina development
- RV and marina power pedestals
- Custom substations
- Transformers
- Panels
- Wire
- Digital electronic meters
- Receptacles and breakers
- Specialized electrical parts and equipment

## Product Selection Guide

### Power Receptacles

| Power Outlets | | | Maximum GFI | | | |
|---|---|---|---|---|---|---|
| **Side One** | **Side Two** | **Phase** | **Powerhouse** | **Powerhouse–SS** | **Newport Camp Mate** | **Park Light** |
| None | None | 1 | 2 | 2 | 2 | 2 |
| 30–20 | 00 | 1 | 2 | 2 | 1 | 1 |
| 30–20 | 30–20 | 1 | 2 | 2 | — | — |
| 30–30–20 | 30–30–20 | 1 | 2 | 2 | — | — |
| 30–20 | 50–20 | 1 | 2 | 2 | — | — |
| 30–30–20 | 50–20 | 1 | 2 | 2 | — | — |
| 30–30–20 | 30–50–20 | 1 | 2 | 2 | — | — |
| 30–30–20 | 50–50–20 | 1 | 2 | 2 | — | — |
| 30–50–20 | 30–50–20 | 1 | 2 | 2 | — | — |
| 30–50–20 | 50–50–20 | 1 | 2 | 2 | — | — |
| 50–20 | None | 1 | 2 | 2 | — | — |
| 50–20 | 50–20 | 1 | 2 | 2 | — | — |
| 50–50–20 | 50–20 | 1 | 2 | 2 | — | — |
| 50–50–20 | 50–50–20 | 1 | 2 | 2 | — | — |
| 30–50–20 | None | 1 | 2 | 2 | 0 | — |

**Powerhouse Power Pedestal**

## Contents


| *Description* | *Page* |
|---|---|
| Power Pedestals | **V1-T5-28** |
| Powerhouse Power Pedestal | |
| Standards and Certifications | **V1-T5-31** |
| Catalog Number Selection | **V1-T5-31** |
| Accessories | **V1-T5-32** |
| Dimensions | **V1-T5-32** |
| Powerhouse—Stainless Steel (SS) Power Pedestal | **V1-T5-33** |
| Newport Camp Mate Power Pedestal | **V1-T5-36** |
| Park Light Power Pedestal | **V1-T5-39** |
| Firehouse | **V1-T5-42** |
| Digital Electronic Kilowatthour Meters | **V1-T5-44** |
| Distribution Equipment—Ground Fault Monitor | **V1-T5-45** |
| Distribution Equipment—Substations | **V1-T5-46** |
| Distribution Equipment—Panels | **V1-T5-49** |
| Distribution Equipment—Transformers | **V1-T5-50** |


## Powerhouse Power Pedestal

### Product Description

The Powerhouse® RV utility center is our most popular pedestal for single or double RV sites because of its full complement of standard features and available option packages able to meet any user requirement. The housing is made of durable weatherproof engineered resin and will never rust or deteriorate.

That's why it comes with a limited lifetime warranty. Since the Powerhouse can accommodate two RV sites, it's an economical pedestal for double site installation. This unit is ideal for new, or when retrofitting, full-service RV parks.

### Features

- Photocell controlled 13 watt fluorescent light with amber lens
- Lockable weatherproof doors that protect receptacles and breakers
- Hose and cable brackets
- Engineered resin housing with a two-part polyurethane coating for a UV-resistant, long-lasting finish
- Limited lifetime warranty on the housing
- Loop-feed mechanical busbars that can accept up to 250 kcmil wire
- Hinged pedestal base providing easy access for installation and maintenance

***Surge Protection***

SurgeTrap is designed to protect electrical and electronic loads from transients and surge disturbances on your AC power line, such as voltage surges, spikes and lighting. The SurgeTrap has a lifetime warranty where Eaton will replace the SurgeTrap device at no charge.

- 175 kA maximum surge current
- 3500 joules
- Type 3R enclosure
- Comes with a protection working indicator light
- Factory installed integral to pedestal or available for retrofit

### Available Options

- Clear lens
- Photocell controlled single or dual 7 watt or 13 watt fluorescent light
- Telephone (RJ-11) for each side
- Cable TV for each side
- High-speed Internet connector (RJ-45) for each side
- Water—single or dual 1/4-turn brass ball valves (brass "T" connection) with 3/4-inch hose bibs
- Water meters with remote capability
- Water—anti-siphon faucet
- Loop-feed 3/8-inch stud lug copper busbar for up to 250 kcmil wire (recommended for salt water environments)
- Single-feed mechanical busbars for up to 250 kcmil wire
- Digital electronic meter for each side
- Wireless remote reading of electronic kilowatt meters
- Meter socket for each side powered (to accept glass style meter)
- Direct burial ground mounting stand stainless or galvanized
- Custom paint color

## Standards and Certifications

- UL/CSA listed

Listed

## Catalog Number Selection

**P D U 4 7 0 0 0 0 0 0 1 2 K M**

**Type**

| | |
|---|---|
| **P** | = Powerhouse |
| **Z** | = PHSS |

**Lighting and Lens Color**

| | | |
|---|---|---|
| **A** | = 7 W light | Amber |
| **B** | = Dual 7 W light | Amber |
| **C** | = 9 W light | Amber |
| **D** | = 13 W light | Amber |
| **E** | = Dual 13 W light | Amber |
| **F** | = No lighting | Amber |
| **G** | = 7 W light | Clear |
| **H** | = Dual 7 W light | Clear |
| **I** | = 9 W light | Clear |
| **J** | = 13 W light | Clear |
| **K** | = Dual 13 W light | Clear |
| **L** | = No lighting | Clear |
| **M** | = 7 W light | Special |
| **N** | = Dual 7 W light | Special |
| **O** | = 9 W light | Special |
| **P** | = 13 W light | Special |
| **Q** | = Dual 13 W light | Special |
| **R** | = No lighting | Special |
| **S** | = 350 MA LED | Amber |
| **T** | = 700 MA LED | Amber |
| **U** | = 350 MA LED | Clear |
| **V** | = 700 MA LED | Clear |
| **W** | = 350 MA LED | Special |
| **Y** | = 700 MA LED | Special |

**Metering Type**

| | |
|---|---|
| **U** | = Unmetered |
| **D** | = Digital electronic meters (side one) |
| **T** | = Digital electronic meters (side two) |
| **B** | = Digital electronic meters (both sides) |
| **R** | = Receptacles metered individually |
| **M** | = One meter socket (100 A) |
| **N** | = Two meter socket (100 A each) |

**Sides and Receptacles**

| R1S1 | R2S1 | R3S1 | R4S1 | R1S2 | R2S2 | R3S2 | R4S2 |
|---|---|---|---|---|---|---|---|
| 0 | 0 | 0 | 0 | 0 | 0 | 0 | 0 |
| 1 | 1 | 1 | 1 | 1 | 1 | 1 | 1 |
| 2 | 2 | 2 | 2 | 2 | 2 | 2 | 2 |
| 3 | 3 | 3 | 3 | 3 | 3 | 3 | 3 |
| 4 | 4 | 4 | 4 | 4 | 4 | 4 | 4 |
| 5 | 5 | 5 | 5 | 5 | 5 | 5 | 5 |
| 6 | 6 | 6 | 6 | 6 | 6 | 6 | 6 |
| 7 | 7 | 7 | 7 | 7 | 7 | 7 | 7 |
| 8 | 8 | 8 | 8 | 8 | 8 | 8 | 8 |

| | |
|---|---|
| **0** | = None |
| **1** | = 20 A GFI duplex |
| **2** | = 30 A, 125 V |
| **4** | = 50 A, 125/250 V |
| **5** | = 100 A, 208 V |
| **6** | = 100 A, 250 V |
| **7** | = 100 A, 277/480 V |
| **8** | = 100 A, 480 V |

**Water Option** ①

| | |
|---|---|
| **0** | = 0 |
| **1** | = 1 |
| **2** | = 2 |
| **3** | = Single water meter |
| **4** | = Dual water meter |
| **5** | = Single meter, 2 V |
| **6** | = 1 frost free |
| **7** | = 2 frost free |

**Extra Unmetered GFI Receptacles**

| | |
|---|---|
| **0** | = None |
| **1** | = 1 |
| **2** | = 2 |

**Phone Cable TV and Internet Options**

| | Phone Jack | Cable TV Jack | Internet Option |
|---|---|---|---|
| **A** = | 1 | 0 | 0 |
| **B** = | 1 | 0 | 1 |
| **C** = | 1 | 0 | 2 |
| **D** = | 1 | 1 | 0 |
| **E** = | 1 | 1 | 1 |
| **F** = | 1 | 1 | 2 |
| **G** = | 1 | 2 | 0 |
| **H** = | 1 | 2 | 1 |
| **I** = | 1 | 2 | 2 |
| **J** = | 2 | 0 | 0 |
| **K** = | 2 | 0 | 1 |
| **L** = | 2 | 0 | 2 |
| **M** = | 2 | 1 | 0 |
| **N** = | 2 | 1 | 1 |
| **O** = | 2 | 1 | 2 |
| **P** = | 2 | 2 | 0 |
| **Q** = | 2 | 2 | 1 |
| **R** = | 2 | 2 | 2 |
| **S** = | 0 | 2 | 2 |
| **T** = | 0 | 0 | 1 |
| **U** = | 0 | 0 | 2 |
| **V** = | 0 | 1 | 0 |
| **W** = | 0 | 1 | 1 |
| **X** = | 0 | 1 | 2 |
| **Y** = | 0 | 2 | 0 |
| **Z** = | 0 | 2 | 1 |
| **0** = | 0 | 0 | 0 |

**Bus**

| | |
|---|---|
| **S** | = Single-phase 3/8-inch copper busbar |
| **F** | = Three-phase 3/8-inch copper busbar |
| **C** | = Single-phase 3/8-inch Canadian busbar |
| **T** | = Three-phase 3/8-inch Canadian busbar |
| **M** | = Single-phase 300 kcmil mechanical lug bus |
| **Z** | = Three-phase 300 kcmil mechanical lug bus |
| **L** | = Single-phase 350 kcmil mechanical lug bus |
| **P** | = Three-phase 350 kcmil mechanical lug bus |
| **N** | = Single-phase 1/4-inch copper busbar |
| **Q** | = Single-phase 1/4-inch split mechanical busbar |
| **A** | = Single-phase 300 kcmil mechanical lug Canadian bus |
| **B** | = Three-phase 300 kcmil mechanical lug Canadian bus |
| **D** | = Single-phase 350 kcmil mechanical lug Canadian bus |
| **E** | = Three-phase 350 kcmil mechanical lug Canadian bus |

Receptacle: R1S1 = Receptacle 1, Side 1
R2S1 = Receptacle 2, Side 1
R3S1 = Receptacle 3, Side 1
R1S2 = Receptacle 1, Side 2
R2S2 = Receptacle 2, Side 2
R3S2 = Receptacle 3, Side 2

***Notes***

① Number represents the quantity of 1/4-turn ball valves with 3/4-inch hose bibs.

Internet option also available. Contact factory for details.

**Accessories**

See **Page V1-T5-75**.

**Dimensions**

Approximate Dimensions in Inches (mm)

**Powerhouse**

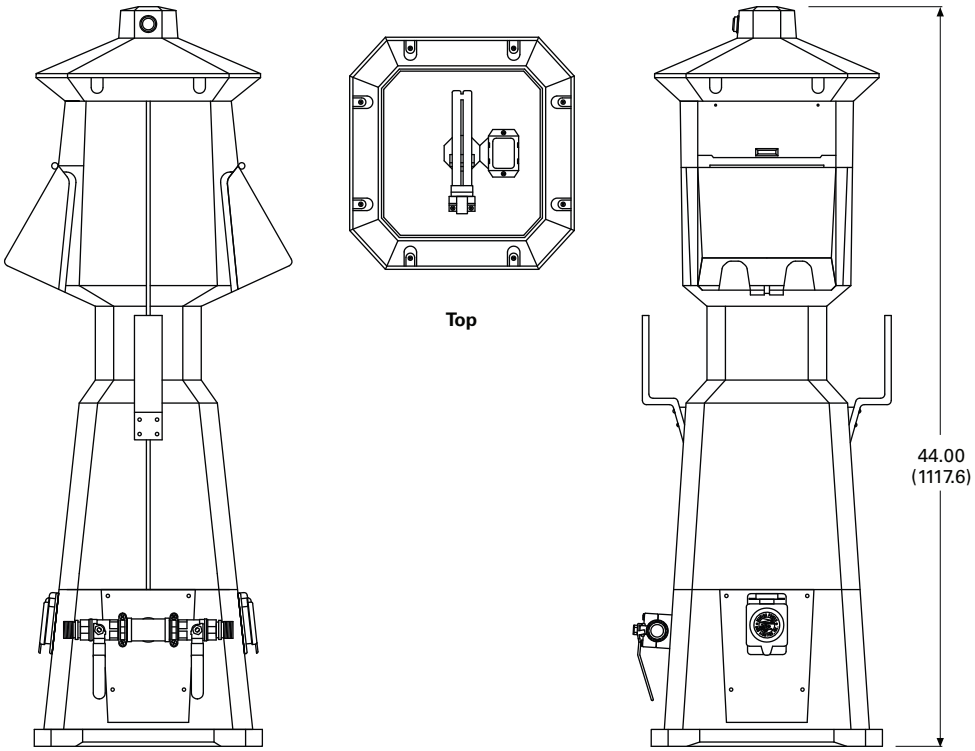


**Side View** **Front View**

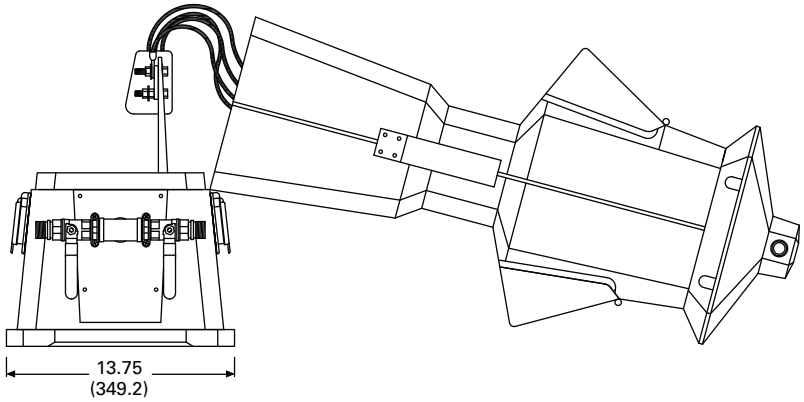


**Broken View**

Powerhouse—Stainless Steel (SS) Power Pedestal

## Contents


| *Description* | *Page* |
|---|---|
| Power Pedestals | **V1-T5-28** |
| Powerhouse Power Pedestal | **V1-T5-30** |
| Powerhouse—Stainless Steel (SS) Power Pedestal | |
| Catalog Number Selection | **V1-T5-34** |
| Accessories | **V1-T5-35** |
| Dimensions | **V1-T5-35** |
| Newport Camp Mate Power Pedestal | **V1-T5-36** |
| Park Light Power Pedestal | **V1-T5-39** |
| Firehouse | **V1-T5-42** |
| Digital Electronic Kilowatthour Meters | **V1-T5-44** |
| Distribution Equipment—Ground Fault Monitor | **V1-T5-45** |
| Distribution Equipment—Substations | **V1-T5-46** |
| Distribution Equipment—Panels | **V1-T5-49** |
| Distribution Equipment—Transformers | **V1-T5-50** |




## Powerhouse—Stainless Steel (SS) Power Pedestal

### Product Description

For long-lasting durability and low maintenance, the new stainless steel Powerhouse–SS pedestal is the most resilient power center offered.

We have designed a stainless steel pedestal that will meet and exceed all applicable codes and withstand harsh inland and coastal environments.

### Features

- Stainless steel housing with a limited lifetime warranty
- Photocell controlled 13 watt fluorescent light with amber lens
- Large removable access panel for easy installation and maintenance
- Weatherproof doors that protect receptacles and breakers
- Backlit faceplate to aid in hooking up at night
- Hose and cable brackets
- Powder-coated finish
- Loop-feed mechanical busbars that can accept up to 350 kcmil wire

### Available Options

- Clear lens
- Photocell controlled single or dual 7 watt or 13 watt fluorescent light
- Telephone (RJ-11) for each side
- Cable TV for each side
- High-speed Internet connection (RJ-45) for each side
- Water–single or dual 1/4-turn brass ball valves (brass "T" connection) with 3/4-inch hose bibs
- Water meters with remote capability
- Water—anti-siphon faucet
- Direct burial stainless steel ground mounting stand
- Lockable doors
- Loop-feed 3/8-inch stud lug copper busbar for up to 350 kcmil wire (recommended for salt water environments)
- Single-feed mechanical busbars for up to 350 kcmil wire
- Digital electronic metering for each side
- Wireless remote reading of electronic kilowatt meters
- Meter socket for each side powered (to accept glass style meter)
- Four door design to add more outlets per pedestal

## Catalog Number Selection

**Z D U 4 7 0 0 0 0 0 0 1 2 K M**

**Type**

| | |
|---|---|
| **P** | = Powerhouse |
| **Z** | = PHSS |

**Lighting and Lens Color**

| | | |
|---|---|---|
| **A** | = 7 W light | Amber |
| **B** | = Dual 7 W light | Amber |
| **C** | = 9 W light | Amber |
| **D** | = 13 W light | Amber |
| **E** | = Dual 13 W light | Amber |
| **F** | = No lighting | Amber |
| **G** | = 7 W light | Clear |
| **H** | = Dual 7 W light | Clear |
| **I** | = 9 W light | Clear |
| **J** | = 13 W light | Clear |
| **K** | = Dual 13 W light | Clear |
| **L** | = No lighting | Clear |
| **M** | = 7 W light | Special |
| **N** | = Dual 7 W light | Special |
| **O** | = 9 W light | Special |
| **P** | = 13 W light | Special |
| **Q** | = Dual 13 W light | Special |
| **R** | = No lighting | Special |
| **S** | = 350 MA LED | Amber |
| **T** | = 700 MA LED | Amber |
| **U** | = 350 MA LED | Clear |
| **V** | = 700 MA LED | Clear |
| **W** | = 350 MA LED | Special |
| **Y** | = 700 MA LED | Special |

**Metering Type**

| | |
|---|---|
| **U** | = Unmetered |
| **D** | = Digital electronic meters (side one) |
| **T** | = Digital electronic meters (side two) |
| **B** | = Digital electronic meters (both sides) |
| **R** | = Receptacles metered individually |
| **M** | = One meter socket (100 A) |
| **N** | = Two meter socket (100 A each) |

**Sides and Receptacles**

| R1S1 | R2S1 | R3S1 | R4S1 | R1S2 | R2S2 | R3S2 | R4S2 |
|---|---|---|---|---|---|---|---|
| 0 | 0 | 0 | 0 | 0 | 0 | 0 | 0 |
| 1 | 1 | 1 | 1 | 1 | 1 | 1 | 1 |
| 2 | 2 | 2 | 2 | 2 | 2 | 2 | 2 |
| 3 | 3 | 3 | 3 | 3 | 3 | 3 | 3 |
| 4 | 4 | 4 | 4 | 4 | 4 | 4 | 4 |
| 5 | 5 | 5 | 5 | 5 | 5 | 5 | 5 |
| 6 | 6 | 6 | 6 | 6 | 6 | 6 | 6 |
| 7 | 7 | 7 | 7 | 7 | 7 | 7 | 7 |
| 8 | 8 | 8 | 8 | 8 | 8 | 8 | 8 |

| | |
|---|---|
| **0** | = None |
| **1** | = 20 A GFI duplex |
| **2** | = 30 A, 125 V |
| **4** | = 50 A, 125/250 V |
| **5** | = 100 A, 208 V |
| **6** | = 100 A, 250 V |
| **7** | = 100 A, 277/480 V |
| **8** | = 100 A, 480 V |

**Water Option** ①

| | |
|---|---|
| **0** | = 0 |
| **1** | = 1 |
| **2** | = 2 |
| **3** | = Single water meter |
| **4** | = Dual water meter |
| **5** | = Single meter, 2 V |
| **6** | = 1 frost free |
| **7** | = 2 frost free |

**Extra Unmetered GFI Receptacles**

| | |
|---|---|
| **0** | = None |
| **1** | = 1 |
| **2** | = 2 |

**Phone Cable TV and Internet Options**

| | Phone Jack | Cable TV Jack | Internet Option |
|---|---|---|---|
| **A** = | 1 | 0 | 0 |
| **B** = | 1 | 0 | 1 |
| **C** = | 1 | 0 | 2 |
| **D** = | 1 | 1 | 0 |
| **E** = | 1 | 1 | 1 |
| **F** = | 1 | 1 | 2 |
| **G** = | 1 | 2 | 0 |
| **H** = | 1 | 2 | 1 |
| **I** = | 1 | 2 | 2 |
| **J** = | 2 | 0 | 0 |
| **K** = | 2 | 0 | 1 |
| **L** = | 2 | 0 | 2 |
| **M** = | 2 | 1 | 0 |
| **N** = | 2 | 1 | 1 |
| **O** = | 2 | 1 | 2 |
| **P** = | 2 | 2 | 0 |
| **Q** = | 2 | 2 | 1 |
| **R** = | 2 | 2 | 2 |
| **S** = | 0 | 2 | 2 |
| **T** = | 0 | 0 | 1 |
| **U** = | 0 | 0 | 2 |
| **V** = | 0 | 1 | 0 |
| **W** = | 0 | 1 | 1 |
| **X** = | 0 | 1 | 2 |
| **Y** = | 0 | 2 | 0 |
| **Z** = | 0 | 2 | 1 |
| **0** = | 0 | 0 | 0 |

**Bus**

| | |
|---|---|
| **S** | = Single-phase 3/8-inch copper busbar |
| **F** | = Three-phase 3/8-inch copper busbar |
| **C** | = Single-phase 3/8-inch Canadian busbar |
| **T** | = Three-phase 3/8-inch Canadian busbar |
| **M** | = Single-phase 300 kcmil mechanical lug bus |
| **Z** | = Three-phase 300 kcmil mechanical lug bus |
| **L** | = Single-phase 350 kcmil mechanical lug bus |
| **P** | = Three-phase 350 kcmil mechanical lug bus |
| **N** | = Single-phase 1/4-inch copper busbar |
| **Q** | = Single-phase 1/4-inch split mechanical busbar |
| **A** | = Single-phase 300 kcmil mechanical lug Canadian bus |
| **B** | = Three-phase 300 kcmil mechanical lug Canadian bus |
| **D** | = Single-phase 350 kcmil mechanical lug Canadian bus |
| **E** | = Three-phase 350 kcmil mechanical lug Canadian bus |

Receptacle: R1S1 = Receptacle 1, Side 1
R2S1 = Receptacle 2, Side 1
R3S1 = Receptacle 3, Side 1
R1S2 = Receptacle 1, Side 2
R2S2 = Receptacle 2, Side 2
R3S2 = Receptacle 3, Side 2

***Notes***

① Number represents the quantity of 1/4-turn ball valves with 3/4-inch hose bibs.

Internet option also available. Contact factory for details.

**Accessories**

See **Page V1-T5-75**.

**Dimensions**

Approximate Dimensions in Inches (mm)

### Powerhouse—Stainless Steel (SS)

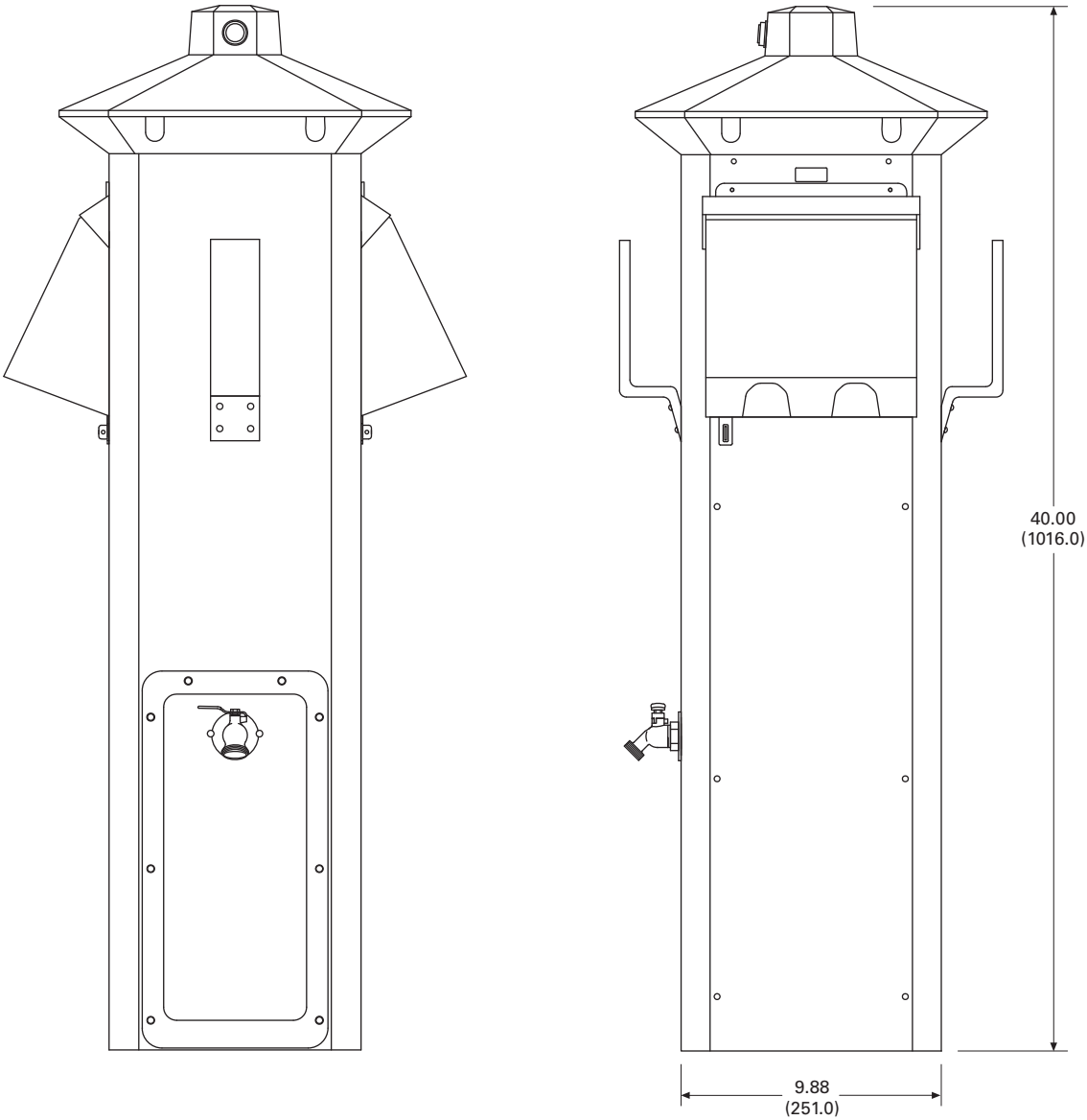

**Newport Camp Mate Power Pedestal**

## Contents


| *Description* | *Page* |
|---|---|
| Power Pedestals | **V1-T5-28** |
| Powerhouse Power Pedestal | **V1-T5-30** |
| Powerhouse—Stainless Steel (SS) Power Pedestal | **V1-T5-33** |
| Newport Camp Mate Power Pedestal | |
| Catalog Number Selection | **V1-T5-37** |
| Accessories | **V1-T5-38** |
| Dimensions | **V1-T5-38** |
| Park Light Power Pedestal | **V1-T5-39** |
| Firehouse | **V1-T5-42** |
| Digital Electronic Kilowatthour Meters | **V1-T5-44** |
| Distribution Equipment—Ground Fault Monitor | **V1-T5-45** |
| Distribution Equipment—Substations | **V1-T5-46** |
| Distribution Equipment—Panels | **V1-T5-49** |
| Distribution Equipment—Transformers | **V1-T5-50** |


## Newport Camp Mate Power Pedestal

### Product Description

The Newport Camp Mate provides many of the features and options of our other full-size pedestals, but in a compact self-contained unit. This model provides more mounting options to RV park owners than any other model. It can be mounted to our stainless steel stand either flanged or direct burial, a post or any wall.

It comes standard with a resin housing that will never rust or deteriorate and provides area lighting as well as aiding in hooking up at night. This unit is especially suitable to many RV park renovation projects as well as new RV parks.

### Features

- Photocell controlled 7 watt fluorescent light with amber lens
- Lockable weatherproof door that protects receptacles and breakers
- Engineered resin housing
- Limited lifetime warranty on the housing
- Designed to mount on a post, wall or an optional custom stand
- Loop-feed 1/4-inch copper stud lug busbars that can accept 2/0 AWG wire for Camp Mate without optional stand
- Loop-feed mechanical busbars that can accept up to 2/0 AWG wire for Camp Mate on optional stand

### Available Options

- 36-inch stainless steel stand
- 40-inch stainless steel pad-mounted stand
- 60-inch direct burial stainless steel stand
- Telephone (RJ-11)
- Cable TV
- High-speed Internet connector (RJ-45)
- Water—single or dual 1/4-turn brass ball valves (brass "T" connection) with 3/4-inch hose bibs mounted on optional stand
- Water—anti-siphon backflow preventer
- Loop feed 3/8-inch stud lug copper busbar for up to 350 kcmil wire with stand (recommended for salt water environments)
- Single-feed mechanical busbars for up to 350 kcmil wire available with stand
- Digital electronic meter
- Wireless remote reading of electronic kilowatt meter
- Meter socket available with aluminum stands (to accept glass style meter)

### Standards and Certifications

The Newport Camp Mate is UL listed and comes with a limited lifetime warranty on the housing.

Listed

## Catalog Number Selection

**C A Y B U 4 3 0 1 1 2 W M**

**Type**

| | |
|---|---|
| **N** | = NP Harbor Mate |
| **C** | = NP Camp Mate |

**Photocell**

| | |
|---|---|
| **Y** | = Yes |
| **N** | = No |

**Lighting and Lens Color**

| | | | |
|---|---|---|---|
| **A** | = | 7 W light | Amber |
| **C** | = | 9 W light | Amber |
| **F** | = | No lighting | Amber |
| **G** | = | 7 W light | Clear |
| **I** | = | 9 W light | Clear |
| **L** | = | No lighting | Clear |
| **M** | = | 7 W light | Special |
| **O** | = | 9 W light | Special |
| **R** | = | No lighting | Special |
| **S** | = | 350 MA LED | Amber |
| **T** | = | 700 MA LED | Amber |
| **U** | = | 350 MA LED | Clear |
| **V** | = | 700 MA LED | Clear |
| **W** | = | 350 MA LED | Special |
| **Y** | = | 700 MA LED | Special |

**Lighting Protection**

| | |
|---|---|
| **B** | = Breaker protected |
| **F** | = Fuse protected |

**Metering Type** ①

| | |
|---|---|
| **U** | = Unmetered |
| **D** | = Digital electronic meters |
| **R** | = Receptacles metered individually |

**Sides and Receptacles**

| R1S1 | R2S1 | R3S1 |
|---|---|---|
| **0** | **0** | **0** |
| **1** | **1** | **1** |
| **2** | **2** | |
| **3** | **3** | |
| **4** | **4** | |

| | |
|---|---|
| **0** | = None |
| **1** | = 20 A GFI duplex |
| **2** | = 30 A, 125 V |
| **3** | = 50 A, 125 V |
| **4** | = 50 A, 125/250 V |

**Stand**

| | |
|---|---|
| **0** | = 0 |
| **1** | = 1 |

**Water Option** ②

| | |
|---|---|
| **0** | = 0 |
| **1** | = 1 |
| **2** | = 2 |

**Hard Wired Breakers**

**S1**

| | |
|---|---|
| **0** | = None |
| **2** | = 20 A, two-pole |
| **3** | = 30 A |

**Bus**

| | |
|---|---|
| **S** | = Single-phase 1/4-inch copper busbar |
| **F** | = Three-phase 1/4-inch copper busbar |
| **C** | = Single-phase 1/4-inch Canadian busbar |
| **M** | = Mechanical lug 2/0 |
| **Q** | = Single-phase 1/4-inch split mechanical busbar (with stand ONLY) |
| **A** | = 1/4-inch Canadian mechanical |

**Phone Cable TV and Internet Options**

| | Phone Jack | Cable TV Jack | Internet Option |
|---|---|---|---|
| **A** = | 1 | 0 | 0 |
| **B** = | 1 | 0 | 1 |
| **C** = | 1 | 0 | 2 |
| **D** = | 1 | 1 | 0 |
| **E** = | 1 | 1 | 1 (Camp Mate only) |
| **T** = | 0 | 0 | 1 |
| **V** = | 0 | 1 | 0 |
| **W** = | 0 | 1 | 1 |
| **0** = | 0 | 0 | 0 |

Receptacle: R1 = Receptacle 1
R2 = Receptacle 2
R3 = Receptacle 3

***Notes***

① 20 A GFIs not metered.

② Number represents the quantity of 1/4-turn ball valves with 3/4-inch hose bibs (with stand only).

**Accessories**

See **Page V1-T5-75**.

**Dimensions**

Approximate Dimensions in Inches (mm)

### Newport Camp Mate

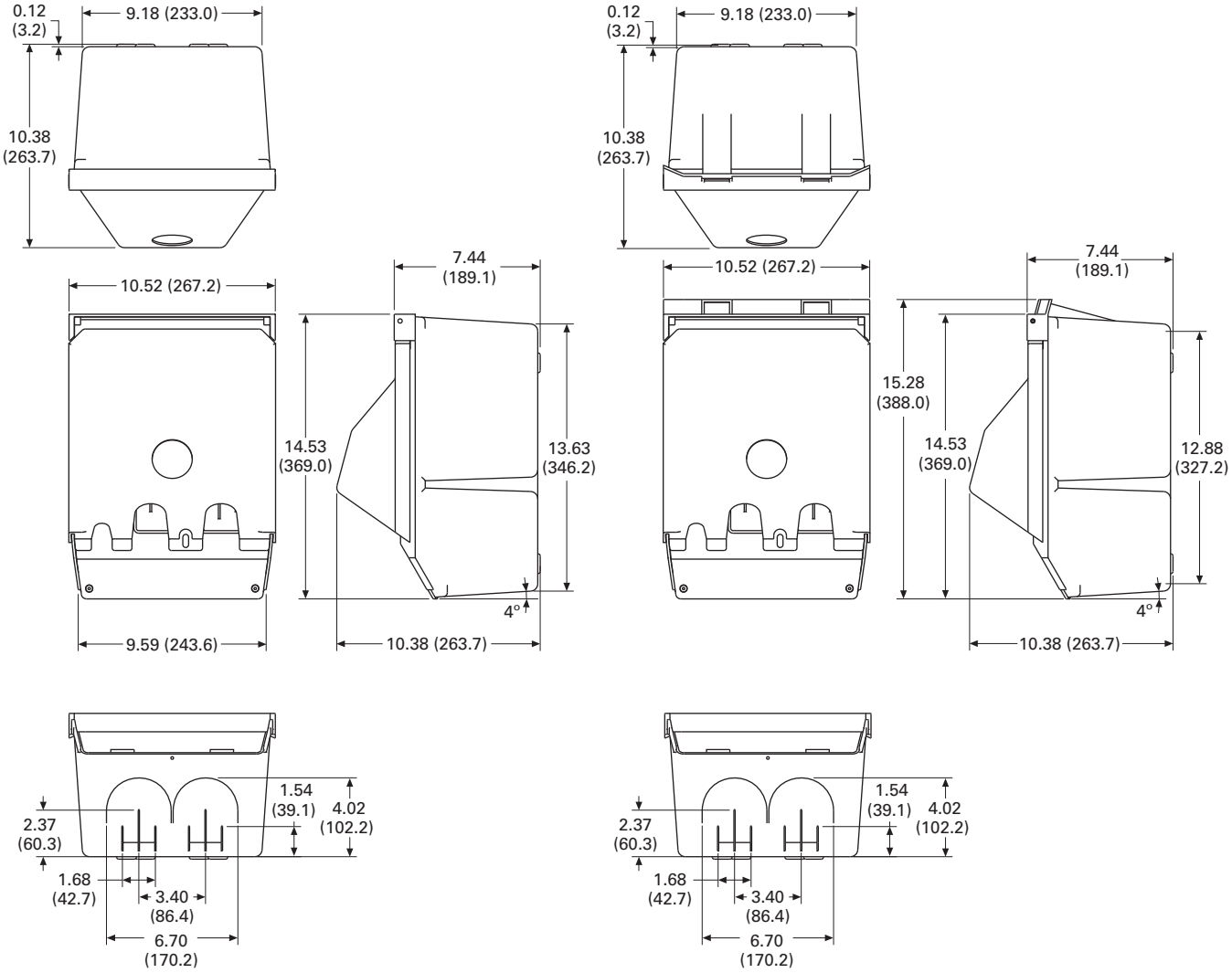


**Newport Redesign**

**Newport Redesign With Meters**

Park Light Power Pedestal

## Contents


| *Description* | *Page* |
|---|---|
| Power Pedestals | **V1-T5-28** |
| Powerhouse Power Pedestal | **V1-T5-30** |
| Powerhouse—Stainless Steel (SS) Power Pedestal | **V1-T5-33** |
| Newport Camp Mate Power Pedestal | **V1-T5-36** |
| Park Light Power Pedestal | |
| Catalog Number Selection | **V1-T5-40** |
| Accessories | **V1-T5-41** |
| Dimensions | **V1-T5-41** |
| Firehouse | **V1-T5-42** |
| Digital Electronic Kilowatthour Meters | **V1-T5-44** |
| Distribution Equipment—Ground Fault Monitor | **V1-T5-45** |
| Distribution Equipment—Substations | **V1-T5-46** |
| Distribution Equipment—Panels | **V1-T5-49** |
| Distribution Equipment—Transformers | **V1-T5-50** |




## Park Light Power Pedestal

### Product Description

The elegant design of the Park Light complements park landscaping and provides essential lighting required for park safety and security for campground paths, walkways, recreational areas and even pools. The Park Light has the same 360 degree lighting design as the Powerhouse and a resin housing that will never rust or deteriorate.

At 10¢/kWH, it will provide area lighting at a cost of less than 50¢/month and the bulbs will last for about three years. The Park Light is a perfect lighting fixture for any campground and especially for RV parks with Powerhouse utility centers.

### Features

- Photocell controlled dual 13 watt fluorescent light with amber lens
- Engineered resin housing with a two-part polyurethane coating for a UV-resistant, long-lasting finish
- Limited lifetime warranty on the housing
- Loop-feed 1/4-inch stud lug copper busbars that can accept 2/0 AWG wire

### Available Options

- Clear lens
- Photocell controlled single or dual 7 watt or 13 watt fluorescent light
- Phone (RJ-11)
- Cable TV
- High-speed Internet (RJ-45)
- Water faucet(s) with 3/4-inch hose bib
- Water—anti-siphon backflow preventer
- Digital electronic meter
- Wireless remote reading of electronic kilowatt meter
- Direct burial ground mounting stand
- Custom paint color

### Standards and Certifications

The housing has a limited lifetime warranty, and the unit is UL listed.

Listed

## Catalog Number Selection

**H D Y B D 4 7 0 1 2 A M**

**Type**

| | |
|---|---|
| **H** | = Hatteras Light |
| **R** | = Park Light |

**Photocell**

| | |
|---|---|
| **Y** | = Yes |
| **N** | = No |

**Lighting Protection**

| | |
|---|---|
| **B** | = Breaker protected |
| **F** | = Fuse protected |

**Metering Type** ①

| | |
|---|---|
| **U** | = Unmetered |
| **D** | = Digital electronic meters |
| **R** | = Receptacles metered individually |

**Lighting and Lens Color**

| | | |
|---|---|---|
| **A** | = 7 W light | Amber |
| **B** | = Dual 7 W light | Amber |
| **C** | = 9 W light | Amber |
| **D** | = 13 W light | Amber |
| **E** | = Dual 13 W light | Amber |
| **F** | = No lighting | Amber |
| **G** | = 7 W light | Clear |
| **H** | = Dual 7 W light | Clear |
| **I** | = 9 W light | Clear |
| **J** | = 13 W light | Clear |
| **K** | = Dual 13 W light | Clear |
| **L** | = No lighting | Clear |
| **M** | = 7 W light | Special |
| **N** | = Dual 7 W light | Special |
| **O** | = 9 W light | Special |
| **P** | = 13 W light | Special |
| **Q** | = Dual 13 W light | Special |
| **R** | = No lighting | Special |
| **S** | = 350 MA LED | Amber |
| **T** | = 700 MA LED | Amber |
| **U** | = 350 MA LED | Clear |
| **V** | = 700 MA LED | Clear |
| **W** | = 350 MA LED | Special |
| **Y** | = 700 MA LED | Special |

**Sides and Receptacles**

| R1S1 | R2S1 | R1S2 |
|---|---|---|
| **0** | **0** | **0** |
| **1** | **1** | **1** |
| **2** | **2** | **2** |
| **3** | **3** | **3** |
| **4** | **4** | **4** |

| | |
|---|---|
| **0** | = None |
| **1** | = 20 A GFI duplex |
| **2** | = 30 A, 125 V |
| **3** | = 50 A, 125 V |
| **4** | = 50 A, 125/250 V |

**Water Option** ②

| | |
|---|---|
| **0** | = 0 |
| **1** | = 1 (1/2-inch) |
| **2** | = 2 (1/2-inch) |
| **3** | = 1 (3/4-inch) |
| **4** | = 2 (3/4-inch) |

**Hard Wired Breakers**

**S1**

| | |
|---|---|
| **0** | = None |
| **2** | = 20 A, two-pole |
| **3** | = 30 A |

**Bus**

| | |
|---|---|
| **S** | = Single-phase 1/4-inch copper busbar |
| **F** | = Three-phase 1/4-inch copper busbar |
| **C** | = Single-phase 1/4-inch Canadian busbar |
| **M** | = Mechanical lug 2/0 |
| **A** | = 1/4-inch Canadian mechanical |

**Phone Cable TV and Internet Options**

| Phone Jack | Cable TV Jack | Internet Option |
|---|---|---|
| **A** = 1 | 0 | 0 |
| **B** = 1 | 0 | 1 |
| **C** = 1 | 0 | 2 |
| **D** = 1 | 1 | 0 |
| **E** = 1 | 1 | 1 |
| **F** = 1 | 1 | 2 |
| **G** = 1 | 2 | 0 |
| **H** = 1 | 2 | 1 |
| **I** = 1 | 2 | 2 |
| **J** = 2 | 0 | 0 |
| **M** = 2 | 1 | 0 |
| **P** = 2 | 2 | 0 |
| **S** = 0 | 2 | 2 |
| **T** = 0 | 0 | 1 |
| **U** = 0 | 0 | 2 |
| **V** = 0 | 1 | 0 |
| **W** = 0 | 1 | 1 |
| **X** = 0 | 1 | 2 |
| **Y** = 0 | 2 | 0 |
| **Z** = 0 | 2 | 1 |

Receptacle: R1 = Receptacle 1, Side 1
R2 = Receptacle 2, Side 2

***Notes***

① 20 A GFIs not metered.

② Number represents the quantity of 1/4-turn ball valves with 3/4-inch hose bibs (with stand only).

**Accessories**

See **Page V1-T5-75**.

**Dimensions**

Approximate Dimensions in Inches (mm)

### Park Light

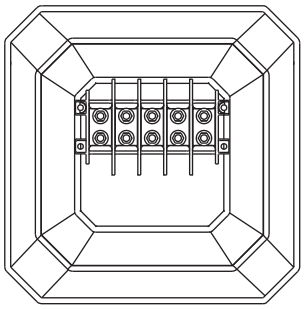

**Busbar Access Top Removed**

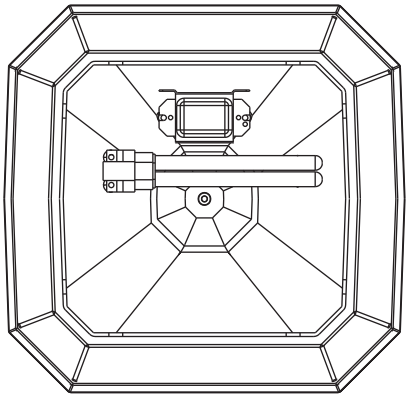

**Inside Top**

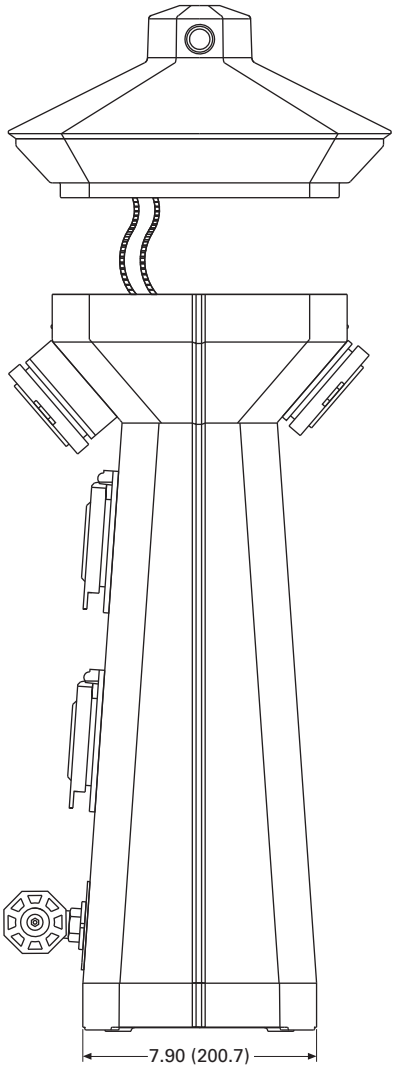


**Side View**

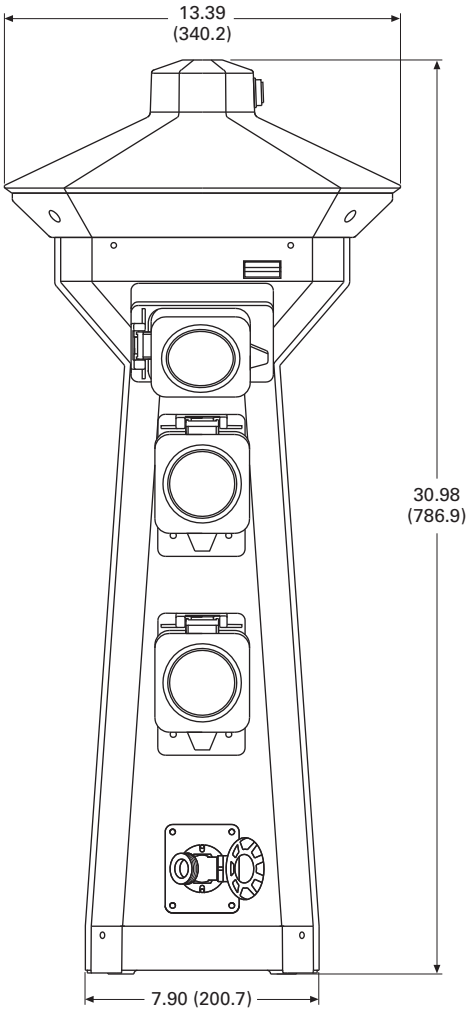


**Front View**

Firehouse

## Contents


| *Description* | *Page* |
|---|---|
| Power Pedestals | **V1-T5-28** |
| Powerhouse Power Pedestal | **V1-T5-30** |
| Powerhouse—Stainless Steel (SS) Power Pedestal | **V1-T5-33** |
| Newport Camp Mate Power Pedestal | **V1-T5-36** |
| Park Light Power Pedestal | **V1-T5-39** |
| Firehouse | |
| Accessories | **V1-T5-43** |
| Dimensions | **V1-T5-43** |
| Digital Electronic Kilowatthour Meters | **V1-T5-44** |
| Distribution Equipment—Ground Fault Monitor | **V1-T5-45** |
| Distribution Equipment—Substations | **V1-T5-46** |
| Distribution Equipment—Panels | **V1-T5-49** |
| Distribution Equipment—Transformers | **V1-T5-50** |




## Firehouse

### Product Description

The Firehouse is designed to provide added fire safety to RV parks and campgrounds. The Firehouse provides a convenient location and easy access to fire extinguishers and to an optional life ring when installed around pools and waterfront amenities.

In addition, the Firehouse provides area lighting for easy identification during an emergency and for security lighting around the unit. The Firehouse can be equipped with an alarm strobe light and siren, which are automatically activated when the fire extinguisher cabinet door is opened or the optional life ring is removed.

### Features

- Photocell controlled 13 watt fluorescent light
- Amber lens for bug reduction
- 10 lb ABC Type fire extinguisher
- Stainless steel housing with oven-baked enamel finish with an engineered resin base and top
- Limited lifetime warranty on the housing

### Available Options

- Alarm strobe light and siren
- Optional 24-inch white or orange life ring for poolside or dockside installations
- 20 lb ABC Type fire extinguisher

### Catalog Number Selection

**F A Y A E N**

**Type**
**F** = Firehouse

**Photocell**
**Y** = Yes
**N** = No

**Alarm/Strobe**
**A** = Include alarm/strobe
**N** = No alarm/strobe

**Fire Extinguisher**
**E** = Include 10 lb extinguisher
**N** = No extinguisher
**X** = Include 20 lb extinguisher

**24-Inch Life Ring**
**R** = Include life ring
**N** = No life ring

**Lighting and Lens Color**

| | | | | | |
|---|---|---|---|---|---|
| **A** = 7 W light | Amber | **I** = 9 W light | Clear | **Q** = Dual 13 W light | Special |
| **B** = Dual 7 W light | Amber | **J** = 13 W light | Clear | **R** = No lighting | Special |
| **C** = 9 W light | Amber | **K** = Dual 13 W light | Clear | **S** = 350 MA LED | Amber |
| **D** = 13 W light | Amber | **L** = No lighting | Clear | **T** = 700 MA LED | Amber |
| **E** = Dual 13 W light | Amber | **M** = 7 W light | Special | **U** = 350 MA LED | Clear |
| **F** = No lighting | Amber | **N** = Dual 7 W light | Special | **V** = 700 MA LED | Clear |
| **G** = 7 W light | Clear | **O** = 9 W light | Special | **W** = 350 MA LED | Special |
| **H** = Dual 7 W light | Clear | **P** = 13 W light | Special | **Y** = 700 MA LED | Special |

**Accessories**

See **Page V1-T5-75**.

**Dimensions**

Approximate Dimensions in Inches (mm)

**Firehouse–SS**

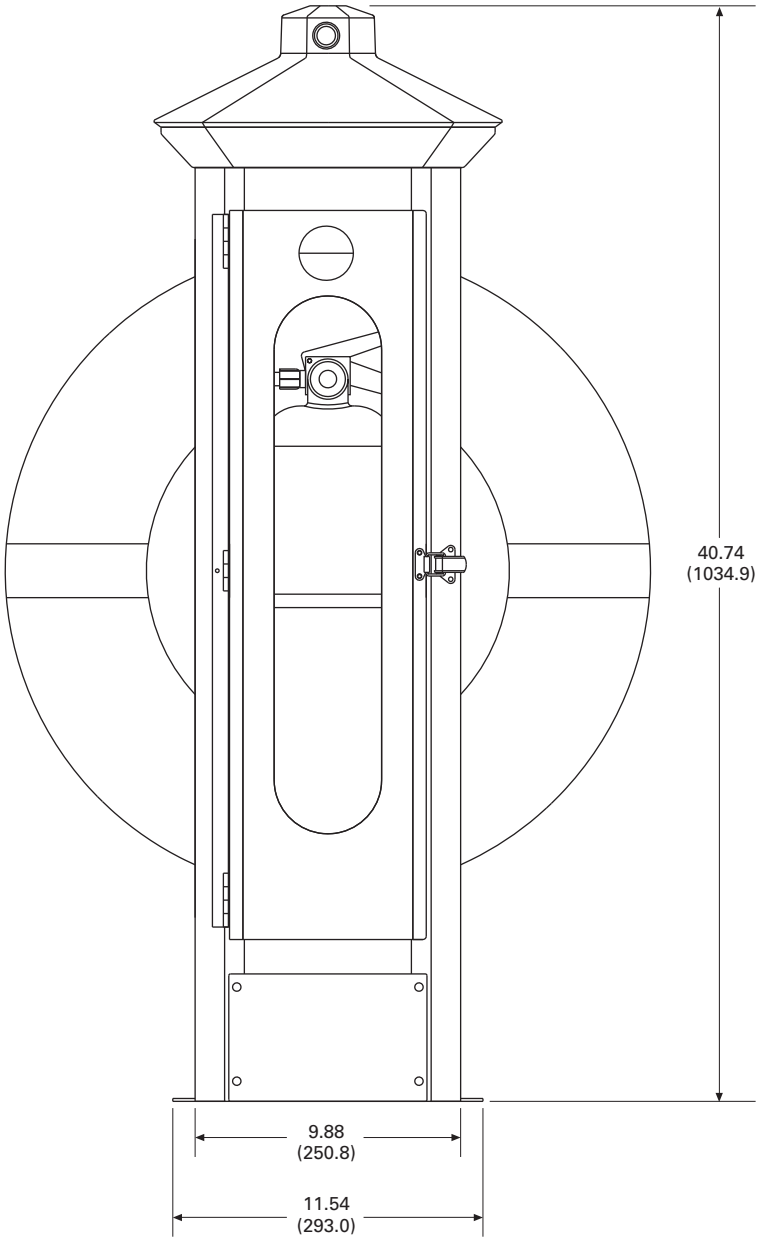

Digital Electronic Kilowatthour Meters

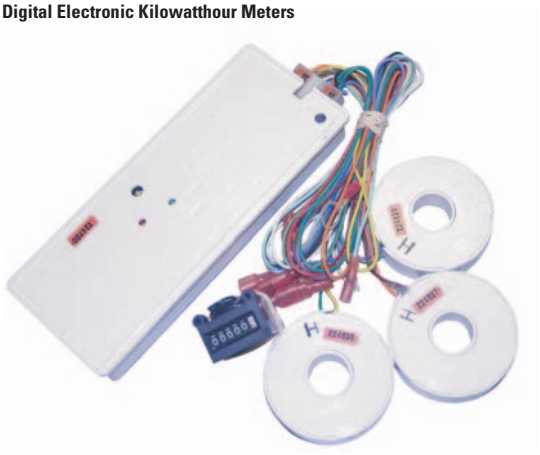

## Contents


| *Description* | *Page* |
|---|---|
| Power Pedestals | **V1-T5-28** |
| Powerhouse Power Pedestal | **V1-T5-30** |
| Powerhouse—Stainless Steel (SS) Power Pedestal | **V1-T5-33** |
| Newport Camp Mate Power Pedestal | **V1-T5-36** |
| Park Light Power Pedestal | **V1-T5-39** |
| Firehouse | **V1-T5-42** |
| Digital Electronic Kilowatthour Meters | |
| Distribution Equipment—Ground Fault Monitor | **V1-T5-45** |
| Distribution Equipment—Substations | **V1-T5-46** |
| Distribution Equipment—Panels | **V1-T5-49** |
| Distribution Equipment—Transformers | **V1-T5-50** |


## Digital Electronic Kilowatthour Meters

### Product Description

Using the latest surface mount technology, Eaton manufactures a digital electronic kilowatt hour meter that exceeds the +/– 2% accuracy required by ANSI (American National Standards Institute) C-12.1 and is approved by the state of California at +/– 1% over the full range of 0–100 A from a 0.5 to 1 power factor and is available for both single- and three-phase applications.

The meter drives an electro-mechanical counter that requires a 12 V pulse each tenth of a kilowatthour, providing 10 pulses per kilowatt used. The meter output can be hard wired or connected to a transmitter in the pedestal for wireless transmission to a receiver displaying the output on a PC for direct billing of up to 1,000 individual customers.

### Features

Our meter is designed to be user friendly in that all connections from external sources and the meter output are through one 14-pin locking connector. This feature eliminates many common problems, such as reverse line polarity and improper coil polarity. Simple LEDs, both red and green, indicate line and load condition and the pulsed LED indicates the rate of power consumption.

#### *Wireless System*

All of our meters are "wireless capable" to allow for wireless meter reading. This technology enables the marina or RV park to get meter readings from one central location rather than visiting every site to read the counters.

#### *Meter Socket Capabilities*

Meter sockets are available on the Powerhouse and Powerhouse–SS.

#### *Standard:*

- Four jaw
- Ring-type
- 100 A

### Available Options

- 200 A (SS only)
- Lockable hasp
- Ringless (SS only)
- Five jaw
- Seven jaw (SS only)

### Product Selection

*One Element Meter*

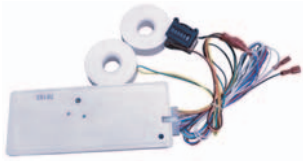

*Two Element Meter*

*Three Element Meter*

Ground Fault Monitor

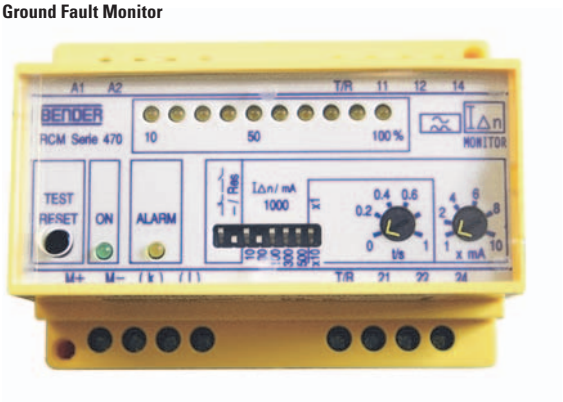


## Contents


| *Description* | *Page* |
|---|---|
| Power Pedestals | **V1-T5-28** |
| Powerhouse Power Pedestal | **V1-T5-30** |
| Powerhouse—Stainless Steel (SS) Power Pedestal | **V1-T5-33** |
| Newport Camp Mate Power Pedestal | **V1-T5-36** |
| Park Light Power Pedestal | **V1-T5-39** |
| Firehouse | **V1-T5-42** |
| Digital Electronic Kilowatthour Meters | **V1-T5-44** |
| Distribution Equipment—Ground Fault Monitor | |
| Distribution Equipment—Substations | **V1-T5-46** |
| Distribution Equipment—Panels | **V1-T5-49** |
| Distribution Equipment—Transformers | **V1-T5-50** |




## Distribution Equipment—Ground Fault Monitor

### Product Description

New to our product offering are ground fault monitoring systems designed to detect fault currents in the AC shore power system that are too low to trip a circuit breaker. The Ground Fault Monitor helps reduce the risk of injury or property damage, which may result from stray fault currents. Our ground fault monitoring system provides information to the maintenance staff on the overall condition of the AC electrical system. The ground fault monitoring system operates 24 hours a day and can be monitored by non-technical personnel.

### Features

- UL listed current transformers
- Adjustable trip level 10 mA to 10 A
- Current transformers up to 8 1/4-inch diameter
- Visual and/or audible alarm
- Housing of fiberglass or powder coated stainless steel available

***Power Guard***

The ground fault monitor detects ground fault currents by means of current transformers (CT), which are placed around main or branch circuits. If a ground fault occurs, the CT will detect the amount of fault current and send a signal to the ground fault monitoring device where the amount of fault current is displayed with the faulty circuit identified. The detected fault can either activate an indicator alarm or disconnect the faulted circuit.

**Substations**

***Side-by-Side Substation***

## Contents


| *Description* | *Page* |
|---|---|
| Power Pedestals | **V1-T5-28** |
| Powerhouse Power Pedestal | **V1-T5-30** |
| Powerhouse—Stainless Steel (SS) Power Pedestal | **V1-T5-33** |
| Newport Camp Mate Power Pedestal | **V1-T5-36** |
| Park Light Power Pedestal | **V1-T5-39** |
| Firehouse | **V1-T5-42** |
| Digital Electronic Kilowatthour Meters | **V1-T5-44** |
| Distribution Equipment—Ground Fault Monitor | **V1-T5-45** |
| Distribution Equipment—Substations | |
| Features, Benefits and Functions | **V1-T5-47** |
| Available Options | **V1-T5-48** |
| Standards and Certifications | **V1-T5-48** |
| Dimensions | **V1-T5-48** |
| Distribution Equipment—Panels | **V1-T5-49** |
| Distribution Equipment—Transformers | **V1-T5-50** |


## Distribution Equipment—Substations

### Product Description

The introduction of substations into the marina and recreational vehicle market allows Eaton to be your complete marina and RV park electrical products supplier. We are able to assist in the design and layout of your marina or RV park electrical system from the primary service provider to your power pedestal. Our substations are designed for any coastal or inland environment and are constructed of powder-coated stainless steel NEMA 3R housing cabinets. All substation cabinets come with our limited lifetime warranty. All of our substations use Eaton's panels and circuit breakers, providing our customers the utmost in circuit protection and quality.

### Application Description

The aluminum and Galvaneal cabinets are recommended for inland applications. The substations can be configured with 50 to 330 kVA single-phase or three-phase copper wound transformers and up to 20 single-phase or 12 three-phase branch breakers. An optional three-sided double-wall cabinet is available that provides air flow between the panels. All substations come standard with temperature-controlled cooling fans.

### Product Selection Guide

#### Panel and Transformer Combinations

| Panel | Transformer |
|---|---|
| **Single-Phase** | |
| 200 A | 50 kVA |
| 300 A | 75 kVA |
| 400 A | 100 kVA |
| 600 A | 150 kVA |
| 700 A | 167.5 kVA |
| 800 A | 200 kVA |
| 1000 A | 250 kVA |
| 1200 A | 330 kVA |
| **Three-Phase** | |
| 100 A | 45 kVA |
| 200 A | 75 kVA |
| 300 A | 112.5 kVA |
| 400 A | 150 kVA |
| 600 A | 225 kVA |
| 800 A | 300 kVA |

## Features, Benefits and Functions

- Limited lifetime warranty on the housing
- All stainless steel hardware
- Temperature controlled cooling fans in the transformer and circuit breaker compartments
- Lockable door

### *Ventilation*

The substation ventilation is designed to optimize air circulation over and around the transformers and through the panel compartment so that the substation operates at lower temperatures.

Substations come equipped with temperature-controlled cooling fans for exhausting hot air from the cabinet and solar shield.

In addition, substations are available with a double-walled cabinet and solar shield, which allow for cooling of both the exterior surface of the cabinet and the internal components.

## Substations

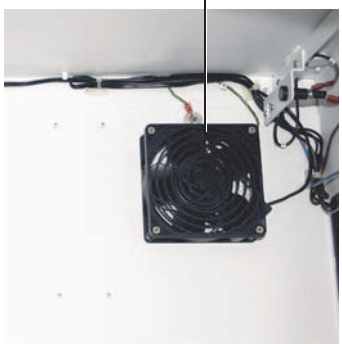


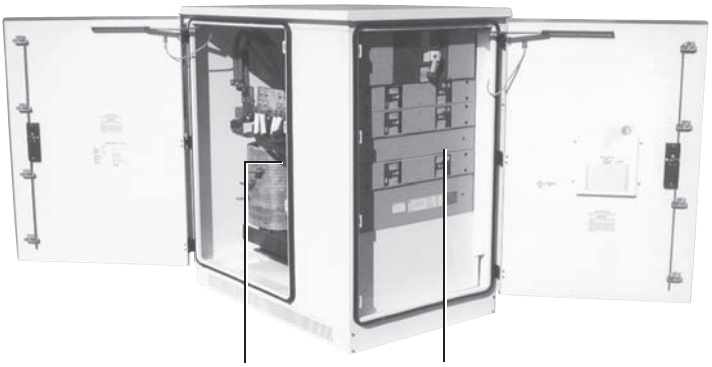


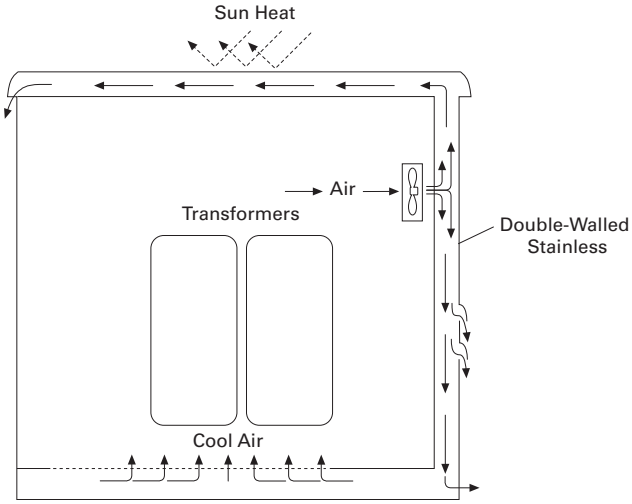


Double-Walled Construction

## Available Options

- Powder-coated cabinets made of stainless steel or fiberglass
- Limited lifetime warranty on housing. Transformer and secondary distribution panel in a single enclosure have a one-year limited warranty
- Stainless steel housing and hardware with locking doors
- Single-phase and three-phase models
- Overload capacity meets ANSI L57.96–01.250
- Optional double-walled construction
- Temperature-controlled fans for cooling
- Custom-made copper wound single-phase or three-phase transformers from 50 to 330 kVA
- Up to 1200 A main circuit breaker with 15 single-phase branch circuit breakers or 10 three-phase branch circuit breakers
- Substations can be equipped with photocells to turn on and off lights
- A 20 A GFI can be installed in the cabinet, as well as a ground fault monitoring system

## Standards and Certifications

- cULus listed

c UL us
Listed

## Dimensions

Approximate Dimensions in Inches (mm)

**Substations**

| | |
|---|---|
| **Standard Substation** | |
| Height | 53.00 (1346.2) |
| Width | 51.00 (1295.4) |
| Depth | 33.00 (838.2) |
| **Side-by-Side Substation** | |
| Height | 53.00 (1346.2) |
| Width | 66.00 (1676.4) |
| Depth | 30.00 (762.0) |
| **Double Panel Substation** | |
| Height | 53.00 (1346.2) |
| Width | 63.00 (1600.2) |
| Depth | 33.00 (838.2) |

Panels

## Contents


| *Description* | *Page* |
|---|---|
| Power Pedestals | **V1-T5-28** |
| Powerhouse Power Pedestal | **V1-T5-30** |
| Powerhouse—Stainless Steel (SS) Power Pedestal | **V1-T5-33** |
| Newport Camp Mate Power Pedestal | **V1-T5-36** |
| Park Light Power Pedestal | **V1-T5-39** |
| Firehouse | **V1-T5-42** |
| Digital Electronic Kilowatthour Meters | **V1-T5-44** |
| Distribution Equipment—Ground Fault Monitor | **V1-T5-45** |
| Distribution Equipment—Substations | **V1-T5-46** |
| Distribution Equipment—Panels | |
| Distribution Equipment—Transformers | **V1-T5-50** |




## Distribution Equipment—Panels

### Product Description

We now can offer our customers Eaton's PRL-3A and PRL-4 panels as stand-alone units or in one of our substations. All of our busses are made of copper and are load rated, breakers are bolt-on type. Distribution panels can be single-phase or three-phase based on your system requirements. Distribution panels can also have a main breaker or a main lug. Branch circuit breakers are provided based on customer requirements.

### Features

- All internal wiring is fine stranded 2000 V insulated copper
- Copper busbars
- All exterior hardware is stainless steel

### Available Options

- NEMA 3R or 4X
- Powder-coated stainless steel
- Main breaker up to 1200 A
- Branch breaker 20 to 1200 A
- Main lug only
- We also offer 480 V models—single-phase and three-phase

***Single-Phase***

- Up to 1200 A main circuit breakers
- Up to 42 branch circuit breakers

***Three-Phase***

- Up to 1200 A main circuit breakers
- Up to 42 branch circuit breakers

### Standards and Certifications

- UL listed
- cULus listed

Listed

Transformers

## Contents


| *Description* | *Page* |
|---|---|
| Power Pedestals | **V1-T5-28** |
| Product Selection Guide | **V1-T5-29** |
| Powerhouse Power Pedestal | **V1-T5-30** |
| Powerhouse—Stainless Steel (SS) Power Pedestal | **V1-T5-33** |
| Newport Camp Mate Power Pedestal | **V1-T5-36** |
| Park Light Power Pedestal | **V1-T5-39** |
| Firehouse | **V1-T5-42** |
| Digital Electronic Kilowatthour Meters | **V1-T5-44** |
| Distribution Equipment—Ground Fault Monitor | **V1-T5-45** |
| Distribution Equipment—Substations | **V1-T5-46** |
| Distribution Equipment—Panels | **V1-T5-49** |
| Distribution Equipment—Transformers | |


## Distribution Equipment—Transformers

### Product Description

Because of the high humidity and corrosive conditions of coastal environments, our transformers are wound with Class H heavily insulated copper bar and are double dipped in tough insulating varnish that protects the copper, as well as reduces the hum that is typical in a transformer that is not double dipped. For marine applications, we provide a third overcoat of high temperature epoxy to protect against the severe saltwater environment. We can provide this transformer in single-phase, from 50 to 500 kVA, and three-phase, from 45 to 300 kVA.

### Features

- Copper wound transformer coils double dipped in high temperature baking varnish
- Copper terminations
- Marine transformers with epoxy overcoat
- All copper-to-copper connections

### Available Options

- Single-phase: 50–500 kVA
- Three-phase: 45–300 kVA
- Epoxy overcoat for non-marine applications

***Primary Voltages***

- 480 wye three-phase
- 480 V three-phase delta three-wire + ground
- 480 V single-phase two-wire + ground

***Secondary Voltages***

- 127/220 V three-phase wye four-wire
- 120/208 V three-phase wye four-wire
- 120/240 V single-phase three-wire

***Marina Power Distribution Transformer kVA Availabilities***

- Single-phase: 50, 75, 100, 150, 167.5, 200, 250, 330, 500 kVA
- Three-phase: 45, 75, 112.5, 150, 225, 300 kVA

### Standards and Certifications

- cULus listed

c UL us Listed

**Marina Power and Lighting Equipment**

***High-Quality, Weatherproof Electrical Equipment***

## Contents


| *Description* | *Page* |
|---|---|
| Power Pedestals | |
| Product Selection Guide | **V1-T5-52** |
| Lighthouse | **V1-T5-54** |
| Lighthouse–SS | **V1-T5-58** |
| Admiral–SS | **V1-T5-62** |
| Newport Harbor Mate | **V1-T5-65** |
| Hatteras Light | **V1-T5-69** |
| Firehouse | **V1-T5-73** |
| Smart Start | **V1-T5-79** |
| Mariner | **V1-T5-80** |
| Digital Electronic Kilowatthour Meters | **V1-T5-81** |
| Distribution Equipment—Ground Fault Monitor | **V1-T5-82** |
| Distribution Equipment—Mega Yacht Powerpoint | **V1-T5-83** |
| Distribution Equipment—Substations | **V1-T5-86** |
| Distribution Equipment—Panels | **V1-T5-89** |
| Distribution Equipment—Transformers | **V1-T5-90** |


Learn Online



## Power Pedestals

### Product Overview

Known as a leader in electrical control, power distribution, and industrial automation products and services, Eaton is a quality driven company that constantly looks for ways to provide enhanced product and service solutions for their customers. Eaton will be able to provide Marina developers a complete electrical solution. For more information on the other products available from Eaton, visit us online at www.eaton.com or www.marinapower.com.

***What Eaton has to Offer***

- Eaton has more marina power outlets in service than all other suppliers combined
- We offer complementary comprehensive in-house electrical designs for your complete marina development using all high quality Eaton products
- We can provide your marina development with complete remote wireless digital electronic meter reading
- Not only can Eaton provide your marina with the highest quality power pedestals and marine distribution equipment, we can also supply your entire electrical needs for your surrounding development and beyond from safety switches to loadcenters and much more

## Product Selection Guide

### Power Pedestal Quick Guide

| | Lighthouse | Lighthouse–SS | Hatteras Light | Newport Harbor Mate | Admiral–SS | Firehouse | Mariner | Lookout | Power Point |
|---|---|---|---|---|---|---|---|---|---|
| Main housing | Engineered resin | Stainless steel | Engineered resin | Engineered resin | Stainless steel | Stainless steel | Engineered resin | Stainless steel | Stainless steel |
| Top | Engineered resin | Engineered resin | Engineered resin | Engineered resin | Stainless steel | Engineered resin | Engineered resin | Stainless steel | Stainless steel |
| Optional stand | — | — | — | Stainless steel | — | — | PVC | — | — |
| External hardware | Stainless steel | Stainless steel | Stainless steel | Stainless steel | Stainless steel | Stainless steel | Stainless steel | Stainless steel | Stainless steel |
| Standard lightwattage(s) | 13 W | 13 W | 13 W | 7 W | 13 W | 13 W | 5 W, 7 W & 13 W | — | 13 W |
| LED lighting option | Yes | Yes | Yes | No | Yes | Yes | No | No | Yes |
| Photocell | Yes | Yes | Yes | Yes | Yes | Yes | No | No | Yes |
| Lockable doors | Yes | Yes | Yes | Yes | Yes | — | — | — | Yes |
| Hose hangers | Yes | Yes | No | No | Yes | No | No | No | No |
| Electric meters | Yes—up to 4 | Yes—up to 4 | Yes—up to 2 | Yes—up to 2 | Yes—up to 4 | No | No | No | Yes—up to 6 |
| Remote meter reading | Yes | Yes | Yes | Yes | Yes | No | No | No | Yes |
| Water | Two 3/4″ | Two 3/4″ | Two 1/2″ | Two 3/4″ | Two 3/4″ | None | None | None | One 3/4″ or more |
| Water meters | Yes | Yes | No | Yes | Yes | No | No | No | Yes |
| Telephone | Yes | Yes | Yes | Yes | Yes | No | No | No | Yes |
| Cable TV | Yes | Yes | Yes | Yes | Yes | No | No | No | Yes |
| Internet | Yes | Yes | Yes | Yes | Yes | No | No | No | Yes |
| Fire extinguisher | No | No | No | No | No | Yes—up to 20 lbs | No | No | No |
| Life ring | No | No | No | No | No | Yes—24″ | No | No | No |
| Alarm and strobe light | No | No | No | No | No | Yes | No | No | No |
| 20 A 110 V GFI | Yes | Yes | Yes | Yes | Yes | No | No | No | Yes |
| 30 A 125 V twist—lock | Yes | Yes | Yes | Yes | Yes | No | No | No | Yes |
| 50 A 125/250 V twist—lock | Yes | Yes | Yes | Yes | Yes | No | No | No | Yes |
| 100 A 120/240 V pin and sleeve | Yes | Yes | No | No | Yes | No | No | No | Yes |
| 100 A 120/208 V pin and sleeve | Yes | Yes | No | No | Yes | No | No | No | Yes |
| 100 A 277/480 V pin and sleeve | Yes | Yes | No | No | Yes | No | No | No | Yes |
| 100 A 480 V pin and sleeve | Yes | Yes | No | No | Yes | No | No | No | Yes |
| 200 A 480 V pin and sleeve | No | No | No | No | Yes | No | No | No | Yes |
| Hardwire compatible | No | No | No | No | No | No | No | No | Yes |
| TVSS compatible | Yes | Yes | No | No | Yes | No | No | No | Yes |
| Card swipe compatible | Yes | Yes | No | Yes | Yes | No | No | No | Yes |
| Security camera compatible | No | No | No | No | No | No | No | Yes | No |
| Busbar rating | Up to 500 A | Up to 500 A | Up to 140 A | Up to 140 A | Up to 500 A | — | — | — | Up to 800 A |
| Maximum wire size—single feed | 350 kcmil | 350 kcmil | #2/0 | #2/0 | 350 kcmil | — | — | — | (3) 500 kcmil |
| Maximum wire size—loop feed | #4/0 | #4/0 | #1 | #1 | 350 kcmil | — | — | — | (3) 500 kcmil |
| Height | 44″ | 40″ | 30″ | 36″ | 48″ | 43.5″ | 24″ to 72″ | 72″ to 96″ | 50″ |
| Width | 13.75″ | 9.875″ | 7.5″ | 10.5″ | 14″ | 9.875″ | 7″ | 9″ | 50″ |
| Depth | 13.75″ | 9.875″ | 7.5″ | 14.5″ | 14″ | 9.875″ | 7″ | 9″ | 36″ |
| **Warranty** | | | | | | | | | |
| Housing | Limited lifetime | Limited lifetime | Limited lifetime | Limited lifetime | Limited lifetime | Limited lifetime | Limited lifetime | Limited lifetime | Limited lifetime |
| Receptacles and breakers | 2 years | 2 years | 2 years | 2 years | 2 years | — | — | — | 2 years |
| Lighting assembly | 1 year | 1 year | 1 year | 1 year | 1 year | 1 year | 1 year | — | 1 year |

## Receptacles

| Side One | | Side Two | |
|---|---|---|---|
| None | None | None | None |
| 30 A | None | None | None |
| 30 A | 30 A | None | None |
| 30 A | None | 30 A | None |
| 30 A | 30 A | 30 A | 30 A |
| 30 A | 50 A | None | None |
| 30 A | None | 50 A | None |
| 30 A | 50 A | 30 A | 50 A |
| 50 A | None | None | None |
| 50 A | 50 A | None | None |
| 50 A | None | 50 A | None |
| 50 A | 50 A | 50 A | 50 A |
| 100 A 120/240 V | None | None | None |
| 100 A 120/240 V | None | 50–50 A | None |
| 100 A 120/240 V | None | 100 A 120/240 V | None |
| 100 A 120/240 V | 50–50 A | 100 A 120/240 V | 50–50 A |
| 100 A 120/208 V | None | None | None |
| 100 A 120/208 V | None | 100 A 120/240 V | None |
| 100 A 120/240 V | 100 A 120/240 V | 100 A 120/240 V | 100 A 120/240 V |
| 100 A 120/208 V | 100 A 120/208 V | 100 A 120/208 V | 100 A 120/208 V |
| 100 A 120/240 V | 100 A 120/240 V | 100 A 120/208 V | 100 A 120/208 V |

## Receptacle Configuration Availability

| Lighthouse | Lighthouse–SS | Admiral–SS | Hatteras Light | Newport Harbor Mate |
|---|---|---|---|---|
| **Receptacle Available with GFI Receptacles** | | | | |
| Yes | Yes | Yes | Yes | Yes |
| Yes | Yes | Yes | Yes | Yes |
| Yes | Yes | Yes | No | Yes |
| Yes | Yes | Yes | Yes | No |
| Yes | Yes | Yes | No | No |
| Yes | Yes | Yes | No | Yes |
| Yes | Yes | Yes | Yes ① | No |
| Yes | Yes | Yes | No | No |
| Yes | Yes | Yes | Yes | Yes |
| Yes | Yes | Yes | No | Yes |
| Yes | Yes | Yes | No | No |
| Yes | Yes | Yes | No | No |
| Yes | Yes | Yes | No | No |
| Yes | Yes | Yes | No | No |
| Yes | Yes | Yes | No | No |
| No | No | Yes | No | No |
| Yes | Yes | Yes | No | No |
| Yes | Yes | Yes | No | No |
| No | No | Yes | No | No |
| No | No | Yes | No | No |
| No | No | Yes | No | No |

***Note***

① Configuration available with no additional GFI receptacles.

Lighthouse

## Contents


| *Description* | *Page* |
|---|---|
| Power Pedestals | **V1-T5-51** |
| Lighthouse | |
| Available Options | **V1-T5-55** |
| Catalog Number Selection | **V1-T5-56** |
| Accessories | **V1-T5-57** |
| Dimensions | **V1-T5-57** |
| Lighthouse–SS | **V1-T5-58** |
| Admiral–SS | **V1-T5-62** |
| Newport Harbor Mate | **V1-T5-65** |
| Hatteras Light | **V1-T5-69** |
| Firehouse | **V1-T5-73** |
| Smart Start | **V1-T5-79** |
| Mariner | **V1-T5-80** |
| Digital Electronic Kilowatthour Meters | **V1-T5-81** |
| Distribution Equipment—Ground Fault Monitor | **V1-T5-82** |
| Distribution Equipment—Mega Yacht Powerpoint | **V1-T5-83** |
| Distribution Equipment—Substations | **V1-T5-86** |
| Distribution Equipment—Panels | **V1-T5-89** |
| Distribution Equipment—Transformers | **V1-T5-90** |


## Lighthouse

### Product Description

One of our most popular units, the all-purpose Lighthouse® pedestal has a wide range of features. With units in service around the world, this stylish power pedestal is recognized for its practicality and exceptional durability.

Engineered to withstand the most severe weather conditions, Lighthouse power pedestals can be found in marinas from Alaska to the tropics.

**Note:** Custom paint color.

**Note:** Wireless remote reading of electronic kilowatt meters.

**Note:** Clear lens.

### Features, Benefits and Functions

- Photocell controlled 13 watt fluorescent light (clear lens or amber lens for bug reduction)
- Lockable weatherproof doors that protect breakers and receptacles while in use (a requirement of NFPA 303 and NEC Article 555)
- Hose and cable brackets
- Heavy resin housing with a two-part polyurethane coating for a UV-resistant, long-lasting finish
- Copper busbar with ratings from 250 to 500 A
- New "hingeless" base providing easy access for both installation and maintenance
- Backlit faceplate for easy receptacle plug-in at night

## Lighthouse

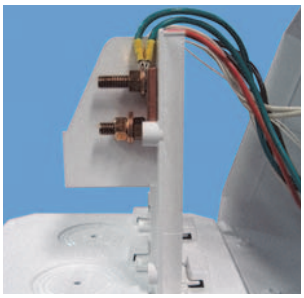

***Copper Busbar with Ratings from 250 to 500 A***

***Cable and Internet Connections***

***New Hingeless Base***

***Optional Meter Socket***

### Available Options

- Digital electronic metering (one, two or three element meters available)
- Built-in meter socket
- 20 A / 125 V GFI receptacle (max. of two GFI receptacles per pedestal)

**Note:** 20 A GFI receptacles are not to be used for shore power.

- High-speed Internet connections
- Wireless remote metering for electric and water
- Transient voltage surge suppressor (TVSS) to protect from voltage surges, spikes or lightning on the AC power line (extends warranty on internal parts to three years)
- Stainless steel door hinge on receptacle main doors
- Single or dual steel 1/4-turn ball valves with 3/4-inches
- Hose bibs and stainless steel handles
- Single or dual phone and/or cable TV connections
- Base cap
- Base extension
- LED lighting

## Catalog Number Selection

**L D U 4 7 0 0 0 0 0 0 1 2 K M**

**Type**

| | |
|---|---|
| **L** | = Lighthouse |
| **S** | = LHSS |

**Lighting and Lens Color**

| | | |
|---|---|---|
| **A** | = 7 W light | Amber |
| **B** | = Dual 7 W light | Amber |
| **C** | = 9 W light | Amber |
| **D** | = 13 W light | Amber |
| **E** | = Dual 13 W light | Amber |
| **F** | = No lighting | Amber |
| **G** | = 7 W light | Clear |
| **H** | = Dual 7 W light | Clear |
| **I** | = 9 W light | Clear |
| **J** | = 13 W light | Clear |
| **K** | = Dual 13 W light | Clear |
| **L** | = No lighting | Clear |
| **M** | = 7 W light | Special |
| **N** | = Dual 7 W light | Special |
| **O** | = 9 W light | Special |
| **P** | = 13 W light | Special |
| **Q** | = Dual 13 W light | Special |
| **R** | = No lighting | Special |
| **S** | = 350 MA LED | Amber |
| **T** | = 700 MA LED | Amber |
| **U** | = 350 MA LED | Clear |
| **V** | = 700 MA LED | Clear |
| **W** | = 350 MA LED | Special |
| **Y** | = 700 MA LED | Special |

**Metering Type**

| | |
|---|---|
| **U** | = Unmetered |
| **D** | = Digital electronic meters (side one) |
| **T** | = Digital electronic meters (side two) |
| **B** | = Digital electronic meters (both sides) |
| **R** | = Receptacles metered individually |
| **M** | = One meter socket (100 A) |
| **N** | = Two meter socket (100 A each) |
| **V** | = 200 A meter socket |

**Sides and Receptacles**

| R1S1 | R2S1 | R3S1 | R4S1 | R1S2 | R2S2 | R3S2 | R4S2 |
|---|---|---|---|---|---|---|---|
| 0 | 0 | 0 | 0 | 0 | 0 | 0 | 0 |
| 1 | 1 | 1 | 1 | 1 | 1 | 1 | 1 |
| 2 | 2 | 2 | 2 | 2 | 2 | 2 | 2 |
| 3 | 3 | 3 | 3 | 3 | 3 | 3 | 3 |
| 4 | 4 | 4 | 4 | 4 | 4 | 4 | 4 |
| 5 | 5 | 5 | 5 | 5 | 5 | 5 | 5 |
| 6 | 6 | 6 | 6 | 6 | 6 | 6 | 6 |
| 7 | 7 | 7 | 7 | 7 | 7 | 7 | 7 |
| 8 | 8 | 8 | 8 | 8 | 8 | 8 | 8 |

| | |
|---|---|
| **0** | = None |
| **1** | = 20 A GFI duplex |
| **2** | = 30 A, 125 V |
| **3** | = 50 A, 125 V |
| **4** | = 50 A, 125/250 V |
| **5** | = 100 A, 208 V |
| **6** | = 100 A, 250 V |
| **7** | = 100 A, 277/480 V |
| **8** | = 100 A, 480 V |

**Water Option ①**

| | |
|---|---|
| **0** | = 0 |
| **1** | = 1 |
| **2** | = 2 |
| **3** | = Single water meter |
| **4** | = Dual water meter |
| **5** | = Single meter, 2 V |
| **6** | = 1 frost free |
| **7** | = 2 frost free |

**Extra Unmetered GFI Receptacles ②**

| | |
|---|---|
| **0** | = None |
| **1** | = 1 |
| **2** | = 2 |

**Phone Cable TV and Internet Options**

| | Phone Jack | Cable TV Jack | Internet Option |
|---|---|---|---|
| **A** = | 1 | 0 | 0 |
| **B** = | 1 | 0 | 1 |
| **C** = | 1 | 0 | 2 |
| **D** = | 1 | 1 | 0 |
| **E** = | 1 | 1 | 1 |
| **F** = | 1 | 1 | 2 |
| **G** = | 1 | 2 | 0 |
| **H** = | 1 | 2 | 1 |
| **I** = | 1 | 2 | 2 |
| **J** = | 2 | 0 | 0 |
| **K** = | 2 | 0 | 1 |
| **L** = | 2 | 0 | 2 |
| **M** = | 2 | 1 | 0 |
| **N** = | 2 | 1 | 1 |
| **O** = | 2 | 1 | 2 |
| **P** = | 2 | 2 | 0 |
| **Q** = | 2 | 2 | 1 |
| **R** = | 2 | 2 | 2 |
| **S** = | 0 | 2 | 2 |
| **T** = | 0 | 0 | 1 |
| **U** = | 0 | 0 | 2 |
| **V** = | 0 | 1 | 0 |
| **W** = | 0 | 1 | 1 |
| **X** = | 0 | 1 | 2 |
| **Y** = | 0 | 2 | 0 |
| **Z** = | 0 | 2 | 1 |
| **0** = | 0 | 0 | 0 |

**Bus**

| | |
|---|---|
| **S** | = Single-phase 3/8-inch copper busbar |
| **F** | = Three-phase 3/8-inch copper busbar |
| **C** | = Single-phase 3/8-inch Canadian busbar |
| **T** | = Three-phase 3/8-inch Canadian busbar |
| **M** | = Single-phase 300 kcmil mechanical lug bus |
| **Z** | = Three-phase 300 kcmil mechanical lug bus |
| **L** | = Single-phase 350 kcmil mechanical lug bus |
| **P** | = Three-phase 350 kcmil mechanical lug bus |
| **N** | = Single-phase 1/4-inch copper busbar |
| **Q** | = Single-phase 1/4-inch split mechanical busbar |

Receptacle: R1S1 = Receptacle 1, Side 1
R2S1 = Receptacle 2, Side 1
R1S2 = Receptacle 1, Side 2
R2S2 = Receptacle 2, Side 2

***Notes***

① Number represents the quantity of 1/4-turn ball valves with 3/4-inch hose bibs.

② Quantity of 20 A GFI duplex receptacles.

**Accessories**

See **Page V1-T5-75**.

**Dimensions**

Approximate Dimensions in Inches (mm)

### Lighthouse

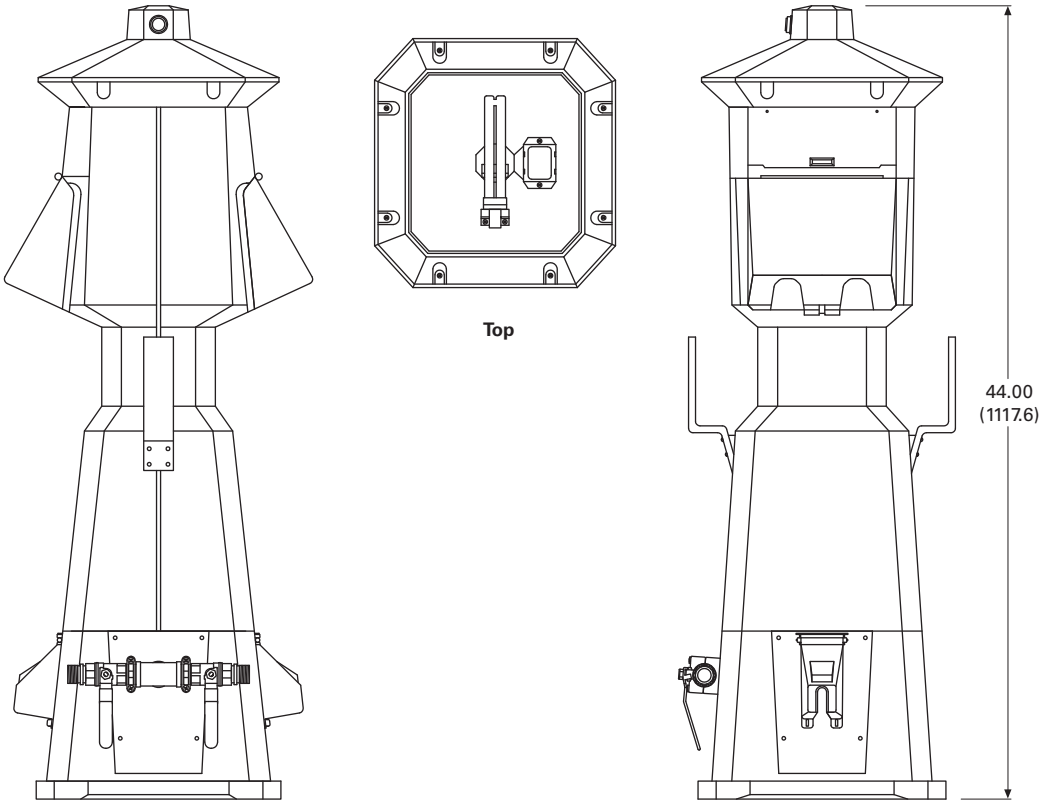


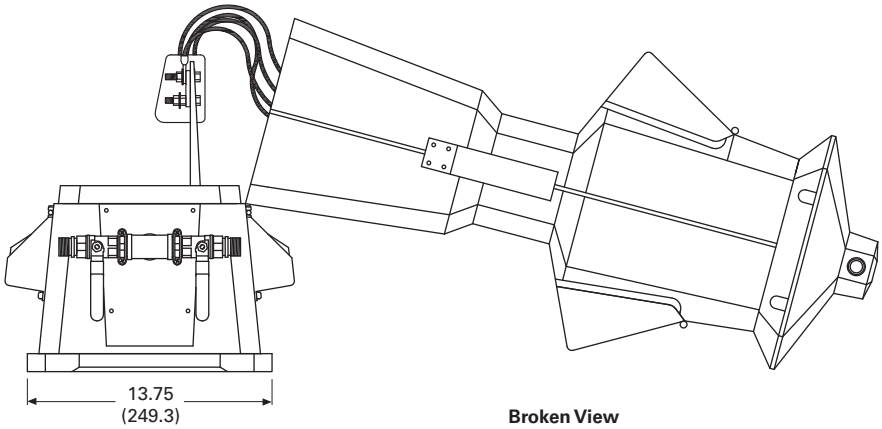

Lighthouse–SS

## Contents


| *Description* | *Page* |
|---|---|
| Power Pedestals | **V1-T5-51** |
| Lighthouse | **V1-T5-54** |
| Lighthouse–SS | |
| Available Options | **V1-T5-59** |
| Catalog Number Selection | **V1-T5-60** |
| Accessories | **V1-T5-61** |
| Dimensions | **V1-T5-61** |
| Admiral–SS | **V1-T5-62** |
| Newport Harbor Mate | **V1-T5-65** |
| Hatteras Light | **V1-T5-69** |
| Firehouse | **V1-T5-73** |
| Smart Start | **V1-T5-79** |
| Mariner | **V1-T5-80** |
| Digital Electronic Kilowatthour Meters | **V1-T5-81** |
| Distribution Equipment—Ground Fault Monitor | **V1-T5-82** |
| Distribution Equipment—Mega Yacht Powerpoint | **V1-T5-83** |
| Distribution Equipment—Substations | **V1-T5-86** |
| Distribution Equipment—Panels | **V1-T5-89** |
| Distribution Equipment—Transformers | **V1-T5-90** |


## Lighthouse–SS

### Product Description

The Lighthouse–SS offers the same standard features and available options as the standard Lighthouse. But, like all of the stainless steel products manufactured here, the Lighthouse–SS is made with high-quality 316L stainless steel for superior quality and performance.

**Note:** 20/125 A GFI receptacle.

**Note:** Wireless remote reading of electronic kilowatt meters.

**Note:** Clear lens.

**Note:** Meter socket for each side powered (to accept glass style meter).

**Note:** Receptacle configurations available:
30 A
30 A / 30 A
30 A / 50 A
50 A / 50 A
100 A (single-phase) 120/240 V
100 A (three-phase) 120/208 V
200 A (three-phase) 480 V

### Features, Benefits and Functions

- Photocell controlled 13 watt fluorescent light (clear lens or amber lens for bug reduction)
- Available with lockable weatherproof doors
- Hose and cable brackets
- Long-lasting maintenance-free 316L stainless steel housing with limited lifetime warranty
- Copper busbar with ratings from 250 to 500 A
- Large removable access panel for easy maintenance and installation
- Backlit faceplate for easy receptacle plug-in at night

## Lighthouse–SS

### Available Options

- Digital electronic metering (one, two or three element meters available)
- 20 A / 125 V GFI receptacle (max. of two GFI receptacles per pedestal)

**Note:** 20 A GFI receptacles are not to be used for shore power.

- High-speed Internet connection
- Wireless remote metering available for water and electricity
- Transient voltage surge suppressor (TVSS) to protect from voltage surges, spikes or lightning on the AC power line (extends warranty on internal parts to three years)
- Single or dual phone and/or cable TV connections
- Single or dual 3/4-inch hose bibs with stainless steel
- Handles LED lighting

*Phone and Cable TV Connections*

*New Door*

*Copper Busbar with Ratings from 250 to 500 A*

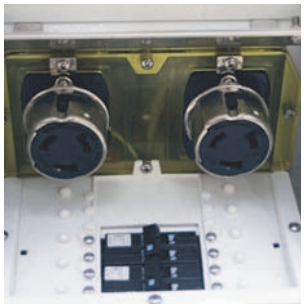

*Backlit Faceplate to Aid in Hooking Up at Night*

## Catalog Number Selection

**L D U 4 7 0 0 0 0 0 0 1 2 K M**

**Type**

| | |
|---|---|
| **L** | = Lighthouse |
| **S** | = LHSS |

**Lighting and Lens Color**

| | | |
|---|---|---|
| **A** | = 7 W light | Amber |
| **B** | = Dual 7 W light | Amber |
| **C** | = 9 W light | Amber |
| **D** | = 13 W light | Amber |
| **E** | = Dual 13 W light | Amber |
| **F** | = No lighting | Amber |
| **G** | = 7 W light | Clear |
| **H** | = Dual 7 W light | Clear |
| **I** | = 9 W light | Clear |
| **J** | = 13 W light | Clear |
| **K** | = Dual 13 W light | Clear |
| **L** | = No lighting | Clear |
| **M** | = 7 W light | Special |
| **N** | = Dual 7 W light | Special |
| **O** | = 9 W light | Special |
| **P** | = 13 W light | Special |
| **Q** | = Dual 13 W light | Special |
| **R** | = No lighting | Special |
| **S** | = 350 MA LED | Amber |
| **T** | = 700 MA LED | Amber |
| **U** | = 350 MA LED | Clear |
| **V** | = 700 MA LED | Clear |
| **W** | = 350 MA LED | Special |
| **Y** | = 700 MA LED | Special |

**Metering Type**

| | |
|---|---|
| **U** | = Unmetered |
| **D** | = Digital electronic meters (side one) |
| **T** | = Digital electronic meters (side two) |
| **B** | = Digital electronic meters (both sides) |
| **R** | = Receptacles metered individually |
| **M** | = One meter socket (100 A) |
| **N** | = Two meter socket (100 A each) |
| **V** | = 200 A meter socket |

**Sides and Receptacles**

| R1S1 | R2S1 | R3S1 | R4S1 | R1S2 | R2S2 | R3S2 | R4S2 |
|---|---|---|---|---|---|---|---|
| 0 | 0 | 0 | 0 | 0 | 0 | 0 | 0 |
| 1 | 1 | 1 | 1 | 1 | 1 | 1 | 1 |
| 2 | 2 | 2 | 2 | 2 | 2 | 2 | 2 |
| 3 | 3 | 3 | 3 | 3 | 3 | 3 | 3 |
| 4 | 4 | 4 | 4 | 4 | 4 | 4 | 4 |
| 5 | 5 | 5 | 5 | 5 | 5 | 5 | 5 |
| 6 | 6 | 6 | 6 | 6 | 6 | 6 | 6 |
| 7 | 7 | 7 | 7 | 7 | 7 | 7 | 7 |
| 8 | 8 | 8 | 8 | 8 | 8 | 8 | 8 |

| | |
|---|---|
| **0** | = None |
| **1** | = 20 A GFI duplex |
| **2** | = 30 A, 125 V |
| **3** | = 50 A, 125 V |
| **4** | = 50 A, 125/250 V |
| **5** | = 100 A, 208 V |
| **6** | = 100 A, 250 V |
| **7** | = 100 A, 277/480 V |
| **8** | = 100 A, 480 V |

**Water Option ①**

| | |
|---|---|
| **0** | = 0 |
| **1** | = 1 |
| **2** | = 2 |
| **3** | = Single water meter |
| **4** | = Dual water meter |
| **5** | = Single meter, 2 V |
| **6** | = 1 frost free |
| **7** | = 2 frost free |

**Extra Unmetered GFI Receptacles ②**

| | |
|---|---|
| **0** | = None |
| **1** | = 1 |
| **2** | = 2 |

**Phone Cable TV and Internet Options**

| | Phone Jack | Cable TV Jack | Internet Option |
|---|---|---|---|
| **A** | = 1 | 0 | 0 |
| **B** | = 1 | 0 | 1 |
| **C** | = 1 | 0 | 2 |
| **D** | = 1 | 1 | 0 |
| **E** | = 1 | 1 | 1 |
| **F** | = 1 | 1 | 2 |
| **G** | = 1 | 2 | 0 |
| **H** | = 1 | 2 | 1 |
| **I** | = 1 | 2 | 2 |
| **J** | = 2 | 0 | 0 |
| **K** | = 2 | 0 | 1 |
| **L** | = 2 | 0 | 2 |
| **M** | = 2 | 1 | 0 |
| **N** | = 2 | 1 | 1 |
| **O** | = 2 | 1 | 2 |
| **P** | = 2 | 2 | 0 |
| **Q** | = 2 | 2 | 1 |
| **R** | = 2 | 2 | 2 |
| **S** | = 0 | 2 | 2 |
| **T** | = 0 | 0 | 1 |
| **U** | = 0 | 0 | 2 |
| **V** | = 0 | 1 | 0 |
| **W** | = 0 | 1 | 1 |
| **X** | = 0 | 1 | 2 |
| **Y** | = 0 | 2 | 0 |
| **Z** | = 0 | 2 | 1 |
| **0** | = 0 | 0 | 0 |

**Bus**

| | |
|---|---|
| **S** | = Single-phase 3/8-inch copper busbar |
| **F** | = Three-phase 3/8-inch copper busbar |
| **C** | = Single-phase 3/8-inch Canadian busbar |
| **T** | = Three-phase 3/8-inch Canadian busbar |
| **M** | = Single-phase 300 kcmil mechanical lug bus |
| **Z** | = Three-phase 300 kcmil mechanical lug bus |
| **L** | = Single-phase 350 kcmil mechanical lug bus |
| **P** | = Three-phase 350 kcmil mechanical lug bus |
| **N** | = Single-phase 1/4-inch copper busbar |
| **Q** | = Single-phase 1/4-inch split mechanical busbar |

Receptacle: R1S1 = Receptacle 1, Side 1
R2S1 = Receptacle 2, Side 1
R1S2 = Receptacle 1, Side 2
R2S2 = Receptacle 2, Side 2

***Notes***

① Number represents the quantity of 1/4-turn ball valves with 3/4-inch hose bibs.

② Quantity of 20 A GFI duplex receptacles.

**Accessories**

See **Page V1-T5-75**.

**Dimensions**

Approximate Dimensions in Inches (mm)

**Lighthouse–SS**

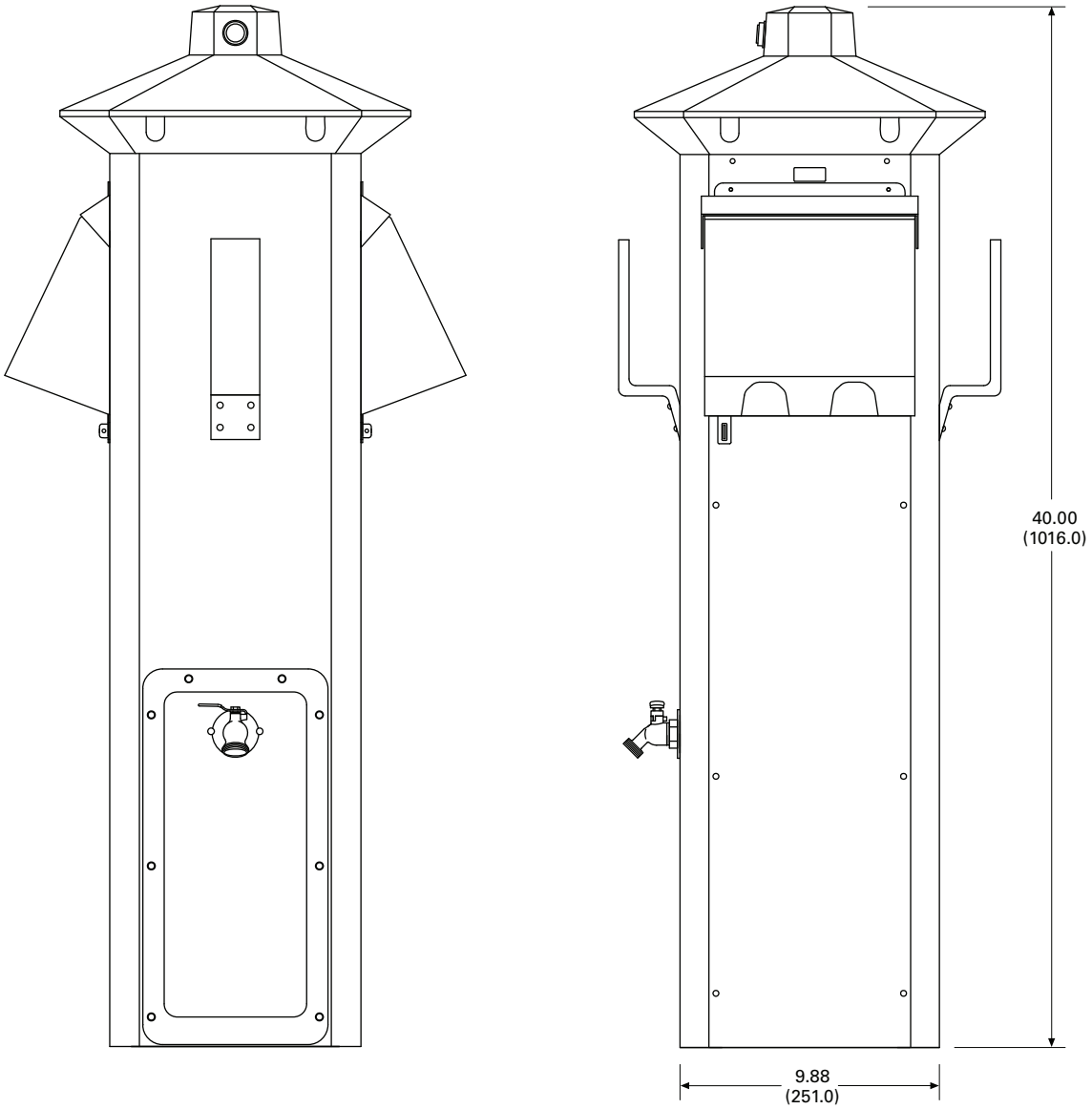

Admiral–SS

## Contents


| Description | Page |
|---|---|
| Power Pedestals | V1-T5-51 |
| Lighthouse | V1-T5-54 |
| Lighthouse–SS | V1-T5-58 |
| Admiral–SS | |
| Catalog Number Selection | V1-T5-63 |
| Accessories | V1-T5-64 |
| Dimensions | V1-T5-64 |
| Newport Harbor Mate | V1-T5-65 |
| Hatteras Light | V1-T5-69 |
| Firehouse | V1-T5-73 |
| Smart Start | V1-T5-79 |
| Mariner | V1-T5-80 |
| Digital Electronic Kilowatthour Meters | V1-T5-81 |
| Distribution Equipment—Ground Fault Monitor | V1-T5-82 |
| Distribution Equipment—Mega Yacht Powerpoint | V1-T5-83 |
| Distribution Equipment—Substations | V1-T5-86 |
| Distribution Equipment—Panels | V1-T5-89 |
| Distribution Equipment—Transformers | V1-T5-90 |


## Admiral–SS

### Product Description

Truly the flagship of our unitized pedestal line, the Admiral–SS possesses amperage capabilities up to 500 A and voltages of 480/277 three-phase, 120/240 single-phase and combinations of these receptacles all in one unit to serve nearly any size Mega Yacht.

### Features

- Heavy 316L stainless steel housing that is powder coated with a polyester resin
- Photocell controlled 13 watt fluorescent light with clear lens that provides 360 degrees of lighting

### Available Options

- Dual phone and/or cable TV connections
- Four 100 A receptacles of any two voltage combinations such as 277/480 three-phase, 120/208 three-phase or 120/240 single-phase
- 200 A / 480 V receptacles
- when the 100 A 120/240 V receptacles are used, two 50 A 120/240 V receptacles can also be provided for a total of 500 A
- 20 A / 125 V GFI receptacle (max. of two GFI receptacles per pedestal)

**Note:** 20 A GFI receptacles are not to be used for shore power.

- Single or dual Cat5 high-speed Internet connections
- Single or dual water 1/4-turn ball valves with 3/4-inch hose bibs and stainless steel handles
- Digital metering available
- Wireless remote metering available for water and electricity
- LED lighting

## Catalog Number Selection

**A D U 4 7 0 0 0 0 0 0 1 2 K M**

**Type**

| | |
|---|---|
| **A** | = Admiral–SS |

**Lighting and Lens Color**

| | | |
|---|---|---|
| **A** | = 7 W light | Amber |
| **B** | = Dual 7 W light | Amber |
| **C** | = 9 W light | Amber |
| **D** | = 13 W light | Amber |
| **E** | = Dual 13 W light | Amber |
| **F** | = No lighting | Amber |
| **G** | = 7 W light | Clear |
| **H** | = Dual 7 W light | Clear |
| **I** | = 9 W light | Clear |
| **J** | = 13 W light | Clear |
| **K** | = Dual 13 W light | Clear |
| **L** | = No lighting | Clear |
| **M** | = 7 W light | Special |
| **N** | = Dual 7 W light | Special |
| **O** | = 9 W light | Special |
| **P** | = 13 W light | Special |
| **Q** | = Dual 13 W light | Special |
| **R** | = No lighting | Special |
| **S** | = 350 MA LED | Amber |
| **T** | = 700 MA LED | Amber |
| **U** | = 350 MA LED | Clear |
| **V** | = 700 MA LED | Clear |
| **W** | = 350 MA LED | Special |
| **Y** | = 700 MA LED | Special |

**Metering Type**

| | |
|---|---|
| **U** | = Unmetered |
| **D** | = Digital electronic meters (side one) |
| **T** | = Digital electronic meters (side two) |
| **B** | = Digital electronic meters (both sides) |
| **M** | = One meter socket (100 A) |
| **N** | = Two meter socket (100 A each) |
| **V** | = 200 A meter socket |

**Sides and Receptacles**

| R1S1 | R2S1 | R3S1 | R4S1 | R1S2 | R2S2 | R3S2 | R4S2 |
|---|---|---|---|---|---|---|---|
| 0 | 0 | 0 | 0 | 0 | 0 | 0 | 0 |
| 1 | 1 | 1 | 1 | 1 | 1 | 1 | 1 |
| 2 | 2 | 2 | 2 | 2 | 2 | 2 | 2 |
| 3 | 3 | 3 | 3 | 3 | 3 | 3 | 3 |
| 4 | 4 | 4 | 4 | 4 | 4 | 4 | 4 |
| 5 | 5 | 5 | 5 | 5 | 5 | 5 | 5 |
| 6 | 6 | 6 | 6 | 6 | 6 | 6 | 6 |
| 7 | 7 | 7 | 7 | 7 | 7 | 7 | 7 |
| 8 | 8 | 8 | 8 | 8 | 8 | 8 | 8 |

| | |
|---|---|
| **0** | = None |
| **1** | = 20 A GFI duplex |
| **2** | = 30 A, 125 V |
| **3** | = 50 A, 125 V |
| **4** | = 50 A, 125/250 V |
| **5** | = 100 A, 208 V |
| **6** | = 100 A, 250 V |
| **7** | = 100 A, 277/480 V |
| **8** | = 100 A, 480 V |

**Water Option ①**

| | |
|---|---|
| **0** | = 0 |
| **1** | = 1 |
| **2** | = 2 |
| **3** | = Single water meter |
| **4** | = Dual water meter |
| **5** | = Single meter, 2 V |

**Extra Unmetered GFI Receptacles**

| | |
|---|---|
| **0** | = None |
| **1** | = 1 |
| **2** | = 2 |

**Phone Cable TV and Internet Options**

| Phone Jack | Cable TV Jack | Internet Option ② |
|---|---|---|
| **A** = 1 | 0 | 0 |
| **B** = 1 | 0 | 1 |
| **C** = 1 | 0 | 2 |
| **D** = 1 | 1 | 0 |
| **E** = 1 | 1 | 1 |
| **F** = 1 | 1 | 2 |
| **G** = 1 | 2 | 0 |
| **H** = 1 | 2 | 1 |
| **I** = 1 | 2 | 2 |
| **J** = 2 | 0 | 0 |
| **K** = 2 | 0 | 1 |
| **L** = 2 | 0 | 2 |
| **M** = 2 | 1 | 0 |
| **N** = 2 | 1 | 1 |
| **O** = 2 | 1 | 2 |
| **P** = 2 | 2 | 0 |
| **Q** = 2 | 2 | 1 |
| **R** = 2 | 2 | 2 |
| **S** = 0 | 2 | 2 |
| **T** = 0 | 0 | 1 |
| **U** = 0 | 0 | 2 |
| **V** = 0 | 1 | 0 |
| **W** = 0 | 1 | 1 |
| **X** = 0 | 1 | 2 |
| **Y** = 0 | 2 | 0 |
| **Z** = 0 | 2 | 1 |
| **0** = 0 | 0 | 0 |

**Bus**

| | |
|---|---|
| **S** | = Single-phase 3/8-inch copper busbar |
| **F** | = Three-phase 3/8-inch copper busbar |
| **C** | = Single-phase 3/8-inch Canadian busbar |
| **T** | = Three-phase 3/8-inch Canadian busbar |
| **M** | = Single-phase 300 kcmil mechanical lug bus |
| **Z** | = Three-phase 300 kcmil mechanical lug bus |
| **L** | = Single-phase 350 kcmil mechanical lug bus |
| **P** | = Three-phase 350 kcmil mechanical lug bus |
| **N** | = Single-phase 1/4-inch copper busbar |
| **Q** | = Single-phase 1/4-inch split mechanical busbar |
| **D** | = Dual-phase busbar |

Receptacles: R1S1 = Receptacle 1, Side 1
R2S1 = Receptacle 2, Side 1
R3S1 = Receptacle 3, Side 1
R4S1 = Receptacle 3, Side 1
R1S2 = Receptacle 1, Side 2
R2S2 = Receptacle 2, Side 2
R3S2 = Receptacle 3, Side 2
R4S2 = Receptacle 3, Side 2

***Notes***

① Number represents the quantity of 1/4-turn ball valves with 3/4-inch hose bibs.

② Number represents the quantity of RJ-45 high-speed Internet jacks.

Internet option also available. Contact factory for details.

**Accessories**

See **Page V1-T5-75**.

**Dimensions**

Approximate Dimensions in Inches (mm)

### Admiral–SS

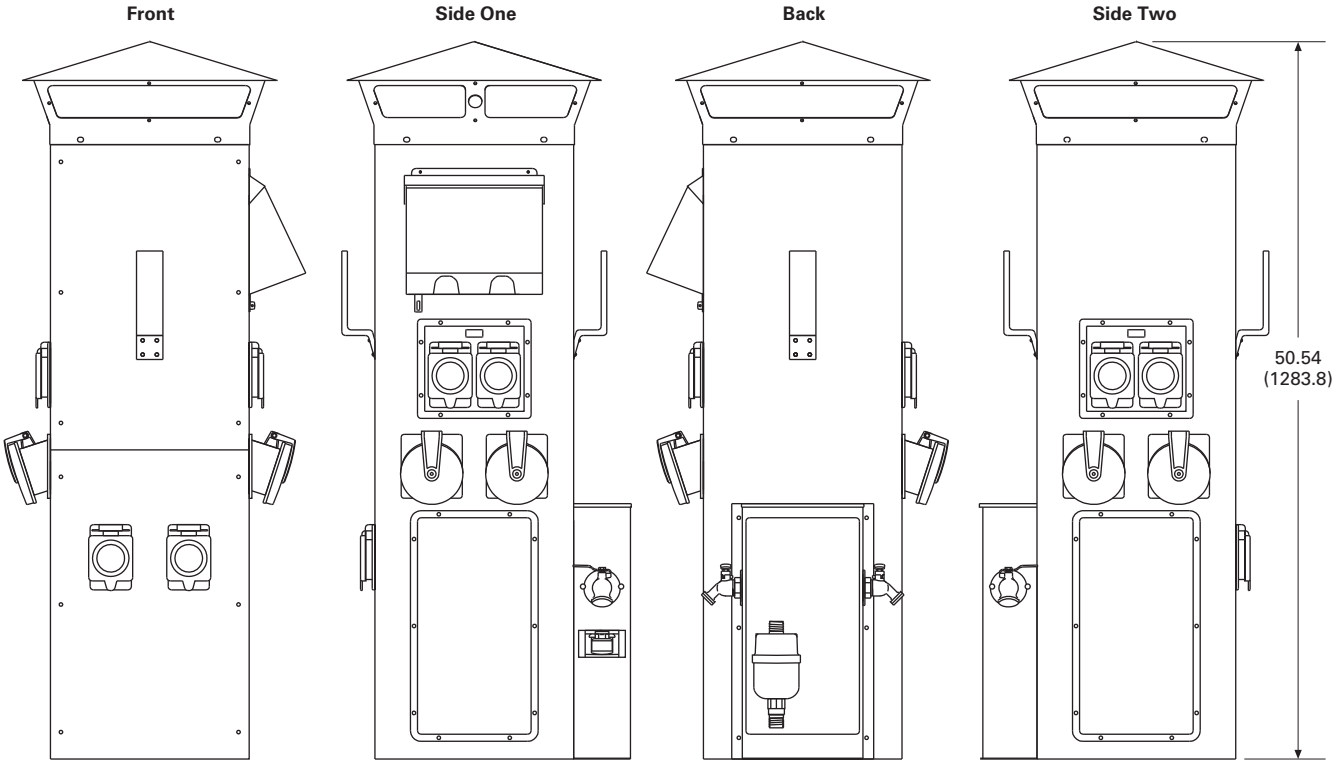


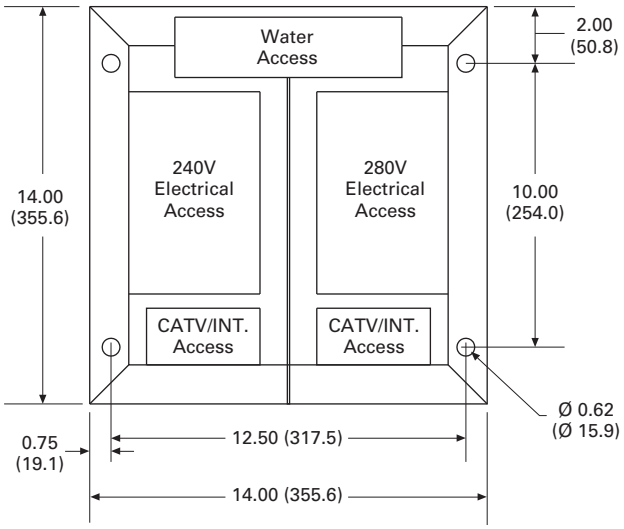


**Base Footprint**

Newport Harbor Mate

## Contents


| *Description* | *Page* |
|---|---|
| Power Pedestals | **V1-T5-51** |
| Lighthouse | **V1-T5-54** |
| Lighthouse–SS | **V1-T5-58** |
| Admiral–SS | **V1-T5-62** |
| Newport Harbor Mate | |
| Available Options | **V1-T5-66** |
| Catalog Number Selection | **V1-T5-67** |
| Accessories | **V1-T5-68** |
| Dimensions | **V1-T5-68** |
| Hatteras Light | **V1-T5-69** |
| Firehouse | **V1-T5-73** |
| Smart Start | **V1-T5-79** |
| Mariner | **V1-T5-80** |
| Digital Electronic Kilowatthour Meters | **V1-T5-81** |
| Distribution Equipment—Ground Fault Monitor | **V1-T5-82** |
| Distribution Equipment—Mega Yacht Powerpoint | **V1-T5-83** |
| Distribution Equipment—Substations | **V1-T5-86** |
| Distribution Equipment—Panels | **V1-T5-89** |
| Distribution Equipment—Transformers | **V1-T5-90** |




## Newport Harbor Mate

### Product Description

Five years of development and 30 prototype models have yielded this unit the most innovative mini-power center available. Host to a variety of electrical services, contained in a compact yet strong housing, the Newport Harbor Mate is packed with features.

### Features, Benefits and Functions

- Tough and durable resin housing with UV inhibitor for lasting finish
- Photocell controlled 7 and 9 watt fluorescent light (clear lens or amber lens for bug reduction)
- Designed to mount on a dock box, piling or stainless steel stand
- Copper busbar with a maximum rating of 140 A

## Newport Harbor Mate (Shown with Optional Stand)

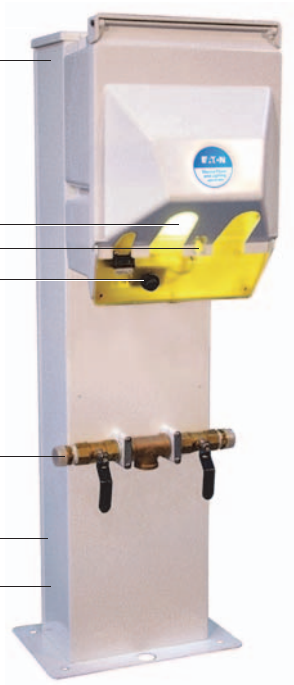


### Available Options

- Available with single, dual or combination of 30 A or 50 A receptacles
- 20 A / 125 V GFI receptacle (max. of two GFI receptacles per pedestal)

**Note:** 20 A GFI receptacles are not to be used for shore power.

- Single or dual phone, cable TV, high-speed Internet connections
- Electronic metering (one or two element meters available)
- 316L stainless steel stand
- LED lighting

***Mounting Option***

***Backlit Faceplate***

## Catalog Number Selection

**N A Y B U 4 3 0 1 1 2 W M**

**Type**
- **N** = NP Harbor Mate
- **C** = NP Camp Mate

**Photocell**
- **Y** = Yes
- **N** = No

**Lighting and Lens Color**

| | |
|---|---|
| **A** = 7 W light | Amber |
| **C** = 9 W light | Amber |
| **F** = No lighting | Amber |
| **G** = 7 W light | Clear |
| **I** = 9 W light | Clear |
| **L** = No lighting | Clear |
| **M** = 7 W light | Special |
| **O** = 9 W light | Special |
| **R** = No lighting | Special |
| **S** = 350 MA LED | Amber |
| **T** = 700 MA LED | Amber |
| **U** = 350 MA LED | Clear |
| **V** = 700 MA LED | Clear |
| **W** = 350 MA LED | Special |
| **Y** = 700 MA LED | Special |

**Lighting Protection**
- **B** = Breaker protected
- **F** = Fuse protected

**Metering Type** ①
- **U** = Unmetered
- **D** = Digital electronic meters
- **R** = Receptacles metered individually

**Sides and Receptacles**

| R1S1 | R2S1 | R3S1 |
|---|---|---|
| **0** | **0** | **0** |
| **1** | **1** | **1** |
| **2** | **2** | |
| **3** | **3** | |
| **4** | **4** | |

- **0** = None
- **1** = 20 A GFI duplex
- **2** = 30 A, 125 V
- **3** = 50 A, 125 V
- **4** = 50 A, 125/250 V

**Stand**
- **0** = 0
- **1** = 1

**Water Option** ②
- **0** = 0
- **1** = 1
- **2** = 2

**Hard Wired Breakers**

**S1**
- **0** = None
- **2** = 20 A, two-pole
- **3** = 30 A

**Bus**
- **S** = Single-phase 1/4-inch copper busbar
- **F** = Three-phase 1/4-inch copper busbar
- **C** = Single-phase 1/4-inch Canadian busbar
- **M** = Mechanical lug 2/0
- **Q** = Single-phase 1/4-inch split mechanical busbar (with stand ONLY)
- **A** = 1/4-inch Canadian mechanical

**Phone Cable TV and Internet Options**

| | Phone Jack | Cable TV Jack | Internet Option |
|---|---|---|---|
| **A** = | 1 | 0 | 0 |
| **B** = | 1 | 0 | 1 |
| **C** = | 1 | 0 | 2 |
| **D** = | 1 | 1 | 0 |
| **E** = | 1 | 1 | 1 (Camp Mate only) |
| **T** = | 0 | 0 | 1 |
| **V** = | 0 | 1 | 0 |
| **W** = | 0 | 1 | 1 |
| **0** = | 0 | 0 | 0 |

Receptacles: R1 = Receptacle 1
R2 = Receptacle 2

***Notes***

① 20 A GFIs not metered.

② Number represents the quantity of 1/4-turn ball valves with 3/4-inch hose bibs (with stand only).

**Accessories**

See **Page V1-T5-75**.

**Dimensions**

Approximate Dimensions in Inches (mm)

### Newport Harbor Mate

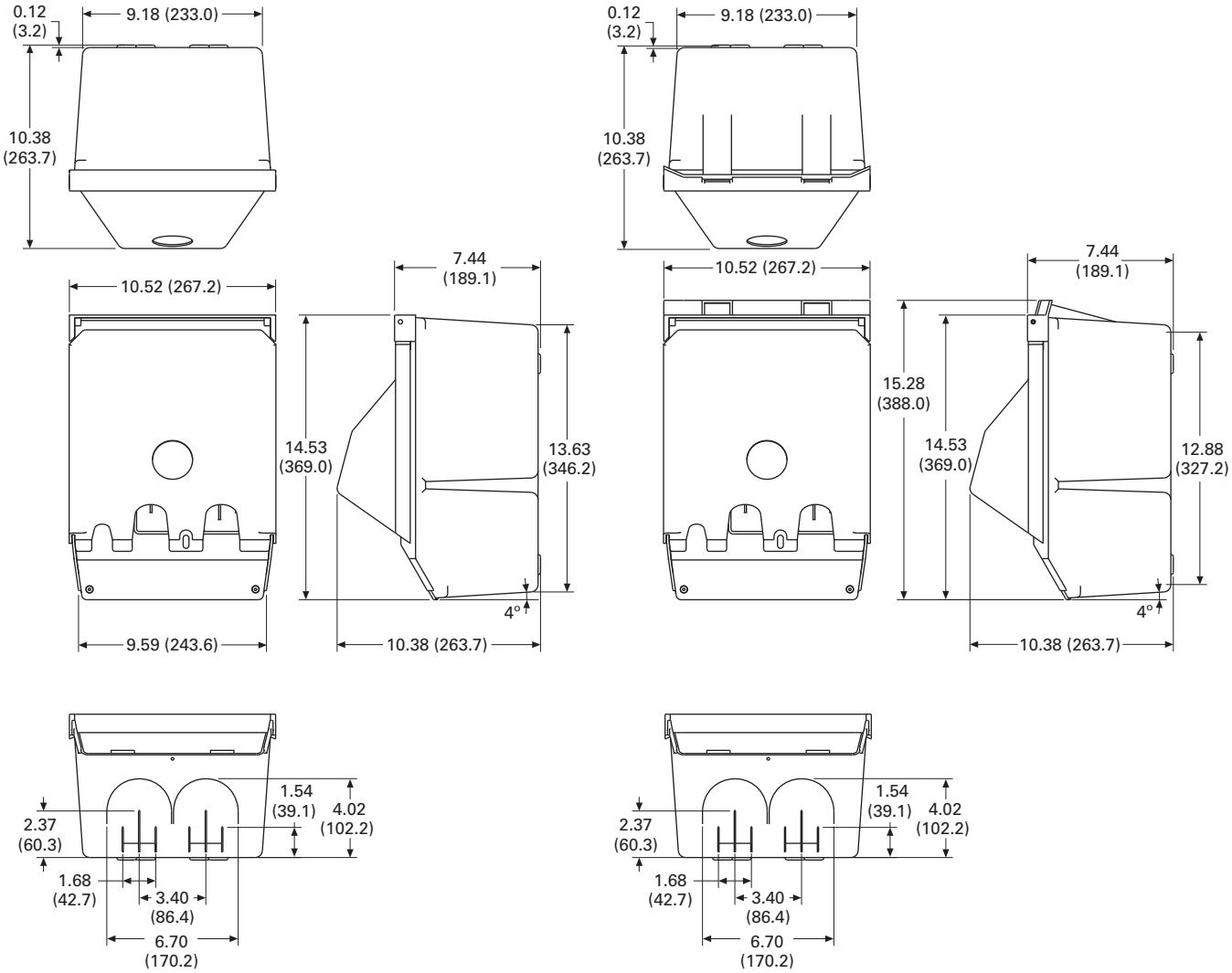


**Newport Redesign**

**Newport Redesign With Meters**

Hatteras Light

## Contents


| *Description* | *Page* |
|---|---|
| Power Pedestals | **V1-T5-51** |
| Lighthouse | **V1-T5-54** |
| Lighthouse–SS | **V1-T5-58** |
| Admiral–SS | **V1-T5-62** |
| Newport Harbor Mate | **V1-T5-65** |
| Hatteras Light | |
| Available Options | **V1-T5-70** |
| Catalog Number Selection | **V1-T5-71** |
| Accessories | **V1-T5-72** |
| Dimensions | **V1-T5-72** |
| Firehouse | **V1-T5-73** |
| Smart Start | **V1-T5-79** |
| Mariner | **V1-T5-80** |
| Digital Electronic Kilowatthour Meters | **V1-T5-81** |
| Distribution Equipment—Ground Fault Monitor | **V1-T5-82** |
| Distribution Equipment—Mega Yacht Powerpoint | **V1-T5-83** |
| Distribution Equipment—Substations | **V1-T5-86** |
| Distribution Equipment—Panels | **V1-T5-89** |
| Distribution Equipment—Transformers | **V1-T5-90** |




## Hatteras Light

### Product Description

The Hatteras® Light is an elegant and low cost alternative to the Lighthouse. It uses the same 360 degree light assembly as the Lighthouse, yet is only 30 inches tall. Thousands of these attractive pedestals are found not only in marinas, but also around pools, deck areas, boardwalks and landscape areas. The housing will never rust or corrode and comes with a limited lifetime warranty. This unit is popular for smaller slips at marinas with the Lighthouse and for private docks.

**Note:** Wireless remote reading of electronic kilowatt meters.

**Note:** Clear lens.

**Note:** Custom paint color.

### Features, Benefits and Functions

- Photocell controlled 13 watt fluorescent light (clear lens or amber lens for bug reduction)
- Circuit breakers
- Heavy resin housing with a two-part polyurethane coating for a UV resistant, long-lasting finish
- Copper busbar with a maximum rating of 140 A

## Hatteras Light

### Available Options

- 20 A / 125 V GFI receptacle (max. of two GFI receptacles per pedestal)

**Note:** 20 A GFI receptacles are not to be used for shore power.

- Digital electronic metering (one or two element meter available)
- Single or dual phone, cable TV, high-speed Internet connections
- Single or dual 1/2-inch or 3/4-inch silcock with stainless steel handles
- LED lighting

*Copper Busbar with Ratings up to 140 A*

*20 A / 125 A GFI Receptacle*

*Faceplate*

## Catalog Number Selection

**H D Y B D 4 7 0 1 2 A M**

**Type**

| | |
|---|---|
| **H** | = Hatteras Light |
| **R** | = Park Light |

**Photocell**

| | |
|---|---|
| **Y** | = Yes |
| **N** | = No |

**Lighting Protection**

| | |
|---|---|
| **B** | = Breaker protected |
| **F** | = Fuse protected |

**Metering Type** ①

| | |
|---|---|
| **U** | = Unmetered |
| **D** | = Digital electronic meters |
| **R** | = Receptacles metered individually |

**Lighting and Lens Color**

| | | |
|---|---|---|
| **A** | = 7 W light | Amber |
| **B** | = Dual 7 W light | Amber |
| **C** | = 9 W light | Amber |
| **D** | = 13 W light | Amber |
| **E** | = Dual 13 W light | Amber |
| **F** | = No lighting | Amber |
| **G** | = 7 W light | Clear |
| **H** | = Dual 7 W light | Clear |
| **I** | = 9 W light | Clear |
| **J** | = 13 W light | Clear |
| **K** | = Dual 13 W light | Clear |
| **L** | = No lighting | Clear |
| **M** | = 7 W light | Special |
| **N** | = Dual 7 W light | Special |
| **O** | = 9 W light | Special |
| **P** | = 13 W light | Special |
| **Q** | = Dual 13 W light | Special |
| **R** | = No lighting | Special |
| **S** | = 350 MA LED | Amber |
| **T** | = 700 MA LED | Amber |
| **U** | = 350 MA LED | Clear |
| **V** | = 700 MA LED | Clear |
| **W** | = 350 MA LED | Special |
| **Y** | = 700 MA LED | Special |

**Sides and Receptacles**

| R1S1 | R2S1 | R1S2 |
|---|---|---|
| **0** | **0** | **0** |
| **1** | **1** | **1** |
| **2** | **2** | **2** |
| **3** | **3** | **3** |
| **4** | **4** | **4** |

| | |
|---|---|
| **0** | = None |
| **1** | = 20 A GFI duplex |
| **2** | = 30 A, 125 V |
| **3** | = 50 A, 125 V |
| **4** | = 50 A, 125/250 V |

**Water Option** ②

| | |
|---|---|
| **0** | = 0 |
| **1** | = 1 (1/2-inch) |
| **2** | = 2 (1/2-inch) |
| **3** | = 1 (3/4-inch) |
| **4** | = 2 (3/4-inch) |

**Hard Wired Breakers**

| S1 | |
|---|---|
| **0** | = None |
| **2** | = 20 A, two-pole |
| **3** | = 30 A |

**Bus**

| | |
|---|---|
| **S** | = Single-phase 1/4-inch copper busbar |
| **F** | = Three-phase 1/4-inch copper busbar |
| **C** | = Single-phase 1/4-inch Canadian busbar |
| **M** | = Mechanical lug 2/0 ③ |
| **A** | = 1/4-inch Canadian mechanical |

**Phone Cable TV and Internet Options**

| | Phone Jack | Cable TV Jack | Internet Option |
|---|---|---|---|
| **A** = | 1 | 0 | 0 |
| **B** = | 1 | 0 | 1 |
| **C** = | 1 | 0 | 2 |
| **D** = | 1 | 1 | 0 |
| **E** = | 1 | 1 | 1 |
| **F** = | 1 | 1 | 2 |
| **G** = | 1 | 2 | 0 |
| **H** = | 1 | 2 | 1 |
| **I** = | 1 | 2 | 2 |
| **J** = | 2 | 0 | 0 |
| **M** = | 2 | 1 | 0 |
| **P** = | 2 | 2 | 0 |
| **S** = | 0 | 2 | 2 |
| **T** = | 0 | 0 | 1 |
| **U** = | 0 | 0 | 2 |
| **V** = | 0 | 1 | 0 |
| **W** = | 0 | 1 | 1 |
| **X** = | 0 | 1 | 2 |
| **Y** = | 0 | 2 | 0 |
| **Z** = | 0 | 2 | 1 |

Receptacles: R1 = Receptacle 1
R2 = Receptacle 2

***Notes***

① 20 A GFIs not metered.
② Number represents the quantity of 1/4-turn ball valves with 3/4-inch hose bibs.
③ Wire size #2/0 kcmil or less.

**Accessories**

See **Page V1-T5-75**.

**Dimensions**

Approximate Dimensions in Inches (mm)

### Hatteras

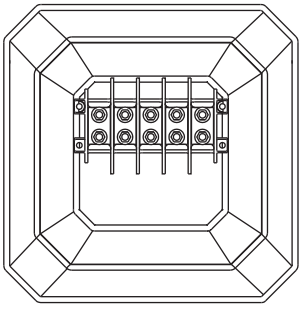

**Busbar Access Top Removed**

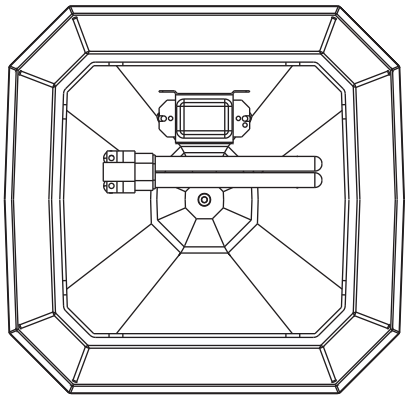

**Inside Top**

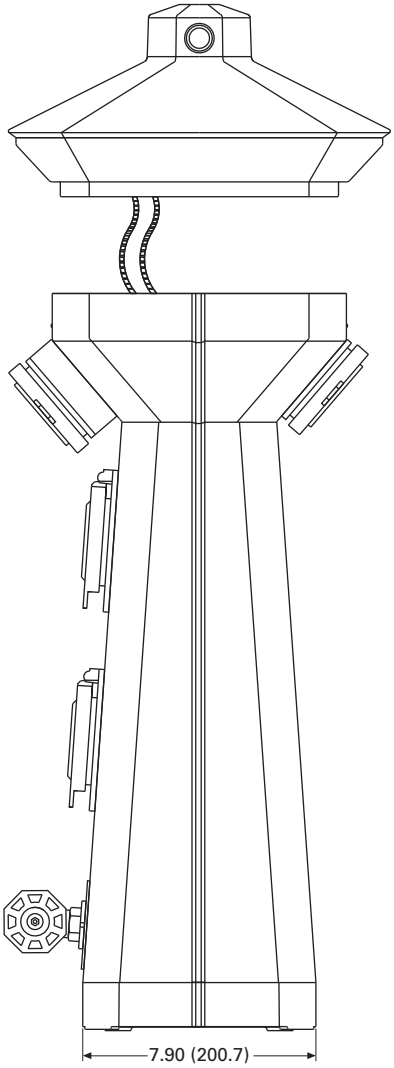


**Side View**

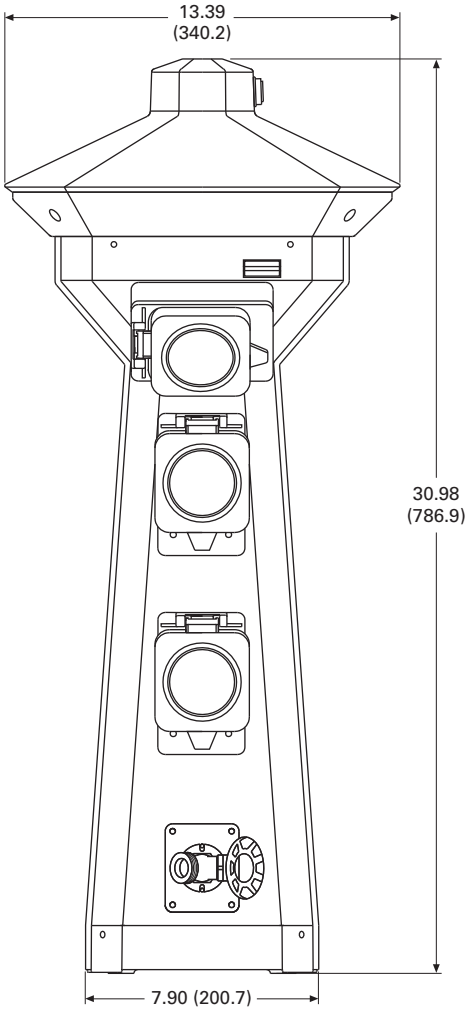


**Front View**

Firehouse

## Contents


| *Description* | *Page* |
|---|---|
| Power Pedestals | V1-T5-51 |
| Lighthouse | V1-T5-54 |
| Lighthouse–SS | V1-T5-58 |
| Admiral–SS | V1-T5-62 |
| Newport Harbor Mate | V1-T5-65 |
| Hatteras Light | V1-T5-69 |
| Firehouse | |
| Available Options | V1-T5-74 |
| Catalog Number Selection | V1-T5-74 |
| Accessories | V1-T5-75 |
| Dimensions | V1-T5-78 |
| Smart Start | V1-T5-79 |
| Mariner | V1-T5-80 |
| Digital Electronic Kilowatthour Meters | V1-T5-81 |
| Distribution Equipment—Ground Fault Monitor | V1-T5-82 |
| Distribution Equipment—Mega Yacht Powerpoint | V1-T5-83 |
| Distribution Equipment—Substations | V1-T5-86 |
| Distribution Equipment—Panels | V1-T5-89 |
| Distribution Equipment—Transformers | V1-T5-90 |




## Firehouse

### Product Description

Created as a complete solution for fire and rescue needs, this pedestal features fire extinguisher storage and a mounted alarm strobe light and siren, as well as an optional life ring. This unit is well equipped for any marina emergency. The alarm strobe light and siren can be automatically activated when the door is open or optional life ring is removed.

### Features, Benefits and Functions

- Alarm strobe light and siren: automatically activated when door is open or optional life ring is removed
- Photocell controlled 13 watt fluorescent light (clear lens or amber lens for bug reduction)
- 10 lb ABC Type fire extinguisher
- 316L stainless steel polyester powder-coated housing
- Polycarbonate top assembly

### Firehouse

### Available Options

- 24-inch life ring
- 20 lb ABC Type fire extinguisher available

### Catalog Number Selection

**F A Y A E N**

**Type**
**F** = Firehouse

**Photocell**
**Y** = Yes
**N** = No

**Alarm/Strobe**
**A** = Include alarm/strobe
**N** = No alarm/strobe

**Fire Extinguisher**
**E** = Include 10 lb extinguisher
**N** = No extinguisher
**X** = Include 20 lb extinguisher

**24-Inch Life Ring**
**R** = Include life ring
**N** = No life ring

**Lighting and Lens Color**

| | | | | | |
|---|---|---|---|---|---|
| **A** = 7 W light | Amber | **I** = 9 W light | Clear | **Q** = Dual 13 W light | Special |
| **B** = Dual 7 W light | Amber | **J** = 13 W light | Clear | **R** = No lighting | Special |
| **C** = 9 W light | Amber | **K** = Dual 13 W light | Clear | **S** = 350 MA LED | Amber |
| **D** = 13 W light | Amber | **L** = No lighting | Clear | **T** = 700 MA LED | Amber |
| **E** = Dual 13 W light | Amber | **M** = 7 W light | Special | **U** = 350 MA LED | Clear |
| **F** = No lighting | Amber | **N** = Dual 7 W light | Special | **V** = 700 MA LED | Clear |
| **G** = 7 W light | Clear | **O** = 9 W light | Special | **W** = 350 MA LED | Special |
| **H** = Dual 7 W light | Clear | **P** = 13 W light | Special | **Y** = 700 MA LED | Special |

## Accessories

***Accessories for Custom Design Marina Products, Resin and Stainless Steel Pedestals and Power Products***

### Replacement Parts Catalog Numbers

| Description | Catalog Number |
|---|---|
| **Receptacles** | |
| 20 A GFCI duplex | **MPL3038** |
| 30 A 125 V twistlock | **MPL3039** |
| 50 A 125 V twistlock | **MPL3040** |
| 50 A 125/250 V twistlock | **MPL3045** |
| 100 A 120/240 V pin and sleeve | **MPL4100R12W** |
| 100 A 120/208 pin and sleeve | **MPL5100R9W** |
| 100 A 480 V four-wire pin and sleeve | **MPL4100R7W** |
| 100 A 480 V five-wire pin and sleeve | **MPL5100R7W** |
| 200 A 277/480 V pin and sleeve (Russellstoll®) | **MPL4200R7W** |
| 30 A 125 V RV | **RV3042** |
| 50 A 125/250 V RV | **RV3043** |
| **Circuit Breakers** | |
| 20 A 125 V single-pole | **QCF1020** |
| 20 A 125 V single-pole GFCI | **QCGF1020** |
| 30 A 125 V single-pole | **QCF1030** |
| 30 A 125 V single-pole GFCI | **QCGF1030** |
| 50 A 125 V single-pole | **QCF1050** |
| 20 A 125/250 V two-pole | **QCF2020** |
| 20 A 125/250 V two-pole GFCI | **QCGF2020** |
| 30 A 125/250 V two-pole | **QCF2030** |
| 30 A 125/250 V two-pole GFCI | **QCGF2030** |
| 50 A 125/250 V two-pole | **QCF2050** |
| 50 A 125/250 V two-pole GFCI | **QCGF2050** |
| 60 A 125/250 V two-pole | **QCF2060** |
| 100 A 125/250 V two-pole | **GHC2100D** |
| 100 A 120/208 V three-pole | **GHC3100D** |
| 200 A 277/480 V three-pole | **JT2200FA** |
| **Fluorescent Light Assembly** | |
| 13 watt 120 V 60 Hz ballast | **MPL2400** |
| 7 watt 120 V 60 Hz ballast | **MPL2401** |
| 13 watt socket | **MPL3079** |
| 7 watt socket | **MPL3077** |
| 13 watt fluorescent bulb | **MPL3018** |
| 7 watt fluorescent bulb | **MPL3019** |
| Photocell | **MPL3044** |
| Photocell nuts | **MPL3034** |
| Lighthouse in-line fuse | **MPL3026** |
| Lighthouse in-line fuse holder | **MPL3027** |
| **Lighthouse, Lighthouse–SS, Powerhouse, Powerhouse–SS, Hatteras, Park Light** | |
| Top with complete light and lens assembly | **MPL6003A** |
| Top with complete light and lens assembly—fused | **MPL6003FA** |
| Top only | **MPL6003** |
| Amber lens | **MPL6005** |
| Clear lens | **MPL6008** |

### Replacement Parts Catalog Numbers, continued

| Description | Catalog Number |
|---|---|
| **Lighthouse, Lighthouse–SS, Powerhouse, Powerhouse–SS, Hatteras, Park Light, continued** | |
| 20 A GFCI receptacle external cover set | **MPL1101** |
| 30 A receptacle external cover set | **MPL1102** |
| 50 A receptacle external cover set | **MPL1105** |
| Single-pole external breaker cover set | **MPL11061** |
| Two-pole external breaker cover set | **MPL11062** |
| Three-pole external breaker cover set | **MPL11063** |
| **Lighthouse, Lighthouse–SS, Powerhouse, Powerhouse–SS** | |
| Lighthouse/Powerhouse pedestal main housing | **MPL6006** |
| Lighthouse–SS/Powerhouse–SS pedestal main housing | **MPL6006S** |
| Lighthouse/Powerhouse main door | **MPL6007** |
| Lighthouse–SS/Powerhouse–SS main door | **MPL6007S** |
| Lighthouse/Powerhouse spring closure | **MPL1099** |
| Lighthouse Powerhouse top isolation plate | **MPL6012** |
| Lighthouse/Lighthouse–SS breaker plate | **MPL1141** |
| Powerhouse/Powerhouse–SS breaker plate | **RV1112** |
| Lighthouse/Lighthouse–SS/Powerhouse/ Powerhouse–SS Hose and cable brackets | **MPL1087** |
| Lighthouse/Powerhouse stainless steel hinge | **MPL1088** |
| Lighthouse/Powerhouse complete pedestal base with busbar assembly | **MPL6004A** |
| Lighthouse/Powerhouse complete pedestal base with three-phase busbar assembly | **MPL6004FA** |
| Lighthouse/Powerhouse pedestal base without busbars | **MPL6004** |
| Lighthouse/Powerhouse aluminum blank access panel | **MPL5500** |
| Lighthouse/Lighthouse–SS/Powerhouse/ Powerhouse–SS complete busbar assembly | **MPL1140A** |
| Lighthouse/Lighthouse–SS/Powerhouse/Powerhouse–SS complete three-phase busbar assembly | **MPL1140FA** |
| Copper busbar with nuts and washers | **MPL3471** |
| 20 A GFCI—00 amber resin faceplate | **MPL1120** |
| 30 A—20 GFCI amber resin faceplate | **MPL1121** |
| 30–50 A amber resin faceplate | **MPL1122** |
| 30–30 A amber resin faceplate | **MPL1127** |
| 30–00 A amber resin faceplate | **MPL1129** |
| 50–50 A amber resin faceplate | **MPL1123** |
| 50 A—20 GFCI amber resin faceplate | **MPL1124** |
| 20 GFCI—20 GFCI amber resin faceplate | **MPL1125** |
| 00–00 amber resin faceplate | **MPL1126** |
| 50 A—00 amber resin faceplate | **MPL1128** |
| 100 A faceplate | **MPL1142** |
| 20 A GFCI—00 amber resin faceplate assembly with breakers | **MPL1120A** |
| 30 A—20 GFCI amber resin faceplate assembly with breakers | **MPL1121A** |
| 30–50 A amber resin faceplate assembly with breakers | **MPL1122A** |

## Replacement Parts Catalog Numbers, continued

| Description | Catalog Number |
|---|---|
| **Lighthouse, Lighthouse–SS, Powerhouse, Powerhouse–SS, continued** | |
| 30–30 A amber resin faceplate assembly with breakers | **MPL1127A** |
| 50–50 A amber resin faceplate assembly with breakers | **MPL1123A** |
| 50 A—20 GFCI amber resin faceplate assembly with breakers | **MPL1124A** |
| 20 GFCI—20 GFCI amber resin faceplate assembly with breakers | **MPL1125A** |
| 50 A—00 amber resin faceplate assembly with breakers | **MPL1128A** |
| 30–00 A faceplate assembly with breakers | **MPL1129A** |
| 100 A faceplate assembly with breakers | **MPL1142A** |
| Powerhouse 30–50 receptacle plate | **RV1143** |
| Powerhouse (30 A—00) receptacle plate | **RV11433** |
| Powerhouse (50 A—00) receptacle plate | **RV11435** |
| Powerhouse breaker plate | **RV1112** |
| **Phone, Cable, Internet Assemblies** | |
| Lighthouse/Powerhouse complete phone and cable assembly | **MPL1114/RV1114** |
| Lighthouse–SS/Powerhouse–SS/Hatteras Light/Park Light complete phone and cable assembly | **MPL1119/RV1119** |
| Hatteras Light/Park Light complete phone and cable assembly | **MPL1119** |
| Newport Harbor Mate/Camp Mate phone and cable insert assembly | **MPL1115/RV1115** |
| Lighthouse/Powerhouse access plates with dual Internet jacks | **MPL5501** |
| Coax cable TV FCF female adpt. with lugnut and washer | **MPL1086** |
| RJ45 CAT5e high-speed internet jack | **MPL3059** |
| Marine phone receptacle | **MPL3037** |
| RJ12 CAT3 phone jack | **RV3060** |
| **Water Assemblies** | |
| Lighthouse/Powerhouse complete water manifold assembly (dual 3/4-inch hose bibs with 1/4-turn ball valves) | **MPL11A** |
| Newport Harbor Mate/Newport Camp Mate water manifold assembly (dual 3/4-inch hose bibs with 1/4-turn ball valves) | **MPL11C** |
| 3/4-inch hose adapter | **MPL7030** |
| Lighthouse/Powerhouse water mounting plate with mounting brackets | **MPL1132** |
| Hatteras Light/Park Light aluminum water mounting plate | **MPL6584** |
| 1/2-inch brass silcock (hose bib) | **MPL7014** |
| 3/4-inch stainless steel silcock (hose bib) | **MPL5271** |
| 3/4-inch brass ball valve | **MPL7021** |
| Watts 3/4-inch backflow preventer | **MPL7015** |

## Replacement Parts Catalog Numbers, continued

| Description | Catalog Number |
|---|---|
| **Digital Electronic Meters** | |
| Single element, 14-pin quick disconnect (no CTs) | **MPL17A1** |
| Single element, 14-pin quick disconnect (with CTs) | **MPL17A2** ① |
| Single element, 14-pin quick disconnect (with CTs) | **MPL17A2** ② |
| Dual element, 14-pin quick disconnect (no CTs) | **MPL17B1** |
| Dual element, 14-pin quick disconnect (with CTs) | **MPL17B2** ① |
| Dual element, 14-pin quick disconnect (with CTs) | **MPL17B2** ② |
| Three element, 14-pin quick disconnect (no CTs) | **MPL17C1** |
| Three element, 14-pin quick disconnect (with CTs) | **MPL17C2** ① |
| Three element, 14-pin quick disconnect (with CTs) | **MPL17C2** ② |
| Single element coil transformers (CTs) | **MPL30321** ① |
| Single element coil transformers (CTs) | **MPL30321** ② |
| Dual element coil transformers (CTs) | **MPL30322** ① |
| Dual element coil transformers (CTs) | **MPL30322** ② |
| Three element coil transformers (CTs) | **MPL30323** ① |
| Three element coil transformers (CTs) | **MPL30323** ② |
| Counter (large—old style) | **MPL3022** |
| Counter (small—new style) | **MPL3021** |
| **Hatteras Light (Marina) and Park Light (RV)** ③ | |
| Pedestal main housing | **MPL6002** |
| Copper busbar with nuts and washers | **MPL3468** |
| Complete busbar assembly | **MPL1108A** |
| Complete three-phase busbar assembly | **MPL1108FA** |
| 20 A GFCI external cover door | **MPL1101** |
| 30 A external cover door | **MPL1102** |
| 50 A external cover door | **MPL1105** |
| Light fuse | **MPL3026** |
| Fuse holder | **MPL3027** |
| Mounting feet (set of four) | **MPL7004** |

***Notes***

① Lighthouse, Lighthouse–SS, Powerhouse, Powerhouse–SS.
② Hatteras Light, Park Light, Newport Camp Mate, Newport Harbor Mate.
③ Please contact factory to determine configurations for replacement housing.

## Replacement Parts Catalog Numbers, continued

| Description | Catalog Number |
|---|---|
| **Newport Harbor Mate (Marina) and Camp Mate (RV)** | |
| Amber lens—three-piece | **MPL1117** |
| Clear lens—three-piece | **MPL1109** |
| Main housing | **MPL6000** |
| Main door | **MPL6001** |
| 30–30 A faceplate ① | **MPL1135** |
| 30–50 A faceplate ① | **MPL1136** |
| 50–50 A faceplate ① | **MPL1137** |
| 50 A–00 faceplate ① | **MPL1138** |
| 30 A–00 faceplate ① | **MPL1139** |
| 30–30 A faceplate assembly with breakers ① | **MPL1135A** |
| 30–30–20 GFI faceplate assembly ① | **MPL1135G/RV1135G** |
| 30–50 A faceplate assembly with breakers ① | **MPL1136A** |
| 30–50–20 GFI faceplate assembly ① | **MPL1136G/RV1136G** |
| 50–50 A faceplate assembly with breakers ① | **MPL1137A** |
| 50–50–20 GFI faceplate assembly ① | **MPL1137G/RV1137G** |
| 50 A–00 faceplate assembly with breakers ① | **MPL1138A** |
| 50–20 GFI faceplate assembly ① | **MPL1138G/RV1138G** |
| 30 A–00 faceplate assembly with breakers ① | **MPL1139A** |
| 30–20 GFI faceplate assembly ① | **MPL1139G/RV1139G** |
| Mounting brackets | **MPL7005** |
| 36-inch stainless steel stand | **MPL5506** |
| Copper busbar with nuts and washers | **MPL3468** |
| Complete busbar assembly | **MPL1108A** |
| Complete three-phase busbar assembly | **MPL1108FA** |
| **Firehouse (Marina and RV)** | |
| Red strobe light/siren | **MPL3020** |
| Firehouse top with lighting assembly and strobe | **MPLFH6003A** |
| Light fuse | **MPL3029** |
| Fuse holder | **MPL3028** |
| Door | **MPL6013** |
| 24-inch life ring | **MPL4201** |
| Life ring bracket | **MPL4201B** |
| Blank access panel | **MPL6015** |
| Door/life ring switch (pre-2004) | **MPL3030** |
| Door/life ring switch (new) | **MPL3050** |
| Door hasp | **MPL3950** |
| Busbar (double barrel terminal block) | **MPL3751** |
| 10-lb ABC Type fire extinguisher | **MPL8025** |
| 20-lb ABC Type fire extinguisher | **MPL8025X** |

***Note***

① For custom faceplates to include phone/cable or other accessories, please contact Eaton's Marina Power & Lighting facility at 1-800-723-8009.

## Dimensions

Approximate Dimensions in Inches (mm)

### Firehouse–SS

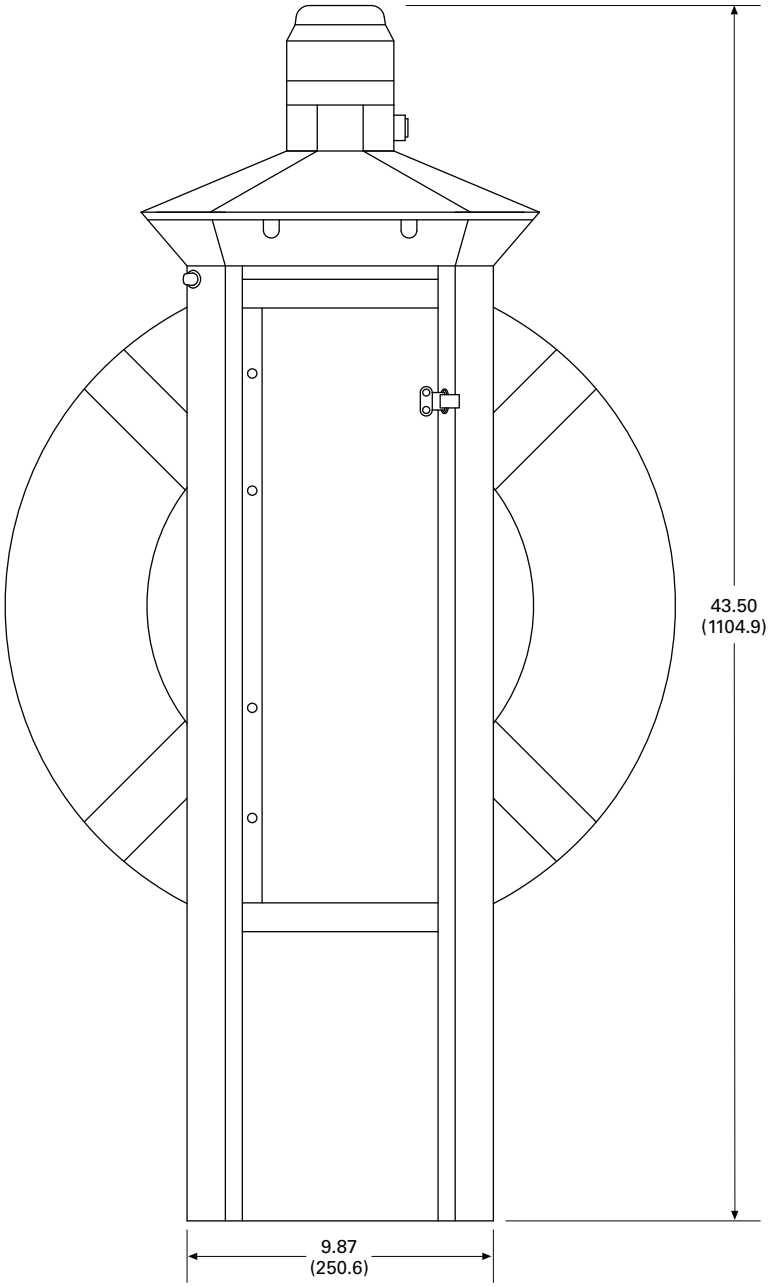

Smart Start

## Contents


| *Description* | *Page* |
|---|---|
| Power Pedestals | **V1-T5-51** |
| Lighthouse | **V1-T5-54** |
| Lighthouse–SS | **V1-T5-58** |
| Admiral–SS | **V1-T5-62** |
| Newport Harbor Mate | **V1-T5-65** |
| Hatteras Light | **V1-T5-69** |
| Firehouse | **V1-T5-73** |
| Smart Start | |
| Mariner | **V1-T5-80** |
| Digital Electronic Kilowatthour Meters | **V1-T5-81** |
| Distribution Equipment—Ground Fault Monitor | **V1-T5-82** |
| Distribution Equipment—Mega Yacht Powerpoint | **V1-T5-83** |
| Distribution Equipment—Substations | **V1-T5-86** |
| Distribution Equipment—Panels | **V1-T5-89** |
| Distribution Equipment—Transformers | **V1-T5-90** |




## Smart Start

### Product Description

If you have transient boat slips, Eaton Marina Power and Lighting has developed their newest product for your situation.

The new "Smart Start" pedestal is activated by the swipe of a credit card. A kiosk will be centrally located at the marina and will control up to 32 power pedestals. When a boater wants to use a slip, they will enter the slip number and amount of time they would like and will then be asked to swipe a card in order to activate the pedestal. Once the chosen time is up, the pedestal will shut down. No more free power!

The "Smart Start" pedestal will not only prevent transient boaters from stealing power, but it will also eliminate the need for 24-hour monitoring of the slips. Boaters will be able to come in at any time of the day and activate a pedestal.

### Features

- Lighted 316L stainless steel kiosk enclosure
- Programmable slip time blocks
- Programmable slip rates printable receipts

### Standards and Certifications

- UL listing pending

Listed

### Dimensions

Approximate Dimensions in Inches (mm)

**Smart Start**

| | |
|---|---|
| Height | 60.05 (1525.3) |
| Width | 14.15 (359.4) |
| Depth | 14.24 (361.9) |

**Marina Power and Lighting Equipment**

***Mariner***

## Contents


| *Description* | *Page* |
|---|---|
| Power Pedestals | **V1-T5-51** |
| Lighthouse | **V1-T5-54** |
| Lighthouse–SS | **V1-T5-58** |
| Admiral–SS | **V1-T5-62** |
| Newport Harbor Mate | **V1-T5-65** |
| Hatteras Light | **V1-T5-69** |
| Firehouse | **V1-T5-73** |
| Smart Start | **V1-T5-79** |
| Mariner | |
| Digital Electronic Kilowatthour Meters | **V1-T5-81** |
| Distribution Equipment—Ground Fault Monitor | **V1-T5-82** |
| Distribution Equipment—Mega Yacht Powerpoint | **V1-T5-83** |
| Distribution Equipment—Substations | **V1-T5-86** |
| Distribution Equipment—Panels | **V1-T5-89** |
| Distribution Equipment—Transformers | **V1-T5-90** |


## Mariner

### Product Description

The Mariner is a lighting bollard that can stand from 1.5 to 4 feet tall and can be used in various applications from marina docks, to landscaped areas, golf courses and beyond. The Mariner will have a lifetime warranty on the engineered resin housing that will withstand the harsh marine and land environments from Alaska to the tropics.

### Features

- Can be configured with a 7 watt, 9 watt or 13 watt fluorescent bulb
- Mounting base and painted pole supplied for desired height
- Limited lifetime warranty on engineered resin housing
- Custom colors available
- Side-mounted option

### Dimensions

Approximate Dimensions in Inches (mm)

**Mariner**

| | |
|---|---|
| 7 watt | 14.15 (359.4) |
| 9 watt/13 watt | 14.24 (361.9) |

**Mounting Base and Pole**

| |
|---|
| 1.5 feet–4 feet |

### Catalog Number Selection

**M 5 A R 18**

| Type |
|---|
| **M** = Mariner |

| Bulb Wattage |
|---|
| **5** = 5 W |
| **7** = 7 W |
| **9** = 9 W |
| **3** = 13 W |
| **1** = 50 MA LED |

| Color Lens |
|---|
| **A** = Amber |
| **C** = Clear |
| **S** = Special |

| Color |
|---|
| **W** = White |
| **R** = Blue |
| **B** = Black |
| **D** = Dark green |
| **S** = Special |

| Stand Height |
|---|
| **18** = 18-inch |
| **24** = 24-inch |
| **36** = 36-inch |
| **48** = 48-inch |

Digital Electronic Kilowatt Hour Meters

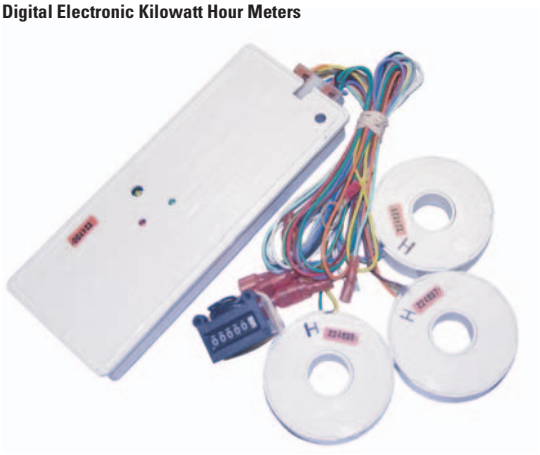

## Contents


| *Description* | *Page* |
|---|---|
| Power Pedestals | **V1-T5-51** |
| Lighthouse | **V1-T5-54** |
| Lighthouse–SS | **V1-T5-58** |
| Admiral–SS | **V1-T5-62** |
| Newport Harbor Mate | **V1-T5-65** |
| Hatteras Light | **V1-T5-69** |
| Firehouse | **V1-T5-73** |
| Smart Start | **V1-T5-79** |
| Mariner | **V1-T5-80** |
| Digital Electronic Kilowatthour Meters | |
| Distribution Equipment—Ground Fault Monitor | **V1-T5-82** |
| Distribution Equipment—Mega Yacht Powerpoint | **V1-T5-83** |
| Distribution Equipment—Substations | **V1-T5-86** |
| Distribution Equipment—Panels | **V1-T5-89** |
| Distribution Equipment—Transformers | **V1-T5-90** |




## Digital Electronic Kilowatthour Meters

### Product Description

Using the latest surface mount technology, Eaton manufactures a digital electronic kilowatthour meter that exceeds the +/– 2% accuracy required by ANSI (American National Standards Institute) C-12.1 and is approved by the state of California at +/– 1% over the full range of 0–100 A from a 0.5–1 power factor and is available for both single- and three-phase applications.

The meter drives an electro-mechanical counter that requires a 12 V pulse each tenth of a kilowatthour, providing 10 pulses per kilowatt used. The meter output can be hard wired or connected to a transmitter in the pedestal for wireless transmission to a receiver displaying the output on a PC for direct billing of up to 1,000 individual customers.

### Features

Our meter is designed to be user friendly in that all connections from external sources and the meter output are through one 14-pin locking connector. This feature eliminates many common problems, such as reverse line polarity and improper coil polarity. Simple LEDs, both red and green, indicate line and load condition and the pulsed LED indicates the rate of power consumption.

#### *Wireless System*

All of our meters are "wireless capable" to allow for wireless meter reading. This technology enables the marina or RV park to get meter readings from one central location rather than visiting every site to read the counters.

#### *Meter Socket Capabilities*

Meter sockets are available on the Lighthouse and Lighthouse–SS.

#### *Standard*

- Four jaw
- Ring-type
- 100 A

### Available Options

- 200 A (SS only)
- Lockable hasp
- Ringless (SS only)
- Five jaw
- Seven jaw (SS only)

### Product Selection

*One Element Meter*

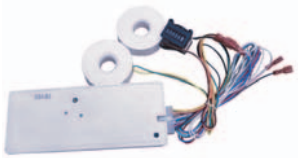

*Two Element Meter*

*Three Element Meter*

**Ground Fault Monitor**

## Contents


| *Description* | *Page* |
|---|---|
| Power Pedestals | **V1-T5-51** |
| Lighthouse | **V1-T5-54** |
| Lighthouse–SS | **V1-T5-58** |
| Admiral–SS | **V1-T5-62** |
| Newport Harbor Mate | **V1-T5-65** |
| Hatteras Light | **V1-T5-69** |
| Firehouse | **V1-T5-73** |
| Smart Start | **V1-T5-79** |
| Mariner | **V1-T5-80** |
| Digital Electronic Kilowatthour Meters | **V1-T5-81** |
| Distribution Equipment—Ground Fault Monitor | |
| Distribution Equipment—Mega Yacht Powerpoint | **V1-T5-83** |
| Distribution Equipment—Substations | **V1-T5-86** |
| Distribution Equipment—Panels | **V1-T5-89** |
| Distribution Equipment—Transformers | **V1-T5-90** |


## Distribution Equipment—Ground Fault Monitor

### Product Description

Our ground fault monitoring systems are designed to detect fault currents in the AC shore power system that are too low to trip a circuit breaker. The ground fault monitor helps reduce the risk of injury or property damage that may result from stray fault currents. Our ground fault monitoring system provides information to the maintenance staff on the overall condition of the AC electrical system. The ground fault monitoring system operates 24 hours a day and can be monitored by non-technical personnel.

### Features

- Adjustable trip level 10 mA to 10 A
- Current transformers up to 8 1/4-inch diameter
- Visual and/or audible alarm
- Housing of fiberglass or powder-coated stainless steel available

#### *Power Guard*

The ground fault monitor detects ground fault currents by means of current transformers (CT), which are placed around main or branch circuits. If a ground fault occurs, the CT will detect the amount of fault current and send a signal to the ground fault monitoring device where the amount of fault current is displayed with the faulty circuit identified. The detected fault can either activate an indicator alarm or disconnect the faulted circuit.

### Standards and Certifications

- UL listed current transformers

Listed

Marina Power and Lighting Equipment

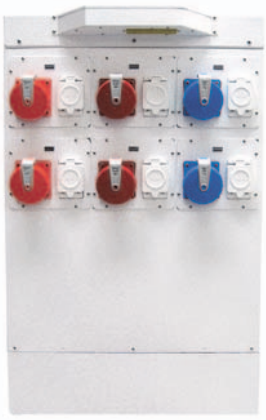

## Contents


| *Description* | *Page* |
|---|---|
| Power Pedestals | **V1-T5-51** |
| Lighthouse | **V1-T5-54** |
| Lighthouse–SS | **V1-T5-58** |
| Admiral–SS | **V1-T5-62** |
| Newport Harbor Mate | **V1-T5-65** |
| Hatteras Light | **V1-T5-69** |
| Firehouse | **V1-T5-73** |
| Smart Start | **V1-T5-79** |
| Mariner | **V1-T5-80** |
| Digital Electronic Kilowatthour Meters | **V1-T5-81** |
| Distribution Equipment—Ground Fault Monitor | **V1-T5-82** |
| Distribution Equipment—Mega Yacht Powerpoint | |
| Wiring Diagram | **V1-T5-84** |
| Dimensions | **V1-T5-85** |
| Distribution Equipment—Substations | **V1-T5-86** |
| Distribution Equipment—Panels | **V1-T5-89** |
| Distribution Equipment—Transformers | **V1-T5-90** |




## Distribution Equipment—Mega Yacht Powerpoint

### Product Description

From the company that is known for its high-quality innovations, Eaton is the only company to offer a self-contained dual-phase mega yacht unit. Made out of long-lasting stainless steel, this mega yacht unit has a copper-wound, low-noise transformer that is double insulated and epoxy overcoated.The mega yacht unit delivers both single-phase and three-phase power to serve most mega yachts. Helping to keep your marina environment tranquil, the mega yacht unit has a low-noise, highly efficient transformer that has isolation mounts to ensure a very quiet operation.

### Features

- Thermostatically controlled fans in transformer compartment for cooling
- Heavy stainless steel (316L) cabinet with a polyester powder coating
- Ventilated sun shields to help unit run cooler in tropical climates
- Limited lifetime warranty on housing
- Two or three light 13 watt photocell controlled fluorescent lights on the sun shield for optimal night lighting

### Available Options

- 200 A–480 V three-phase receptacles
- 100% rated breakers
- Hard wiring busbars for all voltages with breaker protection
- Two 3/4 inch water outlets with a water meter
- Two phone, two CATV and two CAT5 high-speed Internet connections
- Digital electronic meters on all receptacles
- Primary breaker
- Two 480 V delta or wye 125 A three-phase receptacles (IEC)
- Two 120/208 V 100 A three-phase receptacles (IEC)
- Two 120/240 V 100 A single-phase receptacles (IEC)
- Up to four 50 A 120/240 V locking receptacles (NEMA)
- Up to four 30 A 120 V locking receptacles (NEMA)
- Wireless remote metering for electric and water
- 20 A GFI receptacle
- Primary side 480 V maximum 600 A
- Secondary side single-phase 120/240 V maximum 100 kVA
- Secondary side three-phase 120/208 V maximum 125 kVA
- Fire extinguisher—10 or 20 lbs

## Wiring Diagram

### Powerpoint

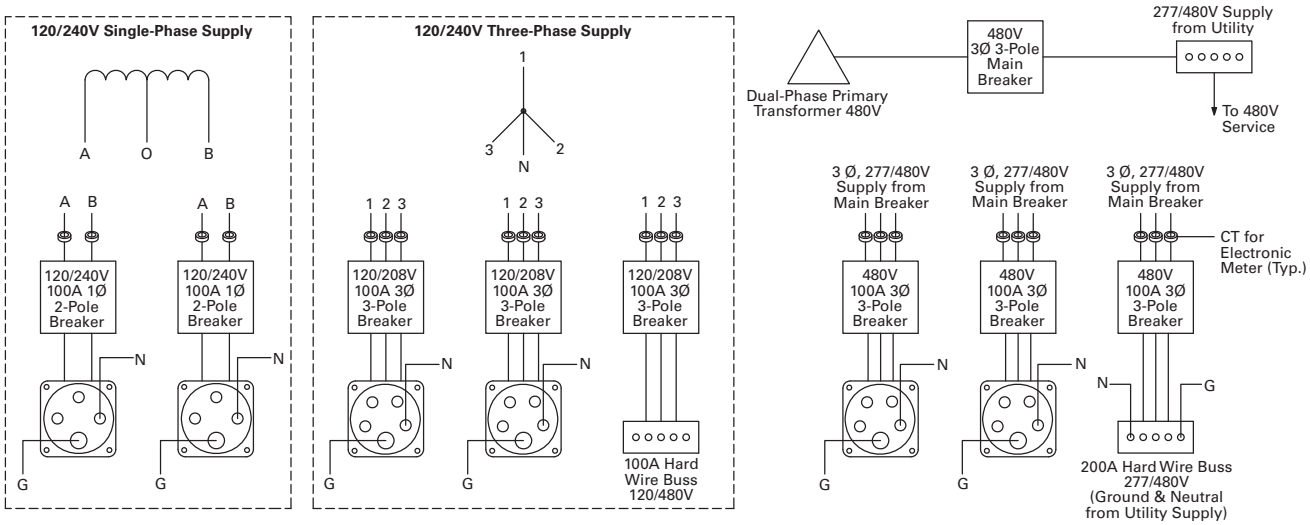

## Dimensions

Approximate Dimensions in Inches (mm)

### Powerpoint Unit

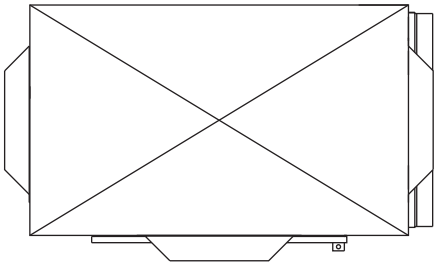

Top With Solar Shield

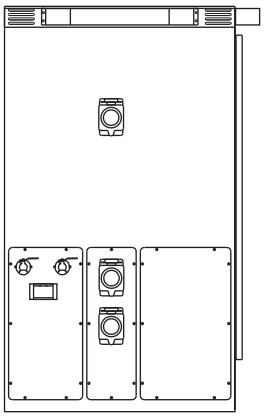

Left Side

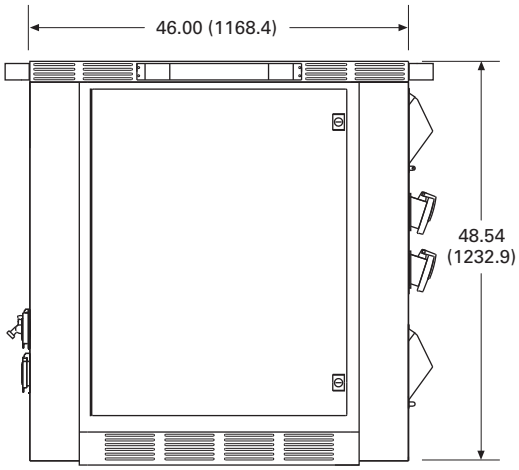


Front

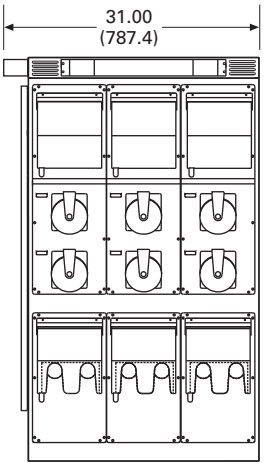


Right Side

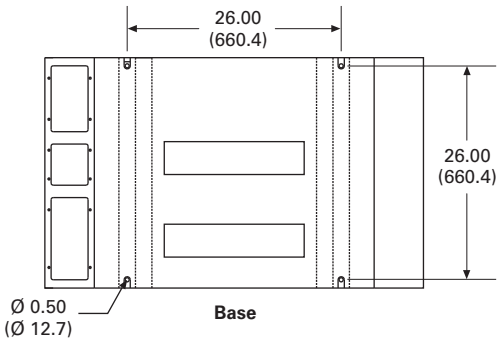


Base

**Substations**

*Double Panel Substation*

## Contents


| *Description* | *Page* |
|---|---|
| Power Pedestals | **V1-T5-51** |
| Lighthouse | **V1-T5-54** |
| Lighthouse–SS | **V1-T5-58** |
| Admiral–SS | **V1-T5-62** |
| Newport Harbor Mate | **V1-T5-65** |
| Hatteras Light | **V1-T5-69** |
| Firehouse | **V1-T5-73** |
| Smart Start | **V1-T5-79** |
| Mariner | **V1-T5-80** |
| Digital Electronic Kilowatthour Meters | **V1-T5-81** |
| Distribution Equipment—Ground Fault Monitor | **V1-T5-82** |
| Distribution Equipment—Mega Yacht Powerpoint | **V1-T5-83** |
| Distribution Equipment—Substations | |
| Features, Benefits and Functions | **V1-T5-87** |
| Available Options | **V1-T5-88** |
| Standards and Certifications | **V1-T5-88** |
| Dimensions | **V1-T5-88** |
| Distribution Equipment—Panels | **V1-T5-89** |
| Distribution Equipment—Transformers | **V1-T5-90** |


## Distribution Equipment—Substations

### Product Description

The introduction of substations into the marina and recreational vehicle market allows Eaton to be your complete marina and RV park electrical products supplier. We are able to assist in the design and layout of your marina or RV park electrical system from the primary service provider, to your power pedestal. Our substations are designed for any coastal or inland environment and are constructed of powder-coated stainless steel NEMA 3R housing cabinets. All substation cabinets come with our limited lifetime warranty. All of our substations use Eaton's panels and circuit breakers providing our customers the utmost in circuit protection and quality.

### Application Description

The aluminum and Galvaneal cabinets are recommended for inland applications. The substations can be configured with 50–330 kVA single-phase or three-phase copper wound transformers and up to 20 single-phase or 12 three-phase branch breakers. An optional three-sided double-wall cabinet is available that provides air flow between the panels. All substations come standard with temperature controlled cooling fans.

### Product Selection Guide

#### Panel and Transformer Combinations

| Panel | Transformer |
|---|---|
| **Single-Phase** | |
| 200 A | 50 kVA |
| 300 A | 75 kVA |
| 400 A | 100 kVA |
| 600 A | 150 kVA |
| 700 A | 167.5 kVA |
| 800 A | 200 kVA |
| 1000 A | 250 kVA |
| 1200 A | 330 kVA |
| **Three-Phase** | |
| 100 A | 45 kVA |
| 200 A | 75 kVA |
| 300 A | 112.5 kVA |
| 400 A | 150 kVA |
| 600 A | 225 kVA |
| 800 A | 300 kVA |

## Features, Benefits and Functions

- Limited lifetime warranty on the housing
- All stainless steel hardware
- Temperature controlled cooling fans in the transformer and circuit breaker compartments
- Lockable door

### *Ventilation*

The substation ventilation is designed to optimize air circulation over and around the transformers and through the panel compartment so that the substation operates at lower temperatures.

Substations come equipped with temperature controlled cooling fans for exhausting hot air from the cabinet and solar shield.

In addition, substations are available with a double-walled cabinet and solar shield, which allow for cooling of both the exterior surface of the cabinet and the internal components.

## Substations

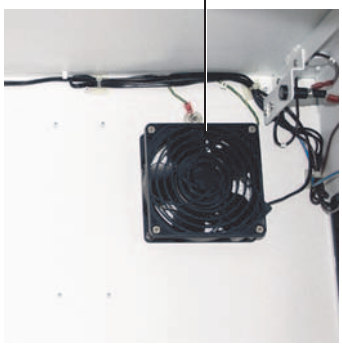


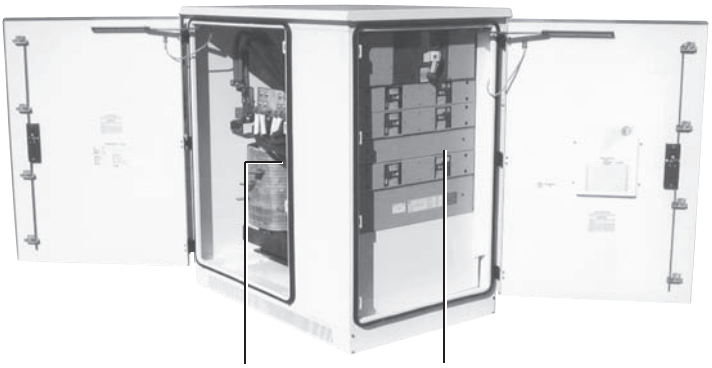


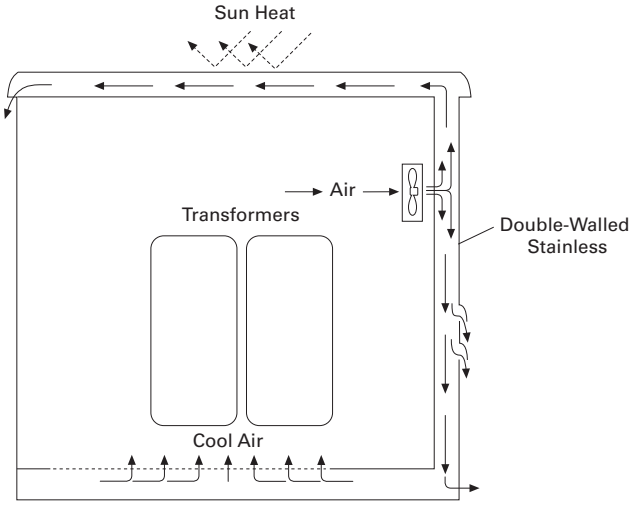


Double-Walled Construction

## Available Options

- Powder-coated cabinets made of stainless steel or fiberglass
- Limited lifetime warranty on housing. Transformer and secondary distribution panel in a single enclosure have a one-year limited warranty
- Stainless steel housing and hardware with locking doors
- Single-phase and three-phase models
- Overload capacity meets ANSI L57.96–01.250
- Optional double-walled construction
- Temperature controlled fans for cooling
- Custom-made copper wound single-phase or three-phase transformers from 50–330 kVA
- Up to 1200 A main circuit breaker with 15 single-phase branch circuit breakers or 10 three-phase branch circuit breakers
- Substations can be equipped with photocells to turn on and off lights
- A 20 A GFI can be installed in the cabinet, as well as a ground fault monitoring system

## Standards and Certifications

- cULus listed

C UL US
Listed

## Dimensions

Approximate Dimensions in Inches (mm)

**Substations**

| | |
|---|---|
| **Standard Substation** | |
| Height | 53.00 (1346.2) |
| Width | 51.00 (1295.4) |
| Depth | 33.00 (838.2) |
| **Side-by-Side Substation** | |
| Height | 53.00 (1346.2) |
| Width | 66.00 (1676.4) |
| Depth | 30.00 (762.0) |
| **Double Panel Substation** | |
| Height | 53.00 (1346.2) |
| Width | 63.00 (1600.2) |
| Depth | 33.00 (838.2) |

Panels

*Panel (Stainless Steel Shown)*

## Contents


| *Description* | *Page* |
|---|---|
| Power Pedestals | **V1-T5-51** |
| Lighthouse | **V1-T5-54** |
| Lighthouse–SS | **V1-T5-58** |
| Admiral–SS | **V1-T5-62** |
| Newport Harbor Mate | **V1-T5-65** |
| Hatteras Light | **V1-T5-69** |
| Firehouse | **V1-T5-73** |
| Smart Start | **V1-T5-79** |
| Mariner | **V1-T5-80** |
| Digital Electronic Kilowatthour Meters | **V1-T5-81** |
| Distribution Equipment—Ground Fault Monitor | **V1-T5-82** |
| Distribution Equipment—Mega Yacht Powerpoint | **V1-T5-83** |
| Distribution Equipment—Substations | **V1-T5-86** |
| Distribution Equipment—Panels | |
| Distribution Equipment—Transformers | **V1-T5-90** |




## Distribution Equipment—Panels

### Product Description

Two of the many products we can offer our customers are Eaton's PRL-3A and PRL-4 panels as standalone units or in one of our substations. All of our busses are made of copper and are load rated; breakers are bolt-on type. Distribution panels can be 120/240 V single-phase, 120/208 V three-phase, 277/480 V three-phase or 220Y/127 V three-phase based on your system requirements. Distribution panels can also have a main breaker or a main lug. Branch circuit breakers are provided based on customer requirements.

### Features

- All internal wiring is fine stranded 1000 V insulated copper
- Copper busbars
- All exterior hardware is stainless steel

### Available Options

- NEMA 3R or 4X
- Powder-coated stainless steel
- Main breaker up to 1200 A
- Branch breaker 20–1200 A
- Main lug only
- We also offer 480 V models—single-phase and three-phase

***Single-Phase***

- Up to 1200 A main circuit breakers
- Up to 42 branch circuit breakers

***Three-Phase***

- Up to 1200 A main circuit breakers
- Up to 42 branch circuit breakers

### Standards and Certifications

- UL listed
- cULus listed

UL Listed c UL Listed US

Transformers

*Three-Phase Transformer*

## Contents


| *Description* | *Page* |
|---|---|
| Power Pedestals | **V1-T5-51** |
| Lighthouse | **V1-T5-54** |
| Lighthouse–SS | **V1-T5-58** |
| Admiral–SS | **V1-T5-62** |
| Newport Harbor Mate | **V1-T5-65** |
| Hatteras Light | **V1-T5-69** |
| Firehouse | **V1-T5-73** |
| Smart Start | **V1-T5-79** |
| Mariner | **V1-T5-80** |
| Digital Electronic Kilowatthour Meters | **V1-T5-81** |
| Distribution Equipment—Ground Fault Monitor | **V1-T5-82** |
| Distribution Equipment—Mega Yacht Powerpoint | **V1-T5-83** |
| Distribution Equipment—Substations | **V1-T5-86** |
| Distribution Equipment—Panels | **V1-T5-89** |
| Distribution Equipment—Transformers | |


## Distribution Equipment—Transformers

### Product Description

Because of the high humidity and corrosive conditions of coastal environments, our transformers are wound with Class H heavily insulated copper bar and are double dipped in tough insulating varnish that protects the copper, as well as reduces the hum that is typical in a transformer that is not double dipped. We provide a second overcoat of high temperature epoxy to protect against the severe saltwater environment. We can provide this transformer in single-phase, from 50 to 500 kVA, and three-phase, from 45 to 300 kVA.

### Features

- Copper wound transformer coils double dipped in high temperature baking varnish
- All internal wiring is fine stranded 2000 V insulated copper
- Copper busbars
- Marine transformers with epoxy overcoat
- All copper-to-copper connections

### Available Options

- Single-phase: 50–500 kVA
- Three-phase: 45–300 kVA
- Epoxy overcoat for non-marine applications

***Primary Voltages***

- 480 wye three-phase
- 480 V three-phase delta three-wire + ground
- 480 V single-phase two-wire + ground

***Secondary Voltages***

- 127/220 V three-phase wye four-wire
- 120/208 V three-phase wye four-wire
- 120/240 V single-phase three-wire

***Marina Power Distribution Transformer kVA Availabilities***

- Single-phase: 50, 75, 100, 150, 167.5, 200, 250, 330, 500 kVA
- Three-phase: 45, 75, 112.5, 150, 225, 300 kVA

### Standards and Certifications

- cULus listed

c UL us Listed

Air Conditioning Disconnects

## 6.1 Air Conditioning Disconnects


Product Description . . . . . V1-T6-2
Application Description . . . . . V1-T6-2
Features, Benefits and Functions . . . . . V1-T6-3
Standards and Certifications . . . . . V1-T6-3
Product Selection . . . . . V1-T6-4
Cross-Reference . . . . . V1-T6-6
Technical Data and Specifications . . . . . V1-T6-7
Dimensions . . . . . V1-T6-7




Learn Online

# Air Conditioning Disconnects

Fused, Unfused and Molded Case Switch

*Complete Line of Fused, Unfused and Molded Case Switch Type Air Conditioning Disconnects*

## Contents


| *Description* | *Page* |
|---|---|
| Features, Benefits and Functions | **V1-T6-3** |
| Standards and Certifications | **V1-T6-3** |
| Product Selection | **V1-T6-4** |
| Cross-Reference | **V1-T6-6** |
| Technical Data and Specifications | **V1-T6-7** |
| Dimensions | **V1-T6-7** |




## Product Description

An air conditioning disconnect (ACD) is a disconnect located between a loadcenter (distribution panel) and air conditioner. Eaton's ACD product line provides an installer or repair personnel with a visible disconnecting means when performing maintenance. ACDs are also known as disconnects, pullouts or air conditioning switches.

Non-fused pullout and molded case switch devices provide personnel with a visible ON-OFF disconnecting means. While fused pullout units also perform this function, they also provide an additional level of protection for the air conditioner.

Fused and non-fused devices are of a pullout design, where the user physically removes or "pulls out" a tab to break the electrical connection. A molded case switch is similar to a light switch where the user "switches" the unit to the indicated ON-OFF position.

### Fused and Non-Fused Pullouts

- ON/OFF control provided by a pullout handle
- Pullout handle can be conveniently stored in the compartment in the OFF position, helping to prevent the handle from being misplaced
- Protective shield cannot be removed until the pullout handle is removed, disconnecting the power

### Molded Case Switch

- Rugged molded case construction in a disconnect switch that looks like a circuit breaker but operates like an ordinary household light switch
- Plug-in molded case switch (included) eliminates the need for pullout handles
- No need for replacement pullout handles due to loss or theft

## Application Description

The most widely used application for ACDs is for residential and light commercial air conditioning units. An ACD is installed outdoors, in visible proximity to the air conditioner condensing unit. ACDs are also found in use with heat pumps, swimming pools, spas, whirlpools and pump houses, and meet 2008 NEC Article 422.31 (B) requirements for servicing electric water heaters. Metallic enclosures are galvanized steel and are installed in various locations. Non-metallic enclosures are a plastic (polycarbonate) enclosure commonly used in coastal or salt-water areas.

## Features, Benefits and Functions

- Single-phase, two-wire, 240 Vac and three-phase, three-wire, 240 Vac
- NEMA 3R outdoor enclosures offered in metallic and non-metallic versions
- Easy-to-remove high-strength protective shield for easier wiring and mounting
- Easy-to-remove front cover (no screws or fasteners to remove)
- 1-inch knockouts on the bottom, back and side of unit
- Copper-rated line and load lugs that are easily accessible
- Ample wiring space for mounting with a stud gun (single keyhole, two- or three-point mounting)
- Fused devices are service entrance rated

**Note:** Fused non-metallic units require the addition of **GB4NM** ground bar to obtain a Service Entrance rating.

- Horsepower rated (10 hp maximum at 240 Vac)
- Padlockable door provision for safety and reduction of tampering
- Metallic enclosures are bottom entry and exit only
- Non-metallic enclosures have knockouts and a hub provision for top access
- Non-metallic enclosures have a single unit door and protective shield for installer convenience
- Non-metallic enclosures are durable and provide excellent resistance to climate changes
- Factory-installed tamper-resistant/weather-resistant receptacles are available as an option on some products

## Standards and Certifications

- UL listed File No. E132354, E143893, E196365

Contact Eaton for details and part numbers for CSA approved units.

## Product Selection

DPU222R

### Non-Fused Pullouts

| Main Ampere Rating | Maximum hp Rating 120 V | 240 V | Wire Size Range Cu/Al 60 °C or 75 °C | Catalog Number |
|---|---|---|---|---|
| **Galvanized Steel** | | | | |
| 60 | — | 10 | #14–3 | **DPU222R** ① |
| **Non-Metallic/Polycarbonate Enclosure** | | | | |
| 60 | — | 10 | #14–2 | **ACD222URNM-A2** ① |

DPF222R

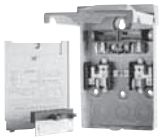

### Fused Pullouts

| Main Ampere Rating | Maximum hp Rating 120 V | 240 V | Wire Size Range Cu/Al 60 °C or 75 °C | Catalog Number |
|---|---|---|---|---|
| **Galvanized Steel** | | | | |
| 30 ② | 2 | 3 | #14–3 | **DPF221R** ① |
| 60 ② | 3 | 10 | #14–3 | **DPF222R** ① |
| **Non-Metallic** | | | | |
| 30 | 2 | 3 | #14–2 | **ACD221RNM-A2** ① |
| 60 | 3 | 10 | #14–2 | **ACD222RNM-A2** ① |

For Service Entrance applications, see footnotes below.

DPB222R

### Molded Case Switch

| Main Ampere Rating | Maximum hp Rating 120 V | 240 V | Wire Size Range Cu/Al 60 °C or 75 °C | Catalog Number |
|---|---|---|---|---|
| **Galvanized Steel** | | | | |
| 60 | — | 10 | #14–3 | **DPB222R** ③ |
| **Non-Metallic/Polycarbonate Enclosure** | | | | |
| 60 | — | 10 | #14–2 | **B60NARNM-A2** ③ |

***Notes***

① For replacement pullout head, order part number **96-3258-4**.
② To obtain a Service Entrance Rating, the addition of a **DPFG** (ground bar kit) is required.
③ For replacement molded case switch, order part number **BR260NA**.

DPU222RGF20

## ACD with 20 Ampere Ground Fault Receptacle ①

| Main Ampere Rating | Maximum hp Rating 120 V | 240 V | Wire Size Range Cu/Al 60 °C or 75 °C | Catalog Number |
|---|---|---|---|---|
| **Non-Fused Pullouts** | | | | |
| 60 | — | 10 | #14–3 | **DPU222RGF20WRTR** ② |
| 60 | — | 10 | #14–3 | **DPU222RGF20** |
| **Fused Pullouts** | | | | |
| 30 | 2 | 3 | #14–3 | **DPF221RGF20WRTR** ② |
| 30 | 2 | 3 | #14–3 | **DPF221RGF20** |
| 60 | 3 | 10 | #14–3 | **DPF222RGF20WRTR** ② |
| 60 | 3 | 10 | #14–3 | **DPF222RGF20** |

DPU222RGF15

## ACD with 15 Ampere Ground Fault Receptacle ①③

| Main Ampere Rating | Maximum hp Rating 120 V | 240 V | Wire Size Range Cu/Al 60 °C or 75 °C | Catalog Number |
|---|---|---|---|---|
| **Non-Fused Pullouts** | | | | |
| 60 | — | 10 | #14–3 | **DPU222RGF15** |
| 60 | — | 10 | #14–3 | **DPU222RGF15WRTR** ② |
| **Fused Pullouts** | | | | |
| 30 | 2 | 3 | #14–3 | **DPF221RGF15** |
| 30 | 2 | 3 | #14–3 | **DPF221RGF15WRTR** ② |
| 60 | 3 | 10 | #14–3 | **DPF222RGF15** |
| 60 | 3 | 10 | #14–3 | **DPF222RGF15WRTR** ② |

***Notes***

① Factory-installed GFCI receptacle.
② Includes weather-resistant/tamper-resistant receptacles to meet 2008 NEC Article 406.8 (A) and 406.11 requirements.
③ NEC permits the maximum receptacle rating of a 15 A circuit to be 15 A.

DPU362A

### Three-Phase Non-Fused ACD

| Main Ampere Rating | Maximum hp Rating 240 V | 480 V | Wire Size Range Cu 75 °C | Catalog Number |
|---|---|---|---|---|
| 60 | 15 | 30 | #14–4 | **DPU362RA** |



## Cross-Reference

### Cross-Reference

| Description | Catalog Number Eaton | Square D® | GE® | Siemens® (Murray®) | Milbank | Midwest |
|---|---|---|---|---|---|---|
| **Metallic/Galvanized Steel Enclosure** | | | | | | |
| 30 A fused | **DPF221R** | — | TF30R | WF2030 | U3830 | U035F2 |
| 60 A fused | **DPF222R** | — | TF60R | WF2060 | U3860 | U065F1 |
| 60 A non-fused | **DPU222R** | — | TFN60R | — | U3800 | U065P010 |
| 60 A non-fused compact design | **DPU222R** | — | — | WNFC2060 | — | — |
| 60 A molded case switch | **DPB222R** | QO200TR | TNA60R1 | WNAS2060 | — | U065NA1 |
| 60 A non-fused with ground fault receptacle | **DPU222RGF** | — | TFN60RGFR | WN2060GFCI | U3822-20GR | U065P010 |
| 30 A fused with ground fault receptacle | **DPF221RGF** | — | — | WF2030GFCI | — | U035F010 |
| 60 A fused with ground fault receptacle | **DPF222RGF** | — | — | WF2060GFCI | — | U065F010 |
| 60 A non-fused with 1/2-inch wire harness | **DPU222R12W** ① | — | — | — | — | — |
| 60 A non-fused with 3/4-inch wire harness | **DPU222R34W** ① | — | — | — | — | — |
| 60 A three-phase 600 V molded case switch | **DPU362RA** | — | — | — | — | U0653F |
| **Non-Metallic/Polycarbonate Enclosure** | | | | | | |
| 30 A fused | **ACD221RNM-A2** | — | TPF30R | WF2030PL | — | P035F |
| 60 A fused | **ACD222RNM-A2** | — | TPF60R | WF2060PL | — | P065F |
| 60 A non-fused | **ACD222URNM-A2** | — | TPN60R1 | WN2060PL | — | P065P1 |
| 60 A molded case switch | **B60NARNM-A2** | QO200TRNM | TPNA60R1 | WNAS2060PL | — | P065NA1 |
| 30 A fused with 15 A ground fault receptacle | **DPF221RGF15WRTR** | — | — | — | — | — |
| 30 A fused with 20 A ground fault receptacle | **DPF221RGF20WRTR** | — | — | — | — | — |
| 60 A fused with 15 A ground fault receptacle | **DPF222RGF15WRTR** | — | — | — | — | — |
| 60 A fused with 20 A ground fault receptacle | **DPF222RGF20WRTR** | — | — | — | — | — |
| 60 A non-fused with 15 A ground fault receptacle | **DPU222RGF15WRTR** | — | — | — | — | — |
| 60 A non-fused with 20 A ground fault receptacle | **DPU222RGF20WRTR** | — | — | — | U3822-20GWR | — |

***Note***

① Eaton Quick Pro℠ designated item.

## Technical Data and Specifications

- 10,000 amperes rms symmetrical interrupting rating
- Horsepower rated
- Fusible and non-fusible pullout and molded case switch designs
- 30 and 60 amperes available in fusible
- 60 amperes available in non-fusible and molded case switch
- Class H fuse clips provided on fusible pullout design
- WRTR (weather-resistant/ tamper-resistant) receptacle options available



## Dimensions

Approximate Dimensions in Inches (mm)

### Dimensions and Shipping Carton Information

| Catalog Number | Carton Quantity | Dimensions in Inches (mm) Height | Width | Depth | Weight Lbs (kg) |
|---|---|---|---|---|---|
| **Metallic/Galvanized Steel Enclosure** | | | | | |
| **DPF221R** | 10 | 8.70 (220.9) | 5.40 (137.2) | 3.15 (80.0) | 27 (12) |
| **DPF222R** | 10 | 8.70 (220.9) | 5.40 (137.2) | 3.15 (80.0) | 27 (12) |
| **DPU222R** | 10 | 8.70 (220.9) | 5.40 (137.2) | 3.15 (80.0) | 27 (12) |
| **DPB222R** | 10 | 8.60 (218.4) | 5.30 (134.6) | 3.74 (95.0) | 34 (15) |
| **DPU222R12W** ① | 1 | 14.75 (374.6) | 12.50 (317.5) | 4.00 (101.6) | 6 (3) |
| **DPU222R34W** ① | 1 | 14.75 (374.6) | 12.50 (317.5) | 4.00 (101.7) | 6 (3) |
| **DPU222RGF20** | 1 | 13.00 (330.2) | 7.50 (190.5) | 4.75 (120.7) | 8 (4) |
| **DPF221RGF20** | 1 | 13.00 (330.2) | 7.50 (190.5) | 4.75 (120.7) | 8 (4) |
| **DPF222RGF20** | 1 | 13.00 (330.2) | 7.50 (190.5) | 4.75 (120.7) | 8 (4) |
| **DPU222RGF15** | 1 | 13.00 (330.2) | 7.50 (190.5) | 4.75 (120.7) | 8 (4) |
| **DPF221RGF15** | 1 | 13.00 (330.2) | 7.50 (190.5) | 4.75 (120.7) | 8 (4) |
| **DPF222RGF15** | 1 | 13.00 (330.2) | 7.50 (190.5) | 4.75 (120.7) | 8 (4) |
| **DPF221RGF15WRTR** | 1 | 13.00 (330.2) | 7.50 (190.5) | 4.75 (120.7) | 8 (4) |
| **DPF221RGF20WRTR** | 1 | 13.00 (330.2) | 7.50 (190.5) | 4.75 (120.7) | 8 (4) |
| **DPF222RGF15WRTR** | 1 | 13.00 (330.2) | 7.50 (190.5) | 4.75 (120.7) | 8 (4) |
| **DPF222RGF20WRTR** | 1 | 13.00 (330.2) | 7.50 (190.5) | 4.75 (120.7) | 8 (4) |
| **DPU222RGF15WRTR** | 1 | 13.00 (330.2) | 7.50 (190.5) | 4.75 (120.7) | 8 (4) |
| **DPU222RGF20WRTR** | 1 | 13.00 (330.2) | 7.50 (190.5) | 4.75 (120.7) | 8 (4) |
| **DPU362R** | 1 | 8.60 (218.4) | 5.30 (134.6) | 3.74 (94.9) | 4 (2) |
| **Non-Metallic/Polycarbonate Enclosure** | | | | | |
| **ACD221RNM-A2** | 10 | 8.63 (219.0) | 6.26 (159.0) | 4.33 (109.9) | 15 (7) |
| **ACD222RNM-A2** | 10 | 8.63 (219.0) | 6.26 (159.0) | 4.33 (109.9) | 15 (7) |
| **ACD222URNM-A2** | 10 | 8.63 (219.0) | 6.26 (159.0) | 4.33 (109.9) | 15 (7) |
| **B60NARNM-A2** | 10 | 8.63 (219.0) | 6.26 (159.0) | 4.33 (109.9) | 18 (8) |

***Note***

① Eaton Quick Pro designated item.

Approximate Dimensions in Inches (mm)

### DPF221R, DPF222R, DPU222R, DPU222R12W and DPU222R34W

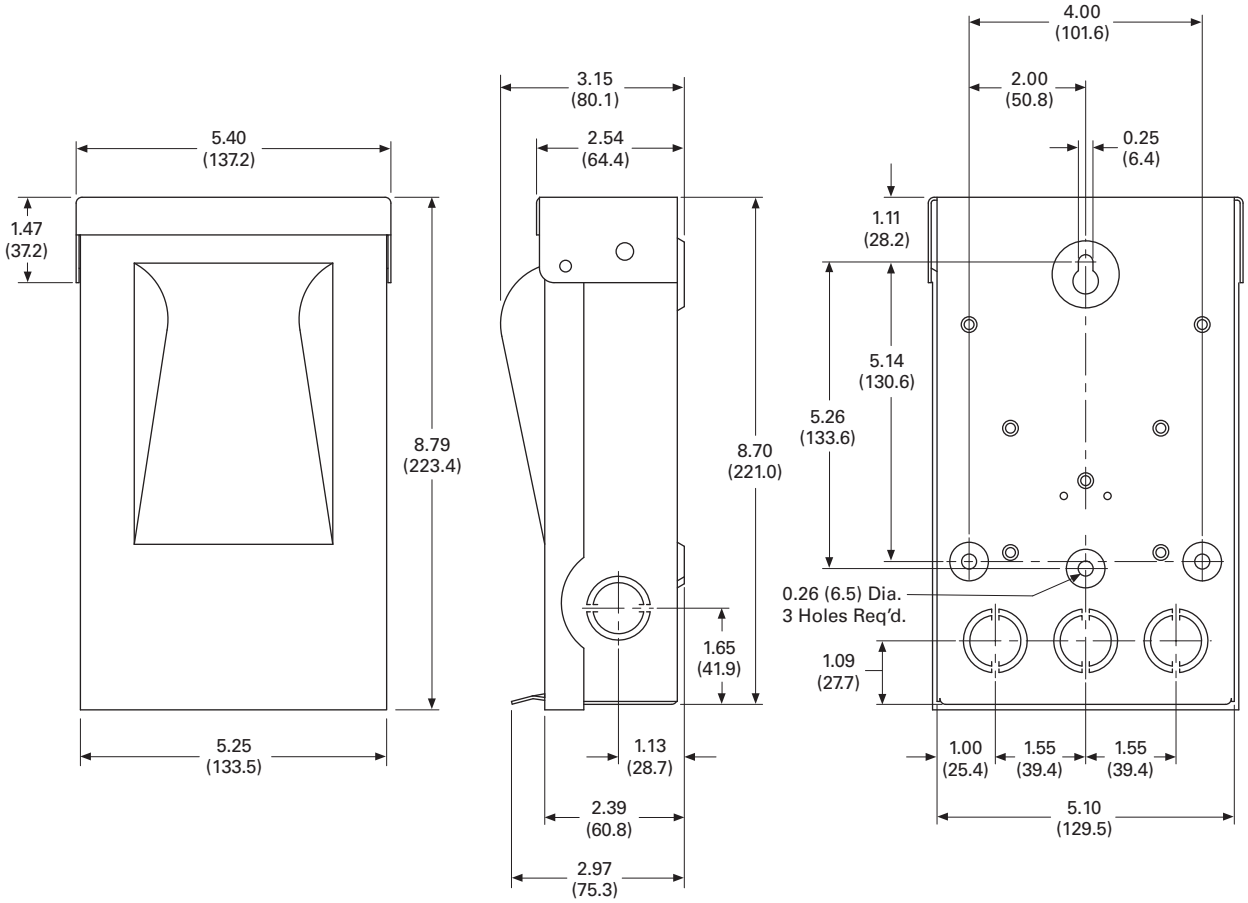


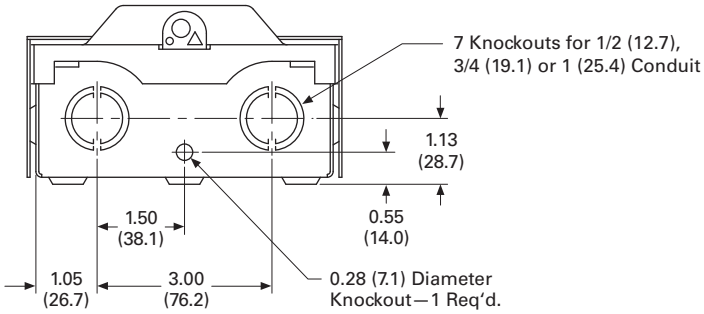

Approximate Dimensions in Inches (mm)

### ACD221RNM-A2, ACD222RNM-A2, ACD222URNM-A2 and B60NARNM-A2

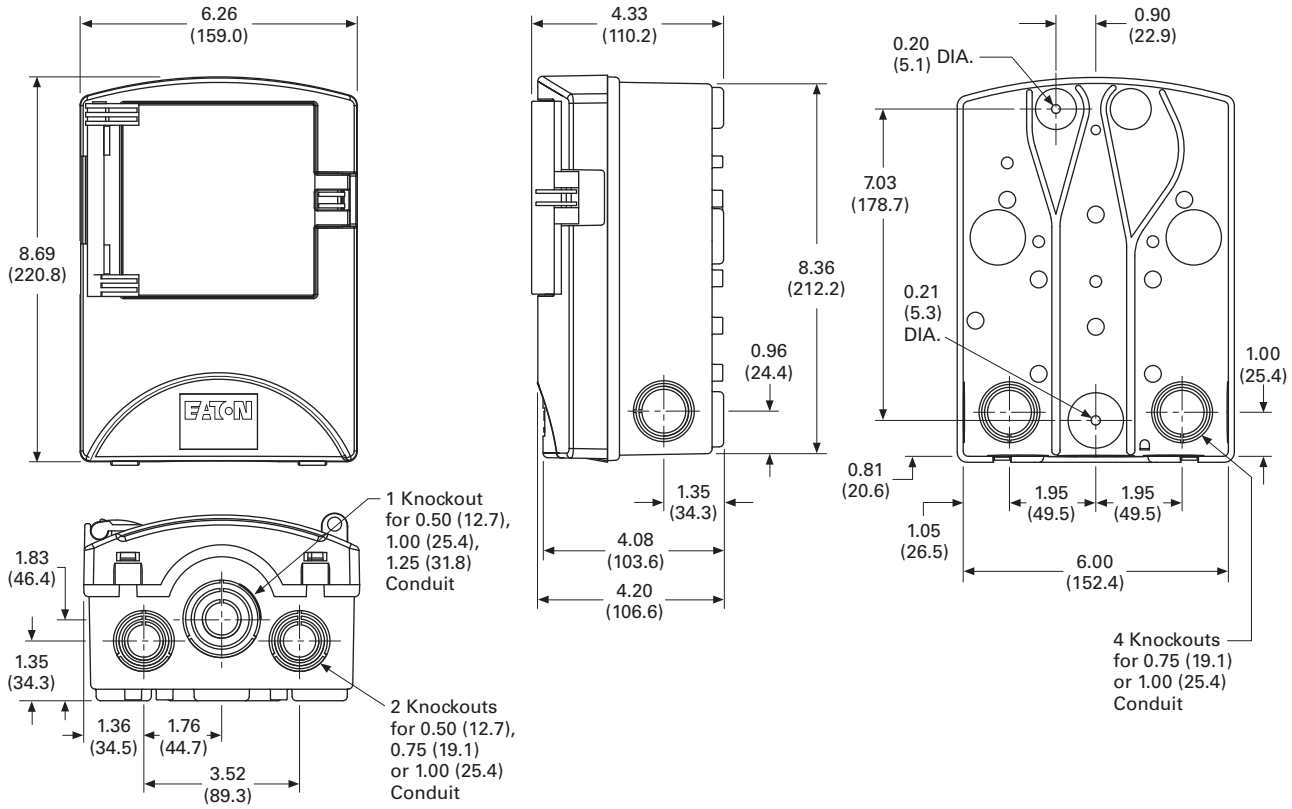


### DPB222R and DPU362A

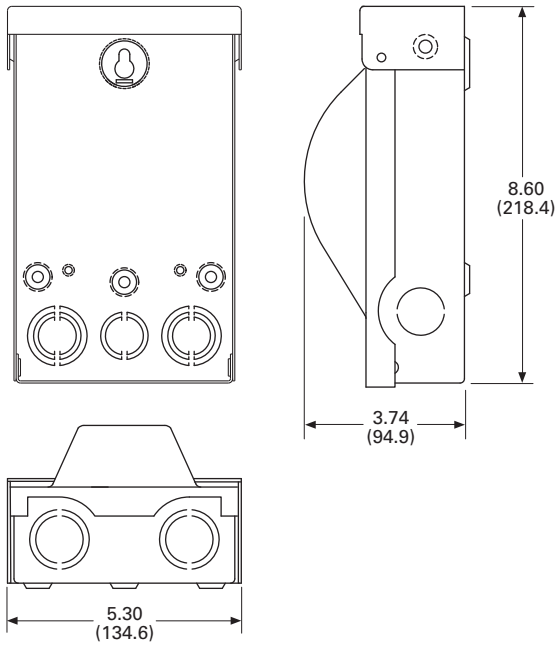

Approximate Dimensions in Inches (mm)

**DPU222RGF20, DPF221RGF20, DPF222RGF20, DPU222RGF15, DPF221RGF15, DPF222RGF15, DPF221RGF15WRTR, DPF221RGF20WRTR, DPF222RGF15WRTR, DPF222RGF20WRTR, DPU222RGF15WRTR and DPU222RGF20WRTR**

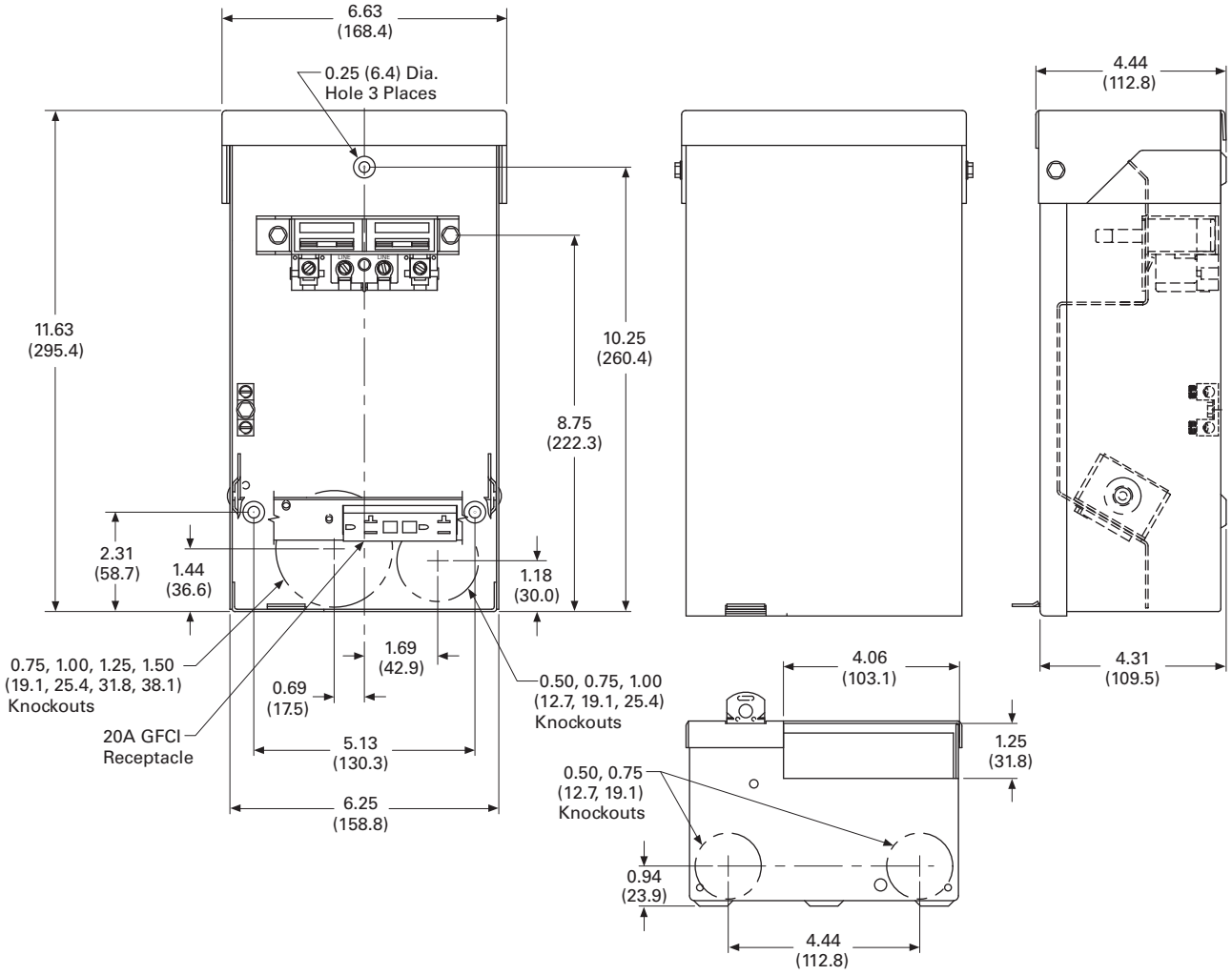

Effective Date: November 1, 2008

Eaton Terms & Conditions

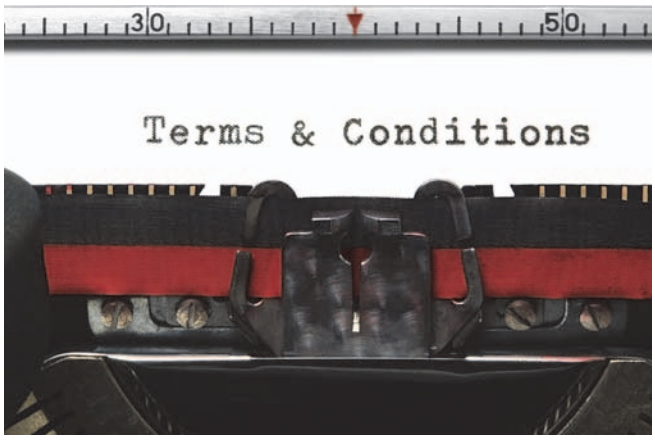


## Contents


| *Description* | *Page* |
|---|---|
| Terms and Conditions of Sale | **V1-A1-1** |
| Terms of Payment | **V1-A1-2** |
| Freight | **V1-A1-3** |
| Warranty | **V1-A1-3** |


## Selling Policy (Supersedes Selling Policy 25-000, dated February 20, 2006)

### Terms and Conditions of Sale

The Terms and Conditions of Sale set forth herein, and any supplements which may be attached hereto, constitute the full and final expression of the contract for the sale of products or services (hereinafter referred to as Product(s) or Services by Eaton Corporation (hereinafter referred to as Seller) to the Buyer, and supersedes all prior quotations, purchase orders, correspondence or communications whether written or oral between the Seller and the Buyer. Notwithstanding any contrary language in the Buyer's purchase order, correspondence or other form of acknowledgment, Buyer shall be bound by these Terms and Conditions of Sale when it sends a purchase order or otherwise indicates acceptance of this contract, or when it accepts delivery from Seller of the Products or Services.

THE CONTRACT FOR SALE OF THE PRODUCTS OR SERVICES IS EXPRESSLY LIMITED TO THE TERMS AND CONDITIONS OF SALE STATED HEREIN. ANY ADDITIONAL OR DIFFERENT TERMS PROPOSED BY BUYER ARE REJECTED UNLESS EXPRESSLY AGREED TO IN WRITING BY SELLER. No contract shall exist except as herein provided.

#### *Complete Agreement*

No amendment or modification hereto nor any statement, representation or warranty not contained herein shall be binding on the Seller unless made in writing by an authorized representative of the Seller. Prior dealings, usage of the trade or a course of performance shall not be relevant to determine the meaning of this contract even though the accepting or acquiescing party had knowledge of the nature of the performance and opportunity for objection.

#### *Quotations*

Written quotations are valid for 30 days from its date unless otherwise stated in the quotation or terminated sooner by notice.

Verbal quotations, unless accepted, expire the same day they are made.

A complete signed order must be received by Seller within 20 calendar days of notification of award, otherwise the price and shipment will be subject to re-negotiation.

#### *Termination and Cancellation*

Any order may be terminated by the Buyer only by written notice and upon payment of reasonable termination charges, including all costs plus profit.

Seller shall have the right to cancel any order at any time by written notice if Buyer breaches any of the terms hereof, becomes the subject of any proceeding under state or federal law for the relief of debtors, or otherwise becomes insolvent or bankrupt, generally does not pay its debts as they become due or makes an assignment for the benefit of creditors.

# Appendix 1—Eaton Terms & Conditions

Effective Date: November 1, 2008

***Prices***

All prices are subject to change without notice. In the event of a price change, the effective date of the change will be the date of the new price or discount sheet, letter or telegram. All quotations made or orders accepted after the effective date will be on the new basis. For existing orders, the price of the unshipped portion of an order will be the price in effect at time of shipment.

***Price Policy—Products and Services***

When prices are quoted as firm for quoted shipment, they are firm provided the following conditions are met:

1. The order is released with complete engineering details.
2. Shipment of Products are made, and Services purchased are provided within the quoted lead time.
3. When drawings for approval are required for any Products, the drawings applicable to those Products must be returned within 30* calendar days from the date of the original mailing of the drawings by Seller. The return drawings must be released for manufacture and shipment and must be marked "APPROVED" or "APPROVED AS NOTED." Drawing re-submittals which are required for any other reason than to correct Seller errors will not extend the 30-day period.

   * 60 days for orders through contractors to allow time for their review and approval before and after transmitting them to their customers.

If the Buyer initiates or in any way causes delays in shipment, provision of Services or return of approval drawings beyond the periods stated above, the price of the Products or Services will be increased 1% per month or fraction thereof up to a maximum of 18 months from the date of the Buyer's order. For delays resulting in shipment or provision of Services beyond 18 months from the date of the Buyer's order, the price must be renegotiated.

***Price Policy—BLS***

Refer to Price Policy 25-050.

***Minimum Billing***

Orders less than $1,000 will be assessed a shipping and handling charge of 5% of the price of the order, with a minimum charge of $25.00 unless noted differently on Product discount sheets.

***Taxes***

The price does not include any taxes. Buyer shall be responsible for the payment of all taxes applicable to, or arising from the transaction, the Products, its sale, value, or use, or any Services performed in connection therewith regardless of the person or entity actually taxed.

## Terms of Payment

***Products***

Acceptance of all orders is subject to the Buyer meeting Seller's credit requirements. Terms of payment are subject to change for failure to meet such requirements. Seller reserves the right at any time to demand full or partial payment before proceeding with a contract of sale as a result of changes in the financial condition of the Buyer. Terms of Payment are either Net 30 days from the date of invoice of each shipment or carry a cash discount based on Product type. Specific payment terms for Products are outlined in the applicable Product discount schedules.

***Services***

Terms of payment are net within 30 days from date of invoice for orders amounting to less than $50,000.00.

Terms of payment for orders exceeding $50,000.00 shall be made according to the following:

1. Twenty percent (20%) of order value with the purchase order payable 30 days from date of invoice.
2. Eighty percent (80%) of order value in equal monthly payments over the performance period payable 30 days from date of invoice.

Except for work performed (i) under a firm fixed price basis or (ii) pursuant to terms of a previously priced existing contract between Seller and Buyer, invoices for work performed by Seller shall have added and noted on each invoice a charge of 3% (over and above the price of the work) which is related to Seller compliance with present and proposed environmental, health, and safety regulations associated with prescribed requirements covering hazardous materials management and employee training, communications, personal protective equipment, documentation and record keeping associated therewith.

***Adequate Assurances***

If, in the judgment of Seller, the financial condition of the Buyer, at any time during the period of the contract, does not justify the terms of payment specified, Seller may require full or partial payment in advance.

***Delayed Payment***

If payments are not made in accordance with these terms, a service charge will, without prejudice to the right of Seller to immediate payment, be added in an amount equal to the lower of 1.5% per month or fraction thereof or the highest legal rate on the unpaid balance.

## Freight

Freight policy will be listed on the Product discount sheets, or at option of Seller one of the following freight terms will be quoted.

### *F.O.B.—P/S—Frt./Ppd. and Invoiced*

Products are sold F.O.B. point of shipment freight prepaid and invoiced to the Buyer.

### *F.O.B.—P/S—Frt./Ppd. and Allowed*

Products sold are delivered F.O.B. point of shipment, freight prepaid and included in the price.

### *F.O.B. Destination—Frt./Ppd. and Allowed*

At Buyer's option, Seller will deliver the Products F.O.B. destination freight prepaid and 2% will be added to the net price.

The term "freight prepaid" means that freight charges will be prepaid to the accessible common carrier delivery point nearest the destination for shipments within the United States and Puerto Rico unless noted differently on the Product discount sheets. For any other destination contact Seller's representative.

### *Shipment and Routing*

Seller shall select the point of origin of shipment, the method of transportation, the type of carrier equipment and the routing of the shipment.

If the Buyer specifies a special method of transportation, type of carrier equipment, routing, or delivery requirement, Buyer shall pay all special freight and handling charges.

When freight is included in the price, no allowance will be made in lieu of transportation if the Buyer accepts shipment at factory, warehouse, or freight station or otherwise supplies its own transportation.

### *Risk of Loss*

Risk of loss or damage to the Products shall pass to Buyer at the F.O.B. point.

### *Concealed Damage*

Except in the event of F.O.B. destination shipments, Seller will not participate in any settlement of claims for concealed damage.

When shipment has been made on an F.O.B. destination basis, the Buyer must unpack immediately and, if damage is discovered must:

1. Not move the Products from the point of examination.
2. Retain shipping container and packing material.
3. Notify the carrier in writing of any apparent damage.
4. Notify Seller representative within 72 hours of delivery.
5. Send Seller a copy of the carrier's inspection report.

### *Witness Tests/Customer Inspection*

Standard factory tests may be witnessed by the Buyer at Seller's factory for an additional charge calculated at the rate of $2,500 per day (not to exceed eight (8) hours) per Product type. Buyer may final inspect Products at the Seller's factory for $500 per day per Product type.

Witness tests will add one (1) week to the scheduled shipping date. Seller will notify Buyer fourteen (14) calendar days prior to scheduled witness testing or inspection. In the event Buyer is unable to attend, the Parties shall mutually agree on a rescheduled date. However, Seller reserves the right to deem the witness tests waived with the right to ship and invoice Products.

### *Held Orders*

For any order held, delayed or rescheduled at the request of the Buyer, Seller may, at its sole option (1) require payment to be based on any reasonable basis, including but not limited to the contract price, and any additional expenses, or cost resulting from such a delay; (2) store Products at the sole cost and risk of loss of the Buyer; and/or (3) charge to the Buyer those prices under the applicable price policy. Payment for such price, expenses and costs, in any such event, shall be due by Buyer within thirty (30) days from date of Seller's invoice. Any order so held delayed or rescheduled beyond six (6) months will be treated as a Buyer termination.

### *Drawing Approval*

Seller will design the Products in line with, in Seller's judgment, good commercial practice. If at drawing approval Buyer makes changes outside of the design as covered in their specifications, Seller will then be paid reasonable charges and allowed a commensurate delay in shipping date based on the changes made.

### *Drawing Re-Submittal*

When Seller agrees to do so in its quotation, Seller shall provide Buyer with the first set of factory customer approval drawing(s) at Seller's expense. The customer approval drawing(s) will be delivered at the quoted delivery date. If Buyer requests drawing changes or additions after the initial factory customer approval drawing(s) have been submitted by Seller, the Seller, at its option, may assess Buyer drawing charges. Factory customer approval drawing changes required due to misinterpretation by Seller will be at Seller's expense. Approval drawings generated by Bid Manager are excluded from this provision.

## Warranty

### *Warranty for Products*

Seller warrants that the Products manufactured by it will conform to Seller's applicable specifications and be free from failure due to defects in workmanship and material for one (1) year from the date of installation of the Product or eighteen (18) months from the date of shipment of the Product, whichever occurs first.

In the event any Product fails to comply with the foregoing warranty Seller will, at its option, either (a) repair or replace the defective Product, or defective part or component thereof, F.O.B. Seller's facility freight prepaid, or (b) credit Buyer for the purchase price of the Product. All warranty claims shall be made in writing.

Seller requires all non-conforming Products be returned at Seller's expense for evaluation unless specifically stated otherwise in writing by Seller.

This warranty does not cover failure or damage due to storage, installation, operation or maintenance not in conformance with Seller's recommendations and industry standard practice or due to accident, misuse, abuse or negligence. This warranty does not cover reimbursement for labor, gaining access, removal, installation, temporary power or any other expenses, which may be incurred in connection with repair or replacement.

This warranty does not apply to equipment not manufactured by Seller. Seller limits itself to extending the same warranty it receives from the supplier.

Effective Date: November 1, 2008

***Extended Warranty for Products***

If requested by the Buyer and specifically accepted in writing by Seller, the foregoing standard warranty for Products will be extended from the date of shipment for the period and price indicated below:

- 24 months—2% of Contract Price
- 30 months—3% of Contract Price
- 36 months—4% of Contract Price

***Special Warranty (In and Out) for Products***

If requested by the Buyer and specifically accepted in writing by Seller, Seller will, during the warranty period for Products, at an additional cost of 2% of the contract price, be responsible for the direct cost of:

1. Removing the Product from the installed location.
2. Transportation to the repair facility and return to the site.
3. Reinstallation on site.

The total liability of Seller for this Special Warranty for Products is limited to 50% of the contract price of the particular Product being repaired and excludes expenses for removing adjacent apparatus, walls, piping, structures, temporary service, etc.

***Warranty for Services***

Seller warrants that the Services performed by it hereunder will be performed in accordance with generally accepted professional standards.

The Services, which do not so conform, shall be corrected by Seller upon notification in writing by the Buyer within one (1) year after completion of the Services.

Unless otherwise agreed to in writing by Seller, Seller assumes no responsibility with respect to the suitability of the Buyer's, or its customer's, equipment or with respect to any latent defects in equipment not supplied by Seller. This warranty does not cover damage to Buyer's, or its customer's, equipment, components or parts resulting in whole or in part from improper maintenance or operation or from their deteriorated condition. Buyer will, at its cost, provide Seller with unobstructed access to the defective Services, as well as adequate free working space in the immediate vicinity of the defective Services and such facilities and systems, including, without limitation, docks, cranes and utility disconnects and connects, as may be necessary in order that Seller may perform its warranty obligations. The conducting of any tests shall be mutually agreed upon and Seller shall be notified of, and may be present at, all tests that may be made.

***Warranty for Power Systems Studies***

Seller warrants that any power systems studies performed by it will conform to generally accepted professional standards. Any portion of the study, which does not so conform, shall be corrected by Seller upon notification in writing by the Buyer within six (6) months after completion of the study. All warranty work shall be performed in a single shift straight time basis Monday through Friday. In the event that the study requires correction of warranty items on an overtime schedule, the premium portion of such overtime shall be for the Buyer's account.

***Limitation on Warranties for Products, Services and Power Systems Studies***

THE FOREGOING WARRANTIES ARE EXCLUSIVE EXCEPT FOR WARRANTY OF TITLE. SELLER DISCLAIMS ALL OTHER WARRANTIES INCLUDING ANY IMPLIED WARRANTIES OF MERCHANTABILITY AND FITNESS FOR A PARTICULAR PURPOSE.

CORRECTION OF NON-CONFORMITIES IN THE MANNER AND FOR THE PERIOD OF TIME PROVIDED ABOVE SHALL CONSTITUTE SELLER'S SOLE LIABILITY AND BUYER'S EXCLUSIVE REMEDY FOR FAILURE OF SELLER TO MEET ITS WARRANTY OBLIGATIONS, WHETHER CLAIMS OF THE BUYER ARE BASED IN CONTRACT, IN TORT (INCLUDING NEGLIGENCE OR STRICT LIABILITY), OR OTHERWISE.

***Asbestos***

Federal Law requires that building or facility owners identify the presence, location and quantity of asbestos containing material (hereinafter "ACM") at work sites. Seller is not licensed to abate ACM. Accordingly, for any contract which includes the provision of Services, prior to (i) commencement of work at any site under a specific Purchase Order, (ii) a change in the work scope of any Purchase Order, the Buyer will certify that the work area associated with the Seller's scope of work includes the handling of Class II ACM, including but not limited to generator wedges and high temperature gaskets which include asbestos materials. The Buyer shall, at its expense, conduct abatement should the removal, handling, modification or reinstallation, or some or all of them, of said Class II ACM be likely to generate airborne asbestos fibers; and should such abatement affect the cost of or time of performance of the work then Seller shall be entitled to an equitable adjustment in the schedule, price and other pertinent affected provisions of the contract.

***Compliance with Nuclear Regulation***

Seller's Products are sold as commercial grade Products not intended for application in facilities or activities licensed by the United States Nuclear Regulatory Commission for atomic purposes. Further certification will be required for use of the Products in any safety-related application in any nuclear facility licensed by the U.S. Nuclear Regulatory Commission.

***Returning Products***

Authorization and shipping instructions for the return of any Products must be obtained from Seller before returning the Products.

When return is occasioned due to Seller error, full credit including all transportation charges will be allowed.

***Product Notices***

Buyer shall provide the user (including its employees) of the Products with all Seller supplied Product notices, warnings, instructions, recommendations, and similar materials.

***Force Majeure***

Seller shall not be liable for failure to perform or delay in performance due to fire, flood, strike or other labor difficulty, act of God, act of any governmental authority or of the Buyer, riot, embargo, fuel or energy shortage, car shortage, wrecks or delays in transportation, or due to any other cause beyond Seller's reasonable control. In the event of delay in performance due to any such cause, the date of delivery or time for completion will be extended by a period of time reasonably necessary to overcome the effect of such delay.

***Liquidated Damages***

Contracts which include liquidated damage clauses for failure to meet shipping or job completion promises are not acceptable or binding on Seller, unless such clauses are specifically accepted in writing by an authorized representative of the Seller at its headquarters office.

***Patent Infringement***

Seller will defend or, at its option, settle any suit or proceeding brought against Buyer, or Buyer's customers, to the extent it is based upon a claim that any Product or part thereof, manufactured by Seller or its subsidiaries and furnished hereunder, infringes any United States patent, other than a claim of infringement based upon use of a Product or part thereof in a process, provided Seller is notified in reasonable time and given authority, information and assistance (at Seller's expense) for the defense of same. Seller shall pay all legal and court costs and expenses and court-assessed damages awarded therein against Buyer resulting from or incident to such suit or proceeding. In addition to the foregoing, if at any time Seller determines there is a substantial question of infringement of any United States patent, and the use of such Product is or may be enjoined, Seller may, at its option and expense: either (a) procure for Buyer the right to continue using and selling the Product; (b) replace the Product with non-infringing apparatus; (c) modify the Product so it becomes non-infringing; or (d) as a last resort, remove the Product and refund the purchase price, equitably adjusted for use and obsolescence. In no case does Seller agree to pay any recovery based upon its Buyer's savings or profit through use of Seller's Products whether the use be special or ordinary. The foregoing states the entire liability of Seller for patent infringement.

The preceding paragraph does not apply to any claim of infringement based upon: (a) any modification made to a Product other than by Seller; (b) any design and/or specifications of Buyer to which a Product was manufactured; or (c) the use or combination of Product with other products where the Product does not itself infringe. As to the above-identified claim situations where the preceding paragraph does not apply, Buyer shall defend and hold Seller harmless in the same manner and to the extent as Seller's obligations described in the preceding paragraph. Buyer shall be responsible for obtaining (at Buyer's expense) all license rights required for Seller to be able to use software products in the possession of Buyer where such use is required in order to perform any Service for Buyer.

With respect to a Product or part thereof not manufactured by Seller or its subsidiaries, Seller will attempt to obtain for Buyer, from the supplier(s), the patent indemnification protection normally provided by the supplier(s) to customers.

***Limitation of Liability***

THE REMEDIES OF THE BUYER SET FORTH IN THIS CONTRACT ARE EXCLUSIVE AND ARE ITS SOLE REMEDIES FOR ANY FAILURE OF SELLER TO COMPLY WITH ITS OBLIGATIONS HEREUNDER.

NOTWITHSTANDING ANY PROVISION IN THIS CONTRACT TO THE CONTRARY, IN NO EVENT SHALL SELLER BE LIABLE IN CONTRACT, IN TORT (INCLUDING NEGLIGENCE OR STRICT LIABILITY) OR OTHERWISE FOR DAMAGE TO PROPERTY OR EQUIPMENT OTHER THAN PRODUCTS SOLD HEREUNDER, LOSS OF PROFITS OR REVENUE, LOSS OF USE OF PRODUCTS, COST OF

CAPITAL, CLAIMS OF CUSTOMERS OF THE BUYER OR ANY SPECIAL, INDIRECT, INCIDENTAL OR CONSEQUENTIAL DAMAGES WHATSOEVER, REGARDLESS OF WHETHER SUCH POTENTIAL DAMAGES ARE FORESEEABLE OR IF SELLER HAS BEEN ADVISED OF THE POSSIBILITY OF SUCH DAMAGES.

THE TOTAL CUMULATIVE LIABILITY OF SELLER ARISING FROM OR RELATED TO THIS CONTRACT WHETHER THE CLAIMS ARE BASED IN CONTRACT, IN TORT (INCLUDING NEGLIGENCE OR STRICT LIABILITY) OR OTHERWISE, SHALL NOT EXCEED THE PRICE OF THE PRODUCT OR SERVICES ON WHICH SUCH LIABILITY IS BASED.

**A**

ACD . . . . . V1-**T6**-4, V1-**T6**-6
ACD2 . . . . . V1-**T6**-4, V1-**T6**-6
ARP . . . . . V1-**T4**-77, V1-**T5**-8
ARP0 . . . . . V1-**T4**-30, V1-**T4**-33, V1-**T4**-85

**B**

BD . . . . . V1-**T1**-81
BH . . . . . V1-**T1**-85
BHG . . . . . V1-**T1**-85
BHL . . . . . V1-**T1**-85
BHT . . . . . V1-**T1**-85
BIN . . . . . V1-**T1**-25
BINA . . . . . V1-**T1**-22, V1-**T1**-25, V1-**T1**-61, V1-**T1**-92
BJ . . . . . V1-**T1**-84, V1-**T1**-85
BJH . . . . . V1-**T1**-84, V1-**T1**-85
BJL . . . . . V1-**T1**-86
BQ . . . . . V1-**T1**-81
BQC . . . . . V1-**T1**-83
BR . . . . . V1-**T2**-10
BRB . . . . . V1-**T1**-26
BRC . . . . . V1-**T1**-26, V1-**T1**-57
BRD . . . . . V1-**T1**-26, V1-**T1**-82, V1-**T1**-85
BRE . . . . . V1-**T1**-85
BRF . . . . . V1-**T1**-61
BRG . . . . . V1-**T1**-26, V1-**T1**-59, V1-**T1**-66, V1-**T1**-93
BRH . . . . . V1-**T1**-52, V1-**T1**-77, V1-**T1**-78, V1-**T1**-85, V1-**T4**-98, V1-**T4**-127
BRHH . . . . . V1-**T1**-77, V1-**T4**-98, V1-**T4**-127
BRL . . . . . V1-**T1**-26, V1-**T1**-52, V1-**T1**-57, V1-**T1**-61, V1-**T1**-78, V1-**T1**-85
BRL2 . . . . . V1-**T1**-79
BRM . . . . . V1-**T1**-61, V1-**T1**-86
BRP . . . . . V1-**T1**-86
BRQ . . . . . V1-**T1**-85
BRR . . . . . V1-**T1**-61
BRS . . . . . V1-**T1**-15, V1-**T1**-52, V1-**T1**-61, V1-**T1**-84, V1-**T4**-139
BRSF . . . . . V1-**T4**-139
BRSUR . . . . . V1-**T1**-15, V1-**T2**-9
BRW . . . . . V1-**T1**-84
BRX . . . . . V1-**T1**-77
BR1 . . . . . V1-**T1**-46–V1-**T1**-49, V1-**T1**-51, V1-**T1**-53, V1-**T1**-59, V1-**T1**-60, V1-**T1**-77, V1-**T1**-78, V1-**T1**-82
BR2 . . . . . V1-**T1**-46–V1-**T1**-49, V1-**T1**-51–V1-**T1**-52, V1-**T1**-57, V1-**T1**-59, V1-**T1**-60, V1-**T1**-77, V1-**T1**-82, V1-**T1**-84, V1-**T4**-98, V1-**T4**-127, V1-**T5**-22
BR23 . . . . . V1-**T2**-7
BR25 . . . . . V1-**T2**-7
BR3 . . . . . V1-**T1**-46, V1-**T1**-49, V1-**T1**-51–V1-**T1**-52, V1-**T1**-57, V1-**T1**-59, V1-**T1**-78, V1-**T1**-82
BR4 . . . . . V1-**T1**-46–V1-**T1**-49, V1-**T1**-51–V1-**T1**-53, V1-**T1**-57, V1-**T1**-82
BR42 . . . . . V1-**T1**-47
BR5 . . . . . V1-**T1**-58
BR6 . . . . . V1-**T1**-48
BR8 . . . . . V1-**T1**-46, V1-**T1**-48, V1-**T1**-49, V1-**T1**-51, V1-**T1**-52
BSC . . . . . V1-**T1**-22
BSS . . . . . V1-**T1**-22, V1-**T1**-61
BW . . . . . V1-**T1**-61, V1-**T4**-43
BWFP . . . . . V1-**T1**-61
B424 . . . . . V1-**T1**-47
B60N . . . . . V1-**T6**-4, V1-**T6**-6

**C**

CC . . . . . V1-**T1**-38, V1-**T1**-56, V1-**T1**-85, V1-**T1**-95
CCH . . . . . V1-**T1**-95
CCL . . . . . V1-**T1**-38, V1-**T1**-85
CCV . . . . . V1-**T1**-95, V1-**T4**-95
CCVH . . . . . V1-**T1**-95, V1-**T4**-95, V1-**T4**-98, V1-**T4**-137
CCV2 . . . . . V1-**T4**-95, V1-**T4**-98, V1-**T4**-127, V1-**T4**-137
CC3 . . . . . V1-**T1**-95, V1-**T4**-137
CG . . . . . V1-**T4**-76
CH . . . . . V1-**T1**-90
CHB . . . . . V1-**T1**-22, V1-**T1**-61, V1-**T5**-8
CHE . . . . . V1-**T1**-16, V1-**T1**-23
CHEC . . . . . V1-**T2**-9
CHEG . . . . . V1-**T3**-14, V1-**T3**-18
CHF . . . . . V1-**T1**-22, V1-**T1**-32, V1-**T1**-33
CHFL . . . . . V1-**T5**-7
CHG . . . . . V1-**T1**-25
CHH . . . . . V1-**T1**-38
CHI . . . . . V1-**T5**-8
CHL . . . . . V1-**T1**-11, V1-**T1**-16, V1-**T1**-38, V1-**T1**-99, V1-**T5**-8
CHLD . . . . . V1-**T5**-8
CHLDF . . . . . V1-**T5**-8, V1-**T5**-9
CHM . . . . . V1-**T1**-22, V1-**T1**-38, V1-**T4**-41, V1-**T5**-12, V1-**T5**-17
CHMM . . . . . V1-**T4**-41
CHM1 . . . . . V1-**T5**-12, V1-**T5**-17
CHM4 . . . . . V1-**T5**-17
CHM5 . . . . . V1-**T5**-12
CHM7 . . . . . V1-**T5**-12
CHN . . . . . V1-**T1**-22, V1-**T1**-25, V1-**T5**-9
CHOU . . . . . V1-**T5**-9
CHP . . . . . V1-**T1**-24, V1-**T1**-36–V1-**T1**-38, V1-**T5**-23
CHPA . . . . . V1-**T5**-7, V1-**T5**-23
CHPE . . . . . V1-**T5**-7, V1-**T5**-23
CHPO . . . . . V1-**T5**-8, V1-**T5**-9
CHQ . . . . . V1-**T1**-97, V1-**T2**-10
CHR . . . . . V1-**T1**-22, V1-**T5**-12, V1-**T5**-17
CHR1 . . . . . V1-**T5**-12, V1-**T5**-17
CHR3 . . . . . V1-**T5**-12
CHR7 . . . . . V1-**T5**-12
CHS . . . . . V1-**T1**-15, V1-**T1**-16, V1-**T1**-22
CHSA . . . . . V1-**T2**-10
CHSPC . . . . . V1-**T2**-6
CHSPF . . . . . V1-**T2**-6
CHSPT . . . . . V1-**T2**-4–V1-**T2**-6
CHSP3 . . . . . V1-**T2**-6
CHSUR . . . . . V1-**T2**-9
CHT . . . . . V1-**T1**-35
CHTE . . . . . V1-**T5**-7

CHU . . . . . V1-**T4**-84, V1-**T4**-85, V1-**T5**-11, V1-**T5**-17
CHUD . . . . . V1-**T5**-9
CHU1 . . . . . V1-**T5**-11, V1-**T5**-17
CHU2 . . . . . V1-**T4**-84, V1-**T5**-11
CHU3 . . . . . V1-**T5**-11
CHU4 . . . . . V1-**T5**-11, V1-**T5**-17
CHU5 . . . . . V1-**T5**-11
CHU6 . . . . . V1-**T5**-11
CHU7 . . . . . V1-**T5**-11
CHVH . . . . . V1-**T4**-127
CH1 . . . . . V1-**T1**-7, V1-**T1**-10, V1-**T1**-13, V1-**T1**-23, V1-**T1**-32–V1-**T1**-35, V1-**T1**-37, V1-**T1**-38, V1-**T3**-17, V1-**T3**-18, V1-**T4**-84
CH2 . . . . . V1-**T1**-7–V1-**T1**-10, V1-**T1**-11, V1-**T1**-13, V1-**T1**-17, V1-**T1**-18, V1-**T1**-23, V1-**T1**-32–V1-**T1**-35, V1-**T1**-37, V1-**T4**-77, V1-**T4**-84, V1-**T4**-85
CH2L . . . . . V1-**T1**-9
CH23 . . . . . V1-**T2**-7
CH25 . . . . . V1-**T2**-7
CH3 . . . . . V1-**T1**-7, V1-**T1**-8, V1-**T1**-10–V1-**T1**-14, V1-**T1**-17, V1-**T1**-18, V1-**T1**-23, V1-**T1**-32–V1-**T1**-35, V1-**T3**-14
CH4 . . . . . V1-**T1**-7–V1-**T1**-14, V1-**T1**-17, V1-**T1**-18, V1-**T1**-23, V1-**T3**-17, V1-**T3**-18
CH4L . . . . . V1-**T1**-9
CH5 . . . . . V1-**T1**-14, V1-**T4**-85
CH6 . . . . . V1-**T1**-13, V1-**T1**-14, V1-**T1**-17, V1-**T1**-23, V1-**T3**-17, V1-**T3**-18
CH7 . . . . . V1-**T1**-7, V1-**T1**-10–V1-**T1**-13, V1-**T1**-24
CH8 . . . . . V1-**T1**-7–V1-**T1**-11, V1-**T1**-17, V1-**T1**-18, V1-**T1**-23, V1-**T1**-26, V1-**T3**-17, V1-**T3**-18
CH8L . . . . . V1-**T1**-9
CH9 . . . . . V1-**T1**-25, V1-**T1**-38, V1-**T1**-61
CLRP . . . . . V1-**T1**-98
CL1 . . . . . V1-**T1**-98
CL2 . . . . . V1-**T1**-98
CMB . . . . . V1-**T4**-41, V1-**T4**-42, V1-**T4**-66
CMBB . . . . . V1-**T4**-41
CMBE . . . . . V1-**T4**-50, V1-**T4**-51, V1-**T4**-66, V1-**T4**-86
CMBX . . . . . V1-**T4**-42
CSH . . . . . V1-**T1**-11, V1-**T1**-16
CSH2 . . . . . V1-**T1**-11, V1-**T4**-43
CSR . . . . . V1-**T1**-11, V1-**T1**-16, V1-**T1**-22, V1-**T1**-52, V1-**T4**-43, V1-**T5**-22
CSR2 . . . . . V1-**T1**-11, V1-**T4**-43
CTA . . . . . V1-**T4**-117
CVH . . . . . V1-**T4**-137
CVH2 . . . . . V1-**T4**-97, V1-**T4**-98, V1-**T4**-127
CVS . . . . . V1-**T4**-137
CVS2 . . . . . V1-**T4**-97, V1-**T4**-98, V1-**T4**-127
CV2 . . . . . V1-**T4**-97, V1-**T4**-98, V1-**T4**-127, V1-**T4**-137
CV3 . . . . . V1-**T4**-137

**D**

DPB . . . . . V1-**T6**-4, V1-**T6**-6
DPB2 . . . . . V1-**T6**-4, V1-**T6**-6
DPF . . . . . V1-**T6**-4–V1-**T6**-6
DPF2 . . . . . V1-**T6**-4–V1-**T6**-6
DPU . . . . . V1-**T6**-4–V1-**T6**-6
DPU2 . . . . . V1-**T6**-4–V1-**T6**-5
DS . . . . . V1-**T1**-25, V1-**T1**-66, V1-**T5**-7
DS1 . . . . . V1-**T4**-67
DS2 . . . . . V1-**T4**-67
DS3 . . . . . V1-**T4**-67
DS9 . . . . . V1-**T4**-67

**E**

ECC . . . . . V1-**T1**-95
ECCV . . . . . V1-**T1**-95
EDL . . . . . V1-**T4**-34
EGEN . . . . . V1-**T3**-3, V1-**T3**-4
EGS . . . . . V1-**T3**-18
EHD . . . . . V1-**T4**-137
EPBD . . . . . V1-**T4**-34
EPBQ . . . . . V1-**T4**-34
EPBS . . . . . V1-**T4**-34
EPBT . . . . . V1-**T4**-34
ESL . . . . . V1-**T4**-34

**G**

GB . . . . . V1-**T1**-25, V1-**T1**-66, V1-**T1**-93
GBK . . . . . V1-**T5**-9
GFC . . . . . V1-**T1**-79, V1-**T1**-80
GFE . . . . . V1-**T1**-80
GHC . . . . . V1-**T5**-75
GTAP . . . . . V1-**T1**-59

**H**

HL . . . . . V1-**T1**-85
HPB . . . . . V1-**T4**-77
HPC . . . . . V1-**T4**-76
HPP . . . . . V1-**T4**-77
HP2 . . . . . V1-**T4**-77
HP4 . . . . . V1-**T4**-76, V1-**T4**-77
HP8 . . . . . V1-**T4**-76

**I**

IG12 . . . . . V1-**T2**-8
IG52 . . . . . V1-**T2**-8
IG53 . . . . . V1-**T2**-8
IMM . . . . . V1-**T4**-67

**J**

JT . . . . . V1-**T5**-75

**L**

LC . . . . . V1-**T1**-22, V1-**T1**-61

**M**

MBB . . . . . V1-**T4**-41
MBE . . . . . V1-**T4**-50, V1-**T4**-66
MBED . . . . . V1-**T4**-60
MBER . . . . . V1-**T4**-51
MBE1 . . . . . V1-**T4**-50, V1-**T4**-51
MBE2 . . . . . V1-**T4**-50, V1-**T4**-51
MBE3 . . . . . V1-**T4**-51
MBE4 . . . . . V1-**T4**-51

MBE8 . . . . . V1-**T4**-51
MBH . . . . . V1-**T4**-67
MBP . . . . . V1-**T4**-41
MBT . . . . . V1-**T4**-42
MBX . . . . . V1-**T4**-41
MB1 . . . . . V1-**T4**-42
MB2 . . . . . V1-**T4**-66
MB20 . . . . . V1-**T4**-42
MB4 . . . . . V1-**T4**-42
MB5 . . . . . V1-**T4**-67
MB8 . . . . . V1-**T4**-42, V1-**T4**-66
MCB . . . . . V1-**T1**-38, V1-**T1**-85, V1-**T4**-43
MCBK . . . . . V1-**T4**-43
MHD . . . . . V1-**T5**-23
MHM. . . . . V1-**T5**-22
MHP . . . . . V1-**T5**-23
MHR . . . . . V1-**T5**-22
MM . . . . . V1-**T4**-139
MPL. . . . . V1-**T5**-75–V1-**T5**-77
MPLFH . . . . . V1-**T5**-77
MSEG . . . . . V1-**T2**-6, V1-**T4**-35
MSL. . . . . V1-**T4**-142
MST. . . . . V1-**T4**-142

**N**

NL . . . . . V1-**T1**-22, V1-**T1**-61

**Q**

QCF. . . . . V1-**T5**-75
QCGF . . . . . V1-**T5**-75

**R**

RH . . . . . V1-**T1**-66
RN . . . . . V1-**T1**-18
RV . . . . . V1-**T5**-75, V1-**T5**-77

**S**

SPC . . . . . V1-**T1**-22, V1-**T1**-61
SP1 . . . . . V1-**T2**-4
SR . . . . . V1-**T1**-39, V1-**T1**-86
SRL . . . . . V1-**T1**-22, V1-**T1**-61
ST . . . . . V1-**T1**-39
STL . . . . . V1-**T4**-26

**T**

TCD . . . . . V1-**T1**-22, V1-**T1**-61
TDL . . . . . V1-**T1**-22, V1-**T1**-61
TH . . . . . V1-**T1**-85
TT120 . . . . . V1-**T1**-21

**U**

UAHT. . . . . V1-**T4**-5
UAST. . . . . V1-**T4**-26
UAT . . . . . V1-**T4**-20
UATE. . . . . V1-**T4**-15
UATH. . . . . V1-**T4**-12, V1-**T4**-13
UATR. . . . . V1-**T4**-4–V1-**T4**-6
UATZ. . . . . V1-**T4**-6, V1-**T4**-21
UBEH. . . . . V1-**T4**-14
UBGT. . . . . V1-**T4**-15
UBH . . . . . V1-**T4**-20, V1-**T4**-21
UBHR. . . . . V1-**T4**-5, V1-**T4**-6, V1-**T4**-14
UBHT. . . . . V1-**T4**-5
UBTE . . . . . V1-**T4**-14
UBTH. . . . . V1-**T4**-12, V1-**T4**-13
UBTR . . . . . V1-**T4**-6
UEHT . . . . . V1-**T4**-20
UETH . . . . . V1-**T4**-14
UE7 . . . . . V1-**T4**-14
UFHT . . . . . V1-**T4**-4–V1-**T4**-5
UFT . . . . . V1-**T4**-12, V1-**T4**-15
UFTE . . . . . V1-**T4**-14
UFTH . . . . . V1-**T4**-12
UFTR . . . . . V1-**T4**-5
UGE . . . . . V1-**T4**-15
UGHR. . . . . V1-**T4**-5
UGHT. . . . . V1-**T4**-4–V1-**T4**-6, V1-**T4**-31
UGRS. . . . . V1-**T4**-6
UGTE . . . . . V1-**T4**-14, V1-**T4**-15
UGTH. . . . . V1-**T4**-12
UGTR . . . . . V1-**T4**-4, V1-**T4**-5, V1-**T4**-31
UHI. . . . . V1-**T4**-20
UHIR . . . . . V1-**T4**-5
UHT . . . . . V1-**T4**-20, V1-**T4**-21
UHTR . . . . . V1-**T4**-4–V1-**T4**-6, V1-**T4**-28, V1-**T4**-31
UHTT . . . . . V1-**T4**-4, V1-**T4**-6, V1-**T4**-20
UH4 . . . . . V1-**T4**-12
UH5 . . . . . V1-**T4**-12
UH7 . . . . . V1-**T4**-12
UIH. . . . . V1-**T4**-14
ULTS . . . . . V1-**T4**-26
UNRR. . . . . V1-**T4**-7
URRS . . . . . V1-**T4**-7
URS . . . . . V1-**T4**-4, V1-**T4**-6, V1-**T4**-7
URT . . . . . V1-**T4**-22
URTR . . . . . V1-**T4**-7
USTH . . . . . V1-**T4**-26
USTL . . . . . V1-**T4**-26
USTS . . . . . V1-**T4**-26
UST6 . . . . . V1-**T4**-26
UTE . . . . . V1-**T4**-14, V1-**T4**-32
UTH . . . . . V1-**T4**-12, V1-**T4**-13, V1-**T4**-32
UTRS . . . . . V1-**T4**-4–V1-**T4**-7, V1-**T4**-31
UTTE . . . . . V1-**T4**-14, V1-**T4**-15
UTTH . . . . . V1-**T4**-12
UTZR . . . . . V1-**T4**-6
UT2 . . . . . V1-**T4**-20, V1-**T4**-21
UT3 . . . . . V1-**T4**-21
UT4 . . . . . V1-**T4**-20, V1-**T4**-21
UT5 . . . . . V1-**T4**-21
UT6 . . . . . V1-**T4**-21
U2R . . . . . V1-**T4**-22
U2V . . . . . V1-**T4**-22
U3R . . . . . V1-**T4**-20, V1-**T4**-22
U3V . . . . . V1-**T4**-22
U4R . . . . . V1-**T4**-20–V1-**T4**-22

U5R . . . . . V1-**T4**-20–V1-**T4**-22
U6R . . . . . V1-**T4**-20
U921 . . . . . V1-**T4**-5

## W

WCG . . . . . V1-**T4**-138

## Numerics

1BPS . . . . . V1-**T4**-108
1MCB . . . . . V1-**T4**-104, V1-**T4**-105
1MFS. . . . . V1-**T4**-106, V1-**T4**-107
1MHC . . . . . V1-**T4**-104, V1-**T4**-105
1MM . . . . . V1-**T4**-115, V1-**T4**-121, V1-**T4**-138, V1-**T4**-139, V1-**T4**-141
1MMA. . . . . V1-**T4**-138
1MMB. . . . . V1-**T4**-138–V1-**T4**-142
1MMC. . . . . V1-**T4**-140
1MMG. . . . . V1-**T4**-94
1MMJ . . . . . V1-**T4**-139
1MMM . . . . . V1-**T4**-140
1MMP. . . . . V1-**T4**-138
1MMR. . . . . V1-**T4**-140
1MMS. . . . . V1-**T4**-139
1MMW . . . . . V1-**T4**-138, V1-**T4**-141
1MM3 . . . . . V1-**T4**-120, V1-**T4**-121
1MM4 . . . . . V1-**T4**-120, V1-**T4**-121
1MM5 . . . . . V1-**T4**-120, V1-**T4**-121, V1-**T4**-138
1MM6 . . . . . V1-**T4**-120, V1-**T4**-121
1MPL. . . . . V1-**T4**-94
1MPS . . . . . V1-**T4**-92–V1-**T4**-94
1MP2. . . . . V1-**T4**-92, V1-**T4**-93
1MP3. . . . . V1-**T4**-92, V1-**T4**-93
1MP4. . . . . V1-**T4**-92, V1-**T4**-93
1MP5. . . . . V1-**T4**-92, V1-**T4**-93
1MP6. . . . . V1-**T4**-92, V1-**T4**-93
1MTB . . . . . V1-**T4**-103
1UGP. . . . . V1-**T4**-107
1003 . . . . . V1-**T4**-5, V1-**T4**-6
1004 . . . . . V1-**T4**-5, V1-**T4**-6, V1-**T4**-13, V1-**T4**-20, V1-**T4**-21, V1-**T4**-26
1005 . . . . . V1-**T4**-6
1006 . . . . . V1-**T4**-6, V1-**T4**-13, V1-**T4**-20, V1-**T4**-28
1007 . . . . . V1-**T4**-5, V1-**T4**-13, V1-**T4**-15, V1-**T4**-20, V1-**T4**-26
1008 . . . . . V1-**T4**-5, V1-**T4**-6, V1-**T4**-13, V1-**T4**-15, V1-**T4**-20, V1-**T4**-21, V1-**T4**-26, V1-**T4**-28
1009 . . . . . V1-**T4**-5–V1-**T4**-7, V1-**T4**-13–V1-**T4**-15, V1-**T4**-20, V1-**T4**-21, V1-**T4**-28
1010 . . . . . V1-**T4**-12
1208 . . . . . V1-**T2**-8
1210 . . . . . V1-**T2**-8
1212. . . . . V1-**T1**-91
1224. . . . . V1-**T1**-50, V1-**T1**-91
1624. . . . . V1-**T1**-91
17NE . . . . . V1-**T1**-92
1836. . . . . V1-**T1**-91
20NE . . . . . V1-**T1**-92
2024. . . . . V1-**T1**-91
24IN . . . . . V1-**T1**-91
24NE . . . . . V1-**T1**-92
2424. . . . . V1-**T1**-91
2442. . . . . V1-**T1**-91
2460. . . . . V1-**T1**-21
3BPS . . . . . V1-**T4**-108
3BR . . . . . V1-**T1**-54–V1-**T1**-56, V1-**T1**-61
3B42 . . . . . V1-**T1**-54
3HM. . . . . V1-**T4**-109
3MC. . . . . V1-**T4**-109
3MCB. . . . . V1-**T4**-104, V1-**T4**-105, V1-**T4**-109
3MF . . . . . V1-**T4**-109
3MFS. . . . . V1-**T4**-106, V1-**T4**-107, V1-**T4**-109
3MHC . . . . . V1-**T4**-104, V1-**T4**-105
3MM . . . . . V1-**T4**-115, V1-**T4**-138, V1-**T4**-139
3MMB . . . . . V1-**T4**-138
3MME . . . . . V1-**T4**-139, V1-**T4**-141
3MM2 . . . . . V1-**T4**-120–V1-**T4**-123
3MM3 . . . . . V1-**T4**-120–V1-**T4**-123
3MM4 . . . . . V1-**T4**-120–V1-**T4**-123, V1-**T4**-128
3MM5 . . . . . V1-**T4**-120–V1-**T4**-123, V1-**T4**-128
3MM6 . . . . . V1-**T4**-120–V1-**T4**-123
3MTB. . . . . V1-**T4**-103
3UGP. . . . . V1-**T4**-107
304. . . . . V1-**T1**-91
3424. . . . . V1-**T1**-55
35MM . . . . . V1-**T4**-131
35NE . . . . . V1-**T1**-92
35SS . . . . . V1-**T4**-133
37M . . . . . V1-**T4**-141
37MM . . . . . V1-**T4**-132, V1-**T4**-141, V1-**T4**-142
37SS . . . . . V1-**T4**-133
4242. . . . . V1-**T1**-50, V1-**T1**-91
47. . . . . V1-**T4**-140, V1-**T4**-142
48IN . . . . . V1-**T1**-91
49. . . . . V1-**T4**-140, V1-**T4**-142
5250. . . . . V1-**T2**-8
5262. . . . . V1-**T2**-8
5362. . . . . V1-**T2**-8
612I . . . . . V1-**T1**-91
7821. . . . . V1-**T4**-13
7866. . . . . V1-**T4**-5
816I . . . . . V1-**T1**-91

## A


Access Panel
- Marina Power and Lighting Equipment/RV Park Hook-Ups
  - Accessories . . . . . V1-**T5**-77

Accessories
- Classified Circuit Breakers
  - Loadcenters and Circuit Breakers . . . . . V1-**T1**-99
- Manual Transfer Switches
  - Flush Flange Kit . . . . . V1-**T3**-18
  - Power Inlet Box . . . . . V1-**T3**-18
- Marina Power and Lighting Equipment/RV Park Hook-Ups
  - Access Panel . . . . . V1-**T5**-77
  - Breaker Plate . . . . . V1-**T5**-75
  - Bus Bar Assembly . . . . . V1-**T5**-76, V1-**T5**-77
  - Circuit Breakers . . . . . V1-**T5**-75
  - Cover Set . . . . . V1-**T5**-75
  - Digital Electronic Meters . . . . . V1-**T5**-76
  - Door Hasp . . . . . V1-**T5**-77
  - External Cover . . . . . V1-**T5**-76
  - Faceplate . . . . . V1-**T5**-75–V1-**T5**-77
  - Fire Extinguisher. . . . . V1-**T5**-77
  - Fluorescent Light Assembly. . . . . V1-**T5**-75
  - Fuse Holder . . . . . V1-**T5**-76
  - Hose and Cable Brackets . . . . . V1-**T5**-75
  - Isolation Plate. . . . . V1-**T5**-75
  - Lens . . . . . V1-**T5**-77
  - Life Ring . . . . . V1-**T5**-77
  - Light and Lens Assembly. . . . . V1-**T5**-75
  - Light Fuse. . . . . V1-**T5**-76, V1-**T5**-77
  - Light Holder . . . . . V1-**T5**-77
  - Main Door. . . . . V1-**T5**-75, V1-**T5**-77
  - Main Housing . . . . . V1-**T5**-75–V1-**T5**-77
  - Mounting Brackets. . . . . V1-**T5**-77
  - Mounting Feet . . . . . V1-**T5**-76
  - Phone, Cable, Internet Assemblies . . . . . V1-**T5**-76
  - Receptacles . . . . . V1-**T5**-75
  - Spring Closure . . . . . V1-**T5**-75
  - Strobe Light . . . . . V1-**T5**-77
  - Water Assemblies . . . . . V1-**T5**-76
- Metering Products
  - Group Metering Inline Current Transformer Cabinets Accessories, Group Metering . . . . . V1-**T4**-117
  - House Panel Accessories. . . . . V1-**T4**-77
  - Meter Socket Accessories . . . . . V1-**T4**-30
  - Metering Stack Accessories, Group Metering . V1-**T4**-138, V1-**T4**-139, V1-**T4**-141
  - West Coast All-In-One Design Accessories, Meter Breakers . V1-**T4**-60
- Mobile Home Panels. . . . . V1-**T5**-23
  - Direct Feed Kit . . . . . V1-**T5**-23
  - Padmount Adapter . . . . . V1-**T5**-23
  - Pedestal Extension. . . . . V1-**T5**-23
- Surge Protection Devices and Lightning Arresters
  - 3-Pack. . . . . V1-**T2**-6
  - Flushmount Kit . . . . . V1-**T2**-6
  - Outdoor Communication Grounding Device . . . . . V1-**T2**-6
  - Quick Connect Design . . . . . V1-**T2**-6
  - Raintight Enclosure . . . . . V1-**T2**-6
- Temporary Power/RV Park
  - Cable TV and Telephone Bracket . . . . . V1-**T5**-7
  - Fluorescent Light Kit. . . . . V1-**T5**-7
  - Pad-Mount Bracket . . . . . V1-**T5**-7
  - Pedestal Extension . . . . . V1-**T5**-7
  - Rainproof Conduit Hub . . . . . V1-**T5**-7
  - Renewal Parts. . . . . V1-**T5**-8
- Type BR Loadcenters and Circuit Breakers . . . . . V1-**T1**-61
  - Alarm Contacts . . . . . V1-**T1**-86
  - Auxiliary Contact . . . . . V1-**T1**-86
  - Field Installation and Parts . . . . . V1-**T1**-61
  - Filler Plates . . . . . V1-**T1**-61
  - Ground Bar Kits. . . . . V1-**T1**-66, V1-**T1**-93
  - Handle Lockoffs . . . . . V1-**T1**-85
  - Handle Ties . . . . . V1-**T1**-85
  - Hold-Down Kits. . . . . V1-**T1**-85
  - Main and Sub-Feed Lug Blocks . . . . . V1-**T1**-61
  - Main Breaker Lug Kits. . . . . V1-**T1**-85
  - Main Lugs . . . . . V1-**T1**-61
  - Mechanical Interlock Covers. . . . . V1-**T1**-64
  - Mechanical Interlocks . . . . . V1-**T1**-86
  - Padlock Brackets. . . . . V1-**T1**-86
  - Rainproof Conduit Hubs . . . . . V1-**T1**-66
  - Shunt Trip . . . . . V1-**T1**-86
- Type CH Loadcenters and Circuit Breakers . . . . . V1-**T1**-22
  - Decorator Cover . . . . . V1-**T1**-26
  - Field Installation and Parts . . . . . V1-**T1**-22
  - Goof Collars . . . . . V1-**T1**-26
  - Ground Bar Kits. . . . . V1-**T1**-25
  - Handle Lockdogs . . . . . V1-**T1**-38
  - Handle Lockoffs . . . . . V1-**T1**-38
  - Handle Ties . . . . . V1-**T1**-38
  - Hold-Down Kits. . . . . V1-**T1**-38
  - Main Breaker Lug Kits. . . . . V1-**T1**-38
  - Mechanical Interlock Covers. . . . . V1-**T1**-23
  - Mechanical Interlocks . . . . . V1-**T1**-23, V1-**T1**-38
  - Mounting Bases . . . . . V1-**T1**-38
  - Neutral Bar Accessories . . . . . V1-**T1**-25
  - Phase Adapters. . . . . V1-**T1**-25
  - Rainproof Conduit Hubs . . . . . V1-**T1**-25
  - Shunt Trip . . . . . V1-**T1**-39

Admiral—SS
- Marina Power and Lighting Equipment
  - Power Pedestals. . . . . V1-**T5**-62

Air Conditioning Disconnects. . . . . V1-**T6**-1–V1-**T6**-10
- Cross-Reference . . . . . V1-**T6**-6
- Ground Fault Receptacle . . . . . V1-**T6**-5
- Molded Case Switch . . . . . V1-**T6**-2, V1-**T6**-4
- Pullouts
  - Fused . . . . . V1-**T6**-2, V1-**T6**-4
  - Non-Fused. . . . . V1-**T6**-2, V1-**T6**-4

Air Cooled Generators
- Standby Generator. . . . . V1-**T3**-3

Air Cooled Standby
- Standby Generator System . . . . . V1-**T3**-2

Alarm Contacts
- Type BR Loadcenters and Circuit Breakers
  - Accessories. . . . . V1-**T1**-86

Aluminum Meter Breakers
- Metering Products
  - Meter Breakers. . . . . V1-**T4**-87

ATS Kit
Automatic Transfer Switches . . . . . V1-**T3**-14

ATS Ready LC with factory-installed ATS kit
Automatic Transfer Switches . . . . . V1-**T3**-14

ATS Ready Loadcenter
Automatic Transfer Switches . . . . . V1-**T3**-14

Automatic Transfer Switches . . . . . V1-**T3**-11–V1-**T3**-15
ATS Ready LC with factory-installed ATS kit. . . . . V1-**T3**-14
ATS Ready Loadcenter . . . . . V1-**T3**-14
ATS Kit . . . . . V1-**T3**-14
Eaton's Green Line . . . . . V1-**T3**-11
Fully Automatic Transfer Switches . . . . . V1-**T3**-11

Auxiliary Contact
Type BR Loadcenters and Circuit Breakers
Accessories . . . . . V1-**T1**-86

## B

BR Circuit Breakers
BR Specialty Products
Type BR
Loadcenters and Circuit Breakers . . . . . V1-**T1**-76

BR Quick Connect Neutral Loadcenters
BR Specialty Products
Type BR
Loadcenters and Circuit Breakers . . . . . V1-**T1**-57

Breaker Plate
Marina Power and Lighting Equipment/RV Park Hook-Ups
Accessories . . . . . V1-**T5**-75

Bus Bar Assembly
Marina Power and Lighting Equipment/RV Park Hook-Ups
Accessories . . . . . V1-**T5**-76, V1-**T5**-77

## C

Cable TV and Telephone Bracket
Temporary Power/RV Park
Accessories . . . . . V1-**T5**-7

CH Circuit Breakers
Type CH
Loadcenters and Circuit Breakers . . . . . V1-**T1**-31

CH Specialty Products
Non-Metallic Loadcenter. . . . . V1-**T1**-21

CH Style Renovation Solutions
Metering Products
Meter Breakers . . . . . V1-**T4**-86

Circuit Breakers
Marina Power and Lighting Equipment/RV Park Hook-Ups
Accessories . . . . . V1-**T5**-75

Classified Circuit Breakers
Loadcenters and Circuit Breakers . . . . . V1-**T1**-96–V1-**T1**-100
Accessories . . . . . V1-**T1**-99
Type CH Replacement Breakers . . . . . V1-**T1**-97

Commercial Lever Bypass Sockets
Metering Products . . . . . V1-**T4**-10–V1-**T4**-17

Commercial Meter Stack Modules
Group Metering
Metering Products . . . . . V1-**T4**-129

Commercial Safety Sockets
Meter Breakers
Metering Products . . . . . V1-**T4**-83

Common Trip Quadplex Breakers
Type BR
Loadcenters and Circuit Breakers. . . . . V1-**T1**-83

Communications Grounding Device
Metering Products. . . . . V1-**T4**-35, V1-**T4**-36

Convertible Loadcenters MCB
Type BR
Loadcenters and Circuit Breakers. . . . . V1-**T1**-51
Type CH
Loadcenters and Circuit Breakers. . . . . V1-**T1**-11

Convertible Loadcenters MLO
Type BR
Loadcenters and Circuit Breakers. . . . . V1-**T1**-51
Type CH
Loadcenters and Circuit Breakers. . . . . V1-**T1**-11

Cover Set
Marina Power and Lighting Equipment/RV Park Hook-Ups
Accessories. . . . . V1-**T5**-75

Cross-Reference
Metering Products. . . . . V1-**T4**-31

## D

Decorator Cover
Type CH Loadcenters and Circuit Breakers
Accessories. . . . . V1-**T1**-26

Digital Electronic Kilowatthour Meters
Marina Power and Lighting Equipment
Power Pedestals. . . . . V1-**T5**-81
RV Park Hook-Ups
Power Pedestals. . . . . V1-**T5**-44

Digital Electronic Meters
Marina Power and Lighting Equipment/RV Park Hook-Ups
Accessories. . . . . V1-**T5**-76

Direct Feed Kit
Mobile Home Panels
Accessories. . . . . V1-**T5**-23

Distribution Equipment—Ground Fault Monitor
Marina Power and Lighting Equipment
Power Pedestals. . . . . V1-**T5**-82

Distribution Equipment—MegaYacht Powerpoint
Marina Power and Lighting Equipment
Power Pedestals. . . . . V1-**T5**-83

Distribution Equipment—Panels
Marina Power and Lighting Equipment
Power Pedestals. . . . . V1-**T5**-89
Power Pedestals
RV Park Hook-Ups. . . . . V1-**T5**-49

Distribution Equipment—Substations
Marina Power and Lighting Equipment
Power Pedestals. . . . . V1-**T5**-86

Distribution Equipment—Transformers
Marina Power and Lighting Equipment
Power Pedestals. . . . . V1-**T5**-90

Distribution—Ground Fault Monitor
RV Park Hook-Ups
Power Pedestals . . . . . V1-**T5**-45

Distribution—Substations
RV Park Hook-Ups
Power Pedestals . . . . . V1-**T5**-46

Distribution—Transformers
RV Park Hook-Ups
Power Pedestals . . . . . V1-**T5**-50

Door Hasp
Marina Power and Lighting Equipment/RV Park Hook-Ups
Accessories . . . . . V1-**T5**-77

## E

Eaton Terms & Conditions . . . . . V1-**T1**-1
Freight . . . . . V1-**T1**-3
Limitation of Liability . . . . . V1-**T1**-5
Terms and Conditions of Sale . . . . . V1-**T1**-1
Terms of Payment . . . . . V1-**T1**-2
Warranty . . . . . V1-**T1**-3

Eaton's Green Line
Automatic Transfer Switches . . . . . V1-**T3**-11

Emergency Generator Panels
Manual Transfer Switches . . . . . V1-**T3**-16–V1-**T3**-18

Emergency Power Panels
Manual Transfer Switches . . . . . V1-**T3**-16

Enclosed Breakers
Loadcenters and Circuit Breakers . . . . . V1-**T1**-94–V1-**T1**-95

EUSERC Requirements Service Entrance Devices
Meter Breakers
Metering Products . . . . . V1-**T4**-48

External Cover
Marina Power and Lighting Equipment/RV Park Hook-Ups
Accessories . . . . . V1-**T5**-76

## F

Faceplate
Marina Power and Lighting Equipment/RV Park Hook-Ups
Accessories . . . . . V1-**T5**-75–V1-**T5**-77

Factory-Installed Surge Protection
Surge Protection Devices and Lightning Arresters . V1-**T2**-2, V1-**T2**-9

Field Installation and Parts
Type BR Loadcenters and Circuit Breakers
Accessories . . . . . V1-**T1**-61
Type CH Loadcenters and Circuit Breakers
Accessories . . . . . V1-**T1**-22

Filler Plates
Type BR Loadcenters and Circuit Breakers
Accessories . . . . . V1-**T1**-61

Fire Extinguisher
Marina Power and Lighting Equipment/RV Park Hook-Ups
Accessories . . . . . V1-**T5**-77

Firehouse
Marina Power and Lighting Equipment
Power Pedestals . . . . . V1-**T5**-73
RV Park Hook-Ups
Power Pedestals . . . . . V1-**T5**-42

Fluorescent Light Assembly
Marina Power and Lighting Equipment/RV Park Hook-Ups
Accessories . . . . . V1-**T5**-75

Fluorescent Light Kit
Temporary Power/RV Park
Accessories . . . . . V1-**T5**-7

Flush Flange Kit
Manual Transfer Switches . . . . . V1-**T3**-18

Flushmount Kit
Surge Protection Devices and Lightning Arresters . . . . V1-**T2**-6

Fully Automatic Transfer Switches
Automatic Transfer Switches . . . . . V1-**T3**-11

Fuse Holder
Marina Power and Lighting Equipment/RV Park Hook-Ups
Accessories . . . . . V1-**T5**-76

Fused, Unfused and Molded Case Switch
Air Conditioning Disconnects . . . . . V1-**T6**-2–V1-**T6**-10

## G

Goof Collars
Type CH Loadcenters and Circuit Breakers
Accessories . . . . . V1-**T1**-26

Ground Bar Kits
Type BR Loadcenters and Circuit Breakers
Accessories . . . . . V1-**T1**-66, V1-**T1**-93
Type CH Loadcenters and Circuit Breakers
Accessories . . . . . V1-**T1**-25

Ground Fault Receptacle
Air Conditioning Disconnects . . . . . V1-**T6**-5

Group Metering
Metering Products . . . . . V1-**T4**-88–V1-**T4**-149
Accessories . . . . . V1-**T4**-138, V1-**T4**-141
Commercial Meter Stack Modules . . . . . V1-**T4**-129
Main Service Modules . . . . . V1-**T4**-101
Main Tenant Circuit Breaker . V1-**T4**-96, V1-**T4**-98, V1-**T4**-127, V1-**T4**-136
Meter Packs . . . . . V1-**T4**-90
Phase Balanced Stack . . . . . V1-**T4**-128
Renewal Parts . . . . . V1-**T4**-140, V1-**T4**-142
Residential and Commercial Applications . . . . . V1-**T4**-88
Residential Meter Stacks . . . . . V1-**T4**-118
Surge Metering . . . . . V1-**T4**-115
Type CCV Tenant Main Circuit Breaker . . . . . V1-**T4**-95

Group Metering Inline Current Transformer Cabinets
Group Metering
Metering Products . . . . . V1-**T4**-116

## H

Handle Lockdogs
Type CH Loadcenters and Circuit Breakers
Accessories . . . . . V1-**T1**-38

Handle Lockoffs
Type BR Loadcenters and Circuit Breakers
Accessories . . . . . V1-**T1**-85

Type CH Loadcenters and Circuit Breakers
Accessories . . . . . V1-**T1**-38

Handle Ties
Accessories
Type CH Loadcenters and Circuit Breakers . . . . . V1-**T1**-38
Type BR Loadcenters and Circuit Breakers
Accessories . . . . . V1-**T1**-85

Hatteras Light
Marina Power and Lighting Equipment
Power Pedestals . . . . . V1-**T5**-69

Hold-Down Kits
Type BR Loadcenters and Circuit Breakers
Accessories . . . . . V1-**T1**-85

Hose and Cable Brackets
Marina Power and Lighting Equipment/RV Park Hook-Ups
Accessories . . . . . V1-**T5**-75

House Panels
Meter Breakers
Accessories . . . . . V1-**T4**-77
Metering Products . . . . . V1-**T4**-75


## I


Instrument Rated Sockets
Metering Products . . . . . V1-**T4**-25, V1-**T4**-26

Isolation Plate
Marina Power and Lighting Equipment/RV Park Hook-Ups
Accessories . . . . . V1-**T5**-75


## L


Lens
Marina Power and Lighting Equipment/RV Park Hook-Ups
Accessories . . . . . V1-**T5**-77

Life Ring
Marina Power and Lighting Equipment/RV Park Hook-Ups
Accessories . . . . . V1-**T5**-77

Light and Lens Assembly
Marina Power and Lighting Equipment/RV Park Hook-Ups
Accessories . . . . . V1-**T5**-75

Light Fuse
Marina Power and Lighting Equipment/RV Park Hook-Ups
Accessories . . . . . V1-**T5**-76, V1-**T5**-77

Light Holder
Marina Power and Lighting Equipment/RV Park Hook-Ups
Accessories . . . . . V1-**T5**-77

Lighthouse
Marina Power and Lighting Equipment
Power Pedestals . . . . . V1-**T5**-54

Lighthouse—SS
Marina Power and Lighting Equipment
Power Pedestals . . . . . V1-**T5**-58

Liquid Cooled Generator
Standby Generator . . . . . V1-**T3**-4

Liquid Cooled Standby
Standby Generator System . . . . . V1-**T3**-2

Loadcenter Interiors/OEM Loadcenters
Loadcenters and Circuit Breakers . . . . . V1-**T1**-89–V1-**T1**-93

Loadcenters and Circuit Breakers . V1-**T1**-1–V1-**T1**-95, V1-**T1**-97–V1-**T1**-100
Classified Circuit Breakers . . . . . V1-**T1**-96–V1-**T1**-100
Accessories . . . . . V1-**T1**-99
Type CH Replacement Breakers . . . . . V1-**T1**-97
Enclosed Breakers . . . . . V1-**T1**-94–V1-**T1**-95
Loadcenter Interiors/OEM Loadcenters . . . V1-**T1**-89–V1-**T1**-93
Type BR . . . . . V1-**T1**-42–V1-**T1**-70
Accessories . . . . . V1-**T1**-61
BR Specialty Products
BR Circuit Breakers . . . . . V1-**T1**-76
BR Quick Connect Neutral Loadcenters . . . . . V1-**T1**-57
Riser Panel . . . . . V1-**T1**-59
Spa Panels . . . . . V1-**T1**-58
Type BR Renovation Loadcenter . . . . . V1-**T1**-60
Type BR Retrofit Interior Kits . . . . . V1-**T1**-73
Common Trip Quadplex Breakers . . . . . V1-**T1**-83
Convertible Loadcenters MCB . . . . . V1-**T1**-51
Convertible Loadcenters MLO . . . . . V1-**T1**-51
Plug-On Circuit Breakers . . . . . V1-**T1**-76
Quick-Pro . . . . . V1-**T1**-60
Single-Phase . . . . . V1-**T1**-48
Three-Phase . . . . . V1-**T1**-54
Type CH . . . . . V1-**T1**-2–V1-**T1**-28
Accessories . . . . . V1-**T1**-22
CH Circuit Breakers . . . . . V1-**T1**-31
CH Specialty Products
Non-Metallic Loadcenter . . . . . V1-**T1**-21
Plug-On Neutral Loadcenter . . . . . V1-**T1**-17
Spa Panels . . . . . V1-**T1**-14
Surge Panel . . . . . V1-**T1**-15
Type CH Renovation Loadcenter . . . . . V1-**T1**-18
Type CH Retrofit Interior Kits . . . . . V1-**T1**-19
Convertible Loadcenters MCB . . . . . V1-**T1**-11
Convertible Loadcenters MLO . . . . . V1-**T1**-11
Single-Phase . . . . . V1-**T1**-7
Three-Phase . . . . . V1-**T1**-12


## M


Main and Sub-Feed Lug Blocks
Type BR Loadcenters and Circuit Breakers
Accessories . . . . . V1-**T1**-61

Main Breaker Lug Kits
Type BR Loadcenters and Circuit Breakers
Accessories . . . . . V1-**T1**-85
Type CH Loadcenters and Circuit Breakers
Accessories . . . . . V1-**T1**-38

Main Door
Marina Power and Lighting Equipment/RV Park Hook-Ups
Accessories . . . . . V1-**T5**-75, V1-**T5**-77

Main Housing
Marina Power and Lighting Equipment/RV Park Hook-Ups
Accessories . . . . . V1-**T5**-75–V1-**T5**-77

Main Lugs
Type BR Loadcenters and Circuit Breakers
Accessories . . . . . V1-**T1**-61

Main Service Modules
Group Metering
Metering Products . . . . . V1-**T4**-101

Main Tenant Circuit Breaker
Group Metering
Metering Products V1-**T4**-96, V1-**T4**-98, V1-**T4**-127, V1-**T4**-136

Manual Transfer Switches . . . . . V1-**T3**-16–V1-**T3**-19
Emergency Generator Panels . . . . . V1-**T3**-16
Emergency Power Panels . . . . . V1-**T3**-16
Generator Panels . . . . . V1-**T3**-18
Indoor and Outdoor Designs . . . . . V1-**T3**-17
Indoor and Outdoor Designs . . . . . V1-**T3**-16
Standard Manual Transfer Switch . . . . . V1-**T3**-18
Switched Neutral Manual Transfer Switch . . . . . V1-**T3**-18

Marina Power and Lighting Equipment
Power Pedestals . . . . . V1-**T5**-2, V1-**T5**-51–V1-**T5**-90
Admiral—SS . . . . . V1-**T5**-62
Digital Electronic Kilowatthour Meters . . . . . V1-**T5**-81
Distribution Equipment—Ground Fault Monitor . . . . V1-**T5**-82
Distribution Equipment—MegaYacht Powerpoint . . V1-**T5**-83
Distribution Equipment—Panels . . . . . V1-**T5**-89
Distribution Equipment—Substations . . . . . V1-**T5**-86
Distribution Equipment—Transformers . . . . . V1-**T5**-90
Firehouse . . . . . V1-**T5**-73
Hatteras Light . . . . . V1-**T5**-69
Lighthouse . . . . . V1-**T5**-54
Lighthouse—SS . . . . . V1-**T5**-58
Mariner . . . . . V1-**T5**-80
Newport Harbor Mate . . . . . V1-**T5**-65
Smart Start . . . . . V1-**T5**-79

Marina Power and Lighting Equipment/RV Park Hook-Ups
Power Pedestals
Accessories . . . . . V1-**T5**-75

Mariner
Marina Power and Lighting Equipment
Power Pedestals . . . . . V1-**T5**-80

Mechanical Interlock Cover
Metering Products
Meter Breakers . . . . . V1-**T4**-65

Mechanical Interlock Covers
Type BR Loadcenters and Circuit Breakers
Accessories . . . . . V1-**T1**-64
Type CH Loadcenters and Circuit Breakers
Accessories . . . . . V1-**T1**-23

Mechanical Interlocks
Type BR Loadcenters and Circuit Breakers
Accessories . . . . . V1-**T1**-86
Type CH Loadcenters and Circuit Breakers
Accessories . . . . . V1-**T1**-23, V1-**T1**-38

Mechanical Lugs
Metering Products . . . . . V1-**T4**-34

Meter Breakers
Metering Products . . . . . V1-**T4**-37–V1-**T4**-87
Accessories . . . . . V1-**T4**-77
Aluminum Meter Breakers . . . . . V1-**T4**-87
CH Style Renovation Solutions . . . . . V1-**T4**-86
Commercial Safety Sockets . . . . . V1-**T4**-83
EUSERC Requirements Service Entrance Devices . V1-**T4**-48
House Panels . . . . . V1-**T4**-75
Mechanical Interlock Cover . . . . . V1-**T4**-65
Non-EUSERC Combination Service Entrance Devices . V1-**T4**-39
Residential Meter Breakers . . . . . V1-**T4**-37
West Coast All-In-One Design . . . . . V1-**T4**-59

Meter Packs
Group Metering
Metering Products . . . . . V1-**T4**-90

Metering Products . . . . . V1-**T4**-1–V1-**T4**-149
Commercial Lever Bypass Sockets . . . . . V1-**T4**-10–V1-**T4**-17
Communications Grounding Device . . . . . V1-**T4**-35, V1-**T4**-36
Cross-Reference . . . . . V1-**T4**-31
Group Metering . . . . . V1-**T4**-88–V1-**T4**-149
Accessories. . . V1-**T4**-117, V1-**T4**-138, V1-**T4**-139, V1-**T4**-141
Commercial Meter Stack Modules . . . . . V1-**T4**-129
Group Metering Inline Current Transformer Cabinets . V1-**T4**-116
Main Service Modules . . . . . V1-**T4**-101
Main Tenant Circuit Breaker . V1-**T4**-96, V1-**T4**-98, V1-**T4**-127, V1-**T4**-136
Meter Packs . . . . . V1-**T4**-90
Phase Balanced Stack . . . . . V1-**T4**-128
Renewal Parts . . . . . V1-**T4**-140, V1-**T4**-142
Residential and Commercial Applications . . . . . V1-**T4**-88
Residential Meter Stacks . . . . . V1-**T4**-118
Surge Metering . . . . . V1-**T4**-115
Type CCV Tenant Main Circuit Breaker . . . . . V1-**T4**-95
Instrument Rated Sockets . . . . . V1-**T4**-25, V1-**T4**-26
Mechanical Lugs . . . . . V1-**T4**-34
Meter Breakers . . . . . V1-**T4**-37–V1-**T4**-87
Accessories . . . . . V1-**T4**-77
Aluminum Meter Breakers . . . . . V1-**T4**-87
CH Style Renovation Solutions . . . . . V1-**T4**-86
Commercial Safety Sockets . . . . . V1-**T4**-83
EUSERC Requirements Service Entrance Devices . . V1-**T4**-48
House Panels . . . . . V1-**T4**-75
Mechanical Interlock Cover . . . . . V1-**T4**-65
Non-EUSERC Combination Service Entrance Devices . V1-**T4**-39
Residential Meter Breakers . . . . . V1-**T4**-37
West Coast All-In-One Design . . . . . V1-**T4**-59
Meter Socket Accessories
Accessories . . . . . V1-**T4**-30
Multiple Position Horizontal Ganged Sockets . V1-**T4**-18–V1-**T4**-24
Residential Pedestals . . . . . V1-**T4**-27, V1-**T4**-28
Single Meter Sockets . . . . . V1-**T4**-2–V1-**T4**-9
Residential Ringless Type Cover . . . . . V1-**T4**-4

Mobile Home Panels
Accessories
Power Pedestals . . . . . V1-**T5**-23
Power Pedestals . . . . . V1-**T5**-2, V1-**T5**-21–V1-**T5**-27

Molded Case Switch
Air Conditioning Disconnects . . . . . V1-**T6**-2, V1-**T6**-4

Mounting Bases
Type CH Loadcenters and Circuit Breakers
Accessories . . . . . V1-**T1**-38

Mounting Brackets
Marina Power and Lighting Equipment/RV Park Hook-Ups
Accessories . . . . . V1-**T5**-77

Mounting Feet
Marina Power and Lighting Equipment/RV Park Hook-Ups
Accessories . . . . . V1-**T5**-76

Multiple Position Horizontal Ganged Sockets
Metering Products . . . . . V1-**T4**-18–V1-**T4**-24

## N

Neutral Bar Accessories
Type CH Loadcenters and Circuit Breakers
Accessories . . . . . V1-**T1**-25

Newport Camp Mate Power Pedestal
RV Park Hook-Ups
Power Pedestals . . . . . V1-**T5**-36

Newport Harbor Mate
Marina Power and Lighting Equipment
Power Pedestals . . . . . V1-**T5**-65

Non-EUSERC Combination Service Entrance Devices
Metering Products
Meter Breakers . . . . . V1-**T4**-39

Non-Metallic Loadcenter
CH Specialty Products
Type CH
Loadcenters and Circuit Breakers . . . . . V1-**T1**-21

## O

Outdoor Communication Grounding Device
Surge Protection Devices and Lightning Arresters . . . . V1-**T2**-6

## P

Padlock Brackets
Type BR Loadcenters and Circuit Breakers
Accessories . . . . . V1-**T1**-86

Padmount Adapter
Mobile Home Panels
Accessories . . . . . V1-**T5**-23

Pad-Mount Bracket
Temporary Power/RV Park
Accessories . . . . . V1-**T5**-7

Park Light Power Pedestal
RV Park Hook-Ups
Power Pedestals . . . . . V1-**T5**-39

Pedestal Extension
Mobile Home Panels
Accessories . . . . . V1-**T5**-23
Temporary Power/RV Park
Accessories . . . . . V1-**T5**-7

Pedestal Units
Temporary Power/RV Park
Power Pedestals . . . . . V1-**T5**-16

Phase Adapters
Type CH Loadcenters and Circuit Breakers
Accessories . . . . . V1-**T1**-25

Phase Balanced Stack
Group Metering
Metering Products . . . . . V1-**T4**-128

Phone, Cable, Internet Assemblies
Marina Power and Lighting Equipment/RV Park Hook-Ups
Accessories. . . . . V1-**T5**-76

Plug-On Circuit Breakers
Type BR
Loadcenters and Circuit Breakers . . . . . V1-**T1**-76

Plug-On Neutral Loadcenter
CH Specialty Products
Type CH
Loadcenters and Circuit Breakers . . . . . V1-**T1**-17

Plug-On Surge Protection
Surge Protection Devices and Lightning Arrester . . . . . V1-**T2**-3

Portable Generators
Residential Standby Backup Power Solutions V1-**T3**-7–V1-**T3**-10

Power Inlet Box
Manual Transfer Switches . . . . . V1-**T3**-18

Power Outlet Panels
Power Pedestals . . . . . V1-**T5**-2

Power Pedestals . . . . . V1-**T5**-1–V1-**T5**-90
Marina Power and Lighting Equipment . V1-**T5**-2, V1-**T5**-51–V1-**T5**-90
Admiral—SS . . . . . V1-**T5**-62
Digital Electronic Kilowatthour Meters . . . . . V1-**T5**-81
Distribution Equipment—Ground Fault Monitor . . . . V1-**T5**-82
Distribution Equipment—MegaYacht Powerpoint . . V1-**T5**-83
Distribution Equipment—Panels . . . . . V1-**T5**-89
Distribution Equipment—Substations. . . . . V1-**T5**-86
Distribution Equipment—Transformers . . . . . V1-**T5**-90
Firehouse . . . . . V1-**T5**-73
Hatteras Light . . . . . V1-**T5**-69
Lighthouse . . . . . V1-**T5**-54
Lighthouse—SS . . . . . V1-**T5**-58
Mariner . . . . . V1-**T5**-80
Newport Harbor Mate. . . . . V1-**T5**-65
Smart Start . . . . . V1-**T5**-79
Marina Power and Lighting Equipment/RV Park Hook-Ups
Accessories. . . . . V1-**T5**-75
Mobile Home Panels . . . . . V1-**T5**-2, V1-**T5**-21–V1-**T5**-27
Accessories. . . . . V1-**T5**-23
Power Outlet Panels . . . . . V1-**T5**-2
RV Park Hook-Ups . . . . . V1-**T5**-28–V1-**T5**-50
Digital Electronic Kilowatthour Meters . . . . . V1-**T5**-44
Distribution Equipment—Panels . . . . . V1-**T5**-49
Distribution—Ground Fault Monitor . . . . . V1-**T5**-45
Distribution—Substations . . . . . V1-**T5**-46
Distribution—Transformers. . . . . V1-**T5**-50
Firehouse . . . . . V1-**T5**-42
Newport Camp Mate Power Pedestal . . . . . V1-**T5**-36
Park Light Power Pedestal . . . . . V1-**T5**-39
Powerhouse Power Pedestal . . . . . V1-**T5**-30
Powerhouse Stainless Steel Power Pedestal. . . . . V1-**T5**-33
Temporary Power/RV Park. . . . . V1-**T5**-3–V1-**T5**-20
Accessories. . . . . V1-**T5**-7
Pedestal Units. . . . . V1-**T5**-16
Surface Units . . . . . V1-**T5**-10

Powerhouse Power Pedestal
RV Park Hook-Ups
Power Pedestals . . . . . V1-**T5**-30

Powerhouse Stainless Steel Power Pedestal
RV Park Hook-Ups
Power Pedestals . . . . . V1-**T5**-33

Pullouts, Fused and Non-Fused
Air Conditioning Disconnects . . . . . V1-**T6**-2, V1-**T6**-4

## Q

Quick Connect Design
Surge Protection Devices and Lightning Arresters . . . . V1-**T2**-6

Quick-Pro
Type BR
Loadcenters and Circuit Breakers . . . . . V1-**T1**-60

## R

Rainproof Conduit Hub
Temporary Power/RV Park
Accessories . . . . . V1-**T5**-7

Rainproof Conduit Hubs
Type BR Loadcenters and Circuit Breakers
Accessories . . . . . V1-**T1**-66
Type CH Loadcenters and Circuit Breakers
Accessories . . . . . V1-**T1**-25

Raintight Enclosure
Surge Protection Devices and Lightning Arresters . . . . V1-**T2**-6

Receptacles
Marina Power and Lighting Equipment/RV Park Hook-Ups
Accessories . . . . . V1-**T5**-75

Renewal Parts
Group Metering
Metering Products . . . . . V1-**T4**-140, V1-**T4**-142
Temporary Power/RV Park
Accessories . . . . . V1-**T5**-8

Residential and Commercial Applications
Group Metering
Metering Products . . . . . V1-**T4**-88

Residential Meter Breakers
Meter Breakers
Metering Products . . . . . V1-**T4**-37

Residential Meter Stacks
Group Metering
Metering Products . . . . . V1-**T4**-118

Residential Pedestals
Metering Products . . . . . V1-**T4**-27, V1-**T4**-28

Residential Ringless Type Cover
Single Meter Sockets
Metering Products . . . . . V1-**T4**-4

Residential Standby Backup Power Solutions. . . . V1-**T3**-1–V1-**T3**-15
Automatic Transfer Switches . . . . . V1-**T3**-11–V1-**T3**-15
Manual Transfer Switches . . . . . V1-**T3**-16–V1-**T3**-19
Portable Generators . . . . . V1-**T3**-7–V1-**T3**-10
Standby Generator . . . . . V1-**T3**-2–V1-**T3**-6

Riser Panel
BR Specialty Products
Type BR
Loadcenters and Circuit Breakers . . . . . V1-**T1**-59

RV Park Hook-Ups
Power Pedestals . . . . . V1-**T5**-28–V1-**T5**-50
Digital Electronic Kilowatthour Meters . . . . . V1-**T5**-44
Distribution Equipment—Panels. . . . . V1-**T5**-49
Distribution—Ground Fault Monitor . . . . . V1-**T5**-45
Distribution—Substations . . . . . V1-**T5**-46
Distribution—Transformers. . . . . V1-**T5**-50
Firehouse . . . . . V1-**T5**-42
Newport Camp Mate Power Pedestal . . . . . V1-**T5**-36
Park Light Power Pedestal . . . . . V1-**T5**-39
Powerhouse Power Pedestal . . . . . V1-**T5**-30
Powerhouse Stainless Steel Power Pedestal. . . . . V1-**T5**-33

## S

Safety Sockets, Commercial
Meter Breakers
Metering Products . . . . . V1-**T4**-83

Service Entrance Surge Protection
Surge Protection Devices and Lightning Arresters . . . . V1-**T2**-2

Shunt Trip
Type BR Loadcenters and Circuit Breakers
Accessories. . . . . V1-**T1**-86
Type CH Loadcenters and Circuit Breakers
Accessories. . . . . V1-**T1**-39

Single Meter Sockets
Metering Products. . . . . V1-**T4**-2–V1-**T4**-9
Residential Ringless Type Cover. . . . . V1-**T4**-4

Single-Phase
Type BR
Loadcenters and Circuit Breakers. . . . . V1-**T1**-48
Type CH
Loadcenters and Circuit Breakers. . . . . V1-**T1**-7

Smart Start
Marina Power and Lighting Equipment
Power Pedestals. . . . . V1-**T5**-79

Spa Panels
BR Specialty Products
Type BR
Loadcenters and Circuit Breakers . . . . . V1-**T1**-58
CH Specialty Products
Type CH
Loadcenters and Circuit Breakers . . . . . V1-**T1**-14
Type BR. . . . . V1-**T1**-58

Spring Closure
Marina Power and Lighting Equipment/RV Park Hook-Ups
Accessories. . . . . V1-**T5**-75

Standard Manual Transfer Switch
Manual Transfer Switches. . . . . V1-**T3**-18

Standby Generator. . . . . V1-**T3**-2–V1-**T3**-6
Air Cooled Generators . . . . . V1-**T3**-3
Liquid Cooled Generators . . . . . V1-**T3**-4

Standby Generator System
Air Cooled Standby . . . . . V1-**T3**-2
Liquid Cooled Standby. . . . . V1-**T3**-2

Strobe Light
Marina Power and Lighting Equipment/RV Park Hook-Ups
Accessories . . . . . V1-**T5**-77

Surface Units
Temporary Power/RV Park
Power Pedestals . . . . . V1-**T5**-10

Surge Installed Loadcenters
Surge Protection Devices and Lightning Arrester . . . . . V1-**T2**-9

Surge Metering
Group Metering
Metering Products . . . . . V1-**T4**-115

Surge Panel
CH Specialty Products
Type CH
Loadcenters and Circuit Breakers . . . . . V1-**T1**-15

Surge Protection . . . . . V1-**T2**-1–V1-**T2**-10
Factory-Installed Surge Protection . . . . . V1-**T2**-2, V1-**T2**-9
Plug-On Surge Protection . . . . . V1-**T2**-3
Type 3 Point-of-Use Surge Protection . . . . . V1-**T2**-3
Type BRSURGE . . . . . V1-**T2**-3
Type BRSURGECSA. . . . . V1-**T2**-3
Type CHQSA . . . . . V1-**T2**-3
Type CHSA. . . . . V1-**T2**-3
Service Entrance . . . . . V1-**T2**-2
Surge Installed Loadcenters . . . . . V1-**T2**-9
Surge Protection Devices and Lightning Arresters . V1-**T2**-2–V1-**T2**-10
Surge Ready Loadcenter. . . . . V1-**T2**-2, V1-**T2**-9
Two-Stage Protection . . . . . V1-**T2**-2, V1-**T2**-3
UL 1449 3rd Edition Surge Protection
Type 1. . . . . V1-**T2**-2
Type 1 CHSP . . . . . V1-**T2**-4
Type 2. . . . . V1-**T2**-2
Type 2 Plug-On. . . . . V1-**T2**-10
UL 1449 3rd Edition, cUL
Type 2 CHSP Service Entrance . . . . . V1-**T2**-5

Surge Protection Devices and Lightning Arresters V1-**T2**-2–V1-**T2**-10
Surge Protection Receptacles with LED Indicators and Audible Alarm . . . . . V1-**T2**-8
Type BR and CH Surge Breakers . . . . . V1-**T2**-7

Surge Protection Receptacles with LED Indicators and Audible Alarm
Surge Protection Devices and Lightning Arresters . . . . V1-**T2**-8

Surge Ready
Type CH
Loadcenters and Circuit Breakers . . . . . V1-**T1**-16

Surge Ready Loadcenter. . . . . V1-**T2**-9
Surge Protection Devices and Lightning Arresters . . . . V1-**T2**-2

Switched Neutral Manual Transfer Switch
Manual Transfer Switches . . . . . V1-**T3**-18


## T


Temporary Power/RV Park
Power Pedestals . . . . . V1-**T5**-3–V1-**T5**-20
Accessories . . . . . V1-**T5**-7
Pedestal Units . . . . . V1-**T5**-16
Surface Units . . . . . V1-**T5**-10

Three-Phase
Type BR
Loadcenters and Circuit Breakers . . . . . V1-**T1**-54
Type CH
Loadcenters and Circuit Breakers . . . . . V1-**T1**-12

Transfer Panels
Manual Transfer Switches . . . . . V1-**T3**-16

Two-Stage Protection
Surge Protection Devices and Lightning Arresters V1-**T2**-2, V1-**T2**-3

Type 1 Surge Protective Device
Surge Protection Devices and Lightning Arresters . . . . V1-**T2**-2

Type 2 Surge Protective Device
Surge Protection Devices and Lightning Arresters . . . . V1-**T2**-2

Type 3 Point-of-Use Surge Protection
Surge Protection Devices and Lightning Arresters . . . . V1-**T2**-3

Type BR
Loadcenters and Circuit Breakers . . . . . V1-**T1**-42–V1-**T1**-70
Accessories. . . . . V1-**T1**-61
BR Specialty Products
BR Circuit Breakers . . . . . V1-**T1**-76
BR Quick Connect Neutral Loadcenters. . . . . V1-**T1**-57
Riser Panel . . . . . V1-**T1**-59
Spa Panels . . . . . V1-**T1**-58
Type BR Renovation Loadcenter . . . . . V1-**T1**-60
Type BR Retrofit Interior Kits . . . . . V1-**T1**-73
Common Trip Quadplex Breakers. . . . . V1-**T1**-83
Convertible Loadcenters MCB . . . . . V1-**T1**-51
Convertible Loadcenters MLO . . . . . V1-**T1**-51
Plug-On Circuit Breakers. . . . . V1-**T1**-76
Quick-Pro . . . . . V1-**T1**-60
Single-Phase . . . . . V1-**T1**-48
Spa Panels . . . . . V1-**T1**-58
Three-Phase . . . . . V1-**T1**-54

Type BR and CH Surge Breakers
Surge Protection Devices and Lightning Arresters . . . . V1-**T2**-7

Type BR Renovation Loadcenter
BR Specialty Products
Type BR
Loadcenters and Circuit Breakers . . . . . V1-**T1**-60

Type BR Retrofit Interior Kits
BR Specialty Products
Type BR
Loadcenters and Circuit Breakers . . . . . V1-**T1**-73

Type BRSURGE Surge Protection
Surge Protection Devices and Lightning Arresters . . . . V1-**T2**-3

Type CCV Tenant Main Circuit Breaker
Group Metering
Metering Products . . . . . V1-**T4**-95

Type CH. . . . . V1-**T1**-16
Loadcenters and Circuit Breakers . . . . . V1-**T1**-2–V1-**T1**-28
Accessories. . . . . V1-**T1**-22
CH Circuit Breakers. . . . . V1-**T1**-31
CH Specialty Products
Non-Metallic Loadcenter . . . . . V1-**T1**-21
Plug-On Neutral Loadcenter. . . . . V1-**T1**-17
Spa Panels . . . . . V1-**T1**-14

Surge Panel . . . . . V1-**T1**-15
Type CH Renovation Loadcenter . . . . . V1-**T1**-18
Type CH Retrofit Interior Kits . . . . . V1-**T1**-19
Convertible Loadcenters MCB . . . . . V1-**T1**-11
Convertible Loadcenters MLO . . . . . V1-**T1**-11
Single-Phase . . . . . V1-**T1**-7
Surge Ready . . . . . V1-**T1**-16
Three-Phase . . . . . V1-**T1**-12

Type CH Renovation Loadcenter
CH Specialty Products
Type CH
Loadcenters and Circuit Breakers . . . . . V1-**T1**-18

Type CH Replacement Breakers
Classified Circuit Breakers
Loadcenters and Circuit Breakers . . . . . V1-**T1**-97

Type CH Retrofit Interior Kits
CH Specialty Products
Type CH
Loadcenters and Circuit Breakers . . . . . V1-**T1**-19

Type CHQSA Surge Protection
Surge Protection Devices and Lightning Arresters . . . . V1-**T2**-3

Type CHSA Surge Protection
Surge Protection Devices and Lightning Arresters . . . . V1-**T2**-3

## U

UL 1449 3rd Edition
Surge Protection Devices and Lightning Arrester . . . . . V1-**T2**-2

## W

Water Assemblies
Marina Power and Lighting Equipment/RV Park Hook-Ups
Accessories . . . . . V1-**T5**-76

West Coast All-In-One Design
Meter Breakers
Accessories . . . . . V1-**T4**-60
Metering Products . . . . . V1-**T4**-59

## Numerics

3-Pack
Surge Protection Devices and Lightning Arresters V1-**T2**-6

Electrical Sector Solutions

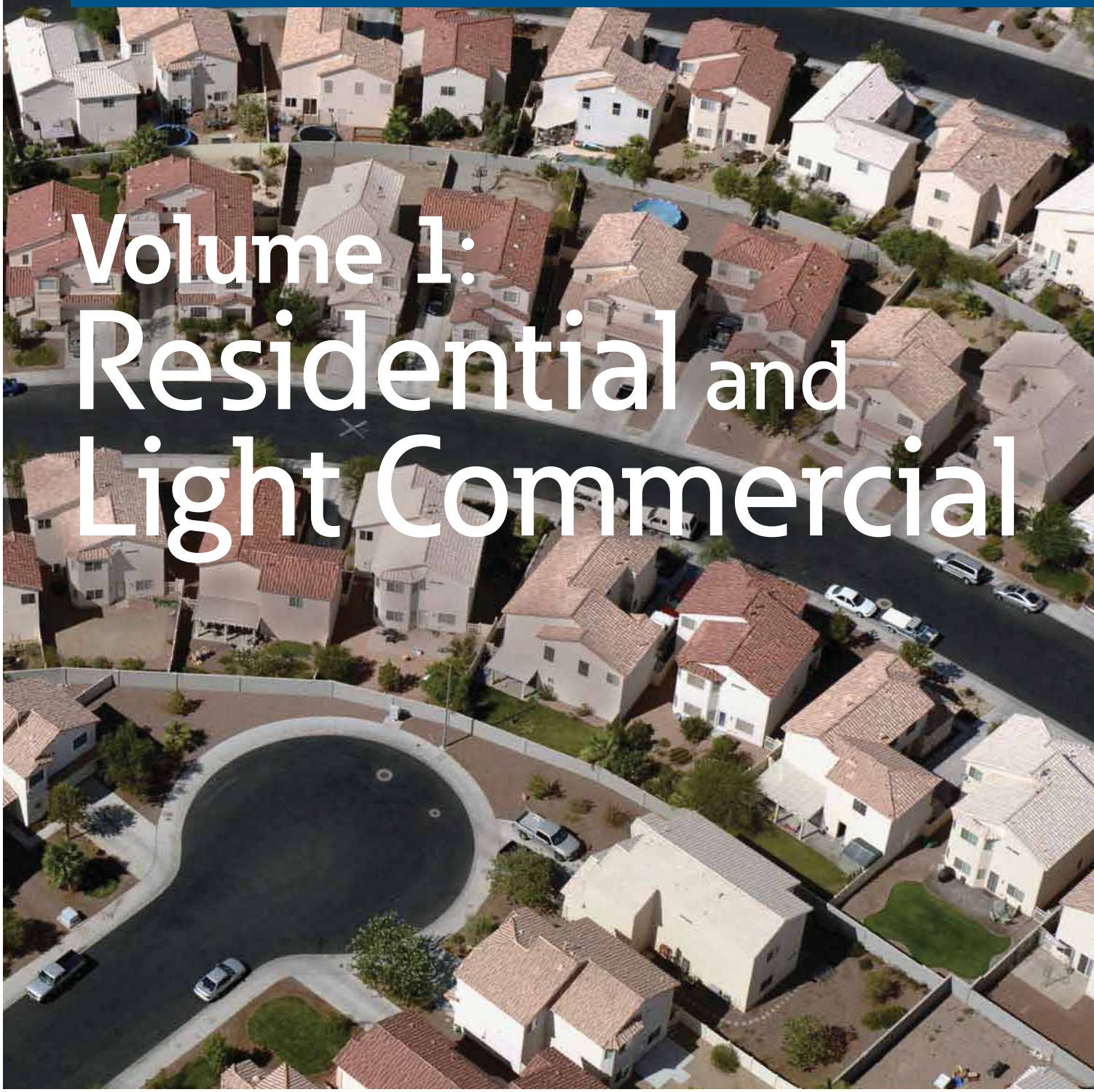

# Volume 1: Residential and Light Commercial

Powering Business Worldwide

# Volume 1—Residential and Light Commercial

1


Tab 1—Loadcenters and Circuit Breakers . . . . . V1-T1-1

Tab 2—Surge Protection . . . . . V1-T2-1

Tab 3—Residential Standby Backup Power Solutions . . . . . V1-T3-1

Tab 4—Metering Products . . . . . V1-T4-1

Tab 5—Power Pedestals . . . . . V1-T5-1

Tab 6—Air Conditioning Disconnects . . . . . V1-T6-1

Appendix 1—Eaton Terms & Conditions . . . . . V1-A1-1

Appendix 2—Catalog Parent Number Index . . . . . V1-A2-1

Appendix 3—Alphabetical Product Index . . . . . V1-A3-1

# Copyright

## Dimensions, Weights and Ratings

Dimensions, weights and ratings given in this catalog **are approximate and should not be used for construction purposes**. Drawings containing exact dimensions are available upon request. All listed product specifications and ratings are subject to change without notice. Photographs are representative of production units.

## Terms and Conditions

All prices and discounts are subject to change without notice. When price changes occur, they are published in Eaton's *Price and Availability Digest* (PAD). All orders accepted by Eaton's Electrical Sector are subject to the general terms and conditions as set forth in Appendix 1—Eaton Terms & Conditions.

## Technical and Descriptive Publications

This catalog contains brief technical data for proper selection of products. Further information is available in the form of technical information publications and illustrated brochures. If additional product information is required, contact your local Eaton Products Distributor, call **1-800-525-2000** or visit our website at **www.eaton.com**.

## Compliance with Nuclear Regulation 10 CFR 21

Eaton products are sold as commercial grade products not intended for application in facilities or activities licensed by the United States Nuclear Regulatory Commission for atomic purposes, under 10 CFR 21. Further certification will be required for use of these products in a safety-related application in any nuclear facility licensed by the U.S. Nuclear Regulatory Commission.

## WARNING

The installation and use of Eaton products should be in accordance with the provisions of the U.S. National Electrical Code® and/or other local codes or industry standards that are pertinent to the particular end use. Installation or use not in accordance with these codes and standards could be hazardous to personnel and/or equipment.

These catalog pages do not purport to cover all details or variations in equipment, nor to provide for every possible contingency to be met in connection with installation, operation or maintenance. Should further information be desired or should particular problems arise which are not covered sufficiently for the purchaser's purposes, the matter should be referred to the local Eaton Products Distributor or Sales Office. The contents of this catalog shall not become part of or modify any prior or existing agreement, commitment or relationship. The sales contract contains the entire obligation of Eaton's Electrical Sector. The warranty contained in the contract between the parties is the sole warranty of Eaton. Any statements contained herein do not create new warranties or modify the existing warranty.

**Copyright ©2015 Eaton, All Rights Reserved.**

Powering Business Worldwide

**Eaton is a global leader in power distribution, power quality, control and automation, and monitoring products.**

At Eaton, we believe a reliable, efficient and safe power system is the foundation of every successful enterprise. Through innovative technologies, cutting-edge products and our highly skilled services team, we empower businesses around the world to achieve a powerful advantage.

In addition, Eaton is committed to creating and maintaining powerful customer relationships built on a foundation of excellence. From the products we manufacture to our dedicated customer service and support, we know what's important to you.

## Solutions

Eaton takes the complexity out of power systems management with a holistic and strategic approach, leveraging our industry-leading technology, solutions and services. We focus on the following three areas in all we do:

- Reliability—maintain the appropriate level of power continuity without disruption or unexpected downtime
- Efficiency—minimize energy usage, operating costs, equipment footprint and environmental impact
- Safety—identify and mitigate electrical hazards to protect what you value most

## Using the Eaton Catalog Library

As we grow, it becomes increasingly difficult to include all products in one or two comprehensive catalogs. Knowing that each user has their specific needs, we have created a library of catalogs for our products that when complete, will contain 15 volumes. Since the volumes will continuously be a work in progress and updated, each volume will stand alone. Refer to our volume directory, MZ08100001E, for a quick glance of where to look for the products you need. The 15 volumes include:

- Volume 1—Residential and Light Commercial (CA08100002E)
- Volume 2—Commercial Distribution (CA08100003E)
- Volume 3—Power Distribution and Control Assemblies (CA08100004E)
- Volume 4—Circuit Protection (CA08100005E)
- Volume 5—Motor Control and Protection (CA08100006E)
- Volume 6—Solid-State Motor Control (CA08100007E)
- Volume 7—Logic Control, Operator Interface and Connectivity Solutions (CA08100008E)
- Volume 8—Sensing Solutions (CA08100010E)
- Volume 9—Original Equipment Manufacturer (CA08100011E)
- Volume 10—Enclosed Control (CA08100012E)
- Volume 11—Vehicle and Commercial Controls (CA08100013E)
- Volume 12—Aftermarket, Renewal Parts and Life Extension Solutions (CA08100014E)
- Volume 13—Counters, Timers and Tachometers (CA08100015E)—Available in electronic format only
- Volume 14—Fuses (CA08100016E)—Available in electronic format only
- Volume 15—Solar Inverters and Electrical Balance of System (CA08100018E)

These volumes are not all-inclusive of every product, but they are meant to be an overview of our product lines. For our full range of product solutions and additional product information, consult Eaton.com/electrical and other catalogs and product guides in our literature library. These references include:

- The Consulting Application Guide (CA08104001E)
- The Eaton Power Quality Product Guide (COR01FYA)

If you don't have the volume that contains the product or information that you are looking for, not to worry. You can access every volume of the catalog library at Eaton.com/electrical in the Literature Library.

By installing our Automatic Tab Updater (ATU), you can be sure you always have the most recent version of each volume and tab.

## Icons

### Green Leaf

Eaton Green Solutions are products, systems or solutions that represent Eaton benchmarks for environmental performance. The green leaf symbol is our promise that the solution has been reviewed and documented as offering exceptional, industry-leading environmental benefits to customers, consumers and our communities. Though all of Eaton's products and solutions are designed to meet or exceed applicable government standards related to protecting the environment, our products with the Green Leaf designation further provide "exceptional environmental benefit."

### Learn Online

When you see the Learn Online icon, go to Eaton.com/electrical and search for the product or training page. There you will find 100-level training courses, podcasts, webcasts or games and puzzles to learn more.

### Drawings Online

When you see the Drawings Online icon, go to Eaton.com/electrical and find the products page. There you will find a tab that includes helpful product drawings and illustrations.

## Contact Us

If you need additional help, you can find contact information under the Customer Care heading of Eaton.com/electrical.

# Loadcenters and Circuit Breakers



Residential Loadcenters and Breaker Family

## 1.1 Type CH Loadcenters and Circuit Breakers

Overview . . . . . V1-T1-2
Single-Phase . . . . . V1-T1-7
Three-Phase . . . . . V1-T1-12
CH Specialty Products . . . . . V1-T1-14
Spa Panels . . . . . V1-T1-14
Surge Panel . . . . . V1-T1-15
Plug-On Neutral Loadcenter . . . . . V1-T1-17
Type CH Renovation Loadcenter . . . . . V1-T1-18
Type CH Retrofit Interior Kits . . . . . V1-T1-19
Non-Metallic Loadcenter . . . . . V1-T1-21
CH Circuit Breakers . . . . . V1-T1-31

## 1.2 Type BR Loadcenters and Circuit Breakers

Overview . . . . . V1-T1-42
Single-Phase . . . . . V1-T1-48
Three-Phase . . . . . V1-T1-54
BR Specialty Products . . . . . V1-T1-57
BR Quick Connect Neutral Loadcenters . . . . . V1-T1-57
Spa Panels . . . . . V1-T1-58
Riser Panel . . . . . V1-T1-59
Type BR Renovation Loadcenter . . . . . V1-T1-60
Type BR Retrofit Interior Kits . . . . . V1-T1-73
BR Circuit Breakers . . . . . V1-T1-76

## 1.3 Loadcenter Interiors/OEM Loadcenters

Product Description . . . . . V1-T1-89
Standards and Certifications . . . . . V1-T1-90
Product Selection . . . . . V1-T1-90

## 1.4 Enclosed Breakers

Product Overview . . . . . V1-T1-94
Product Description . . . . . V1-T1-94
Standards and Certifications . . . . . V1-T1-94
Product Selection . . . . . V1-T1-95
Dimensions . . . . . V1-T1-95

## 1.5 Classified Circuit Breakers

Product Description . . . . . V1-T1-96
Product Selection . . . . . V1-T1-97
Accessories . . . . . V1-T1-99
Technical Data . . . . . V1-T1-99
Wiring Diagrams . . . . . V1-T1-100


Learn Online

**Eaton Type CH Convertible Family**

## Contents


| *Description* | *Page* |
|---|---|
| Overview | |
| Product Description | **V1-T1-3** |
| Features, Benefits and Functions | **V1-T1-3** |
| Standards and Certifications | **V1-T1-4** |
| Catalog Number Selection | **V1-T1-6** |
| Product Selection | **V1-T1-7** |
| Technical Data and Specifications | **V1-T1-29** |
| CH Specialty Products | **V1-T1-14** |
| CH Loadcenter Options and Accessories | **V1-T1-22** |
| CH Circuit Breakers | **V1-T1-31** |


# Overview

## Product Selection Guide

### CH Loadcenters

| Description | |
|---|---|
| **Service** | |
| Single-phase, three-wire, 120/240 Vac | Three-phase, four-wire, 208Y/120 Vac |
| Three-phase, three-wire, 240 V corner grounded delta | Three-phase, three-wire, 240 Vac delta |
| **Short-Circuit Current Rating** | |
| 10 kAIC: All single- and three-phase loadcenters 40–400 A, 2–42 circuits except when series ratings are applied | 35 kAIC available on convertible units using CSH main breaker |
| 25 kAIC: All factory-installed main breakers single-phase loadcenters rated 150–225 A using Type CSR main breakers | 42 and 100 kAIC are available on some styles: single-phase and three-phase |
| **Main Breaker/Main Lug Loadcenters** | |
| Single-phase | Three-phase |
| Main breaker: 100, 125, 150, 200, 225, 400 A | Main breaker: 150, 200, 225, 300, 400 A |
| Main lugs: 40, 70, 125, 150, 200, 225, 400 A | Main lugs: 125, 150, 200, 225, 400 A |
| **Convertible Loadcenters** | |
| Main breaker or main lugs: single-phase up to 225 A | |
| **Branch Breakers** | |
| Type CH: 10–150 A. Single-, two- and three-pole. Selected amperages available in shunt trip, HACR and switching duty | Type CH-AFCI arc fault circuit interrupter |
| Ground fault circuit interruptors: 15–60 A | Type CHP: 10–125 A. Single-, two- and three-pole. three-position commercial trip |
| Type CH-HID: 15–30 A. Single-, two- and three-pole | Selected amperages available in HACR switching duty |
| CH-HM high magnetic | Type CHP-HID: 15–30 A. Single-, two- and three-pole |
| CH-M50 high ambient | Type CHP-GFCI: 15–30 A. Single-pole ground fault breakers |
| **Enclosures** | |
| NEMA® Type 1 indoor | NEMA Type 3R outdoor |
| **Loadcenter and Breaker Accessories** | |
| Branch circuit breaker: | Complete line of ground bar kits 5, 10, 14 and 21 circuits, some with additional #2/0 lugs |
| Auxiliary components | Each terminal will accommodate: (3) #14–#10 Cu/Al or (1) #14–#4 Cu/Al |
| Hold-down kits | Sub-feed lugs 125, 150 A—two- and three-pole |
| Handle ties | Shunt trips |
| Lockoffs | Universal rainproof conduit hubs Group One: 3/4, 1, 1-1/4, 1-1/2, 2 inches (19.1, 25.4, 31.8, 38.1, 50.8 mm) Group Two: 2, 2-1/2, 3 inches (50.8, 63.5, 76.2 mm) |
| Lockdogs | Adapter plate |
| **Bussing** | |
| Silver flash plated copper bus is a standard feature | |

## Product Description

Loadcenters are enclosures specifically designed to house the branch circuit breakers and wiring required to distribute power to individual circuits. They contain either a main breaker when used at the service entrance point or a main lug when used as a sub-panel to add circuits to existing service. The main breaker protects the main entire panel and can be used as a service disconnect. The branch breakers protect the wires leading to individual electrical loads such as fixtures and outlets.

## Features, Benefits and Functions

### *Loadcenter Construction*

Eaton's Type CH loadcenters feature silver flash plated copper bus in all interiors. Stabs are rated 200 A throughout the CH line. Therefore, the sum of the handle ratings connected to any one stab is limited to 200 A maximum. NEMA 1 boxes are manufactured from cold rolled 16 gauge sheet steel. Raintight boxes are manufactured from galvanized steel. All boxes and trims are finished using an electrostatic powder coat, baked urethane paint process.

### *Neutrals*

Eaton Type CH loadcenters feature two types of neutrals:

### *Insulated/Bondable Split Neutral*

Panels are supplied with split insulated neutrals with an insulated cross strap. For service entrance applications, the neutral must be bonded by using the bonding strap supplied with the panel. For non-service entrance (sub-panel) applications, the panel may be installed with the bonding strap not connected to the neutral. Separate ground bars must be used on non-service entrance panels.

### *Insulated/Bondable Single Neutral*

Panels are supplied with a single insulated neutral. For service entrance applications, all that is required to bond the neutral is to loosen the bonding screw and the neutral screw directly beside it, insert the bonding strap into the neutral bar, and re-tighten both connections. The single neutral can be moved by the contractor to the other side of the panel, if desired. When used as a service entrance panel, unused neutral connections may be used for the termination of equipment grounds. For non-service entrance (sub-panel) applications, the panel may be installed with the bonding strap not connected to the neutral. Separate ground bars must be used on non-service entrance panels.

### *Inboard Plug-On Neutral*

Code changes and higher safety standards are leading to more arc fault circuit interrupter (AFCI) installations. With the electrical contractor in mind, Eaton has revolutionized the way Combination AFCIs are installed with the Plug-on Neutral line of loadcenters and breakers. This unique product solution enables the contractor to connect the breaker directly to the neutral bar, eliminating the need for wiring a pigtail.

### *Grounds*

In service entrance applications where the neutral is bonded, unused neutral holes may be used for terminating ground conductors. In sub-feed panels, the neutral must be isolated (non-bonded), and ground wires must be terminated on a separate ground bar.

The insulated/bondable single/split neutral panels have sufficient terminations for both ground and neutral conductors. The insulated/bondable single split neutral panels are supplied with a separate factory-installed ground bar if the catalog number contains a "G." If not, a separate ground bar should be installed. Insulated/Bondable Single Neutral panels are supplied without a ground bar (unless otherwise noted), and ground bar kits, if needed, must be purchased separately.

1

## Standards and Certifications

### *UL® Listings*

All Eaton Type CH loadcenters are listed under UL File E8741.

### *Neutral and Ground Terminals*

The standard terminals on grounds and neutrals are rated to accept (3)—#14–#10 Cu/Al or (1)—#14–4 wires. For larger cables, add-on neutral lugs may be ordered from the Accessories.

**Note:** NEC® allows only one current carrying conductor per hole on neutrals unless otherwise noted.

### *Bottom-Fed Loadcenters*

When the power cable is brought into the loadcenter from below the panel; then the main lug panels, and single-phase, 225 A and below, loadcenters can be rotated 180 degrees to allow straight-in wiring of power cables to the main terminals. Because the CSR main circuit breaker handle operates horizontally, the orientation of the main circuit breaker handle is consistent with the requirements of NEC Article 240.81.

### *Gutter Splicing*

Loadcenters are not UL listed as wiring troughs. Therefore, gutter splicing of riser cables to tap off to the main device is not permitted. Refer to NEC Article 373.8.

### *Fire Rating*

Due to the numerous openings in both loadcenter boxes and trims, they should not be mounted in firewalls. There is no approval method for sealing the enclosures for this application.

### *Date Code*

The date of manufacture of each loadcenter is printed on the outside of the carton as well as inside the loadcenter. On the carton, the date code is printed on the end carton label. In the loadcenter, the date code is located on the small white label located on the right side wall (with the main device on top).

The date code is in the following format: F # # # &. The "F" is the numeric code for the Lincoln, IL plant, and the three numbers are the year and week of manufacture, e.g., 023. The "&" sign at the end signifies the decade of the 2000s. The "!" at the end signifies the decade of the 2010s. Therefore, the date code F023& would indicate that the product was manufactured in the 23rd week of 2000. The 1980s are represented by a "+" sign and the 1990s are represented by a "=" at the end of the code.

### *Plug-On Type CH Breakers*

Quick-make, quick-break switch mechanism combined with inverse time element tripping operation and trip-free handle design. Type CH circuit breakers trip to the OFF position eliminating nuisance callbacks. The thermal-magnetic trip curve avoids nuisance tripping on mild overloads while reacting almost instantaneously to severe short-circuit conditions. CHF breakers include a 'trip flag' to differentiate between a tripped breaker and one that has been turned off. Multipole breakers have internal common trip connection to operate all poles simultaneously. Handles are marked with ON-OFF indication and ampere rating of the breaker. Type CH breakers meet UL Standard 489, NEMA standards, and Federal Spec Classification W-C 375 b/Gen. They are UL listed under File Number E11713, E8741, E3624 and E51287: and CSA® certified file number LR87196, except Type CHT breakers.

### *Type CH Circuit Breaker Ratings*

Single- and double-pole CH breakers rated 15 and 20 A have low instantaneous magnetic trip levels. The 15 and 20 A breakers with "HM" suffix have high magnetic trip settings recommended for circuits with inherently high inrush currents. All Type CH breakers are marked for heating, air conditioning and refrigeration (HACR) equipment application. Single-pole 15–20 A breakers are also suitable for switching duty (SWD). Shunt trip coils operate on 120 Vac and require one additional pole space per breaker.

Listed

## Type CH Loadcenter

Extra 1.5 inch Knockout (38.1 mm)
- Larger knockout provides easier installation and time savings for renovation installations

Top or Bottom Feed
- Straight-in wiring saves labor and material
- One panel for either top or bottom applications

2/0 Lug
- Easily removable and can be installed in any location on the neutral bar

Commercial Grade Main Breaker
- 25 kAIC series rated main breaker in 150 A–225 A load-centers. 35, 42 and 100 kAIC series ratings are available
- Optional convertible design—reduces inventory requirements

One Piece Silver-Flashed Copper Bus
- Provides superior conductivity, corrosion resistance and durability

Drywall Marking on Enclosure
- Indicates proper mounting depth for flush applications

Steel Backpan
- Provides solid and reliable breaker mounting—single piece design for stability and durability

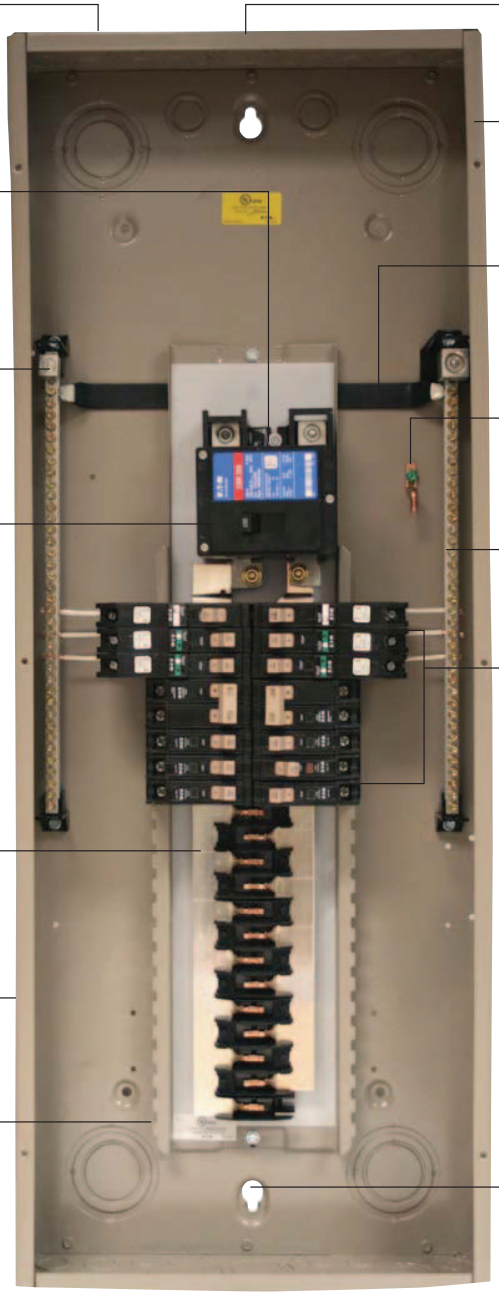

"Tangential" Center Knockout
- Easier installation for conduit applications

Unique Sandalwood Finish
- Aesthetically appealing, scratch-resistant powder coating

Neutral Bus (Strap)
- Easily removable for sub-panel applications

Bonding Z-Strap
- Provides easy field conversion for service entrance applications

Twin Neutral Bars
- Minimum 150% neutral capacity

Type CHF AFCI/GFCI/Thermal-Magnetic Breakers
- Advanced electronics effectively reduce nuisance tripping
- CHF AFCI breakers have a standard diagnostic LED indicating 1 of 7 trip codes
- Mechanical flag for trip indication (on thermal-magnetic AFCI and GFCI)
- All CH breakers provide industry exclusive 2-position handle with simple 1 step reset

Single Keyhole Mounting
- One keyhole at the top and bottom provides easier mounting and leveling

***Warranty***

The minimum warranty for residential loadcenters, breakers and surge protection devices shall be as follows:

- Lifetime loadcenter warranty
- Lifetime warranty on CH circuit breakers
- Lifetime warranty on CHSPT2ULTRA including $75,000 connected equipment warranty
- 1-year warranty on plug-in surge protective device (CHSA)

1

## Catalog Number Selection

### Loadcenters 100–225 A and 12–42 Circuits

**CH 42 B _ _ 200 _ K**

**LC Type**
Type CH 3/4-inch (19.1 mm) branch circuit breakers

**Number of Circuits**
Selection circuits

| | |
|---|---|
| 2 | 20 |
| 4 | 22 |
| 8 | 24 |
| 12 | 28 |
| 14 | 30 |
| 16 | 32 |
| 18 | 42 |

**Main Device**
- **L** = Main lug only
- **B** = Main breaker
- **N** = Convertible
- **H** = High AIC main breaker

**Construction**
- **Blank** = Standard
- **PN** = Plug-on neutral

**Phases**
- **Blank** = Single-phase
- **3** = Three-phase

**Bus Amperes**

| | |
|---|---|
| 40 | 150 |
| 70 | 200 |
| 100 | 225 |
| 125 | |

**Box Sizes**
- **B**
- **C**
- **D**
- **E**
- **G**
- **J**
- **K**
- **L**
- **R** = Outdoor (no cover)

**Accessories**
- **Blank** = Standard
- **EC** = Surge ready
- **SUR** = Surge factory installed

### Indoor Covers Ordered Separately

**CH _ 8 K F _**

**Type CH**

**Factory Options**
- **Blank** = Standard
- **SUR** = Surge/surge ready

**Loadcenter Cover Series**

**Box Size**
Indicated in loadcenter catalog number

**Mounting**
- **F** = Combination flush/surface
- **S** = Surface

**Accessories**
- **Blank** = Standard
- **M** = Mechanical interlock

**Note:** All combinations are not valid, refer to the catalog section.

## Product Selection

### *Single-Phase—Main Circuit Breaker Loadcenters—10/25 kAIC*

**CH42B200K**

### Single-Phase Three-Wire—120/240 Vac—Insulated/Bondable Split Neutral (Unless Otherwise Noted)

| Main Breaker Type | Main Ampere Rating | Maximum Number 3/4-Inch (19.1 mm) of Poles | Enclosure Type | Box Size | Wire Size Range Cu/Al 60 °C or 75 °C for Main Breaker | Loadcenter ①② Catalog Number | Loadcenter Cover Catalog Number Combination ③ | Surface |
|---|---|---|---|---|---|---|---|---|
| CH 10 kAIC | 100 | 14 | Indoor | B | #6–1/0 | **CH14B100B** ④ | **CH8BF** | **CH8BS** |
| | | 14 | Outdoor | B | #6–1/0 | **CH14B100R** ⑤ | — | — |
| | | 18 | Indoor | C | #6–1/0 | **CH18B100C** ④ | **CH8CF** | **CH8CS** |
| | | 18 | Outdoor | C | #6–1/0 | **CH18B100R** ⑤ | — | — |
| | | 22 | Indoor | C | #6–1/0 | **CH22B100C** ④ | **CH8CF** | **CH8CS** |
| | | 22 | Outdoor | C | #6–1/0 | **CH22B100R** ⑤ | — | — |
| | | 30 | Indoor | D | #6–1/0 | **CH30B100D** ④ | **CH8DF** | **CH8DS** |
| | | 30 | Outdoor | D | #6–1/0 | **CH30B100R** ⑤ | — | — |
| | 125 | 22 | Indoor | C | #6–1/0 | **CH22B125C** ④ | **CH8CF** | **CH8CS** |
| | | 22 | Outdoor | C | #6–1/0 | **CH22B125R** ⑤ | — | — |
| | | 30 | Indoor | D | #6–1/0 | **CH30B125D** ④ | **CH8DF** | **CH8DS** |
| | | 30 | Outdoor | D | #6–1/0 | **CH30B125R** ⑤ | — | — |
| CSR 25 kAIC | 150 | 8 | Outdoor | E | #2–300 kcmil | **CH8B150RF** ⑥ | — | — |
| | | 24 | Indoor | E | #2–300 kcmil | **CH24B150E** ④ | **CH8EF** | **CH8ES** |
| | | 24 | Outdoor | E | #2–300 kcmil | **CH24B150R** ⑤ | — | — |
| | | 32 | Indoor | J | #2–300 kcmil | **CH32B150J** ④ | **CH8JF** | **CH8JS** |
| | | 32 | Outdoor | J | #2–300 kcmil | **CH32B150R** ⑤ | — | — |
| | 200 | 8 | Outdoor | E | #2–300 kcmil | **CH8B200RF** ⑥ | — | — |
| | | 24 | Indoor | E | #2–300 kcmil | **CH24B200E** ④ | **CH8EF** | **CH8ES** |
| | | 24 | Outdoor | E | #2–300 kcmil | **CH24B200R** ⑤ | — | — |
| | | 32 | Indoor | J | #2–300 kcmil | **CH32B200J** ④ | **CH8JF** | **CH8JS** |
| | | 32 | Outdoor | J | #2–300 kcmil | **CH32B200R** ⑤ | — | — |
| | | 42 | Indoor | K | #2–300 kcmil | **CH42B200K** ④ | **CH8KF** | **CH8KS** |
| | | 42 | Outdoor | K | #2–300 kcmil | **CH42B200R** ⑤ | — | — |
| | 225 | 32 | Indoor | J | #2–300 kcmil | **CH32B225J** ④ | **CH8JF** | **CH8JS** |
| | | 32 | Outdoor | J | #2–300 kcmil | **CH32B225R** ⑤ | — | — |
| | | 42 | Indoor | K | #2–300 kcmil | **CH42B225K** ④ | **CH8KF** | **CH8KS** |
| | | 42 | Outdoor | K | #2–300 kcmil | **CH42B225R** ⑤ | — | — |
| DK 10 kAIC | 300 | 42 | Indoor | PM | (2) 3/0–250 kcmil | **CH42PM300** | **CH7PMF** ⑦ | **CH7PMS** |
| | 400 | 42 | Indoor | PM | (2) 3/0–250 kcmil | **CH42PM400** | **CH7PMF** ⑦ | **CH7PMS** |

***Notes***

① All main circuit breaker loadcenters are listed for use as service entrance equipment.
② Ground bar kits priced separately. See **Page V1-T1-25**.
③ Combination style covers may be used in surface or flush applications.
④ Can be top or bottom fed by rotating the enclosure and trim 180 degrees.
⑤ Rainproof panels are furnished with hub closure plates. For rainproof hubs, refer to **Page V1-T1-25**.
⑥ Panel includes #4–300 kcmil feed-through lugs.
⑦ This cover is for flush applications only (not combination).

Box sizes **Pages V1-T1-27** and **V1-T1-28**.

### *Single-Phase—High Interrupting Rated Main Circuit Breaker Loadcenters—100 kAIC*

## Single-Phase Three-Wire—120/240 Vac—Insulated/Bondable Split Neutral

| Main Breaker Type | Main Ampere Rating | Maximum Number 3/4-Inch (19.1 mm) Poles | Enclosure Type | Box Size | Wire Size Range Cu/Al 60 °C or 75 °C for Main Breaker | Loadcenter ① Catalog Number | Loadcenter Cover Catalog Number Combination ② | Surface |
|---|---|---|---|---|---|---|---|---|
| CHB4 100 kAIC ⑤ | 100 | 32 | Indoor | L | #6–1/0 | **CH32H100L** ③ | **CH8LF** | **CH8LS** |
| | | 32 | Outdoor | L | #6–1/0 | **CH32H100R** ④ | — | — |
| CHH 100 kAIC ⑤ | 150 | 32 | Indoor | L | #2/0–300 kcmil | **CH32H150L** | **CH8LF** | **CH8LS** |
| | | 32 | Outdoor | L | #2/0–300 kcmil | **CH32H150R** ④ | — | — |
| | 200 | 32 | Indoor | L | #2/0–300 kcmil | **CH32H200L** | **CH8LF** | **CH8LS** |
| | | 32 | Outdoor | L | #2/0–300 kcmil | **CH32H200R** ④ | — | — |
| | | 42 | Indoor | L | #2/0–300 kcmil | **CH42H200L** | **CH8LF** | **CH8LS** |
| | | 42 | Outdoor | L | #2/0–300 kcmil | **CH42H200R** ④ | — | — |
| | 225 | 42 | Indoor | L | #2/0–300 kcmil | **CH42H225L** | **CH8LF** | **CH8LS** |
| | | 42 | Outdoor | L | #2/0–300 kcmil | **CH42H225R** ④ | — | — |

***Notes***

① All main circuit breaker loadcenters are listed for use as service entrance equipment.
② Combination style covers may be used in surface or flush applications.
③ Loadcenter can be top or bottom fed by rotating the enclosure and trim 180 degrees.
④ Rainproof panels are furnished with hub closure plates. For rainproof hubs, refer to **Page V1-T1-25**.
⑤ Series rated for 100 kAIC with all Types CH, CHT and CHP breakers.

***Single-Phase—Main Lug Loadcenters***

## Single-Phase Three-Wire—120/240 Vac—Insulated/Bondable Single Neutral

| | Main Ampere Rating | Maximum Number 3/4-Inch (19.1 mm) Space | Poles | Enclosure Type | Type of Trim (Included) | Box Size | Wire Size Range Cu/Al 60 °C or 75 °C for Main Lugs | Loadcenter Catalog Number |
|---|---|---|---|---|---|---|---|---|
| **Surface Outdoor** | 40 | 2 | 4 ① | Indoor | Surface (no door) | 5 | #14–6 | **CH2L40SP** ②③ |
| | | 2 | 4 ① | Outdoor | — | 5R | #14–6 | **CH2L40RP** ②③④ |
| | | 2 | 4 ① | Indoor | Flush (no door) | 5 | #14–6 | **CH2L40FP** ②③ |
| **Flush Outdoor** | 70 | 2 | 4 ① | Indoor | Surface (no door) | 5 | #14–2 | **CH2L70SP** ②③ |
| | | 2 | 4 ① | Outdoor | — | 5R | #14–2 | **CH2L70RP** ②③④ |
| | | 2 | 4 ① | Indoor | Flush (no door) | 5 | #14–2 | **CH2L70FP** ②③ |
| **Surface (No Door)** | 125 | 2 | 4 ① | Indoor | Surface (no door) | 6 | #14–1/0 | **CH2L125SP** ②③ |
| | | 2 | 4 ① | Outdoor | — | 6R | #14–1/0 | **CH2L125RP** ②③④ |
| | | 2 | 2 | Outdoor | — | — | #14–1/0 | **CH2L125RSE2P** ④⑤⑥ |
| | | 2 | 4 ① | Indoor | Flush (no door) | 6 | #14–1/0 | **CH2L125FP** ②③ |
| | | 4 | 8 ① | Indoor | Surface (no door) | 7 | #14–1/0 | **CH4L125SP** ②⑦ |
| | | 4 | 8 ① | Outdoor | — | 7R | #14–1/0 | **CH4L125RP** ②④⑦ |
| **Flush (No Door)** | | 4 | 8 ① | Indoor | Flush (no door) | 7 | #14–1/0 | **CH4L125FP** ②⑦ |
| | | 6 | 12 ① | Outdoor | — | 6R | #14–1/0 | **CH6L125R** ②⑥⑦ |
| | | 8 | 16 ① | Indoor | Surface (no door) | 7 | #6–1/0 | **CH8L125SP** ②⑧ |
| | | 8 | 16 ① | Outdoor | — | 7R | #6–1/0 | **CH8L125RP** ②⑥⑦ |
| | | 8 | 16 ① | Indoor | Flush (no door) | 7 | #6–1/0 | **CH8L125FP** ②⑧ |
| **Outdoor** | | | | | | | | |

***Notes***

① Requires the use of Type CHT breakers.

② Ground bar kits priced separately, see **Page V1-T1-25**.
– For 2/4 and 6/12 circuit loadcenters, use Type GBK5 or GBK520 ground bar
– For 4/8 and 8/16 circuit loadcenters, use Type GBK10 ground bar
– Ground bars mount to the left side wall of the enclosure for the 4/8, 6/12 and 8/16 circuit loadcenters

③ Suitable for use as service equipment when not more than two service disconnecting mains are provided or when not used as a lighting and appliance panelboard (see Article 408.34 of the NEC).

④ Rainproof panels are furnished with hub closure plates. For rainproof hubs, refer to **Page V1-T1-25**.

⑤ For use as service entrance applications only.

⑥ Neutral/ground holes (6) #14–6 and (3) #14–2/0 AWG Cu/Al.

⑦ Suitable for use as service equipment when not more than two service disconnecting mains are provided or when not more than six service disconnecting mains are provided and when not used as a lighting and appliance panelboard (see Article 408.34 of the NEC).

⑧ Suitable for use as service equipment when a main breaker is used or when not more than six service disconnecting mains are provided and when not used as a lighting and appliance panelboard (see Article 408.34 of the NEC).

Box sizes **Pages V1-T1-27** and **V1-T1-28**.

CH42L225G

## Single-Phase Three-Wire—120/240 Vac—Insulated/Bondable Split Neutral—Factory-Installed Ground Bar

| Main Ampere Rating | Maximum Number 3/4-Inch (19.1 mm) Poles | Enclosure Type | Box Size | Wire Size Range Cu/Al 60 °C or 75 °C for Main Lugs | Loadcenter Catalog Number | Loadcenter Cover Catalog Number Combination | Loadcenter Cover Catalog Number Surface |
|---|---|---|---|---|---|---|---|
| 125 | 12 | Indoor | B | #6–2/0 | **CH12L125B** ① | **CH8BF** | **CH8BS** |
| | 12 | Outdoor | B | #6–2/0 | **CH12L125R** ①② | — | — |
| | 16 | Indoor | B | #6–2/0 | **CH16L125B** ① | **CH8BF** | **CH8BS** |
| | 16 | Outdoor | B | #6–2/0 | **CH16L125R** ①② | — | — |
| | 20 | Indoor | C | #6–2/0 | **CH20L125C** ① | **CH8CF** | **CH8CS** |
| | 20 | Outdoor | C | #6–2/0 | **CH20L125R** ①② | — | — |
| | 24 | Indoor | C | #6–2/0 | **CH24L125C** ① | **CH8CF** | **CH8CS** |
| | 24 | Outdoor | C | #6–2/0 | **CH24L125R** ①② | — | — |
| 150 | 24 | Indoor | D | #4–300 kcmil | **CH24L150D** ① | **CH8DF** | **CH8DS** |
| | 24 | Outdoor | D | #4–300 kcmil | **CH24L150R** ②③ | — | — |
| | 32 | Indoor | D | #4–300 kcmil | **CH32L150D** ① | **CH8DF** | **CH8DS** |
| | 32 | Outdoor | D | #4–300 kcmil | **CH32L150R** ②③ | — | — |
| 200 | 12 | Indoor | D | #4–300 kcmil | **CH12L200D** ① | **CH8DF** | **CH8DS** |
| | 12 | Outdoor | D | #4–300 kcmil | **CH12L200R** ②③ | — | — |
| | 16 | Indoor | D | #4–300 kcmil | **CH16L200D** ① | **CH8DF** | **CH8DS** |
| | 16 | Outdoor | D | #4–300 kcmil | **CH16L200R** ②③ | — | — |
| 225 | 24 | Indoor | D | #4–300 kcmil | **CH24L225D** ① | **CH8DF** | **CH8DS** |
| | 24 | Outdoor | D | #4–300 kcmil | **CH24L225R** ②③ | — | — |
| | 32 | Indoor | D | #4–300 kcmil | **CH32L225D** ① | **CH8DF** | **CH8DS** |
| | 32 | Outdoor | D | #4–300 kcmil | **CH32L225R** ②③ | — | — |
| | 42 | Indoor | G | #4–300 kcmil | **CH42L225G** ③ | **CH8GF** | **CH8GS** |
| | 42 | Outdoor | G | #4–300 kcmil | **CH42L225R** ②③ | — | — |
| 400 | 42 | Indoor | P | (2) 1/0–300 kcmil<br>(1) 750 kcmil | **CH42PL400** ④ | **CH7PF** ⑤ | **CH7PS** |

***Notes***

① Suitable for use as service equipment when not more than six disconnecting means are provided and when not used as a lighting and appliance panelboard (see Article 408.34 of the NEC).

② Rainproof panels are furnished with hub closure plates. For rainproof hubs, refer to **Page V1-T1-25**.

③ Suitable for use as service equipment when a circuit breaker is used as a main breaker. The main breaker is backfed and requires hold-down bracket kit catalog number **CH125RB**.

④ Suitable for use as service equipment when a circuit breaker is used as a main breaker. The main breaker is backfed and must be a Type CHB. **The breaker cannot be a Type CH**.

⑤ This cover is for flush application only (not combination).

Box sizes **Pages V1-T1-27** and **V1-T1-28**.

***Convertible Loadcenters MCB or MLO—Base Units and Main Devices—10/25/35 kAIC***

Complete assembly consists of: loadcenter, cover, and either main breaker kit or main lug kit.

## Indoor—Single-Phase—Three-Wire—120/240 V—Insulated/Bondable Split Neutral—Top or Bottom Feed

| Maximum Main Ampere Rating | Maximum Number of Single Poles | Box Size | Loadcenter Box and Panel Catalog Number ① | Loadcenter Cover Catalog Number | | Main Lug Kit | | Main Breaker Kit | | | |
|---|---|---|---|---|---|---|---|---|---|---|---|
| | | | | Combination | Surface | Wire Size | Catalog Number | kAIC Rating | Wire Size | Catalog Number | |
| 125 | 22 | C | **CH22N125C** | **CH8CF** | **CH8CS** | #10–1/0 | **CHL125N** | 10 | #10–1/0 | **CH2100N** ③ | — |
| | | | | | | | | | | **CH2125N** ③ | — |
| 200 | 32 | J | **CH32N200J** | **CH8JF** | **CH8JS** | #4–300 kcmil | **CHL225N** | 25/35 ② | #2–300 kcmil | **CSR2125N** | **CSH2125N** ④ |
| | | | | | | | | | | **CSR2150N** | **CSH2150N** ④ |
| | | | | | | | | | | **CSR2175N** | **CSH2175N** ④ |
| | | | | | | | | | | **CSR2200N** | **CSH2200N** ④ |
| 225 | 42 | K | **CH42N225K** | **CH8KF** | **CH8KS** | #4–300 kcmil | **CHL225N** | 25/35 ② | #2–300 kcmil | **CSR2125N** | **CSH2125N** ④ |
| | | | | | | | | | | **CSR2150N** | **CSH2150N** ④ |
| | | | | | | | | | | **CSR2175N** | **CSH2175N** ④ |
| | | | | | | | | | | **CSR2200N** | **CSH2200N** ④ |
| | | | | | | | | | | **CSR2225N** | **CSH2225N** ④ |

## Outdoor—Single-Phase—Three-Wire—120/240 V—Insulated/Bondable Split Neutral (Unless Otherwise Noted)

| Maximum Main Ampere Rating | Maximum Number of Single Poles | Box Size | Loadcenter Box and Panel Catalog Number ① | Main Lug Kit | | Main Breaker Kit | | | |
|---|---|---|---|---|---|---|---|---|---|
| | | | | Wire Size | Catalog Number | kAIC Rating | Wire Size | Catalog Number | |
| 125 | 22 | C | **CH22N125R** ⑤ | #10–1/0 | **CHL125N** | 10 | #10–1/0 | **CH2100N** ③ | — |
| | | | | | | | | **CH2125N** ③ | — |
| 200 | 8 | E | **CH8N200RF** ⑤⑥⑦ | #4–300 kcmil | **CHL225N** | 25/35 ② | #2–300 kcmil | **CSR2125N** | **CSH2125N** |
| | | | | | | | | **CSR2150N** | **CSH2150N** |
| | | | | | | | | **CSR2175N** | **CSH2175N** |
| | | | | | | | | **CSR2200N** | **CSH2200N** |
| 200 | 32 | J | **CH32N200R** ⑤ | #4–300 kcmil | **CHL225N** | 25/35 ② | #2–300 kcmil | **CSR2125N** | **CSH2125N** ④ |
| | | | | | | | | **CSR2150N** | **CSH2150N** ④ |
| | | | | | | | | **CSR2175N** | **CSH2175N** ④ |
| | | | | | | | | **CSR2200N** | **CSH2200N** ④ |
| 225 | 42 | K | **CH42N225R** ⑤ | #4–300 kcmil | **CHL225N** | 25/35 ② | #2–300 kcmil | **CSR2125N** | **CSH2125N** ④ |
| | | | | | | | | **CSR2150N** | **CSH2150N** ④ |
| | | | | | | | | **CSR2175N** | **CSH2175N** ④ |
| | | | | | | | | **CSR2200N** | **CSH2200N** ④ |
| | | | | | | | | **CSR2225N** | **CSH2225N** ④ |

***Notes***

① Panel does not include main. Order main breaker or main lug kit separately.
② If 35 kAIC is required, use CSH breaker.
③ Hold-down kit included.
④ 35 kAIC series combination rating is obtained when Types CH, CHT and CHP branch breakers are used with CSH main.
⑤ Rainproof panels are furnished with hub closure plates. For rainproof hubs, refer to **Page V1-T1-25**.
⑥ Includes feed-through lugs for both phase and neutral conductors.
⑦ Insulated/bondable single neutral.

Interrupting rating depends on main circuit breaker selected.

### *Three-Phase—Main Circuit Breaker Loadcenters—10 kAIC*

**CH42B3200L**

#### Three-Phase Four-Wire—208Y/120 Vac or 240 Vac Insulated/Bondable Split Neutral

| Main Breaker Type | Main Ampere Rating | Maximum Number 3/4-Inch (19.1 mm) Poles | Enclosure Type | Box Size | Wire Size Range Cu/Al 60 °C or 75 °C for Main Breaker | Loadcenter ①② Catalog Number | Loadcenter Cover Catalog Number Combination | Loadcenter Cover Catalog Number Surface |
|---|---|---|---|---|---|---|---|---|
| CC 10 kAIC | 150 | 30 | Indoor | L | #1–4/0 | **CH30B3150L** | **CH8LF** | **CH8LS** |
| | | 30 | Outdoor | L | #1–4/0 | **CH30B3150R** ③ | — | — |
| | 200 | 30 | Indoor | L | #2/0–300 kcmil | **CH30B3200L** | **CH8LF** | **CH8LS** |
| | | 30 | Outdoor | L | #2/0–300 kcmil | **CH30B3200R** ③ | — | — |
| | | 42 | Indoor | L | #2/0–300 kcmil | **CH42B3200L** | **CH8LF** | **CH8LS** |
| | | 42 | Outdoor | L | #2/0–300 kcmil | **CH42B3200R** ③ | — | — |
| | 225 | 30 | Indoor | L | #2/0–300 kcmil | **CH30B3225L** | **CH8LF** | **CH8LS** |
| | | 30 | Outdoor | L | #2/0–300 kcmil | **CH30B3225R** ③ | — | — |
| | | 42 | Indoor | L | #2/0–300 kcmil | **CH42B3225L** | **CH8LF** | **CH8LS** |
| | | 42 | Outdoor | L | #2/0–300 kcmil | **CH42B3225R** ③ | — | — |
| | 400 | 42 | Indoor | PM | (2) 3/0–350 kcmil | **CH424PM400** | **CH7PMF** ④ | **CH7PMS** |

### *Three-Phase—High Interrupting Rated Main Circuit Breaker Loadcenters—100 kAIC*

#### Three-Phase Four-Wire—208Y/120 Vac or 240 Vac Insulated/Bondable Split Neutral

| Main Breaker Type | Main Ampere Rating | Maximum Number 3/4-Inch (19.1 mm) of Poles | Enclosure Type | Box Size | Wire Size Range Cu/Al 60 °C or 75 °C for Main Breaker | Loadcenter Catalog Number ①② | Loadcenter Cover Catalog Number Combination | Loadcenter Cover Catalog Number Surface |
|---|---|---|---|---|---|---|---|---|
| CHH 100 kAIC ⑤ | 200 | 30 | Indoor | L | #2/0–300 kcmil | **CH30H3200L** | **CH8LF** | **CH8LS** |
| | | 30 | Outdoor | L | #2/0–300 kcmil | **CH30H3200R** ③ | — | — |
| | | 42 | Indoor | L | #2/0–300 kcmil | **CH42H3200L** | **CH8LF** | **CH8LS** |
| | | 42 | Outdoor | L | #2/0–300 kcmil | **CH42H3200R** ③ | — | — |
| | 225 | 42 | Indoor | L | #2/0–300 kcmil | **CH42H3225L** | **CH8LF** | **CH8LS** |
| | | 42 | Outdoor | L | #2/0–300 kcmil | **CH42H3225R** ③ | — | — |

***Notes***

① All main circuit breaker loadcenters are listed for use as service entrance equipment.
② Ground bar kits priced separately. For ground bar kits, see **Page V1-T1-25**.
③ Rainproof loadcenters are furnished with hub closure plates. For rainproof hubs, refer to **Page V1-T1-25**.
④ This cover for flush application only (not combination).
⑤ 100 kAIC series combination rating is obtained when Types CH and CHP branch breakers are used with CHH main.

### *Three-Phase—Main Lug Loadcenters*

#### Three-Phase Four-Wire—208Y/120 Vac or 240 Vac Insulated/Bondable Split Neutral (Unless Otherwise Noted)

| Main Ampere Rating | Maximum Number 3/4-Inch (19.1 mm) Spaces | Poles | Enclosure Type | Type of Trim Included | Box Size | Wire Size Range Cu/Al 60 °C or 75 °C for Main Lugs | Loadcenter Catalog Number | Loadcenter Cover Catalog Number Combination | Single |
|---|---|---|---|---|---|---|---|---|---|
| 125 | 6 | 12 ① | Indoor | Surface, no door | 7 | #14–1/0 | **CH6L3125SP** ②③④ | — | — |
| | 6 | 12 ① | Outdoor | — | 7R | #14–1/0 | **CH6L3125RP** ②③④⑤ | — | — |
| | 6 | 12 ① | Indoor | Flush, no door | 7 | #14–1/0 | **CH6L3125FP** ②③④ | — | — |
| | 12 | 12 | Indoor | — | B | #6–2/0 | **CH12L3125B** ⑥⑦ | **CH8BF** | **CH8BS** |
| | 12 | 12 | Outdoor | — | B | #6–2/0 | **CH12L3125R** ⑤⑥⑦ | — | — |
| | 18 | 18 | Indoor | — | C | #6–2/0 | **CH18L3125C** ⑥⑦ | **CH8CF** | **CH8CS** |
| | 18 | 18 | Outdoor | — | C | #6–2/0 | **CH18L3125R** ⑥⑦⑧ | — | — |
| | 24 | 24 | Indoor | — | C | #6–2/0 | **CH24L3125C** ⑥⑦ | **CH8CF** | **CH8CS** |
| | 24 | 24 | Outdoor | — | C | #6–2/0 | **CH24L3125R** ⑥⑦⑧ | — | — |
| 150 | 30 | 30 | Indoor | — | D | #4–300 kcmil | **CH30L3150D** ⑥⑦ | **CH8DF** | **CH8DS** |
| | 30 | 30 | Outdoor | — | D | #4–300 kcmil | **CH30L3150R** ⑤⑥⑨ | — | — |
| 225 | 24 | 24 | Indoor | — | D | #4–300 kcmil | **CH24L3225D** ⑥⑦ | **CH8DF** | **CH8DS** |
| | 24 | 24 | Outdoor | — | D | #4–300 kcmil | **CH24L3225R** ⑤⑥⑨ | — | — |
| | 30 | 30 | Indoor | — | D | #4–300 kcmil | **CH30L3225D** ⑥⑦ | **CH8DF** | **CH8DS** |
| | 30 | 30 | Outdoor | — | D | #4–300 kcmil | **CH30L3225R** ⑤⑥⑨ | — | — |
| | 42 | 42 | Indoor | — | G | #4–300 kcmil | **CH42L3225G** ⑧⑨ | **CH8GF** | **CH8GS** |
| | 42 | 42 | Outdoor | — | G | #4–300 kcmil | **CH42L3225R** ⑤⑧⑨ | — | — |
| 400 | 42 | 42 | Indoor | — | P | (2) 1/0–300 kcmil<br>(1) 750 kcmil | **CH424PL400** ⑩⑪ | **CH7PF** ⑫ | **CH7PS** |

***Notes***

① Requires the use of Type CHT breakers.
② Suitable for use as service equipment when not more than two service disconnecting means are provided or when not more than six service disconnecting means are provided and when not used as a lighting and appliance panelboard (see Article 408.34 of the NEC).
③ Ground bar kits priced separately, see **Page V1-T1-25**.
– Use GBK10 ground bar
– Ground bars mount to the left side wall of the enclosure.
④ Insulated/bondable single neutral.
⑤ Rainproof loadcenters are furnished with hub closure plates. For rainproof hubs, refer to **Page V1-T1-25**.
⑥ Ground bar Type GBK14 is installed.
⑦ Suitable for use as service equipment when a circuit breaker is used as a main breaker. The main breaker is backfed and requires hold-down bracket kit catalog number Type **CH125RB**. Suitable for use as service equipment when not more than six service disconnecting means are provided and when not used as a lighting and appliance panelboard (see Article 408.34 of the NEC).
⑧ Ground bar Type GBK21 is installed.
⑨ Suitable for use as service equipment when a circuit breaker is used as a main breaker. The main breaker is backfed and requires hold-down kit catalog number Type **CH125RB**.
⑩ For ground bar kits, see **Page V1-T1-25**.
⑪ Suitable for use as service equipment when a circuit breaker is used as a main breaker. The main breaker is backfed and must be a Type CHB. **The breaker cannot be a Type CH**.
⑫ This cover for flush application only (not combination).

Box sizes **Pages V1-T1-27** and **V1-T1-28**.

Spa Panels

## Contents—CH Specialty Products


| *Description* | *Page* |
|---|---|
| Overview | V1-T1-2 |
| CH Specialty Products | |
| Spa Panels | |
| Surge Panel | V1-T1-15 |
| Plug-On Neutral Loadcenter | V1-T1-17 |
| Type CH Renovation Loadcenter | V1-T1-18 |
| Type CH Retrofit Interior Kits | V1-T1-19 |
| CH Loadcenter Options and Accessories | V1-T1-22 |
| CH Circuit Breakers | V1-T1-31 |


## CH Specialty Products

## Spa Panels

### Product Description:

Eaton's CH Spa Panels are premium factory-assembled "combination" units that provide ground fault protection, as well as a convenient way to turn spa pumps on and off. The NEC requires that all pool and spa pumps be protected by a ground fault interrupter and a disconnect switch mounted within 10 feet of the tub or the spa.

### Features

- Two extra circuits for additional loads
- Limited lifetime warranty
- UL Listed
- Tough powder-coated galvanized steel enclosure
- Factory-installed two-pole ground fault circuit interrupter (GFCI)

***Quick-Pro℠***

All you need to know to save time and make more money. Specified on certain Eaton products, the Quick-Pro symbol allows for immediate recognition of products that are designed for straightforward installation. When you see Quick-Pro, you know you can install quickly—sometimes up to 50% less than the usual installation time—and move on to your next job.

### Product Selection

CH Spa Panel

**Single-Phase Three-Wire—120/240 Vac Insulated/Bondable Neutral—Factory-Installed Ground Bar**

| Main Ampere Rating | Circuit Breaker Included | Enclosure Type | Type of Trim Included | Box Size | Wire Size Range Cu/Al 60 °C or 75 °C for Main Lugs | Catalog Number |
|---|---|---|---|---|---|---|
| 30 | CH230GF | Outdoor | — | 5R | #14–1/0 | **CH30SPA** ① |
| 40 | CH240GF | Outdoor | — | 5R | #14–1/0 | **CH40SPA** ② |
| 50 | CH250GF | Outdoor | — | 5R | #14–1/0 | **CH50SPA** ③ |
| 60 | CH260GF | Outdoor | — | 5R | #14–1/0 | **CH60SPA** ④ |

***Notes***

① Includes a CH230GFI breaker, factory installed, and two extra circuits for convenience.
② Includes a CH240GFI breaker, factory installed, and two extra circuits for convenience.
③ Includes a CH250GFI breaker, factory installed, and two extra circuits for convenience.
④ Includes a CH260GFI breaker, factory installed, and two extra circuits for convenience.

Surge Panel

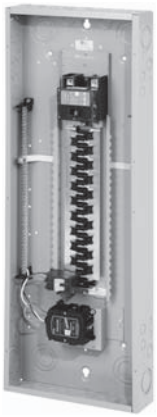

## Contents—CH Specialty Products


| *Description* | *Page* |
|---|---|
| Overview | V1-T1-2 |
| CH Specialty Products | |
| Spa Panels | V1-T1-14 |
| Surge Panel | |
| Plug-On Neutral Loadcenter | V1-T1-17 |
| Type CH Renovation Loadcenter | V1-T1-18 |
| Type CH Retrofit Interior Kits | V1-T1-19 |
| CH Loadcenter Options and Accessories | V1-T1-22 |
| CH Circuit Breakers | V1-T1-31 |


## Surge Panel

### Product Description

Eaton's Type CH Surge Loadcenter includes a factory-mounted and wired surge suppressor device. There is a knockout in the cover that allows the user to view the status indication lights on the surge suppressor. The CH Surge Loadcenter reduces the surge current, helping protect sensitive home electronic equipment.

Save labor by installing a factory-mounted surge protective device.

***Factory-Installed Surge Protection***

- Includes a CHSPT2ULTRA and a two-pole 50 A circuit breaker
- Increases the effectiveness of surge protection due to reduced lead length
- A modified deadfront allows for easy viewing of indicating lights

***Surge Ready***

- Provides a mounting provision for CHSPT2ULTRA
- A modified deadfront allows for easy viewing of indicating lights

### Product Selection

#### Surge Installed Loadcenters

| Ampere Rating | Type | Number of Circuits | Loadcenter Catalog Number | Loadcenter Cover Catalog Number Combination | Surface |
|---|---|---|---|---|---|
| 225 | Convertible | 42 | **CHSUR42N225L** ① | **CHSUR8LF** | **CHSUR8LS** |
| 225 | Convertible ② | 42 | **CHSUR42L225L2** ① | **CHSUR8LF** | **CHSUR8LS** |
| 200 | Main breaker | 42 | **CHSUR42B200L2** ① | **CHSUR8LF** | **CHSUR8LS** |
| 225 | Convertible | 32 | **CHSUR32N225K** ① | **CHSUR8KF** | **CHSUR8KS** |
| 225 | Convertible ② | 32 | **CHSUR32L225K** ① | **CHSUR8KF** | **CHSUR8KS** |
| 200 | Main breaker | 32 | **CHSUR32B200K** ① | **CHSUR8KF** | **CHSUR8KS** |
| 150 | Main breaker | 32 | **CHSUR32B150K** ① | **CHSUR8KF** | **CHSUR8KS** |
| 100 | Main breaker | 32 | **CHSUR32B100K** ① | **CHSUR8KF** | **CHSUR8KS** |
| 125 | Convertible ② | 24 | **CHSUR24L125E** ① | **CHSUR8EF** | **CHSUR8ES** |
| 100 | Main breaker | 24 | **CHSUR24B100E** ① | **CHSUR8EF** | **CHSUR8ES** |
| 200 | Convertible | 40/40 | **BRSUR4040N200** | Cover included | |
| 200 | Main lug | 40/40 | **BRSUR4040L200** | Cover included | |
| 200 | Main breaker | 40/40 | **BRSUR4040B200** | Cover included | |
| 200 | Convertible | 30/40 | **BRSUR3040N200** | Cover included | |
| 200 | Main lug | 30/40 | **BRSUR3040L200** | Cover included | |
| 200 | Main breaker | 30/40 | **BRSUR3040B200** | Cover included | |

***Notes***

① Order cover separately.
② With main lugs installed.

## Surge Ready Loadcenters (provision only, CHSPT2ULTRA and breaker not included)

| Ampere Rating | Type | Number of Circuits | Loadcenter Catalog Number ① | Loadcenter Cover Catalog Number Combination | Surface |
|---|---|---|---|---|---|
| 225 | Convertible | 42 | **CHEC42N225L** | **CHSUR8LF** | **CHSUR8LS** |
| 225 | Convertible ② | 42 | **CHEC42L225L** | **CHSUR8LF** | **CHSUR8LS** |
| 200 | Main breaker | 42 | **CHEC42B200L** | **CHSUR8LF** | **CHSUR8LS** |
| 225 | Convertible ② | 32 | **CHEC32L225K** | **CHSUR8KF** | **CHSUR8KS** |
| 225 | Convertible | 32 | **CHEC32N225K** | **CHSUR8KF** | **CHSUR8KS** |
| 225 | Convertible | 32 | **CHEC32N225R** ③ | — | — |
| 200 | Main breaker | 32 | **CHEC32B200K** | **CHSUR8KF** | **CHSUR8KS** |
| 150 | Main breaker | 32 | **CHEC32B150K** | **CHSUR8KF** | **CHSUR8KS** |
| 100 | Main breaker | 32 | **CHEC32B100K** | **CHSUR8KF** | **CHSUR8KS** |
| 125 | Convertible ② | 24 | **CHEC24L125E** | **CHSUR8EF** | **CHSUR8ES** |
| 100 | Main breaker | 24 | **CHEC24B100E** | **CHSUR8EF** | **CHSUR8ES** |

## Main Breaker Kits

| Maximum Main Ampere Rating | Catalog Number 25 kAIC | 35 kAIC |
|---|---|---|
| 100 | **CSR2100N** | **CSH2100N** |
| 150 | **CSR2150N** | **CSH2150N** |
| 200 | **CSR2200N** | **CSH2200N** |
| 225 | **CSR2225N** | **CSH2225N** |

## Main Lug Kits

| Maximum Main Ampere Rating | Catalog Number |
|---|---|
| 125 | **CHL125N** |
| 225 | **CHL225N** |

## Technical Data and Specifications

### *Ratings*

- Loadcenter
  - 25 kAIC main breaker, main lug only, and convertible main breaker/main lug
  - Factory installed or provision for field-installed surge suppressor
  - Top or bottom feed
- Surge protective device (CHSPT2ULTRA)
  - Nominal discharge current: 20 kA ($I_n$)
  - Surge current capacity per phase: 108 kA
  - Warranty: $75,000 connected equipment ④
  - For further product ratings, see Volume 1, Tab 2.1 Surge Protection

***Notes***

① Order cover separately.

② With main lugs installed.

③ Rainproof loadcenters are furnished with hub closure plates. For rainproof hubs, refer to **Page V1-T1-25**.

④ For warranty details, visit www.eaton.com/surgetrap.

60-Circuit Plug-On Neutral Loadcenter

## Contents—CH Specialty Products


| *Description* | *Page* |
|---|---|
| Overview | V1-T1-2 |
| CH Specialty Products | |
| Spa Panels | V1-T1-14 |
| Surge Panel | V1-T1-15 |
| Plug-On Neutral Loadcenter | |
| Type CH Renovation Loadcenter | V1-T1-18 |
| Type CH Retrofit Interior Kits | V1-T1-19 |
| CH Loadcenter Options and Accessories | V1-T1-22 |
| CH Circuit Breakers | V1-T1-31 |


## Plug-On Neutral Loadcenter

### Product Description

Code changes and higher safety standards are leading to more arc fault and ground fault circuit interrupter installations. Eaton offers a unique product solution that enables a direct connection of the breaker to the neutral bar, eliminating the need for wiring a pigtail.

### Features and Benefits

- Time savings up to 25% per AFCI/GFCI installation
- Eliminates nuisance tripping due to loose pigtail connections
- Clean gutter space
- Easier troubleshooting due to less wiring
- Backed by a limited lifetime warranty

### Product Selection

#### Main Breaker Plug-On Neutral Loadcenters

| Main Breaker Type | Main Ampere Rating | Max. Number 3/4-Inch Poles | Enclosure Type | Wire Size Range for Main Breaker | Catalog Number | Cover Catalog Number Combination | Cover Catalog Number Surface |
|---|---|---|---|---|---|---|---|
| CSR 25 kAIC | 100 | 24 | Indoor | #2–300 kcmil | **CH24BPN100E** | **CH8EF** | **CH8ES** |
| | 200 | 32 | Indoor | #2–300 kcmil | **CH32BPN200J** | **CH8JF** | **CH8JS** |
| | 200 | 42 | Indoor | #2–300 kcmil | **CH42BPN200K** | **CH8KF** | **CH8KS** |
| | 200 | 60 | Indoor | #2–300 kcmil | **CH60BPN200N** | **CH8NF** | **CH8NS** |

#### Main Lug Only/Convertible Plug-On Neutral Loadcenters—With Factory Installed Main Lugs

| Max. Ampere Rating | Max. Number 3/4-Inch Poles | Enclosure Type | Catalog Number | Wire Size Range for Main Breaker | Cover Catalog Number Combination | Cover Catalog Number Surface |
|---|---|---|---|---|---|---|
| 125 | 24 | Indoor | **CH24NLPN125E** ① | #6–300 kcmil | **CH8NLEF** | **CH8NLES** |
| 225 | 32 | Indoor | **CH32NLPN225J** | #6–300 kcmil | **CH8NLJF** | **CH8NLJS** |
| 225 | 42 | Indoor | **CH42NLPN225K** | #6–300 kcmil | **CH8NLKF** | **CH8NLKS** |
| 225 | 60 | Indoor | **CH60NLPN225N** | #6–300 kcmil | **CH8NLNF** | — |

#### Main Breaker Kits

| Breaker Ampere Rating | Lug Size | Catalog Number |
|---|---|---|
| 100 | #2–300 kcmil | **CSR2100** |
| 150 | #2–300 kcmil | **CSR2150N** |
| 200 | #2–300 kcmil | **CSR2200N** |
| 225 | #2–300 kcmil | **CSR2225N** |

***Note***

① Maximum 125 A main device.

Renovation Panel

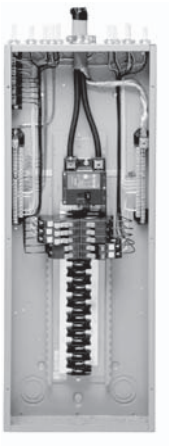

## Contents—CH Specialty Products


| *Description* | *Page* |
|---|---|
| Overview | V1-T1-2 |
| CH Specialty Products | |
| Spa Panels | V1-T1-14 |
| Surge Panel | V1-T1-15 |
| Plug-On Neutral Loadcenter | V1-T1-17 |
| Type CH Renovation Loadcenter | |
| Type CH Retrofit Interior Kits | V1-T1-19 |
| CH Loadcenter Options and Accessories | V1-T1-22 |
| CH Circuit Breakers | V1-T1-31 |


## Type CH Renovation Loadcenter

### Product Description

Eaton's Renovation Loadcenter is designed for the service contractor. With the addition of a five-circuit terminal block factory mounted in the top left corner of the loadcenter, the service contractor can terminate short-circuit wires instead of having to use expensive wire nuts. Also, the Renovation Loadcenter incorporates a twin-stacked neutral design that places the neutral and ground terminations higher in the loadcenter. Both of these features were added without increasing any size from a standard loadcenter. These features will eliminate the need for wire nuts and make for a much neater installation. There is a provision to field mount a second five-circuit terminal block (RN5TB) in the top right corner of the loadcenter. Choose amongst Eaton's Type CH breaker family for use in the Renovation Panel.

### Product Selection

***Single-Phase—Main Circuit Breaker Loadcenters 25 kAIC*** ①

#### Single-Phase, Three-Wire—120/240 Vac—Stacked Split Neutral

| Main Breaker Type | Main Ampere Rating | Max. Number 3/4-Inch (19.1 mm) of Poles | Enclosure Type | Box Size | Wire Size Range Cu/Al 60 °C or 70 °C for Main Breakers | Loadcenter Catalog Number | Cover Catalog Number ② Combination | Cover Catalog Number ② Surface |
|---|---|---|---|---|---|---|---|---|
| CH | 100 | 20 | Indoor | C | #6–1/0 | **CH22B100CRN** | **CH8CFF** | **CH8CS** |
| CSR | 150 | 32 | Indoor | J | #2–300 kcmil | **CH32B150JRN** | **CH8JF** | **CH8JS** |
| CSR | 200 | 32 | Indoor | J | #2–300 kcmil | **CH32B200JRN** | **CH8J** | **CH8JS** |
| CSR | 200 | 42 | Indoor | K | #2–300 kcmil | **CH42B200KRN** | **CH8KF** | **CH8KS** |

***Branch Circuit Breakers (CH)***

See **Pages V1-T1-2–V1-T1-13**.

#### Renovation Loadcenter

| Description | Catalog Number |
|---|---|
| Five-circuit terminal block kit | **RN5TB** |
| Ground bar kits (two maximum per panel) | (See **Page V1-T1-25**) |

***Notes***

① 100 A main breaker is rated 10 kAIC.

② Combination style covers may be used in surface or flush applications.

All main circuit breaker loadcenters are listed for use as service entrance equipment. Loadcenters are factory-bonded for service entrance applications. Remove bonding strap for separate neutral and ground bars for sub-feed applications.

Type CH Retrofit Interior

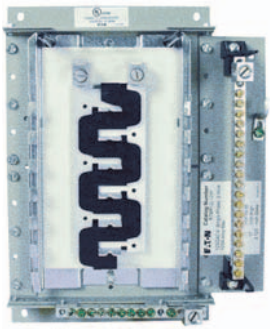

*Type CH Retrofit Adjustable Interior*

*Type CH Retrofit Interior Collar and Assembly with Trim*

## Contents—CH Specialty Products


| *Description* | *Page* |
|---|---|
| Overview | **V1-T1-2** |
| CH Specialty Products | |
| Spa Panels | **V1-T1-14** |
| Surge Panel | **V1-T1-15** |
| Plug-On Neutral Loadcenter | **V1-T1-17** |
| Type CH Renovation Loadcenter | **V1-T1-18** |
| Type CH Retrofit Interior Kits | |
| CH Loadcenter Options and Accessories | **V1-T1-22** |
| CH Circuit Breakers | **V1-T1-31** |


## Type CH Retrofit Interior Kits

### Product Description

Eaton's unique Retrofit Interior allows the customer to cost-effectively and safely upgrade an electrical service without removing the existing enclosure from the wall.

### Application Description

The Retrofit Interior is designed and tested specifically for renovating an outdated electrical panel in an apartment, a condominium or a single family home. These outdated panels are being recognized by local inspectors and other authorities as a possible hazard.

***Opportunities to Retrofit***

- Single- or three-phase
- Main lug only or main breaker
- Up to 42 circuits
- Up to 225 A interiors, 400 A available upon request
- Available with CH breakers (3/4-inch) with copper bus or BR breakers (1-inch) with aluminum bus
- The minimum lifetime warranty for residential breakers shall be as follows:
  - Limited lifetime warranty on all CH branch breakers and loadcenters
  - Refer to Eaton for complete warranty details

### Features and Benefits

***Upgrading Existing Electrical Infrastructure Is Simple***

- Replaces vintage brands that have hard to find, expensive replacement breakers
- Safely upgrade to arc fault and ground fault breakers to meet current electrical codes
- Maximizes number of circuits available with compact design
- Eco-friendly in asbestos-filled environments
- Exclusive design

***Save Time and Money Throughout the Installation***

- Uses existing panel box and wires
- Eliminates expensive and time-consuming drywall/paint repair
- Saves 2–3 hours of installation time compared to a complete panel changeout
- Eliminates precise measurements with field-adjustable kit

***Detailed Product Guide***

For questions about retrofit solutions, contact the Lincoln Flex Center at 800-330-6479 or flexcenterlincoln@eaton.com. Be sure to provide width, height and depth of panel.

### Standards and Certifications

Meets 2008/2011/2014 NEC wire bending requirements.

1

## CH Specialty Product Selection

To select the retrofit kit:

1. From the existing box size determine which retrofit groups are suitable (may be more than one).
2. Use type of interior, number of phases, and type of main to find the selection chart.
3. Select part number from chart (if main breaker, replace XXX with specific amp rating).
4. Note that the overlap of the existing wall is the retro cover size minus the existing box size. If specific measurements are needed, communicate that you need a custom trim size.
5. Contact the Lincoln Flex Center at 800-330-6479 for pricing, lead-times, and order entry instructions.

***How to Order:***

1. Measure the existing panel enclosure to determine appropriate kits for your project.
2. Match the existing dimensions with the table below to obtain the correct catalog number.
3. Order your retrofit kit from a local Eaton authorized distributor.

Need assistance or can't find retrofit to fit existing enclosure?

Email or call Eaton's Residential Flex Center at 1-800-330-6479 for all your retrofit needs. Go to www.eaton.com/eccn to locate an Eaton Certified Contractor.

### Retrofit Interior Kit Specifications

Five recommended groups: existing box height determines retro group size. Approximate Dimensions in Inches (mm).

| | | Existing Enclosure Parameters—Inches (mm) | | | | | | | | | |
|---|---|---|---|---|---|---|---|---|---|---|---|
| **Catalog Number ①** | **Cover ②** | **Minimum Depth** | **Maximum Depth** | **Minimum Width** | **Minimum Height** | **Phase** | **Main** | **Bus** | **Amperes ③** | **Spaces / Circuits** | **UL 67 Listed** |
| **CH Retrofit Interiors and Covers** | | | | | | | | | | | |
| **RWCH6L125N** | **CRWCH6ML****** | 3.13 (79.5) | 4.13 (104.9) | 7.00 (177.8) | 8.50 (215.9) | Single | MLO | CH | 125 | 6 | No |
| **RSCH10B125N** | **CRWCH12ML****** | 3.50 (88.9) | 4.50 (114.3) | 8.50 (215.9) | 16.50 (419.1) | Single | MCB | CH | 125 | 10 | No |
| **RSCH12L125N** | **CRWCH12ML****** | 3.50 (88.9) | 4.50 (114.3) | 8.50 (215.9) | 16.50 (419.1) | Single | MLO | CH | 125 | 12 | No |
| **RACH22B125J** | **CRACH24ML****** | 3.75 (95.3) | 4.25 (108.0) | 13.00 (330.2) | 21.00 (533.4) | Single | MCB | CH | 125 | 22 | No |
| **RACH24L125J** | **CRACH24ML****** | 3.75 (95.3) | 4.25 (108.0) | 13.00 (330.2) | 21.00 (533.4) | Single | MLO | CH | 125 | 24 | No |
| **RBCH24B200_** | **CRBCH24CS****** | 3.75 (95.3) | 6.00 (152.4) | 13.00 (330.2) | 29.00 (736.6) | Single | MCB | CH | 200 | 24 | No |
| **RBCH32L200_** | **CRBCH32ML****** | 3.75 (95.3) | 6.00 (152.4) | 13.00 (330.2) | 29.00 (736.6) | Single | MLO | CH | 200 | 32 | No |
| **RCCH32B200_** | **CRBCH32CS****** | 3.75 (95.3) | 6.00 (152.4) | 13.00 (330.2) | 34.00 (863.6) | Single | MCB | CH | 200 | 32 | No |

***Notes***

① Catalog numbers shown with "_" at the end need one of the following suffixes to denote depth:
J = 3.75–4.25
K = 4.25–5.00
L = 5.00–6.00
Example: RBCH24B200J would signify an interior set with a depth range of 3.75 to 4.25 inches.

② ****Denotes characters in the catalog number that relate to overall cover size.
Example: CRWCH6ML2620 would signify a cover 26.00 inches H x 20.00 inches W, or CRBCH24CS3324 would be 33.00 inches H x 24.00 inches W.

③ Amperes for MB panels is maximum; catalog number will reflect actual amperage of breaker included.

For UL applications, maximum cover sizes may apply.

### *Complete Assembly*

**Note:** For complete assembly, interior and cover need to be ordered separately.

### Adjustable Interior

- Factory installed ground and neutral bars positioned to accept existing wires
- Field adjustable depth matches existing panel box
- Adjustable height enables optional placement of the interior
- Field bondable for service entrance options

*Adjustable Interior*

### Standard Trim and Collar

- Standard trim matches new interior
- New circuit directory for updated labeling
- Oversized collar eliminates expensive wall/paint repair

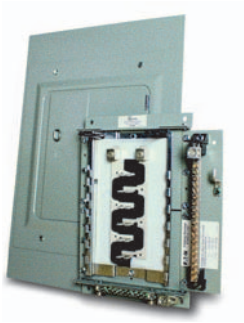

*Collar and Assembly with Trim*

### *Single-Phase—Main Lug Loadcenters, Non-Metallic*

**2460SNM**

#### Single-Phase Three-Wire—120/240 Vac—Insulated/Bondable Neutral

| Main Ampere Rating | Maximum Number 1-Inch (25.4 mm) Spaces | Circuits | Enclosure Type | Trim Type | Box Size | Wire Size Range Cu/Al 60 °C or 75 °C for Main Lugs | Loadcenter Catalog Number |
|---|---|---|---|---|---|---|---|
| 40 ① | 2 | 4 | Indoor | Flush (no door) | 2 | ② | **TT120FLGNM** ②③ |
| | 2 | 4 | Indoor | Surface (no door) | 2 | | **TT120SLGNM** ②③ |
| 60 | 2 | 4 | Indoor | Flush (no door) | 2 | #14–2 | **2460FNM** |
| | 2 | 4 | Indoor | Surface (no door) | 2 | | **2460SNM** |
| | 2 | 4 | Indoor | Flush (no door) | 2 | | **2460FGNM** ③ |
| | 2 | 4 | Indoor | Surface (no door) | 2 | | **2460SGNM** ③ |
| | 2 | 4 | Outdoor | — | — | | **2460RNM-A2** |

***Notes***

① Suitable for use as service equipment when not more than six main disconnecting means are provided and when not used as a lighting and appliance panelboard (see Article 408.34 of the NEC).

② This device has no main lugs. A Type BR or BD breaker is required to be backfed to supply power to branch breakers. This device is single-phase 120 Vac only. With the use of three Type BR breakers, there are two branch circuits available. With the use of three Type BD breakers, there are five branch circuits available.

③ Includes GB4NM ground bar.

1

## CH Loadcenter Options and Accessories

CHSF2125

CHSF3125

CHFP

TDL

BINA

### Field Installation and Parts

| Description | Ordering Quantity ① | Catalog Number |
|---|---|---|
| Sub-feed lug blocks—two-pole, 125 A, 3/4-inch (19.1 mm) spaces needed | 1 | **CHSF2125** |
| Sub-feed lug blocks—three-pole, 125 A, 3/4-inch (19.1 mm) spaces needed | 1 | **CHSF3125** |
| Neutral/ground lug—add-on neutral or ground lug | 1 | **NL20** |
| | 1 | **NL30** |
| | 1 | **NL300** |
| Filler plates—3/4-inch (19.1 mm) space circuit breaker space | 25 | **CHFP** |
| CSR main circuit breaker filler plate (with hardware) | 1 | **CSRFP** |
| Door lock—12–42 circuits, and 100–225 A | 1 | **TDL** |
| Sandlewood spray paint | 1 | **SPCSW** |
| ANSI-61 light gray touchup paint for outdoor loadcenters | 1 | **SPC61** |
| Isolated neutral assembly (computer circuits) | 1 | **BINA** |
| Circuit directory—adhesive backed | 10 | **TCD** |
| Cover screws | 25 | **LCCS** |
| Cover replacement latch 14-5/16 inch (363.55 mm) wide loadcenters only | 1 | **CHRLS** |
| Circuit marking strip (next to breakers) | 10 | **CHMS** |
| Circuit identification label (preprinted breaker labels next to breakers) | 25 | **CHBL** |
| Series rated caution label | 25 | **SRL** |
| Branch circuit numbering strip | 20 | **CHNS** |
| Bonding strap with screw | 1 | **BSSUSE** |
| CH plug-on neutral ground bonding strap | 1 | **BSCHPON** |

***Note***

① Must be purchased in multiples of ordering quantities indicated.

### *Mechanical Interlock Covers*

Covers mechanically interlock two breakers. Type A covers interlock two CH breakers mounted across from one another. Type B covers interlock a main Type CSR breaker with a Type CH.

**CH8BRM Type A**

**CH8EFM Type B**

## Mechanical Interlocks

| Type | Fits Loadcenter Catalog Numbers | Mechanical Interlock Trim/Deadfront Catalog Numbers: Flush | Surface |
|---|---|---|---|
| A | CH12L125B | CH8BFM | CH8BSM |
| | CH16L125B | | |
| | CH12L3125B | | |
| | CH14B100B | | |
| | CH20L125C | CH8CFM | CH8CSM |
| | CH24L125C | | |
| | CH18L3125C | | |
| | CH24L3125C | | |
| | CH22B100C | | |
| | CH22N100C | | |
| | CH24L150D | CH8DFM | CH8DSM |
| | CH32L150D | | |
| | CH24L3225D | | |
| | CH30L3150D | | |
| | CH42L225G | CH8GFM | CH8GSM |
| | CH42L3225G | | |
| | Inner cover of Box B raintight | — | CH8BRM |
| | Inner cover of Box C raintight | — | CH8CRM |
| **Indoor** | | | |
| B | CH24B150E | CHEFM | CHESM |
| | CH24B200E | | |
| | CH32B150J | CH8JFM | CH8JSM |
| | CH32B200J | | |
| | CH3242B200J | | |
| | CH32N200J | | |
| | CH32B225J | | |
| | CH42B200K | CH8KFM | CH8KSM |
| | CH42N200K | | |
| | CH42B225K | | |
| | CH60BPN200N | CH8NFM | — |
| **Outdoor** | | | |
| B | CH8B150RF | CH3RDF7M | — |
| | CH8B200RF | | |
| | CH8N200RF | | |
| | CH24B150R | | |
| | CH24B200R | | |
| | CH32B150R | CH3RDF9M | — |
| | CH32B200R | | |
| | CH32N200R | | |
| | CH32B225R | | |
| | CH42B200R | CH3RDF10M | — |
| | CH42N200R | | |
| | CH42B225R | | |

CH8BRM Type A

CH8EFM Type B

## Mechanical Interlocks, continued

| Type | Fits Loadcenter Catalog Numbers | Mechanical Interlock Trim/Deadfront Catalog Numbers: Flush | Surface |
|---|---|---|---|
| **Next Generation Power Center** | | | |
| B | CHPC32B150L | CHPC8B32LFM | — |
| | CHPC32B200L | | |
| | CHPC32N200L | | |
| | CHPC42B150L | CHPC8B42LFM | — |
| | CHPC42B200L | | |
| | CHPC42N200L | | |
| | CHPC32B125TR | CH3RDF15M | — |
| | CHPC32B150TR | | |
| | CHPC32B200TR | | |
| | CHPC32N200TR | | |
| | CHPC42B150TR | CH3RDF16M | — |
| | CHPC42B200TR | | |
| | CHPC42N200TR | | |
| | CHPC32B150TR | CH3RDF17M | — |
| | CHPC32B200TR | | |
| | CHPC42B200BR | CH3RDF18M | — |
| **Vintage** ① | | | |
| | CH20JJM200 | CH7JJFREPLM | — |
| | CH24JJM150 | | |
| | CH30JJM150 | | |
| | CH30JJM200 | | |
| | CH30JJM150H | | |
| | CH3040JJMM200 | | |
| | CH304JJM150 | | |
| | CH304JJM200 | | |
| | CH304JJM200H | | |
| | CH30KKM225 | CH7KKFREPLM | — |
| | CH40KKM200H | | |
| | CH40KKM225 | | |
| | CH40KKM200H | | |
| | CH40KKM225H | | |
| | CH304KKM200 | | |
| | CH304KKM200H | | |
| | CH304LLM225 | CH7LLFREPLM | — |
| | CH424LLM225H | | |

***Note***

① If vintage part number does not match exactly, the cover may not fit. Simple variations such as an "N" at the end of the part number contain minor design variations that will prevent our cover from working with that particular loadcenter.

DS100H1

## Field Installation Rainproof Conduit Hubs

| Description | Conduit Size Inches (mm) | Ordering Quantity ① | Catalog Number |
|---|---|---|---|
| Group 1—for use with 70, 100 and 125 A MLO and MCB loadcenters and circuit breaker enclosures | 0.75 (19.1) | 1 | **DS075H1** |
| | 1.00 (25.4) | 1 | **DS100H1** |
| | 1.25 (31.8) | 1 | **DS125H1** |
| | 1.50 (38.1) | 1 | **DS150H1** |
| | 2.00 (50.8) | 1 | **DS200H1** |
| Group 2—for use with 150, 200 and 225 A MLO and MCB loadcenters and circuit breaker enclosures | 2.00 (50.8) | 1 | **DS200H2** |
| | 2.50 (63.5) | 1 | **DS250H2** |
| | 3.00 (76.2) | 1 | **DS300H2** |
| Adapter kit—allows installing a Group 1 hub on devices arranged for Group 2 hubs | — | 1 | **DS900AP** |
| Group 1—small blank hub closure plate | — | 1 | **DS900CP1** |
| Group 2 —large blank hub closure plate | — | 1 | **DS900CP2** |

GBK14

## Ground Bar Kits

| Description (See Legend) | Length Inches (mm) | Ordering Quantity ② | Catalog Number |
|---|---|---|---|
| ●○○○○●○ | 2.54 (64.5) | 1 | **GBK5** ② |
| ●○○○○●○■ | 3.59 (91.2) | 1 | **GBK520** ② |
| ●○○○○●○○○○○○ | 4.29 (109.0) | 1 | **GBK10** ② |
| ●○○○○●○○○○○○■ | 5.34 (135.6) | 1 | **GBK1020** ② |
| ◒●◒◒◒⬓◒●◒⬓◒◒◒ | 4.61 (117.1) | 1 | **GBK13** ② |
| ●○○○○●○○○○○○○○○ | 5.69 (144.5) | 1 | **GBK14** ② |
| ●○○○○●○○○○○○○○○■ | 6.74 (171.2) | 1 | **GBK1420** ② |
| ●○○○○●○○○○○○○○○○○○○○○ | 8.14 (206.8) | 1 | **GBK21** ② |
| ●○○○○●○○○○○○○○○○○○○○○○○■ | 9.19 (233.4) | 1 | **GBK2120** ② |
| ○○○○○○○○●○○○○○○●○○○○○○○ | 7.94 (201.7) | 1 | **CH9GP21** ③④ |

**Ground Bar Legend**

○ = (3) #14–#10 Cu/Al or (1) #14–#4 Cu/Al
■ = (1) #6–2/0 Cu/Al
⬓ = (1) 1/0–14 or (3) #10–12 Cu/Al
◒ = (1) #14–1/0 Cu/Al or (3) #14–#10 Cu/Al
● = Mounting hole

## Grounded "B" Phase Adapters

| Maximum Amperes | Three-Phase Loadcenter Types of Panels | Kit Catalog Number ⑤ |
|---|---|---|
| 125 | 12–32 circuit main lug | **CHGRD1** |
| 225 | Main lug and CHH main breaker panels | **CHGRD2** |
| | CC main CB panels | **CHGRD3** |

## Neutral Bar Accessories

| Description | Catalog Number ⑤ |
|---|---|
| Replacement neutral for all B and C type boxes | **CHN125C** |
| Replacement neutral for all D type boxes | **CHN125D** |
| Replacement neutral for all E, G, J, K and L type boxes | **CHN225L** |
| Isolated Neutral Assembly (computer circuits) | **BINA** |

***Notes***

① Must be purchased in multiples of ordering quantities indicated.
② Distance between mounting holes is 1-3/4 inches (44.5 mm).
③ For single- and three-phase 400 A loadcenters.
④ Distance between mounting holes is 2-13/32 inches.
⑤ Cannot be used in Safety Breaker Panels. Classic Plus Panels only.

***Decorator Cover Accessory***

- For easy use with CH loadcenters mounted in living space
- Easily wallpapered or painted to match any decor
- Loadcenter accessory—exclusively from Eaton

***Now you see it …***



***… Now you don't.***

## Decorator Cover Accessory ①

| Catalog Number<br>Corresponding Cover | Existing CH Loadcenter Cover |
|---|---|
| CH8BF | **CH8KDNB** |
| CH8CF | **CH8KDNC** |
| CH8DF/EF | **CH8KDND** |
| CH8GF/JF | **CH8KDNJ** |
| CH8KF | **CH8KDNK** |

***Loadcenter Goof Collars***

Don't let an ugly drywall problem ruin a beautiful electrical installation.

Eaton's Goof Collar is designed to cover gaps between the finished drywall and loadcenter enclosure. This is often necessary when upgrading the electrical service and the drywall surrounding the panel is damaged. The collar allows 2 inches of overhang beyond the standard flush trim.

***Before***

***After***

## CH Goof Collars

| Inches (mm)<br>Height | Width | Catalog Number<br>Loadcenter Cover | Goof Collar |
|---|---|---|---|
| 21.00 (533.4) | 19.00 (482.6) | **CH8BF** | **CH8BFC1921** |
| 26.00 (660.4) | 19.00 (482.6) | **CH8CF** | **CH8CFC1926** |
| 34.00 (863.6) | 19.00 (482.6) | **CH8DF** | **CH8DFC1934** |
| | | **CH8EF** | |
| | | **CHSUR8EF** | |
| 39.00 (990.6) | 19.00 (482.6) | **CH8GF** | **CH8JFC1939** |
| | | **CH8JF** | |
| 42.00 (1066.8) | 19.00 (482.6) | **CH8KF** | **CH8KFC1942** |
| | | **CHSUR8KF** | |
| 44.00 (1117.6) | 19.00 (482.6) | **CH8LF** | **CH8LFC1944** |
| | | **CHSUR8LF** | |

## BR Goof Collars

| Inches (mm)<br>Height | Width | Catalog Number<br>BR Box Size | Goof Collar |
|---|---|---|---|
| 21.00 (533.4) | 19.00 (482.6) | **B1** | **BRB2GC2319** |
| 23.00 (584.2) | 19.00 (482.6) | **B2** | **BRB1GC2119** |
| 25.00 (635.0) | 19.00 (482.6) | **C1** | **BRC1GC2519** |
| 27.00 (685.8) | 19.00 (482.6) | **C2** | **BRC2GC2719** |
| 31.00 (787.4) | 19.00 (482.6) | **C4** | **BRC4GC3119** |
| 34.00 (863.6) | 19.00 (482.6) | **D1** | **BRD1GC3419** |
| 38.00 (965.2) | 19.00 (482.6) | **G1** | **BRG1GC3819** |
| 43.00 (1092.2) | 19.00 (482.6) | **L1** | **BRL1G4319** |
| 48.00 (1219.2) | 19.00 (482.6) | **L2** | **BRL2GC4819** |

***Note***

① For goof collars not listed in the table, please contact the Lincoln Flex Center at 1-800-330-6479.

## Dimensions

Approximate Dimensions in Inches (mm)

***Residential/Commercial/Unit Enclosure—Box Sizes***

**Note:** Box sizes do not include covers/fronts.

### Residential Loadcenters

| Box Size | Height | Width | Depth |
|---|---|---|---|
| **NEMA Type 1 Indoor** | | | |
| 5 | 9.50 (241.3) | 4.50 (114.3) | 3.13 (79.4) |
| 6 | 11.38 (288.9) | 6.88 (174.6) | 3.39 (86.1) |
| 7 | 13.00 (330.2) | 11.00 (279.4) | 3.69 (93.7) |
| B | 16.75 (425.5) | 14.31 (363.5) | 3.88 (98.4) |
| C | 21.00 (533.4) | 14.31 (363.5) | 3.88 (98.4) |
| D | 29.13 (739.8) | 14.31 (363.5) | 3.88 (98.4) |
| E | 29.13 (739.8) | 14.31 (363.5) | 3.88 (98.4) |
| G | 34.13 (866.8) | 14.31 (363.5) | 3.88 (98.4) |
| J | 34.13 (866.8) | 14.31 (363.5) | 3.88 (98.4) |
| K | 37.00 (939.8) | 14.31 (363.5) | 3.88 (98.4) |
| L | 39.00 (990.6) | 14.31 (363.5) | 3.88 (98.4) |
| N | 45.00 (1143.0) | 14.31 (363.5) | 3.88 (98.4) |
| **NEMA Type 3R Outdoor** | | | |
| 5R | 9.50 (241.3) | 4.50 (114.3) | 3.13 (79.4) |
| 6R | 11.75 (298.5) | 6.50 (165.1) | 4.50 (114.3) |
| 7R | 13.00 (330.2) | 11.00 (279.4) | 3.69 (93.7) |
| B | 16.75 (425.5) | 14.31 (363.5) | 5.19 (131.8) |
| C | 21.00 (533.4) | 14.31 (363.5) | 5.19 (131.8) |
| D | 29.13 (739.8) | 14.31 (363.5) | 5.19 (131.8) |
| E | 29.13 (739.8) | 14.31 (363.5) | 5.19 (131.8) |
| G | 34.13 (866.8) | 14.31 (363.5) | 5.19 (131.8) |
| J | 34.13 (866.8) | 14.31 (363.5) | 5.19 (131.8) |
| K | 37.00 (939.8) | 14.31 (363.5) | 5.19 (131.8) |
| L | 39.00 (990.6) | 14.31 (363.5) | 5.19 (131.8) |

### Commercial Loadcenters

| Box Size | Height | Width | Depth |
|---|---|---|---|
| **NEMA Type 1 Indoor** | | | |
| P | 54.38 (1381.1) | 21.00 (533.4) | 6.00 (152.4) |
| PM | 62.63 (1590.7) | 21.00 (533.4) | 6.00 (152.4) |

### Types ECB and ECC Unit Enclosures

| Height | Width | Depth |
|---|---|---|
| **NEMA Type 1 Indoor** | | |
| 23.25 (590.6) | 8.88 (225.4) | 4.50 (114.3) |
| **NEMA Type 3R Outdoor** | | |
| 23.69 (601.7) | 9.31 (236.5) | 5.44 (138.1) |

***Residential Loadcenter Knockout***

Residential NEMA Type 1 Indoor and NEMA Type 3R Outdoor Enclosures.

### Knockouts for Box Sizes 5, 6, 7, 5R, 6R, 7R

| Code | Diameter | | | |
|---|---|---|---|---|
| A | 0.50 (12.7) | — | — | — |
| B | 0.50 (12.7) | 0.75 (19.1) | — | — |
| C | 0.50 (12.7) | 0.75 (19.1) | 1.00 (25.4) | — |
| D | 0.50 (12.7) | 0.75 (19.1) | 1.00 (25.4) | 1.25 (31.8) |
| E | 0.75 (19.1) | 1.00 (25.4) | 1.25 (31.8) | — |
| F | 0.75 (19.1) | 1.00 (25.4) | 1.25 (31.8) | 1.50 (38.1) |
| G | 1.00 (25.4) | 1.25 (31.8) | 1.50 (38.1) | — |
| H | 1.00 (25.4) | 1.25 (31.8) | 1.50 (38.1) | 2.00 (50.8) |
| I | 1.25 (31.8) | 1.50 (38.1) | 2.00 (50.8) | — |

### Knockout Positions

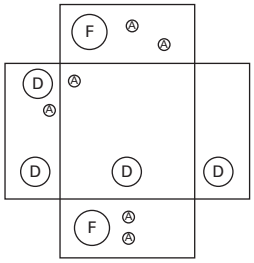


***Box 5***

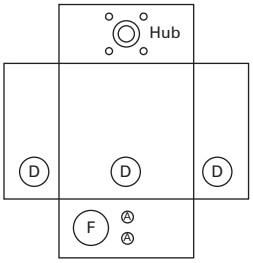


***Box 5R***

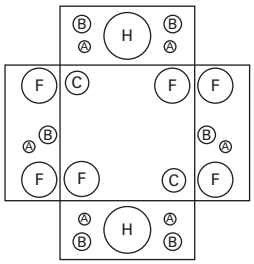


***Box 6***

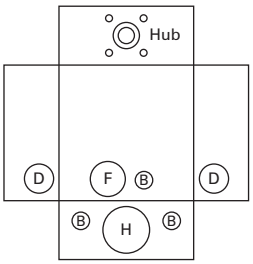


***Box 6R***

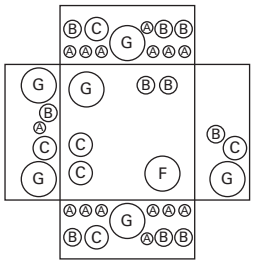


***Box 7***

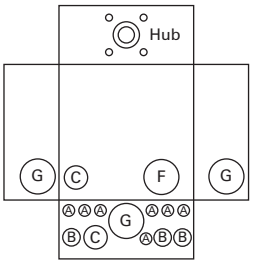


***Box 7R***

Approximate Dimensions in Inches (mm)

***Residential and Commercial Loadcenter Knockout***

Residential NEMA Type 1 indoor and NEMA Type 3R outdoor enclosures.

## Knockouts for Box Sizes 8, 8R, P, PM, B, C, D, E, G, J, K, L, N and Outdoor Boxes 12–60 Circuits

| Code | Diameter | | | | |
|---|---|---|---|---|---|
| a | 0.75 (19.1) | — | — | — | — |
| b | 0.50 (12.7) | 0.75 (19.1) | — | — | — |
| c | 0.50 (12.7) | — | — | — | — |
| d | 1.00 (25.4) | 1.25 (31.8) | 1.50 (38.1) | 2.00 (50.8) | 2.50 (63.5) |
| e | 1.25 (31.8) | 1.50 (38.1) | 2.00 (50.8) | 2.50 (63.5) | — |
| f | 0.75 (19.1) | 1.25 (31.8) | 1.50 (38.1) | 2.00 (50.8) | — |
| g | 0.50 (12.7) | 0.75 (19.1) | 1.00 (25.4) | — | — |
| h | 1.50 (38.1) | 2.00 (50.8) | 2.50 (63.5) | — | — |
| i | 0.50 (12.7) | 0.75 (19.1) | 1.00 (25.4) | 1.25 (31.8) | 1.50 (38.1) |
| j | 1.00 (25.4) | 1.25 (31.8) | 1.50 (38.1) | — | — |
| k | 1.25 (31.8) | 1.50 (38.1) | 2.00 (50.8) | — | — |
| m | 0.75 (19.1) | 1.00 (25.4) | 1.25 (31.8) | 1.50 (38.1) | 2.00 (50.8) |
| n | 0.75 (19.1) | 1.00 (25.4) | 1.25 (31.8) | 1.50 (38.1) | — |
| p | 2.00 (50.8) | 2.50 (63.5) | — | — | — |

## Knockout Diagram

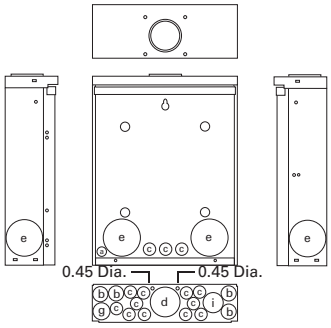


***Outdoor Boxes***
***12–42 Circuits 225 A Maximum***

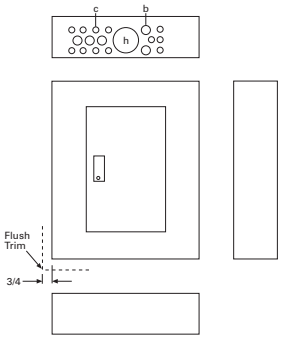


***Box P, PM***

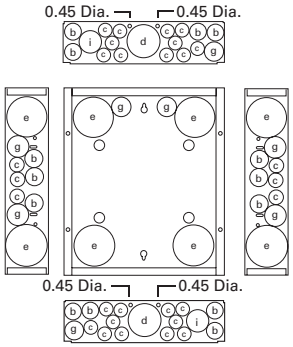


***Box B***

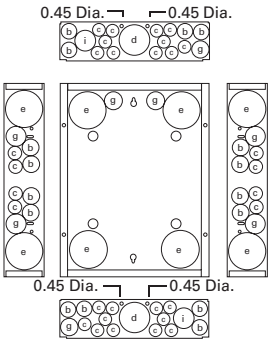


***Box C, D, E, G, J, K, L, N***

## Type ECB and ECC Unit Enclosure Knockout

| Code | Diameter | | | | |
|---|---|---|---|---|---|
| **NEMA Type 1 Indoor (Flush and Surface Trims)** | | | | | |
| A | 0.50 (12.7) | — | — | — | — |
| B | 1.25 (31.8) | 1.50 (38.1) | 1.75 (44.5) | 2.00 (50.8) | 2.50 (63.5) |
| **NEMA Type 3R Outdoor** | | | | | |
| A | 0.50 (12.7) | — | — | — | — |
| B | 1.25 (31.8) | 1.50 (38.1) | 1.75 (44.5) | 2.00 (50.8) | 2.50 (63.5) |

## NEMA Type 1—Indoor

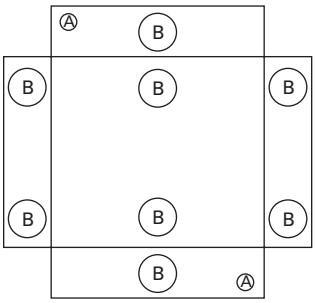


## NEMA Type 3R—Outdoor

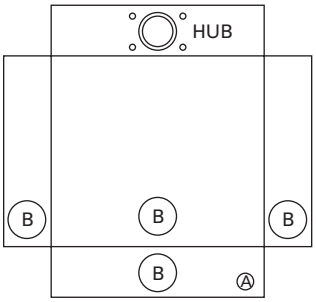

## Technical Data and Specifications

### General

A. The Contractor shall furnish and install loadcenters incorporating circuit breakers of the number, rating and type as specified herein and as shown on the contract drawings.

B. The loadcenter and all components shall be designed, manufactured and tested in accordance with the latest applicable standards of UL and NEMA including:

1. UL 67—standards for panelboards
2. UL 50—standards for cabinets and boxes
3. UL 489—standards for molded case circuit breakers
4. Federal Spec Classification W-C 375
5. UL 1699—all fault interrupting

### Qualifications

A. The manufacturer of the loadcenter shall be the manufacturer of the circuit breaker within the load center. All breakers shall be full size.

B. For the equipment specified herein, the manufacturer shall be ISO® 9000 certified.

C. The manufacturer of this equipment shall have produced similar electrical equipment for a minimum period of seven (7) years.

### Manufacturers

A. Eaton

### Ratings

A. Loadcenters shall be rated for 240 Vac and shall have short-circuit ratings as shown on the drawings or as herein scheduled, but not less than 10,000 amperes rms symmetrical.

B. Breakers shall be full size and a minimum of 125 A frame. Breakers 10 –125 A trip size shall take up the same pole spacing.

C. Loadcenters shall be labeled with a UL short-circuit rating. When series ratings are applied with integral or remote devices, a label shall be provided. Series ratings shall cover all trip ratings of installed frames. It shall state the conditions of the UL series ratings including:

1. Size and type of upstream device.
2. Branch devices that can be used.
3. UL series short-circuit rating.

### Construction

A. All interiors, with the exception of the branch circuit breakers shall be completely factory assembled with main breakers, main lugs or no main device.

B. Interiors shall be so designed that circuit breakers can be replaced without disturbing adjacent units and without removing the main bus connectors and shall be so designed that circuits may be changed without machining, drilling or tapping.

C. Physical means must be provided to prevent the installation of more overcurrent devices than that number for which the enclosure was designed. Full size breakers are required.

### Bus

A. Busbars for the main and cross connectors shall be of silver flash plated copper construction in accordance with UL standards. Bussing shall be braced to 65 kAIC.

B. Neutral bussing shall have a suitable lug for each outgoing feeder requiring a neutral connection of same ampacity as branch.

### Wiring/Termination

A. All wire connectors and terminals shall be of the anti-turn solderless type and suitable for copper or aluminum wire of the sizes indicated. All connectors shall meet the "Requirements for Wire Connectors and Soldering Lugs" UL 486B.

B. All loadcenters where marked shall be suitable for use with 60/75 °C rated wire.

### Circuit Breakers

A. Circuit breakers shall be molded case type, 3/4-inch (19.1 mm) wide per pole. Multipole circuit breakers shall be of a stack pole design to provide electrical phase isolation and have an internal common trip.

B. Each pole of the circuit breaker will have inverse time delay overload and instantaneous short-circuit protection by means of both thermal and magnetic sensors. Circuit breakers shall be quick-make/quick-break.

C. The circuit breaker calibration shall not be affected by environmental changes in relative humidity. Breakers shall be calibrated after assembly.

D. All circuit breakers shall be operated by a toggle-type handle and multipole circuit breakers shall have an internal common trip mechanism. The circuit breakers shall incorporate trip mechanisms that are mechanically trip-free from the handle. The handle position shall provide good visual trip indication.

E. Contacts shall be of non-welding silver alloy.

F. All branch breaker handles shall be of a different color than the case of the breaker.

G. All terminals shall be listed for use with copper or aluminum conductors. Terminals shall be of the box lug design. The terminals shall meet UL 486B requirements and shall be suitable for use with either 60 °C or 75 °C wire.

H. Breakers shall be SWD rated and/or HACR rated as required.

I. Arc fault interrupting circuit breakers, (AFC), shall be provided on all 15 and 20 A single-phase 120/240 Vac circuits except those indicated as remote controlled breakers. AFI breakers shall be "Classified for mitigating the effects of arcing faults," or conforming to UL Standard 1699 and as defined by per Article 210.12 Section A of the NEC Code.

**Enclosures**

A. Loadcenters shall have NEMA 1 general purpose or NEMA 3R rainproof enclosures as indicated on the drawings and shall be surface or flush mounted except where noted.

B. For indoor applications, enclosures shall be rated NEMA 1. Enclosures shall be manufactured from cold-rolled code-gauge sheet steel having multiple knockouts and painted per paint specification. For outdoor applications, enclosures shall be rated NEMA 3R. Enclosures shall be manufactured from galvanized steel which shall be painted per the painted as specified. Enclosures shall be of sufficient size to meet or exceed NEC wire bending space.

C. The cover shall have an easy adjustment feature for flush applications.

D. Boxes shall be factory assembled into a single rigid structure.

E. Provide circuit breaker marking labels and directories.

**Finish**

A. Boxes and trims shall be finished with a high scratch-resistant aesthetically pleasing finish. The finish shall be polyurethane coating electrostatically applied to a thickness of 1.8 to 2 mils.

All loadcenters shall be provided with provisions for accepting a paintable or wall paperable decorator accessory cover. Where loadcenters are installed in living areas, provide manufacturer designed and tested decorator cover kits.

Plug-On Circuit Breakers

## Contents


| *Description* | *Page* |
|---|---|
| Overview | **V1-T1-2** |
| CH Specialty Products | **V1-T1-14** |
| CH Loadcenter Options and Accessories | **V1-T1-22** |
| CH Circuit Breakers | |
| Product Selection | **V1-T1-32** |
| Options and Accessories | **V1-T1-38** |
| Technical Data and Specifications | **V1-T1-40** |
| Wiring Diagrams | **V1-T1-40** |


## CH Circuit Breakers

### Product Description

Quick-make, quick-break switch mechanism combined with inverse time element tripping operation and trip-free handle design. Type CH circuit breakers trip to the OFF position, eliminating nuisance callbacks. The CHF family also includes a trip flag to differentiate between a trip and the breaker being turned off. The thermal-magnetic trip curve avoids nuisance tripping on mild overloads while reacting almost instantaneously to severe short-circuit conditions. Multipole breakers have internal common trip connection to operate all poles simultaneously. Handles are marked with ON-OFF indication and ampere rating of the breaker.

***Special Application Plug-On Circuit Breakers—Type CH 10 kAIC 120 Vac and 120/240 Vac***

**Branch Feeder Type Arc Fault Circuit Breakers**
A branch feeder type arc fault circuit interrupter is a device intended to mitigate high current arcing faults in the complete circuit, including connected cords. High current arcing faults can occur from line to neutral or line to ground. These arcing faults are in parallel with the load and produce the most energy of all arcing faults.

The branch feeder type AFCI is required in the 1999 and 2002 National Electrical Code.

The Combination Type AFCI is required in all subsequent editions of the National Electrical Code.

**Combination Type Arc Fault Circuit Breakers**
A combination type arc fault circuit interrupter is a device that offers mitigation of high current arcing faults in the complete circuit, including connected cords. In addition it provides direct detection of persistent low current arcing faults down to 5 amps with associated mitigation of fire hazards in the cords connected to the outlets. High current arcing faults can occur from line to neutral or line to ground. These arcing faults are in parallel with the load and produce the most energy of all arcing faults. The current level of low current arcing faults is limited by the load.

**Ground Fault Circuit Breakers—Ground Fault Application Notes**
Single-pole Type CHGFIs are designed for use in two-wire, 120 Vac circuits. The diagram on **Page V1-T1-40** shows a typical wiring configuration.

Two-pole Type CHGFIs are designed for use in three-wire, 120/240 Vac circuits, 120 Vac multiwire circuits employing common, neutral and two-wire, 240 Vac circuits obtained from a 120/240 Vac source.

Diagrams on **Page V1-T1-40** illustrate typical wiring configurations for 120/240 Vac multiwire circuits.

The diagram on **Page V1-T1-40** depicts a 240 Vac, two-wire circuit. Note the "panel neutral" conductor connects to the neutral bar, even though the neutral is not included in the load circuit. This connection is necessary to supply a 120 Vac power source to the ground fault sensing circuit.

The figures are shown with a 120/240 Vac, single-phase, three-wire power source, but are also applicable to a 120/208 Vac, three-phase, four-wire power supply. For all figures, the electrical operation of the Type CHGFI is not affected by the equipment ground.

### Features

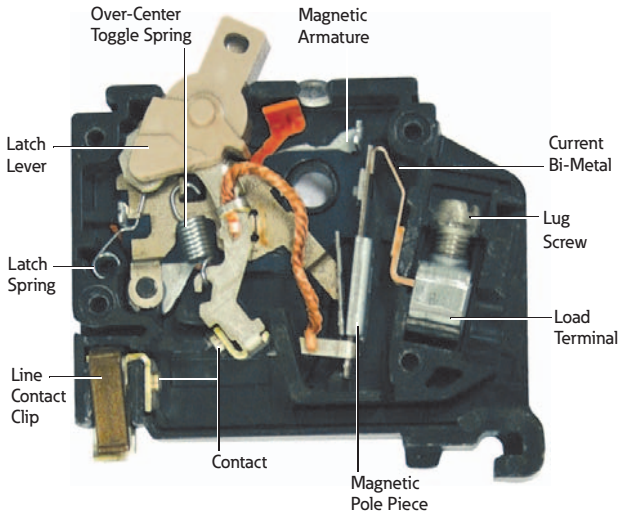

1

## Product Selection

***10 kAIC, 120 Vac, 120/240 Vac and 240 Vac***

**Type CH Plug-On Circuit Breakers**

### Type CH Breakers, 3/4-Inch (19.1 mm) per Pole 120, 120/240 or 240 Vac, 10 kAIC

| Ampere Rating | Wire Size Range Cu/Al 60 °C or 75 °C | Catalog Number<br>Single-Pole 120/240 Vac Requires One 3/4-Inch (19.1 mm) Space 10 per Shelf Carton | Two-Pole 120/240 Vac Common Trip Requires Two 3/4-Inch (19.1 mm) Spaces 5 per Shelf Carton | Three-Pole 240 Vac Common Trip Requires Three 3/4-Inch (19.1 mm) Spaces 5 per Shelf Carton |
|---|---|---|---|---|
| 10 | (1) #14–8 ①<br>(2) #14–10 ①②<br>(1) #14–6 ③ | **CH110** | **CH210** | **CH310** |
| 15 | | **CH115** ⑦⑧ | **CH215** ⑧ | **CH315** ⑧ |
| 20 | | **CH120** ⑦⑧ | **CH220** ⑧ | **CH320** ⑧ |
| 25 | | **CH125** ⑧ | **CH225** ⑧ | **CH325** ⑧ |
| 30 | | **CH130** ⑧ | **CH230** ⑧ | **CH330** ⑧ |
| 35 | #14–2 ①<br>#14–6 ③ | **CH135** ⑧ | **CH235** ⑧ | **CH335** ⑧ |
| 40 | #10–1/0 ④<br>#14–2 ⑤<br>#3/0 ⑥ | **CH140** ⑧ | **CH240** ⑧ | **CH340** ⑧ |
| 45 | | **CH145** ⑧ | **CH245** ⑧ | **CH345** ⑧ |
| 50 | | **CH150** ⑧ | **CH250** ⑧ | **CH350** ⑧ |
| 60 | | **CH160** | **CH260** | **CH360** |
| 70 | | **CH170** | **CH270** | **CH370** |
| 80 | | — | **CH280** | **CH3080** |
| 90 | | — | **CH290** | **CH3090** |
| 100 | | — | **CH2100** | **CH3100** |
| 110 | | — | **CH2110** | — |
| 125 | | — | **CH2125** | — |

**Type CH Plug-On Circuit Breakers**

### CHF Breakers with Mechanical Trip Flag

| Ampere Rating | Wire Size Range Cu/Al 60 °C or 75 °C | Catalog Number<br>Single-Pole 120/240 Vac Requires One 3/4-Inch (19.1 mm) Space 10 per Shelf Carton | Two-Pole 120/240 Vac Common Trip Requires Two 3/4-Inch (19.1 mm) Spaces 5 per Shelf Carton |
|---|---|---|---|
| 10 | (1) #14–8 ①<br>(2) #14–10 ①② | **CHF110** | **CHF210** |
| 15 | | **CHF115** ⑦⑧ | **CHF215** ⑧ |
| 20 | | **CHF120** ⑦⑧ | **CHF220** ⑧ |
| 25 | | **CHF125** ⑧ | **CHF225** ⑧ |
| 30 | | **CHF130** ⑧ | **CHF230** ⑧ |
| 35 | #14–2 ① | **CHF135** ⑧ | **CHF235** ⑧ |
| 40 | #10–1/0 ④<br>#14–2 ⑤ | **CHF140** ⑧ | **CHF240** ⑧ |
| 45 | | **CHF145** ⑧ | **CHF245** ⑧ |
| 50 | | **CHF150** ⑧ | **CHF250** ⑧ |

***Notes***

① For single- and two-pole breakers.
② Solid and stranded wire can be used together.
③ For three-pole breakers.
④ Single-pole 60–70 A, two-pole 80–125 A, three-pole 40–100 A.
⑤ Single-pole 40–50 A, two-pole 40–70 A.
⑥ Two-pole 150 A.
⑦ Switching duty rated.
⑧ HACR rated.

For factory-installed options, refer to **Page V1-T1-39.**

### *Type CH AF/GF Single-Pole Circuit Breaker*

**Type CH AFCI Single-Pole Circuit Breaker**

## Dual Purpose Arc Fault/Ground Fault 3/4-Inch (19.1 mm) Wide Circuit Breakers, Type CH, 120 Vac—10 kAIC ①②

| Poles | Ampere Rating | Configuration | Catalog Number |
|---|---|---|---|
| Single-pole 10 kAIC | 15 | Combination AFCI GFCI | **CHFAFGF115** ③ |
| | 20 | Combination AFCI GFCI | **CHFAFGF120** ③ |
| Single-pole, plug-on neutral 10 kAIC | 15 | Combination AFCI GFCI | **CHFAFGF115PN** |
| | 20 | Combination AFCI GFCI | **CHFAFGF120PN** |

### *Plug-On Branch Feeder Type Arc Fault Circuit Breakers, Type CH 10 kAIC, 120 Vac and 120/240 Vac*

**Type CH AFCI Single-Pole Circuit Breaker**

## Combination Type CH AFCI 3/4-Inch (19.1 mm) Wide Circuit Breakers

| Poles | Ampere Rating | Catalog Number |
|---|---|---|
| **Standard Pigtail** | | |
| Single-pole 10 kAIC | 15 | **CHFCAF115** |
| | 20 | **CHFCAF120** |
| Two-pole 10 kAIC | 15 | **CH215CAF** |
| | 20 | **CH220CAF** |

**Type CH AFCI Single-Pole Circuit Breaker**

## Branch Type CH AFCI 3/4-Inch (19.1 mm) Wide FIRE-GUARD® Circuit Breakers

| Poles | Ampere Rating | Configuration | Catalog Number |
|---|---|---|---|
| Single-pole 10 kAIC | 15 | AFCI | **CH115AF** ③ |
| | 20 | AFCI | **CH120AF** ③ |
| Two-pole 10 kAIC ④⑤ | 15 | AFCI common trip | **CH215AF** |
| | 20 | AFCI common trip | **CH220AF** |

### *Plug-On Combination Type Arc Fault Circuit Breakers and Ground Fault, Type CH 10 kAIC, 120 Vac and 120/240 Vac* ⑥

**Type CH AFCI Single-Pole PON Combo Circuit Breaker**

## Combination Type CH AFCI 3/4-Inch (19.1 mm) and CHGFCI Circuit Breakers

| Poles | Ampere Rating | Configuration | Catalog Number |
|---|---|---|---|
| Single-pole 10 kAIC | 15 | AFCI plug-on neutral | **CHFCAF115PN** |
| | 20 | AFCI plug-on neutral | **CHFCAF120PN** |
| | 15 | GFCI plug-on neutral | **CHFGF115PN** |
| | 20 | | **CHFGF120PN** |
| | 25 | | **CHFGF125PN** |
| | 30 | | **CHFGF130PN** |

***Notes***

① Breaker qualifies as combination arc fault, per UL 1699.
② Breaker qualifies as personnel protection ground fault, (5 mA) per UL 943.
③ Clamshell packaging available with CS modification code on the end of catalog number.
④ Common trip refers to two-pole 240 V load application sourced by 120/240 Vac (see diagram on **Page V1-T1-40**).
⑤ Independent trip refers to two-pole multi-wire, home run or shared neutral circuits (see diagrams on **Page V1-T1-40**).
⑥ Requires plug-on neutral loadcenter.

### *Plug-On Ground Fault Circuit Breakers, Type CH 10 kAIC, 120 Vac and 120/240 Vac*

**Type CH Single-Pole**

## Type CH Ground Fault Circuit Breakers (5 Milliampere) 3/4-Inch (19.1 mm) per Pole 120 Vac or 120/240 Vac,10 kAIC

| Ampere Rating | Wire Size Range Cu/Al 60 °C or 75 °C ① | Catalog Number—1 per Shelf Carton<br>Single-Pole 120 Vac Requires One 3/4-Inch (19.1 mm) Space | Two-Pole 120/240 Vac Common Trip Requires Two 3/4-Inch (19.1 mm) Spaces |
|---|---|---|---|
| 15 | #14–6 | CHFGF115 | CH215GF |
| 20 | #14–6 | CHFGF120 | CH220GF |
| 25 | #14–6 | CHFGF125 | CH225GF |
| 30 | #14–6 | CHFGF130 | CH230GF |
| 35 | #14–6 | — | CH235GF |
| 40 | #14–6 | — | CH240GF |
| 45 | #14–6 | — | CH245GF |
| 50 | #14–6 | — | CH250GF |
| 60 | #14–6 ① | — | CH260GF |

**Type CH Two-Pole**

## Type CH Ground Fault Equipment Protectors (30 Milliampere) 3/4-Inch (19.1 mm) per Pole 120 Vac or 120/240 Vac, 10 kAIC

| Ampere Rating | Wire Size Range Cu/Al 60 °C or 75 °C ① | Catalog Number—1 per Shelf Carton<br>Single-Pole 120 Vac Requires One 3/4-Inch (19.1 mm) Space | Two-Pole 120/240 Vac Common Trip Requires Two 3/4-Inch (19.1 mm) Spaces |
|---|---|---|---|
| 15 | #14–6 | CHFEP115 | CH215EPD |
| 20 | #14–6 | CHFEP120 | CH220EPD |
| 25 | #14–6 | CHFEP125 | — |
| 30 | #14–6 | CHFEP130 | CH230EPD |
| 40 | #14–6 | — | CH240EPD |
| 50 | #14–6 | — | CH250EPD |
| 60 | #14–6 ① | — | CH260EPD |

### *Type CH Switching Neutral Breakers—10 kAIC, 120 Vac and 120/240 Vac*

Used to open the neutral along power line(s) for applications of gas pumps.

**CH220SW**

## 3/4-Inch (19.1 mm) per Pole 120/240 or 240 Vac, 10 kAIC

| Ampere Rating | Wire Size Range Cu/Al 60 °C or 75 °C | Catalog Number—1 per Shelf Carton<br>Two-Pole 120 Vac Common Trip Requires Two 3/4-Inch (19.1 mm) Spaces<br>(Hot leg) Neutral Out Neutral In | Three-Pole 120/240 Vac Common Trip Requires Three 3/4-Inch (19.1 mm) Spaces<br>Phase Phase Neutral Out Neutral In |
|---|---|---|---|
| 15 | #14–8 | CH215SW ② | CH315SW ③ |
| 20 | #14–8 | CH220SW ② | CH320SW ③ |
| 30 | #14–8 | CH230SW ② | CH330SW ③ |
| 40 | #14–8 | CH240SW ② | CH340SW ③ |
| 50 | #14–8 | CH250SW ② | CH350SW ③ |

***Notes***

① 60 A breaker listed for 75 °C Cu wire only.

② For circuit breakers with shunt trip, add ST suffix. Shunt trip requires one additional pole space.

③ Switching duty rated.

***Type CH-HID Circuit Breakers—10 kAIC, 120 Vac, 120/240 and 240 Vac***

Suitable for use in circuits for fluorescent and high intensity discharge lighting. Also suitable for HACR applications.

### 3/4-Inch (19.1 mm) per Pole 120 Vac, 120/240 and 240 Vac, 10 kAIC

| Ampere Rating | Wire Size Range Cu/Al 60 °C or 75 °C | Single-Pole 120/240 Vac Requires One 3/4-Inch (19.1 mm) Space<br>10 per Shelf Carton Catalog Number | Two-Pole 240 Vac Common Trip Requires Two 3/4-Inch (19.1 mm) Spaces<br>5 per Shelf Carton Catalog Number | Three-Pole 240 Vac Common Trip Requires Three 3/4-Inch (19.1 mm) Spaces<br>5 per Shelf Carton Catalog Number |
|---|---|---|---|---|
| 15 | #14–8 | **CH115HID** | **CH215HID** ① | **CH315HID** |
| 20 | #14–8 | **CH120HID** | **CH220HID** | **CH320HID** |
| 30 | #14–8 | **CH130HID** | **CH230HID** | **CH330HID** |

***Type CHT Twin 10 kAIC, 120/240 Vac, Universal CTL and Non-CTL Plug-On Circuit Breakers***

Suitable for CTL and Non-CTL CH loadcenters.

**Type CH and CHT Circuit Breakers Mounted in Twin Breaker Panel**

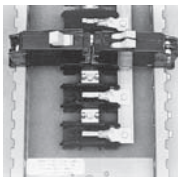

### Twin (CTL) 3/4-Inch (19.1 mm) per Pole 120 Vac Class CTL 10 kAIC

| Ampere Rating | Wire Size Range Cu/Al 60 °C or 75 °C | Single-Pole Requires One 3/4-Inch (19.1 mm) Space<br>10 per Shelf Carton Catalog Number<br>120/240 Vac 120/240 Vac |
|---|---|---|
| 15–15 | #14–8 | **CHT1515** ②③ |
| 15–20 | #14–8 | **CHT1520** ②③ |
| 20–20 | #14–8 | **CHT2020** ②③ |

***Notes***

① CH215HID is rated for 120/240 V.
② Switching duty rated.
③ HACR rated.

### *Type CHP Commercial Breakers—10 kAIC, 120 Vac, 120/240 Vac and 240 Vac*

**Note:** CHP breakers feature on-off and trip positions for commercial applications.

#### 3/4-Inch (19.1 mm) per Pole 120, 120/240 or 240 Vac, 10 kAIC

| Ampere Rating | Wire Size Range Cu/Al 60 °C or 75 °C | Single-Pole 120/240 Vac Requires One 3/4-Inch (19.1 mm) Space<br>10 per Shelf Carton Catalog Number | Two-Pole 120/240 Vac Common Trip Requires Two 3/4-Inch (19.1 mm) Spaces<br>5 per Shelf Carton Catalog Number | Three-Pole 240 Vac Common Trip Requires Three 3/4-Inch (19.1 mm) Spaces<br>5 per Shelf Carton Catalog Number |
|---|---|---|---|---|
| 10 | (1) #14–8 ① (2) #14–10 ①② (1) #14–6 ③ | **CHP110** | **CHP210** | **CHP310** |
| 15 | | **CHP115** ⑥⑦ | **CHP215** ⑦ | **CHP315** ⑦ |
| 20 | | **CHP120** ⑥⑦ | **CHP220** ⑦ | **CHP320** ⑦ |
| 25 | | **CHP125** ⑦ | **CHP225** ⑦ | **CHP325** ⑦ |
| 30 | | **CHP130** ⑦ | **CHP230** ⑦ | **CHP330** ⑦ |
| 35 | #14–2 ① #14–6 ③ | **CHP135** ⑦ | **CHP235** ⑦ | **CHP335** ⑦ |
| 40 | #10–1/0 ④ #14–2 ⑤ | **CHP140** ⑦ | **CHP240** ⑦ | **CHP340** ⑦ |
| 45 | | **CHP145** ⑦ | **CHP245** ⑦ | **CHP345** ⑦ |
| 50 | | **CHP150** ⑦ | **CHP250** ⑦ | **CHP350** ⑦ |
| 60 | | **CHP160** ⑦ | **CHP260** ⑦ | **CHP360** ⑦ |
| 70 | | **CHP170** | **CHP270** | **CHP370** |
| 80 | | — | **CHP280** | — |
| 90 | | — | **CHP290** | — |
| 100 | | — | **CHP2100** | **CHP3100** |
| 110 | | — | **CHP2110** | — |
| 125 | | — | **CHP2125** | — |

### *Type CHP-GFCI Circuit Breakers—10 kAIC, 120 Vac and 120/240 Vac*

**Note:** CHP breakers offer on-off and trip positions for commercial applications.

#### 5 Milliampere—3/4-Inch (19.1 mm) per Pole 120 V and 120/240 Vac, 10 kAIC

| Ampere Rating | Wire Size Range Cu/Al 60 °C or 75 °C | Single-Pole 120 Vac Requires One 3/4-Inch (19.1 mm) Space<br>1 per Individual Carton Catalog Number |
|---|---|---|
| 15 | #14–6 | **CHP115GF** |
| 20 | #14–6 | **CHP120GF** |
| 30 | #14–6 | **CHP130GF** |

***Notes***

① For single- and two-pole breakers.
② Solid and stranded wire can be used together.
③ For three-pole breakers.
④ Single-pole 60–70 A, two-pole 80–125 A, three-pole 40–100 A.
⑤ Single-pole 40–50 A, two-pole 40–70 A.
⑥ Switching duty rated.
⑦ HACR rated.

CHP breakers offer on-off and trip positions for commercial applications.

### *Type CHP Neutral Switching Breakers—10 kAIC, 120 Vac and 120/240 Vac*

Used to open the neutral along power line(s) for applications of gas pumps.

#### 3/4-Inch (19.1 mm) per Pole 120 or 120/240 Vac, 10 kAIC

| Ampere Rating | Wire Size Range Cu/Al 60 °C or 75 °C | Two-Pole 120 Vac Common Trip Requires Two 3/4-Inch (19.1 mm) Spaces<br>1 per Shelf Carton<br>Catalog Number<br>(Hot leg)<br>Neutral Out<br>Neutral In | Three-Pole 120/240 Vac Common Trip Requires Three 3/4-Inch (19.1 mm) Spaces<br>1 per Shelf Carton<br>Catalog Number<br>Phase<br>Phase<br>Neutral Out<br>Neutral In |
|---|---|---|---|
| 15 | #14–8 | **CHP215SW** ① | **CHP315SW** ① |
| 20 | #14–8 | **CHP220SW** ① | **CHP320SW** ① |

### *Type CH-M50 High Ambient Breaker*

#### 3/4-Inch (19.1 mm) per Pole 120 or 120/240 Vac, 10 kAIC

| Ampere Rating | Wire Size Range Cu/Al 60 °C or 75 °C | Single-Pole 120/240 Vac Requires One 3/4-Inch (19.1 mm) Space<br>10 per Shelf Carton<br>Catalog Number | Two-Pole 120/240 Vac Common Trip Requires Two 3/4-Inch (19.1 mm) Spaces<br>5 per Shelf Carton<br>Catalog Number |
|---|---|---|---|
| 15 | (1) #14–8<br>(2) #14–10 | **CH115M50** | **CH215M50** |
| 20 | | **CH120M50** | **CH220M50** |
| 25 | | **CH125M50** | **CH225M50** |
| 30 | | **CH130M50** | **CH230M50** |
| 35 | | **CH135M50** | **CH235M50** |
| 40 | | **CH140M50** | **CH240M50** |
| 45 | | **CH145M50** | **CH245M50** |
| 50 | | **CH150M50** | **CH250M50** |
| 60 | | — | **CH260M50** |
| 70 | | — | **CH270M50** |

### *Type CH-HM and CHP-HM High Magnetic Breakers*

#### 3/4-Inch (19.1 mm) per Pole 120 or 120/240 Vac, 10 kAIC

| Ampere Rating | Wire Size Range Cu/Al 60 °C or 75 °C | Single-Pole 120/240 Vac Requires One 3/4-Inch (19.1 mm) Space<br>10 per Shelf Carton<br>Catalog Number | Two-Pole 120/240 Vac Common Trip Requires Two 3/4-Inch (19.1 mm) Spaces<br>5 per Shelf Carton<br>Catalog Number |
|---|---|---|---|
| 15 | (1) #14–8<br>(2) #14–10 | **CH115HM** | **CH215HM** |
| 20 | | **CH120HM** | **CH220HM** |
| 15 | (1) #14–8<br>(2) #14–10 | **CHP115HM** | **CHP215HM** |
| 20 | | **CHP120HM** | **CHP220HM** |

***Note***

① For circuit breakers with shunt trip, add ST suffix. Shunt trip requires one additional pole space, obtain pricing from **Page V1-T1-39**.

## 1 Options and Accessories

CHHT

CHPL

CHPLGF

MCBPL

CHLO

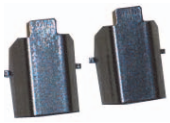

CH125RB

CH9MB270

CHML

### Field Installation Kits and Parts

| Description | Ordering Quantity ① | Catalog Number |
|---|---|---|
| **Handle Ties ②** | | |
| Handle tie bar for physically joining the handles of two adjacent single-pole Type CH circuit breakers (molded plastic handle cover) | 25 | **CHHT** |
| **Handle Lockoffs ③④** | | |
| Padlockable device for locking the handle of single-, two- or three-pole Type CH circuit breakers (escutcheon mounted) ⑤ | 1 | **CHPL** |
| Padlockable device for locking the handle of a single-, two- or three-pole Type CHGFI circuit breaker (escutcheon mounted) ⑤ | 1 | **CHPLGF** |
| Padlockable device for locking the handle of main circuit breaker Types CC and CCH into the ON or OFF position.(screw mounted) ⑥ | 1 | **CCPL** |
| Padlockable device for locking the handle of main breaker Types BW and CSR into the ON or OFF position (escutcheon mounted) ⑤ | 1 | **MCBPL** |
| **Handle Lockdogs ④⑦** | | |
| Device used to secure handle in ON or OFF position for single-pole Type CH circuit breakers (handle mounted) ⑧ | 10 | **CHLO** |
| **Hold-Down Kits ⑨** | | |
| Hold-down retainer kit for single-, two-, three-pole Type CH circuit breakers. For 6–24 circuit 125 A single- and three-phase, 12–42 circuit single-phase 225 A and 24–42 circuit three-phase 225 A MLO Type CH loadcenters | 1 | **CH125RB** |
| Hold-down retainer kit for single-, two-, three-pole Type CH circuit breakers for 2–4 circuit MLO CH loadcenters. | 1 | **CH125RB24** |
| **Mounting Bases** | | |
| Mounting base for two-pole Type CH circuit breaker—70 A maximum | 1 | **CH9MB270** |
| **Main Breaker Lug Kits** | | |
| Types CC and CCH main breaker lug kit (2) 300 kcmil | 1 | **CCL300** |
| Type CSR main breaker lug kit (2) 300 kcmil | 1 | **MCBL300** |
| **Mechanical Interlock** | | |
| Type CH for two-, three- and four-pole breakers | 10 | **CHML ⑩** |

***Notes***

① Must be purchased in multiples of ordering quantities indicated.
② Handle ties: typically used to join two similar independent single-pole breakers to form a two-pole noncommon trip breaker.
③ Handle lockoffs: devices that use a padlock to lock the circuit breaker's handle in the ON or OFF position.
④ Requires one additional pole space.
⑤ Escutcheon mounted: device mounted semipermanently to the face of the circuit breaker and secured by the loadcenter deadfront.
⑥ Screw mounted: device permanently mounted to the face of the circuit breaker by the use of a non-removable screw.
⑦ Handle lockdogs: devices that are used to secure a circuit breaker's handle in the ON or OFF position. Handle lockdogs are not padlockable devices.
⑧ Handle mounted: device mounted above or below handle using spring pressure.
⑨ Hold-down kits: devices used to secure the circuit breaker to the loadcenter for back-feed main application. See NEC Article 384.16(g).
⑩ CHML not suitable to transfer emergency power.

## Shunt Trip Options

| Description Type | Volts | Catalog Number Suffix Adder ① |
|---|---|---|
| CSR | 12 DC | **SR12** |
| CSR | 24 DC | **SR24** |
| CSR | 120 AC | **SR01** |
| CH | 120 AC | **ST** ② |
| CC | 12 DC | **SR12** |
| CC | 24 DC | **SR24** |
| CC | 120 AC | **SR01** |
| CC | 208 AC | **SR08** |
| CC | 240 AC | **SR02** |

## Handle Position Changeability Chart

| | To Change Handle Position from ON to OFF or OFF to ON You Must... | | |
|---|---|---|---|
| **Handle Lockoff and Lockdog Types** | **Remove Padlock** | **Remove Device** | **Remove Loadcenter Deadfront** |
| Lockoff escutcheon mounted | Remove | — | — |
| Lockoff screw mounted | Remove | — | — |
| Lockdog handle mounted | N/A | Remove | — |

***Notes***

① Add suffix indicated to end of breaker catalog number.

② Requires one additional pole space.

## Technical Data and Specifications

### *Ratings*

Single- and two-pole CH breakers rated 15 and 20 A have low instantaneous magnetic trip levels. The 15 and 20 A breakers with "HM" suffix have high magnetic trip settings recommended for circuits with inherently high inrush currents. All Type CH breakers are marked for heating, air conditioning and refrigeration (HACR) equipment application. Single-pole 15–20 A breakers are also suitable for switching duty (SWD). Shunt trip coils operate on 120 Vac and require one additional pole space per breaker.

## Wiring Diagrams

### Typical Single-Pole

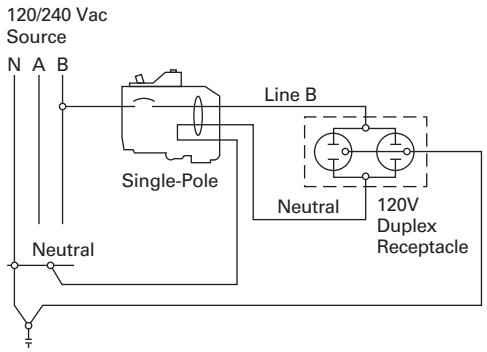


### Two-Pole 240 V Load Application Sourced by 120/240 Vac

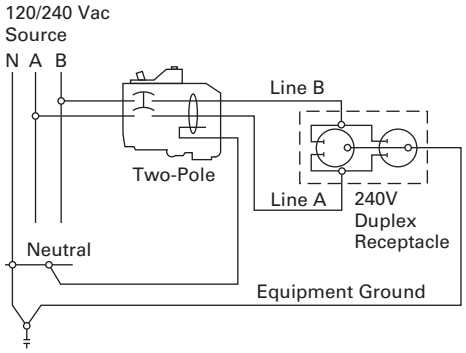


### Single-Pole 120 V Load Application Sourced by 120/240 Vac

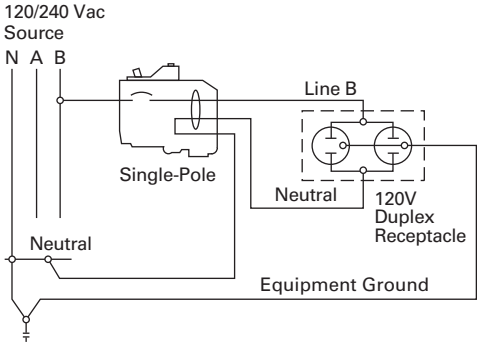


### Two-Pole Shared Neutral with Duplex Receptacle Application

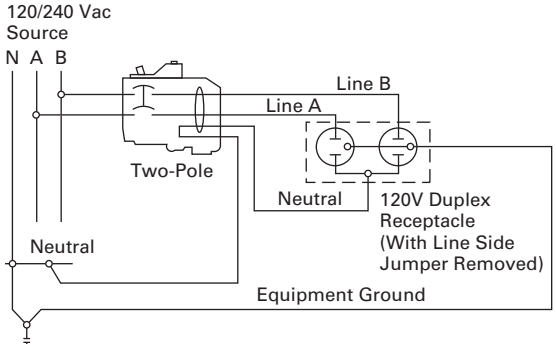


### Two-Pole Shared Neutral with Multi-Duplex Receptacle Application

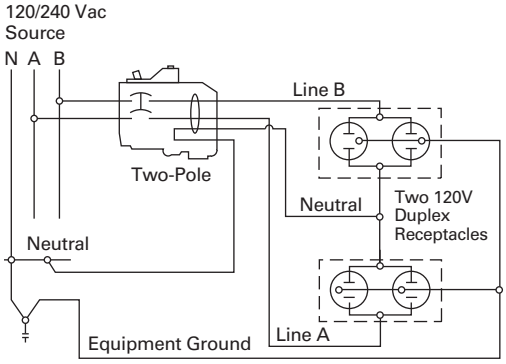


### Single-Pole 120 V Duplex Receptacle Application

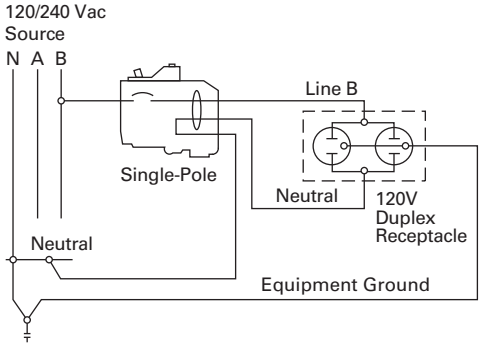

### Two-Pole 120 V Multi-Duplex Receptacle Application

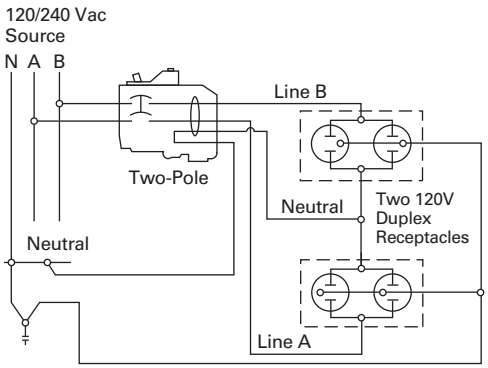


### Two-Pole 120 V Duplex Receptacle Application

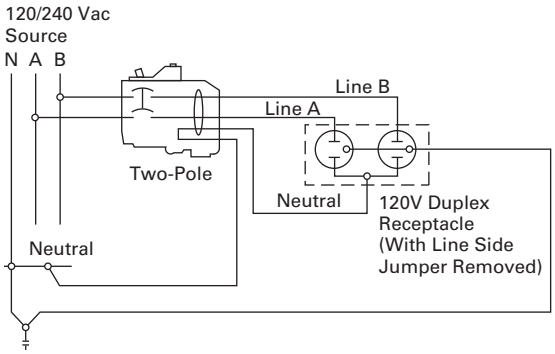


### Two-Pole 240 V Duplex Receptacle Application

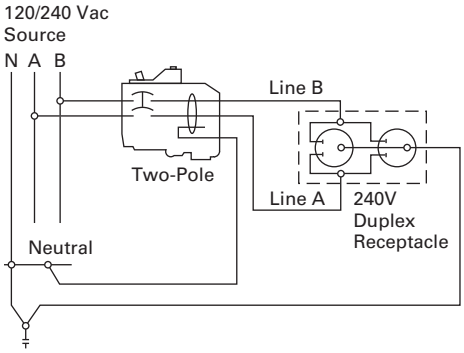

**Type BR Loadcenters and Circuit Breakers**

## Contents


| *Description* | *Page* |
|---|---|
| Overview | |
| Product Description | **V1-T1-43** |
| Features, Benefits and Functions | **V1-T1-43** |
| Standards and Certifications | **V1-T1-45** |
| Catalog Number Selection | **V1-T1-45** |
| Product Selection | **V1-T1-46** |
| BR Specialty Products | |
| BR Quick Connect Neutral Loadcenters | **V1-T1-57** |
| Spa Panels | **V1-T1-58** |
| Riser Panel | **V1-T1-59** |
| Type BR Renovation Loadcenter | **V1-T1-60** |
| Type BR Mechanical Interlock Kits | **V1-T1-62** |
| Type BR Retrofit Interior Kits | **V1-T1-73** |
| BR Circuit Breakers | **V1-T1-76** |


# Overview

## Product Selection Guide

### BR Loadcenters

**Description**

| | |
|---|---|
| **Service** | |
| Single-phase, three-wire, 120/240 Vac | Three-phase, four-wire, 208Y/120 Vac<br>Three-phase, three-wire, 240 Vac delta |
| **Short-Circuit Current Rating** | |
| 10 kAIC: All single- and three-phase loadcenters 70–225 A, 8 to 42 circuits<br>22 kAIC: All convertible loadcenters using 125 A rated Type BRH main breakers or selected factory installed 125 A rated Type BRH main breaker | 25 kAIC: All convertible and factory-installed single-phase loadcenters rated 150 and 200 A using Type CSR main breakers |
| **Main Breaker/Main Lug Loadcenters** | |
| Single-phase<br>Main breaker: 100, 125, 150, 200, 225, 400, 600 A<br>Main lugs: 70, 125, 150, 200, 225, 400, 600 A | Three-phase<br>Main breaker: 100, 125, 150, 200, 225, 400, 600 A<br>Main lugs: 100, 125, 150, 200, 225, 400, 600 A |
| **Convertible Loadcenters** | |
| Main breaker: single-phase up to 200 A and three-phase up to 225 A | Main lugs: single-phase up to 200 A and three-phase up to 150 A |
| **Branch Breakers** | |
| Types BR, BRH and BRHH: 10–150 A. single-, two- and three-pole; selected amperage available in switching duty, HACR, shunt trip and high magnetic setting<br>Type GFCB: 15–60 A<br>Types BJ and BJH: 125–225 A; two- and three-pole<br>Type BD Twin: 10–50 A; two of one-pole; take one 1-inch (25.4 mm) space | Type BQ and BQC Multibreaker: 15–30 A. Two of two-pole or one two-pole and two one-pole; takes two 1-inch (25.4 mm) spaces<br>Type BRW: 15–30 A; two-pole water heater breakers<br>Type BRSN: 15–30 A; two-pole switching neutral breakers<br>Type BR 15–100 A; two-pole, 240 Vac delta breakers<br>BR-AFCI arc fault circuit interrupter |
| **Enclosures** | |
| NEMA Type 1 indoor<br>NEMA Type 3R outdoor | NEMA 4X<br>Meets or exceeds UL requirements for indoor or outdoor applications |
| **Loadcenter and Breaker Accessories** | |
| Branch circuit breaker:<br>Auxiliary components, Hold-down kits, Handle ties, Lockoffs, Lockdogs<br>Complete line of ground bar kits 5, 10, 14 and 21 circuit, some with additional #2/0 lugs; each terminal will accommodate: (3) #14–#10 Cu/Al or (1) #14–#4 Cu/Al<br>Main and sub-feed lugs 125, 150, 225 A—two- and three-pole<br>Shunt trips | Surge protection:<br>Single-phase plug-on surge protector, Single-phase bottle type surge protector, Three-phase bottle type surge protector, Single-phase whole home surge protector<br>Universal rainproof conduit hubs<br>Group One: 3/4, 1, 1-1/4, 1-1/2, 2 inches (19.1, 25.4, 31.8, 38.1, 50.8 mm)<br>Group Two: 2, 2-1/2, 3 inches (50.8, 63.5, 76.2 mm)<br>Adapter plate |
| **Bussing** | |
| Tin-plated aluminum as standard | Limited copper bus panels available |

## Product Description

Loadcenters are enclosures specifically designed to house the branch circuit breakers and wiring required to distribute power to individual circuits. They contain either a main breaker when used at the service entrance point or a main lug when used as a sub-panel to add circuits to existing service. The main breaker protects the main entire panel and can be used as a service disconnect. The branch breakers protect the wires leading to individual electrical loads such as fixtures and outlets.

## Features, Benefits and Functions

### *Loadcenter Construction*

Eaton's Type BR loadcenters have standard tin-plated aluminum bus with a limited availability of copper bus. The sum of the handle ratings connected to any stab is limited to 150 A maximum on the 100 and 125 A loadcenters, and 200 A on loadcenters with 150 A or higher main bus. NEMA Type 1 boxes or enclosures are manufactured from galvanized steel. Raintight boxes are manufactured from galvanized steel, then finished using an electrostatic powder coat, baked urethane paint process.

### *Neutrals*

Eaton Type CH loadcenters feature two types of neutrals:

#### *Insulated/Bondable Split Neutral*

Panels are supplied with split insulated neutrals with an insulated cross strap. For service entrance applications, the neutral must be bonded by using the bonding strap supplied with the panel. For non-service entrance (sub-panel) applications, the panel may be installed with the bonding strap not connected to the neutral. Separate ground bars must be used on non-service entrance panels.

#### *Insulated/Bondable Single Neutral*

Panels are supplied with a single insulated neutral. For service entrance applications, all that is required to bond the neutral is to loosen the bonding screw and the neutral screw directly beside it, insert the bonding strap into the neutral bar, and re-tighten both connections. The single neutral can be moved by the contractor to the other side of the panel, if desired. When used as a service entrance panel, unused neutral connections may be used for the termination of equipment grounds. For non-service entrance (sub-panel) applications, the panel may be installed with the bonding strap not connected to the neutral. Separate ground bars must be used on non-service entrance panels.

### *Grounds*

In service entrance applications where the neutral is bonded, unused neutral holes may be used for terminating ground conductors. In sub-feed panels, the neutral must be isolated (non-bonded), and ground wires must be terminated on a separate ground bar.

The insulated/bondable single/split neutral panels have sufficient terminations for both ground and neutral conductors. The insulated/bondable single split neutral panels are supplied with a separate factory-installed ground bar if the catalog number contains a "G." If not, a separate ground bar should be installed. Insulated/Bondable Single Neutral panels are supplied without a ground bar (unless otherwise noted), and ground bar kits if needed must be purchased separately.

### *Neutral and Ground Terminals*

The standard terminals on grounds and neutrals are rated to accept (3) #14–#10 Cu/Al or (1) #14–4, provided the cables terminated are of the same material. For larger cables, add-on neutral lugs may be ordered from the accessories on **Page V1-T1-66**.

**Note:** NEC allows only one current-carrying conductor per hole on neutrals unless otherwise noted.

### *Bottom Fed Loadcenters*

For single-phase 225 A and below loadcenters that are bottom fed, a standard panel can be rotated 180 degrees to allow straight-in wiring of power cables to the main terminals. Because the main circuit breaker handle operates horizontally, the orientation of the main circuit breaker handle is consistent with the requirements of NEC 2008 Article 240.81.

### *Gutter Splicing*

Loadcenters are not UL listed as wiring troughs. Therefore, gutter splicing of riser cables to tap off to the main device is not permitted. Refer to NEC 2008 Article 312.8.

### *Fire Rating*

Due to the numerous openings in both loadcenter boxes and trims, they should not be mounted in firewalls. There is no approved method for sealing the enclosures for this application.

### *Date Code*

The date of manufacture of each loadcenter is printed on the outside of the carton as well as inside the loadcenter. On the carton, the date code is printed on the end carton label. In the loadcenter, the date code is located on the small white label located on the right side wall (with the main device on top).

The date code is in the following format: F # # # &. The "F" is the numeric code for the Lincoln, IL plant, and the three numbers are the year and week of manufacturing, e.g., 023. The "!" sign at the end signifies the decade of the 2010. Therefore, the date code F023& would indicate that the product was manufactured in the 23rd week of 2010. The 1980s are represented by the "+" sign and the 1990s are represented by a "=" at the end of the code.

### *Surge Protectors*

Complete home surge protection is available in multiple options, including a factory-installed option that provides the highest level of surge protection in a residential design. See Tab 3 for more details.

### *Circuit Breaker Case Interrupting Capacity*

- 10 kAIC
- 22 kAIC
- 25 kAIC

### *Warranty Information*

- 10-year limited loadcenter warranty
- 10-year limited branch breaker warranty

1

## Type BR Loadcenter

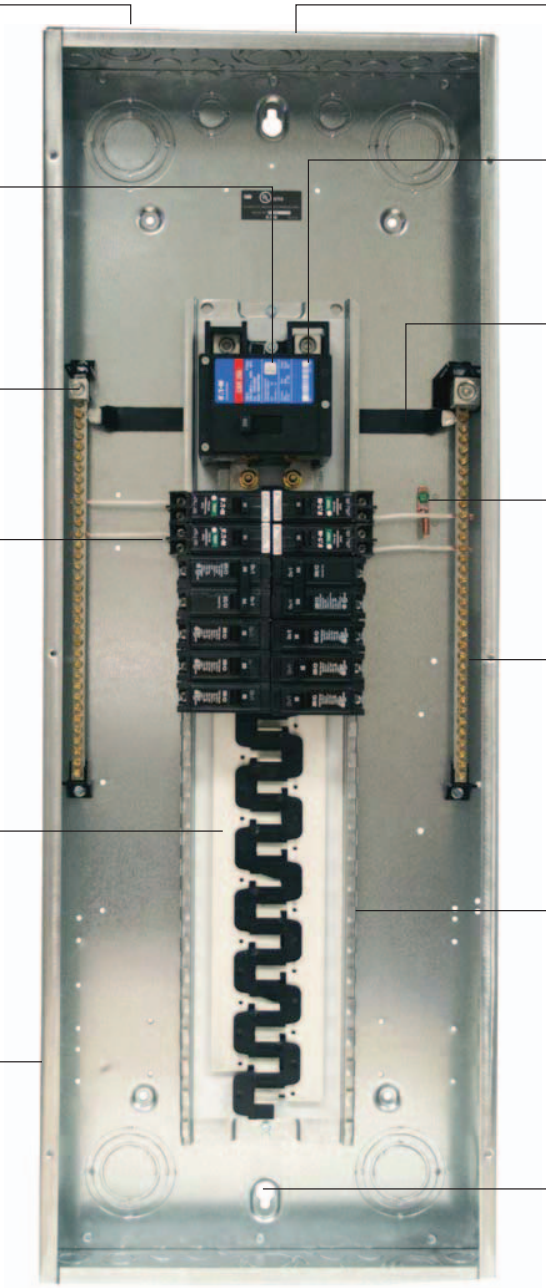

Extra 1.5 inch Knockout (38.1 mm)
- Larger knockout provides easier installation and time savings

Top or Bottom Feed
- Straight-in wiring saves labor and material
- One panel for either top or bottom applications

2/0 Lug
- Easily removable and can be installed in any location on the neutral bar

Type BR AFCI Breakers
- Compact design for easier wiring and improved wireway access
- Optional LED indicates one of six trip codes for circuit diagnostics
- Provides a clean gutter space

Standard Tin-Plated Aluminum Bus
- Excellent conductivity and corrosion resistance
- Copper bus options available for select catalog numbers

Drywall Marking on Enclosure
- Indicates proper mounting depth for flush applications

"Tangential" Center Knockout
- Easier installation for conduit applications

Commercial Grade Main Breaker
- 25 kAIC series rated main breaker for superior protection

Neutral Bus (Strap)
- Is easily removable for sub-panel applications

Bonding Z-Strap
- Provides easy field conversion for service entrance applications

Twin Neutral Bars
- Minimum 150% neutral capacity

Steel Backpan
- Provides solid and reliable breaker mounting—single piece design for stability and durability

Single Keyhole Mounting
- One keyhole at the top and bottom provides easier mounting and leveling

***Warranty***

10-year warranty on all Type BR loadcenters and circuit breakers.

## Standards and Certifications

***UL Listings***

All Eaton Type BR loadcenters are listed under UL File E52977 except the 2–8 circuit loadcenters, up through and including 125 A, which are listed under UL File E8741.

Listed

## Catalog Number Selection

### Single- and Three-Phase Through 600 A

**3 BR _ 30 42 B C 200 _ _**

**Phase**
- **Blank** = Single-phase ①
- **3** = Three-phase

**Eaton's Type BR Loadcenter**

**Factory Options**
- **SUR** = Factory integrated surge

**Number of 1-Inch (25.4 mm) Spaces**

**Maximum Number of Circuits**

**Main Device**
- **B** = Main breaker
- **L** = Main lug
- **N** = Convertible main
- **H** = Main breaker high AIC

**Bus**
- **Blank** = Aluminum bus ①
- **C** = Copper bus

**Amperes**

| | |
|---|---|
| **50** = 50 A | **200** = 200 A |
| **70** = 70 A | **225** = 225 A |
| **100** = 100 A | **300** = 300 A |
| **125** = 125 A | **400** = 400 A |
| **150** = 150 A | **600** = 600 A |

**Enclosure**
- **R** = NEMA Type 3R rainproof
- **S** = NEMA Type 1 indoor with surface trim
- **F** = NEMA Type 1 indoor with flush trim
- **Blank** = NEMA Type 1 indoor with combination trim ①
- **RIS** = Riser panel

**Construction**
- **Blank** = No feed thru lugs ①
- **F** = Feed-through lugs
- **G** = Ground bar
- **P** = Current design
- **NY** = NY City gutter space

***Note***

① No character space used.

1

## Product Selection

### *Single-Phase—Main Circuit Breaker Loadcenters—10/25 kAIC*

**BR4040B200**

### Single-Phase Three-Wire—120/240 Vac—Insulated/Bondable Split Neutral

| Main Breaker Type | Main Ampere Rating | Maximum Number 1-Inch (25.4 mm) Spaces | Maximum Number 1-Inch (25.4 mm) Circuits | Enclosure Type | Box Size | Wire Size Range Cu/Al 60 °C or 75 °C for Main Breaker | Loadcenter Catalog Number with Combination ① or NEMA Type 3R Cover |
|---|---|---|---|---|---|---|---|
| BR 10 kAIC | 100 | 8 | 16 | Indoor | B1 | #4–1/0 ② | **BR816B100** |
| | | 10 | 20 | Indoor | A1 | | **BR1020B100S11** |
| | | 10 | 20 | Indoor | A1 | | **BR1020B100F11** |
| | | 10 | 20 | Outdoor | B2R | | **BR1020B100RF** ③④ |
| | | 12 | 12 | Indoor | B2 | | **BR1212B100** |
| | | 12 | 20 | Indoor | B2 | | **BR1220B100** |
| | | 12 | 24 | Outdoor | B2R | | **BR1224B100R** ④ |
| | | 16 | 16 | Indoor | C1 | | **BR1616B100** |
| | | 16 | 20 | Indoor | C1 | | **BR1620B100** |
| | | 16 | 24 | Outdoor | C1R | | **BR1624B100R** ④ |
| | | 20 | 24 | Outdoor | C3R | | **BR2024B100R** ④ |
| | | 20 | 20 | Indoor | C2 | | **BR2020B100** |
| | | 16 | 24 | Indoor | C1 | | **BR1624B100** |
| | | 30 | 30 | Indoor | D1 | | **BR3030B100** |
| | 125 | 16 | 24 | Indoor | C1 | #4–2/0 | **BR1624B125** |
| | | 20 | 24 | Indoor | C1 | | **BR2024B125** |
| | | 20 | 24 | Outdoor | C3R | | **BR2024B125R** ④ |
| | | 30 | 30 | Indoor | D1 | | **BR3030B125** |
| BRH ⑤ 22 kAIC | 100 | 20 | 24 | Indoor | C2 | #4–1/0 | **BR2024H100** ⑤ |
| CSR ⑥ 25 kAIC | 150 | 8 | 16 | Outdoor | C3R | #2–300 kcmil | **BR816B150RF** ③④ |
| | | 16 | 30 | Indoor | C4 | | **BR1630B150** |
| | | 20 | 30 | Indoor | C4 | | **BR2030B150** |
| | | 20 | 30 | Outdoor | D1R | | **BR2030B150R** ④ |
| | | 20 | 40 | Indoor | D1 | | **BR2040B150** |
| | | 20 | 40 | Outdoor | D1R | | **BR2040B150R** ④ |
| | | 24 | 30 | Indoor | G1 | | **BR2430B150** |
| | | 30 | 30 | Outdoor | G1R | | **BR3030B150R** ④ |
| | | 30 | 30 | Indoor | G1 | | **BR3030B150** |
| | | 30 | 40 | Indoor | G1 | | **BR3040B150** |
| | 200 | 4 | 8 | Outdoor | 8R | #2–300 kcmil | **BR48B200RF** ③⑦⑧ |
| | | 8 | 16 | Outdoor | C3R | | **BR816B200RF** ③④ |
| | | 16 | 32 | Indoor | C4 | | **BR1632B200** |
| | | 20 | 40 | Outdoor | D1R | | **BR2040B200R** ④ |
| | | 20 | 40 | Indoor | D1 | | **BR2040B200** |
| | | 24 | 40 | Indoor | G1 | | **BR2440B200** |
| | | 30 | 40 | Outdoor | G1R | | **BR3040B200R** ④ |
| | | 30 | 40 | Indoor | G1 | | **BR3040B200** ⑨ |
| | | 40 | 40 | Outdoor | L1R | | **BR4040B200R** ④ |
| | | 40 | 40 | Indoor | L1 | | **BR4040B200** |
| | | 40 | 50 | Indoor | L1 | | **BR4050B200** |
| | | 60 | 120 | Indoor | L3 | | **BR60120B200** |
| | | 60 | 120 | Outdoor | L3R | | **BR60120B200R** |
| | 225 | 42 | 42 | Indoor | L2 | #1–250 kcmil | **BR4242B225** |
| | | 42 | 42 | Outdoor | L2R | | **BR4242B225R** ④ |

***Notes***

① Combination style covers may be used in surface or flush applications.
② Wire range size for BR1020B100SP is #6–#1 Cu/Al.
③ Includes through-feed lugs for both phase and neutral conductors.
④ Rainproof panels are furnished with hub closure plates. For rainproof hubs, refer to **Page V1-T1-66**.
⑤ 22 kAIC series combination rating is obtained when Types BD, BR, BQ, BQC and GFCB 10 kAIC branch breakers are used in series with Type BRH main breaker.
⑥ 25 kAIC series combination rating is obtained when Types BD, BR, BQ, BQC and GFCB 10 kAIC branch circuit breakers are used in series with Type CSR main breaker.
⑦ Supplied with adapter plate to use DS Group1 hubs on **Page V1-T1-66**. If 2.50-inch (63.5 mm) hub is needed, remove adapter and use ARP00007CH25 hub.
⑧ Neutral is bonded—suitable for service entrance only—cannot be converted for sub-feed application.
⑨ Add G to the end of the catalog number for factory-installed GBK2120 ground bar.

All main circuit breaker loadcenters are listed for use as service entrance equipment and are shipped with neutral bonding strap preattached. The maximum rating of the panel is the main circuit breaker rating when used as service entrance equipment. Ground bar kits priced separately. See **Page V1-T1-66**.

### *Main Circuit Breaker Loadcenters—10/22 kAIC*

**B4242DFN**

## Single-Phase Three-Wire—120/240 Vac—Insulated/Bondable Split Neutral

| Main Breaker Type | Main Ampere Rating | Maximum Number 1-Inch (25.4 mm) Spaces | Maximum Number 1-Inch (25.4 mm) Circuits | Enclosure Type | Box Size | Wire Size Range Cu/Al 60 °C or 75 °C for Main Breaker | Commercial Loadcenter Catalog Number ①②③ With Flush or NEMA Type 3R Cover | Commercial Loadcenter Catalog Number ①②③ With Surface Cover |
|---|---|---|---|---|---|---|---|---|
| DK ④ | 300 | 42 | 42 | Indoor | 24 | (2) #3/0–250 kcmil | **BR4242B300F** | **BR4242B300S** |
| | 400 | 42 | 42 | Indoor | 24 | (2) #3/0–250 kcmil | **BR4242B400F** | **BR4242B400S** |
| | | 42 | 42 | Outdoor | 47 | (2) #3/0–250 kcmil | **BR4242B400R** ⑤ | — |
| HLD ⑥ | 600 | 42 | 42 | Indoor | 24 | (2) #3/0–500 kcmil | — | **BR4242B600S** |

***Notes***

① Ground bar kits priced separately. See **Page V1-T1-66**.
② The maximum rating of the panel is the main circuit breaker rating when used as service entrance equipment.
③ Door lock and key included with loadcenter.
④ Type DK main circuit breaker is rated 65 kAIC at 240 Vac and allows a 22 kAIC series rating on the panel when Types BR, BD and BJ branch circuit breakers are used.
⑤ Rainproof panels are furnished with hub closure plates. For rainproof hubs, refer to **Page V1-T1-66**.
⑥ Type HLD main circuit breaker is rated 65 kAIC at 240 Vac. Type HLD circuit breaker **is not** series rated with Types BR, BD and BJ branch circuit breakers.

Box sizes **Pages V1-T1-67** through **V1-T1-70**.

Please contact the Lincoln Flex Center for any configurations not listed.

1

### *Single-Phase—Main Lug Loadcenters*

**Surface** **Outdoor**

**Flush** **Outdoor**

**Surface (No Door)**

**Flush (No Door)**

**Outdoor**

## Single-Phase Three-Wire—120/240 Vac—Insulated/Bondable Split Neutral

| Main Ampere Rating | Maximum Number 1-Inch (25.4 mm) Spaces | Circuits | Enclosure Type | Trim Type | Box Size | Wire Size Range Cu/Al 60 °C or 75 °C for Main Lugs | Loadcenter Catalog Number |
|---|---|---|---|---|---|---|---|
| 70 | 2 | 4 | Indoor | Surface (no door) | 5 | #8–#2 | **BR24L70SP** ①② |
| | 2 | 4 | Indoor | Surface (no door) | 5 | | **BR24L70SGP** ②③ |
| | 2 | 4 | Outdoor | — | 5R | | **BR24L70RP** ①②④ |
| | 2 | 4 | Indoor | Flush (no door) | 5 | | **BR24L70FP** ①② |
| | 2 | 4 | Indoor | Flush (no door) | 5 | | **BR24L70FGP** ②⑤ |
| 125 | 2 | 4 | Indoor | Surface (no door) | 6 | #14–1/0 | **BR24L125SP** ①② |
| | 2 | 4 | Outdoor | — | 6R | | **BR24L125RP** ①②④ |
| | 2 | 4 | Outdoor | — | 6R | | **BR24L125RSEP** ②⑦⑧ |
| | 2 | 4 | Outdoor | — | 6R | | **BR24L125RSE2P** ②⑥⑦ |
| | 2 | 4 | Indoor | Flush (no door) | 6 | | **BR24L125FP** ①② |
| | 4 | 8 | Indoor | Surface (no door) | 7 | #14–1/0 | **BR48L125SP** ①⑨ |
| | 4 | 8 | Indoor | Surface (no door) | 7 | | **BR48L125SGP** ③⑨ |
| | 4 | 8 | Outdoor | — | 7R | | **BR48L125RP** ①④⑨ |
| | 4 | 8 | Indoor | Flush (no door) | 7 | | **BR48L125FP** ①⑨ |
| | 4 | 8 | Indoor | Flush (with door) | 7 | | **BR48L125FDP** ①⑨ |
| | 4 | 8 | Indoor | Flush (no door) | 7 | | **BR48L125FGP** ③⑨ |
| | 6 | 12 | Indoor | Surface (no door) | 7 | #14–#1 | **BR612L125SP** ①⑩ |
| | 6 | 12 | Indoor | Surface (no door) | 7 | | **BR612L125SGP** ⑩⑪ |
| | 6 | 12 | Indoor | Surface (with door) | 7 | | **BR612L125SDP** ①⑩ |
| | 6 | 12 | Indoor | Surface (with door) | 7 | | **BR612L125SDGP** ⑩⑪ |
| | 6 | 12 | Outdoor | — | 7R | | **BR612L125RP** ①④⑩ |
| | 6 | 12 | Indoor | Flush (no door) | 7 | | **BR612L125FP** ①⑩ |
| | 6 | 12 | Indoor | Flush (no door) | 7 | | **BR612L125FGP** ⑤⑩⑪ |
| | 6 | 12 | Indoor | Flush (with door) | 7 | | **BR612L125FDP** ⑩ |
| | 6 | 12 | Indoor | Flush (with door) | 7 | | **BR612L125FDGP** ⑤⑩⑪ |
| | 8 | 16 | Indoor | Surface (no door) | 7 | #14–#1 | **BR816L125SP** ①⑩ |
| | 8 | 16 | Indoor | Surface (no door) | 7 | | **BR816L125SGP** ⑩⑫ |
| | 8 | 16 | Indoor | Surface (with door) | 7 | | **BR816L125SDP** ①⑩ |
| | 8 | 16 | Indoor | Surface (with door) | 7 | | **BR816L125SDGP** ⑩⑫ |
| | 8 | 16 | Outdoor | — | 7R | | **BR816L125RP** ①④⑩ |
| | 8 | 16 | Indoor | Flush (no door) | 7 | | **BR816L125FP** ①⑩ |
| | 8 | 16 | Indoor | Flush (no door) | 7 | | **BR816L125FGP** ⑤⑩⑫ |
| | 8 | 16 | Indoor | Flush (with door) | 7 | | **BR816L125FDP** ①⑩ |
| | 8 | 16 | Indoor | Flush (with door) | 7 | | **BR816L125FDGP** ⑤⑩⑫ |

***Notes***

① Ground bar kits priced separately. See **Page V1-T1-66**.
– For 2/4 circuit loadcenters, use GBK5 or GBK520 ground bar.
– For 4/8, 6/12 and 8/16 circuit loadcenters, use GBK10 ground bar.
– Ground bars mount to the left side wall of the enclosure for the 4/8, 6/12 and 8/16 circuit loadcenters.

② Suitable for use as service equipment when not more than two service disconnecting mains are provided or when not used as a lighting and appliance panelboard (see Article 408.34 of the NEC).

③ Ground bar GBK5 is installed.

④ Rainproof panels are furnished with hub closure plates. For rainproof hubs, refer to **Page V1-T1-66**.

⑤ CSA and UL approved.

⑥ Neutral/ground holes (6) #14–6 and (3) #14–2/0 AWG Cu/Al.

⑦ For use as service entrance applications only.

⑧ Neutral/ground holes (6) #14–6 and (3) #14–1/0 AWG Cu/Al.

⑨ Suitable for use as service equipment when not more than two service disconnecting mains are provided or when not more than six service disconnecting mains are provided and when not used as a lighting and appliance panelboard (see Article 408.34 of the NEC).

⑩ Suitable for use as service equipment when a main breaker is used or when not more than six service disconnecting mains are provided and when not used as a lighting and appliance panelboard (see Article 408.34 of the NEC).

⑪ Ground bar GBK10 is installed.

⑫ Ground bar GBK14 is installed.

Box sizes **Pages V1-T1-67** through **V1-T1-70**.

***Single-Phase—Main Lug Loadcenters***

## Single-Phase Three-Wire—120/240 Vac—Insulated/Bondable Split Neutral, continued

| | Main Ampere Rating | Maximum Number 1-Inch (25.4 mm) Spaces | Circuits | Enclosure Type | Box Size | Wire Size Range Cu/Al 60 °C or 75 °C for Main Lugs | Loadcenter Catalog Number with Combination or NEMA Type 3R Cover ① |
|---|---|---|---|---|---|---|---|
| **BR1224L125** | 125 | 12 | 12 | Indoor | B1 | #6–2/0 | **BR1212L125** ②③④⑤ |
| | | 12 | 24 | Indoor | B1 | | **BR1224L125** ②④⑤ |
| | | 12 | 24 | Indoor | B1 | | **BR1224L125G** ②④⑤ |
| | | 12 | 24 | Indoor | B1 | | **BR1224L125DG** ②④⑤⑥ |
| | | 12 | 24 | Outdoor | B1R | | **BR1224L125R** ②⑤⑦ |
| | | 16 | 16 | Indoor | B2 | | **BR1616L125** ②④⑤ |
| | | 16 | 24 | Indoor | B2 | | **BR1624L125** ②④ |
| | | 16 | 24 | Indoor | B2 | | **BR1624L125G** ②④ |
| | | 16 | 24 | Outdoor | B2R | | **BR1624L125R** ②⑦ |
| | | 20 | 20 | Indoor | C1 | | **BR2020L125** ②④⑤ |
| | | 20 | 24 | Indoor | C1 | | **BR2024L125** ②④ |
| | | 20 | 24 | Indoor | C1 | | **BR2024L125G** ②④⑧ |
| | | 20 | 24 | Outdoor | C1R | | **BR2024L125R** ②⑦ |
| | | 24 | 24 | Indoor | C2 | | **BR2424L125** ②④ |
| | | 24 | 24 | Indoor | C2 | | **BR2424L125G** ②④⑧ |
| | | 30 | 42 | Indoor | D1 | | **BR3042L125** ②④ |
| | 150 | 16 | 30 | Indoor | C2 | #1–300 kcmil | **BR1630L150** ④⑨ |
| | | 20 | 30 | Indoor | C2 | | **BR2030L150** ④⑨ |
| **BR1224L200** | 200 | 8 | 16 | Outdoor | B2R | #1–300 kcmil | **BR816L200RF** ⑤⑦⑩ |
| | | 12 | 24 | Indoor | B2 | | **BR1224L200** ④⑤⑨ |
| | | 12 | 24 | Outdoor | B2R | | **BR1224L200R** ⑤⑦⑨ |
| | | 20 | 40 | Indoor | C2 | | **BR2040L200** ④⑨ |
| | | 20 | 40 | Indoor | C2 | | **BR2040L200G** ④⑧⑨ |
| | | 20 | 40 | Outdoor | C3R | | **BR2040L200R** ⑦⑨ |
| | | 24 | 40 | Indoor | C4 | | **BR2440L200** ④⑨ |
| | | 30 | 40 | Indoor | D1 | | **BR3040L200** ④⑨ |
| | | 30 | 40 | Indoor | D1 | | **BR3040L200G** ④⑧⑨ |
| | | 30 | 40 | Outdoor | D1R | | **BR3040L200R** ⑦⑨ |
| | | 40 | 40 | Indoor | G1 | | **BR4040L200** ④⑨ |
| | | 40 | 40 | Indoor | G1 | | **BR4040L200G** ④⑨ |
| | | 40 | 40 | Outdoor | G1R | | **BR4040L200R** ⑦⑨ |
| | | 60 | 120 | Indoor | L3 | | **BR60120L200** ⑪ |
| | 225 | 42 | 42 | Indoor | L1 | #1–300 kcmil | **BR4242L225** ④ |
| | | 42 | 42 | Outdoor | L1R | | **BR4242L225R** ⑦ |

***Notes***

① Ground bar kits priced separately unless otherwise noted. See **Page V1-T1-66**.
② Has notch for BREQS125 hold-down kit.
③ Single, movable neutral is provided.
④ Combination cover style.
⑤ Suitable for use as service equipment when not more than six main disconnecting means are provided and when not used as a lighting and appliance panelboard (see Article 408.34 of the NEC).
⑥ Ground bars GBK5 and GBK520 installed.
⑦ Rainproof panels are furnished with hub closure plates. For rainproof hubs, refer to **Page V1-T1-66**.
⑧ Ground bar GBK1220 installed.
⑨ Has notch for BRHDK125 hold-down kit.
⑩ Includes through-feed lugs for both phase and neutral conductors.
⑪ Includes main lugs. Loadcenters can convert to main breaker using kit.

1

### *Single-Phase—Main Lug Loadcenters—400 and 600 A*

**4242DFN**

## Single-Phase Three-Wire—120/240 Vac—Insulated/Bondable Split Neutral

| Main Ampere Rating | Maximum Number 1-Inch (25.4 mm) Spaces | Circuits | Enclosure Type | Box Size | Wire Size Range Cu/Al 60 °C or 75 °C for Main Lugs | Commercial Loadcenter Catalog Number ①②③ With Flush or NEMA Type 3R Cover | With Surface Cover |
|---|---|---|---|---|---|---|---|
| 400 | 12 | 24 | Outdoor | 42 | (2) #3/0–400 kcmil | **BR1224L400R** ④⑤ | — |
| | 42 | 42 | Indoor | 22 | | **BR4242L400F** | **BR4242L400S** |
| | 42 | 42 | Outdoor | 46 | | **BR4242L400R** ④ | — |
| 600 | 42 | 42 | Indoor | 22 | (2) #2–500 kcmil | — | **BR4242L600S** |

***Notes***

① Ground bar kits priced separately unless otherwise noted. See **Page V1-T1-66**.

② Has notch for BRHDK125 hold-down kit.

③ Ground bar GBK8 installed.

④ Rainproof panels are furnished with hub closure plates. For rainproof hubs, refer to **Page V1-T1-66**.

⑤ Suitable for use as service equipment when not more than six main disconnecting means are provided and when not used as a lighting and appliance panelboard (see Article 408.34 of the NEC).

***Convertible Loadcenters MCB or MLO—Base Units and Main Devices 10/22/25 kAIC, Complete Assembly Consists of: Loadcenter and Either Main Breaker Kit or Main Lug Kit***

**Note:** Interrupting rating depends on main circuit breaker selected.

**BR3040N200**

## Base Units—Single-Phase Three-Wire—120/240 Vac—Insulated/Bondable Split Neutral (Unless Otherwise Noted)

| Main Ampere Rating ① | Maximum Number 1-Inch (25.4 mm) Spaces | Circuits | Enclosure Type | Box Size | Wire Size Range Cu/Al 60 °C or 75 °C for Main | Loadcenter Catalog Number With Combination or NEMA Type 3R Cover ②③ |
|---|---|---|---|---|---|---|
| 125 ④ | 12 | 24 | Indoor | B2 | See main breaker and main lug kit tables **Page V1-T1-54**. | **BR1224N125** ⑤⑥ |
| | 12 | 24 | Outdoor | B2R | | **BR1224N125R** ⑤⑥⑦ |
| | 16 | 24 | Indoor | C1 | | **BR1624N125** ⑤ |
| | 16 | 24 | Outdoor | C1R | | **BR1624N125R** ⑤⑦ |
| | 20 | 24 | Indoor | C2 | | **BR2024N125** ⑤ |
| | 20 | 24 | Outdoor | C3R | | **BR2024N125R** ⑤⑦ |
| 200 ⑧ | 8 | 16 | Outdoor | C3R | | **BR816N200RF** ⑦⑨⑩⑪ |
| | 12 | 24 | Indoor | C4 | | **BR1224N200** ⑩ |
| | 12 | 24 | Outdoor | C3R | | **BR1224N200R** ⑦⑩ |
| | 16 | 32 | Indoor | C4 | | **BR1632N200** ⑩ |
| | 20 | 40 | Indoor | D1 | | **BR2040N200** ⑩ |
| | 20 | 40 | Indoor | D1 | | **BR2040N200G** ⑫ |
| | 20 | 40 | Outdoor | D1R | | **BR2040N200R** ⑦⑩ |
| | 20 | 40 | Outdoor | D1R | | **BR2040N200RG** ⑫ |
| | 24 | 40 | Indoor | G1 | | **BR2440N200** ⑦⑩ |
| | 30 | 40 | Indoor | G1 | | **BR3040N200** ⑩ |
| | 30 | 40 | Indoor | G1 | | **BR3040N200G** ⑫ |
| | 30 | 40 | Outdoor | G1R | | **BR3040N200R** ⑦⑩ |
| | 30 | 40 | Outdoor | G1R | | **BR3040N200RG** ⑫ |
| | 40 | 40 | Indoor | L1 | | **BR4040N200** ⑩ |
| | 40 | 40 | Indoor | L1 | | **BR4040N200G** ⑫ |
| | 40 | 40 | Outdoor | L1R | | **BR4040N200R** ⑦⑩ |
| | 40 | 40 | Outdoor | L1R | | **BR4040N200RG** ⑫ |
| | 40 | 50 | Indoor | L1 | | **BR4050N200** |
| | 40 | 50 | Outdoor | L1R | | **BR4050N200R** |

***Notes***

① The maximum rating of the loadcenter is the main circuit breaker rating when used as service entrance equipment.
② 100, 125 and 200 A convertible base unit catalog numbers include interior, box and cover only. Main devices and accessories must be ordered separately for field installation. All convertible base units are listed as suitable for use as service entrance equipment when used per Article 384 of the NEC.
③ Ground bar kits priced separately except as noted, refer to **Page V1-T1-66**.
④ For main breaker, use Type BR. For main lug use Type BRSF.
⑤ BREQS125 hold-down screw comes with loadcenter for back-fed Types BR and BRH main circuit breakers.
⑥ Convertible to maximum of 100 A main circuit breaker and 125 A main lug.
⑦ Rainproof loadcenters are furnished with hub closure plates. For rainproof hubs, refer to **Page V1-T1-66**.
⑧ For main breaker, use Type BW or CSR. For main lug, use Type BRL.
⑨ Includes through-feed lugs for both phase and neutral conductors.
⑩ No hold-down provisions for back-fed Types BR and BRH main circuit breakers.
⑪ Insulated/bondable single neutral.
⑫ Includes GBK2120 ground bar.

***Convertible Loadcenters MCB or MLO—Base Units and Main Devices 10/22/25 kAIC, Complete Assembly Consists of: Loadcenter and Either Main Breaker Kit or Main Lug Kit***

**Note:** Interrupting rating depends on main circuit breaker selected.

**BW2200**

### Main Devices—Two- and Three-Pole Main Circuit Breakers—120/240 Vac or 208Y/120 Vac or 240 Vac

| Ampere Rating | Wire Size Range Cu/Al 60 °C or 75 °C for Main Breaker | 10 kAIC Catalog Number | 22/25 kAIC Catalog Number ① |
|---|---|---|---|
| **Two-Pole** | | | |
| 100 | #4–1/0 | **BR2100** | **BRH2100** |
| 110 | #4–1/0 | **BR2110** | **BRH2110** |
| 125 | #4–2/0 | **BR2125** | **BRH2125** |
| 125 | #2–300 kcmil | **BW2125** | **CSR2125N** |
| 150 | #2–300 kcmil | **BW2150** | **CSR2150N** |
| 175 | #2–300 kcmil | **BW2175** | **CSR2175N** |
| 200 | #2–300 kcmil | **BW2200** | **CSR2200N** |
| **Three-Pole** | | | |
| 100 | #1 | **BR3100** | **BRH3100** |

**BRL200**

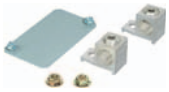

### Main Devices—Two- and Three-Pole Main Lug Kits—120/240 Vac or 208Y/120 Vac or 240 Vac

| Ampere Rating | Wire Size Range Cu/Al 60 °C or 75 °C for Main Lugs | Catalog Number |
|---|---|---|
| **Two-Pole** | | |
| 125 | #6–2/0 | **BRSF125** |
| 150 | #1–300 kcmil | **BRL200** |
| 175 | #1–300 kcmil | **BRL200** |
| 200 | #1–300 kcmil | **BRL200** |
| **Three-Pole** | | |
| 150 | #6–3/0 | **3BRSF150** |

***Main Circuit Breaker with Accessory***

Example: BW22005R01 (Put description with catalog number on order. See **Page V1-T1-87**.)

***Main Circuit Breaker Loadcenters—Copper Bus 10/22/25 kAIC***

**BR3030BC100**

### Main Circuit Breaker Loadcenters—With Copper Bus—Single-Phase Three-Wire—120/240 Vac—Insulated/Bondable Split Neutral

| Main Breaker Type | Main Ampere Rating | Maximum Number 1-Inch (25.4 mm) Spaces | Maximum Number 1-Inch (25.4 mm) Circuits | Enclosure Type | Box Size | Wire Size Range Cu/Al 60 °C or 75 °C for Main Breaker | Loadcenter Catalog Number with Combination Cover ②③ |
|---|---|---|---|---|---|---|---|
| BR 10 kAIC | 100 | 20 | 20 | Indoor | C2 | #4–1/0 | **BR2020BC100** |
| | | 30 | 30 | Indoor | D1 | #4–1/0 | **BR3030BC100** |
| BRH 22 kAIC ④ | 100 | 30 | 30 | Indoor | D1 | #4–1/0 | **BR3030HC100** |
| CSR 25 kAIC | 150 | 30 | 30 | Indoor | G1 | #2–300 kcmil | **BR3030BC150** |
| | 200 | 20 | 40 | Indoor | D1 | #2–300 kcmil | **BR2040BC200** |
| | | 30 | 40 | Indoor | G1 | #2–300 kcmil | **BR3040BC200** |
| | | 40 | 40 | Indoor | L1 | #2–300 kcmil | **BR4040BC200** |

***Main Lug Only Loadcenters—Copper Bus***

**BR816LC125FDP**

### Single-Phase Three-Wire—120/240 Vac—Insulated/Bondable Single Neutral with Copper Bus

| Main Ampere Rating | Maximum Number 1-Inch (25.4 mm) Spaces | Maximum Number 1-Inch (25.4 mm) Circuits | Enclosure Type | Trim Type | Box Size | Wire Size Range Cu/Al 60 °C or 75 °C for Main Lugs | Loadcenter Catalog Number |
|---|---|---|---|---|---|---|---|
| 125 | 8 | 16 | Indoor | Surface (with door) | 7 | #14–1 | **BR816LC125SDP** |
| | 8 | 16 | Indoor | Flush (with door) | 7 | | **BR816LC125FDP** |

***Notes***

① Series combination rating with Types BD, BR, BQ, BQC and GFCB is 22 kAIC with BRH main and 25 kAIC with CSR main.

② All main circuit breaker loadcenters are listed for use as service entrance equipment and are shipped with neutral bonding strap preattached. The maximum rating of the panel is the main circuit breaker rating when used as service entrance equipment.

③ Ground bar kits priced separately. See **Page V1-T1-66**.

④ 22 kAIC series combination rating is obtained when Types BD, BR, BQ, BQC and GFCB 10 kAIC branch breakers are used in series with Type BRH main breaker.

Box sizes **Pages V1-T1-67** through **V1-T1-70**.

### *Convertible Loadcenters—Copper Bus 10/22/25 kAIC*

**BR3040NC200**

## Convertible—Single-Phase, Three-Wire—120/240 Vac—Insulated/Bondable Split Neutral

| Main Ampere Rating | Maximum Number 1-Inch (25.4 mm) Spaces | Circuits | Enclosure Type | Box Size | Wire Size Range Cu/Al 60 °C or 75 °C for Main | Loadcenter Catalog Number (With Combination or NEMA Type 3R Cover) ①②③ |
|---|---|---|---|---|---|---|
| 125 10/22 kAIC ④⑤ | 12 | 24 | Indoor | B2 | See main breaker and main lug kit tables on **Page V1-T1-54**. | **BR1224NC125** ⑥⑦ |
| | 12 | 24 | Outdoor | B2R | | **BR1224NC125R** ⑥⑦⑧ |
| | 20 | 24 | Indoor | C2 | | **BR2024NC125** ⑦ |
| | 20 | 24 | Outdoor | C3R | | **BR2024NC125R** ⑦⑧ |
| 200 10/25 kAIC ④⑨ | 20 | 40 | Indoor | D1 | | **BR2040NC200** |
| | 20 | 40 | Outdoor | D1R | | **BR2040NC200R** ⑧ |
| | 30 | 40 | Indoor | G1 | | **BR3040NC200** |
| | 30 | 40 | Outdoor | G1R | | **BR3040NC200R** ⑧ |
| | 40 | 40 | Indoor | L1 | | **BR4040NC200** |
| | 40 | 40 | Outdoor | L1R | | **BR4040NC200R** ⑧ |

***Notes***

① 100, 125 and 200 A convertible base unit catalog numbers include interior, box and cover only. Main devices and accessories must be ordered separately for field installation. All convertible base units are listed as suitable for use as service entrance equipment when used per Article 384 of the NEC.

② Ground bar kits priced separately, refer to **Page V1-T1-66**.

③ All main circuit breaker loadcenters are listed for use as service entrance equipment and are shipped with a neutral bonding strap preattached. The maximum main rating of the loadcenter is the main breaker rating when used as service entrance equipment.

④ Interrupting rating depends on main circuit breaker selected. See **Page V1-T1-66** for mains.

⑤ For main breaker, use Type BW or CSR. For main lug, use Type BRL.

⑥ Rainproof loadcenters are furnished with hub closure plates. For rainproof hubs, refer to **Page V1-T1-66**.

⑦ Hold-down screw BREQS125 comes with loadcenter for back-fed Types BR and BRH main circuit breakers.

⑧ For main breaker, use Type BR. For main lug, use Type BRSF.

⑨ Suitable for use as service equipment when not more than six main disconnecting means are provided and when not used as a lighting and appliance panelboard. (see Article 408.34 of the NEC).

### *Three-Phase—Type BR Main Circuit Breaker Loadcenters*

#### Three-Phase, Four-Wire—Main Lug Loadcenters—Copper Bus—208Y/120 Vac or 240 Vac, Insulated/Bondable Split Neutral

| Main Ampere Rating | Maximum Number 1-Inch (25.4 mm) Spaces | Circuits | Enclosure Type | Box Size | Wire Size Range Cu/Al 60 °C or 75 °C for Main | Loadcenter Catalog Number (With Combination or NEMA Type 3R Cover) |
|---|---|---|---|---|---|---|
| 125 | 12 | 24 | Indoor | C1 | #6–3/0 | **3BR1224LC125** |
| 125 | 12 | 24 | Outdoor | C1R | #6–3/0 | **3BR1224LC125R** |
| 150 | 24 | 42 | Indoor | D1 | #4–300 kcmil | **3BR2442LC150** |
| 150 | 24 | 42 | Outdoor | D1R | #4–300 kcmil | **3BR2442LC150R** |
| 200 | 12 | 24 | Indoor | C4 | #4–300 kcmil | **3BR1224LC200** |
| 200 | 12 | 24 | Outdoor | C3R | #4–300 kcmil | **3BR1224LC200R** |
| 200 | 30 | 42 | Indoor | G1 | #4–300 kcmil | **3BR3042LC200** |
| 200 | 30 | 42 | Outdoor | G1R | #4–300 kcmil | **3BR3042LC200R** |
| 200 | 42 | 42 | Indoor | L1 | #4–300 kcmil | **3BR4242LC200** |
| 200 | 42 | 42 | Outdoor | L1R | #4–300 kcmil | **3BR4242LC200R** |
| 225 | 30 | 42 | Indoor | L1 | #4–300 kcmil | **3BR3042LC225** |
| 225 | 30 | 42 | Outdoor | L1R | #4–300 kcmil | **3BR3042LC225R** |
| 400 | 42 | 42 | Indoor | 24 | (2) 3/0–250 kcmil | **3BR4242LC400S** |
| | 42 | 42 | Outdoor | 47 | | **3BR4242BC400R** |
| 600 | 42 | 42 | Indoor | 24 | (2) 3/0–500 kcmil | **3BR4242LC600S** |

#### Three-Phase, Four-Wire—Main Circuit Breaker Loadcenters—Copper Bus—208Y/120 Vac or 240 Vac, Insulated/Bondable Split Neutral

| Main Breaker Type | Main Ampere Rating | Maximum Number 1-Inch (25.4 mm) Spaces | Circuits | Enclosure Type | Box Size | Wire Size Range Cu/Al 60 °C or 75 °C for Main Breaker | Loadcenter Catalog Number (With Combination or NEMA Type 3R Cover) |
|---|---|---|---|---|---|---|---|
| BR 10 kAIC | 100 | 12 | 24 | Indoor | C1 | #14–1/0 | **3BR1224BC100** |
| | 100 | 12 | 24 | Outdoor | C1R | #14–1/0 | **3BR1224BC100R** |
| CC 10 kAIC | 150 | 30 | 42 | Indoor | L1 | #6–4/0 | **3BR3042BC150** |
| | 150 | 30 | 42 | Outdoor | L1R | #6–4/0 | **3BR3042BC150R** |
| | 200 | 42 | 42 | Indoor | L2 | 2/0–300 kcmil | **3BR4242BC200** |
| | 200 | 42 | 42 | Outdoor | L2R | 2/0–300 kcmil | **3BR4242BC200R** |
| | 225 | 42 | 42 | Indoor | L2 | 2/0–300 kcmil | **3BR4242BC225** |
| | 225 | 42 | 42 | Outdoor | L2R | 2/0–300 kcmil | **3BR4242BC225R** |
| DK 22 kAIC | 400 | 42 | 42 | Indoor | 24 | (2) 3/0–250 kcmil | **3BR4242BC400S** |
| | | 42 | 42 | Outdoor | 47 | | **3BR4242BC400R** |
| HLD 10 kAIC | 600 | 42 | 42 | Indoor | 24 | (2) 3/0–500 kcmil | **3BR4242BC600S** |

**3BR4242B200**

#### Three-Phase, Four-Wire—Main Circuit Breaker Loadcenters—Aluminum Bus—208Y/120 Vac or 240 Vac Insulated/Bondable Split Neutral

| Main Breaker Type | Main Ampere Rating | Maximum Number 1-Inch (25.4 mm) Spaces | Circuits | Enclosure Type | Box Size | Wire Size Range Cu/Al 60 °C or 75 °C for Main Breaker | Loadcenter Catalog Number ①② (With Combination or NEMA Type 3R Cover) |
|---|---|---|---|---|---|---|---|
| BR 10 kAIC | 100 | 12 | 24 | Indoor | C1 | #14–1/0 | **3BR1224B100** |
| | | 12 | 24 | Outdoor | C1R | | **3BR1224B100R** ③ |
| CC 10 kAIC | 125 | 30 | 42 | Indoor | L1 | #6–4/0 | **3BR3042B125** |
| | 150 | 30 | 42 | Indoor | L1 | #6–4/0 | **3BR3042B150** |
| | | 30 | 42 | Outdoor | L1R | | **3BR3042B150R** ③ |
| | 200 | 30 | 42 | Indoor | L1 | #1–250 kcmil | **3BR3042B200** |
| | | 30 | 42 | Outdoor | L1R | | **3BR3042B200R** ③ |
| | | 42 | 42 | Indoor | L2 | | **3BR4242B200** |
| | | 42 | 42 | Outdoor | L2R | | **3BR4242B200R** ③ |
| CHH 100 kAIC | 200 | 42 | 42 | Indoor | L2 | 2/0–300 kcmil | **3BR4242H200** ⑥ |
| CC 10 kAIC | 225 | 42 | 42 | Indoor | L2 | 2/0–300 kcmil | **3BR4242B225** |
| | | 42 | 42 | Outdoor | L2R | | **3BR4242B225R** ③ |
| DK ④ 22 kAIC | 400 | 42 | 42 | Indoor | 24 | (2) #3/0–250 kcmil | **3BR4242B400S** ⑦ |
| | | 42 | 42 | Indoor | 24 | | **3BR4242B400F** |
| | | 42 | 42 | Outdoor | 47 | | **3BR4242B400R** ③ |
| LD ⑤ | 600 | 42 | 42 | Indoor | 24 | (2) #3/0–500 kcmil | **3BR4242B600F** |

***Notes***

① All main circuit breaker loadcenters are listed for use as service entrance equipment and are shipped with a neutral bonding strap pre-attached (commercial loadcenters do not have a pre-attached bonding strip). The maximum main rating of the panel is the main circuit breaker rating when used as service entrance equipment.

② Ground bar kits priced separately. See **Page V1-T1-66**.

③ Rainproof loadcenters are furnished with hub closure plates. For rainproof hubs, refer to **Page V1-T1-66**.

④ Type DK main circuit breaker is rated 65 kAIC at 240 Vac and allows a 22 kAIC series rating on the loadcenter when Types BR, BD and BJ branch circuit breakers are used.

⑤ The LD main circuit breaker is rated 65 kAIC at 240 Vac. Type LD circuit breaker **is not** series rated with Types BR, BD and BJ branch circuit breakers.

⑥ Includes CHH 100 kAIC rated MCB. 100 kAIC series rating combination is obtained when types BD, BR, BQ, BQC and GFGB branch breakers are used with CHH main.

⑦ With surface cover.

3BR1224L125

## Three-Phase, Four-Wire—Main Lug Loadcenters—Aluminum Bus—208Y/120 Vac or 240 Vac, Insulated/Bondable (Unless Otherwise Noted)

| Main Ampere Rating | Maximum Number 1-Inch (25.4 mm) Spaces | Circuits | Enclosure Type | Box Size | Wire Size Range Cu/Al 60 °C or 75 °C for Main Lugs | Loadcenter Catalog Number ① (With Combination or NEMA Type 3R Cover) |
|---|---|---|---|---|---|---|
| 100 | 3 | 3 | Indoor | 9 | #6–1/0 | **3BR3L100S** ②③ |
| | 3 | 3 | Outdoor | 9R | | **3BR3L100R** ③④ |
| 125 | 12 | 24 | Indoor | C1 | #6–3/0 | **3BR1224L125** ⑤⑥ |
| | 12 | 24 | Outdoor | C1R | | **3BR1224L125R** ④⑤⑥ |
| 150 | 18 | 36 | Indoor | C2 | #6–4/0 | **3BR1836L150** |
| | 18 | 36 | Outdoor | C3R | | **3BR1836L150R** |
| | 24 | 42 | Indoor | D1 | #4–300 kcmil | **3BR2442L150** |
| | 24 | 42 | Outdoor | D1R | | **3BR2442L150R** ④ |
| 200 | 12 | 24 | Indoor | C4 | #4–300 kcmil | **3BR1224L200** ⑥ |
| | 12 | 24 | Outdoor | C3R | | **3BR1224L200R** ④⑥ |
| | 18 | 36 | Indoor | C4 | #4–300 kcmil | **3BR1836L200** |
| | 18 | 36 | Outdoor | C3R | | **3BR1836L200R** |
| | 30 | 42 | Indoor | G1 | #4–300 kcmil | **3BR3042L200** |
| | 30 | 42 | Outdoor | G1R | | **3BR3042L200R** ④ |
| | 42 | 42 | Indoor | L1 | #4–300 kcmil | **3BR4242L200** |
| | 42 | 42 | Outdoor | L1R | | **3BR4242L200R** ④ |
| 225 | 42 | 42 | Indoor | L1 | #4–300 kcmil | **3BR4242L225** |
| | 42 | 42 | Outdoor | L1R | | **3BR4242L225R** ④ |

3BR4242L400F

## Three-Phase, Four-Wire—Main Lug Loadcenters—Aluminum Bus—208Y/120 Vac or 240 Vac, Insulated/Bondable Split Neutral

| Main Ampere Rating | Maximum Number 1-Inch (25.4 mm) Spaces | Circuits | Enclosure Type | Box Size | Wire Size Range Cu/Al 60 °C or 75 °C for Main Lugs | Commercial Loadcenter Catalog Number ⑦ With Flush or NEMA Type 3R Cover | With Surface Cover |
|---|---|---|---|---|---|---|---|
| 400 | 42 | 42 | Indoor | 22 | (1) 250–750 kcmil or (2) #3/0–250 kcmil | **3BR4242L400F** | **3BR4242L400S** |
| | 42 | 42 | Outdoor | 46 | | **3BR4242L400R** ④ | — |
| 600 | 42 | 42 | Indoor | 22 | (2) #2–500 kcmil | — | **3BR4242L600S** |

***Notes***

① Ground bar kits priced separately. See **Page V1-T1-66**.
② Surface cover only.
③ Insulated/bondable single neutral.
④ Rainproof loadcenters are furnished with hub closure plates. For rainproof hubs, refer to **Page V1-T1-66**.
⑤ Has notch for BREQS125 hold-down kit.
⑥ Suitable for use as service equipment when not more than six main disconnecting means are provided and when not used as a lighting and appliance panelboard (see Article 408.34 of the NEC).
⑦ Door lock and key included with loadcenter.

Box sizes **Pages V1-T1-67** through **V1-T1-70**.

3BR3030N100

3BR4242N225NY

## Three-Phase, Four-Wire—Convertible Loadcenters—Aluminum Bus—208Y/120 Vac or 240 Vac, Insulated/Bondable Split Neutral

| Main Ampere Rating ① | Maximum Number 1-Inch (25.4 mm) Spaces | Circuits | Enclosure Type | Box Size | Wire Size Range Cu/Al 60 °C or 75 °C for Main | Loadcenter Catalog Number ②③ (With Combination or NEMA Type 3R Cover) |
|---|---|---|---|---|---|---|
| 100 ④ | 30 | 30 | Indoor | D1 | See main breaker and main lug kit tables below. | **3BR3030N100** ⑤ |
| | 30 | 30 | Outdoor | D1R | | **3BR3030N100R** ⑤⑥ |
| 125 ④ | 12 | 24 | Indoor | C1 | | **3BR1224N125** ⑤⑥⑦ |
| | 12 | 24 | Outdoor | C1R | | **3BR1224N125R** ⑤⑥⑦⑧ |
| 200 | 30 | 42 | Indoor | L1 | | **3BR3042N200** |
| 225 | 42 | 42 | Indoor | L2 | | **3BR4242N225** |
| | 42 | 42 | Indoor | B | | **3BR4242B225NY** ⑨ |

## Three-Phase Main Breaker Kits—10 kAIC

| Ampere Rating | Wire Size Range Cu/Al 60 °C or 75 °C | Catalog Number |
|---|---|---|
| 100 | #6–4/0 | **CC3100N** |
| 125 | #6–4/0 | **CC3125N** |
| 150 | #6–4/0 | **CC3150N** |
| 175 | #2/0–300 kcmil | **CC3175N** |
| 200 | #2/0–300 kcmil | **CC3200N** |
| 225 | #2/0–300 kcmil | **CC3225N** |

## Three-Phase Main Lugs Kit for Convertible Loadcenters

| Ampere Rating | Wire Size Range Cu/Al 60 °C or 75 °C | Catalog Number |
|---|---|---|
| 225 | #1–300 kcmil | **3BRL225** |
| 225 | #1–300 kcmil | **3BRS225** ⑩ |

***Notes***

① The maximum rating of the loadcenter is the main circuit breaker rating when used as service entrance equipment.

② 100, 125 and 200 A convertible base unit catalog numbers include interior, box and cover only. Main devices and accessories must be ordered separately for field installation.
All convertible base units are listed as suitable for use as service entrance equipment when used per Article 384 of the NEC.

③ Ground bar kits priced separately. See **Page V1-T1-66**.

④ For main breaker, use Type BR. For main lug, use Type BRSF.

⑤ BREQS125 hold-down screw comes with loadcenter for back-fed Types BR and BRH main circuit breakers.

⑥ Rainproof loadcenters are furnished with hub closure plates. For rainproof hubs, refer to **Page V1-T1-66**.

⑦ Convertible to maximum of 100 A main circuit breaker and 125 A main lug.

⑧ Suitable for use as service equipment when not more than six main disconnecting means are provided and when not used as a lighting and appliance panelboard
(see Article 408.34 of the NEC).

⑨ Order 3BR42FTNY or 3BR42STNY cover separately.

⑩ For subfeed.

Box sizes **Pages V1-T1-67** through **V1-T1-70**.

BR Quick Connect Neutral Loadcenters

## Contents—BR Specialty Products


| *Description* | *Page* |
|---|---|
| Overview | V1-T1-42 |
| BR Specialty Products | |
| BR Quick Connect Neutral Loadcenters | |
| Spa Panels | V1-T1-58 |
| Riser Panel | V1-T1-59 |
| Type BR Renovation Loadcenter | V1-T1-60 |
| Type BR Mechanical Interlock Kits | V1-T1-62 |
| Type BR Retrofit Interior Kits | V1-T1-73 |
| BR Circuit Breakers | V1-T1-76 |


## BR Specialty Products

## BR Quick Connect Neutral Loadcenters

### Product Description

The Type BR Quick Connect Neutral loadcenters coupled with Type BR Quick Connect Neutral electronic breakers provide a clean, quick connection for an installer looking to save time while providing a professional look.

### Features and Benefits

- Full-length neutral bars provide over 300% neutral capacity while enhancing installation flexibility for the installer
- Backed-out neutral screws allow an installer to make a quick connection when terminating neutral and ground wires
- Extended circuits (30/60, 40/80) provide maximum flexibility to a contractor on every space possible
- Standard LED diagnostics on AFCI and AF/GF breakers provides installers best-in-class troubleshooting technology
- Cut-to-length neutral wires provides a clean, professional look versus traditional pigtail circuit breakers
- Solid-tip, stranded neutral wires provide a quick connection to the full length neutral bar

## Product Selection

### BR Quick Connect Neutral Loadcenters ①

| Main Device | Ampere Rating | Spaces | Circuits ② | Incoming Lug Size | Enclosure Type ③ | Box Size | Ground Bar | Number of Neutral Terminations | Catalog Number |
|---|---|---|---|---|---|---|---|---|---|
| BR 10 kAIC | 100 | 30 | 60 | #4–1/0 | Indoor | D1 | ④ | 96 | **BR3060BQN100** |
| CSR 25 kAIC | 150 | 30 | 60 | #2–300 kcmil | Indoor | G1 | ④ | 102 | **BR3060BQN150** |
| CSR 25 kAIC | 200 | 30 | 60 | #2–300 kcmil | Indoor | G1 | ④ | 102 | **BR3060BQN200** |
| CSR 25 kAIC | 200 | 40 | 80 | #2–300 kcmil | Indoor | L1 | ④ | 128 | **BR4080BQN200** |
| CSR 25 kAIC | 200 | 30 | 60 | #2–300 kcmil | Outdoor | L1R | ④ | 94 | **BR3060BQN200R** |
| CSR 25 kAIC | 200 | 40 | 80 | #2–300 kcmil | Outdoor | G1R | ④ | 128 | **BR4080BQN200R** |
| Main lug only | 125 | 24 | 48 | #6–2/0 | Indoor | C2 | GBK14 | 80 | **BR2448LQN125G** |
| Main lug only | 125 | 30 | 60 | #6–2/0 | Indoor | D1 | GBK10 | 96 | **BR3060LQN125G** |
| Main lug only | 200 | 30 | 60 | #1–300 kcmil | Indoor | D1 | GBK1020 + GBK10 | 96 | **BR3060LQN200G** |
| Main lug only | 200 | 40 | 80 | #1–300 kcmil | Indoor | G1 | GBK1020 + GBK10 | 122 | **BR4080LQN200G** |
| Main lug only | 125 | 20 | 40 | #6–2/0 | Outdoor | C1R | GBK14 | 68 | **BR2040LQN125RG** |
| Main lug only | 200 | 30 | 60 | #1–300 kcmil | Outdoor | D1R | GBK1420 | 94 | **BR3060LQN200RG** |
| Convertible | 200 | 30 | 60 | — | Indoor | G1 | ④ | 102 | **BR3060NQN200** |
| Convertible | 200 | 40 | 80 | — | Indoor | L1 | ④ | 128 | **BR4080NQN200** |
| Convertible | 200 | 30 | 60 | — | Outdoor | G1R | ④ | 94 | **BR3060NQN200R** |
| Convertible | 200 | 40 | 80 | — | Outdoor | L1R | ④ | 128 | **BR4080NQN200R** |

### BR Quick Connect Neutral Electronic Breakers

| Ampere Rating | Poles | Wire Size | Breaker Type | LED Diagnostics Included | Catalog Number |
|---|---|---|---|---|---|
| 15 | Single-pole 10 kAIC | #14–4 | Combination AFCI | Yes | **BRCAF115QN** |
| 20 | Single-pole 10 kAIC | #14–4 | Combination AFCI | Yes | **BRCAF120QN** |
| 15 | Single-pole 10 kAIC | #14–4 | Arc fault/ground fault | Yes | **BRLAFGF115QN** |
| 20 | Single-pole 10 kAIC | #14–4 | Arc fault/ground fault | Yes | **BRLAFGF120QN** |

***Notes***

① BR Quick Connect Neutral loadcenters accept both standard and Quick Connect Neutral breakers.
② Loadcenters accept Type BR twin breakers.
③ Combination cover included with every indoor loadcenter.
④ Ground bar kit not included. Purchase separately.

Spa Panels

## Contents—BR Specialty Products


| *Description* | *Page* |
|---|---|
| Overview | **V1-T1-42** |
| BR Specialty Products | |
| BR Quick Connect Neutral Loadcenters | **V1-T1-57** |
| Spa Panels | |
| Riser Panel | **V1-T1-59** |
| Type BR Renovation Loadcenter | **V1-T1-60** |
| Type BR Mechanical Interlock Kits | **V1-T1-62** |
| Type BR Retrofit Interior Kits | **V1-T1-73** |
| BR Circuit Breakers | **V1-T1-76** |


## Spa Panels

### Product Description

Eaton's BR Spa Panels distribute power to outdoor loads and provide protection for people from electric shock. Save time and money with streamlined installation procedures and easy-access features. Spa panels meet NEC requirements by providing a ground fault circuit interruption device and a disconnect switch in a single simple device. Ships assembled prewired, factory tested and ready to install.

### Features

- 10-year warranty
- UL Listed
- Factory-installed two-pole ground fault circuit interrupter (GFCI)

### Product Selection

BR Spa Panel

**Spa Panel—Meets NEC Article 680.40 Through 680.43—Requirements for GFCI Protection**

| Main Ampere Rating | Maximum Number 1-Inch (25.4 mm) Space | Poles | Enclosure Type | Box Size | Wire Size Range Cu/Al 60 °C or 75 °C for Main Lugs | Catalog Number |
|---|---|---|---|---|---|---|
| 40 | — | — | Outdoor | 5R | #8–#2 | **BR40SPA** ① |
| 50 | — | — | Outdoor | 5R | #8–#2 | **BR50SPA** ② |

***Notes***

① Includes a GFCB240 breaker, factory installed.

② Includes a GFCB250 breaker, factory installed.

Riser Panel

## Contents—BR Specialty Products


| *Description* | *Page* |
|---|---|
| Overview | V1-T1-42 |
| BR Specialty Products | |
| BR Quick Connect Neutral Loadcenters | V1-T1-57 |
| Spa Panels | V1-T1-58 |
| Riser Panel | |
| Type BR Renovation Loadcenter | V1-T1-60 |
| Type BR Retrofit Interior Kits | V1-T1-73 |
| BR Circuit Breakers | V1-T1-76 |


# Riser Panel

## Product Description

Eaton's Riser Panel is a loadcenter with an offset interior to allow riser cables to pass through the enlarged gutter. By using lay-in tap lugs, the contractor is able to simply strip off a length of the riser cable's insulation, and tap off to the riser panel's main lugs. These panels are used in the construction of assisted living homes, dormitories, public housing complexes and apartments.

## Product Selection

BR1224L125RIS

### Riser Panel

| Main Ampere Rating | Maximum Number 1-Inch (25.4 mm) Space | Circuits | Enclosure Type | Box Size | Wire Size Range Cu/Al 60 °C or 75 °C for Main Lugs | Catalog Number |
|---|---|---|---|---|---|---|
| 125 | 12 | 24 | Indoor | C4 | #6–2/0 | **BR1224L125RIS** |
| 125 | 12 | 24 | Indoor | C4 | #6–2/0 | **BR1224L125RISBP** ① |
| 125 | 20 | 24 | Indoor | C4 | #6–2/0 | **BR2024L125RIS** |
| 125 | 20 | 24 | Indoor | C4 | #6–2/0 | **BR2024L125RISBP** ① |
| 125 | 20 | 30 | Indoor | C2 | #6–2/0 | **BR2030L125RIS** |
| 200 | 30 | 40 | Indoor | D1 | #1–300 | **BR3040L200RIS** |

BRGUTTER (Shown with Loadcenter)

### Riser Panel Accessories

| Catalog Number |
|---|
| **BRGUTTER** ② |
| **GTAP250** |

***Notes***

① Bulk-packaged loadcenter without carton. Must be ordered in multiples of 16.

② Refer to **Page V1-T1-68** for dimensions. BRGUTTER is box size C2.

## Accessories

For riser panels not shown, contact the Flex Center at 1-800-330-6479 for both CH and BR riser panels.

**BR Renovation Loadcenters**

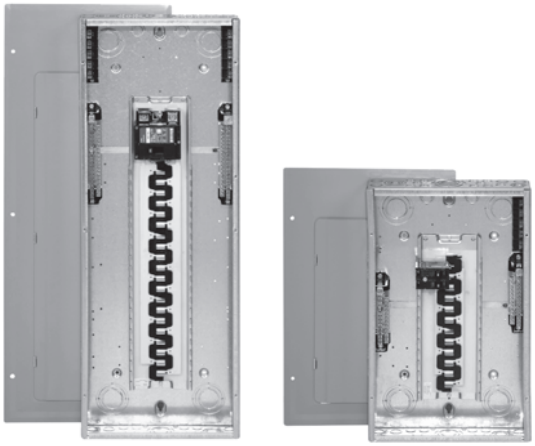

## Contents—BR Specialty Products


| *Description* | *Page* |
|---|---|
| Overview | **V1-T1-42** |
| BR Specialty Products | |
| BR Quick Connect Neutral Loadcenters | **V1-T1-57** |
| Spa Panels | **V1-T1-58** |
| Riser Panel | **V1-T1-59** |
| Type BR Renovation Loadcenter Options and Accessories | **V1-T1-61** |
| Type BR Retrofit Interior Kits | **V1-T1-73** |
| BR Circuit Breakers | **V1-T1-76** |


## Type BR Renovation Loadcenter

### Product Description

- Available in 10, 20, 30 and 40 circuit main breaker styles
- Designed to replace existing loadcenters and fuse boxes
- Type BR loadcenter packaged with circuit breakers
- Factory-installed 5-circuit terminal block(s)
- Twin-stacked neutral design

***Quick-Pro℠***

All you need to know to save time and make more money. Specified on certain Eaton products, the Quick-Pro symbol allows for immediate recognition of products that are designed for straightforward installation. When you see Quick-Pro, you know you can install quickly—sometimes up to 50% less than the usual installation time—and move on to your next job.

### Features, Benefits and Functions

- Factory-installed terminal block(s) allows installer to terminate existing short wires without using wire nuts or junction boxes
- Twin-stacked neutrals are mounted up high in the loadcenter, which allows for all neutral and ground wires to be terminated in the top half of the loadcenter
- Specifically designed for the service contractor—this is the ONLY renovation line in the industry
- Single-pole and two-pole breakers included
- 10-year warranty on loadcenter and breakers

### Product Selection

**BR2020B100RN**

**BR Value Packs** ①

| Main Breaker Type | Description | Wire Size Range | Number of 5-Circuit Terminal Blocks | Single-Pole Breakers | Two-Pole Breakers | Catalog Number |
|---|---|---|---|---|---|---|
| BR 10 kAIC | Single-phase 100 A 10k main breaker 10/20 circuit surface-mount box is 11.75" wide x 13" tall | #6–1/0 | 0 | (2) BR115 | (1) BR230 | **BR1020B100SRNV** |
| | Single-phase 100 A 10k main breaker 10/20 circuit flush-mount box is 11.75" wide x 13" tall | | 0 | (2) BR115 | (1) BR230 | **BR1020B100FRNV** |

***Note***

① Indoor enclosure type.

## Options and Accessories

BRSF125

3BRS225

BRL200

TDL

### Field Installation Kits and Parts

| Number of Poles | Ampere Rating | Number of 1-Inch (25.4 mm) Spaces Needed | Wire Size Range Cu/Al 60 °C or 75 °C | Ordering Quantity ① | Catalog Number |
|---|---|---|---|---|---|
| **Main and Sub-Feed Lug Blocks** | | | | | |
| 2 | 125 | 2 | #8–2/0 | 1 | **BRSF125** |
| | 150 | 2 | #8–2/0 | 1 | **BRSF150** ② |
| | 225 | 4 | #2–300 kcmil | 1 | **BRS225** |
| 3 | 150 | 3 | #8–2/0 | 1 | **3BRSF150** ② |
| | 225 | 6 | #2–300 kcmil | 1 | **3BRS225** |
| **Main Lugs** | | | | | |
| Two-pole, 200 A stud mounted (includes deadfront filler plate) | | | #1–300 kcmil | 1 | **BRL200** |
| Neutral/ground lug<br>Add-on neutral or ground lug | | | #2/0 maximum | 1 | **NL20** |
| | | | #3/0 maximum | 1 | **NL30** |
| | | | 300 kcmil maximum | 1 | **NL300** |
| **Filler Plates** | | | | | |
| 1-inch (25.4 mm) circuit breaker space | | | | 25 | **BRFP** |
| BW main circuit breaker space (with hardware) | | | | 1 | **BWFP** |
| Door lock —12–42 circuits, and 100–225 A | | | | 1 | **TDL** |
| Door lock—4–8 circuits, 125 A | | | | 1 | **CH9FL** |
| ANSI-61 light gray touchup paint for current loadcenters | | | | 1 | **SPC61** |
| Isolated neutral assembly (computer circuits) | | | | 1 | **BINA** |
| Circuit directory—adhesive backed | | | | 10 | **TCD** |
| Cover screws | | | | 25 | **LCCS** |
| Cover replacement latch (gray) 14-5/16 (363.5 mm) wide loadcenters only | | | | 1 | **BRRL** |
| Circuit marking strip (next to breaker) | | | | 10 | **BRMS** |
| Circuit identification label (preprinted breaker labels) | | | | 25 | **CHBL** |
| Series rated caution label | | | | 25 | **SRL** |
| Bonding strip with screw | | | | 1 | **BSSUSE** |

***Notes***

① Must be purchased in multiples of ordering quantities indicated.
② #8–2/0 wire size range is 75 °C rated only.

*Type BR Loadcenter with Mechanical Interlock Kit*

## Contents


| *Description* | *Page* |
|---|---|
| Overview | **V1-T1-42** |
| BR Specialty Products | |
| BR Quick Connect Neutral Loadcenters | **V1-T1-57** |
| Spa Panels | **V1-T1-58** |
| Riser Panel | **V1-T1-59** |
| Type BR Renovation Loadcenter | **V1-T1-60** |
| Type BR Retrofit Interior Kits | **V1-T1-73** |
| Type BR Mechanical Interlock Kits | |
| BR Circuit Breakers | |
| Product Selection | **V1-T1-77** |
| Circuit Breaker Accessories | **V1-T1-85** |
| Wiring Diagrams | **V1-T1-87** |


## Type BR Mechanical Interlock Kits

### Product Description

With the aging electrical infrastructure and frequent severe storms, power outages are becoming more and more frequent, affecting thousands of people nationwide. Eaton mechanical interlock kit provides an easy and cost-effective solution when using backup emergency power.

This solution expands the robust line of emergency power products and accessories.

### Features and Benefits

- Prevents utility and generator supplies from being on at the same time
- Protects utility linemen from dangerous generator backfeed
- Robust interlock design
- Offered in two unique styles for almost any BR loadcenter, which can reduce inventory levels
- Quick and easy installation—drill points or fixtures for pilot holes are provided on all applicable BR loadcenters; no additional assembly is required

### Standards and Certifications

- UL 67 Listed—For use with BR loadcenters
- Meets NEC® Article 702

## Product Selection

Each mechanical interlock kit includes:

- Interlock assembly
- Hold down kit ①
- New labels
- Necessary screws

Warranty information:

- 10-year warranty on all Type BR circuit breakers and loadcenters
- Refer to Eaton for complete warranty details

### Mechanical Interlock Kits ②

| | Description | Catalog Number |
|---|---|---|
| **BRMIKBR** | Single | **BRMIKBR** |
| | Bulk pack ③ | **BRMIKBRBP** |
| **BRMIKCSR** | Single | **BRMIKCSR** |
| | Bulk pack ③ | **BRMIKCSRBP** |

***Notes***

① For breakers under 70 A used in backfed applications, add "B" to the end of the catalog string to get the appropriate "hold-down" version.
② Clamshell packaged.
③ Bulk pack contains 10 units, individually packaged.

1

***Mechanical Interlock Cover***

Covers mechanically interlock two breakers—Type BW or CSR main breaker with a Type BR branch breaker.

**BR816B100**

## Mechanical Interlock Cover

| Fits Loadcenter Catalog Numbers | Mechanical Interlock Trim/Deadfront Catalog Numbers | Mechanical Interlock Kit Catalog Numbers |
|---|---|---|
| **Indoor** | | |
| BR816B100 | BRCOVC10M | BRMIKBR |
| BR816N100 | | |
| BR1212B100 | BRCOVC12M | |
| BR1220B100 | | |
| BR1220H100 | | |
| BR1224N125 | BRCOVC13M | |
| BR1616B100 | BRCOVC16M | |
| BR1620B100 | | |
| BR1624B100 | | |
| BR1624B125 | BRCOVC17M | |
| BR1624N125 | | |
| BR2020B100, BR2020BC100<br>BR2020H100, BR2020HC100 | BRCOVC22M | |
| BR2024H100 | | |
| BR2020HC100 | | |
| BR2030B100 | | |
| BR2040B100 | | |
| BR2024B125 | BRCOVC23M | |
| BR2024N125, BR2024NC125 | | |
| BR3030B100, BR3030BC100 | BRCOVC59M | |
| BR3030H100, BR3030HC100 | | |
| **Raintight** | | |
| BR1020B100R | BR3RDF1M | Field-installed interlock kits not available for these catalog numbers. |
| BR1224B100R | | |
| BR1224N125R, BR1224NC125R | | |
| BR1624B100R | BR3RDF2M | |
| BR1624N125R | | |
| BR2024B100R, BR2024B125R | BR3RDF4M | |
| BR2024N125R, BR2024NC125R | | |

BR4040B200

## Mechanical Interlock Cover, continued

| Fits Loadcenter Catalog Numbers | Mechanical Interlock Trim/Deadfront Catalog Numbers | Mechanical Interlock Kit Catalog Numbers |
|---|---|---|
| **Indoor** | | |
| BR1630B150 | BRCOV16C4FM | BRMIKCSR |
| BR1224N200 | | |
| BR1632B200 | | |
| BR1632N200 | | |
| BR2030B150 | BRCOV20C4FM | |
| BR2030H150 | | |
| BR2040B150 | | |
| BR2040B200, BR2040BC200 | BRCOV20D1FM | |
| BR2040H200 | | |
| BR2040N200, BR2040NC200 | | |
| BR2430B150, BR2430BC150 | BRCOV30G1FM | |
| BR3030B150 | | |
| BR3030H150 | | |
| BR3040B150 | | |
| BR2440B200 | | |
| BR2440N200 | | |
| BR3040B200, BR3040BC200 | | |
| BR3040N200, BR3040NC200 | | |
| BR3040H200 | | |
| BR4040B200, BR4040BC200 | BRCOV40L1FM | |
| BR4040H200 | | |
| BR4040N200, BR4040NC200 | | |
| BR4242B225 | BRCOV42L2FM | |
| **Raintight** | | |
| BR816B150RF | BR3RDF5M ① | |
| BR816B200RF | | |
| BR816N200RF | | |
| BR1224N200R | | |
| BR2030B150R | BR3RDF11M ① | |
| BR2040B150R | | |
| BR2040B200R | | |
| BR2040B225R | | |
| BR2040N200R | | |
| BR3030B150R | BR3RDF12M ① | |
| BR3040B200R | | |
| BR3040N200R | | |
| BR4040B200R | BR3RDF13M ① | |
| BR4040N200R | | |
| BR48B200RF | BR3RDF14M | |
| BR4242B225R | BR3RDF15M ① | |
| **Mechanical Interlock Loadcenter Replacement Covers ②** | | |
| BR2020B100M, BR2020BC100M | BRCOV20C2FM | Field-installed interlock kits not available for these catalog numbers. |
| BR2024H100M | | |
| BR3030BC100M | BRCOV30D1FM | |

***Notes***

① Deadfront only.

② Can only be provided as replacement covers for factory-installed mechanically interlock loadcenters.

DS300H2

## Field Installation Rainproof Conduit Hubs

| Description | Conduit Size Inches (mm) | Ordering Quantity ① | Catalog Number |
|---|---|---|---|
| Group 1—for use with 70, 100 and 125 A MLO and MCB loadcenters and circuit breaker enclosures and the following 150 and 200 A panels: BR48B200RF | 0.75 (19.1) | 1 | **DS075H1** |
| | 1.00 (25.4) | 1 | **DS100H1** |
| | 1.25 (31.8) | 1 | **DS125H1** |
| | 1.50 (38.1) | 1 | **DS150H1** |
| | 2.00 (50.8) | 1 | **DS200H1** |
| Group 2—for use with 150, 200 and 225 A MLO and MCB loadcenters and circuit breaker enclosures except for the following 200 A loadcenters: BR48B200RF. Also for use with 400 and 600 A loadcenters and New York City loadcenters manufactured after November 1, 2005 | 2.00 (50.8) | 1 | **DS200H2** |
| | 2.50 (63.5) | 1 | **DS250H2** |
| | 3.00 (76.2) | 1 | **DS300H2** |
| Type H conduit hubs for loadcenters PL0724R and S3100RN | 0.75 (19.1) | 1 | **RH75P** |
| | 1.00 (25.4) | 1 | **RH100P** |
| | 1.25 (31.8) | 1 | **RH125P** |
| | 1.50 (38.1) | 1 | **RH150P** |
| Adapter kit—Allows Installing a Group 1 hub on devices arranged for Group 2 hubs | — | 1 | **DS900AP** |
| Group 1 small blank hub plate with bump | — | 1 | **DS900CP1** |
| Group 2 Large blank hub plate with bump | — | 1 | **DS900CP2** |

GBK14

BRGBK39512

## Ground Bar Kits

| Description (See Legend) | Length Inches (mm) | Ordering Quantity ① | Catalog Number |
|---|---|---|---|
| ●○○○○●○ | 2.54 (64.5) | 1 | **GBK5** ② |
| ●○○○○●○■ | 3.59 (91.2) | 1 | **GBK520** ② |
| ●○○○○●○○○○○○ | 4.29 (109.0) | 1 | **GBK10** ② |
| ●○○○○●○○○○○○■ | 5.34 (135.6) | 1 | **GBK1020** ② |
| ◒●◒◒◒⬓◒●◒⬓◒◒◒ | 4.61 (117.1) | 1 | **GBK13** ② |
| ●○○○○●○○○○○○○○○○ | 5.69 (144.5) | 1 | **GBK14** ② |
| ●○○○○●○○○○○○○○○○■ | 6.74 (171.2) | 1 | **GBK1420** ② |
| ●○○○○●○○○○○○○○○○○○○○○○ | 8.14 (206.8) | 1 | **GBK21** ② |
| ●○○○○●○○○○○○○○○○○○○○○○○■ | 9.19 (233.4) | 1 | **GBK2120** ② |
| ◒⬓◒●◒⬓◒◒◒⬓◒●◒⬓◒◒◒⬓◒ | 5.78 (146.8) | 1 | **BRGBK39512** ③④ |
| ○○○○○ | 1.84 (46.7) | 1 | **GB4NM** ⑤ |

**Ground Bar Legend**

- ○ (3) #14–10 Cu/Al or (1) #14–4 Cu/Al
- ■ (1) #6–2/0 Cu/Al
- ⬓ (1) #14–1/0 Cu/Al or (3) #14–10 Cu/Al
- ◒ (1) #14–6 Cu/Al or (2) #14–12 Cu/Al
- ● Mounting Hole

***Notes***

① Must be purchased in multiples of ordering quantities indicated.
② Distance between mounting holes is 1.75 inches (44.5 mm).
③ For single- and three-phase 400 and 600 A applications.
④ Distance between mounting holes is 2.34 inches (59.5 mm).
⑤ For non-metallic enclosures. Snaps into molded base.

## Dimensions

Approximate Dimensions in Inches (mm)

***Residential/Commercial/New York City Loadcenters, Unit Enclosures—Box Sizes***

**Note:** Box sizes do not include covers/fronts.

### Residential Loadcenters—NEMA Type 1 Indoor

| Box Size | Height | Width | Depth |
|---|---|---|---|
| A1 | 15.00 (381.0) | 11.25 (285.8) | 3.75 (95.3) |
| B1 | 16.75 (425.5) | 14.31 (363.5) | 3.88 (98.4) |
| B2 | 18.75 (476.3) | 14.31 (363.5) | 3.88 (98.4) |
| C1 | 21.00 (533.4) | 14.31 (363.5) | 3.88 (98.4) |
| C2 | 23.00 (584.2) | 14.31 (363.5) | 3.88 (98.4) |
| C4 | 27.00 (685.8) | 14.31 (363.5) | 3.88 (98.4) |
| D1 | 29.13 (739.8) | 14.31 (363.5) | 3.88 (98.4) |
| G1 | 34.13 (866.8) | 14.31 (363.5) | 3.88 (98.4) |
| L1 | 39.00 (990.6) | 14.31 (363.5) | 3.88 (98.4) |
| L2 | 45.00 (1143.0) | 14.31 (363.5) | 3.88 (98.4) |
| L3 | 48.38 (1228.3) | 14.31 (363.5) | 3.88 (98.4) |
| 2 | 8.63 (219.1) | 5.00 (127.0) | 3.50 (88.9) |
| 3 | 9.44 (239.7) | 4.50 (114.3) | 3.00 (76.2) |
| 4 | 13.00 (330.2) | 11.00 (279.4) | 3.56 (90.5) |
| 5 | 9.44 (239.7) | 4.50 (114.3) | 3.00 (76.2) |
| 6 | 12.00 (304.8) | 6.88 (174.6) | 4.50 (114.3) |
| 7 | 13.00 (330.2) | 11.00 (279.4) | 3.56 (90.5) |
| 9 | 14.50 (368.3) | 6.50 (165.1) | 3.50 (88.9) |

### Residential Loadcenters—NEMA Type 3R Outdoor

| Box Size | Height | Width | Depth |
|---|---|---|---|
| B1R | 16.75 (425.5) | 14.31 (363.5) | 5.19 (131.8) |
| B2R | 18.75 (476.3) | 14.31 (363.5) | 5.19 (131.8) |
| C3R | 25.00 (635.0) | 14.31 (363.5) | 5.19 (131.8) |
| D1R | 29.13 (739.8) | 14.31 (363.5) | 5.19 (131.8) |
| G1R | 34.13 (866.8) | 14.31 (363.5) | 5.19 (131.8) |
| L1R | 39.00 (990.6) | 14.31 (363.5) | 5.19 (131.8) |
| L2R | 45.00 (1143.0) | 14.31 (363.5) | 5.19 (131.8) |
| L3R | 48.75 (1238.2) | 14.31 (363.5) | 5.19 (131.8) |
| 2R | 8.63 (219.1) | 5.00 (127.0) | 3.50 (88.9) |
| 3R | 9.44 (239.7) | 4.50 (114.3) | 3.00 (76.2) |
| 4R | 13.00 (330.2) | 11.00 (279.4) | 3.56 (90.5) |
| 5R | 9.44 (239.7) | 4.50 (114.3) | 3.00 (76.2) |
| 6R | 11.75 (298.5) | 6.50 (165.1) | 4.50 (114.3) |
| 7R | 13.00 (330.2) | 11.00 (279.4) | 3.56 (90.5) |
| 8R | 27.00 (685.8) | 10.50 (266.7) | 4.75 (120.7) |
| 9R | 14.25 (362.0) | 6.50 (165.1) | 4.00 (101.6) |
| C1R | 21.00 (533.4) | 14.31 (363.5) | 5.19 (131.8) |

### Commercial Loadcenters—NEMA Type 1 Indoor

| Box Size | Height | Width | Depth |
|---|---|---|---|
| 19 | 44.00 (1117.6) | 16.16 (410.4) | 6.25 (158.8) |
| 20 | 44.00 (1117.6) | 16.16 (410.4) | 6.25 (158.8) |
| 22 | 54.00 (1371.6) | 16.22 (412.0) | 6.31 (160.3) |
| 24 | 66.50 (1689.1) | 16.22 (412.0) | 6.31 (160.3) |

### Commercial Loadcenters—NEMA Type 3R Outdoor

| Box Size | Height | Width | Depth |
|---|---|---|---|
| 42 | 38.00 (965.2) | 16.31 (414.3) | 6.38 (161.9) |
| 43 | 44.00 (1117.6) | 16.31 (414.3) | 6.38 (161.9) |
| 46 | 54.00 (1371.6) | 16.31 (414.3) | 6.38 (161.9) |
| 47 | 66.56 (1690.7) | 16.31 (414.3) | 6.38 (161.9) |

### New York City Loadcenters—NEMA Type 1 Indoor

| Box Size | Height | Width | Depth |
|---|---|---|---|
| A | 38.00 (965.2) | 18.13 (460.4) | 5.00 (127.0) |
| B | 44.00 (1117.6) | 18.13 (460.4) | 5.00 (127.0) |
| C | 66.50 (1689.1) | 18.13 (460.4) | 6.25 (158.8) |

### ECC Unit Enclosures—NEMA Type 1 Indoor

| Height | Width | Depth |
|---|---|---|
| 23.25 (590.6) | 8.88 (225.4) | 4.50 (114.3) |

### ECC Unit Enclosures—NEMA Type 3R Outdoor

| Height | Width | Depth |
|---|---|---|
| 23.68 (601.7) | 9.31 (236.5) | 5.44 (138.1) |

1

Approximate Dimensions in Inches (mm)

***Residential Loadcenter Knockouts***

## Knockouts for Box Sizes A1, B1, B2, C1, C2, C4, D1, G1, L1, L2, B1R, B2R, C1R, C3R, D1R, G1R, L1R, L2R

| Code | Diameter | | | | |
|---|---|---|---|---|---|
| A | 0.50 (12.7) | 0.75 (19.1) | — | — | — |
| B | 0.50 (12.7) | — | — | — | — |
| C | 0.50 (12.7) | 1.25 (31.8) | 1.50 (38.1) | 2.00 (50.8) | 2.50 (63.5) |
| D | 1.25 (31.8) | 1.25 (31.8) | 2.00 (50.8) | 2.50 (63.5) | — |
| E | 0.50 (12.7) | 0.75 (19.1) | 1.00 (25.4) | — | — |
| F | 0.50 (12.7) | 0.75 (19.1) | 1.00 (25.4) | 1.50 (38.1) | 2.00 (50.8) |
| G | 1.25 (31.8) | 1.50 (38.1) | 2.00 (50.8) | — | — |
| H | 0.50 (12.7) | 0.75 (19.1) | 1.00 (25.4) | 1.25 (31.8) | 1.50 (38.1) |
| I | 1.00 (25.4) | 1.25 (31.8) | 1.50 (38.1) | 2.00 (50.8) | 2.50 (63.5) |
| J | 1.00 (25.4) | 1.25 (31.8) | 1.50 (38.1) | — | — |

## Residential NEMA Type 1 Indoor and NEMA Type 3R Outdoor Enclosures

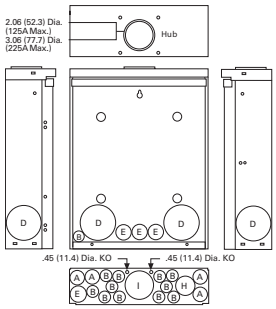


***Outdoor Boxes B1R, B2R, C1R, C3R, D1R, G1R, L1R, L2R***

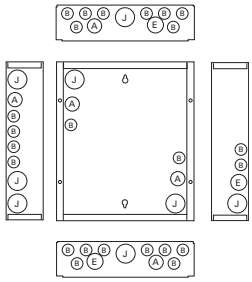

***Indoor Boxes A1***

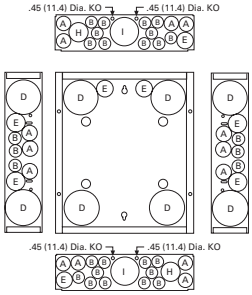


***Indoor Boxes B1, B2***

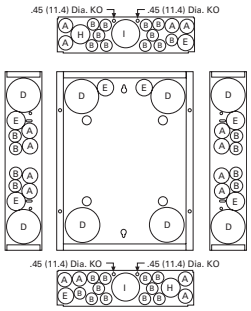


***Indoor Boxes C1, C2, C4, D1, G1, L1, L2***

Approximate Dimensions in Inches (mm)

### Knockouts for Box Sizes 3, 4, 5, 6, 7, 9, 2R, 3R, 4R, 5R, 6R, 7R, 8R, 9R

| Code | Diameter | | | |
|---|---|---|---|---|
| A | 0.50 (12.7) | — | — | — |
| B | 0.50 (12.7) | 0.75 (19.1) | — | — |
| C | 0.50 (12.7) | 0.75 (19.1) | 1.00 (25.4) | — |
| D | 0.50 (12.7) | 0.75 (19.1) | 1.00 (25.4) | 1.25 (31.8) |
| E | 0.75 (19.1) | 1.00 (25.4) | 1.25 (31.8) | — |
| F | 0.75 (19.1) | 1.00 (25.4) | 1.25 (31.8) | 1.50 (38.1) |
| G | 1.00 (25.4) | 1.25 (31.8) | 1.50 (38.1) | — |
| H | 1.00 (25.4) | 1.25 (31.8) | 1.50 (38.1) | 2.00 (50.8) |
| I | 1.25 (31.8) | 1.50 (38.1) | 2.00 (50.8) | — |

### Residential NEMA Type 1 Indoor and NEMA Type 3R Outdoor Enclosures

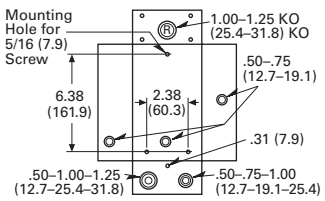


*Box 2, 2R*

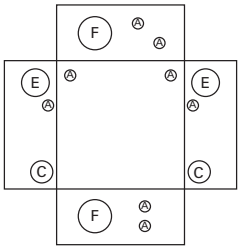

*Box 3*

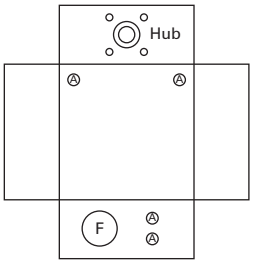


*Box 3R*

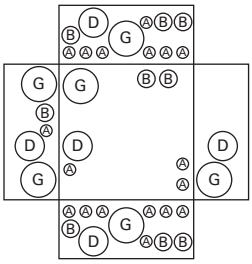

*Box 4*

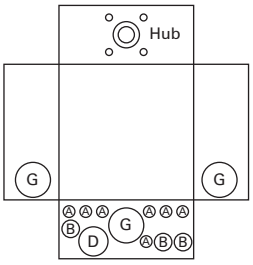


*Box 4R*

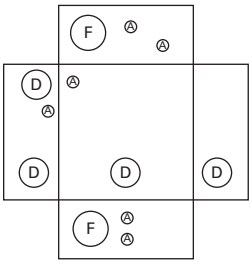

*Box 5*

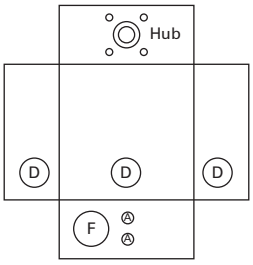


*Box 5R*

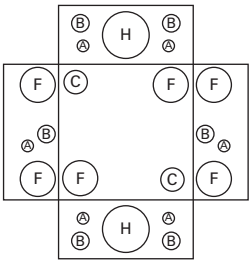

*Box 6*

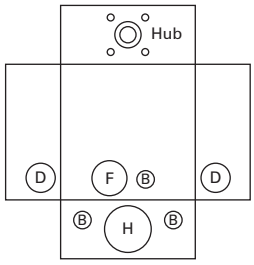


*Box 6R*

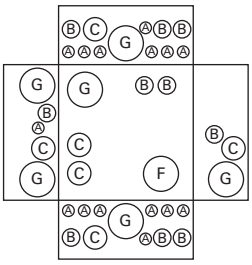

*Box 7*

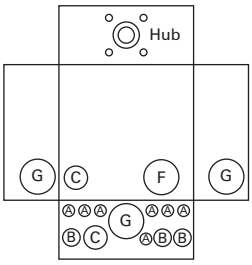


*Box 7R*

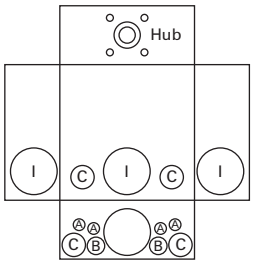


*Box 8R*

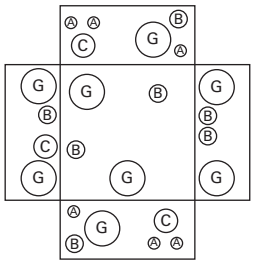

*Box 9*

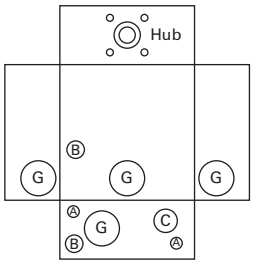


*Box 9R*

1

Approximate Dimensions in Inches (mm)

***Commercial Loadcenter Knockouts***

### NEMA Type 1 Indoor Commercial Enclosures Knockouts for Box Sizes 19, 20, 22, 24

| Code | Diameter | | | |
|---|---|---|---|---|
| A | 0.50 (12.7) | — | — | — |
| B | 0.50 (12.7) | 0.75 (19.1) | — | — |
| C | 0.75 (19.1) | 1.00 (25.4) | 1.50 (38.1) | — |
| D | 1.50 (38.1) | 2.00 (50.8) | 2.50 (63.5) | 3.00 (76.2) |
| E | 2.00 (50.8) | 2.50 (63.5) | 3.00 (76.2) | — |
| F | 2.50 (63.5) | 3.00 (76.2) | 3.50 (88.9) | — |

### NEMA Type 3R Outdoor Commercial Enclosures Knockouts for Box Sizes 42, 43, 46, 47

| Code | Diameter | | | |
|---|---|---|---|---|
| A | 0.50 (12.7) | — | — | — |
| B | 0.50 (12.7) | 0.75 (19.1) | — | — |
| C | 0.75 (19.1) | 1.00 (25.4) | 1.25 (31.8) | — |
| D | 1.50 (38.1) | 2.00 (50.8) | 2.50 (63.5) | — |
| E | 2.00 (50.8) | 2.50 (63.5) | 3.00 (76.2) | — |
| F | 2.50 (63.5) | 3.00 (76.2) | 3.50 (88.9) | — |
| G | 1.25 (31.8) | 1.50 (38.1) | 2.00 (50.8) | 2.50 (63.5) |
| H | 3.25 (82.6) Sq. | — | — | — |

### Unit Enclosure Knockouts, Types ECB and ECC Knockouts

| Code | Diameter | | | | |
|---|---|---|---|---|---|
| **NEMA Type 1 Indoor (Flush and Surface Trims)** | | | | | |
| A | 0.50 (12.7) | — | — | — | — |
| B | 1.25 (31.8) | 1.50 (38.1) | 1.75 (44.5) | 2.00 (50.8) | 2.50 (63.5) |
| **NEMA Type 3R Outdoor** | | | | | |
| A | 0.50 (12.7) | — | — | — | — |
| B | 1.25 (31.8) | 1.50 (38.1) | 1.75 (44.5) | 2.00 (50.8) | 2.50 (63.5) |

### Indoor Commercial Enclosures

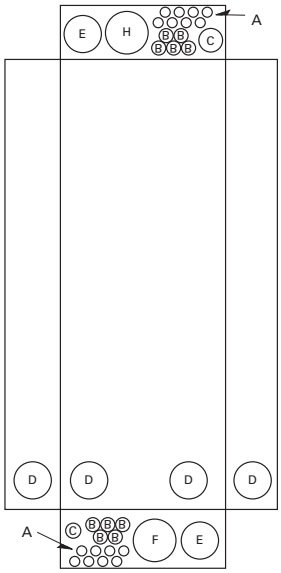


*Box 19, 20*

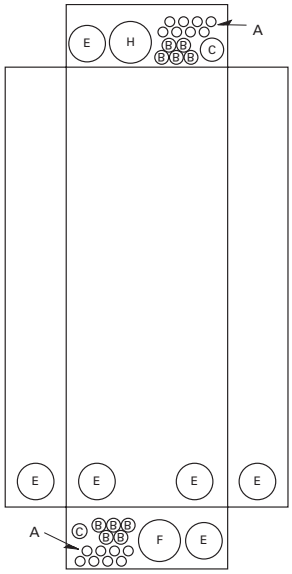


*Box 22, 24*

### Outdoor Commercial Enclosures

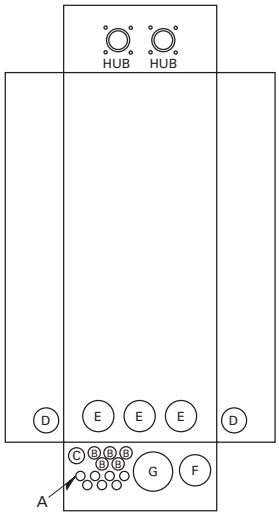


*Box 42*

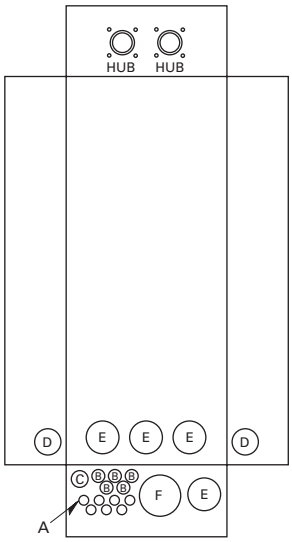


*Box 43, 46, 47*

### Unit Enclosure Knockouts

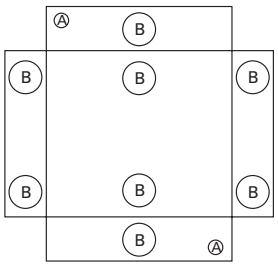


*NEMA Type 1—Indoor*

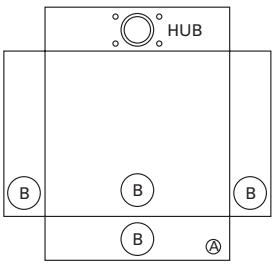


*NEMA Type 3R—Outdoor*

## Technical Data and Specifications

### General

A. The Contractor shall furnish and install deadfront loadcenters incorporating circuit breakers of the number, rating and type as specified herein and as shown on the contract drawings.

B. The loadcenter and all components shall be designed, manufactured and tested in accordance with the latest applicable standards of UL, NEMA and NEC including:

1. UL 67—Standards for Panelboards.

C. UL 50—Standards for Cabinets and Boxes.

D. UL 489—Standards for Molded Case Circuit Breakers.

E. UL 869—Standards for Service Equipment.

F. Federal Specification W-C 375B—Circuit Breakers.

G. Federal Specification W-C P115b—Panel Power Distribution Type 1, Class 2.

### Qualifications

A. The manufacturer of the loadcenter shall be the manufacturer of the circuit breaker within the loadcenter.

B. For the equipment specified herein, the manufacturer shall be ISO 9000 certified.

C. The manufacturer of this equipment shall have produced similar electrical equipment for a minimum period of seven (7) years.

### Manufacturers

A. Eaton.

### Ratings

A. Loadcenters shall be rated for 120/240 Vac and shall have short-circuit ratings as shown on the drawings or as herein scheduled, but not less than 10,000 amperes rms symmetrical.

B. Circuit breakers shall be a minimum of 125 A frame. Circuit breakers 15 through 125 A trip size shall take up the same pole spacing.

C. Loadcenters shall be labeled with a UL short-circuit rating. When series combination ratings are applied with integral or remote upstream devices, a label shall be provided. Series combination ratings shall cover all trip ratings of installed frames. It shall state the conditions of the UL series ratings including:

1. Size and type of upstream device.

2. Branch devices that can be used.

3. UL series short circuit rating.

### Construction

A. All interiors, with the exception of the branch circuit breakers, shall be completely factory assembled with main breakers, main lugs, or no main device.

B. Interiors shall be designed so that circuit breakers can be replaced without disturbing adjacent units and without removing the main bus connectors and shall be designed so that circuits may be changed without machining, drilling, or tapping.

C. Physical means shall be provided to prevent the installation of more overcurrent devices than that number for which the enclosure was designed, rated and approved. Half-size breakers shall have a UL listed rejection tab over the line terminals. Loadcenter interiors must have notched stabs to accept these rejection tab class CTL breakers, if required and approved.

### Bus

A. Busbars for the main and cross connectors shall be [tin-plated aluminum] [copper] in accordance with Underwriters Laboratories standards. Busing shall be braced throughout to conform to industry standard practice governing short-circuit stresses in loadcenters.

**Note:** Note to spec writer—select one (copper available in limited ratings).

B. Neutral busing shall have a suitable lug for each outgoing feeder requiring a neutral connection of same ampacity as branch.

### Wiring/Termination

A. All wire connectors and terminals shall be of the anti-turn solderless type and shall be suitable for copper or aluminum wire of the sizes indicated. All connectors must meet the "Requirements for Wire Connectors and Soldering Lugs" as stated in UL 486B.

B. All loadcenters where marked shall be suitable for use with 60 °C or 75 °C rated wire.

### Circuit Breakers

A. Circuit breakers shall be molded case type. Circuit breakers shall have four-rivet construction (GFI Type—5 rivets). Multipole circuit breakers shall be of a stack pole design to provide electrical phase isolation.

B. Each pole of the circuit breaker will provide inverse time delay overload and instantaneous short-circuit protection by means of both thermal and magnetic sensors.

C. The circuit breaker calibration shall not be affected by environmental changes in relative humidity. The thermal bimetal element shall be welded to the steel frame and calibration shall be set independent of the molded case by computer controlled equipment.

D. All circuit breakers shall be operated by a toggle-type handle and multipole circuit breakers shall have an internal common trip mechanism. The circuit breakers shall incorporate trip mechanisms that are mechanically trip-free from the handle. The handle position shall provide visual trip indication.

E. Contacts shall be of non-welding silver alloy.

F. All circuit breakers shall have the trip rating inscribed on the handle on each circuit breaker pole. Also, unique color-coded cases that indicate the UL listed 10 kA or 22 kA interrupting ratings. Breakers shall be able to be used as main or branch disconnect devices.

G. Branch circuit breakers may also be used in the 1/2-inch (12.7 mm) per pole ratings that include two-pole 1-inch (25.4 mm) wide modules and four-pole 2-inch (50.8 mm) wide modules. Two-pole circuit breakers must incorporate a common trip mechanism. The exclusive CTL rejection tab feature shall be provided to limit the number of branch devices for a loadcenter to 42, in compliance with NEC Article 384.15.

H. Circuit breakers shall be completely enclosed in a molded case of thermoset material. No internal aluminum parts shall be used. All internal ferrous parts shall be plated to prevent corrosion.

I. All terminals shall be listed for use with copper or aluminum conductors. Terminals shall be of the box lug or clamp type design. The terminals shall meet UL 486B requirements and shall be suitable for use with either 60 °C or 75 °C wire.

J. The calibrated bimetal assembly shall be mechanically isolated from the load terminal using a flexible braided copper shunt wire, such that movement of the terminals due to twisting and overtorquing does not affect breaker calibration.

K. Breakers shall be SWD rated and/or HACR rated as required.

L. Arc Fault Interrupting circuit breakers, (AFI), shall be provided on all 15 and 20 A single-phase 120/240 Vac circuits except those indicated as remote controlled breakers. AFI breakers shall be "Classified for mitigating the effects of arcing faults," or conforming to UL Standard 1699 and as defined by Article 210.12 Section A of the 1999 NEC Code.

**Surge Protection Devices**

See Volume 1, Tab 2 for complete details on surge protection.

**Enclosures**

A. Loadcenter shall have NEMA Type 1 general purpose or NEMA Type 3R rainproof enclosures as indicated on the drawings and shall be surface or combination flush/surface mounted except where noted.

B. Boxes shall be made from galvanized sheet steel having multiple knockouts. Rainproof boxes shall use galvanized steel or an approved coating system which meets or exceeds standards for outdoor NEMA Type 3R enclosures. Boxes shall be of sufficient size to provide at least a minimum code gutter space on all sides.

C. The deadfront shall have an easy adjustment feature for flush applications.

D. Boxes shall be factory assembled into a single rigid structure.

E. Unless otherwise noted on drawings, hinged doors covering all circuit breaker handles shall be included in all trims. Trim doors shall not uncover any live parts in making the circuit breaker handles accessible. If key locks are required, all locks shall be keyed alike.

F. Combination trims for flush and surface panels shall be flat and shall overlap the box by at least 5/8-inch (15.9 mm) all around. Trims shall be mounted by a screwdriver without the need for special tools.

**Finish**

A. Trims shall be bonderized and finished with a light gray ANSI-61 enamel. The paint finish shall be of a type to which field applied paint will adhere.

**Factory Testing**

A. The standard factory tests shall be performed on the equipment provided under this section. All tests shall be in accordance with the latest version of UL and NEMA.

Type BR Retrofit Interior

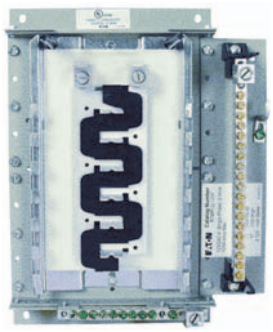

*Type BR Retrofit Adjustable Interior*

*Type BR Retrofit Interior Collar and Assembly with Trim*

## Contents—BR Specialty Products


| *Description* | *Page* |
|---|---|
| Overview | V1-T1-42 |
| BR Specialty Products | |
| BR Quick Connect Neutral Loadcenters | V1-T1-57 |
| Spa Panels | V1-T1-58 |
| Riser Panel | V1-T1-59 |
| Type BR Renovation Loadcenter | V1-T1-60 |
| Type BR Mechanical Interlock Kits | V1-T1-62 |
| Type BR Retrofit Interior Kits | |
| BR Circuit Breakers | V1-T1-76 |


## Type BR Retrofit Interior Kits

### Product Description

Eaton's unique Retrofit Interior allows the customer to cost-effectively and safely upgrade an electrical service without removing the existing enclosure from the wall.

***Quick-Pro℠***

All you need to know to save time and make more money. Specified on certain Eaton products, the Quick-Pro symbol allows for immediate recognition of products that are designed for straightforward installation. When you see Quick-Pro, you know you can install quickly—sometimes up to 50% less than the usual installation time—and move on to your next job.

### Application Description

The Retrofit Interior is designed and tested specifically for renovating an outdated electrical panel in an apartment, a condominium or a single family home. These outdated panels are being recognized by local inspectors and other authorities as a possible hazard.

***Opportunities to Retrofit***

- Single- or three-phase
- Main lug only or main breaker
- Up to 42 circuits
- Up to 225 A interiors, 400 A available upon request
- Available with CH breakers (3/4-inch) with copper bus or BR breakers (1-inch) with aluminum bus
- The minimum lifetime warranty for residential breakers shall be as follows:
  - 10-year warranty on all BR branch breakers and loadcenters
  - Refer to Eaton for complete warranty details

### Features and Benefits

***Upgrading Existing Electrical Infrastructure Is Simple***

- Replaces vintage brands that have hard to find, expensive replacement breakers
- Safety upgrade to arc fault and ground fault breakers to meet current electrical codes
- Maximizes number of circuits available with compact design
- Eco-friendly in asbestos-filled environments
- Exclusive design

***Save Time and Money Throughout the Installation***

- Uses existing panel box and wires
- Eliminates expensive and time-consuming drywall/paint repair
- Saves 2–3 hours of installation time compared to a complete panel changeout
- Eliminates precise measurements with field-adjustable kit

***Detailed Product Guide***

All standard retrofit kits are suitable for a range of existing box sizes:

- Box width ranging from 14.50 to 22.00 inches (368.3 to 558.8 mm)
- Box depth ranging from 4.00 inches (101.6 mm) for BR
- Box height ranging from 21.00 to 45.00 inches (533.4 to 1143.0 mm)

For box dimensions outside of these ranges, contact the Lincoln Flex Center at 800-330-6479. Be sure to provide the existing incoming line wire size.

### Standards and Certifications

- Meets 2008/2011/2014 NEC wire bending requirements
- UL 67 Listed (for UL listings for specific part numbers, see the table on the following page.

1

## BR Specialty Product Selection

To select the retrofit kit:

1. From the existing box size determine which retrofit groups are suitable (may be more than one).
2. Use type of interior, number of phases, and type of main to find the selection chart.
3. Select part number from chart (if main breaker, replace XXX with specific amp rating).
4. Note that the overlap of the existing wall is the retro cover size minus the existing box size. If specific measurements are needed, communicate that you need a custom trim size.
5. Contact the Lincoln Flex Center at 800-330-6479 for pricing, lead-times, and order entry instructions.

***How to Order:***

1. Measure the existing panel enclosure to determine appropriate kits for your project.
2. Match the existing dimensions with the table below to obtain the correct catalog number.
3. Order your retrofit kit from a local Eaton authorized distributor.

Need assistance or can't find retrofit to fit existing enclosure?

Call Eaton's Residential Flex Center at 1-800-330-6479 or email for all your retrofit needs. Go to www.eaton.com/eccn to locate an Eaton Certified Contractor.

### Retrofit Interior Kit Specifications

Five recommended groups: existing box height determines retro group size. Approximate Dimensions in Inches (mm).

| | | Existing Enclosure Parameters—Inches (mm) | | | | | | | | | |
|---|---|---|---|---|---|---|---|---|---|---|---|
| **Catalog Number ①** | **Cover ②** | **Minimum Depth** | **Maximum Depth** | **Minimum Width** | **Minimum Height** | **Phase** | **Main** | **Bus** | **Amperes ③** | **Spaces / Circuits** | **UL 67 Listed** |
| **BR Retrofit Interiors and Covers** | | | | | | | | | | | |
| **RTBR8L100P** | **CRTBR8ML****** | 3.13 (79.5) | 3.63 (92.2) | 10.50 (266.7) | 13.00 (330.2) | Single | MLO | BR | 100 | 16 | Yes |
| **RUBR8L100_** | **CRUBR8ML****** | 3.75 (95.3) | 6.00 (152.4) | 10.50 (266.7) | 13.00 (330.2) | Single | MLO | BR | 100 | 16 | Yes |
| **RTBR12L100P** | **CRTBR12ML****** | 3.13 (79.5) | 3.63 (92.2) | 10.50 (266.7) | 14.50 (368.3) | Single | MLO | BR | 100 | 24 | Yes |
| **RTBR10B100P** | **CRTBR12ML****** | 3.13 (79.5) | 3.63 (92.2) | 10.50 (266.7) | 14.50 (368.3) | Single | MLO | BR | 100 | 20 | Yes |
| **RUBR12L100_** | **CRUBR12ML****** | 3.75 (95.3) | 6.00 (152.4) | 10.50 (266.7) | 14.50 (368.3) | Single | MLO | BR | 100 | 24 | Yes |
| **RUBR10B100_** | **CRUBR12ML****** | 3.75 (95.3) | 6.00 (152.4) | 10.50 (266.7) | 14.50 (368.3) | Single | MB | BR | 100 | 20 | Yes |
| **RTBR12L125P** | **CRTBR12ML****** | 3.13 (79.5) | 3.63 (92.2) | 11.00 (279.4) | 17.00 (431.8) | Single | MLO | BR | 125 | 24 | Yes |
| **RTBR10B125P** | **CRTBR12ML****** | 3.13 (79.5) | 3.63 (92.2) | 11.00 (279.4) | 17.00 (431.8) | Single | MB | BR | 125 | 20 | Yes |
| **RUBR12L125_** | **CRUBR12ML****** | 3.75 (95.3) | 6.00 (152.4) | 11.00 (279.4) | 17.00 (431.8) | Single | MLO | BR | 125 | 24 | Yes |
| **RUBR10B125_** | **CRUBR12ML****** | 3.75 (95.3) | 6.00 (152.4) | 11.00 (279.4) | 17.00 (431.8) | Single | MB | BR | 125 | 20 | Yes |
| **RABR20B125_** | **CRABR20ML****** | 3.75 (95.3) | 6.00 (152.4) | 13.00 (330.2) | 21.00 (533.4) | Single | MCB | BR | 125 | 24 | No |
| **RABR20L125_** | **CRABR20ML****** | 3.75 (95.3) | 6.00 (152.4) | 13.00 (330.2) | 21.00 (533.4) | Single | MLO | BR | 125 | 24 | No |
| **RBBR20B200_** | **CRBBR20BW****** | 3.75 (95.3) | 6.00 (152.4) | 13.00 (330.2) | 29.00 (736.6) | Single | MLO | BR | 200 | 40 | No |
| **RCBR40L200_** | **CRCBR40ML****** | 3.75 (95.3) | 6.00 (152.4) | 13.00 (330.2) | 34.00 (863.6) | Single | MLO | BR | 200 | 40 | No |
| **RDBR40B200_** | **CRDBR40BW****** | 3.75 (95.3) | 6.00 (152.4) | 13.00 (330.2) | 37.00 (939.8) | Single | MLO | BR | 200 | 40 | No |

***Notes***

① Catalog numbers shown with "_" at the end need one of the following suffixes to denote depth:
J = 3.75–4.25
K = 4.25–5.00
L = 5.00–6.00
Example: RTBR12L125J would signify an interior set with a depth range of 3.75 to 4.25 inches.

② ****Denotes characters in the catalog number that relate to overall cover size.
Example: CRTBR12ML2620 would signify a cover 26.00 inches H x 20.00 inches W.

③ Amperes for MB panels is maximum; catalog number will reflect actual amperage of breaker included.

For UL applications, maximum cover sizes may apply.

***Complete Assembly***

**Note:** For complete assembly, interior and cover need to be ordered separately.

### Adjustable Interior

- Factory installed ground and neutral bars positioned to accept existing wires
- Field adjustable depth matches existing panel box
- Adjustable height enables optional placement of the interior
- Field bondable for service entrance options

***Adjustable Interior***

### Standard Trim and Collar

- Standard trim matches new interior
- New circuit directory for updated labeling
- Oversized collar eliminates expensive wall/paint repair

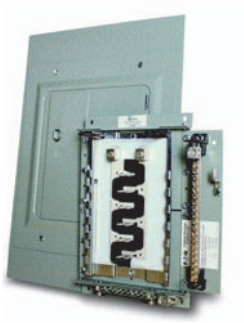

***Collar and Assembly with Trim***

BR Circuit Breakers

## Contents


| *Description* | *Page* |
|---|---|
| Overview | **V1-T1-42** |
| BR Specialty Products | |
| BR Quick Connect Neutral Loadcenters | **V1-T1-57** |
| Spa Panels | **V1-T1-58** |
| Riser Panel | **V1-T1-59** |
| Type BR Renovation Loadcenter | **V1-T1-60** |
| Type BR Mechanical Interlock Kits | **V1-T1-62** |
| Type BR Retrofit Interior Kits | **V1-T1-73** |
| BR Circuit Breakers | |
| Product Selection | **V1-T1-77** |
| Circuit Breaker Accessories | **V1-T1-85** |
| Wiring Diagrams | **V1-T1-87** |


## BR Circuit Breakers

### Product Description

***Plug-On Branch Feeder Type Arc Fault Circuit Breakers, Type BR—10 kAIC, 120 Vac and 120/240 Vac***

A branch feeder type arc fault circuit interrupter is a device intended to mitigate high current arcing faults in the complete circuit, including connected cords. High current arcing faults can occur from line to neutral or line to ground. These arcing faults are in parallel with the load and produce the most energy of all arcing faults.

The branch feeder type AFCI is required in the 1999 and 2002 National Electrical Code.

The Combination Type AFCI is required in the 2005, 2008, and 2011 National Electrical Code.

***Plug-On Combination Type Arc Fault Circuit Breakers, Type BR—10 kAIC, 120 Vac and 120/240 Vac***

A combination type arc fault circuit interrupter is a device that includes all of the protection offered by the branch feeder AFCI (mitigation of high current arcing faults in the complete circuit, including connected cords). In addition it provides direct detection of persistent low current arcing faults down to 5 amps with associated mitigation of fire hazards in the cords connected to the outlets. High current arcing faults can occur from line to neutral or line to ground. These arcing faults are in parallel with the load and produce the most energy of all arcing faults. The current level of low current arcing faults is limited by the load.

***Plug-On Ground Fault Circuit Breakers, Type GFCB and GFEP—10/22 kAIC, 120 Vac and 120/240 Vac***

**Ground Fault Application Notes**

Single-pole GFCBs are designed for use in two-wire, 120 Vac circuits. See **Page V1-T1-87** for a typical wiring configuration.

Two-pole GFCBs are designed for use in three-wire, 120/240 Vac circuits, 120 Vac multiwire circuits employing common, neutral and two-wire, 240 Vac circuits obtained from a 120/240 Vac source.

**Page V1-T1-87** shows typical wiring configurations for a 120/240 Vac multiwire circuits, and a 240 Vac, two-wire circuit. Note the "panel neutral" conductor connects to the neutral bar, even though the neutral is not included in the load circuit. This connection is necessary to supply a 120 Vac power source to the ground fault sensing circuit.

The figures are shown with a 120/240 Vac, single-phase, three-wire power source, but are also applicable to a 120/208 Vac, three-phase, four-wire power supply. For all figures, the electrical operation of the GFCB is not affected by the equipment ground.

***Non-CTL Plug-On Replacement —Circuit Breakers, Type BRD—10 kAIC, 120/240 Vac***

**Non-CTL 10 kAIC for Replacement Purposes Only**

For replacement in enclosures manufactured prior to 1968 with unnotched stabs. Circuit breakers do not have rejection tab.

## Product Selection

***Plug-On Circuit Breakers, Types BR—10/22/42 kAIC, 120 Vac, 120/240 Vac and 240 Vac***

**BR120**

**BR215**

**BR320**

**BRH2100**

**BRX2125**

### Type BR Breakers, 1-Inch (25.4 mm) per Pole 120/240, 10, 22 and 42 kAIC

| | | Single-Pole 120/240 Vac Requires One 1-Inch (25.4 mm) Space | | Two-Pole 120/240 Vac Common Trip Requires Two 1-Inch (25.4 mm) Spaces | | | |
|---|---|---|---|---|---|---|---|
| | | 10 per Shelf Carton | | 5 per Shelf Carton | | | |
| | | 10 kAIC | 22 kAIC | 10 kAIC | 22 kAIC | 42 kAIC | 65 kAIC |
| Ampere Rating | Wire Size Range Cu/Al 60 °C or 75 °C | Catalog Number | Catalog Number | Catalog Number | Catalog Number | Catalog Number | Catalog Number |
| 10 | #14–4 | **BR110** | — | **BR210** | — | — | — |
| 15 | #14–4 | **BR115** ①② | **BRH115** | **BR215** ③ | **BRH215** | — | — |
| 20 | #14–4 | **BR120** ①② | **BRH120** | **BR220** ③ | **BRH220** | — | — |
| 25 | #14–4 | **BR125** | **BRH125** | **BR225** ③ | **BRH225** | — | — |
| 30 | #14–4 | **BR130** | **BRH130** | **BR230** ③ | **BRH230** | — | — |
| 35 | #14–4 | **BR135** | **BRH135** | **BR235** ③ | **BRH235** | — | — |
| 40 | #14–4 | **BR140** | **BRH140** | **BR240** ③ | **BRH240** ③ | — | — |
| 45 | #14–4 | — | **BRH145** | **BR245** ③ | **BRH245** | — | — |
| 50 | #14–4 | **BR150** | **BRH150** | **BR250** ③ | **BRH250** ③ | — | — |
| 55 | #14–3 | **BR150** | **BRH155** | **BR255** | **BRH255** | — | — |
| 60 | #8–1/0 | **BR160** | **BRH160** | **BR260** | **BRH260** | **BRHH260** | **BRX260** |
| 70 | #8–1/0 | **BR170** | **BRH170** | **BR270** | **BRH270** | **BRHH270** | **BRX270** |
| 80 | #8–1/0 | — | — | **BR280** | **BRH280** | **BRHH280** | **BRX280** |
| 90 | #8–1/0 | — | — | **BR290** | **BRH290** | **BRHH290** | **BRX290** |
| 100 | #8–1/0 | — | — | **BR2100** | **BRH2100** | **BRHH2100** | **BRX2100** |
| 110 | #8–1/0 | — | — | **BR2110** | **BRH2110** | **BRHH2110** | **BRX2110** |
| 125 | #4–2/0 | — | — | **BR2125** | **BRH2125** | **BRHH2125** | **BRX2125** |
| 150 | #4–2/0 | — | — | **BR2150** ④ | — | — | — |

***Notes***

① One pole, 1-inch (25.4 mm) per pole circuit breakers are available with high magnetic setting for switching large tungsten lamp loads. Add suffix H to catalog number.
② Switching duty rated.
③ On the black handle breaker, add suffix "B" to the catalog number to obtain a tapped molded opening for proper use with hold-down kits.
④ For use as a branch circuit breaker in 400 and 600 ampere panels only.

All Type BR single-, two- and three-pole circuit breakers carry listing for HACR application. For circuit breakers with a shunt trip, add ST suffix.

1

**BR Breakers**

## Type BR Breakers, 1-Inch (25.4 mm) per Pole 240 Vac, 10, 22 and 42 kAIC

| Ampere Rating | Wire Size Range Cu/Al 60 °C or 75 °C | Three-Pole 240 Vac Common Trip Requires Three 1-Inch (25.4 mm) Spaces<br>5 per Shelf Carton<br>10 kAIC<br>Catalog Number | <br>22 kAIC<br>Catalog Number |
|---|---|---|---|
| 10 | #14–4 | **BR310** | — |
| 15 | #14–4 | **BR315** ① | **BRH315** |
| 20 | #14–4 | **BR320** ① | **BRH320** |
| 25 | #14–4 | **BR325** | **BRH325** |
| 30 | #14–4 | **BR330** | **BRH330** |
| 35 | #14–4 | **BR335** | **BRH335** |
| 40 | #14–4 | **BR340** | **BRH340** |
| 45 | #14–4 | **BR345** | **BRH345** |
| 50 | #14–4 | **BR350** | **BRH350** |
| 55 | #14–3 | **BR355** | **BRH355** |
| 60 | #4–1/0 | **BR360** | **BRH360** |
| 70 | #4–1/0 | **BR370** | **BRH370** |
| 80 | #4–1/0 | **BR380** | **BRH380** |
| 90 | #4–1/0 | **BR390** | **BRH390** |
| 100 | #4–1/0 | **BR3100** | **BRH3100** |

***Plug-On Branch Feeder Type Arc Fault Circuit Breakers, Type BR—10 kAIC, 120 Vac and 120/240 Vac***

**Type BR AFCI Circuit Breaker**

## Type BR, 1-Inch (25.4 mm) Wide FIRE-GUARD AFCI Circuit Breakers

| Poles | Ampere Rating | Configuration | Catalog Number |
|---|---|---|---|
| Single-pole 10 kAIC | 15 | AFCI | **BR115AF** ② |
| | 20 | AFCI | **BR120AF** ② |
| Single-pole 22 kAIC | 15 | AFCI | **BRH115AF** |
| | 20 | AFCI | **BRH120AF** |
| Two-pole 10 kAIC ③④ | 15 | AFCI Common Trip | **BRL215AF** |
| | 20 | AFCI Common Trip | **BRL220AF** |

***Notes***

① One pole, 1-inch (25.4 mm) per pole circuit breakers are available with high magnetic setting for switching large tungsten lamp loads. Add suffix H to catalog number.

② Clamshell packaging available with CS modification code on the end of catalog number.

③ Common trip refers to two-pole 240 V load application sourced by 120/240 Vac (see **Page V1-T1-87**).

④ Independent trip refers to two-pole multi-wire, home run or shared neutral circuits (see **Pages V1-T1-87** and **V1-T1-88**).

All Type BR single-, two- and three-pole circuit breakers carry listing for HACR application. For circuit breakers with a shunt trip, add ST suffix.

### *Plug-On, Dual Purpose Arc Fault/ Ground Fault Circuit Breakers, Type BR—10 kAIC, 120 Vac*

**BRLAFGF115**

## Type BR, 1-Inch (25.4 mm) wide Dual Purpose AF/GF Circuit Breakers ①②

| Poles | Ampere Rating | Configuration | Catalog Number |
|---|---|---|---|
| Single-pole 10 kAIC | 15 | Combination AFCI GFCI | **BRLAFGF115** |
| | 20 | Combination AFCI GFCI | **BRLAFGF120** |

### *Plug-On Combination Type Arc Fault Circuit Breakers, Type BR—10 kAIC, 120 Vac and 120/240 Vac*

**BRCAF115**

## Type BR, 1-Inch (25.4 mm) wide FIRE-GUARD Combination Type AFCI Circuit Breakers

| Poles | Ampere Rating | Configuration | Catalog Number |
|---|---|---|---|
| Single-pole 10 kAIC | 15 | AFCI | **BRCAF115** ③ |
| | | Diagnostic AFCI | **BRACAF115** |
| | 20 | AFCI | **BRCAF120** ③ |
| | | Diagnostic AFCI | **BRACAF120** |
| Single-pole 22 kAIC | 15 | AFCI | **BRHCAF115** ③ |
| | 20 | AFCI | **BRHCAF120** ③ |
| Two-pole 10 kAIC | 15 | AFCI | **BRL215CAF** |
| | 20 | AFCI | **BRL220CAF** |

### *Plug-On Ground Fault Circuit Breakers, Type GFCB and GFEP—10/22 kAIC, 120 Vac and 120/240 Vac*

**Type GFCB Single-Pole**

**Type GFCB Two-Pole**

## Type GFCB Ground Fault Circuit Breakers—5 Milliampere—1-Inch (25.4 mm) per Pole 120 Vac or 120/240 Vac, 10 kAIC

| Ampere Rating | Wire Size Range Cu/Al 60 °C or 75 °C | 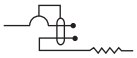 Single-Pole 120 Vac Requires One 1-Inch (25.4 mm) Space 1 per Shelf Carton Catalog Number ④ | Two-Pole 120/240 Vac Common Trip Requires Two 1-Inch (25.4 mm) Spaces 1 per Shelf Carton Catalog Number |
|---|---|---|---|
| 15 | #14–4 | **GFCB115** | **GFCB215** |
| 20 | #14–4 | **GFCB120** | **GFCB220** |
| 25 | #14–4 | **GFCB125** | **GFCB225** |
| 30 | #14–4 | **GFCB130** | **GFCB230** |
| 40 | #14–4 | **GFCB140** | **GFCB240** |
| 50 | #14–4 | — | **GFCB250** ⑤ |
| 60 | #14–6 | — | **GFCB260** |

***Notes***

① Breaker qualifies as combination arc fault, per UL 1699.
② Breaker qualifies as personnel protection ground fault, (5 mA) per UL 943.
③ Clamshell packaging available with CS modification code on the end of catalog number.
④ Available with bell alarm or auxiliary switch. See circuit breaker accessories on **Page V1-T1-85**.
⑤ For use with copper wire only.

## Type GFCBH Ground Fault Breakers—5 Milliampere—1-Inch (25.4 mm) per Pole 120 Vac or 120/240 Vac, 22 kAIC

| Ampere Rating | Wire Size Range Cu/Al 60 °C or 75 °C | 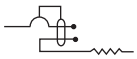 Single-Pole 120 Vac Requires One 1-Inch (25.4 mm) Space 1 per Shelf Carton Catalog Number | 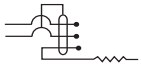 Two-Pole 120/240 Vac Common Trip Requires Two 1-Inch (25.4 mm) Spaces 1 per Shelf Carton Catalog Number |
|---|---|---|---|
| 15 | #14–4 | **GFCBH115** | **GFCBH215** |
| 20 | #14–4 | **GFCBH120** | **GFCBH220** |
| 25 | #14–4 | **GFCBH125** | **GFCBH225** |
| 30 | #14–4 | **GFCBH130** | **GFCBH230** |

## Type GFEP Ground Fault Equipment Protectors—30 Milliampere—1-Inch (25.4 mm) per Pole 120 Vac or 120/240 Vac, 10 kAIC

| Ampere Rating | Wire Size Range Cu/Al 60 °C or 75 °C | Single-Pole 120 Vac Requires One 1-Inch (25.4 mm) Space 1 per Shelf Carton Catalog Number | 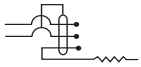 Two-Pole 120/240 Vac Common Trip Requires Two 1-Inch (25.4 mm) Space 1 per Shelf Carton Catalog Number |
|---|---|---|---|
| 15 | #14–4 | **GFEP115** | **GFEP215** |
| 20 | #14–4 | **GFEP120** | **GFEP220** |
| 25 | #14–4 | **GFEP125** | **GFEP225** |
| 30 | #14–4 | **GFEP130** | **GFEP230** |
| 40 | #14–4 | — | **GFEP240** |
| 50 | #14–4 | — | **GFEP250** ① |

***Note***

① For use with copper wire only.

### *CTL Plug-On Circuit Breakers, Type BD Duplex, BQ and BQC Quadplex—10 kAIC, 120/240 Vac*

**BD2020**

**BQ2302115**

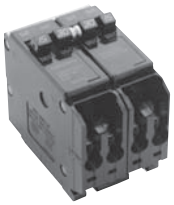

**BQ230230**

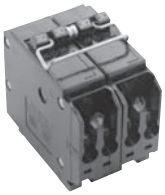

## Class CTL, 1-Inch (25.4 mm) per Pole 10 kAIC—All Circuit Breakers Have Rejection Tab Feature

| Type BD Duplex (UL Type BRD) | | | Type BQ Quadplex Independent Trip (UL Type BRD) | | | | Type BQ Quadplex Independent Trip (UL Type BRD) | | |
|---|---|---|---|---|---|---|---|---|---|
| 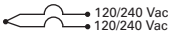  | | | 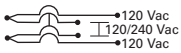  | | | | 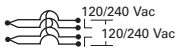  | | |
| **Single-Pole ①** **Requires One 1-Inch (25.4 mm) Space** **10 per Shelf Carton** | | | **Two-Pole ② and Single-Pole ①** **Requires Two 1-Inch (25.4 mm) Spaces** **5 per Shelf Carton** | | | | **Two-Pole** **Requires Two 1-Inch (25.4 mm) Spaces** **5 per Shelf Carton** | | |
| | **120 Vac** | **Wire Size Range** | **120 Vac** | **120/240 Vac** | **120 Vac** | | **120/240 Vac** | | |
| | | | **Ampere Rating** | | | | **Ampere Rating** | | |
| **Ampere Rating** | **Catalog Number** | **Cu/Al 65 °C or 75 °C** | **Outer Left Single-Pole** | **Center Two-Pole Independent Trip** | **Outer Right Single-Pole** | **Catalog Number** | **Outer Two-Pole Independent Trip** | **Center Two-Pole Independent Trip** | **Catalog Number** |
| 10–10 | **BD1010** | #14–4 | 15 | 20 | 15 | **BQ2202115** | 15 | 15 | **BQ215215** |
| 15–15 | **BD1515** | #14–4 | 20 | 20 | 20 | **BQ2202120** | 15 | 20 | **BQ215220** |
| 15–20 | **BD1520** | #14–4 | 15 | 30 | 15 | **BQ2302115** | 15 | 30 | **BQ215230** |
| 15–30 | **BD1530** | #14–4 | 20 | 30 | 20 | **BQ2302120** | 15 | 40 | **BQ215240** |
| 20–15 | **BD2015** | #14–4 | 15 | 40 | 15 | **BQ2402115** | 15 | 50 | **BQ215250** |
| 20–20 | **BD2020** | #14–4 | 20 | 40 | 20 | **BQ2402120** | 20 | 20 | **BQ220220** |
| 20–30 | **BD2030** | #14–4 | 15 | 50 | 15 | **BQ2502115** | 20 | 30 | **BQ220230** |
| 25–25 | **BD2525** | #14–4 | 20 | 50 | 20 | **BQ2502120** | 20 | 40 | **BQ220240** |
| 30–15 | **BD3015** | #14–4 | — | — | — | **—** | 20 | 50 | **BQ220250** |
| 30–20 | **BD3020** | #14–4 | — | — | — | **—** | 25 | 25 | **BQ225225** |
| 30–30 | **BD3030** | #14–4 | — | — | — | **—** | 30 | 30 | **BQ230230** |
| 30–40 | **BD3040** | #14–4 | — | — | — | **—** | 30 | 40 | **BQ230240** |
| 30–50 | **BD3050** | #14–4 | — | — | — | **—** | 30 | 50 | **BQ230250** |
| 50–30 | **BD5030** | #14–4 | — | — | — | **—** | 40 | 40 | **BQ240240** |
| 50–50 | **BD5050** | #14–4 | — | — | — | **—** | 40 | 50 | **BQ240250** |
| — | **—** | — | — | — | — | **—** | 50 | 50 | **BQ250250** |

***Notes***

① All 15 and 20 A single poles are switch-duty rated.

② All Type BD duplex and BQ quadplex circuit breakers carry listing for HACR applications.

1

***Non-CTL Plug-On Replacement—Circuit Breakers, Type BRD—10 kAIC, 120/240 Vac***

**BR2020**

## Class Non-CTL, 1-Inch (25.4 mm) per Pole 10 kAIC—Breakers Do Not Have Rejection Tab Feature

| Type BR Duplex | | | Type Brand BRD Quadplex Independent Trip | | | Type BRD Quadplex Common Trip Center and Outer Poles | | |
|---|---|---|---|---|---|---|---|---|
| 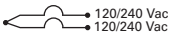  | | | 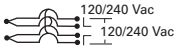  | | | 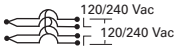  | | |
| **Single-Pole Requires One 1-Inch (25.4 mm) Space 10 per Shelf Carton** | | | **Two-Pole Requires Two 1-Inch (25.4 mm) Spaces 5 per Shelf Carton** | | | **Two-Pole Requires Two 1-Inch (25.4 mm) Spaces 5 per Shelf Carton** | | |
| | **120 Vac** | | **120/240 Vac** | **120/240 Vac** | | **120/240 Vac** | | |
| | | **Wire Size Range** | **Ampere Rating** | | | **Ampere Rating** | | |
| **Ampere Rating** | **Catalog Number** | **Cu/Al 65 °C or 75 °C** | **Outer Two-Pole Independent Trip** | **Center Two-Pole Independent Trip** | **Catalog Number** | **Outer Two-Pole Common Trip** | **Center Two-Pole Common Trip** | **Catalog Number** |
| 15–15 | **BR1515** | #14–4 | 15 | 15 | **BR415** | 15 | 15 | **BRDC215215** |
| 15–20 | **BR1520** | #14–4 | 20 | 20 | **BR420** | 30 | 30 | **BRDC230230** |
| 20–15 | **BR2015** | #14–4 | 30 | 30 | **BR430** | 30 | 40 | **BRDC230240** |
| 20–20 | **BR2020** | #14–4 | 20 | 30 | **BRD220230** | 30 | 50 | **BRDC230250** |
| 30–30 | **BR3030** | #14–4 | 30 | 40 | **BRD230240** | — | — | — |
| 30–50 | **BR3050** | #14–4 | 30 | 50 | **BRD230250** | — | — | — |

## CTL and Non-CTL Breakers

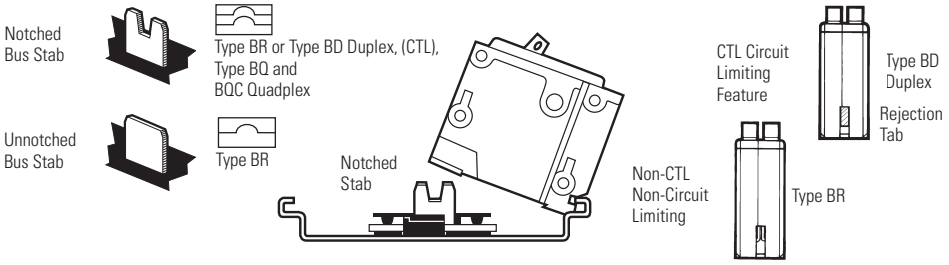


***Note***

Type BD Duplex, BQ and BQC Quadplex circuit breakers can be installed in Circuit Limiting (CTL) listed BR loadcenters. Type BR twin breakers can be installed in Non-CTL BR loadcenters.

### *Common Trip Quadplex Breakers*

**BQC2302115**

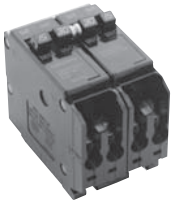

**BQC2302115**

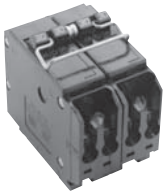

## Class CTL, 1-Inch (25.4 mm) per Pole 10 kAIC—All Circuit Breakers Have Rejection Tab Feature

**Type BQC Quadplex Common Trip Center Poles (UL Type BRD)**

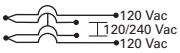


**Two-Pole ① and Single-Pole ②**
**Requires Two 1-Inch (25.4 mm) Spaces**
**5 per Shelf Carton**

**Type BQC Quadplex Common Trip Center and Outer Poles (UL Type BRD)**

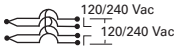


**Two-Pole ①**
**Requires Two 1-Inch (25.4 mm) Spaces**
**5 per Shelf Carton**

| 120 Vac Ampere Rating Outer Left Single-Pole | 120/240 Vac Center Two-Pole Common Trip | 120 Vac Outer Right Single-Pole | Catalog Number | Wire Size Range Cu/Al 65 °C or 75 °C | 120/240 Vac Ampere Rating Outer Two-Pole Common Trip | Center Two-Pole Common Trip | Catalog Number |
|---|---|---|---|---|---|---|---|
| 15 | 20 | 15 | **BQC2202115** | #14–4 | 15 | 15 | **BQC215215** |
| 15 | 25 | 15 | **BQC2252115** | #14–4 | 15 | 20 | **BQC215220** |
| 15 | 30 | 15 | **BQC2302115** | #14–4 | 15 | 30 | **BQC215230** |
| 15 | 40 | 15 | **BQC2402115** | #14–4 | 20 | 15 | **BQC220215** |
| 15 | 50 | 15 | **BQC2502115** | #14–4 | 20 | 20 | **BQC220220** |
| — | — | — | — | #14–4 | 20 | 30 | **BQC220230** |
| — | — | — | — | #14–4 | 20 | 40 | **BQC220240** |
| — | — | — | — | #14–4 | 20 | 50 | **BQC220250** |
| 20 | 15 | 20 | **BQC2152120** | #14–4 | 25 | 25 | **BQC225225** |
| 20 | 20 | 20 | **BQC2202120** | #14–4 | 25 | 30 | **BQC225230** |
| 20 | 25 | 20 | **BQC2252120** | #14–4 | 30 | 15 | **BQC230215** |
| 20 | 30 | 20 | **BQC2302120** | #14–4 | 30 | 30 | **BQC230230** |
| 20 | 40 | 20 | **BQC2402120** | #14–4 | 30 | 40 | **BQC230240** |
| 20 | 50 | 20 | **BQC2502120** | #14–4 | 30 | 50 | **BQC230250** |
| 30 | 50 | 20 | **BQC2502030** | #14–4 | 40 | 30 | **BQC240230** |
| — | — | — | — | #14–4 | 40 | 40 | **BQC240240** |
| — | — | — | — | #14–4 | 40 | 50 | **BQC240250** |
| — | — | — | — | #14–4 | 50 | 20 | **BQC250220** |
| — | — | — | — | #14–4 | 50 | 50 | **BQC250250** |

***Notes***

① All Type BQC quadplex circuit breakers carry listing for HACR applications.
② All 15 and 20 ampere single poles are switch-duty rated.

1

### *Plug-On Circuit Breakers, Types BJ and BJH—10/22 kAIC, 120/240 Vac and 240 Vac*

For Use in Single-Phase and Three-Phase Loadcenters—150 Amperes and Above

**Type BJ**

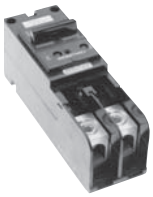

## Types BJ and BJH Breakers, 1-Inch (25.4 mm) per Pole, 120/240 or 240 Vac, 10, 22 kAIC

| | Two-Pole 120/240 Vac Common Trip Requires Four 1-Inch (25.4 mm) Spaces ① 10 per Shelf Carton | | | Three-Pole 240 Vac Common Trip Requires Six 1-Inch (25.4 mm) Spaces ② 5 per Shelf Carton | |
|---|---|---|---|---|---|
| **Ampere Rating** | **10 kAIC Catalog Number** | **22 kAIC Catalog Number** | **Wire Size Range Cu/Al 60 °C or 75 °C** | **10 kAIC Catalog Number** | **22 kAIC Catalog Number** |
| 125 | **BJ2125** | **BJH2125** | #2–300 kcmil | **BJ3125** | **BJH3125** |
| 150 | **BJ2150** | **BJH2150** | #2–300 kcmil | **BJ3150** | **BJH3150** |
| 175 | **BJ2175** | **BJH2175** | #2–300 kcmil | **BJ3175** | **BJH3175** |
| 200 | **BJ2200** | **BJH2200** | #2–300 kcmil | **BJ3200** | **BJH3200** |
| 225 | **BJ2225** | **BJH2225** | #2–300 kcmil | **BJ3225** | **BJH3225** |

### *Plug-On Special Application Circuit Breakers—10 kAIC, 120 Vac, 120/240 Vac and 240 Vac*

**BRWH215**
**Water Heater Breaker**

**BRSN220**
**Switching Neutral Breaker**

## Special Application Circuit Breakers, 1-Inch (25.4 mm) per Pole

| Water Heater Breakers | | Switching Neutral Breakers | | | 240 V Breakers | | Non-Automatic Molded Case Switches | |
|---|---|---|---|---|---|---|---|---|
| LINE / LOAD | | OUT / IN / NEUTRAL | | | | | | |
| Two-Pole 120/240 Vac Common Trip Requires Two 1-Inch (25.4 mm) Spaces With Isolated Line Terminals for Separately Metered Water Heaters 5 per Shelf Carton 10 kAIC | | Two-Pole 120 Vac Common Trip Requires Two 1-Inch (25.4 mm) Spaces With Switching Neutral Pole for Gasoline Pump Applications 5 per Shelf Carton 10 kAIC | | | Two-Pole 240 Vac Common Trip Requires Two 1-Inch (25.4 mm) Spaces Where Voltage to Ground is 240 Vac 5 per Shelf Carton 10 kAIC | | Two-Pole 240 Vac Requires Two 1-Inch (25.4 mm) Spaces For Use as Disconnect Contains No Magnetic or Thermal Trip Properties 5 per Shelf Carton 5 kAIC | |
| **Ampere Rating** | **Catalog Number** | **Ampere Rating** | **Catalog Number** | **Wire Size Range Cu/Al 60 °C or 75 °C** | **Ampere Rating** | **Catalog Number** | **Ampere Rating** | **Catalog Number** |
| 15 | **BRWH215** | 15 | **BRSN215** | #14–4 | 10 | **BR210H** | — | — |
| 20 | **BRWH220** | 20 | **BRSN220** | #14–4 | 15 | **BR215H** | — | — |
| 30 | **BRWH230** | 25 | **BRSN225** | #14–4 | 20 | **BR220H** | — | — |
| — | — | 30 | **BRSN230** | #14–4 | 25 | **BR225H** | — | — |
| — | — | — | — | #14–4 | 30 | **BR230H** | — | — |
| — | — | — | — | #14–4 | 35 | **BR235H** | — | — |
| — | — | — | — | #14–4 | 40 | **BR240H** | — | — |
| — | — | — | — | #14–4 | 45 | **BR245H** | — | — |
| — | — | — | — | #14–4 | 50 | **BR250H** | 50 | **BR250NA** |
| — | — | — | — | #14–4 | 55 | **BR255H** | — | — |
| — | — | — | — | #4–1/0 | 60 | **BR260H** | 60 | **BR260NA** |
| — | — | — | — | #4–1/0 | 70 | **BR270H** | — | — |
| — | — | — | — | #4–1/0 | 80 | **BR280H** | — | — |
| — | — | — | — | #4–1/0 | 90 | **BR290H** | — | — |
| — | — | — | — | #4–1/0 | 100 | **BR2100H** | 100 | **BR2100NA** |

***Notes***

① Breaker uses two 1-inch (25.4 mm) pole spaces on left side and two 1-inch (25.4 mm) pole spaces on right side of loadcenter.

② Breaker uses three 1-inch (25.4 mm) pole spaces on left side and three 1-inch (25.4 mm) pole spaces on right side of loadcenter.

If BJ or BJH breakers are used as a main or a back feed device, a hold-down kit is required. See **Page V1-T1-85**.

## Circuit Breaker Accessories

THS1

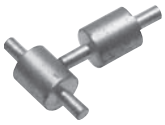

BHLW2

BRQLW

MCBPL (Installed)

BHLW

BRLW2

BREQS125

BRHDK125

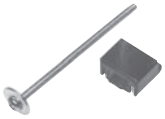

### Field Installation Kits and Parts

| Description | Ordering Quantity ① | Catalog Number |
|---|---|---|
| **Handle Ties ②** | | |
| Handle tie bar for physically joining the handles of two adjacent single-pole Type BR circuit breakers (metal cylinder pin type) | 10 | **BHT** |
| Handle tie bar for joining two independent outside poles of Types BQ and BQC Quadplex and outside poles of two Type BD duplex circuit breakers | 10 | **THOW** |
| Handle tie bar for joining two adjacent outside poles of Types BQ and BQC Quadplex and outside poles of two Type BD duplex circuit breakers | 10 | **THS1** |
| **Handle Lockoffs ③④** | | |
| Padlockable device for locking the handle of single-, two- or three-pole Type BR Circuit Breakers and single-pole of a Type BD Duplex or one independent outside pole of a Type BQ or BQC Quadplex circuit breakers (escutcheon mounted) ⑤ | 10 | **BRLW** |
| Padlockable device for locking the handle of a single-pole Type BR circuit breaker (handle mounted) ⑥ | 10 | **BRLW1** |
| Padlockable device for locking the handle of a two- and three-pole Type BR circuit breaker (handle mounted) ⑥ | 10 | **BRLW2** |
| Padlockable device for locking the handle of a single-pole Type BD Duplex, BQ or BQC Quadplex breaker (handle mounted) ⑥ | 10 | **BRDL1** |
| Padlockable device for locking the handle of the two center poles and the two outer poles of a two-pole Types BQ and BQC quadplex circuit breakers (escutcheon mounted) ⑤ | 10 | **BRQLW** |
| Padlockable device for locking the handle of main circuit breaker Types CC and CHH into the ON or OFF position (screw mounted) ⑦ | 1 | **CCPL** |
| Padlockable device for locking the handle of main breaker Types BW and CSR into the ON or OFF position (escutcheon mounted) ⑤ | 1 | **MCBPL** |
| Device used to secure handle in ON or OFF position for single-, two- or three-pole Type BR circuit breakers and single-pole of Type BD duplex and one independent outside pole of Type BQ or BQC Quadplex circuit breakers (escutcheon mounted) ⑤ | 10 | **BHLW** |
| Device used to secure handle in ON or OFF position for single-pole Type BR circuit breakers (handle mounted) ⑥ | 10 | **BHLW1** |
| Device used to secure handle in ON or OFF position for two- and three-pole Type BR circuit breakers (handle mounted) ⑥ | 10 | **BHLW2** |
| Device used to secure handle in ON or OFF position for single-pole Type GFCB ground fault circuit breakers (handle mounted) ⑥ | 10 | **BHGW** |
| Device used to secure handle in ON or OFF position for one independent outside pole of Types BQ and BQC Quadplex or single-pole Type BD duplex circuit breakers (handle mounted) ⑥ | 10 | **HLW1** |
| **Hold-Down Kits ⑧** | | |
| Hold-down retainer kit for three-pole Type BR circuit breakers in S3100 and 3100R loadcenters only | 1 | **BRHDB** |
| Hold-down screw kit for two- and three-pole Type BR circuit breakers in single-phase MLO loadcenters through 100–125 A | 1 | **BREQS125** |
| Hold-down screw kit for two- and three-pole Type BR circuit breakers in MLO loadcenters 150–225 A | 1 | **BRHDK125** |
| Hold-down screw kit for two-pole Types BJ and BJH circuit breakers in MLO loadcenters 125–225 A | 1 | **BJHDS** |
| Hold-down screw kit for three-pole Types BJ and BJH circuit breakers in MLO loadcenters 125–225 A | 1 | **BJHDS3P** |
| **Main Breaker Lug Kits** | | |
| Types CC and CHH main breaker lug kit (2) 300 kcmil | 1 | **CCL300** |
| Types BW/CSR main breaker lug kit (2) 300 kcmil | 1 | **MCBL300** |

***Notes***

① Must be purchased in multiples of ordering quantities indicated.
② Handle ties: typically used to join two similar independent single-pole breakers to form a two-pole noncommon trip breaker.
③ Handle lockoffs: devices that use a padlock to lock the circuit breaker's handle in the ON or OFF position.
④ See table on **Page V1-T1-86** for handle position changeability chart.
⑤ Escutcheon mounted: device mounted semipermanently to the face of the circuit breaker and secured by the loadcenter deadfront.
⑥ Handle mounted: device mounted directly to the handle by the use of a set screw.
⑦ Screw mounted: device permanently mounted to the face of the circuit breaker by the use of a non-removable screw.
⑧ Hold-down kits: devices used to secure the circuit breaker to the loadcenter for back-feed main application. See NEC Article 384.16(g). Add "B" suffix to two-pole breaker for tapped hole for hold-down kit (ex. BR230B) for BR breakers below 60 A.

BRML

## Field Installation Kits and Parts, continued

| Description | Ordering Quantity ① | Catalog Number |
|---|---|---|
| **Mechanical Interlocks** | | |
| Types BR for two-, three- and four-pole breakers | 10 | **BRML** |
| **Padlock Brackets** | | |
| BR padlock mounting bracket | 10 | **BRPLOFF** |
| BR three-pole lock-off bracket | 10 | **BRPLOFF3P** |
| BJ two-pole lock-off bracket | 10 | **BJL2P** |
| BJ three-pole lock-off bracket | 10 | **BJL3P** |

## Shunt Trips, Auxiliary and Alarm Contacts

| Description | Catalog Number ② Suffix Adder |
|---|---|
| **Shunt Trip for Types BW/CSR** | |
| 12 Volts | **SR12** |
| 24 Volts | **SR24** |
| 120 Volts | **SR01** |
| **Shunt Trip for Types BR** | |
| 120 Volts | **ST** |
| **Auxiliary Contact for Types BW/CSR** | |
| 1NO and 1NC | **AL1** |
| 2NO and 2NC | **AL2** |
| **Alarm Contacts for Types BW/CSR** | |
| Types BW/CSR | **CR1** |
| **Alarm Contacts for Type GFCB (Single-Pole)** | |
| Alarm contact for GFCB (single-pole) | **W1** |
| 1NO and 1NC | **W2** |

## Handle Position Changeability Chart

| | To Change Handle Position from ON to OFF, or OFF to ON You Must... | | |
|---|---|---|---|
| **Handle Lockoff and Lockdog Types** | **Remove Padlock** | **Remove Device** | **Remove Loadcenter Deadfront** |
| Lockoff escutcheon mounted | Remove | — | — |
| Lockoff handle mounted | Remove | Remove | — |
| Lockoff screw mounted | Remove | — | — |
| Lockdog escutcheon mounted | N/A | Remove | Remove |
| Lockdog handle mounted | N/A | Remove | — |

***Notes***

① Must be purchased in multiples of ordering quantities indicated.

② Add suffix indicated to end of breaker catalog number.

## Wiring Diagrams

### Single-Pole 120 V Load Application Sourced by 120/240 Vac

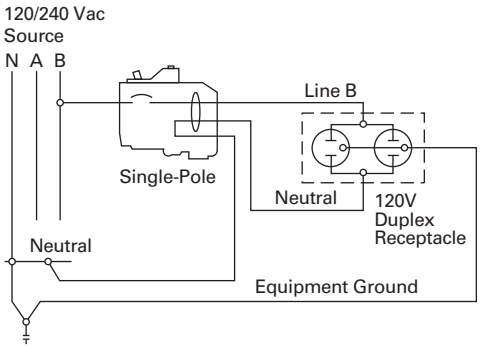


### Two-Pole Shared Neutral with Duplex Receptacle Application

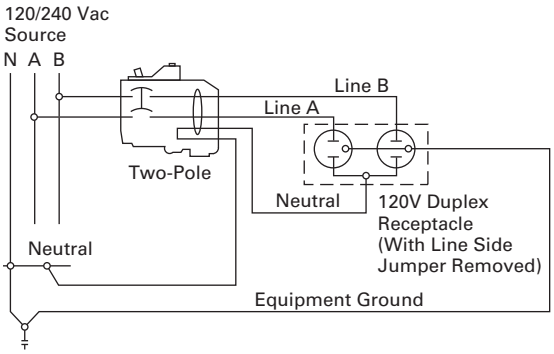


### Two-Pole Shared Neutral with Multi-Duplex Receptacle Application

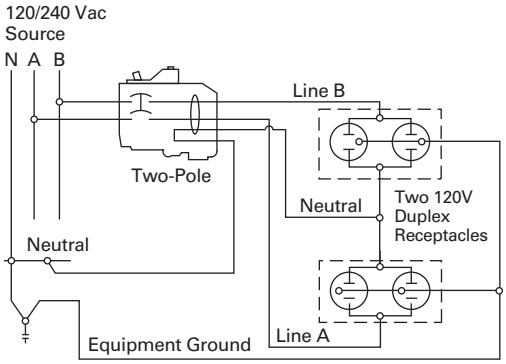


### Single-Pole 120 V Load Application Sourced by 120/240 Vac

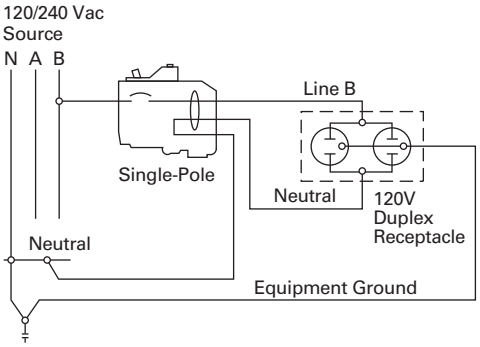


### Two-Pole 240 V Load Application Sourced by 120/240 Vac

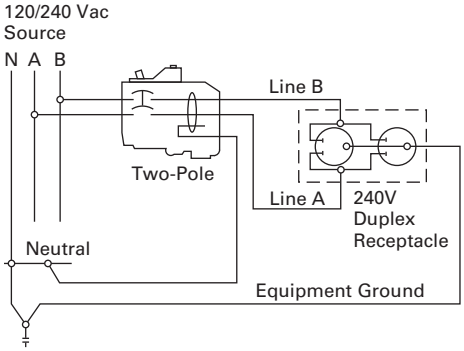


### Single-Pole 120 V Duplex Receptacle Application

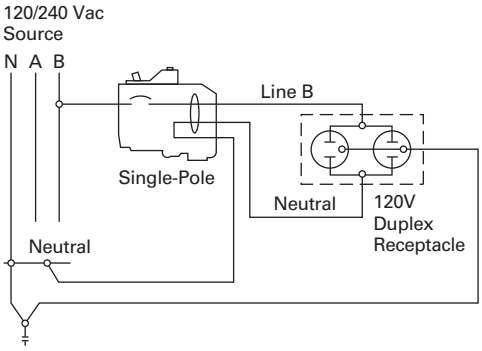

### Two-Pole 120 V Multi-Duplex Receptacle Application

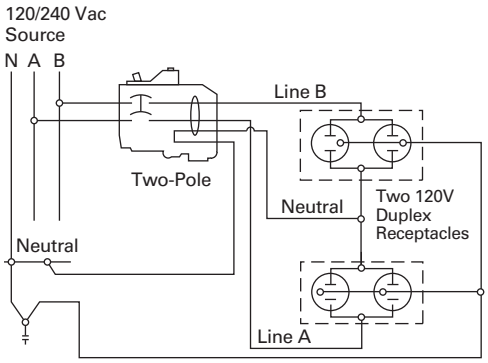


### Two-Pole 120 V Duplex Receptacle Application

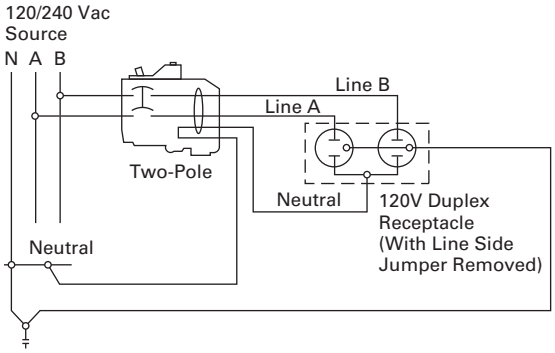


### Two-Pole 240 V Duplex Receptacle Application

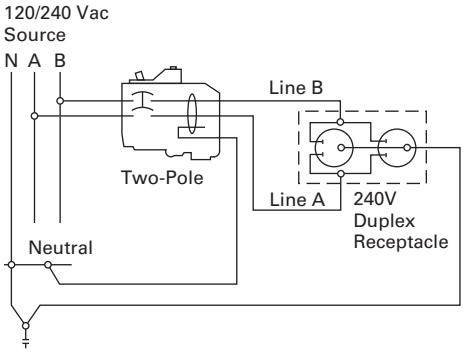

OEM Loadcenters

## Contents


| *Description* | *Page* |
|---|---|
| Standards and Certifications | **V1-T1-90** |
| Product Selection | **V1-T1-90** |


## Product Description

As a leader in the electrical distribution equipment business, Eaton has a unique product offering for equipment manufacturers, panel builders and virtually any OEM that has a need for power distribution within their equipment. The OEM interior offering consists of a wide variety of power distribution options utilizing components from Eaton's CH and BR loadcenter product lines. With high-volume, standardized products, OEMs can expect to receive high-quality products covering configurations meeting virtually any power distribution need.

Coupled with Eaton's expertise in circuit breaker design and manufacturing, OEM interiors provide solid power distribution and circuit protection in a compact, easy-to-install package. Interiors are offered from 2 to 42 circuits and from 70 to 225 A.

### Quality

Built in ISO 9002 certified manufacturing facilities, customers can be assured of the process quality in place for the manufacture of these products. Utilizing the latest in computer-controlled plating, painting, molding, stamping and welding processes, Eaton's customers have come to expect consistent high-quality from shipment to shipment.

### Two Products Offer Design Flexibility

As a manufacturer of two lines of loadcenters, Eaton is in a unique position to offer the broadest range of interiors in the market. Each line has its own unique characteristics that appeal to various segments of the market. OEM interiors are UL recognized components and are listed in either of the following UL files: E8741 or E52977.

The CH interiors feature 100% copper bus and use the CH 3/4-inch (19.1 mm) wide circuit breaker, which minimizes panel space. Recognized by contractors for its sturdy design, the CH interior will appeal to those customers seeking an industrial quality bolted busbar and the space saving of 3/4-inch (19.1 mm) per bus stab. With a typical 12 circuit CH interior, this space savings amounts to an inch and a half savings over its 1-inch (25.4 mm) counterparts. The stab rating of the CH interiors is 140 A maximum meaning that the handle rating of breakers mounted across from one another may not exceed 140 A.

The BR interiors are manufactured of formed, plated aluminum or copper, and use Eaton's Type BR 1-inch (25.4 mm) wide circuit breaker. This design affords customers the most circuit flexibility as many of these interiors allow the installation of standard single- and two-pole breakers as well as duplex (two poles in a 1-inch (25.4 mm) space) or quadplex (four poles in a 2-inch (50.8 mm) space) breakers.

The stab rating of the BR interiors is 200 A maximum, meaning that the handle rating of the breakers that are mounted across from one another may not exceed 200 A.

The interiors are designed for either horizontal (single-row breaker mounting), or vertical (double-row breaker mounting). To comply with National Electrical Code (NEC) requirements, if mounted horizontally, when the breaker is ON, the handle should be in the UP position. When mounted vertically, the handle toggles from left to right, so this is not a concern.

## Standards and Certifications

### Class CTL

National Electrical Code Paragraph 384.15 requires branch circuit panelboards to be provided with physical means to prevent the installation of more overcurrent devices than that number of which the enclosure was designed, rated and approved. Class CTL Duplex, Quadplex and twin breakers (identified by a catalog number prefix BD, BQ, BQC and CHT) are equipped with a UL listed rejection tab over the line terminal. All OEM interiors have appropriately notched stabs to accept these rejection tab Class CTL breakers.

Duplex, Quadplex and twin breakers manufactured without the rejection tab (identified by a catalog number prefix BR, BRD and CHT) are available for replacement purposes in older interiors.

### Federal Specifications

All loadcenter enclosures meet Federal Specifications W-P-115b, Type 1, Class 2 requirements.

All 120/240 V breakers, both 1-inch (25.4 mm), 1/2-inch (12.7 mm) and 3/4-inch (19.1 mm) per pole meet the requirement of Federal Specifications W-C 375B/Gen Type 1.

### Canadian Standards Association Listing

All single-pole and two-pole, 120/240 V breakers, both 1-inch (25.4 mm), 1/2-inch (12.7 mm) and 3/4-inch (19.1 mm) per pole, 225 A maximum, are listed as Certified by the Canadian Standards Association, Guide No. 69-11.19, Class 1432, File 18328.

### Underwriters Laboratories Listing

All grounding bars manufactured comply with Underwriters Laboratories standards and are listed under Guide No. DHJR, File E31424, Volume W, Section 17.

All circuit breakers 10 A and larger comply with the Underwriters Laboratories "Standard for Branch Circuit and Service Circuit-Breakers" UL 489; Guide No. 60 10.2 File E31424, and "Requirements for Wire Connectors and Soldering Lugs," UL 486B, Guide No. 461 10-C File E7830.

All Eaton breakers where marked, are suitable for use with 60/75 °C rated wire, unless otherwise specified.

All devices comply with the 22 kAIC–10 kAIC UL series connected components File DKSY2 of the Recognized Components Index.

### Lighting and Appliance Panelboards

Lighting and appliance branch circuit panelboards are defined in NEC (Article 384) as "One having more than 10 percent of its overcurrent devices rated 30 A or less for which neutral connections are provided." Article 384 also limits the number of overcurrent devices (branch circuit poles) to a maximum of 42 in any one cabinet. When the 42 poles are exceeded, two or more separate panels are required.

For more details and engineering drawings, see BR.31.02.S.E.

Listed

## Product Selection

### Type CH Loadcenter Interior Assemblies—Copper Bus

| Ampere Rating | Maximum Number 1-Inch (24.5 mm) Spaces | Single Poles | UL File Reference | Main Terminal Size (Per Phase) | Standard Package Quantity | Catalog Number |
|---|---|---|---|---|---|---|
| **Single-Phase Single Row Breaker Mounting—120/240 Vac, Three-Wire** | | | | | | |
| 70 | 2 | 2 | E8741 | (1) #8–#2 AWG Cu/Al | 1 | **CH9MB270** |
| 125 | 2 | 2 | E8741 | (1) 2/0–#6 AWG Cu/Al | 20 | **CH2L125INT** |
| **Single-Phase Double Row Breaker Mounting—120/240 Vac, Three-Wire** | | | | | | |
| 125 | 4 | 4 | E8741 | (1) 2/0–#14 AWG Cu/Al | 20 | **CH4L125INT** |
| 125 | 8 | 8 | E8741 | (1) 2/0–#6 AWG Cu/Al | 20 | **CH8L125INT** |
| 125 | 12 | 12 | E8741 | (1) 2/0–#6 AWG Cu/Al | 20 | **CH12L125INT** |
| 125 | 16 | 16 | E8741 | (1) 2/0–#6 AWG Cu/Al | 20 | **CH16L125INT** |
| 200 | 12 | 12 | E8741 | (1) 300 kcmil–#4 AWG Cu/Al | 20 | **CH12L200INT** |
| 200 | 16 | 16 | E8741 | (1) 300 kcmil–#4 AWG Cu/Al | 10 | **CH16L200INT** |
| 225 | 24 | 24 | E8741 | (1) 300 kcmil–#4 AWG Cu/Al | 10 | **CH24L225INT** |
| 225 | 32 | 32 | E8741 | (1) 300 kcmil–#4 AWG Cu/Al | 10 | **CH32L225INT** |
| 225 | 42 | 42 | E8741 | (1) 300 kcmil–#4 AWG Cu/Al | 10 | **CH42L225INT** |
| **Three-Phase Double Row Breaker Mounting—208Y/120 Vac, Four-Wire—240 Vac, Three-Wire—120/240 Vac, Four-Wire Delta** | | | | | | |
| 125 | 12 | 12 | E8741 | (1) 2/0–#6 AWG Cu/Al | 10 | **CH12L3125INT** |
| 125 | 18 | 18 | E8741 | (1) 2/0–#6 AWG Cu/Al | 10 | **CH18L3125INT** |
| 125 | 24 | 24 | E8741 | (1) 2/0–#6 AWG Cu/Al | 10 | **CH24L3125INT** |
| 225 | 24 | 24 | E8741 | (1) 300 kcmil–#4 AWG Cu/Al | 10 | **CH24L3225INT** |
| 225 | 30 | 30 | E8741 | (1) 300 kcmil–#4 AWG Cu/Al | 10 | **CH30L3225INT** |
| 225 | 42 | 42 | E8741 | (1) 300 kcmil–#4 AWG Cu/Al | 10 | **CH42L3225INT** |

BR Loadcenter Interior Assembly

## Type BR Loadcenter Interior Assemblies—Aluminum Bus

| Ampere Rating | Maximum Number 1-Inch (24.5 mm) Spaces | Single Poles | UL File Reference | Main Terminal Size (Per Phase) | Standard Package Quantity | Catalog Number |
|---|---|---|---|---|---|---|
| **Single-Phase Single Row Breaker Mounting—120/240 Vac, Three-Wire** | | | | | | |
| 70 | 2 | 4 | E8741 | (1) #8–#2 AWG Cu/Al | 20 | **24INT70B** |
| 125 | 2 | 4 | E8741 | (1) 1/0–#14 AWG Cu<br>2/0–12 AWG Al | 20 | **24INT125B** |
| 125 | 6 | 12 | E52977 | (1) 2/0–#14 AWG Cu/Al | 20 | **612INT125SRB** |
| **Single-Phase Double Row Breaker Mounting—120/240 Vac, Three-Wire** | | | | | | |
| 125 | 4 | 8 | E8741 | (1) 2/0–#14 AWG Cu/Al | 20 | **48INT125B** |
| 125 | 6 | 12 | E8741 | (1) 2/0–#14 AWG Cu/Al | 20 | **612INT125B** |
| 125 | 8 | 16 | E8741 | (1) 2/0–#14 AWG Cu/Al | 20 | **816INT125B** |
| 125 | 12 | 12 | E52977 | (1) 2/0–#14 AWG Cu/Al | 20 | **1212INT125B** |
| 125 | 12 | 24 | E52977 | (1) 2/0–#14 AWG Cu/Al | 20 | **1224INT125B** |
| 125 | 16 | 24 | E52977 | (1) 2/0–#14 AWG Cu/Al | 20 | **1624INT125B** |
| 125 | 20 | 24 | E52977 | (1) 2/0–#14 AWG Cu/Al | 10 | **2024INT125B** |
| 125 | 24 | 24 | E52977 | (1) 2/0–#14 AWG Cu/Al | 10 | **2424INT125B** |
| 200 | 8 | 16 | E52977 | (1) 300 kcmil–#1 AWG Cu/Al | 20 | **816INT200B** |
| 200 | 12 | 24 | E52977 | (1) 300 kcmil–#1 AWG Cu/Al | 20 | **1224INT200B** |
| 200 | 30 | 40 | E52977 | (1) 300 kcmil–#1 AWG Cu/Al | 10 | **3040INT200B** |
| 225 | 42 | 42 | E52977 | (1) 300 kcmil–#1 AWG Cu/Al | 10 | **4242INT225B** |
| **Three-Phase Double Row Breaker Mounting—208Y/120 Vac, Four-Wire—240 Vac, Three-Wire—120/240 Vac, Four-Wire Delta** | | | | | | |
| 125 | 12 | 24 | E52977 | (1) 2/0–#8 AWG Cu/Al | 10 | **1224INT3125B** |
| 150 | 18 | 36 | E52977 | (1) 300 kcmil–#2 AWG Cu/Al | 10 | **1836INT3150B** |
| 150 | 24 | 42 | E52977 | (1) 300 kcmil–#2 AWG Cu/Al | 10 | **2442INT3150B** |
| 200 | 30 | 42 | E52977 | (1) 300 kcmil–#2 AWG Cu/Al | 10 | **3042INT3200B** |
| 225 | 42 | 42 | E52977 | (1) 300 kcmil–#2 AWG Cu/Al | 10 | **4242INT3225B** |

## Type BR Loadcenter Interior Assemblies—Copper Bus

| Ampere Rating | Maximum Number 1-Inch (24.5 mm) Spaces | Single Poles | UL File Reference | Main Terminal Size (Per Phase) | Standard Package Quantity | Catalog Number |
|---|---|---|---|---|---|---|
| **Single-Phase Double Row Breaker Mounting—120/240 Vac, Three-Wire** | | | | | | |
| 125 | 8 | 16 | E5297 | (1) 2/0–#14 AWG Cu/Al | 20 | **816INT125BC** |
| 125 | 12 | 12 | E5297 | (1) 2/0–#14 AWG Cu/Al | 20 | **1212INT125BC** |
| 200 | 12 | 24 | E5297 | (1) 300 kcmil–#1 AWG Cu/Al | 20 | **1224INT200BC** |
| **Three-Phase Double Row Breaker Mounting—208Y/120 Vac, Four-Wire—240 Vac, Three-Wire—120/240 Vac, Four-Wire Delta** | | | | | | |
| 125 | 12 | 24 | E52977 | (1) 2/0–#8 AWG Cu/Al | 10 | **1224INT3125BC** |
| 200 | 12 | 24 | E52977 | (1) 300 kcmil–#2 AWG Cu/Al | 10 | **1224INT3200BC** |

## Neutral Assemblies

| Ampere Rating | UL File Rating | Main Incoming Terminal Wire Size Range 60 °C or 75 °C | Number of Terminals #14–4 AWG Cu/Al | Number of Terminals #6–1/0 AWG Cu #6–2/0 AWG Al | Standard Package Quantity | Figure | Dimensions–Inches (mm) Overall Length A | Dimensions–Inches (mm) Mounting B | Catalog Number |
|---|---|---|---|---|---|---|---|---|---|
| 125 | E52977 | #6–1/0 AWG Cu<br>#6–2/0 AWG Al | 10 | — | 20 | 1 | 5.938 (150.83) | 5.400 (137.16) | **10NEU125B** |
| 125 | E52977 | #6–1/0 AWG Cu<br>#6–2/0 AWG Al | 17 | — | 20 | 1 | 8.388 (213.06) | 7.850 (199.40) | **17NEU125B** |
| 125 | E52977 | #6–1/0 AWG Cu<br>#6–2/0 AWG Al | 20 | — | 20 | 1 | 9.438 (239.73) | 8.900 (226.06) | **20NEU125B** |
| 225 | E52977 | #1–300 kcmil Cu/Al | 24 | 1 | 20 | 2 | 10.913 (277.19) | 10.300 (261.62) | **24NEU225B** |
| 225 | E52977 | #1–300 kcmil Cu/Al | 35 | 1 | 20 | 2 | 15.813 (401.65) | 15.200 (386.08) | **35NEU225B** |
| 125 | — | — | 4 | 2 | 1 | 3 | 2.266 (57.56) | 0.594 (15.09) | **BINA** |

**Figure 1**

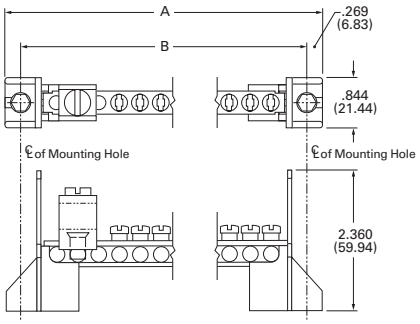


**Figure 2**

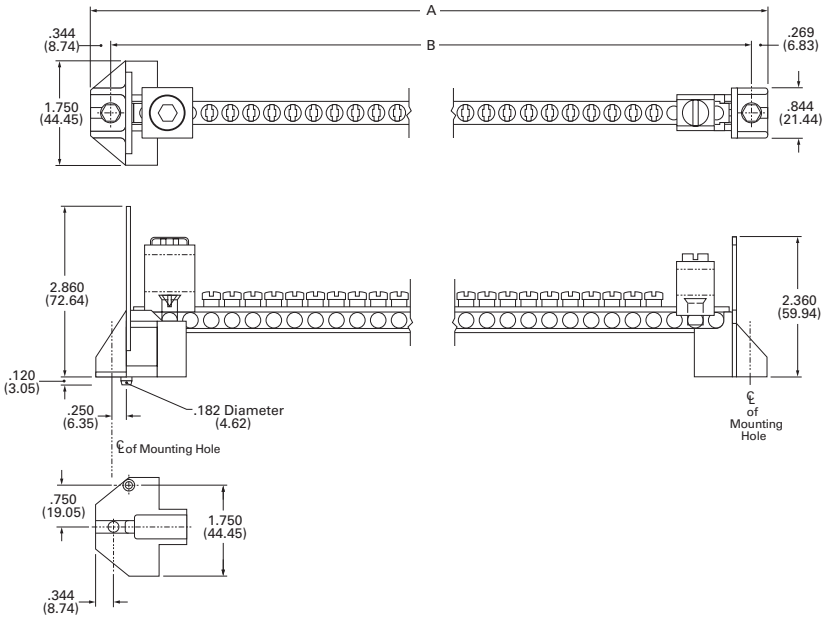


**Figure 3**

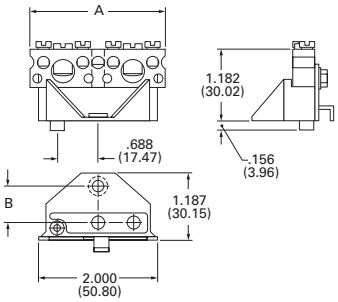

## Add-on Lugs for Neutral Assemblies

| Description | Wire Size Range Cu/Al 60 °C or 75 °C | Ordering Quantity ① | Catalog Number |
|---|---|---|---|
| Neutral/ground lug<br>Add-on neutral or ground lug | #2/0 maximum | 1 | **NL20** |
| | #3/0 maximum | 1 | **NL30** |
| | 300 kcmil maximum | 1 | **NL300** |

**GBK14**

**BRGBK39512**

## Ground Bar Kits

| Description (See Legend) | Length Inches (mm) | Ordering Quantity ① | Catalog Number |
|---|---|---|---|
| ●○○○○●○ | 2.54 (64.5) | 1 | **GBK5** ② |
| ●○○○○●○■ | 3.59 (91.2) | 1 | **GBK520** ② |
| ●○○○○●○○○○○○ | 4.29 (109.0) | 1 | **GBK10** ② |
| ●○○○○●○○○○○○■ | 5.34 (135.6) | 1 | **GBK1020** ② |
| ◒●◒◒◒⬓◒●◒⬓◒◒◒ | 4.61 (117.1) | 1 | **GBK13** ② |
| ●○○○○●○○○○○○○○○ | 5.69 (144.5) | 1 | **GBK14** ② |
| ●○○○○●○○○○○○○○○■ | 6.74 (171.2) | 1 | **GBK1420** ② |
| ●○○○○●○○○○○○○○○○○○○○○ | 8.14 (206.8) | 1 | **GBK21** ② |
| ●○○○○●○○○○○○○○○○○○○○○○■ | 9.19 (233.4) | 1 | **GBK2120** ② |
| ◒⬓◒●◒⬓◒◒◒⬓◒●◒⬓◒◒◒⬓◒ | 5.78 (146.8) | 1 | **BRGBK39512** ③④ |

**Ground Bar Legend**

○ (3) #14–10 Cu/Al or (1) #14–4 Cu/Al
■ (1) #6–2/0 Cu/Al
⬓ (1) #14–1/0 Cu/Al or (3) #14–10 Cu/Al
◒ (1) #14–6 Cu/Al or (2) #14–12 Cu/Al
● Mounting Hole

***Notes***

① Must be purchased in multiples of ordering quantities indicated.
② Distance between mounting holes is 1.75 inches (44.5 mm).
③ For single- and three-phase 400 and 600 A applications.
④ Distance between mounting holes is 2.34 inches (59.5 mm).

Enclosed Breakers

## Contents


| *Description* | *Page* |
|---|---|
| Product Selection | **V1-T1-95** |
| Dimensions | **V1-T1-95** |


## Product Overview

Eaton enclosed breakers offer all the advantages of circuit breakers packed in an enclosure for 240 Vac applications and include a wide range of accessories.

## Product Description

- 100–225 A, 240 Vac maximum
- NEMA 1 general purpose—surface or flush mounting
- NEMA 3R rainproof surface mounting

## Standards and Certifications

- UL 489
- CSA 22.2
- NEMA 250

Listed

## Product Selection

***Single-Phase and Three-Phase Circuit Breaker Enclosures—10/25 kAIC***

**ECC225R**

### Type ECC Circuit Breaker Enclosure—Order Type CC Circuit Breaker Separately

| Main Ampere Rating | Unit Enclosure Type | Mounting Type | Circuit Breaker Type | Wire Size Range Cu/Al 60 °C or 75 °C | Catalog Number |
|---|---|---|---|---|---|
| **Single- and Three-Phase—240 Vac Maximum** | | | | | |
| 100 | Indoor | Surface | CCVH factory installed (25 kAIC) | #4–4/0 | **ECCVH100S** ①②③ |
| 150 | Indoor | Surface | CCVH factory installed (25 kAIC) | #4–4/0 | **ECCVH150S** ①②③ |
| 200 | Indoor | Surface | CCVH factory installed (25 kAIC) | #2/0–300 kcmil | **ECCVH200S** ①②③ |
| 100 | Outdoor | — | CCVH factory installed (25 kAIC) | #4–4/0 | **ECCVH100R** ①②④ |
| 150 | Outdoor | — | CCVH factory installed (25 kAIC) | #4–4/0 | **ECCVH150R** ①②④ |
| 200 | Outdoor | — | CCVH factory installed (25 kAIC) | #2/0–300 kcmil | **ECCVH200R** ①②④ |
| 225 | Indoor | Flush | CC/CCV/CCH | ⑥ | **ECC225F** ②③⑤ |
| 225 | Indoor | Surface | CC/CCV/CCH | ⑥ | **ECC225S** ②③⑤ |
| 225 | Outdoor | — | CC/CCV/CCH | ⑥ | **ECC225R** ②③④⑤ |

**CCV2200**

### Circuit Breaker 240 Vac for Use in Type ECC Enclosures

| Ampere Rating | Wire Size Range Cu/Al 60 °C or 75 °C for Line Terminals | Type CCV and CC 10 kAIC Catalog Number | Type CCVH/CCH 25 kAIC Catalog Number |
|---|---|---|---|
| **Two-Pole** | | | |
| 60 | #4–4/0 | **CCV2060** | **CCVH2060** |
| 70 | | **CCV2070** | **CCVH2070** |
| 80 | | **CCV2080** | **CCVH2080** |
| 90 | | **CCV2090** | **CCVH2090** |
| 100 | | **CCV2100** | **CCVH2100** |
| 125 | | **CCV2125** | **CCVH2125** |
| 150 | | **CCV2150** | **CCVH2150** |
| 175 | #2/0–300 kcmil | **CCV2175** | **CCVH2175** |
| 200 | | **CCV2200** | **CCVH2200** |
| 225 | | **CCV2225** | **CCVH2225** |
| **Three-Pole** | | | |
| 100 | #4–4/0 | **CC3100** | **CCH3100** |
| 125 | | **CC3125** | **CCH3125** |
| 150 | | **CC3150** | **CCH3150** |
| 175 | #2/0–300 kcmil | **CC3175** | **CCH3175** |
| 200 | | **CC3200** | **CCH3200** |
| 225 | | **CC3225** | **CCH3225** |

### Shunt Trips and Auxiliary Contacts

| Description Type | Volts | Catalog Number Suffix Adder ⑦ |
|---|---|---|
| **Shunt Trip** | | |
| CC | 12 DC | **SR12** |
| CC | 24 DC | **SR24** |
| CC | 120 AC | **SR01** |
| CC | 208 AC | **SR08** |
| CC | 240 AC | **SR02** |
| CCV | 48–127 AC/48–60 DC | **SR01** |
| CCV | 9–24 AC/12–24 DC | **SR02** |
| CCV | 208–380 AC/100–127 DC | **SR04** |
| **Auxiliary Contact** | | |
| CC 1NO and 1NC | — | **AL1** |

## Dimensions

Approximate Dimensions in Inches (mm)

### ECC Unit Enclosures—NEMA Type 1 Indoor

| Height | Width | Depth |
|---|---|---|
| 23.25 (590.6) | 8.88 (225.4) | 4.50 (114.3) |

### ECC Unit Enclosures—NEMA Type 3R Outdoor

| Height | Width | Depth |
|---|---|---|
| 23.68 (601.7) | 9.31 (236.5) | 5.44 (138.1) |

***Notes***

① Factory installed CCVH breaker.
② Approved for service entrance.
③ One ground lug accepting (1) #14–#2 is factory installed. Also, there are pre-drilled holes to accept a GBK5 ground bar.
④ Rainproof panels are furnished with hub closures plates. For rainproof hubs, refer to **Page V1-T1-66**.
⑤ Order circuit breaker separately.
⑥ Wire size is determined by the circuit breaker installed in enclosure.
⑦ Add suffix indicated to end of breaker catalog number.

Classified Breakers

## Contents


| *Description* | *Page* |
|---|---|
| Product Selection | **V1-T1-97** |
| Accessories | **V1-T1-99** |
| Technical Data | **V1-T1-99** |
| Wiring Diagrams | **V1-T1-100** |


## Product Description

Eaton UL classified Replacement Circuit Breakers are available in both 3/4-inch Type CHQ and 1-inch Type CL, single- and two-pole configurations. These breakers are classified as direct replacements by Underwriters Laboratories. In addition to a UL listing, they also come with a 15-year warranty.

### Specified vs. UL Classified

Specified breakers are listed by the manufacturer of the panelboard for use in a particular panel. This doesn't mean that the panelboard manufacturer produced the specified breaker; it merely means that the panelboard manufacturer has tested the breaker in the panel. In fact, through the years, Eaton has manufactured thousands of breakers for other panelboard manufacturers.

UL classified breakers are produced by one manufacturer for use in place of the breakers specified on the panelboard. Like specified breakers, UL classified breakers have been tested in the panels for which they are approved.

### Testing

Classified breakers are tested extensively in numerous General Electric®, Siemens®, Murray®, Thomas & Betts®, Square D®, and Crouse-Hinds® panels. The tests are conducted with witnesses from Underwriters Laboratories Inc. and involve short-circuit, temperature, and insertion/withdrawal applications. This level of testing ensures that the breakers meet identified standards and have been found suitable by UL for the specified purpose.

### Understanding Classified Breaker Terminology

***Definitions***

Specified circuit breaker—each manufacturer lists the brands of circuit breakers that can be used in their panelboards. Often, manufacturers will not list competitors as specified, even though they are suitable replacements.

Classified circuit breaker—a breaker that is considered suitable, by a qualified third-party organization, for use in another manufacturer's panelboard.

Listed breaker—the listing of a circuit breaker is by an independent third party. Eaton classified breakers are listed by UL.

Labeled breaker—a breaker with a label affixed by an independent third party.

## Product Selection

### Type CHQ Replacement Breakers for Square D Type QO Loadcenters

***10 kAIC, 120 and 120/240 Vac***

**CHQ120 CHQ230**

#### Type CHQ Classified Breakers 3/4-Inch (19.1 mm) per Pole 120 or 120/240 Vac, 10 kAIC

| Ampere Rating | Wire Size Range Cu/Al 60 °C or 75 °C | Single-Pole 120/240 Vac Requires One 3/4-Inch (19.1 mm) Space 10 per Shelf Carton Catalog Number | Two-Pole 120/240 Vac Common Trip Requires Two 3/4-Inch (19.1 mm) Spaces 5 per Shelf Carton Catalog Number |
|---|---|---|---|
| 15 | (1) #14–8<br>(2) #14–10 | CHQ115 | CHQ215 |
| 20 | | CHQ120 | CHQ220 |
| 25 | | CHQ125 | CHQ225 |
| 30 | | CHQ130 | CHQ230 |
| 35 | | CHQ135 | CHQ235 |
| 40 | | CHQ140 | CHQ240 |
| 45 | | CHQ145 | CHQ245 |
| 50 | | CHQ150 | CHQ250 |
| 60 | | — | CHQ260 |

### Type CHQ Ground Fault and Arc Fault Replacement Breakers for Square D Type QO Loadcenters

***10 kAIC, 120 and 120/240 Vac***

**CHQ115GF CHQ220GF**

#### Type CHQ Ground Fault Breakers—5 Milliampere—3/4-Inch (19.1 mm) per Pole, 10 kAIC

| Ampere Rating | Wire Size Range Cu/Al 60 °C or 75 °C | Single-Pole 120 Vac Requires One 3/4-Inch (19.1 mm) Space 10 per Shelf Carton Catalog Number | Two-Pole 120/240 Vac Common Trip Requires Two 3/4-Inch (19.1 mm) Spaces 5 per Shelf Carton Catalog Number |
|---|---|---|---|
| 15 | (1) #14–8<br>(2) #14–10 | CHQ115GF | CHQ215GF |
| 20 | | CHQ120GF | CHQ220GF |
| 25 | | CHQ125GF | CHQ225GF |
| 30 | | CHQ130GF | CHQ230GF |
| 35 | | — | CHQ235GF |
| 40 | | — | CHQ240GF |
| 45 | | — | CHQ245GF |
| 50 | | — | CHQ250GF |

#### Type CHQ Surge Arrester

| Catalog Number |
|---|
| CHQSA |

1

## Type CL Replacement Breakers for Square D HOMELINE, General Electric, Crouse-Hinds, Thomas & Betts, Murray and ITE®/Siemens Loadcenters

CL_

### Type CL Breakers, 1-Inch (25.4 mm) per Pole, 10 kAIC

| Ampere Rating | Wire Size Range Cu/Al 60 °C or 75 °C | Single-Pole 120/240 V Requires One 1-Inch (25.4 mm) Space 10 per Shelf Carton Catalog Number | Two-Pole 120/240 V Common Trip Requires Two 1-Inch (25.4 mm) Spaces 5 per Shelf Carton Catalog Number |
|---|---|---|---|
| 15 | #14–4 | **CL115** | **CL215** |
| 20 | #14–4 | **CL120** | **CL220** |
| 25 | #14–4 | **CL125** | **CL225** |
| 30 | #14–4 | **CL130** | **CL230** |
| 35 | #14–4 | **CL135** | **CL235** |
| 40 | #14–4 | **CL140** | **CL240** |
| 45 | #14–4 | **CL145** | **CL245** |
| 50 | #14–4 | **CL150** | **CL250** |

CL_AF

### Type CL Classified Arc and Ground Fault Breakers (5 Milliampere), 1-Inch (25.4 mm) per Pole, 10 kAIC

| Ampere Rating | Wire Size Range Cu/Al 60 °C or 75 °C | Single-Pole 120/240 V Requires One 1-Inch (25.4 mm) Space 1 per Shelf Carton Catalog Number |
|---|---|---|
| **Arc Fault Breakers** | | |
| 15 | #14–4 | **CL115AF** |
| 20 | #14–4 | **CL115CAF** |
| 20 | #14–4 | **CL120AF** |
| 20 | #14–4 | **CL120CAF** |
| **Ground Fault Breakers** | | |
| 15 | #14–4 | **CL115GF** |
| 20 | #14–4 | **CL120GF** |
| 30 | #14–4 | **CL130GF** |

CLR_

### Type CL Classified Latching Remote Control Smart Breakers™, 1-Inch (25.4 mm) per Pole, 10 kAIC

| Ampere Rating | Wire Size Range Cu/Al 60 °C or 75 °C | Single-Pole 120 V Requires One 1-Inch (25.4 mm) Space 10 per Shelf Carton Catalog Number | Two-Pole 120/240 V Common Trip Requires Two 1-Inch (25.4 mm) Spaces 5 per Shelf Carton Catalog Number |
|---|---|---|---|
| 15 | (2) #14–10 | **CLRP115** | **CLRP215** |
| 20 | (2) #14–10 | **CLRP120** | **CLRP220** |
| 25 | (1) #8–6 | **CLRP125** | **CLRP225** |
| 30 | (1) #8–6 | **CLRP130** | **CLRP230** |

## Accessories

### CHQ Breaker Accessories

| Description | Catalog Number |
|---|---|
| Breaker handle lock | **CHLO** |

## Technical Data

### Arc Fault Application Notes

An arc fault circuit interrupter is a device intended to provide protection from the effects of arc faults by recognizing characteristics unique to arcing and by functioning to de-energize the circuit when the arc fault is detected. As of January 1, 2002, the National Electrical Code (NEC) requires all branch circuits that supply 125 V, single-phase, 15 and 20 A receptacle outlets installed in dwelling unit bedrooms shall be protected by an arc fault circuit interrupter(s). This includes ceiling lighting (recessed, ceiling fans, etc.) as well as smoke detectors and all other bedroom outlets. The 2005 NEC introduced the application of the Combination Type AFCI for bedroom circuits required as of January 1, 2008. The 2008 NEC expands this application to other living areas.

### Ground Fault Application Notes

Single-pole GFCBs are designed for use in two-wire, 120 Vac circuits. Drawing on **Page V1-T1-100** shows a typical wiring configuration.

Two-pole GFCBs are designed for use in three-wire, 120/240 Vac circuits, 120 Vac multiwire circuits employing common, neutral and two-wire, 240 Vac circuits obtained from a 120/240 Vac source.

Drawings on **Page V1-T1-100** illustrate typical wiring configurations for 120/240 Vac multiwire circuits.

Drawing on **Page V1-T1-100** depicts a 240 Vac, two-wire circuit. Note the "panel neutral" conductor connects to the neutral bar, even though the neutral is not included in the load circuit. This connection is necessary to supply a 120 Vac power source to the ground fault sensing circuit.

The figures are shown with a 120/240 Vac, single-phase, three-wire power source, ut are also applicable to a 120/208 Vac, three-phase, four-wire power supply. For all figures, the electrical operation of the GFCB is not affected by the equipment ground.

1

## Wiring Diagrams

### Single-Pole 120 V Load Application Sourced by 120/240 Vac

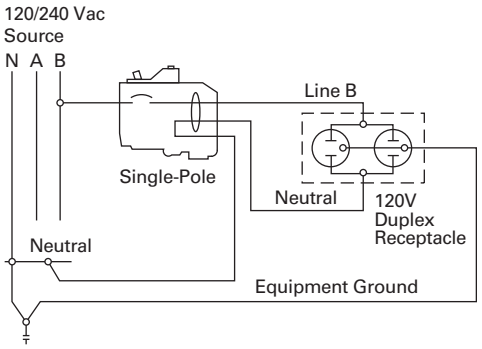


### Two-Pole 240 V Load Application Sourced by 120/240 Vac

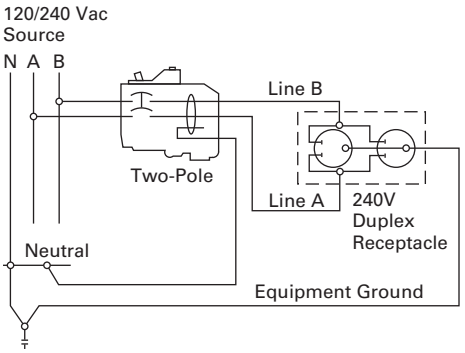


### Two-Pole Shared Neutral with Multi-Duplex Receptacle Application

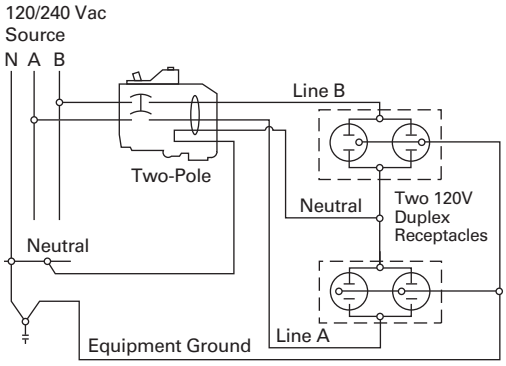


### Two-Pole Shared Neutral with Duplex Receptacle Application

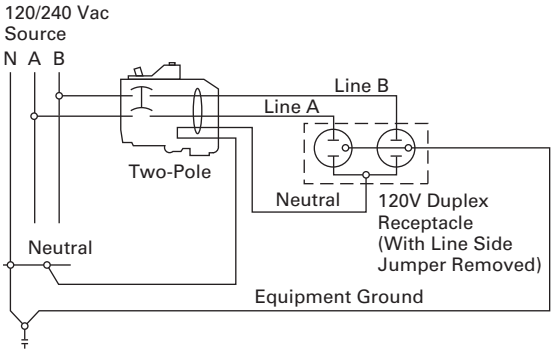


### Single-Pole 120 V Duplex Receptacle Application

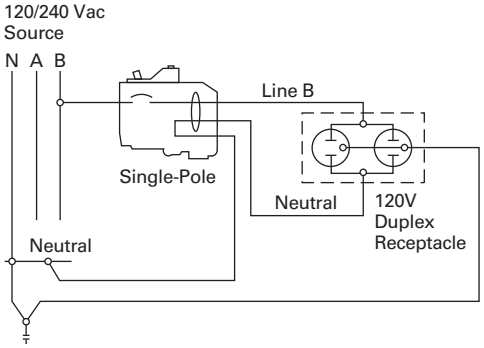


### Two-Pole 120 V Duplex Receptacle Application

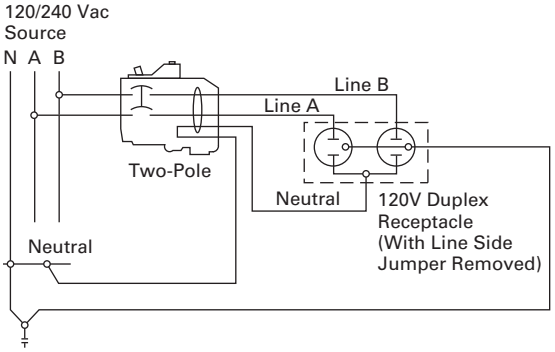


### Two-Pole 120 V Multi-Duplex Receptacle Application

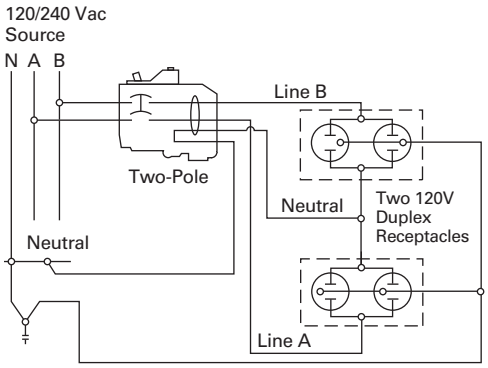


### Two-Pole 240 V Duplex Receptacle Application

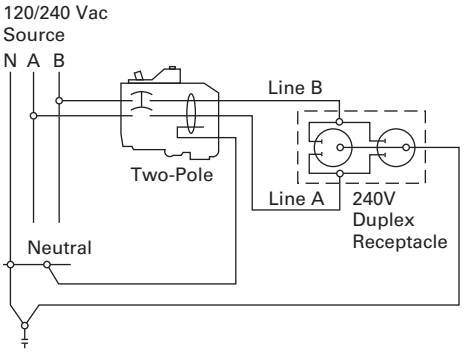

Surge Protection Devices

## 2.1 Surge Protection Devices and Lightning Arresters


Product Description . . . . . V1-T2-2
Application Description . . . . . V1-T2-2
Standards and Certifications . . . . . V1-T2-3
Product Selection . . . . . V1-T2-4




Learn Online

Surge Protection Devices

## Contents


| *Description* | *Page* |
|---|---|
| Surge Protection Devices and Lightning Arresters | |
| Standards and Certifications . . . . . | **V1-T2-3** |
| Product Selection . . . . . | **V1-T2-4** |


## Product Description

Due to the evolution of electronics and microprocessors in the home, there is a continuous challenge to provide quality (clean) power for electronic loads such as appliances, computers/home office and entertainment systems. Surges caused by lightning, utility grid switching and other sources travel on current carrying conductors throughout the home, which can affect and destroy sensitive electronic loads.

Eaton offers a comprehensive family of surge products for use at service entrances. These products can help protect sensitive electronics against the damaging effects of surges.

## Application Description

### Two-Stage Protection

Two stages of surge suppression are recommended to provide the best protection for electronic equipment. Two-stage surge suppression should be provided for all cables entering a home, including power, Internet, coaxial and telephone.

### Service Entrance Surge Protection

Eaton's service entrance surge protection units provide premier surge protection for AC power at the service entrance. These products provide protection for residential electrical equipment by reducing power surges to an acceptable level for surge strips to handle at the point of use.

#### *UL 1449 3rd Edition Type 1 and Type 2 Surge Protection*

- **Type 1 Surge Protective Device (SPD)**—Permanently connected Type 1 SPDs are intended for installation between the secondary of the service transformer and the line side of the service equipment overcurrent device, as well as the load side, including watt-hour meter socket enclosures, and are intended to be installed without an external overcurrent protective device. Type 1 devices are dual-rated for Type 2 applications as well, providing the highest ratings available for installation at the service entrance
  - Eaton's CHSPT1 products provide Type 1 surge protection in accordance with UL® 1449 3rd Edition. These units can be universally mounted outside any manufacturer's primary service equipment
- **Type 2 Surge Protective Device**—Permanently connected Type 2 SPDs are intended for installation on the load side of the service equipment overcurrent device, including SPDs located at the branch panel
  - CHSPT2 products provide Type 2 surge protection in accordance with UL 1449 3rd Edition. These units can be mounted outside of any manufacturer's loadcenter or inside an Eaton Surge/Surge Ready loadcenter. Eaton also offers accessories to the CHSPT2 line for telephone and cable protection
- **Factory-Installed Surge Protection**—Eaton's loadcenters with factory-installed surge protection include a CHSPT2ULTRA and a two-pole 50 A circuit breaker. These loadcenters increase the effectiveness of surge protection due to reduced lead length. A modified deadfront allows for easy viewing of indicating lights for status indication

*Surge Panel*

- **Surge Ready Loadcenter**—The Surge Ready loadcenter provides a mounting provision for the CHSPT2ULTRA. This loadcenter has a modified deadfront to allow for viewing of indicating lights

## Two-Stage Protection

① CHSP installed at the service entrance panel.
② SurgeTrap™ surge traps and strips located where sensitive electronics are plugged in.

### *Plug-On Surge Protection*

- **Type CHSA**—For use on single-phase 120/240 Vac systems. The CHSA easily plugs into a single-phase Type CH loadcenter and occupies two 3/4-inch (19.1 mm) pole spaces, similar to a two-pole Type CH breaker. When installed properly, it provides surge protection for the entire loadcenter. If internal components are damaged, the CHSA LED visual indicators will signal the need for a replacement. This device is suitable for service entry locations when installed in accordance with NEC® guidelines
- **Type BRSURGE**—For use on single-phase 120/240 Vac systems. This easily plugs into a single-phase Type BR loadcenter and occupies two 1-inch (25.4 mm) pole spaces similar to a two-pole Type BR breaker. When installed properly, it provides surge protection for the entire loadcenter. If internal components are damaged, the BRSURGE LED visual indicators will signal the need for replacement. This device is suitable for service entry locations when installed in accordance with NEC guidelines. This unit is also classified by UL for use in select GE, ITE/Siemens and Crouse-Hinds Panels (refer to Pub No. 5655B65H01 for additional details)
- **Type CHQSA**—For use on single-phase, 120/240 Vac systems. This unit easily plugs into a Square D single-phase loadcenter Type QO® and occupies two 3/4-inch (19.1 mm) pole spaces similar to a two-pole Type QO breaker. When installed properly, it provides surge protection for the entire loadcenter. If internal components are damaged, the CHQSA LED visual indicators will signal the need for a replacement. This device is suitable for service entrance locations installed in accordance with NEC guidelines. This device is UL classified to be used in place of Square D Type QO surge arresters (refer to Pub-23974)
- **Type BRSURGECSA**—For use on single-phase 120/240 Vac systems. This easily plugs into a single-phase Type BR loadcenter and occupies two 1-inch (25.4 mm) pole spaces similar to a two-pole Type BR breaker. When installed properly, it provides surge protection for the entire loadcenter. If internal components are damaged, the BRSURGECSA LED visual indicators will signal the need for replacement. This device is suitable for service entry locations when installed in accordance with Canadian Electrical Code. This device is CSA® listed to be used in a Type BR loadcenter

### Type 3 Point-of-Use Surge Protection

Point-of-use surge protectors such as surge receptacles are installed within 30 ft of conductor length from the service panel and are designed to offer premium surge protection for specific electronics while providing innovative features to enhance user convenience.

## Standards and Certifications

- CHSPT1 Products: UL 1449 3rd Edition Type 1
- CHSPT2 Products: UL/cUL® 1449 3rd Edition Type 2
- CHSPTELE: UL 497A, cUL
- CHSPCABLE: UL 6500, cUL
- NEMA® 3R Enclosure for CHSPTELE and CHSPCABLE: UL 50 Enclosure
- BRSURGE, CHSA, BRSURGECSA, CHQSA: UL 1449 3rd Edition plug-in type; Type 2 SPD

## Product Selection



### SPD Type 1 CHSP Service Entrance Surge Protection—UL 1449 3rd Edition

***Product Features***

- Commercial grade AC power protection
- Type 1 surge device for installation before or after the main service disconnect
- Convenient mounting options—universal fit to any manufacturer's equipment
- Clear, visible LED indication displaying status of the surge protector

| | Catalog Number | Connection | Enclosure | Voltage | Phase | Frequency (Hz) | MCOV ① | VPR ② | $I_n$ ③ | SCCR ④ | Surge Current Capacity, Per Phase Rating ⑤ |
|---|---|---|---|---|---|---|---|---|---|---|---|
| CHSPT1ULTRA | CHSPT1ULTRA | Permanently connected device installed before or after the service disconnect overcurrent device. | NEMA 4 | 100/200 Vac, 110/220 Vac, 120/240 Vac | Single | 50/60 | 300 V L–L, 150 V L–N | 1000 V L–L, 600 V L–N | 20 kA | 200 kA | 50 kA |
| CHSPT1MAX | CHSPT1MAX | Permanently connected device installed before or after the service disconnect overcurrent device. | NEMA 4 | 100/200 Vac, 110/220 Vac, 120/240 Vac | Single | 50/60 | 300 V L–L, 150 V L–N | 1000 V L–L, 600 V L–N | 20 kA | 200 kA | 45 kA |
| CHSPT1MICRO | CHSPT1MICRO | Permanently connected device installed before or after the service disconnect overcurrent device. | NEMA 4 | 100/200 Vac, 110/220 Vac, 120/240 Vac | Single | 50/60 | 300 V L–L, 150 V L–N | 1000 V L–L, 600 V L–N | 20 kA | 200 kA | 36 kA |
| CHSPT1-208Y | CHSPT1-208Y | Permanently connected device installed before or after the service disconnect overcurrent device. | NEMA 4 | 120/208 Vac | Three-phase wye | 50/60 | 300 V L–L, 150 V L–N | 1000 V L–L, 600 V L–N | 20 kA | 200 kA | 50 kA |

### Accessory for Type 1 CHSP Service Entrance Surge Protection

| | Catalog Number | Description |
|---|---|---|
| SP1DINRAILKIT | SP1DINRAILKIT | Mounting kit for wall or DIN rail installation. |

***Notes***

① MCOV: Maximum Continuous Operating Voltage that may be applied to the device per mode.
② VPR: Voltage Protection Rating is the measured limiting voltage after a surge event.
③ $I_n$: Nominal Discharge Current is the current that the device can withstand for 15 impulses.
④ SCCR: The amount of current the product can withstand under short-circuit conditions.
⑤ Surge Current Capacity: The maximum one time surge current rating per phase.

For warranty details, go to www.eaton.com/surgetrap.

## SPD Type 2 CHSP Service Entrance Surge Protection—UL 1449 3rd Edition; cUL

***Product Features***

- AC power protection
- Universally connects to any manufacturer's loadcenter (breaker box)
- Quick connect design—easy to mount telephone and cable protection modules
- LED status indication

| | Catalog Number | Connection | Enclosure | Voltage | Phase | Frequency (Hz) | MCOV ① | VPR ② | $I_n$ ③ | SCCR ④ | Surge Current Capacity, Per Phase Rating ⑤ |
|---|---|---|---|---|---|---|---|---|---|---|---|
| CHSPT2ULTRA | **CHSPT2ULTRA** | Can be attached to the outside of any manufacturer's loadcenter (breaker box). This product should be connected on the load side of the loadcenter main service disconnect through a dedicated circuit breaker (follow NEC Guidelines). | NEMA 4 | 120/240 Vac rated line voltage | Single | 60 | 150 V L–N, 300 V L–L | 600 V L–N, 1000 V L–L, 800 V N–G, 600 V L–G | 20 kA ⑥ | 22 kA | **108 kA** (L1–N 54 kA, L1–G 54 kA, L2-N 54 kA, L2–G 54 kA) |
| CHSPT2MAX | **CHSPT2MAX** | Can be attached to the outside of any manufacturer's loadcenter (breaker box). This product should be connected on the load side of the loadcenter main service disconnect through a dedicated circuit breaker (follow NEC Guidelines). | NEMA 4 | 120/240 Vac rated line voltage | Single | 60 | 150 V L–N, 300 V L–L | 600 V L–N, 1000 V L–L, 800 V N–G, 600 V L–G | 10 kA | 22 kA | **72 kA** (L1–N 36 kA, L1–G 36 kA, L2–N 36 kA, L2–G 36 kA) |
| CHSPT2MICRO | **CHSPT2MICRO** | Can be attached to the outside of any manufacturer's loadcenter (breaker box). This product should be connected on the load side of the loadcenter main service disconnect through a dedicated circuit breaker (follow NEC Guidelines). | NEMA 4 | 120/240 Vac rated line voltage | Single | 60 | 150 V L–N, 300 V L–L | 600 V L–N, 1000 V L–L, 800 V N–G, 600 V L–G | 5 kA | 22 kA | **36 kA** (L1–N 18 kA, L1–G 18 kA, L2–N 18 kA, L2–G 18 kA) |

***Notes***

① MCOV: Maximum Continuous Operating Voltage that may be applied to the device per mode.
② VPR: Voltage Protection Rating is the measured limiting voltage after a surge event.
③ $I_n$: Nominal Discharge Current is the current that the device can withstand for 15 impulses.
④ SCCR: The amount of current the product can withstand under short-circuit conditions.
⑤ Surge Current Capacity: The maximum one time surge current rating per phase.
⑥ When used with a 50 A two-pole circuit breaker, 10 kA when used with a 15 A two-pole circuit breaker.

For warranty details, go to www.eaton.com/surgetrap.

## Accessories for CHSP Type 2 Service Entrance Protection

| | Catalog Number | Description | Installation | Surge Current Capacity | DC Breakdown Voltage | Voltage |
|---|---|---|---|---|---|---|
| **CHSPCABLE** | **CHSPCABLE** | Quick Connect design—add additional telephone and AC protection modules; protects two quad shield cables; bi-directional | Indoor installation; or rain-tight when used with recommended enclosure | 10 kA per line | 145 V | |
| **CHSPTELE** | **CHSPTELE** | Quick Connect design—add additional AC and cable protection modules; protects four telephone lines | Indoor installation; or rain-tight when used with recommended enclosure | 20 kA per line | 230 V | Ring 90–120 Vac/ Tone 48–52 Vdc |
| **CHSPT23PACK** | **CHSPT23PACK** | 3-Pack: CHSPT2ULTRA+CHSPTELE+CHSPCABLE; Surge protection for AC power, telephone and cable—see individual product features | | See individual product ratings | | |
| **CHSP3RTELCABLE** | **CHSP3RTELCABLE** | Raintight enclosure for CHSPTELE and CHSPCABLE; top or bottom feed; enclosure only, surge not included; accommodates up to two devices | | | | |
| **CHSPFMKIT** | **CHSPFMKIT** | Flushmount kit for: CHSPT2ULTRA, CHSPT2MAX, CHSPT2MICRO, CHSPTELE, CHSPCABLE | | | | |
| **MSEGR2** | **MSEGR2** | Outdoor communication grounding device; meets 2008 NEC requirements for intersystem bonding termination | | | | |

***Note***

For warranty details, go to www.eaton.com/surgetrap.

## Type BR and CH Surge Breakers

***Product Description***

The CH and BR surge breaker is designed to provide premier AC power surge protection for sensitive electronics and appliances from the damaging effects of electrical surges. In addition, the surge breaker is a functional two-pole thermal magnetic breaker.

The combination of circuit protection and surge protection provides extra flexibility and space saving in the loadcenter.

***Product Features***

- Complete home surge protection for all circuits plus a functional two-pole thermal magnetic breaker
- LEDs provide protection status
- Plug-on connection to the busbar provides superior protection and easy installation for new construction or renovation
- Eliminates the potential for incorrect installation of externally mounted surge devices—(longer "lead" lengths can reduce protection levels)

**Type CH Surge Breakers**

**Type BR Surge Breakers**

| Catalog Number ① | Poles | Ampere Rating | Voltage | Phase | Frequency (Hz) | MCOV ② | VPR ③ | $I_n$ ④ | SCCR ⑤ | Surge Current Capacity, Per Phase Rating ⑥ |
|---|---|---|---|---|---|---|---|---|---|---|
| **Type CH Surge Breakers** | | | | | | | | | | |
| **CH230SUR** | Two-pole 10 kAIC | 30 | 120/240 Vac | Single | 50/60 | 150 V L–N, 300 V L–L | 600 V L–N, 1000 V L–L | 10 kA | 10 kA | 36 kA (L1–N 36 kA, L2–N 36 kA) |
| **CH250SUR** | | 50 | 120/240 Vac | Single | 50/60 | 150 V L–N, 300 V L–L | 600 V L–N, 1000 V L–L | 10 kA | 10 kA | 36 kA (L1–N 36 kA, L2–N 36 kA) |
| **Type BR Surge Breakers** | | | | | | | | | | |
| **BR230SUR** | Two-pole 10 kAIC | 30 | 120/240 Vac | Single | 50/60 | 150 V L–N, 300 V L–L | 600 V L–N, 1000 V L–L | 10 kA | 10 kA | 36 kA (L1–N 36 kA, L2–N 36 kA) |
| **BR250SUR** | | 50 | 120/240 Vac | Single | 50/60 | 150 V L–N, 300 V L–L | 600 V L–N, 1000 V L–L | 10 kA | 10 kA | 36 kA (L1–N 36 kA, L2–N 36 kA) |

***Notes***

① Clamshell packaging available with CS modification code on the end of catalog number.
② MCOV: Maximum Continuous Operating Voltage that may be applied to the device per mode.
③ VPR: Voltage Protection Rating is the measured limiting voltage after a surge event.
④ $I_n$: Nominal Discharge Current is the current that the device can withstand for 15 impulses.
⑤ SCCR: The amount of current the product can withstand under short-circuit conditions.
⑥ Surge Current Capacity: The maximum one time surge current rating per phase.

## Surge Protection Receptacles with LED Indicators and Audible Alarm



### *Product Description*

- Two-pole, three-wire grounding
- 15 A, 125 Vac; 20 A, 125 Vac; NEMA 5-15R and 5-20R

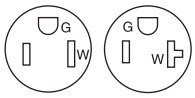


5-15R 5-20R

ArrowLink option available. Add "M" suffix to standard catalog number (example 8300WS, 8300WSM).

Build-to-spec customizable devices.

5362_S

IG5350_S

IG1208

1209

35M2S

| Catalog Number | Color Suffix | Ampere Rating | Voltage | NEMA | Description | | |
|---|---|---|---|---|---|---|---|
| **Receptacles with Audible Alarm and LED Indicators, Back and Side Wire** | | | | | | | |
| **5262__S** | BL, GY, V, W | 15 | 125 Vac | 5-15R | Surge duplex receptacle | ■ | ■ |
| **IG5262__S** | BL, GY, RN, V, W | | | | IG Surge duplex receptacle | ■ | ■ |
| **5362__S** | BL, GY, V, W | 20 | 125 Vac | 5-20R | Surge duplex receptacle | ■ | ■ |
| **IG5362__S** | BL, GY, RN, V, W | | | | IG Surge duplex receptacle | ■ | ■ |
| 560 Joules, max. surge current—18 kA per mode | | | | | | | |
| **Receptacles with LED Indicators, Back and Side Wire** | | | | | | | |
| **5250__S** | BL, GY, V, W | 15 | 125 Vac | 5-15R | Surge duplex receptacle | ■ | ■ |
| **IG5250__S** | BL, GY, RN, V, W | | | | IG Surge duplex receptacle | ■ | ■ |
| **5350__S** | BL, GY, V, W | 20 | 125 Vac | 5-20R | Surge duplex receptacle | ■ | ■ |
| **IG5350__S** | BL, GY, RN, V, W | | | | IG Surge duplex receptacle | ■ | ■ |
| 840 Joules, max. surge current—18 kA per mode | | | | | | | |
| **Receptacles with Audible Alarm** | | | | | | | |
| **1208__** | V, W | 15 | 125 Vac | 5-15R | Surge duplex receptacle | ■ | ■ |
| **IG1208__** | V, W | | | | IG Surge duplex receptacle | ■ | ■ |
| **1210__** | BL, V, W | 20 | 125 vac | 5-20R | Surge duplex receptacle | ■ | ■ |
| **IG1210__** | V, W | | | | IG Surge duplex receptacle | ■ | ■ |
| 340 Joules, max. surge current—12 kA per mode | | | | | | | |

| Catalog Number | Color Suffix | Ampere Rating | Voltage | Description |
|---|---|---|---|---|
| **Multimedia Wallplates with Surge Protectors** | | | | |
| **35M2S-__** | W | 15 | 125 | Multimedia wallplate with recessed duplex surge receptacle |
| cETLus listed to UL1863 & ANSI/UL 60950-1, CSA C22.2 no. 60950-1-03; complies with all TIA/EIA 568-A & 570-B requirements | | | | |

| Catalog Number | Color Suffix | Description |
|---|---|---|
| **Replacement Surge Bloc Module** | | |
| **1209__** | A, BL, GY, V, W | Replacement module |

| Catalog Number | Color Suffix | Description |
|---|---|---|
| **Accessories for Surge Protection Receptacles** | | |
| **PJ26BL** | BL | 1-Gang mid-size decorator polycarbonate wallplate |
| **PJ26W** | W | 1-Gang mid-size decorator polycarbonate wallplate |
| **PJ26IG** | RN | 1-Gang mid-size decorator polycarbonate wallplate, pre-marked "ISOLATED GROUND" |

***Notes***

For ordering devices, include catalog number followed by the color suffix: BL (Blue), GY (Gray), RD (Red), RN (Orange), V (Ivory), W (White)

| BL | GY | RD | RN | V | W |
|---|---|---|---|---|---|
| (Blue) | (Gray) | (Red) | (Orange) | (Ivory) | (White) |

Compliances, specifications and availability are subject to change without notice.

***Factory-Installed Surge Protection***

- Includes a CHSPT2ULTRA and a two-pole 50 A circuit breaker
- Increases the effectiveness of surge protection due to reduced lead length
- A modified deadfront allows for easy viewing of indicating lights for status indication

**Surge Installed**

## Surge Installed Loadcenters

| Catalog Number | Description | Cover Catalog Number Combination | Surface |
|---|---|---|---|
| **CHSUR42N225L** ① | 42 ckt, 225 A, convertible | **CHSUR8LF** | **CHSUR8LS** |
| **CHSUR42L225L2** ① | 42 ckt, 225 A, convertible ② | **CHSUR8LF** | **CHSUR8LS** |
| **CHSUR42B200L2** ① | 42 ckt, 200 A, main breaker | **CHSUR8LF** | **CHSUR8LS** |
| **CHSUR32N225K** ① | 32 ckt, 225 A, convertible | **CHSUR8KF** | **CHSUR8KS** |
| **CHSUR32L225K** ① | 32 ckt, 225 A, convertible ② | **CHSUR8KF** | **CHSUR8KS** |
| **CHSUR32B200K** ① | 32 ckt, 200 A, main breaker | **CHSUR8KF** | **CHSUR8KS** |
| **CHSUR32B150K** ① | 32 ckt, 150 A, main breaker | **CHSUR8KF** | **CHSUR8KS** |
| **CHSUR32B100K** ① | 32 ckt, 100 A, main breaker | **CHSUR8KF** | **CHSUR8KS** |
| **CHSUR24L125E** ① | 24 ckt, 125 A, convertible ② | **CHSUR8EF** | **CHSUR8ES** |
| **CHSUR24B100E** ① | 24 ckt, 100 A, main breaker | **CHSUR8EF** | **CHSUR8ES** |
| **BRSUR4040N200** | 40/40 ckt, 200 A, convertible | Cover included | |
| **BRSUR4040L200** | 40/40 ckt, 200 A, main lug | Cover included | |
| **BRSUR4040B200** | 40/40 ckt, 200 A, main breaker | Cover included | |
| **BRSUR3040N200** | 30/40 ckt, 200 A, convertible | Cover included | |
| **BRSUR3040L200** | 30/40 ckt, 200 A, main lug | Cover included | |
| **BRSUR3040B200** | 30/40 ckt, 200 A, main breaker | Cover included | |

***Surge Ready Loadcenters***

- Provides a mounting provision for CHSPT2ULTRA
- A modified deadfront allows for easy viewing of indicating lights

**Surge Ready**

## Surge Ready Loadcenters (Provision Only, CHSPT2ULTRA and Breaker Not Included)

| Catalog Number | Description | Cover Catalog Number Combination | Surface |
|---|---|---|---|
| **CHEC42N225L** ① | 42 ckt, 225 A, convertible | **CHSUR8LF** | **CHSUR8LS** |
| **CHEC42L225L** ① | 42 ckt, 225 A, convertible ② | **CHSUR8LF** | **CHSUR8LS** |
| **CHEC42B200L** ① | 42 ckt, 200 A, main breaker | **CHSUR8LF** | **CHSUR8LS** |
| **CHEC32L225K** ① | 32 ckt, 225 A, convertible ② | **CHSUR8KF** | **CHSUR8KS** |
| **CHEC32N225K** ① | 32 ckt, 225 A, convertible | **CHSUR8KF** | **CHSUR8KS** |
| **CHEC32B200K** ① | 32 ckt, 200 A, main breaker | **CHSUR8KF** | **CHSUR8KS** |
| **CHEC32B150K** ① | 32 ckt, 150 A, main breaker | **CHSUR8KF** | **CHSUR8KS** |
| **CHEC32B100K** ① | 32 ckt, 100 A, main breaker | **CHSUR8KF** | **CHSUR8KS** |
| **CHEC24L125E** ① | 24 ckt, 125 A, convertible ② | **CHSUR8EF** | **CHSUR8ES** |
| **CHEC24B100E** ① | 24 ckt, 100 A, main breaker | **CHSUR8EF** | **CHSUR8ES** |

***Notes***

① Order cover separately.
② With main lugs installed.

## SPD Type 2 Plug-On Surge Protection—UL 1449 3rd Edition

***Product Features***

- Convenient surge protection for the loadcenter

| | Catalog Number | Description | Connection | Voltage | Phase | Frequency (Hz) | MCOV ① | VPR ② | $I_n$ ③ | SCCR ④ | Surge Current Capacity, Per Phase Rating ⑤ |
|---|---|---|---|---|---|---|---|---|---|---|---|
| BRSURGE | **BRSURGE** | UL for use in a single-phase Type BR loadcenter. This unit is classified by UL for use in select GE, ITE/Siemens and Crouse-Hinds panels (refer to Pub. No. 5655B65H01 for additional details). | Plug on to the loadcenter bus; see instructions. | 120/240 Vac | Single | 60 | 150 V L1–N, 300 V L–L | 600 V L1–N, 1000 V L–L | 3 kA | 10 kA | 18 kA |
| CHSA | **CHSA** | UL and CSA for use in a Type CH loadcenter. | Plug on to the loadcenter bus; see instructions. | 120/240 Vac | Single | 60 | 150 V L1–N, 300 V L–L | 600 V L1–N, 1000 V L–L | 3 kA | 10 kA | 18 kA |
| BRSURGECSA | **BRSURGECSA** | CSA for use in an Eaton Type BR loadcenter. | Plug on to the loadcenter bus; see instructions. | 120/240 Vac | Single | 60 | 150 V L1–N, 300 V L–L | 600 V L1–N, 1000 V L–L | 3 kA | 10 kA | 18 kA |
| CHQSA | **CHQSA** | This device is UL classified to be used in place of Square D Type QO surge arresters (refer to Pub-23974). | Plug on to the loadcenter bus; see instructions. | 120/240 Vac | Single | 60 | 150 V L1–N, 300 V L–L | 600 V L1–N, 1000 V L–L | 3 kA | 10 kA | 18 kA |

***Notes***

① MCOV: Maximum Continuous Operating Voltage that may be applied to the device per mode.
② VPR: Voltage Protection Rating is the measured limiting voltage after a surge event.
③ $I_n$: Nominal Discharge Current is the current that the device can withstand for 15 impulses.
④ SCCR: The amount of current the product can withstand under short-circuit conditions.
⑤ Surge Current Capacity: The maximum one-time surge current rating per phase.

For warranty details, go to www.eaton.com/surgetrap.

# Residential Standby Backup Power Solutions

**3.1 Standby Generators**

Product Description . . . . . V1-T3-2
Application Description . . . . . V1-T3-2
Features, Benefits and Functions . . . . . V1-T3-2
Standards and Certifications . . . . . V1-T3-2
Catalog Number Selection . . . . . V1-T3-3
Product Selection . . . . . V1-T3-3
Air-Cooled Generators . . . . . V1-T3-3
Liquid-Cooled Generators . . . . . V1-T3-4
Accessories . . . . . V1-T3-5
Sizing Guidelines . . . . . V1-T3-6
Dimensions . . . . . V1-T3-6

**3.2 Portable Generators**

Product Selection . . . . . V1-T3-8
Dimensions . . . . . V1-T3-10

**3.3 Automatic Transfer Switches**

Product Description . . . . . V1-T3-11
Application Description . . . . . V1-T3-11
Standards and Certifications . . . . . V1-T3-12
Product Selection . . . . . V1-T3-13
Standard Automatic Transfer Switches . . . . . V1-T3-13
Green Automatic Transfer Switches—Featuring Active Load Management Technology . . . . . V1-T3-13
ATS Ready Loadcenter . . . . . V1-T3-14
Dimensions . . . . . V1-T3-15

**3.4 Manual Transfer Switches**

Product Description . . . . . V1-T3-16
Application Description . . . . . V1-T3-16
Features, Benefits and Functions . . . . . V1-T3-16
Standards and Certifications . . . . . V1-T3-17
Reference Information . . . . . V1-T3-17
Product Selection . . . . . V1-T3-18
Manual Transfer Switches and Generator Panels Selection . . . . . V1-T3-18
Power Inlet Boxes . . . . . V1-T3-18
Technical Data and Specifications . . . . . V1-T3-19
Dimensions . . . . . V1-T3-19

**Standby Generator Systems**

*EGENX20A*

*EGEN70*

## Contents


| *Description* | *Page* |
|---|---|
| Standby Generators | |
| Catalog Number Selection | **V1-T3-3** |
| Product Selection | **V1-T3-3** |
| Accessories | **V1-T3-5** |
| Sizing Guidelines | **V1-T3-6** |
| Dimensions | **V1-T3-6** |


## Product Description

A standby generator system is a package of equipment specifically designed to provide substitute electrical power to a residence in the event of a utility power outage. These systems are comprised of a generator, transfer switch and the connections necessary for installation. Eaton's standby generator line consists of air-cooled and liquid-cooled models ranging from 8000 watts up to 150,000 watts.

### Air-Cooled Standby

Eaton's air-cooled generators range from 8 to 22 kW and these units are perfect for automatically backing up every circuit within a home such as air conditioner units, refrigerators, lighting, furnace fans, sump pumps and water pumps.

Eaton's air-cooled standby generators offer fully automatic operation and provide most homeowners with enough power for complete whole house comfort. These units all operate at ultra quiet 66 dB, or less, sound level.

### Liquid-Cooled Standby

Eaton's liquid-cooled generators feature automotive style engines that range from 22 to 150 kW of power output. These units run so quietly that you'll forget that you own a generator until you need it. These units are available in steel or aluminum enclosures and are available in single- and three-phase in four voltages: 120/240 V, single-phase; 120/208 V, three-phase; 240 V, three-phase; and 277/480 V, three-phase.

## Application Description

Standby generator systems are most often used in residential, agricultural and light commercial applications. Comfort and safety are key concerns of many homeowners who are dependent on an uninterrupted supply of electricity.

The increase in our dependence on power is due in part to the popularity of home offices and in-home health care. Many regions of the United States experience periodic power outages due to extreme weather conditions such as ice and snowstorms, heat waves, tornadoes or hurricanes.

Eaton highly recommends that any generator system be installed by a qualified electrician and/or generator installer.

## Features, Benefits and Functions

Eaton's generator systems offer a wide range of features. All systems feature:

- Powerful engines
- Reliable Eaton transfer switches and control systems using switching duty rated circuit breakers
- Weekly exercise function
- Automatic transfer systems feature automatic start/stop

## Standards and Certifications

- CSA®, cUL® and UL 2200 listed and approved
- SCAQMD (selected models only)
- All transfer switches are UL® 67 and UL 1008 listed as "Transfer Switches"
- All generators are UL 2200 listed

Listed Listed

## Catalog Number Selection

### Air-Cooled Generators

**EGENX 22 A**

| Type | Rated Power (LP/NG) | Enclosure |
|---|---|---|
| Eaton generator EGENX Series | **8** = 8/7 kW<br>**11** = 11/10 kW<br>**16** = 16/16 kW<br>**20** = 20/18 kW<br>**22** = 22/19.5 kW | **A** = Aluminum<br>**Blank** = Steel |

### Liquid-Cooled Generators

**EGEN 25 A N S Y**

| kW Rating | | Voltage Required | Fuel Type | Enclosure | SCAQMD Compliance |
|---|---|---|---|---|---|
| **22** | **60** | **A** = Single-phase 120/240 V | **N** = Natural gas | **A** = Aluminum | **N** = No |
| **25** | **70** | **G** = Three-phase 208 V | **L** = Liquid propane | **S** = Steel | **Y** = Yes |
| **27** | **80** | **J** = Three-phase 240 V | | | |
| **30** | **100** | **K** = Three-phase 480 V | | | |
| **36** | **130** | | | | |
| **45** | **150** | | | | |
| **48** | | | | | |

## Product Selection

### Air-Cooled Generators

| Rated Power kW (LP/NG) | Maximum Rated Amperes at 240 Vac (LP/NG) | Main Line Circuit Breaker Amperes | Enclosure Material | Engine Size | Number of Cylinders | Fuel Type | GFI Receptacle | SCAQMD Compliant | Sound Emissions (dB at 7 m) | Limited Warranty (yrs) | Catalog Number ① |
|---|---|---|---|---|---|---|---|---|---|---|---|
| 8/7 | 33.3/29.2 | 35 | Steel | 410 cc | 1 | Liquid propane/ natural gas | No | Yes | 62 | 5 | **EGENX8** |
| 11/10 | 45.8/41.7 | 50 | Aluminum | 530 cc | 2 | Liquid propane/ natural gas | No | Yes | 63 | 5 | **EGENX11A** |
| 16/16 | 66.6/66.6 | 65/55 | Aluminum | 992 cc | 2 | Liquid propane/ natural gas | No | Yes | 66 | 5 | **EGENX16A** |
| 20/18 | 83.3/75.0 | 90 | Aluminum | 999 cc | 2 | Liquid propane/ natural gas | Yes | Yes | 66 | 5 | **EGENX20A** ② |
| 22/19.5 | 91.7/81.2 | 100 | Aluminum | 999 cc | 2 | Liquid propane/ natural gas | Yes | Yes | 67 | 5 | **EGENX22A** ② |

***Notes***

① Battery to be furnished by others. Recommended size: Group 26R, 12 V, 225 CCA min.

② Includes base fascia (No. EGENFASCIA) as standard.

**EGEN48ANAN**

## Liquid-Cooled Generators ①②

| Catalog Number Prefix | kW Rating | Voltages Available | Fuel Type | Enclosure | SCAQMD Compliance ③ |
|---|---|---|---|---|---|
| **EGEN22** | 22 | **G**—208 V, three-phase | **N**—NG/LP field convertible (Default set up for NG) | **S**—Steel | **Y**—Yes (Default Compliant) |
| | | **J**—240 V, three-phase | | | |
| **EGEN25** | 25 | **A**—120/240 V, single-phase | **N**—NG/LP field convertible (Default set up for NG) | **S**—Steel | **Y**—Yes (Default Compliant) |
| | | **G**—208 V, three-phase | | | |
| | | **J**—240 V, three-phase | | | |
| **EGEN27** | 27 | **A**—120/240 V, single-phase | **N**—NG/LP field convertible (Default set up for NG) | **A**—Aluminum | **Y**—Yes (Default Compliant) |
| | | **G**—208 V, three-phase | | | |
| | | **J**—240 V, three-phase | | | |
| **EGEN30** | 30 | **A**—120/240 V, single-phase | **N**—NG/LP field convertible (Default set up for NG) | **S**—Steel | **Y**—Yes (Default Compliant) |
| | | **G**—208 V, three-phase | | | |
| | | **J**—240 V, three-phase | | | |
| **EGEN36** | 36 | **A**—120/240 V, single-phase | **N**—NG/LP field convertible (Default set up for NG) | **A**—Aluminum | **Y**—Yes |
| | | **G**—208 V, three-phase | | | |
| | | **J**—240 V, three-phase | | | **N**—No |
| | | **K**—480 V, three-phase | | | |
| **EGEN45** | 45 | **A**—120/240 V, single-phase | **N**—NG/LP field convertible (Default set up for NG) | **S**—Steel | **Y**—Yes |
| | | **G**—208 V, three-phase | | | |
| | | **J**—240 V, three-phase | | | **N**—No |
| | | **K**—480 V, three-phase | | | |
| **EGEN48** | 48 | **A**—120/240 V, single-phase | **N**—NG/LP field convertible (Default set up for NG) | **A**—Aluminum | **Y**—Yes |
| | | **G**—208 V, three-phase | | | |
| | | **J**—240 V, three-phase | | | **N**—No |
| | | **K**—480 V, three-phase | | | |
| **EGEN60** | 60 | **A**—120/240 V, single-phase | **N**—Natural gas | **A**—Aluminum | **Y**—Yes |
| | | **G**—208 V, three-phase | | | |
| | | **J**—240 V, three-phase | **L**—Liquid propane | **S**—Steel | **N**—No |
| | | **K**—480 V, three-phase | | | |
| **EGEN70** | 70 | **A**—120/240 V, single-phase | **N**—Natural gas | **A**—Aluminum | **Y**—Yes |
| | | **G**—208 V, three-phase | | | |
| | | **J**—240 V, three-phase | **L**—Liquid propane | | **N**—No |
| | | **K**—480 V, three-phase | | | |
| **EGEN80** | 80 | **A**—120/240 V, single-phase | **N**—Natural gas | **A**—Aluminum | **Y**—Yes |
| | | **G**—208 V, three-phase | | | |
| | | **J**—240 V, three-phase | **L**—Liquid propane | | **N**—No |
| | | **K**—480 V, three-phase | | | |
| **EGEN100** | 100 | **A**—120/240 V, single-phase | **N**—Natural gas | **A**—Aluminum | **Y**—Yes |
| | | **G**—208 V, three-phase | | | |
| | | **J**—240 V, three-phase | **L**—Liquid propane | | **N**—No |
| | | **K**—480 V, three-phase | | | |
| **EGEN130** | 130 | **A**—120/240 V, single-phase | **N**—Natural gas | **A**—Aluminum | **Y**—Yes |
| | | **G**—208 V, three-phase | | | |
| | | **J**—240 V, three-phase | **L**—Liquid propane | | **N**—No |
| | | **K**—480 V, three-phase | | | |
| **EGEN150** | 150 | **A**—120/240 V, single-phase | **N**—Natural gas | **A**—Aluminum | **Y**—Yes |
| | | **G**—208 V, three-phase | | | |
| | | **J**—240 V, three-phase | **L**—Liquid propane | | **N**—No |
| | | **K**—480 V, three-phase | | | |

***Notes***

① All liquid-cooled models suitable for "optional" standby backup power only, as dictated by NEC Article 702/NFPA 70. Not suitable for neither "emergency" nor "legally required" applications as dictated by NEC Article 700/701 and NFPA 110.

② Models 70–150 kW include battery. For all other liquid-cooled models, battery must be furnished by others.

③ South Coast Air Quality Management District (CA and MA). Check your local requirements.

## Accessories

### Generator Accessories—Air and Liquid-Cooled Generators

| Description | Catalog Number |
|---|---|
| **General Accessories** | |
| Air-cooled transportation cart | **EGENCART** |
| Bisque paint kit for 2009 model lineup | **EGENPAINT** |
| Display shell—bisque color | **EGENSHELL** |
| Generator fascia for air-cooled models. Bisque color (included as standard on EGENX20A and EGENX22A models) | **EGENFASCIA** |
| **Wireless Remote Monitoring** | |
| Advanced wireless remote monitor w/smart device connectivity. Air-cooled/liquid-cooled generators. 2009 models or newer | **EGENMOBILE** |
| Adapter wire harness kit for EGENMOBILE. Required for liquid-cooled generators only 22–150 kW. 2009 models or newer | **EGENKIT** |
| Basic in-house remote wireless monitor. Compatible with air/liquid-cooled models. 2009 models or newer | **EGENinHOME** |
| Adapter wire harness kit for EGENinHOME. Required for liquid-cooled units only 22–150 kW. 2009 models or newer | **EGENinHOMEKIT** |
| **Cold Weather Kits** | |
| Cold weather kit for all air-cooled generator models (8–20 kW). Battery and crankcase warmer | **6212CH** |
| 22, 27, 36, 45 and 60 kW (2.4 L) cold weather kit | **5630CH** |
| 25 and 30 kW (1.5 L) cold weather kit | **6175CH** |
| 100 and 130 kW (6.8 L) cold weather kit | **5633CH** |
| 48 (5.4 L), 80 (4.6 L) and 70 and 150 kW (6.8 L) cold weather kit | **5632CH** |
| 25 and 30 kW (1.6 L) cold weather kit for models prior to February 2012 | **5629CH** |
| 48 kW (4.2 L) cold weather kit for models prior to February 2012 | **5631CH** |
| **Extreme Cold Weather Kits** | |
| 25 and 30 kW extreme cold weather kit 1.5 L engine | **6174CH** |
| 25 and 30 kW extreme cold weather kit 1.6 L engine (prior to February 2012) | **5615CH** |
| 22, 27, 36, 45 and 60 kW extreme cold weather kit for 2.4 L engine | **5616CH** |
| 48 kW extreme cold weather kit for 5.4 L engine | **6204CH** |
| 48 kW extreme cold weather kit for 4.2 L engine (prior to February 2012) | **5618CH** |
| 70, 100 and 130 kW generator extreme cold weather kit for 6.8 L engine gear drive | **5620CH** |
| 80 kW extreme cold weather kit for 4.6 L engine | **5619CH** |
| 150 kW generator extreme cold weather kit for 6.8 L engine direct drive | **5667CH** |
| Extreme cold weather kit (engine warmer) for air-cooled 8–10 kW, 410/530 cc engines (after April 2010) | **5863CH** |
| Extreme cold weather kit (engine warmer) for air-cooled 14–20 kW, 760/992/999 cc engines (after April 2010) | **5864CH** |
| **Maintenance Kits** | |
| 8 kW generator maintenance kit 410 cc engine. For #EGENX8 model only | **6482CH** |
| 11 kW generator maintenance kit 530 cc engine. For #EGENX11A model only | **6483CH** |
| 16 kW generator maintenance kit, 992 cc engine. For #EGENX16A model only | **6484CH** |
| 20 kW generator maintenance kit, 999 cc engine. For #EGENX20A model only | **6485CH** |
| 22 kW generator maintenance kit, 999 cc engine. For #EGENX22A model only | **6485CH** |
| 8 kW generator maintenance kit 410 cc engine. #EGEN8 vintage model only | **5662CH** |
| 10 kW generator maintenance kit 530 cc engine. #EGEN10 vintage model only | **5663CH** |
| 14 and 17 kW generator maintenance kit, 760/990 cc engine. #EGEN14 and #EGEN17-17A vintage models only | **5664CH** |
| 14 and 17 kW generator maintenance kit, 760/990 cc engine. For #EGENX14 and #EGENX17-17A vintage models only | **6484CH** |
| 20 kW generator maintenance kit, 999 cc engine. #EGEN20A vintage model only | **5665CH** |
| 22 and 27 kW generator maintenance kit, 2.4 L engine | **5656CH** |
| 25 and 30 kW generator maintenance kit, 1.5 L engine | **6176CH** |
| 25 and 30 kW generator maintenance kit, 1.6 L engine (prior to February 2012) | **5655CH** |
| 36 kW generator maintenance kit, 2.4 L engine | **5984CH** |
| 45 kW generator maintenance kit, 2.4 L engine | **6172CH** |
| 48 kW generator maintenance kit, 4.2 L engine | **5658CH** |
| 60 kW generator maintenance kit, 2.4 L engine | **6171CH** |
| 80 kW generator maintenance kit, 4.6 L engine | **5985CH** |
| 70, 100, 130 and 150 kW generator maintenance kit, 6.8 L engine | **5660CH** |

**EGENMOBILE**

**Cold Weather Kits**

**Extreme Cold Weather Kits**

**Maintenance Kits**

## Sizing Guidelines

When selecting the essential circuits that will be switched to "Backup Power," it is important that the sum of the combined circuit loads does not exceed the wattage/amperage capacity of the generator. To help you with your selection of essential circuits, please add up the total wattage of all electrical devices to be connected at one time. This total should NOT be greater than the generator's wattage capacity.

Refer to Eaton Generator Sizing Guide Publication Number TD00405018E and consult with a trained professional.

### Circuit Selection ①②③

| Device | Common Running Watts |
|---|---|
| Air conditioner (12,000 btu) | 1700 |
| Air conditioner (24,000 btu) | 3800 |
| Air Conditioner (40,000 btu) | 6000 |
| Battery charger (20 amp) | 500 |
| Circular saw (6-1/2-inch) | 800–1000 |
| Clothes dryer (electric) | 5750 |
| Clothes dryer (gas) | 700 |
| Clothes washer | 1150 |
| Coffee maker | 1750 |
| Compressor (1 hp) | 2000 |
| Compressor (1/2 hp) | 1400 |
| Compressor (3/4 hp) | 1800 |
| Curling iron | 700 |
| Dehumidifier | 650 |
| Electric blanket | 400 |
| Electric range (per element) | 1500 |
| Electric skillet | 1250 |
| Freezer | 700 |
| Furnace fan (3/5 hp) | 875 |
| Garage door opener | 500–750 |
| Hair dryer | 1200 |
| Hand drill | 250–1100 |
| Iron | 1200 |
| Jet pump | 800 |
| Light bulb | 100 |
| Microwave oven | 700–1000 |
| Milk cooler | 1100 |
| Oil burner on furnace | 300 |
| Oil fired space heater (140,000 btu) | 400 |
| Oil fired space heater (30,000 btu) | 150 |
| Oil fired space heater (85,000 btu) | 225 |
| Radio | 50–200 |
| Refrigerator | 700 |
| Slow cooker | 200 |
| Submersible pump (1 hp) | 2000 |
| Submersible pump (1/2 hp) | 1500 |
| Submersible pump (1-1/2 hp) | 2800 |
| Sump pump | 800–1050 |
| Table saw (10-inch) | 1750–2000 |
| Television | 200–500 |
| Toaster | 1000–1650 |

## Dimensions

Approximate Dimensions in Inches (mm)

### Air-Cooled Standby

| Catalog Number | Length | Width | Height | Weight in Lbs (kg) |
|---|---|---|---|---|
| **EGENX8** | 48.00 (1219.2) | 25.00 (635.0) | 29.00 (736.6) | 360 (163.0) |
| **EGENX11A** | 48.00 (1219.2) | 25.00 (635.0) | 29.00 (736.6) | 373 (169.2) |
| **EGENX16A** | 48.00 (1219.2) | 25.00 (635.0) | 29.00 (736.6) | 437 (198.2) |
| **EGENX20A** | 48.00 (1219.2) | 25.00 (635.0) | 29.00 (736.6) | 451 (204.6) |
| **EGENX22A** | 48.00 (1219.2) | 25.00 (635.0) | 29.00 (736.6) | 476 (216.0) |

### Liquid-Cooled Standby

| Catalog Number | Length | Width | Height | Weight in Lbs (kg) |
|---|---|---|---|---|
| **EGEN22** | 62.00 (1574.8) | 29.00 (736.6) | 34.00 (863.6) | 895 (406.3) |
| **EGEN25** | 63.00 (1600.2) | 30.00 (762.0) | 35.00 (889.0) | 875 (397.3) |
| **EGEN27** | 64.00 (1625.6) | 31.00 (787.4) | 36.00 (914.4) | 891 (404.5) |
| **EGEN30** | 60.00 (1651.0) | 32.00 (812.8) | 37.00 (939.8) | 935 (424.5) |
| **EGEN36** | 77.00 (1955.8) | 34.00 (863.6) | 45.00 (1143.0) | 1683 (764.1) |
| **EGEN45** | 78.00 (1981.2) | 35.00 (889.0) | 46.00 (1168.4) | 1414 (642.0) |
| **EGEN48** | 79.00 (2006.6) | 36.00 (914.4) | 47.00 (1193.8) | 1703 (773.2) |
| **EGEN60** ④ | 80.00 (2032.0) | 37.00 (939.8) | 48.00 (1219.2) | 1650 (749.1) |
| **EGEN70** ④ | 97.00 (2463.8) | 37.00 (939.8) | 48.00 (1219.2) | 2185 (992.0) |
| **EGEN80** ④ | 115.00 (2921.0) | 36.80 (934.7) | 79.00 (2006.6) | 2010 (912.5) |
| **EGEN100** ④ | 116.00 (2946.4) | 36.80 (934.7) | 80.00 (2032.0) | 2705 (1228.1) |
| **EGEN130** ④ | 117.00 (2971.8) | 36.80 (934.7) | 81.00 (2057.4) | 2873 (1304.3) |
| **EGEN150** ④ | 118.00 (2997.2) | 36.80 (934.7) | 82.00 (2082.8) | 2666 (1210.4) |

***Notes***

① The rated wattage of lights can be taken from light bulbs. The rated wattage of tools, appliances and motors can usually be found on a data plate or decal affixed to the device.

② If the appliance, tool or motor does not give wattage, multiply 120 volts times the ampere rating to determine watts (volts x amps = watts) for single-phase only.

③ Some electric motors (induction types) require about three times more watts of power for starting than for running. This surge lasts for only a few seconds. Be sure you allow for this high starting wattage when selecting electrical devices that will be energized by the backup power system:
Figure the watts required to start the largest motor.
Add that to the total running watts of all other connected loads.

④ All weights provided for steel enclosures only.

EGENP8000EX

## Contents

| *Description* | *Page* |
|---|---|
| Portable Generators | |
| Product Selection | **V1-T3-8** |
| Dimensions | **V1-T3-10** |



## Product Description

Whereas permanently installed standby systems are designed for larger homes, small businesses or secondary residences, portable generators are primarily used for smaller homes, essential loads, construction sites, camping, tailgating and wherever portable temporary power is required.

## Application Description

Portable generator systems are primarily used for smaller homes or for construction sites where temporary power is required. Permanently installed standby systems are designed for larger homes, small businesses or secondary residences, such as vacation homes and cabins, that require uninterrupted power for critical loads.

As the name indicates and due to physical size and weight, portable generators can easily be transported from one location to another.

Designed for outdoor use only, common applications vary from homes to camping to construction sites, providing backup power everywhere electrical power is needed.

## Standards and Certifications

- UL Listed

UL Listed

## Catalog Number Selection

### Portable Generators

**EGEN P 8000 E X**

Eaton generator

| Type |
|---|
| **P** = Portable |

| Power Output |
|---|
| **5500** = 5.5 kW |
| **6500** = 6.5 kW |
| **7000** = 7.5 kW |
| **8000** = 8 kW |
| **15000** = 15 kW |
| **17500** = 17.5 kW |

| Startup Method |
|---|
| **Blank** = Manual/recoil only |
| **E** = Electric and/or manual/recoil |

| Model |
|---|
| **Blank** = General purpose |
| **CA** = General purpose "CARB" compliant (CA only) |
| **X** = XG Series |

## Product Selection

### Portable Generators

| | Running Watts | Starting Watts | Engine Displacement/ Type | Startup Method | Fuel Tank Capacity (gal) ① | Approx. Running Time at 1/2 load (hrs) | Battery Included | Outlets Configuration | Warranty Residential/ Commercial (yrs) | Catalog Number |
|---|---|---|---|---|---|---|---|---|---|---|
| **General Purpose (49-State)** | | | | | | | | | | |
| **EGENP5500** | 5500 | 6875 | 389 cc/OHV | Manual | 7.2 | 10 | No | 1 x 30 A L14-30R (twist lock), 2 x 20 A 5-20R duplex | 2/1 Ltd | **EGENP5500** |
| **EGENP6500** | 6500 | 8125 | 389 cc/OHV | Manual | 7.2 | 10 | No | 1 x 30 A L14-30R (twist lock), 2 x 20 A 5-20R duplex | 2/1 Ltd | **EGENP6500** |
| **EGENP6500E** | 6500 | 8125 | 389 cc/OHV | Manual/ electric | 7.2 | 10 | Yes | 1 x 30 A L14-30R (twist lock), 2 x 120 A 5-20R duplex | 2/1 Ltd | **EGENP6500E** |
| **EGENP7500E** | 7500 | 9375 | 420 cc/OHV | Manual/ electric | 8.0 | 12 | Yes | 1 x 30 A L14-30R (twist lock), 2 x 20 A 5-20R duplex | 2/1 Ltd | **EGENP7500E** |
| **EGENP15000E** | 15000 | 22500 | 992 cc/OHVI | Manual/ electric | 16.0 | 12 | Yes | 1 x 50 A 14-50R, 1 x 30 A L14-30R (twist lock), 2 x 30 A L5-30R (twist lock), 1 x 20 A 5-20R duplex, 1 x 20 A GFCI 5-20R duplex | 2/1 Ltd | **EGENP15000E** |
| **EGENP17500E** | 17500 | 26250 | 992 cc/OHVI | Manual/ electric | 16.0 | 10 | Yes | 1 x 50 A 14-50R, 1 x 30 A L14-30R (twist lock), 1 x 30 A L5-30R (twist lock),1 x 20 A 5-20R duplex, 1 x 20 A 5-20R GFCI duplex | 2/1 Ltd | **EGENP17500E** |

***Note***

① Requires gasoline as fuel to operate.

## Portable Generators, continued

| | Running Watts | Starting Watts | Engine Displacement/ Type | Startup Method | Fuel Tank Capacity (gal) ① | Approx. Running Time at 1/2 load (hrs) | Battery Included | Outlets Configuration | Warranty Residential/ Commercial (yrs) | Catalog Number |
|---|---|---|---|---|---|---|---|---|---|---|
| **XG Series** | | | | | | | | | | |
| **EGENP7000EX** | 7000 | 8750 | 407 cc/OHVI | Manual/ electric | 9 | 10 | Yes | 1 x 30 A L14-30R (twist lock), 2 x 20 A GFCI 5-20R duplex | 2/1 Ltd | **EGENP7000EX** |
| **EGENP8000EX** | 8000 | 10000 | 407 cc/OHVI | Manual/ electric | 10 | 10 | Yes | 1 x 30 A L14-30R (twist lock), 2 x 20 A GFCI 5-20R duplex | 2/1 Ltd | **EGENP8000EX** |
| **EGENP10000EX** | 10000 | 12500 | 530 cc/OHVI | Manual/ electric | 10 | 10 | Yes | 1 x 50 A 14-50R, 1 x 30 A L14-30R (twist lock), 1 x 30 A L5-30R (twist Lock), 2 x 20 A GFCI 5-20R duplex | 2/1 Ltd | **EGENP10000EX** |
| **CARB ② Compliant (Required in California Only)** | | | | | | | | | | |
| **EGENP5500CA** | 5500 | 6875 | 389 cc/OHV | Manual | 7.2 | 10 | No | 1 x 30 A L14-30R (twist lock), 2 x 20 A GFCI 5-20R duplex | 2/1 Ltd | **EGENP5500CA** |
| **EGENP6500CA** | 6500 | 8125 | 389 cc/OHV | Manual | 7.2 | 10 | No | 1 x 30 A L14-30R (twist lock), 2 x 120 A 5-20R duplex | 2/1 Ltd | **EGENP6500CA** |

***Notes***

① Requires gasoline as fuel to operate.

② California Air Resources Board.

## Dimensions

Approximate Dimensions in Inches (mm)

### Portable Generators



| Catalog Number | Length | Width | Height | Weight Lbs (kg) |
|---|---|---|---|---|
| **EGENP5500** | 27.25 (692.2) | 27.00 (685.8) | 25.00 (635.0) | 171.0 (77.6) |
| **EGENP6500** | 27.25 (692.2) | 27.00 (685.8) | 25.00 (635.0) | 175.0 (79.5) |
| **EGENP6500E** | 27.25 (692.2) | 27.00 (685.8) | 25.00 (635.0) | 186.0 (84.4) |
| **EGENP7500E** | 27.25 (692.2) | 27.00 (685.8) | 25.00 (635.0) | 191.5 (86.9) |
| **EGENP15000E** | 48.50 (1231.9) | 31.00 (787.4) | 39.50 (1003.3) | 363.0 (164.8) |
| **EGENP17500E** | 48.50 (1231.9) | 31.00 (787.4) | 39.50 (1003.3) | 390.0 (177.1) |
| **EGENP7000EX** | 31.00 (787.4) | 25.50 (647.7) | 28.00 (711.2) | 245.0 (111.2) |
| **EGENP8000EX** | 31.00 (787.4) | 25.50 (647.7) | 28.00 (711.2) | 235.0 (106.7) |
| **EGENP10000EX** | 30.00 (762.0) | 29.50 (749.3) | 31.00 (787.4) | 300.0 (136.2) |
| **EGENP5500CA** | 27.25 (692.2) | 27.00 (685.8) | 25.00 (635.0) | 170.9 (77.6) |
| **EGENP6500CA** | 27.25 (692.2) | 27.00 (685.8) | 25.00 (635.0) | 177.0 (80.3) |

**Residential Automatic Transfer Switches**

## Contents


| *Description* | *Page* |
|---|---|
| Automatic Transfer Switches | |
| Standards and Certifications | **V1-T3-12** |
| Catalog Number Selection | **V1-T3-12** |
| Product Selection | **V1-T3-13** |
| ATS Ready Loadcenter | **V1-T3-14** |
| Dimensions | **V1-T3-15** |




## Product Description

### 50, 100, 150, 200 and 400 A Fully Automatic

All Eaton automatic transfer switches (ATS) monitor utility and generator voltages and will automatically connect to the appropriate source of power. Eaton offers two types of automatic transfer switches to suit your personal backup power needs—the standard ATS EGSX series with load shedding capabilities and the Green ATS EGSU series that provides a truly active load management solution.

### Green Line of Automatic Transfer Switches

With the rising cost of commodities and fuel in today's economy, consumers are concerned with maximizing the value of their purchases.

Electrical loads are now intelligently managed with Eaton's Green Line of automatic transfer switches. The active load management inside each Green ATS allows the consumer to use 100% of the power rated output of the generator and/or use a smaller generator, reducing upfront installation costs and saving on ongoing fuel consumption costs.

As a part of Eaton's commitment to quality, every Green ATS, at no extra cost, will ship with a CHSPT2ULTRA whole surge protector, which will help prevent potential damage to valued electronics caused by power surges in the utility line.

## Application Description

### 50, 100, 150, 200 and 400 A Switches

100, 200 and 400 A switches are capable of "whole house" power transfer in residential/small business applications.

**50 A—Indoor Installation—Selected Load Pre-Wired**

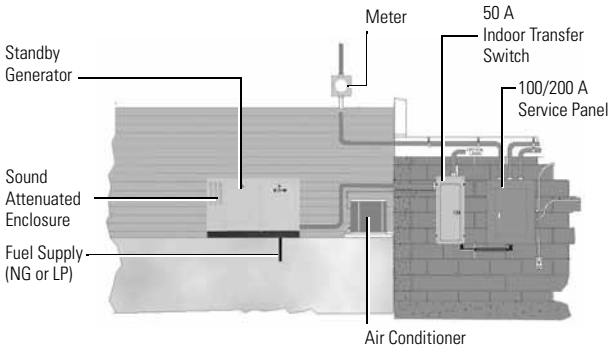


**100/200 A—Outdoor Installation—Whole House Pre-Wired**

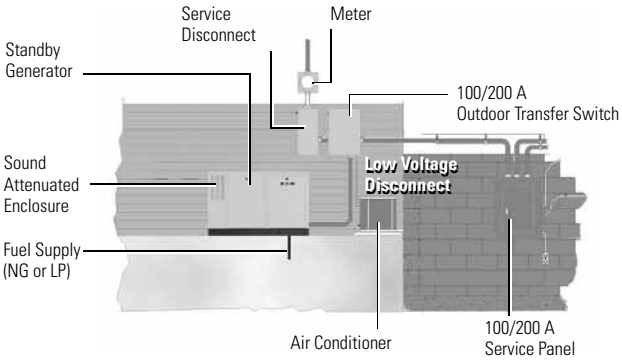

## Standards and Certifications

- UL 1008 listed



Listed

## Catalog Number Selection

### Standard Automatic Transfer Switches—EGSX Series

**E GSX 200 __ NSEA**

| Manufacturer |
|---|
| Eaton |

| Type |
|---|
| Generator transfer switch EGSX Series |

| Ampere Rating |
|---|
| **50** = 50 A |
| **100** = 100 A |
| **150** = 150 A |
| **200** = 200 A |
| **400** = 400 A |

| Loadcenter (CH Type, Integral) |
|---|
| **Blank** = None |
| **L12** = 12 circuits N1 |
| **L12R** = 12 circuits N3R |
| **L24R** = 24 circuits N3R |

| Service Entrance Rated |
|---|
| **NSEA** = Service entrance (normal source only) |
| **A** = Non-service entrance |

### Green Automatic Transfer Switches—EGSU Series

**E GSU 200 __ NSE ACA**

| Manufacturer |
|---|
| Eaton |

| Type |
|---|
| Generator universal transfer switch EGSU "Green" Series |

| Ampere Rating |
|---|
| **100** = 100 A |
| **150** = 150 A |
| **200** = 200 A |
| **400** = 400 A |

| Loadcenter (CH Type, Integral) |
|---|
| **Blank** = None |
| **L24** = 24 circuits |

| Service Entrance Rated |
|---|
| **NSE** = Service entrance (normal source only) |
| **Blank** = Non-service entrance |

| Load Management |
|---|
| **ACA** = Active load management |

## Product Selection

EGSX50L12R

### Standard Automatic Transfer Switches ①

| Ampere Rating | Voltage | Service Entrance Rated | No. of Load Shed Contacts | Contactor Wire Size Range(s) | No. of Cables per Phase | Withstand Current (rms) at 240 Vac | No. of Circuits Included ② | Frequency (Hz) | Enclosure Type | Most Common Generator Sizes (kW) ③ | Catalog Number |
|---|---|---|---|---|---|---|---|---|---|---|---|
| 50 | 120/240 | No | 2 | #14–#6 | 1 | 5000 | 12 | 50/60 | NEMA 1 (indoor) | 8, 11 | **EGSX50L12** |
| 50 | 120/240 | No | 2 | #14–#6 | 1 | 5000 | 12 | 50/60 | NEMA 3R (outdoor) | 8, 11 | **EGSX50L12R** |
| 100 | 120/240 | No | 2 | #14–#2/0 | 1 | 10,000 | — | 50/60 | NEMA 3R (outdoor) | 8, 11, 16 | **EGSX100A** |
| 100 | 120/240 | Yes | 2 | #14–#2/0 | 1 | 25,000 | — | 50/60 | NEMA 3R (outdoor) | 8, 11, 16 | **EGSX100NSEA** |
| 100 | 120/240 | No | 2 | #14–#2/0 | 1 | 10,000 | 24 | 50/60 | NEMA 3R (outdoor) | 8, 11, 16 | **EGSX100L24RA** |
| 150 | 120/240 | Yes | 2 | #4–300 kcmil | 1 | 25,000 | — | 50/60 | NEMA 3R (outdoor) | 16, 20, 22 | **EGSX150NSEA** |
| 200 | 120/240 | No | 2 | #4–300 kcmil | 1 | 10,000 | — | 50/60 | NEMA 3R (outdoor) | 16, 20, 22 | **EGSX200A** |
| 200 | 120/240 | Yes | 2 | #4–300 kcmil | 1 | 25,000 | — | 50/60 | NEMA 3R (outdoor) | 16, 20, 22 | **EGSX200NSEA** |
| 400 | 120/240 | Yes | 2 | 750 kcmil–2<br>300 kcmil–1/0 | 1/2 | 35,000 | — | 50/60 | NEMA 3R (outdoor) | >22 | **EGSX400NSEA** |

EGSU200NSEACA

### Green Automatic Transfer Switches ④—Featuring Active Load Management Technology

| Ampere Rating | Voltage | Service Entrance Rated | Contactor Wire Size Range(s) | No. of Cables per Phase | Withstand Current (rms) at 240 Vac | No. of Circuits Included ② | Frequency (Hz) | Enclosure Type | Most Common Generator Sizes (kW) ③ | Catalog Number ⑤ |
|---|---|---|---|---|---|---|---|---|---|---|
| 100 | 120/240 | No | #14–#2/0 | 1 | 10,000 | — | 50/60 | NEMA 3R (outdoor) | 8, 11, 16 | **EGSU100ACA** |
| 100 | 120/240 | Yes | #14–#2/0 | 1 | 25,000 | — | 50/60 | NEMA 3R (outdoor) | 8, 11, 16 | **EGSU100NSEACA** |
| 100 | 120/240 | No | #14–#2/0 | 1 | 10,000 | 24 | 50/60 | NEMA 3R (outdoor) | 8, 11, 16 | **EGSU100L24RACA** |
| 150 | 120/240 | Yes | #4–300 kcmil | 1 | 25,000 | — | 50/60 | NEMA 3R (outdoor) | 16, 20, 22 | **EGSU150NSEACA** |
| 200 | 120/240 | No | #4–300 kcmil | 1 | 10,000 | — | 50/60 | NEMA 3R (outdoor) | 16, 20, 22 | **EGSU200ACA** |
| 200 | 120/240 | Yes | #4–300 kcmil | 1 | 25,000 | — | 50/60 | NEMA 3R (outdoor) | 16, 20, 22 | **EGSU200NSEACA** |
| 400 | 120/240 | Yes | 750 kcmil–2<br>300 kcmil–1/0 | 1/2 | 35,000 | — | 50/60 | NEMA 3R (outdoor) | >22 | **EGSU400NSEACA** |

***Notes***

① Standard ATS "EGSX" Series compatible with Eaton generators only.
② Uses CH type circuit breakers.
③ For reference only. Generator size must be determined with proper/actual load calculations.
④ UNIVERSAL ATS: compatible with any single-phase, 120/240 V generator brand.
⑤ Whole house surge Cat. No. CHSPT2ULTRA included in every Green ATS "EGSU" Series.

## ATS Ready Loadcenter

From the far-reaching power failures brought on by hurricanes and snow/ice storms, to the increasing power outage concerns and an aging electrical infrastructure, backup power is more important than ever. Eaton's ATS Ready loadcenter addresses future backup power needs by enabling a fast, efficient installation of an automatic transfer switch kit to convert from utility power to generator power.

The ATS Ready loadcenter gives homebuilders and electrical contractors the flexibility to install a generator ready system or to install a loadcenter and easily add an ATS in the future. Backup power had never been that versatile before.

***ATS Ready Loadcenter Features***

- CH Premium Type 200 A single-phase MCB 36-circuit loadcenter
- 50 A ATS "EGSX" type kit for factory or field installation (compatible with Eaton generators only)
- 22 circuits for non-essential loads and 14 circuits for essential backup power loads
- Versatile, space-saving design
- For use with 8 or 11 kW air-cooled generators
- CH cover included
- Lifetime warranty on CH loadcenter and breakers
- NEMA 1 design
- UL Listed

### ATS Ready Loadcenter

| | Description | Catalog Number |
|---|---|---|
| **CH36B200EGP** | ATS Ready loadcenter<br>Kit CHEGSX50KIT must be ordered separately<br>Loadcenter only. Includes provision for ATS kit | **CH36B200EGP** |
| **CHEGSX50KIT** | ATS "EGSX" kit for ATS Ready loadcenter<br>Field-installable automatic transfer switch kit<br>ATS Ready loadcenter CH36B200EGP must be ordered separately<br>Intuitive, easy installation<br>Compatible with Eaton generators only | **CHEGSX50KIT** |
| **CH36B200EGPK** | ATS Ready LC with factory-installed ATS kit<br>Factory assembled<br>Compatible with Eaton generator only. Generator needed to complete backup power system<br>Recommended Eaton generators models:<br>8/7 kW–Catalog #EGENX8<br>11/10 kW–Catalog #EGENX11A | **CH36B200EGPK** |

## Dimensions

Approximate Dimensions in Inches (mm)

### Automatic Transfer Switches

| Catalog Number | Width | Height | Depth | Weight Lbs (kg) |
|---|---|---|---|---|
| **EGSX50L12** | 14.25 (362.0) | 21.00 (533.4) | 4.00 (101.6) | 25 (11.33) |
| **EGSX50L12R** | 14.25 (362.0) | 21.00 (533.4) | 6.00 (152.4) | 29 (13.15) |
| **EGSX100A** | 14.46 (367.3) | 16.87 (428.5) | 5.32 (135.1) | 25 (11.33) |
| **EGSX100NSEA** | 14.46 (367.3) | 16.87 (428.5) | 5.32 (135.1) | 28 (12.70) |
| **EGSX100L24RA** | 14.46 (367.3) | 29.33 (744.0) | 5.32 (135.1) | 38 (17.24) |
| **EGSX200A** | 14.46 (367.3) | 25.08 (637.0) | 5.25 (133.4) | 35 (15.87) |
| **EGSX150NSEA** | 14.46 (367.3) | 29.20 (741.7) | 5.32 (135.1) | 45 (20.41) |
| **EGSX200NSEA** | 14.46 (367.3) | 29.20 (741.7) | 5.32 (135.1) | 45 (20.41) |
| **EGSU100L24RACA** | 14.46 (367.3) | 29.33 (745.0) | 5.32 (135.1) | 38 (17.24) |
| **EGSU100ACA** | 14.46 (367.3) | 16.87 (428.5) | 5.32 (135.1) | 25 (11.33) |
| **EGSU100NSEACA** | 14.46 (367.3) | 16.87 (428.5) | 5.32 (135.1) | 28 (12.70) |
| **EGSU150NSEACA** | 14.46 (367.3) | 29.20 (741.7) | 5.32 (135.1) | 45 (20.41) |
| **EGSU200ACA** | 14.46 (367.3) | 25.08 (637.0) | 5.25 (133.4) | 35 (15.88) |
| **EGSU200NSEACA** | 14.46 (367.3) | 29.20 (741.7) | 5.32 (135.1) | 45 (20.41) |
| **EGSU400NSEACA** | 23.14 (587.8) | 35.55 (903.0) | 10.00 (254.0) | 120 (54.43) |
| **CH36B200EGPK** | 14.31 (363.5) | 47.50 (1206.5) | 3.88 (98.6) | 40 (18.14) |

**All Panels are Manufactured in the USA and Meet UL 1008**

## Contents


| *Description* | *Page* |
|---|---|
| Manual Transfer Switches | |
| Standards and Certifications | **V1-T3-17** |
| Reference Information | **V1-T3-17** |
| Product Selection | **V1-T3-18** |
| Technical Data and Specifications | **V1-T3-19** |
| Dimensions | **V1-T3-19** |


Learn Online

## Product Description

A manual transfer switch is a device that is mounted next to the loadcenter (distribution panel) in the home or small business. The manual transfer switch is used in conjunction with a portable backup power generator and serves the purpose of turning selected circuits on and off during a power outage. The transfer switch panel allows the owner to start up a generator to restore power to critical circuits when utility power is not available.

The owner designates which circuits are critical, such as the refrigerator and certain lights. Sometimes called emergency power panels or emergency generator panels, manual transfer switch panels provide the homeowner or small business owner with a safe and easy way to continue using electrical appliances when the utility power is unavailable temporarily.

## Application Description

Manual transfer switches are most often used in residential, agricultural and light commercial applications. Comfort and safety are key concerns of many homeowners who are dependent on an uninterrupted supply of electricity.

The increase in our dependence on power is due in part to the popularity of home offices and in-home health care. Various heavily populated regions of the United States experience periodic power outages due to extreme weather conditions, such as ice and snowstorms, heat waves, tornadoes or hurricanes. These regions that include the Pacific Northwest, Atlantic Coast and the Gulf Coast are the strongest markets for portable generators and manual transfer switches.

## Features, Benefits and Functions

Eaton offers two manual transfer switch backup power solutions:

- Manual transfer switches
- Generator panels

### Manual Transfer Switches

- Panel and components sold separately
- Hardwired generator connection
- Ideal for new construction/ larger loads
- Sturdy copper bus construction
- Uses CH and CHT circuit breaker types (sold separately)
- Mechanically interlocked main disconnects to prevent paralleling of normal and emergency power source
- Indoor and outdoor designs available

***Manual Transfer Switch Indoor Design***

***Manual Transfer Switch Indoor/Outdoor Design***

### Generator Panels

- Mechanically interlocked main disconnects prevent paralleling of normal and emergency power source
- Panel and components sold separately
- Integral plug-in generator connection (power inlet box)
- All circuit breakers are included—switching duty rated
- Includes dual wattmeters for load balancing
- Indoor and outdoor designs available

***Generator Panel Indoor Design***

***Generator Panel Outdoor Design***

## Standards and Certifications

- UL 67 listed
- UL 1008 listed

Listed

## Reference Information

### Cross-Reference

| Watts | Number of Circuits | Ampere Rating | Catalog Number Eaton | Gen/Tran ① | EmerGen ① | Square D | Generac ② |
|---|---|---|---|---|---|---|---|
| 5000 | 4–8 | 30 | **CH48GEN3060R** | — | — | QO48M30DSGP | — |
| 15,000 | 8–16 | 60 | **CH816GEN6060** | — | — | QO48M60DSGP | — |
| 5000 | 6 | 20 | **CH6EGEN2060** | 20216 | 6-5000 | — | — |
| 5000 | 6 | 20 | **CH6EGEN2060R** | R20216 | 6-5000 + RTE657 | — | — |
| 5000 | 6 | 20 | **CH6EGEN2060SU** | — | — | — | — |
| 5000 | 6 | 20 | **CH6EGEN2060RSU** | — | — | — | — |
| 7500 | 10 | 30 | **CH10EGEN3060** | 302110-20 | 10-7500 | — | — |
| 7500 | 10 | 30 | **CH10EGEN3060R** | R30211-20 | 10-7500 + RTE1075 | — | — |
| 7500 | 10 | 30 | **CH10EGEN3060SUR** | — | — | — | — |
| 7500 | 10 | 30 | **CH10EGEN3060RSU** | — | — | — | — |
| 7500 | 10 | 30 | **CH10GEN5030SN** | — | — | — | — |
| 7500 | 10 | 30 | **CH10GEN5030RSN** | — | — | — | — |
| 12,000 | 10 | 50 | **CH10GEN5050SN** | — | — | — | — |
| 12,000 | 10 | 50 | **CH10GEN5050RSN** | — | — | — | — |

***Notes***

① Gen/Trans device is not supplied with a power cord.

② Generac device is 7200 maximum watts on six-circuit device and 12,000 maximum watts on 10-circuit device.

## Product Selection

### Manual Transfer Switches and Generator Panels Selection

| Enclosure Type | Watts | Number of Circuits | Ampere Rating | Main/ Emergency Ampere Rating | Feeder Breakers | Included Accessories | Catalog Number |
|---|---|---|---|---|---|---|---|
| **Standard Manual Transfer Switch** | | | | | | | |
| NEMA 3R | 5000 | 4–8 | 30 | Provision | Provision | None | **CH48GEN3060R** |
| NEMA 1 | 10,000 | 8–16 | 60 | Provision | Provision | None | **CH816GEN6060** |
| **Generator Panel** | | | | | | | |
| NEMA 1 | 5000 | 6 | 20 | 60/20 | 5–1P151–1P20 | None | **CH6EGEN2060** |
| NEMA 3R | 5000 | 6 | 20 | 60/20 | 5–1P151–1P20 | None | **CH6EGEN2060R** |
| NEMA 1 | 5000 | 6 | 20 | 60/20 | 5–1P151–1P20 | Two-pole surge protector | **CH6EGEN2060SUR** |
| NEMA 3R | 5000 | 6 | 20 | 60/20 | 5–1P151–1P20 | Two-pole surge protector | **CH6EGEN2060RSU** |
| NEMA 1 | 7500 | 10 | 30 | 60/30 | 6–1P152–1P2012P30 | None | **CH10EGEN3060** |
| NEMA 3R | 7500 | 10 | 30 | 60/30 | 6–1P152–1P2012P30 | None | **CH10EGEN3060R** |
| NEMA 1 | 7500 | 10 | 30 | 60/30 | 7–1P152–1P2012P30 | Two-pole surge protector | **CH10EGEN3060SUR** |
| NEMA 3R | 7500 | 10 | 30 | 60/30 | 7–1P152–1P2012P30 | Two-pole surge protector | **CH10EGEN3060RSU** |
| **Switched Neutral Manual Transfer Switch** | | | | | | | |
| NEMA 1 | 7500 | 10 | 30 | 50/30 | 6–1P15, 2–1P20, 1–2P30 | None | **CH10GEN5030SN** |
| NEMA 3R | 7500 | 10 | 30 | 50/30 | 6–1P15, 2–1P20, 1–2P30 | None | **CH10GEN5030RSN** |
| NEMA 1 | 12,000 | 10 | 50 | 50/50 | 6–1P15, 2–1P20, 1–2P30 | None | **CH10GEN5050SN** |
| NEMA 3R | 12,000 | 10 | 50 | 50/50 | 6–1P15, 2–1P20, 1–2P30 | None | **CH10GEN5050RSN** |

### Power Inlet Boxes

| Description | Ampere Rating | Voltage | Catalog Number |
|---|---|---|---|
| Flush flange kit (for use with generator panel only) | — | 120/240 V | **CHEGENFKIT** |
| Power inlet box | 20 | 120/240 V | **EGSPIB20** |
| Power inlet box | 30 | 120/240 V | **EGSPIB30** |
| Power inlet box | 50 | 120/240 V | **EGSPIB50** |

## Warranty

### Manual Transfer Switch

- 15-year loadcenter warranty
- Lifetime branch breaker warranty

### Generator Panel

- 15-year loadcenter warranty
- Lifetime branch breaker warranty

## Technical Data and Specifications

- 10,000 AIC rating
- Switching devices must be circuit breakers
- Manual transfer switch must be supplied with neutral and ground
- Power inlet box must be connected to a circuit breaker for generator protection

### Installation Diagrams

#### Manual Transfer Switches—Indoor Installation Diagram

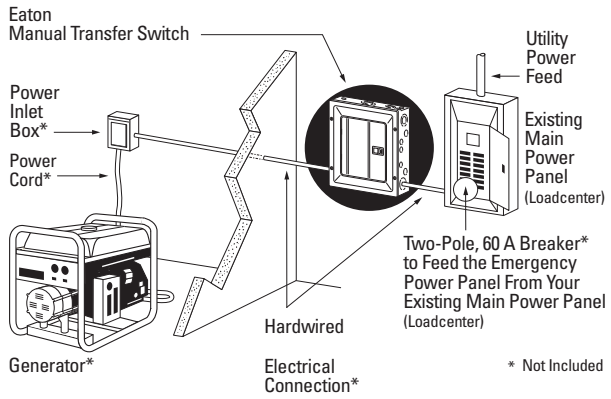


#### Generator Panels—Indoor Installation Diagram

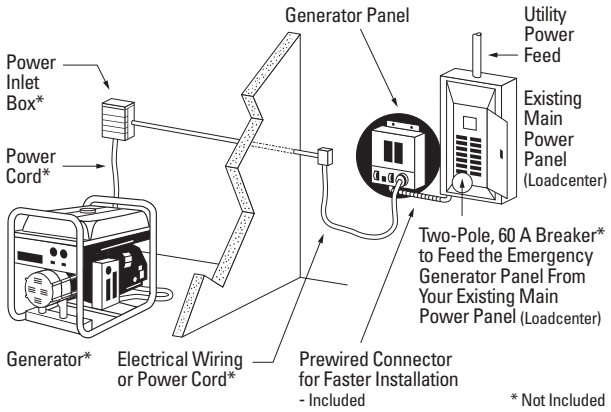


#### Manual Transfer Switches—Outdoor Installation Diagram

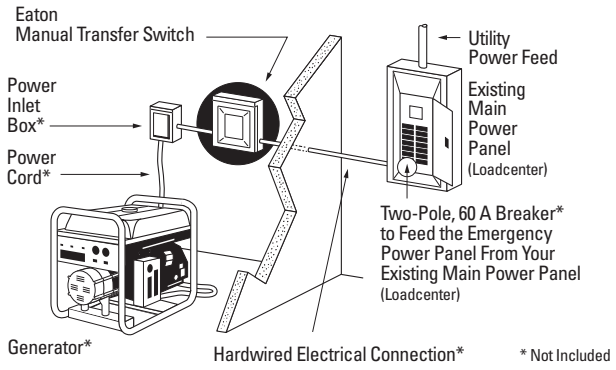


#### Generator Panels—Outdoor Installation Diagram

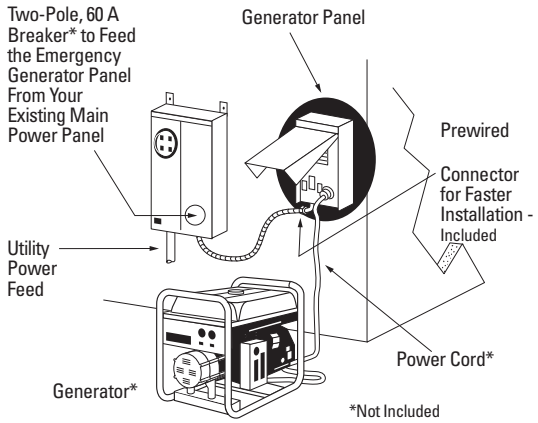


## Dimensions

Approximate Dimensions in Inches (mm)

### Manual Transfer Switch

| Enclosure Type | Height | Width | Depth | Weight Lbs (kg) |
|---|---|---|---|---|
| NEMA 1 | 16.75 (425.5) | 14.31 (363.5) | 3.88 (98.5) | 25 (11) |
| NEMA 3R | 13.00 (330.2) | 11.00 (279.4) | 3.56 (90.4) | 14 (6) |

### Generator Panel

| Enclosure Type | Height | Width | Depth | Weight Lbs (kg) 6-Circuit | Weight Lbs (kg) 10-Circuit |
|---|---|---|---|---|---|
| NEMA 1 | 13.23 (336.0) | 11.41 (289.8) | 4.10 (104.1) | 24 (11) | 26 (12) |
| NEMA 3R | 17.12 (434.8) | 9.45 (240.0) | 7.16 (181.9) | 29 (13) | 31 (14) |

Group Metering and
Meter Breaker Family

**4.1 Single Meter Sockets**
Product Description . . . . . V1-T4-2

**4.2 Commercial Lever Bypass Sockets**
Product Description . . . . . V1-T4-10

**4.3 Multiple Position Horizontal Ganged Sockets**
Product Description . . . . . V1-T4-18

**4.4 Instrument Rated Sockets**
Product Description . . . . . V1-T4-25

**4.5 Residential Pedestals**
Product Description . . . . . V1-T4-27

**4.6 Accessories and Cross-Reference**
Product Description . . . . . V1-T4-29

**4.7 Mechanical Lugs**
Product Description . . . . . V1-T4-34

**4.8 Communications Grounding Device (NEC 250.94)**
Product Description . . . . . V1-T4-35

**4.9 Meter Breakers**
Residential Meter Breakers . . . . . V1-T4-37
Non-EUSERC Combination Service Entrance Devices 100–200 A Styles V1-T4-39
Meets EUSERC Requirements Service Entrance Devices 100–225 A . V1-T4-48
West Coast All-In-One Design . . . . . V1-T4-59
Mechanical Interlock Cover . . . . . V1-T4-65
House Panels . . . . . V1-T4-75
Commercial Safety Sockets . . . . . V1-T4-83
CH Style Renovation Solutions . . . . . V1-T4-86
Aluminum Meter Breakers . . . . . V1-T4-87

**4.10 Group Metering**
Systems for Residential and Commercial Applications . . . . . V1-T4-88
Meter Packs . . . . . V1-T4-90
Type CCV 120/240 V Tenant Main Circuit Breaker . . . . . V1-T4-95
Type CV 120/240 V Tenant Main Circuit Breaker . . . . . V1-T4-96
Meter Packs—1MP, 1MM and 3MM Main Tenant Circuit Breakers . . . V1-T4-98
Main Service Modules . . . . . V1-T4-101
Surge Metering . . . . . V1-T4-115
Group Metering Inline Current Transformer Cabinets . . . . . V1-T4-116
Residential Meter Stacks . . . . . V1-T4-118
1MP, 1MM and 3MM Main Tenant Circuit Breakers . . . . . V1-T4-127
Phase Balanced Stack . . . . . V1-T4-128
Commercial Meter Stack Modules . . . . . V1-T4-129
35MM, 37MM, 35SS and 37SS Main Tenant Circuit Breakers . . . . . V1-T4-136


Learn
Online

Single Meter Sockets

## Contents


| *Description* | *Page* |
|---|---|
| Features and Benefits | **V1-T4-3** |
| Catalog Number Selection | **V1-T4-3** |
| Product Selection | **V1-T4-4** |
| Dimensions | **V1-T4-8** |


## Product Description

### Single-Phase Three-Wire and Three-Phase Four-Wire 600 Vac Single Meter Sockets

All Eaton sockets are rated 600 Vac maximum and either 100, 200 or 320 A continuous. All have a minimum short-circuit rating of 10,000 rms symmetrical amperes (watthour meter is not included in rating).

All single meter sockets are UL labeled and are supplied in surface mounted outdoor enclosures. Confirm local utility acceptance prior to order entry.

## Features and Benefits

### Single Meter Sockets

| Features | Benefits |
|---|---|
| Block assembly base exceeds 400 in-lbs of torque | Provides durability under the most extreme installation circumstances |
| One-piece, die-run enclosure | Eliminates tampering and extends product life |
| High visibility Eaton name embossed on cover | Company identity and brand preference |
| Knockouts are installer friendly | Labor savings, less time needed for removing knockouts |
| Oversized 7/8-inch diameter, heavy-duty, steel lug screws | Stronger connection component facilitates a reliable wire termination |
| Slide-nuts are captive | Allow for ease in installation of conductors and eliminates lost components |
| Horn bypass kit is field installable by changing out slide nut | Less inventory required and field modifications are simple |
| Integral triplex or quadplex ground extruded in neutral lug | One piece for terminating incoming/outgoing neutral conductors, which increases integrity of connections |
| 100% plated bridge with 4-point mounting | Zinc chromate plated to provide superior corrosion resistance |
| kAIC rating | Tested and UL listed up to 200 kAIC rating with specified overcurrent protection devices |
| Provides a complete Eaton residential solution | Adding meter sockets to the already existing (loadcenter, surge, breakers, generators and AC disconnect) product lines that we already provide, makes Eaton a one-stop shop for our customers residential and light commercial needs |
| Copper-plated alloy jaws with reinforcing spring | Steel reinforcing springs used in all socket jaws to maintain electrical connections |

## Catalog Number Selection

### Single Meter Sockets RS Group

**UT RS 2 0 2 B CH**

**Note:** The "U" prefix is always used first followed by other prefixes required in alphabetical order.

**Standard Prefixes**

- **A** = Aluminum enclosure
- **B** = Barrel lock provision, for an exposed INNER-TITE® or Brooks barrel lock; unit includes an internal lock receiver bracket
- **F** = Barrel Lock with guard provision, for a lock guard INNER-TITE or Brooks barrel lock; unit includes an internal lock receiver bracket
- **G** = Grounded fifth terminal (9 o'clock position)
- **H** = Horn bypass
- **I** = Inhibitor installed in wire connectors
- **M** = Temporary meter cover (waxed cardboard)
- **N** = No sealing ring (applies only to ring style sockets)
- **R** = Ring style socket
- **S** = Aluminum screw type sealing ring (applies only to ring style sockets)
- **T** = Grounding connector (#14–#2 Cu) for triplex ground
- **TT** = Two grounding connectors (#14–#2 Cu) for quadplex ground
- **U** = UL Underwriters Laboratories label
- **Z** = 5/16-inch hex head connector screw in place of slotted (100 A only)

**Product Group**

- **RS** = Residential service, single position
- **2R-6R** = Residential service, multiple position
- **2H-6H** = Commercial or residential service, multiple position
- **H** = Commercial or residential service, single position

**Ampere Rating**

- **1** = 100 A
- **2** = 200 A
- **5** = 150 A

**Service Design**

- **0** = Overhead
- **1** = Combination overhead/underground
- **2** = Underground, side wired
- **3** = Combination overhead/underground, side wired

**Maximum Conductor (Line and Load)**

- **0** = 0.38-inch stud connectors
- **1** = #2/0 connectors
- **2** = #250 kcmil connectors
- **3** = #350 kcmil connectors

**Standard Suffixes**

- **A** = Solid top
- **B** = Small hub opening
- **C** = Small hub closing plate mounted
- **L** = 1.25-inch (31.8 mm) hub mounted
- **M** = 1.50-inch (38.1 mm) hub mounted
- **N** = 2.00-inch (50.8 mm) hub mounted
- **P** = 2.50-inch (63.5 mm) hub mounted
- **T** = Large hub opening hub
- **U** = Large hub cover plate hub mounted
- **V** = 2.50-inch (63.5 mm) large hub mounted
- **Q** = 3.00-inch (76.2 mm) large hub mounted
- **R** = 3.50-inch (88.9 mm) large hub mounted
- **S** = 4.00-inch (101.6 mm) large hub mounted
- **Z** = Large to small hub adapter mounted

## Product Selection

URS212ACH

### Residential Ringless Type Cover

| Ampere Rating | Jaws | Service | Bypass | Connections Line | Load | Opening, Hub or Closure Plate | Catalog Number |
|---|---|---|---|---|---|---|---|
| 200 | 4 | UG | — | 3/8-inch studs | 3/8-inch studs | Solid top | **UTRS240ACH** |
| 200 | 4 | OH/UG | — | 3/8-inch studs | 3/8-inch studs | 3-5/16 hub cover plate | **UTRS2303CCH** |
| 200 | 4 | UG | — | #8–350 kcmil | #8–350 kcmil | Solid top | **UTRS223ACH** |
| 200 | 4 | UG | — | 3/8-inch studs | 3/8-inch studs | Solid top | **UTRS220ACH** |
| 200 | 4 | OH/UG | — | #8–350 kcmil | #8–350 kcmil | 3-5/16 cover plate | **UTRS213CFLCH** |
| 200 | 4 | OH/UG | — | #8–350 kcmil | #8–350 kcmil | 3-5/16 hub cover plate | **UTRS213CEPCH** |
| 200 | 4 | OH/UG | — | #6–350 kcmil | #6–350 kcmil | 3-5/16 hub cover plate | **UGTRS213CE** |
| 200 | 4 | OH/UG | — | #6–350 kcmil | #6–350 kcmil | 3-5/16 hub cover plate | **UTRS213CE** |
| 200 | 4 | OH/UG | — | #6–350 kcmil | #6–350 kcmil | 3-5/16 hub opening | **UATRS213BCH** |
| 200 | 4 | OH/UG | — | #6–350 kcmil | #6–350 kcmil | 3-5/16 hub opening | **URS213BCH** |
| 200 | 4 | OH/UG | — | #6–350 kcmil | #6–350 kcmil | 3-5/16 hub opening | **UTRS213BE** |
| 200 | 4 | UG | — | #8–350 kcmil | #8–350 kcmil | Solid top | **UTRS213AFLCH** |
| 200 | 4 | UG | — | #8–350 kcmil | #8–350 kcmil | Solid top | **UTRS213ACH** |
| 200 | 4 | OH/UG | Horn | #8–350 kcmil | #8–350 kcmil | 3-5/16 hub opening | **UTRS2138BCH** |
| 200 | 4 | OH/UG | — | #8–250 kcmil | #8–250 kcmil | Solid top | **UTRS212ACH** |
| 200 | 4 | OH/UG | — | #8–250 kcmil | #8–250 kcmil | 3-5/16 cover plate | **UTRS212CCH** |
| 200 | 4 | OH/UG | — | #8–250 kcmil | #8–250 kcmil | 3-5/16 cover plate | **UTRS212CFLCH** |
| 200 | 4 | OH/UG | — | #8–250 kcmil | #8–250 kcmil | 3-5/16 hub opening | **UTRS212BCH** |
| 200 | 4 | OH | — | #8–250 kcmil | #8–250 kcmil | 2-inch bolt-on hub | **UTRS202NCH** |
| 200 | 4 | OH | — | #8–250 kcmil | #8–250 kcmil | Small hub opening | **UATRS202BFLCH** ① |
| 200 | 4 | OH/UG | — | #8–250 kcmil | #8–250 kcmil | 3-5/16 cover plate | **UTRS232CCH** |
| 200 | 4 | OH | — | #8–2/0 cu/al | #8–2/0 cu/al | 3-5/16 hub opening | **UTRS202BCH** |
| 200 | 4 | OH/UG | — | #8–250 kcmil | #8–250 kcmil | Solid top | **URS212ACH** |
| 200 | 4 | OH | — | #8–250 kcmil | #8–250 kcmil | 2-inch bolt-on hub | **URS202NCH** |
| 200 | 5 | OH | Horn | #8–250 kcmil | #8–250 kcmil | 3-5/16 hub opening | **URS202BDQCH** |
| 200 | 4 | OH/UG | Horn | #8–350 kcmil | #8–350 kcmil | 3-5/16 hub cover plate | **UFHTRS213CCH** ② |
| 200 | 4 | OH/UG | Horn | #8–350 kcmil | #8–350 kcmil | 3-5/16 hub opening | **UHTTRS213BCH** |
| 200 | 4 | OH/UG | Horn | #8–350 kcmil | #8–350 kcmil | 3-5/16 hub cover plate | **UHTTRS213CCH** |
| 200 | 4 | OH | Horn | #8–250 kcmil | #8–250 kcmil | 3-5/16 hub opening | **UHTTRS202BCH** |
| 200 | 5 | OH/UG | Horn | #8–350 kcmil | #8–350 kcmil | 3-5/16 hub cover plate | **UHTRS233CCH** |
| 200 | 4 | UG | Horn | #8–350 kcmil | #8–350 kcmil | Solid top | **UHTRS223ARHCH** |
| 200 | 4 | UG | Horn | #8–350 kcmil | #8–350 kcmil | Solid top | **UFHTRS223ACH** |
| 200 | 5 | UG | Horn | #8–350 kcmil | #8–350 kcmil | Solid top | **UGHTRS223ACH** |
| 200 | 4 | UG | Horn | #8–350 kcmil | #8–350 kcmil | Solid top | **UHTTRS223ACH** |
| 200 | 4 | UG | Horn | #8–350 kcmil | #8–350 kcmil | Solid top | **UHTRS223ACH** |
| 200 | 4 | OH/UG | Horn | #6–350 kcmil | #6–350 kcmil | 3-5/16 hub opening | **UHTRS213CE** |
| 200 | 4 | OH/UG | Horn | #6–350 kcmil | #6–350 kcmil | 3-5/16 hub opening | **UHTRS213BE** |
| 200 | 4 | OH/UG | Horn | #8–350 kcmil | #8–350 kcmil | Solid top | **UHTRS213AE** |
| 200 | 4 | OH | Horn | #8–350 kcmil | #8–350 kcmil | 3-5/16 hub opening | **UHTRS203BCH** |
| 200 | 4 | OH | Horn | #8–250 kcmil | #8–250 kcmil | 3-5/16 hub opening | **UHTRS202BCH** |
| 200 | 4 | OH/UG | None | #8–250 kcmil | #8–250 kcmil | 2-inch bolt-on hub | **URS202NPECCH** ③ |

***Notes***

① Aluminum enclosure.
② Barrel lock.
③ PEC approved.

For dimensions, see **Pages V1-T4-8** and **V1-T4-9**.

## Residential Ringless Type Cover, continued

| Ampere Rating | Jaws | Service | Bypass | Connections Line | Load | Opening, Hub or Closure Plate | Catalog Number |
|---|---|---|---|---|---|---|---|
| 200 | 4 | OH/UG | Horn | #8–350 kcmil | #8–350 kcmil | Solid top | **UHIRS223ACVCH** |
| 200 | 4 | OH/UG | Horn | #8–350 kcmil | #8–350 kcmil | 3-5/16 hub opening | **UHIRS213BCVCH** |
| 200 | 5 | OH/UG | — | #6–350 kcmil | #6–350 kcmil | Closure plate | **UGTRS213CE** |
| 200 | 5 | OH/UG | — | #6–350 kcmil | #6–350 kcmil | Hub opening | **UGTRS213BE** |
| 200 | 5 | OH/UG | Horn | #6–350 kcmil | #6–350 kcmil | Closure plate | **786685217918** |
| 200 | 5 | OH/UG | Horn | #6–350 kcmil | #6–350 kcmil | 3-5/16 hub opening | **UGHTRS213BE** |
| 200 | 5 | OH/UG | Horn | #8–250 kcmil | #8–250 kcmil | 3-5/16 hub cover plate | **UGHRS212CKCCH** |
| 200 | 4 | OH | — | #8–250 kcmil | #8–250 kcmil | 3-5/16 hub opening | **UFTRS202BCH** |
| 200 | 4 | OH | Horn | #8–250 kcmil | #8–250 kcmil | 3-5/16 hub opening | **UFHTRS202BCH** |
| 200 | 4 | UG | Horn | #8–350 kcmil | #8–350 kcmil | Solid top | **UBHTRS223ARHCH** |
| 200 | 4 | UG | Horn | #8–350 kcmil | #8–350 kcmil | Solid top | **UBHRS223ACH** |
| 200 | 4 | OH | Horn | #8–250 kcmil | #8–250 kcmil | 3-5/16 hub cover plate | **UBHRS202BCH** |
| 200 | 4 | OH/UG | — | #8–350 kcmil | #8–350 kcmil | 3-5/16 hub opening | **UATRS213CFLCH** |
| 200 | 4 | OH/UG | Horn | #8–350 kcmil | #8–350 kcmil | 3-5/16 hub cover plate | **UAHTRS233CSHCH** |
| 200 | 4 | UG | Horn | #8–350 kcmil | #8–350 kcmil | Solid top | **UAHTRS223AFLCH** |
| 200 | 4 | OH | Horn | #8–250 kcmil | #8–250 kcmil | 3-5/16 hub opening | **UAHTRS202BFLCH** |
| 200 | 4 | OH/UG | — | #8–350 kcmil | #8–350 kcmil | 3-5/16 hub closure plate | **U92197CCCPLCH** |
| 200 | 4 | OH/UG | — | #8–350 kcmil | #8–350 kcmil | 3-5/16 hub closure plate | **1009928CH** |
| 200 | 4 | OH/UG | Horn | #8–250 kcmil | #8–250 kcmil | Solid top | **1009874ACH** |
| 200 | 4 | UG | — | 3/8-inch studs | 3/8-inch studs | Solid top | **1009046CH** |
| 200 | 4 | UG | Horn | #8–350 kcmil | #8–350 kcmil | Solid top | **1008941CH** |
| 200 | 4 | UG | Horn | #8–350 kcmil | #8–350 kcmil | Solid top | **1008940CH** |
| 200 | 4 | UG | Horn | #8–350 kcmil | #8–350 kcmil | Solid top | **1008827CH** |
| 200 | 4 | UG | Horn | #8–350 kcmil | #8–350 kcmil | Solid top | **1008819CH** |
| 200 | 4 | UG | Horn | #8–350 kcmil | #8–350 kcmil | Solid top | **1008717CH** |
| 200 | 4 | UG | — | #8–350 kcmil | #8–350 kcmil | Solid top | **1008617CH** |
| 200 | 4 | OH/UG | Horn | #8–350 kcmil | #8–350 kcmil | 3-5/16 hub opening | **1007817CH** |
| 200 | 4 | OH | Horn | #8–250 kcmil | #8–250 kcmil | 3-5/16 hub opening | **1007699CH** |
| 200 | 4 | OH | Horn | #8–250 kcmil | #8–250 kcmil | 3-5/16 hub opening | **1007665CH** |
| 200 | 4 | UG | Horn | #8–350 kcmil | #8–350 kcmil | Solid top | **1007588CH** |
| 200 | 4 | OH/UG | — | 3/8-inch studs | 3/8-inch studs | 3-5/16 hub opening | **1007448ACH** |
| 200 | 4 | UG | Horn | #8–350 kcmil | #8–350 kcmil | Solid top | **1004884ARHCH** ① |
| 200 | 4 | UG | Horn | #8–350 kcmil | #8–350 kcmil | Solid top | **1004884ACH** |
| 200 | 4 | OH/UG | — | #8–#250 kcmil | #8–#250 kcmil | 3-5/16 hub cover plate | **1004710ECH** |
| 200 | 4 | OH | — | N/A | N/A | N/A | **1004709DCH** |
| 200 | 4 | OH | Horn | #8–#250 kcmil | #8–#250 kcmil | 2-inch bolt-on hubs | **1004455BCH** |
| 200 | 4 | OH | Horn | #8–250 kcmil | #8–250 kcmil | 3-5/16 hub opening | **1004161ACH** |
| 200 | 4 | OH/UG | Horn | #8–350 kcmil | #8–350 kcmil | 3-5/16 hub opening | **1004159ACH** |
| 200 | 4 | OH/UG | — | #8–350 kcmil | #8–350 kcmil | Hub closure plate | **1008826ACH** ② |
| 200 | 4 | OH/UG | Lever | #6–350 kcmil | #6–350 kcmil | Hub closure plate | **1006352CCH** ② |
| 200 | 5 | OH | Horn | #8–250 kcmil | #8–250 kcmil | 3-5/16 hub opening | **1003879ACH** |
| 200 | 5 | OH/UG | Horn | #8–350 kcmil | #8–350 kcmil | 3-5/16 hub opening | **1003878ACH** |

***Notes***

① Right hand incoming.

② Austin Energy approved.

For dimensions, see **Pages V1-T4-8** and **V1-T4-9**.

URS101BCH

## Residential Ringless Type Cover, continued

| Ampere Rating | Jaws | Service | Bypass | Connections Line | Load | Opening, Hub or Closure Plate | Catalog Number |
|---|---|---|---|---|---|---|---|
| 150 | 4 | OH/UG | — | #8–2/0 AWG | #8–2/0 AWG | Hub closure plate | **1004326DCH** ① |
| 150 | 4 | OH/UG | — | #8–250 kcmil | #8–250 kcmil | Hub opening | **UTRS502BCH** |
| 150 | 4 | OH | — | #8–250 kcmil | #8–250 kcmil | 3-5/16 hub opening | **UTRS502BCH** |
| 150 | 4 | OH | — | #8–250 kcmil | #8–250 kcmil | 3-5/16 hub cover plate | **UTRS502CCH** |
| 125 | 4 | UG | — | N/A | N/A | N/A | **1006385BCH** |
| 125 | 4 | OH/UG | — | #8–2/0 cu/al | #8–2/0 cu/al | 3-5/16 hub opening | **UTRS111BCH** |
| 125 | 4 | OH | — | #8–2/0 cu/al | #8–2/0 cu/al | 3-5/16 hub opening | **UBTRS101BCH** |
| 125 | 4 | OH | — | #8–2/0 cu/al | #8–2/0 cu/al | 1-1/4-inch bolt-on hub | **UTRS101LCH** |
| 125 | 4 | OH | — | #8–2/0 cu/al | #8–2/0 cu/al | 3-5/16 hub cover plate | **UTRS101CE** |
| 125 | 4 | OH | — | #8–2/0 cu/al | #8–2/0 cu/al | 3-5/16 hub opening | **UTRS101BE** |
| 125 | 4 | OH | — | #8–2/0 | #8–2/0 | 3-5/16 hub cover plate | **URS101CCPLCH** |
| 125 | 4 | OH | Horn | cu/al with 1/2-inch hex head wire clamping screw | cu/al with 1/2-inch hex head wire clamping screw | 3-5/16 hub cover plate | **URS101BDQCH** |
| 125 | 4 | OH | — | #8–2/0 | #8–2/0 | 3-5/16 hub opening | **URS101BCPLCH** |
| 125 | 4 | OH | — | #8–2/0 | #8–2/0 | 3-5/16 hub opening | **URS101BCH** |
| 125 | 4 | OH | Horn | #8–2/0 | #8–2/0 | 3-5/16 hub opening | **UHTTRS101BCH** |
| 125 | 4 | OH/UG | Horn | #8–250 kcmil | #8–250 kcmil | 3-5/16 hub opening | **UHTRS111BCH** |
| 125 | 4 | OH | Horn | #8–2/0 | #8–2/0 | 1.25-inch hub mounted | **UHTRS101LCH** |
| 125 | 4 | OH | Horn | #8–2/0 | #8–2/0 | Closure plate | **UHTRS101CE** |
| 125 | 4 | OH | Horn | #8–2/0 | #8–2/0 | 3-5/16 hub opening | **UHTRS101BE** |
| 125 | 5 | OH/UG | — | #8–2/0 | #8–2/0 | 3-5/16 hub cover plate | **UGRS10101CKCCH** |
| 125 | 5 | OH/UG | — | #8–2/0 | #8–2/0 | 3-5/16 hub cover plate | **UGHTRS111CCH** |
| 125 | 5 | OH | — | #8–2/0 | #8–2/0 | 3-5/16 hub opening | **UGHTRS101BCH** |
| 125 | 4 | OH | — | #8–2/0 | #8–2/0 | 3-5/16 hub cover plate | **UBHRS101BCH** |
| 125 | 4 | OH/UG | — | #8–2/0 | #8–2/0 | 3-5/16 hub cover plate | **UATZRS101CFLCH** |
| 125 | 4 | OH | — | #8–2/0 | #8–2/0 | 3-5/16 hub cover plate | **UATRS101CCH** |
| 125 | 4 | OH | — | #8–2/0 | #8–2/0 | 3-5/16 hub opening | **1008947CH** |
| 125 | 4 | UG | N/A | N/A | N/A | N/A | **1005826ACH** |
| 125 | 4 | OH | — | #8–2/0 | #8–2/0 | 1-1/4-inch bolt-on hub | **1004931BCH** |
| 125 | 4 | OH | — | #8–2/0 | #8–2/0 | 3-5/16 hub opening | **1004162ACH** |
| 125 | 5 | OH | — | #8–2/0 | #8–2/0 | 3-5/16 hub opening | **1003880ACH** |
| 125 | 4 | OH | — | #8–2/0 | #8–2/0 | 3-5/16 hub opening | **UTZRS101BFLCH** |
| 125 | 4 | OH | — | #8–2/0 | #8–2/0 | 3-5/16 hub closure plate | **UTZRS101CFLCH** |
| 125 | 5 | OH | Horn | #8–2/0 | #8–2/0 | Hub opening | **UTRS101CEPSEG** ② |
| 100 | 4 | OH | — | #8–2/0 | #8–2/0 | 3-5/16 hub opening | **1009079CH** |
| 200 | 5 | OH/UG | Horn | #8–350 kcmil | #8–350 kcmil | Hub closure plate | **UTRS213CEPSEG** ② |

***Notes***

① Austin Energy approved.

② PSE&G approved.

For dimensions, see **Pages V1-T4-8** and **V1-T4-9**.

## Residential Ring Type Cover

| Ampere Rating | Jaws | Service | Connections Line | Load | Opening, Hub or Closure Plate | Catalog Number |
|---|---|---|---|---|---|---|
| 200 | 4 | UG | #8–350 kcmil | #8–350 kcmil | Solid top | **URTRS223ACH** |
| 200 | 4 | OH/UG | #8–350 kcmil | #8–350 kcmil | 3-5/16 hub cover plate | **URRS213CCH** |
| 200 | 4 | OH/UG | #8–350 kcmil | #8–350 kcmil | 2 inch hub mounted | **URTRS213NEUSCH** |
| 200 | 4 | OH/UG | #8–350 kcmil | #8–350 kcmil | 3-5/16 hub cover plate | **URTRS213CEUSCH** |
| 200 | 4 | OH/UG | #8–350 kcmil | #8–350 kcmil | 3-5/16 hub cover plate | **1009424CH** |
| 200 | 4 | OH/UG | #8–350 kcmil | #8–350 kcmil | Knockouts | **1009449CH** |
| 200 | 4 | OH | #8–350 kcmil | #8–350 kcmil | 3-5/16 hub opening | **URSTRS203BCH** |
| 200 | 4 | OH | #8–250 kcmil | #8–250 kcmil | 3-5/16 hub cover plate | **URS212BCRCH** |
| 200 | 4 | OH/UG | #8–250 kcmil | #8–250 kcmil | 3-5/16 hub cover plate | **URTRS202BCH** |
| 200 | 4 | OH | #8–250 kcmil | #8–250 kcmil | 3-5/16 hub opening | **URTRS213BE** |
| 200 | 4 | OH/UG | #6–350 kcmil | #6–350 kcmil | Hub opening | **URTRS202BCH** |
| 200 | 4 | OH/UG | #6–350 kcmil | #6–350 kcmil | Closure plate | **URTRS213CE** |
| 200 | 4 | UG | #6–350 kcmil | #6–350 kcmil | 3-5/16 hub opening | **URTRS213BEUSCH** |
| 200 | 4 | OH | #8–250 kcmil | #8–250 kcmil | 2-inch hub mounted | **URTRS202NEUSCH** |
| 200 | 4 | OH | #8–250 kcmil | #8–250 kcmil | 3-5/16 hub opening | **UNRRS202BEUSCH** |
| 200 | 4 | OH/UG | #6–350 kcmil | #6–350 kcmil | Closure plate | **UNRRS213CEUSE** |
| 200 | 4 | OH | #8–250 kcmil | #8–250 kcmil | Hub opening | **UNRRS213BEUSE** |
| 200 | 4 | UG | #6–350 kcmil | #6–350 kcmil | Solid top | **UNRRS213AEUSE** |
| 200 | 4 | OH/UG | #6–250 kcmil | #6–250 kcmil | 5x5 hub opening 3-5/16 adapter plate | **1009097CH** |
| 125 | 4 | OH | #8–2/0 cu/al | #8–2/0 cu/al | 3-5/16 hub opening | **URS101BCRCH** |
| 125 | 4 | OH | #8–2/0 cu/al | #8–2/0 cu/al | 1-1/4-inch bolt-on hub | **URRS101LCH** |
| 125 | 4 | OH | #8–2/0 cu/al | #8–2/0 cu/al | Hub cover plate | **URTRS101BE** |
| 125 | 4 | OH | #8–2/0 cu/al | #8–2/0 cu/al | Hub cover plate | **URTRS101CE** |
| 125 | 4 | OH | #8–2/0 cu/al | #8–2/0 cu/al | 3-5/16 hub cover plate | **UNRRS101BEUSE** |
| 125 | 4 | OH | #8–2/0 cu/al | #8–2/0 cu/al | Closure plate | **UNRRS101CEUSE** |
| 125 | 4 | OH/UG | #8–2/0 cu/al | #8–2/0 cu/al | 3-5/16 hub cover plate | **UNRRS111BEUSE** |
| 125 | 4 | UG | #8–2/0 cu/al | #8–2/0 cu/al | Solid top | **UNRRS111AEUSE** |
| 125 | 4 | OH | #8–2/0 cu/al | #8–2/0 cu/al | 3-5/16 hub opening | **URSTRS101BCH** |

***Note***

For dimensions, see **Pages V1-T4-8** and **V1-T4-9**.

## Dimensions

Approximate Dimensions in Inches (mm)

### Residential Ringless Type Cover

| Catalog Number | Height | Width | Depth |
|---|---|---|---|
| UTRS240ACH | 18.63 (473.2) | 13.00 (330.2) | 4.94 (125.5) |
| UTRS2303CCH | 20.00 (508.0) | 13.00 (330.2) | 4.94 (125.5) |
| UTRS223ACH | 13.00 (330.2) | 13.00 (330.2) | 4.94 (125.5) |
| UTRS220ACH | 15.13 (384.3) | 13.00 (330.2) | 4.94 (125.5) |
| UTRS213CFLCH | 15.00 (381.0) | 11.00 (279.4) | 4.37 (111.0) |
| UTRS213CEPCH | 15.00 (381.0) | 11.00 (279.4) | 4.37 (111.0) |
| UGTRS213CE | 15.13 (384.3) | 11.25 (285.8) | 4.50 (114.3) |
| UTRS213CE | 15.13 (384.3) | 11.25 (285.8) | 4.50 (114.3) |
| UATRS213BCH | 15.13 (384.3) | 11.25 (285.8) | 4.50 (114.3) |
| URS213BCH | 15.00 (381.0) | 11.00 (279.4) | 4.36 (110.7) |
| UTRS213BE | 15.13 (384.3) | 11.25 (285.8) | 4.50 (114.3) |
| UTRS213AFLCH | 15.00 (381.0) | 11.00 (279.4) | 4.37 (111.0) |
| UTRS213ACH | 15.00 (381.0) | 11.00 (279.4) | 4.36 (110.7) |
| UTRS2138BCH | 20.00 (508.0) | 13.00 (330.2) | 4.94 (125.5) |
| UTRS212ACH | 14.00 (355.6) | 11.00 (279.4) | 4.37 (111.0) |
| UTRS212CCH | 14.00 (355.6) | 11.00 (279.4) | 4.36 (110.7) |
| UTRS212CFLCH | 14.00 (355.6) | 11.00 (279.4) | 4.36 (110.7) |
| UTRS212BCH | 14.00 (355.6) | 11.00 (279.4) | 4.36 (110.7) |
| UTRS202NCH | 14.00 (355.6) | 8.00 (203.2) | 4.36 (110.7) |
| UATRS202BFLCH ① | 14.00 (355.6) | 8.00 (203.2) | 4.36 (110.7) |
| UTRS232CCH | 17.12 (434.8) | 13.00 (330.2) | 4.93 (125.2) |
| UTRS202BCH | 14.00 (355.6) | 8.00 (203.2) | 4.36 (110.7) |
| URS212ACH | 14.00 (355.6) | 11.00 (279.4) | 4.38 (111.3) |
| URS202NCH | 14.00 (355.6) | 8.00 (203.2) | 4.38 (111.3) |
| URS202BDQCH | 14.00 (355.6) | 8.00 (203.2) | 4.38 (111.3) |
| UFHTRS213CCH ② | 15.00 (381.0) | 11.00 (279.4) | 4.38 (111.3) |
| UHTTRS213BCH | 15.00 (381.0) | 11.00 (279.4) | 4.38 (111.3) |
| UHTTRS213CCH | 15.00 (381.0) | 11.00 (279.4) | 4.38 (111.3) |
| UHTTRS202BCH | 14.00 (355.6) | 8.00 (203.2) | 4.38 (111.3) |
| UHTRS233CCH | 17.13 (435.1) | 13.00 (330.2) | 4.94 (125.5) |
| UHTRS223ARHCH | 13.00 (330.2) | 13.00 (330.2) | 4.94 (125.5) |
| UFHTRS223ACH | 13.00 (330.2) | 13.00 (330.2) | 4.94 (125.5) |
| UGHTRS223ACH | 13.00 (330.2) | 13.00 (330.2) | 4.94 (125.5) |
| UHTTRS223ACH | 13.00 (330.2) | 13.00 (330.2) | 4.94 (125.5) |
| UHTRS223ACH | 13.00 (330.2) | 13.00 (330.2) | 4.94 (125.5) |
| UHTRS213CE | 15.00 (381.0) | 11.00 (279.4) | 4.38 (111.3) |
| UHTRS213BE | 15.00 (381.0) | 11.00 (279.4) | 4.38 (111.3) |
| UHTRS213AE | 15.00 (381.0) | 11.00 (279.4) | 4.38 (111.3) |
| UHTRS203BCH | 15.00 (381.0) | 8.00 (203.2) | 4.38 (111.3) |
| UHTRS202BCH | 14.00 (355.6) | 8.00 (203.2) | 4.38 (111.3) |
| UHIRS223ACVCH | 13.00 (330.2) | 13.00 (330.2) | 4.94 (125.5) |

### Residential Ringless Type Cover, continued

| Catalog Number | Height | Width | Depth |
|---|---|---|---|
| UHIRS213BCVCH | 15.00 (381.0) | 11.00 (279.4) | 4.38 (111.3) |
| UGTRS213CE | 15.13 (384.3) | 11.25 (285.8) | 4.50 (114.3) |
| UGTRS213BE | 15.13 (384.3) | 11.25 (285.8) | 4.50 (114.3) |
| 786685217918 | 15.13 (384.3) | 11.25 (285.8) | 4.50 (114.3) |
| UGHTRS213BE | 15.13 (384.3) | 11.25 (285.8) | 4.50 (114.3) |
| UGHRS212CKCCH | 14.00 (355.6) | 11.00 (279.4) | 4.38 (111.3) |
| UFTRS202BCH | 14.00 (355.6) | 8.00 (203.2) | 4.38 (111.3) |
| UFHTRS202BCH | 14.00 (355.6) | 8.00 (203.2) | 4.38 (111.3) |
| UBHTRS223ARHCH | 13.00 (330.2) | 13.00 (330.2) | 4.94 (125.5) |
| UBHRS223ACH | 13.00 (330.2) | 13.00 (330.2) | 4.94 (125.5) |
| UBHRS202BCH | 14.00 (355.6) | 8.00 (203.2) | 4.38 (111.3) |
| UATRS213CFLCH | 15.00 (381.0) | 11.00 (279.4) | 4.38 (111.3) |
| UAHTRS233CSHCH | 17.13 (435.1) | 13.00 (330.2) | 4.94 (125.5) |
| UAHTRS223AFLCH | 13.00 (330.2) | 13.00 (330.2) | 4.94 (125.5) |
| UAHTRS202BFLCH | 14.00 (355.6) | 8.00 (203.2) | 4.38 (111.3) |
| U92197CCCPLCH | 14.13 (358.9) | 13.00 (330.2) | 4.94 (125.5) |
| 1009928CH | 15.00 (381.0) | 11.00 (279.4) | 4.38 (111.3) |
| 1009874ACH | 15.00 (381.0) | 13.00 (330.2) | 4.94 (125.5) |
| 1009046CH | 20.75 (527.1) | 9.00 (228.6) | 4.94 (125.5) |
| 1008941CH | 17.13 (435.1) | 13.00 (330.2) | 4.94 (125.5) |
| 1008940CH | 17.13 (435.1) | 13.00 (330.2) | 4.94 (125.5) |
| 1008827CH | 13.00 (330.2) | 13.00 (330.2) | 4.94 (125.5) |
| 1008819CH | 13.00 (330.2) | 13.00 (330.2) | 4.94 (125.5) |
| 1008717CH | 15.00 (381.0) | 13.00 (330.2) | 4.94 (125.5) |
| 1008617CH | 15.00 (381.0) | 13.00 (330.2) | 4.94 (125.5) |
| 1007817CH | 15.00 (381.0) | 11.00 (279.4) | 4.38 (111.3) |
| 1007699CH | 14.00 (355.6) | 8.00 (203.2) | 4.38 (111.3) |
| 1007665CH | 14.00 (355.6) | 8.00 (203.2) | 4.38 (111.3) |
| 1007588CH | 13.00 (330.2) | 13.00 (330.2) | 4.94 (125.5) |
| 1007448ACH | 19.00 (482.6) | 11.00 (279.4) | 4.38 (111.3) |
| 1004884ARHCH ③ | 13.00 (330.2) | 13.00 (330.2) | 4.93 (125.2) |
| 1004884ACH | 13.00 (330.2) | 13.00 (330.2) | 4.93 (125.2) |
| 1004710ECH | 14.00 (355.6) | 11.00 (279.4) | 4.38 (111.3) |
| 1004709DCH | N/A | N/A | N/A |
| 1004455BCH | 15.00 (381.0) | 8.00 (203.2) | 4.38 (111.3) |
| 1004161ACH | 14.00 (355.6) | 8.00 (203.2) | 4.38 (111.3) |
| 1004159ACH | 15.00 (381.0) | 11.00 (279.4) | 4.38 (111.3) |
| 1003879ACH | 15.00 (381.0) | 8.00 (203.2) | 4.38 (111.3) |
| 1003878ACH | 15.00 (381.0) | 11.00 (279.4) | 4.38 (111.3) |
| UTRS502BCH | 14.00 (355.6) | 8.00 (203.2) | 4.38 (111.3) |

***Notes***

① Aluminum enclosure.
② Barrel lock.
③ Right hand incoming.

Approximate Dimensions in Inches (mm)

## Residential Ringless Type Cover, continued

| Catalog Number | Height | Width | Depth |
|---|---|---|---|
| **UTRS502BCH** | 14.00 (355.6) | 8.00 (203.2) | 4.36 (110.7) |
| **UTRS502CCH** | 14.00 (355.6) | 8.00 (203.2) | 4.36 (110.7) |
| **1006385BCH** | N/A | N/A | N/A |
| **UTRS111BCH** | 14.00 (355.6) | 11.00 (279.4) | 4.36 (110.7) |
| **UBTRS101BCH** | 10.88 (276.4) | 8.00 (203.2) | 3.50 (88.9) |
| **UTRS101LCH** | 10.88 (276.4) | 8.00 (203.2) | 3.50 (88.9) |
| **UTRS101CE** | 11.05 (280.7) | 8.22 (208.8) | 3.61 (91.7) |
| **UTRS101BE** | 11.05 (280.7) | 8.22 (208.8) | 3.61 (91.7) |
| **URS101CCPLCH** | 10.88 (276.4) | 8.00 (203.2) | 3.50 (88.9) |
| **URS101BDQCH** | 10.88 (276.4) | 8.00 (203.2) | 3.50 (88.9) |
| **URS101BCPLCH** | 10.88 (276.4) | 8.00 (203.2) | 3.50 (88.9) |
| **URS101BCH** | 10.88 (276.4) | 8.00 (203.2) | 3.50 (88.9) |
| **UHTTRS101BCH** | 10.88 (276.4) | 8.00 (203.2) | 3.50 (88.9) |
| **UHTRS111BCH** | 14.00 (355.6) | 11.00 (279.4) | 4.38 (111.3) |
| **UHTRS101LCH** | 10.88 (276.4) | 8.00 (203.2) | 3.50 (88.9) |
| **UHTRS101CE** | 11.05 (280.7) | 8.22 (208.8) | 3.61 (91.7) |
| **UHTRS101BE** | 11.05 (280.7) | 8.22 (208.8) | 3.61 (91.7) |
| **UGRS10101CKCCH** | 12.00 (304.8) | 8.00 (203.2) | 3.50 (88.9) |
| **UGHTRS111CCH** | 14.00 (355.6) | 11.00 (279.4) | 4.36 (110.7) |
| **UGHTRS101BCH** | 10.88 (276.4) | 8.00 (203.2) | 3.50 (88.9) |
| **UBHRS101BCH** | 10.88 (276.4) | 8.00 (203.2) | 3.50 (88.9) |
| **UATZRS101CFLCH** | 10.88 (276.4) | 8.00 (203.2) | 3.50 (88.9) |
| **UATRS101CCH** | 10.87 (276.1) | 8.00 (203.2) | 3.50 (88.9) |
| **1008947CH** | 10.89 (276.6) | 8.00 (203.2) | 3.50 (88.9) |
| **1005826ACH** | N/A | N/A | N/A |
| **1004931BCH** | 10.88 (276.4) | 8.00 (203.2) | 3.50 (88.9) |
| **1004162ACH** | 10.89 (276.6) | 8.00 (203.2) | 3.50 (88.9) |
| **1003880ACH** | 10.89 (276.6) | 8.00 (203.2) | 3.50 (88.9) |
| **UTZRS101BFLCH** | N/A | N/A | N/A |
| **UTZRS101CFLCH** | N/A | N/A | N/A |
| **1009079CH** | 23.75 (603.3) | 8.00 (203.2) | 3.48 (88.4) |

## Residential Ring Type Cover

| Catalog Number | Height | Width | Depth |
|---|---|---|---|
| **URTRS223ACH** | 13.00 (330.2) | 13.00 (330.2) | 4.93 (125.2) |
| **URRS213CCH** | 15.00 (381.0) | 11.00 (279.4) | 4.38 (111.3) |
| **URTRS213NEUSCH** | 15.00 (381.0) | 11.00 (279.4) | 4.38 (111.3) |
| **URTRS213CEUSCH** | 15.00 (381.0) | 11.00 (279.4) | 4.38 (111.3) |
| **1009424CH** | 15.00 (381.0) | 11.00 (279.4) | 4.38 (111.3) |
| **1009449CH** | 18.31 (465.1) | 14.19 (360.4) | 5.13 (130.3) |
| **URSTRS203BCH** | N/A | N/A | N/A |
| **URS212BCRCH** | 14.00 (355.6) | 8.00 (203.2) | 4.38 (111.3) |
| **URTRS202BCH** | 14.00 (355.6) | 11.00 (279.4) | 4.38 (111.3) |
| **URTRS213BE** | 14.00 (355.6) | 8.00 (203.2) | 4.50 (114.3) |
| **URTRS202BCH** | 15.13 (384.3) | 11.25 (285.8) | 4.50 (114.3) |
| **URTRS213CE** | 15.13 (384.3) | 11.25 (285.8) | 4.50 (114.3) |
| **URTRS213BEUSCH** | 15.13 (384.3) | 11.25 (285.8) | 4.50 (114.3) |
| **URTRS202NEUSCH** | 14.00 (355.6) | 8.00 (203.2) | 4.38 (111.3) |
| **UNRRS202BEUSCH** | 14.00 (355.6) | 8.00 (203.2) | 4.38 (111.3) |
| **UNRRS213CEUSE** | 15.13 (384.3) | 11.25 (285.8) | 4.50 (114.3) |
| **UNRRS213BEUSE** | 15.13 (384.3) | 11.25 (285.8) | 4.50 (114.3) |
| **UNRRS213AEUSE** | 15.13 (384.3) | 11.25 (285.8) | 4.50 (114.3) |
| **1009097CH** | 19.00 (482.6) | 13.00 (330.2) | 5.25 (133.4) |
| **URS101BCRCH** | 10.88 (276.4) | 8.00 (203.2) | 3.50 (88.9) |
| **URRS101LCH** | 10.88 (276.4) | 8.00 (203.2) | 3.50 (88.9) |
| **URTRS101BE** | 11.00 (279.4) | 8.25 (209.6) | 3.63 (92.2) |
| **URTRS101CE** | 11.00 (279.4) | 8.25 (209.6) | 3.63 (92.2) |
| **UNRRS101BEUSE** | 10.88 (276.4) | 8.00 (203.2) | 3.50 (88.9) |
| **UNRRS101CEUSE** | 10.88 (276.4) | 8.00 (203.2) | 3.50 (88.9) |
| **UNRRS111BEUSE** | 14.00 (355.6) | 11.00 (279.4) | 4.38 (111.3) |
| **URSTRS101BCH** | 10.88 (276.4) | 8.00 (203.2) | 3.50 (88.9) |

**Commercial Lever Bypass Sockets**

## Contents


| *Description* | *Page* |
|---|---|
| Catalog Number Selection | **V1-T4-11** |
| Product Selection | **V1-T4-12** |
| Dimensions | **V1-T4-16** |


## Product Description

- Heavy-duty, lever bypass, jaw clamping ringless meter socket design
- 200 A and 320 A styles available
- Single-phase or three-phase
- 4, 5 or 7 terminal available
- 600 Vac maximum rating
- Multiple service design offerings

## Standards and Certifications

- UL 414 listed and recognized

Listed

## Catalog Number Selection

### Single Meter Sockets H Group

**UT H 4 2 0 3 B CH**

**Note:** The "U" prefix is always used first followed by other prefixes required in alphabetical order.

| Standard Prefixes | |
|---|---|
| **A** | = Aluminum enclosure |
| **B** | = Barrel lock provision, for an exposed INNER-TITE or Brooks barrel lock; unit includes an internal lock receiver bracket |
| **F** | = Barrel Lock with guard provision, for a lock guard INNER-TITE or Brooks barrel lock; unit includes an internal lock receiver bracket |
| **G** | = Grounded fifth terminal (9 o'clock position) |
| **H** | = Horn bypass |
| **I** | = Inhibitor installed in wire connectors |
| **M** | = Temporary meter cover (waxed cardboard) |
| **N** | = No sealing ring (applies only to ring style sockets) |
| **R** | = Ring style socket |
| **S** | = Aluminum screw type sealing ring (applies only to ring style sockets) |
| **T** | = Grounding connector (#14–#2 Cu) for triplex ground |
| **TT** | = Two grounding connectors (#14–#2 Cu) for quadplex ground |
| **U** | = UL label |
| **Z** | = 5/16-inch hex head connector screw in place of slotted (100 A only) |

| Product Group | |
|---|---|
| **RS** | = Residential service, single position |
| **2R-6R** | = Residential service, multiple position |
| **2H-6H** | = Commercial or residential service, multiple position |
| **H** | = Commercial or residential service, single position |

| Jaw Quantity |
|---|
| **4** = 4 terminals |
| **5** = 5 terminals |
| **7** = 7 terminals |

| Ampere Rating |
|---|
| **2** = 200 A |
| **3** = 320 A |

| Service Design |
|---|
| **0** = Overhead |
| **1** = Combination overhead/underground |
| **2** = Underground, side wired |
| **3** = Combination overhead/underground, side wired |

| Maximum Conductor (Line & Load) |
|---|
| **0** = 0.38-inch stud connectors |
| **3** = #350 kcmil connectors |
| **5** = #500 kcmil connectors |
| **6** = #600 kcmil connectors |
| **7** = #750 kcmil connectors |
| **8** = Dual #250 kcmil connectors |
| **9** = Dual #350 kcmil connectors |

| Standard Suffixes | |
|---|---|
| **A** | = Solid top |
| **B** | = Small hub opening |
| **C** | = Small hub closing plate mounted |
| **L** | = 1.25-inch (31.8 mm) hub mounted |
| **M** | = 1.50-inch (38.1 mm) hub mounted |
| **N** | = 2.00-inch (50.8 mm) hub mounted |
| **P** | = 2.50-inch (63.5 mm) hub mounted |
| **T** | = Large hub opening hub |
| **U** | = Large hub cover plate hub mounted |
| **V** | = 2.50-inch (63.5 mm) large hub mounted |
| **Q** | = 3.00-inch (76.2 mm) large hub mounted |
| **R** | = 3.50-inch (88.9 mm) large hub mounted |
| **S** | = 4.00-inch (101.6 mm) large hub mounted |
| **Z** | = Large to small hub adapter mounted |

## Product Selection

### Commercial Lever Bypass

| Ampere Rating | Jaws | Service | Bypass | Connections Line | Load | Opening, Hub or Closure Plate | Catalog Number |
|---|---|---|---|---|---|---|---|
| 320 | 7 | OH/UG | Lever | #4-600 kcmil | #4–600 kcmil | 5x5 hub opening | **UTTH7336TCH** |
| 320 | 7 | OH | Lever | #600 kcmil | Dual #6–350 | 5x5 hub opening | **UTH73069THLCH** |
| 320 | 7 | OH/UG | Lever | #14–1/0 cu/al | #6–350 kcmil | 5x5 hub cover plate | **UTH73369UHLCH** |
| 320 | 7 | OH/UG | Lever | #14–1/0 cu/al | #6–350 kcmil | 5x5 hub opening | **UTH73369THLCH** |
| 320 | 7 | OH/UG | Lever | 3/8-inch studs | 3/8-inch studs | 5x5 hub cover plate | **UFTH7330UCH** |
| 320 | 7 | OH/UG | Lever | #600 kcmil | #600 kcmil | 5x5 hub opening | **UTH7336TCH** |
| 320 | 7 | OH/UG | Lever | 3/8-inch studs | 3/8-inch studs | 5x5 hub cover plate | **UTH7330UCH** |
| 320 | 7 | OH/UG | Lever | 3/8-inch studs | 3/8-inch studs | 5x5 hub cover plate | **UTH7330UFLCH** |
| 320 | 7 | OH/UG | Lever | 3/8-inch studs | 3/8-inch studs | 5x5 hub cover plate | **UATH7330UFLCH** ① |
| 320 | 7 | OH/UG | Lever | 3/8-inch studs | 3/8-inch studs | 5x5 hub opening | **UH7330TCPLCH** |
| 320 | 7 | OH/UG | Lever | 3/8-inch studs | 3/8-inch studs | 5x5 hub opening | **UTH7330TCH** |
| 320 | 7 | OH/UG | Lever | 3/8-inch studs | 3/8-inch studs | 5x5 hub-inch opening | **UTTH7330TCH** |
| 320 | 7 | OH/UG | Lever | 3/8-inch studs | 3/8-inch studs | 5x5 hub cover plate | **UH7300UCPLCH** |
| 320 | 7 | OH/UG | Lever | 3/8-inch studs | 3/8-inch studs | 5x5 hub cover plate | **UTH7300UCH** |
| 320 | 7 | OH/UG | Lever | 3/8-inch studs | 3/8-inch studs | 5x5 hub opening | **UTH7300TCH** |
| 320 | 7 | OH/UG | Lever | #6–350 kcmil | #6–350 kcmil | Hub closure plate | **1006353CCH** ② |
| 320 | 5 | OH/UG | Lever | 3/8-inch studs | 3/8-inch studs | 5x5 hub cover plate | **UTH5330UFLCH** |
| 320 | 5 | OH/UG | Lever | 3/8-inch studs | 3/8-inch studs | 5x5 hub cover plate | **UTH5330UCH** |
| 320 | 5 | OH | Lever | 3/8-inch studs | 3/8-inch studs | 5x5 hub opening | **UTH5300TCH** |
| 320 | 5 | OH/UG | Lever | 3/8-inch studs | 3/8-inch studs | 5x5 hub cover plate | **UATH5330UFLCH** |
| 320 | 4 | OH/UG | lever | #4–600 kcmil | #4–600 kcmil | Hub closure plate | **1010468CH** ② |
| 320 | 4 | UG | Lever | 3/8-inch studs | 3/8-inch studs | Solid top | **UTH4320ACH** |
| 320 | 4 | UG | Lever | 3/8-inch studs | Dual #6–350 | Solid top | **UTH43209ACH** |
| 320 | 4 | OH/UG | Lever | #6–350 kcmil | #6–350 kcmil | 5x5 hub cover plate | **UTH4339UCH** |
| 320 | 4 | OH/UG | Lever | #6–250 kcmil | #6–250 kcmil | 5x5 hub cover plate | **UTH4338UCH** |
| 320 | 4 | OH/UG | Lever | #4–600 kcmil | #4–600 kcmil | 5x5 hub cover plate | **UTH4336UCH** |
| 320 | 4 | OH/UG | Lever | #4–600 kcmil | #4–600 kcmil | 5x5 hub opening | **UTH4336TCH** |
| 320 | 4 | OH/UG | Lever | #4–600 kcmil | #6–350 kcmil | 5x5 hub cover plate | **UTH43369UCH** |
| 320 | 4 | OH/UG | Lever | #4–600 kcmil | #6–350 kcmil | 5x5 hub opening | **UTH43369TCH** |
| 320 | 4 | OH/UG | Lever | 3/8-inch studs | 3/8-inch studs | 3-5/16 hub cover plate | **UTTH4330UCH** |
| 320 | 4 | OH/UG | Lever | 3/8-inch studs | 3/8-inch studs | 3-5/16 hub cover plate | **UTH4330UCH** |
| 320 | 4 | OH/UG | Lever | 3/8-inch studs | 3/8-inch studs | 5x5 hub opening | **UBTH4330TCH** |
| 320 | 4 | OH/UG | Lever | 3/8-inch studs | 3/8-inch studs | 5x5 hub opening | **UTH4330TCH** |
| 320 | 4 | OH/UG | Lever | 3/8-inch studs | 3/8-inch studs | 5x5 cover plate | **UTH4300UCH** |
| 320 | 4 | OH/UG | Lever | 3/8-inch studs | 3/8-inch studs | 5x5 hub opening | **UTH4300TCH** |
| 320 | 5 | OH/UG | Lever | 3/8-inch studs | 3/8-inch studs | 5x5 hub cover plate | **UH5300UKCCH** |
| 320 | 4 | OH/UG | Lever | #6–250 kcmil | #4–600 kcmil | 5x5 hub cover plate | **UH43168UCPLCH** |
| 320 | 4 | OH/UG | Lever | #4–600 kcmil | #6–250 kcmil | 5x5 hub cover plate | **UH43068TCPLCH** |
| 320 | 5 | OH/UG | Lever | 3/8-inch studs | 3/8-inch studs | 5x5 hub cover plate | **UGTH4330UCH** |
| 320 | 5 | OH/UG | Lever | 3/8-inch studs | 3/8-inch studs | 5x5 hub opening | **UGTH4330TCH** |
| 320 | 7 | OH/UG | Lever | 3/8-inch studs | 3/8-inch studs | 5x5 hub opening | **UFTH7330TCH** |
| 320 | 4 | OH/UG | Lever | 3/8-inch studs | 3/8-inch studs | 5x5 hub opening | **UFTH4330TCH** |

***Notes***

① Aluminum enclosure.

② Austin Energy approved.

For dimensions, see **Pages V1-T4-16** and **V1-T4-17**.

## Commercial Lever Bypass, continued

| Ampere Rating | Jaws | Service | Bypass | Connections Line | Load | Opening, Hub or Closure Plate | Catalog Number |
|---|---|---|---|---|---|---|---|
| 320 | 7 | OH/UG | Lever | #4–600 kcmil | #4–600 kcmil | 5x5 hub opening | **UATH7336TCH** |
| 320 | 5 | OH/UG | Lever | 3/8-inch studs | 3/8-inch studs | 5x5 hub cover plate | **UATH5330UFLCH** |
| 320 | 4 | OH/UG | Lever | #4–600 kcmil | #4–600 kcmil | 5x5 hub opening | **UATH4336TCH** |
| 320 | 4 | OH/UG | Lever | 3/8-inch studs | 3/8-inch studs | 5x5 hub opening | **UATH4330TCH** |
| 320 | 4 | OH/UG | Lever | 3/8-inch studs | 3/8-inch studs | 5x5 hub cover plate | **1009788CH** |
| 320 | 4 | OH/UG | Lever | 3/8-inch studs | 3/8-inch studs | 5x5 hub cover plate | **1009788ACH** ① |
| 320 | 4 | OH/UG | Lever | Dual #6–350 | Dual #6–350 | (2) 5x5 hub cover plates | **1009760ACH** |
| 320 | 4 | OH/UG | Lever | Dual #6–350 | Dual #6–350 | 5x5 hub cover plate | **1009722CH** |
| 320 | 4 | OH/UG | Lever | 3/8-inch studs | 3/8-inch studs | 5x5 hub cover plate | **782116975945** |
| 320 | 4 | OH/UG | Lever | 3/8-inch studs | 3/8-inch studs | 5x5 hub cover plate | **1009260CH** |
| 320 | 7 | OH/UG | Lever | #4–600 kcmil/Dual 1/0–250 kcmil cu/al | #4–600 kcmil/Dual 1/0–250 kcmil cu/al | 5x5 hub opening | **1009181CH** |
| 320 | 4 | UG | Lever | #6–350 kcmil | #6–350 kcmil | Solid top | **1009018CH** |
| 320 | 4 | OH/UG | Lever | 3/8-inch studs | 3/8-inch studs | 5x5 hub opening | **1008950CH** |
| 320 | 4 | OH/UG | Lever | 3/8-inch studs | 3/8-inch studs | 5x5 hub opening | **1008948CH** |
| 320 | 4 | UG | Lever | 3/8-inch studs | 3/8-inch studs | Solid top | **1008848CH** |
| 320 | 4 | OH/UG | Lever | 3/8-inch studs | 3/8-inch studs | 5x5 hub opening | **1008837CH** |
| 320 | 4 | OH/UG | Lever | 3/8-inch studs | 3/8-inch studs | 5x5 hub opening | **1008836CH** |
| 320 | 7 | OH/UG | Lever | 3/8-inch studs | 3/8-inch studs | 5x5 hub opening | **1008798CH** |
| 320 | 4 | OH/UG | Lever | 3/8-inch studs | 3/8-inch studs | 5x5 hub opening | **1008793CH** |
| 320 | 5 | OH/UG | Lever | 3/8-inch studs | 3/8-inch studs | 5x5 hub opening | **1008792CH** |
| 320 | 7 | OH/UG | Lever | #4–600 kcmil/Dual 1/0–250 kcmil cu/al | #4–600 kcmil/Dual 1/0–250 kcmil cu/al | 5x5 hub opening | **1008543CH** |
| 320 | 4 | OH/UG | Lever | #4–600 kcmil cu/al | #4–600 kcmil cu/al | 5x5 hub opening | **1008541CH** |
| 320 | 4 | UG | Lever | N/A | N/A | Solid top | **1008540CH** |
| 320 | 4 | OH/UG | Lever | #4–600 kcmil cu/al | #4–600 kcmil cu/al | Solid top | **1008435CH** |
| 320 | 4 | OH/UG | Lever | 3/8-inch studs | 3/8-inch studs | 5x5 hub opening | **1008191CH** |
| 320 | 4 | OH/UG | Lever | #6–350 kcmil | #6–350 kcmil | 5x5 hub opening | **1008068CH** |
| 320 | 4 | OH/UG | Lever | N/A | N/A | N/A | **1007818CH** |
| 320 | 4 | OH/UG | Lever | 3/8-inch studs | 3/8-inch studs | 5x5 hub opening | **1007801CH** |
| 320 | 4 | OH/UG | Lever | 3/8-inch studs | 3/8-inch studs | 5x5 hub opening | **1007672CH** |
| 320 | 4 | OH/UG | Lever | #6–350 kcmil | #6–350 kcmil | 5x5 hub opening | **1006344ACH** |
| 320 | 4 | OH/UG | Lever | TBD | TBD | 5x5 hub opening | **1004984ACH** |
| 320 | 4 | OH/UG | N/A | #4–600 kcmil | #4–600 kcmil | 3-inch bolt-on hub | **1004771BCH** |
| 200 | 7 | OH/UG | Lever | 3/8-inch studs | 3/8-inch studs | N/A | **UBTH7230ACH** |
| 200 | 7 | OH/UG | Lever | #6–350 kcmil | #6–350 kcmil | 5x5 hub cover plate | **UTH7233UCH** |

***Notes***

① Bolted in shield.

For dimensions, see **Pages V1-T4-16** and **V1-T4-17**.

## Commercial Lever Bypass, continued

| Ampere Rating | Jaws | Service | Bypass | Connections Line | Load | Opening, Hub or Closure Plate | Catalog Number |
|---|---|---|---|---|---|---|---|
| 200 | 7 | OH/UG | Lever | #6–350 kcmil | #6–350 kcmil | 5x5 hub cover plate | **UTE7213UFLCH** |
| 200 | 7 | OH/UG | Lever | #6–350 kcmil | #6–350 kcmil | 3-5/16 hub cover plate | **UETH72137UCH** |
| 200 | 7 | OH/UG | Lever | #6–350 kcmil | #6–350 kcmil | 3-5/16 hub cover plate | **UTE7213UCH** |
| 200 | 7 | OH/UG | Lever | #6–350 kcmil | #6–350 kcmil | 5x5 hub opening | **UTE7213THLCH** |
| 200 | 7 | OH/UG | Lever | #6–350 kcmil | #6–350 kcmil | 5x5 hub opening | **UBHRS212BCH** |
| 200 | 7 | OH/UG | Lever | #6–350 kcmil | #6–350 kcmil | 5x5 hub opening | **UBEH7213TCH** |
| 200 | 7 | OH/UG | Lever | #6–350 kcmil | #6–350 kcmil | 5x5 hub opening | **UFTE7213TCH** ① |
| 200 | 7 | OH/UG | Lever | #6–350 kcmil | #6–350 kcmil | Large to small hub adapter | **UTE7213ZCH** |
| 200 | 7 | OH/UG | Lever | #6–350 kcmil | #6–350 kcmil | 5x5 hub opening | **UTE7213TCH** |
| 200 | 7 | OH/UG | Lever | #6–350 kcmil | #6–350 kcmil | 3-5/16 hub cover plate | **UTE7213CFLCH** |
| 200 | 7 | OH/UG | Lever | #6–350 kcmil | #6–350 kcmil | 3-5/16 hub cover plate | **UTE7213CCH** |
| 200 | 7 | OH/UG | Lever | #6–350 kcmil | #6–350 kcmil | 3-5/16 hub opening | **UBTE7213BCH** |
| 200 | 7 | OH/UG | Lever | #6–350 kcmil | #6–350 kcmil | 3-5/16 hub opening | **UTE7213BCH** |
| 200 | 7 | OH/UG | Lever | 3/8-inch studs | 3/8-inch studs | 5x5 hub cover plate | **UTE7210UCH** |
| 200 | 7 | OH | Lever | #6–350 kcmil | #6–350 kcmil | 5x5 hub opening | **UTE7203TCH** |
| 200 | 7 | OH | Lever | #6–350 kcmil | #6–350 kcmil | 3-5/16 hub opening | **UTE7203BCH** |
| 200 | 5 | OH/UG | Lever | #6–350 kcmil | #6–350 kcmil | 5x5 hub cover plate | **UETH5213UCH** |
| 200 | 5 | OH/UG | Lever | #6–350 kcmil | #6–350 kcmil | 5x5 hub opening | **UTE5213TCH** |
| 200 | 5 | OH/UG | Lever | #6–350 kcmil | #6–350 kcmil | 5x5 hub opening | **UTTE5213TCH** |
| 200 | 5 | OH/UG | Lever | #6–350 kcmil | #6–350 kcmil | 3-5/16 hub cover plate | **UTE5213CCH** |
| 200 | 5 | OH/UG | Lever | #6–350 kcmil | #6–350 kcmil | 3-5/16 hub opening | **UTE5213BNDCH** |
| 200 | 5 | OH/UG | Lever | #6–350 kcmil | #6–350 kcmil | Large to small hub adapter | **UTE5213ZCH** |
| 200 | 5 | OH/UG | Lever | #6–350 kcmil | #6–350 kcmil | 5x5 hub cover plate | **UTE5213UFLCH** |
| 200 | 5 | OH/UG | Lever | #6–350 kcmil | #6–350 kcmil | 3-5/16 hub cover plate | **UTE5213CFLCH** |
| 200 | 5 | OH/UG | Lever | #6–350 kcmil | #6–350 kcmil | 3-5/16 hub opening | **UTE5213BCH** |
| 200 | 5 | OH/UG | Lever | 3/8-inch studs | 3/8-inch studs | 3-5/16 hub cover plate | **UTE5210CCH** |
| 200 | 5 | OH | Lever | #6–350 kcmil | #6–350 kcmil | 3-5/16 hub opening | **UTE5203BCH** |
| 200 | 4 | OH/UG | Lever | #6–350 kcmil | #6–350 kcmil | 5x5 hub opening with adapter plate | **UTE4213ZCH** |
| 200 | 5 | OH/UG | Lever | #6–350 kcmil | #6–350 kcmil | 5x5 hub cover plate | **UGTE4213CCH** |
| 200 | 4 | OH/UG | Lever | #6–350 kcmil | #6–350 kcmil | 5x5 hub opening | **UTE4213TCH** |
| 200 | 4 | OH/UG | Lever | #6–350 kcmil | #6–350 kcmil | 5x5 hub cover plate | **UTTE4213UCH** ② |
| 200 | 4 | OH/UG | Lever | #6–350 kcmil | #6–350 kcmil | 5x5 hub cover plate | **UTE4213CCH** |
| 200 | 4 | OH/UG | Lever | #6–350 kcmil | #6–350 kcmil | 3-5/16 hub opening | **UTE4213BCH** |
| 200 | 4 | OH | Lever | #6–350 kcmil | #6–350 kcmil | 3-5/16 hub opening | **UTE4203BCH** |
| 200 | 7 | OH/UG | Lever | #6–350 kcmil | #6–350 kcmil | 5x5 hub cover plate | **UIH7213UCVCH** |
| 200 | 7 | OH/UG | Lever | #6–350 kcmil | #6–350 kcmil | 3-5/16 hub cover plate | **UE7213CCCCH** |
| 200 | 7 | OH/UG | Lever | #6–350 kcmil | #6–350 kcmil | 3-5/16 hub cover plate | **UE7213CCPLCH** |
| 200 | 7 | OH/UG | Lever | #6–350 kcmil | #6–350 kcmil | 3-5/16 hub opening | **UE7213BCPLCH** |

***Notes***

① Barrel lock.

② TT = quadplex ground.

For dimensions, see **Pages V1-T4-16** and **V1-T4-17**.

## Commercial Lever Bypass, continued

| Ampere Rating | Jaws | Service | Bypass | Connections Line | Load | Opening, Hub or Closure Plate | Catalog Number |
|---|---|---|---|---|---|---|---|
| 200 | 5 | OH/UG | Lever | #6–350 kcmil | #6–350 kcmil | 3-5/16 hub opening | **UGTE4213BCH** |
| 200 | 4 | OH/UG | Lever | #6–350 kcmil | #6–350 kcmil | 3-5/16 hub cover plate | **UGE4213CCCCH** |
| 200 | 7 | OH/UG | Lever | #6–350 kcmil | #6–350 kcmil | 3-5/16 hub opening | **UFTE7213BCH** |
| 200 | 7 | OH/UG | Lever | #6–350 kcmil | #6–350 kcmil | 5x5 hub opening | **UATE7213TCH** |
| 200 | 5 | OH/UG | Lever | #6–350 kcmil | #6–350 kcmil | 3-5/16 hub cover plate | **UATE5213CCH** |
| 200 | 4 | OH/UG | Lever | #6–350 kcmil | #6–350 kcmil | 5x5 hub cover plate | **UATE4213UFLCH** |
| 200 | 5 | OH | Lever | #6–350 kcmil | #6–350 kcmil | 3-5/16 hub opening | **UBGTE4203BCH** |
| 200 | 7 | UG | Lever | 4/0 compression line | #6–350 kcmil cu/al load | Solid top | **1009845ECH** |
| 200 | 5 | OH/UG | Lever | #6–350 kcmil | #6–350 kcmil | 3-5/16 hub cover plate | **1008801ECH** |
| 200 | 5 | OH/UG | Lever | 3/8-inch studs | 3/8-inch studs | 3-5/16 hub cover plate | **1008832ECH** |
| 200 | 4 | UG | Lever | #6–350 kcmil | #6–350 kcmil | Solid top | **1007944ECH** |
| 200 | 7 | OH/UG | Lever | #6–350 kcmil cu/al | #6–350 kcmil cu/al | 5x5 hub opening | **1007670ECH** |
| 200 | 7 | OH/UG | Lever | #6–350 kcmil | #6–350 kcmil | 5x5 hub opening | **UTTE7213TCH** |

***Note***

For dimensions, see **Pages V1-T4-16** and **V1-T4-17**.

## Dimensions

Approximate Dimensions in Inches (mm)

### Commercial Lever Bypass

| Catalog Number | Height | Width | Depth |
|---|---|---|---|
| **UTTH7336TCH** | 39.89 (1013.2) | 20.00 (508.0) | 6.50 (165.1) |
| **UTH73069THLCH** | N/A | N/A | N/A |
| **UTH73369UHLCH** | 39.89 (1013.2) | 20.00 (508.0) | 6.50 (165.1) |
| **UTH73369THLCH** | 39.89 (1013.2) | 20.00 (508.0) | 6.50 (165.1) |
| **UFTH7330UCH** | 39.89 (1013.2) | 20.00 (508.0) | 6.50 (165.1) |
| **UTH7336TCH** | 39.89 (1013.2) | 20.00 (508.0) | 6.50 (165.1) |
| **UTH7330UCH** | 39.89 (1013.2) | 20.00 (508.0) | 6.50 (165.1) |
| **UTH7330UFLCH** | 39.89 (1013.2) | 20.00 (508.0) | 6.50 (165.1) |
| **UATH7330UFLCH** ① | 39.89 (1013.2) | 20.00 (508.0) | 6.50 (165.1) |
| **UH7330TCPLCH** | 39.89 (1013.2) | 20.00 (508.0) | 6.50 (165.1) |
| **UTH7330TCH** | 39.89 (1013.2) | 20.00 (508.0) | 6.50 (165.1) |
| **UTTH7330TCH** | 39.89 (1013.2) | 20.00 (508.0) | 6.50 (165.1) |
| **UH7300UCPLCH** | 39.89 (1013.2) | 20.00 (508.0) | 6.50 (165.1) |
| **UTH7300UCH** | 39.89 (1013.2) | 20.00 (508.0) | 6.50 (165.1) |
| **UTH7300TCH** | 34.50 (876.3) | 15.00 (381.0) | 5.63 (143.0) |
| **UTH5330UFLCH** | 39.88 (1013.0) | 20.00 (508.0) | 6.50 (165.1) |
| **UTH5330UCH** | 39.88 (1013.0) | 20.00 (508.0) | 6.50 (165.1) |
| **UTH5300TCH** | 39.88 (1013.0) | 20.00 (508.0) | 6.50 (165.1) |
| **UATH5330UFLCH** | 39.88 (1013.0) | 20.00 (508.0) | 6.50 (165.1) |
| **UTH4320ACH** | 26.00 (660.4) | 15.00 (381.0) | 5.68 (144.3) |
| **UTH43209ACH** | N/A | N/A | N/A |
| **UTH4339UCH** | 36.63 (930.4) | 15.00 (381.0) | 5.69 (144.5) |
| **UTH4338UCH** | 29.00 (736.6) | 15.00 (381.0) | 5.69 (144.5) |
| **UTH4336UCH** | 36.63 (930.4) | 15.00 (381.0) | 5.69 (144.5) |
| **UTH4336TCH** | 36.63 (930.4) | 15.00 (381.0) | 5.69 (144.5) |
| **UTH43369UCH** | 36.63 (930.4) | 15.00 (381.0) | 5.69 (144.5) |
| **UTH43369TCH** | 36.63 (930.4) | 15.00 (381.0) | 5.69 (144.5) |
| **UTTH4330UCH** | 36.63 (930.4) | 15.00 (381.0) | 5.69 (144.5) |
| **UTH4330UCH** | 36.63 (930.4) | 15.00 (381.0) | 5.69 (144.5) |
| **UBTH4330TCH** | 36.63 (930.4) | 15.00 (381.0) | 5.69 (144.5) |
| **UTH4330TCH** | 36.63 (930.4) | 15.00 (381.0) | 5.69 (144.5) |
| **UTH4300UCH** | 34.50 (876.3) | 13.00 (330.2) | 4.94 (125.5) |
| **UTH4300TCH** | 34.50 (876.3) | 13.00 (330.2) | 4.94 (125.5) |
| **UH5300UKCCH** | 34.50 (876.3) | 13.00 (330.2) | 4.94 (125.5) |
| **UH43168UCPLCH** | 34.50 (876.3) | 15.00 (381.0) | 5.69 (144.5) |
| **UH43068TCPLCH** | 34.50 (876.3) | 13.00 (330.2) | 4.94 (125.5) |
| **UGTH4330UCH** | 36.63 (930.4) | 15.00 (381.0) | 5.69 (144.5) |
| **UGTH4330TCH** | 36.63 (930.4) | 15.00 (381.0) | 5.69 (144.5) |
| **UFTH7330TCH** | 39.88 (1013.0) | 20.00 (508.0) | 6.50 (165.1) |
| **UFTH4330TCH** | 36.63 (930.4) | 15.00 (381.0) | 5.69 (144.5) |

### Commercial Lever Bypass, continued

| Catalog Number | Height | Width | Depth |
|---|---|---|---|
| **UATH7336TCH** | 39.88 (1013.0) | 20.00 (508.0) | 6.50 (165.1) |
| **UATH5330UFLCH** | 39.88 (1013.0) | 20.00 (508.0) | 6.50 (165.1) |
| **UATH4336TCH** | 36.63 (930.4) | 15.00 (381.0) | 5.69 (144.5) |
| **UATH4330TCH** | 36.63 (930.4) | 15.00 (381.0) | 5.69 (144.5) |
| **1009788CH** | 34.50 (876.3) | 13.00 (330.2) | 4.94 (125.5) |
| **1009788ACH** ② | 34.50 (876.3) | 13.00 (330.2) | 4.94 (125.5) |
| **1009760ACH** | 36.63 (930.4) | 15.00 (381.0) | 5.68 (144.3) |
| **1009722CH** | 36.63 (930.4) | 15.00 (381.0) | 5.68 (144.3) |
| **782116975945** | 36.63 (930.4) | 15.00 (381.0) | 5.69 (144.5) |
| **1009260CH** | 36.63 (930.4) | 15.00 (381.0) | 5.69 (144.5) |
| **1009181CH** | 34.50 (876.3) | 15.00 (381.0) | 5.69 (144.5) |
| **1009018CH** | 63.00 (1600.2) | 12.97 (329.4) | 4.94 (125.5) |
| **1008950CH** | 39.88 (1013.0) | 20.00 (508.0) | 6.50 (165.1) |
| **1008948CH** | 36.63 (930.4) | 15.00 (381.0) | 5.69 (144.5) |
| **1008848CH** | 58.00 (1473.2) | 12.97 (329.4) | 4.94 (125.5) |
| **1008837CH** | 36.63 (930.4) | 15.00 (381.0) | 6.50 (165.1) |
| **1008836CH** | 36.63 (930.4) | 15.00 (381.0) | 6.50 (165.1) |
| **1008798CH** | 34.50 (876.3) | 15.00 (381.0) | 5.69 (144.5) |
| **1008793CH** | 34.50 (876.3) | 13.00 (330.2) | 4.94 (125.5) |
| **1008792CH** | 34.50 (876.3) | 13.00 (330.2) | 4.94 (125.5) |
| **1008543CH** | 39.89 (1013.2) | 20.00 (508.0) | 6.60 (167.6) |
| **1008541CH** | 36.63 (930.4) | 15.00 (381.0) | 5.69 (144.5) |
| **1008540CH** | N/A | N/A | N/A |
| **1008435CH** | 26.00 (660.4) | 15.00 (381.0) | 5.69 (144.5) |
| **1008191CH** | 36.63 (930.4) | 15.00 (381.0) | 5.69 (144.5) |
| **1008068CH** | 34.50 (876.3) | 16.44 (417.6) | 6.50 (165.1) |
| **1007818CH** | N/A | N/A | N/A |
| **1007801CH** | 28.50 (723.9) | 18.00 (457.2) | 5.69 (144.5) |
| **1007672CH** | 36.63 (930.4) | 15.00 (381.0) | 5.69 (144.5) |
| **1006344ACH** | 28.50 (723.9) | 18.00 (457.2) | 5.69 (144.5) |
| **1004984ACH** | 36.63 (930.4) | 15.00 (381.0) | 5.69 (144.5) |
| **1004771BCH** | 36.62 (930.1) | 15.00 (381.0) | 5.68 (144.3) |
| **UBTH7230ACH** | N/A | N/A | N/A |
| **UTH7233UCH** | 27.00 (685.8) | 16.00 (406.4) | 5.63 (143.0) |

***Notes***

① Aluminum enclosure.
② Bolted in shield.

Approximate Dimensions in Inches (mm)

### Commercial Lever Bypass, continued

| Catalog Number | Height | Width | Depth |
|---|---|---|---|
| UTE7213UFLCH | 19.00 (482.6) | 13.00 (330.2) | 4.94 (125.5) |
| UETH72137UCH | 19.00 (482.6) | 13.00 (330.2) | 4.94 (125.5) |
| UTE7213UCH | 19.00 (482.6) | 13.00 (330.2) | 4.94 (125.5) |
| UTE7213THLCH | 19.00 (482.6) | 13.00 (330.2) | 4.94 (125.5) |
| UBHRS212BCH | 19.00 (482.6) | 13.00 (330.2) | 4.94 (125.5) |
| UBEH7213TCH | 19.00 (482.6) | 13.00 (330.2) | 4.94 (125.5) |
| UFTE7213TCH ① | 19.00 (482.6) | 13.00 (330.2) | 4.94 (125.5) |
| UTE7213ZCH | 19.00 (482.6) | 13.00 (330.2) | 4.94 (125.5) |
| UTE7213TCH | 19.00 (482.6) | 13.00 (330.2) | 4.94 (125.5) |
| UTE7213CFLCH | 19.00 (482.6) | 13.00 (330.2) | 4.94 (125.5) |
| UTE7213CCH | 19.00 (482.6) | 13.00 (330.2) | 4.94 (125.5) |
| UBTE7213BCH | 19.00 (482.6) | 13.00 (330.2) | 4.94 (125.5) |
| UTE7213BCH | 19.00 (482.6) | 13.00 (330.2) | 4.94 (125.5) |
| UTE7210UCH | 24.69 (627.1) | 13.00 (330.2) | 4.94 (125.5) |
| UTE7203TCH | 19.00 (482.6) | 10.50 (266.7) | 4.94 (125.5) |
| UTE7203BCH | 19.00 (482.6) | 10.50 (266.7) | 4.94 (125.5) |
| UETH5213UCH | 19.00 (482.6) | 13.00 (330.2) | 4.94 (125.5) |
| UTE5213TCH | 19.00 (482.6) | 13.00 (330.2) | 4.94 (125.5) |
| UTTE5213TCH | 19.00 (482.6) | 13.00 (330.2) | 4.94 (125.5) |
| UTE5213CCH | 19.00 (482.6) | 13.00 (330.2) | 4.94 (125.5) |
| UTE5213BNDCH | 19.00 (482.6) | 13.00 (330.2) | 4.94 (125.5) |
| UTE5213ZCH | 19.00 (482.6) | 13.00 (330.2) | 4.94 (125.5) |
| UTE5213UFLCH | 19.00 (482.6) | 13.00 (330.2) | 4.94 (125.5) |
| UTE5213CFLCH | 19.00 (482.6) | 13.00 (330.2) | 4.94 (125.5) |
| UTE5213BCH | 19.00 (482.6) | 13.00 (330.2) | 4.94 (125.5) |
| UTE5210CCH | 20.13 (511.3) | 13.00 (330.2) | 4.94 (125.5) |
| UTE5203BCH | 19.00 (482.6) | 10.50 (266.7) | 4.94 (125.5) |
| UTE4213ZCH | 19.00 (482.6) | 13.00 (330.2) | 4.94 (125.5) |
| UGTE4213CCH | 19.00 (482.6) | 13.00 (330.2) | 4.94 (125.5) |
| UTE4213TCH | 19.00 (482.6) | 13.00 (330.2) | 4.94 (125.5) |
| UTTE4213UCH ② | 19.00 (482.6) | 13.00 (330.2) | 4.94 (125.5) |
| UTE4213CCH | 19.00 (482.6) | 13.00 (330.2) | 4.94 (125.5) |
| UTE4213BCH | 19.00 (482.6) | 13.00 (330.2) | 4.94 (125.5) |
| UTE4203BCH | 19.00 (482.6) | 10.50 (266.7) | 4.94 (125.5) |
| UIH7213UCVCH | 19.00 (482.6) | 13.00 (330.2) | 4.94 (125.5) |
| UE7213CCCCH | 19.00 (482.6) | 13.00 (330.2) | 4.94 (125.5) |
| UE7213CCPLCH | 19.00 (482.6) | 13.00 (330.2) | 4.94 (125.5) |
| UE7213BCPLCH | 19.00 (482.6) | 13.00 (330.2) | 4.94 (125.5) |

### Commercial Lever Bypass, continued

| Catalog Number | Height | Width | Depth |
|---|---|---|---|
| UGTE4213BCH | 19.00 (482.6) | 13.00 (330.2) | 4.94 (125.5) |
| UGE4213CCCCH | 19.00 (482.6) | 13.00 (330.2) | 4.94 (125.5) |
| UFTE7213BCH | 19.00 (482.6) | 13.00 (330.2) | 4.94 (125.5) |
| UATE7213TCH | 19.00 (482.6) | 13.00 (330.2) | 4.94 (125.5) |
| UATE5213CCH | 19.00 (482.6) | 13.00 (330.2) | 4.94 (125.5) |
| UATE4213UFLCH | 19.00 (482.6) | 13.00 (330.2) | 4.94 (125.5) |
| UBGTE4203BCH | 19.00 (482.6) | 10.50 (266.7) | 4.94 (125.5) |
| 1009845ECH | 64.00 (1625.6) | 11.00 (279.4) | 6.00 (152.4) |
| 1008801ECH | 19.00 (482.6) | 13.00 (330.2) | 4.94 (125.5) |
| 1008832ECH | 24.69 (627.1) | 13.00 (330.2) | 4.94 (125.5) |
| 1007944ECH | 22.00 (558.8) | 16.00 (406.4) | 5.69 (144.5) |
| 1007670ECH | 19.00 (482.6) | 13.00 (330.2) | 4.94 (125.5) |
| UTTE7213TCH | 19.00 (482.6) | 13.00 (330.2) | 4.94 (125.5) |

***Notes***

① Barrel lock.

② TT = quadplex ground.

**Multiple Position Horizontal Ganged Sockets**

## Contents


| *Description* | *Page* |
|---|---|
| Catalog Number Selection | **V1-T4-19** |
| Product Selection | **V1-T4-20** |
| Dimensions | **V1-T4-23** |


## Product Description

- Available in 100 A and 200 A designs
- Available in 2-position through 6-position designs
- Multiple service design offerings
- Multiple line/load lug configurations
- Residential or lever bypass socket designs
- Multiple hub opening and closure plate sizes available

## Catalog Number Selection

### Single Meter Sockets 2R-6R and 2H-6H Group

**UT 2R 1 1 2 1 B CH**

**Note:** The "U" prefix is always used first followed by other prefixes required in alphabetical order.

**Standard Prefixes**

- **A** = Aluminum enclosure
- **B** = Barrel lock provision, for an exposed INNER-TITE or Brooks barrel lock; unit includes an internal lock receiver bracket
- **F** = Barrel lock with guard provision, for a lock guard INNER-TITE or Brooks barrel lock; unit includes an internal lock receiver bracket
- **G** = Grounded fifth terminal (9 o'clock position)
- **H** = Horn bypass
- **I** = Inhibitor installed in wire connectors
- **M** = Temporary meter cover (waxed cardboard)
- **N** = No sealing ring (applies only to ring style sockets)
- **R** = Ring style socket
- **S** = Aluminum screw type sealing ring (applies only to ring style sockets)
- **T** = Grounding connector (#14–#2 Cu) for triplex ground
- **TT** = Two grounding connectors (#14–#2 Cu) for quadplex ground
- **U** = UL label
- **Z** = 5/16-inch hex head connector screw in place of slotted (100 A only)

**Product Group**

- **RS** = Residential service, single position
- **2R-6R** = Residential service, multiple position
- **2H-6H** = Commercial or residential service, multiple position
- **H** = Commercial or residential service, single position

**Ampere Rating**

- **1** = 100 A
- **2** = 200 A

**Service Design**

- **0** = Overhead
- **1** = Combination overhead/underground
- **2** = Underground, side wired
- **3** = Combination overhead/underground, side wired
- **4** = End feed

**Maximum Line Conductor**

- **0** = 0.38-inch stud connectors
- **1** = #2/0 connectors
- **2** = #250 kcmil connectors
- **3** = #350 kcmil connectors
- **5** = #500 kcmil connectors
- **6** = #600 kcmil connectors
- **7** = #750 kcmil connectors
- **8** = Dual #500 kcmil connectors

**Maximum Load Conductor**

- **0** = 0.38-inch stud connectors
- **1** = #2/0 connectors
- **2** = #250 kcmil connectors
- **3** = #350 kcmil connectors
- **5** = #500 kcmil connectors
- **6** = #600 kcmil connectors
- **7** = #750 kcmil connectors
- **8** = Dual #500 kcmil connectors

**Standard Suffixes**

- **A** = Solid top
- **B** = Small hub opening
- **C** = Small hub closing plate mounted
- **L** = 1.25-inch (31.8 mm) hub mounted
- **M** = 1.50-inch (38.1 mm) hub mounted
- **N** = 2.00-inch (50.8 mm) hub mounted
- **P** = 2.50-inch (63.5 mm) hub mounted
- **T** = Large hub opening hub
- **U** = Large hub cover plate hub mounted
- **V** = 2.50-inch (63.5 mm) large hub mounted
- **Q** = 3.00-inch (76.2 mm) large hub mounted
- **R** = 3.50-inch (88.9 mm) large hub mounted
- **S** = 4.00-inch (101.6 mm) large hub mounted
- **Z** = Large to small hub adapter mounted

## Product Selection

UT2R2332BCH

### Horizontal Design—Multi Position Ringless

| Ampere Rating | Jaws | Position | Service | Bypass | Connections Line | Load | Opening, Hub or Closure Plate | Catalog Number |
|---|---|---|---|---|---|---|---|---|
| 200 | 4 | 2 | OH/UG | Horn | #6–350 kcmil | #8–250 kcmil | 5x5 hub opening | **1004401BCH** |
| 200 | 4 | 3 | OH/UG | Horn | #6–350 kcmil | #8–250 kcmil | 5x5 hub opening | **1004404BCH** |
| 200 | 5 | 2 | OH/UG | Horn | #6–350 kcmil | #8–250 kcmil | 5x5 hub opening | **1004418ACH** |
| 200 | 4 | 2 | OH/UG | — | 3/8-inch stud | #8–250 kcmil | 5x5 hub cover plate | **1006737BCH** |
| 200 | 4 | 2 | OH/UG | Horn | 3/8-inch stud | #8–250 kcmil | 5x5 hub opening | **1007700CH** |
| 200 | 4 | 3 | OH/UG | Horn | 3/8-inch stud | #8–250 kcmil | Hub opening | **1007701CH** |
| 200 | 4 | 2 | OH/UG | Horn | #6–350 kcmil | #8–250 kcmil | 5x5 hub cover plate | **1008842CH** |
| 200 | 4 | 3 | OH/UG | Horn | 1/0–500 kcmil cu/al | #8–250 kcmil | 5x5 hub cover plate | **1008843CH** |
| 200 | 4 | 4 | OH/UG | Horn | 1/0–500 kcmil cu/al | #8–250 kcmil | 5x5 hub cover plate | **1008844CH** |
| 200 | 4 | 2 | OH/UG | Horn | #6–350 kcmil | #8–250 kcmil | 5x5 hub cover plate | **1008958CH** |
| 200 | 4 | 3 | OH/UG | Horn | 1/0–500 kcmil cu/al | #8–250 kcmil | 5x5 hub cover plate | **1008959CH** |
| 200 | 4 | 4 | OH/UG | Horn | 1/0–500 kcmil cu/al | #8–250 kcmil | 5x5 hub cover plate | **1008960CH** |
| 200 | 4 | 5 | OH/UG | Horn | (2) 1/0–500 kcmil cu/al | #8–250 kcmil | (2) 5x5 hub cover plate | **1009579ACH** |
| 200 | 4 | 4 | OH/UG | Horn | 1/0–500 kcmil cu/al | #8–250 kcmil | 5x5 hub opening | **U4R2352TDQCH** |
| 200 | 4 | 5 | OH/UG | Horn | (2) 1/0–500 kcmil cu/al | #8–250 kcmil | (2) 5x5 hub opening | **U5R2392TTDQCH** |
| 200 | 4 | 6 | OH/UG | Horn | (2) 1/0–500 kcmil cu/al | #8–250 kcmil | 5x5 hub opening (2) places | **U6R2392TTDQCH** |
| 200 | 4 | 4 | OH/UG | Horn | 1/0–500 kcmil cu/al | #8–250 kcmil | 5x5 hub opening | **UBH4R2352TCH** |
| 200 | 4 | 2 | OH/UG | Horn | #6–350 kcmil | #8–250 kcmil | 5x5 hub opening | **UBH2R2332TCH** |
| 200 | 4 | 3 | OH/UG | Horn | #6–350 kcmil | #8–250 kcmil | 5x5 hub opening | **UBH3R2332TCH** |
| 200 | 4 | 4 | OH/UG | Horn | 3/8-inch stud | #8–250 kcmil | 5x5 hub cover plate | **UEHT4R2302UCH** |
| 200 | 4 | 3 | OH/UG | Horn | 3/8-inch stud | #8–250 kcmil | 5x5 hub cover plate | **UEHT3R2302UCH** |
| 200 | 4 | 2 | OH/UG | Horn | 3/8-inch stud | #8–250 kcmil | 5x5 hub cover plate | **UEHT2R2302UCH** |
| 200 | 4 | 2 | UG | Horn | #6–350 kcmil | #8–250 kcmil | Solid top | **UHI2R2332ACVCH** |
| 200 | 4 | 2 | OH/UG | Horn | #6–350 kcmil | #8–250 kcmil | Hub opening | **UHI2R2332TCVCH** |
| 200 | 4 | 4 | UG | Horn | 1/0–500 kcmil cu/al | #8–250 kcmil | Solid top | **UHI4R2352ACVCH** |
| 200 | 4 | 2 | OH/UG | Horn | #6–350 kcmil | #8–250 kcmil | 5x5 hub cover plate | **UHTT2R2332UCH** |
| 200 | 4 | 2 | OH/UG | Horn | #6–350 kcmil | #8–250 kcmil | 5x5 hub opening | **UHT2R2332TCH** |
| 200 | 4 | 3 | OH/UG | Horn | #6–350 kcmil | #8–250 kcmil | 5x5 hub opening | **UHT3R2332TCH** |
| 200 | 4 | 3 | OH/UG | Horn | 1/0–500 kcmil cu/al | #8–250 kcmil | 5x5 hub cover plate | **UHT3R2352UCH** |
| 200 | 4 | 4 | OH/UG | Horn | 1/0–500 kcmil cu/al | #8–250 kcmil | 5x5 hub opening | **UHT4R2352TCH** |
| 200 | 4 | 4 | OH/UG | — | 1/0–500 kcmil cu/al | #8–250 kcmil | 5x5 hub cover plate | **UT4R2352UFLCH** |
| 200 | 4 | 4 | OH/UG | Horn | 1/0–500 kcmil cu/al | #8–250 kcmil | 5x5 hub cover plate | **UHT4R2352UCH** |
| 200 | 5 | 2 | OH/UG | Lever | 1/0–500 kcmil cu/al | #6–350 kcmil | 5x5 hub opening | **UT2H52353TCH** |
| 200 | 4 | 2 | OH/UG | Horn | #6–350 kcmil | #8–250 kcmil | 5x5 hub cover plate | **UHT2R2332UCH** |
| 200 | 4 | 2 | OH/UG | — | #6–350 kcmil | #8–250 kcmil | 3-5/16 hub opening | **UT2R2332BCH** |
| 200 | 4 | 2 | OH/UG | — | #6–350 kcmil | #8–250 kcmil | 5x5 hub opening | **UAT2R2332TCH** ① |
| 200 | 4 | 2 | OH/UG | — | #6–350 kcmil | #8–250 kcmil | 5x5 hub opening | **UT2R2332TCH** |
| 200 | 4 | 2 | OH/UG | — | #6–350 kcmil | #8–250 kcmil | 5x5 hub opening | **U2R2332TCPLCH** |
| 200 | 4 | 2 | OH/UG | — | #6–350 kcmil | #8–250 kcmil | 5x5 hub cover plate | **U2R2332UCPLCH** |
| 200 | 4 | 2 | OH/UG | Horn | #6–350 kcmil | #8–250 kcmil | 5x5 hub opening | **U2R2332TDQCH** |
| 200 | 4 | 2 | OH/UG | — | #6–350 kcmil | #8–250 kcmil | 5x5 hub cover plate | **UT2R2332UCH** |
| 200 | 4 | 3 | OH/UG | Horn | #6–350 kcmil | #8–250 kcmil | Large 5X5 hub opening | **U3R2332TDQCH** |

***Notes***

① Aluminum enclosure.

For dimensions, see **Pages V1-T4-23** and **V1-T4-24**.

UT2R1121BCH

## Horizontal Design—Multi Position Ringless, continued

| Ampere Rating | Jaws | Position | Service | Bypass | Connections Line | Load | Opening, Hub or Closure Plate | Catalog Number |
|---|---|---|---|---|---|---|---|---|
| 200 | 4 | 3 | OH/UG | Lever | 1/0–500 kcmil cu/al | #6–350 kcmil | 5x5 hub opening | **UT3H42353TCH** |
| 200 | 5 | 3 | OH/UG | Lever | 1/0–500 kcmil cu/al | #6–350 kcmil | 5x5 hub opening | **UT3H52353TCH** |
| 200 | 7 | 3 | OH/UG | Lever | 1/0–500 kcmil cu/al | #6–350 kcmil | 5x5 hub cover plate | **UT3H72353UHLCH** |
| 200 | 4 | 3 | OH/UG | — | #6–350 kcmil | #8–250 kcmil | 5x5 hub opening | **UT3R2332TCH** |
| 200 | 4 | 3 | OH/UG | — | #6–350 kcmil | #8–250 kcmil | 5x5 hub cover plate | **UT3R2332UCH** |
| 200 | 4 | 3 | OH/UG | — | 1/0–500 kcmil cu/al | #8–250 kcmil | 5x5 hub opening | **UT3R2352TCH** |
| 200 | 4 | 4 | OH/UG | — | 1/0–500 kcmil cu/al | #8–250 kcmil | 5x5 hub opening | **UT4R2352TCH** |
| 200 | 4 | 5 | OH/UG | Horn | (2) 1/0–500 kcmil cu/al | #8–250 kcmil | 5x5 hub opening (in two places) | **UHT5R2392TTCH** |
| 200 | 4 | 5 | OH/UG | — | (2) 1/0–500 kcmil cu/al | #8–250 kcmil | 5x5 hub opening (in two places) | **UT5R2392TTCH** |
| 200 | 7 | 5 | OH/UG | Lever | Dual 1/0–500 kcmil | #6–350 kcmil | (2) 5X5 hub closure plates | **UT5H72393UUHLCH** |
| 200 | 4 | 6 | OH/UG | Horn | (2) 1/0–500 kcmil cu/al | #8–250 kcmil | 5x5 hub opening (in two places) | **UHT6R2392TTCH** |
| 200 | 4 | 6 | OH/UG | — | (2) 1/0–500 kcmil cu/al | #8–250 kcmil | 5x5 hub opening (in two places) | **UT6R2392TTCH** |
| 200 | 4 | 6 | OH/UG | — | (2) 1/0–500 kcmil cu/al | #8–250 kcmil | 5x5 closure plate (in two places) | **UT6R2392UUFLCH** |
| 200 | 7 | 6 | OH/UG | Lever | Dual 1/0–500 kcmil | #6–350 kcmil | 5x5 closure plate (in two places) | **UT6H72393UUHLCH** |
| 200 | 4 | 6 | OH/UG | Horn | (2) 1/0–500 kcmil cu/al | #8–250 kcmil | 5x5 hub opening (in two places) | **UHT6R2392TTCH** |
| 150 | 4 | 2 | OH/UG | Horn | #6–350 kcmil | #8–250 kcmil | 3-5/16 hub opening | **U2R5432BDQCH** |
| 150 | 4 | 5 | OH/UG | — | #6–350 kcmil | #8–250 kcmil | 3-5/16 hub opening (in two places) | **UT5R5632BCH** |
| 100 | 4 | 6 | OH/UG | — | #6–350 kcmil | #8–2/0 cu/al | 3-5/16 hub opening | **UT6R1131BCH** |
| 100 | 4 | 2 | OH/UG | Horn | #6–250 kcmil | #8–2/0 cu/al | 5x5 hub opening | **1004426ACH** |
| 100 | 4 | 2 | OH/UG | Horn | #6–250 kcmil | #8–2/0 cu/al | 3-5/16 hub opening | **1008951CH** |
| 100 | 4 | 3 | OH/UG | Horn | #6–250 kcmil | #8–2/0 cu/al | 3-5/16 hub opening | **1008952CH** |
| 100 | 4 | 2 | OH/UG | Horn | #6–250 kcmil | #8–2/0 cu/al | 3-5/16 hub cover plate | **1009693CH** |
| 100 | 4 | 3 | OH/UG | Horn | #6–250 kcmil | #8–2/0 cu/al | 3-5/16 hub cover plate | **1009694CH** |
| 100 | 4 | 4 | OH/UG | Horn | #6–250 kcmil | #8–2/0 cu/al | 3-5/16 hub cover plate | **1009695CH** |
| 100 | 4 | 5 | OH/UG | Horn | #6–250 kcmil | #8–2/0 cu/al | 3-5/16 hub cover plate | **1009696CH** |
| 100 | 4 | 6 | OH/UG | — | #6–350 kcmil | #8–2/0 cu/al | 3-5/16 hub cover plate | **UATZ6R1131CFLCH** ① |
| 100 | 4 | 2 | OH/UG | Horn | #6–250 kcmil | #8–2/0 cu/al | 3-5/16 hub opening | **UBH2R1121BCH** |
| 100 | 4 | 3 | OH/UG | Horn | #6–250 kcmil | #8–2/0 cu/al | 3-5/16 hub opening | **UBH3R1121BCH** |
| 100 | 4 | 4 | OH/UG | Horn | #6–250 kcmil | #8–2/0 cu/al | 3-5/16 hub opening | **UBH4R1121BCH** |
| 100 | 4 | 2 | OH/UG | Horn | #6–250 kcmil | #8–2/0 cu/al | 3-5/16 hub opening | **UHT2R1121BCH** |
| 100 | 4 | 4 | OH/UG | — | #6–250 kcmil | #8–2/0 cu/al | 3-5/16 hub opening | **UT4R1121BCH** |
| 100 | 4 | 4 | OH/UG | — | #6–250 kcmil | #8–2/0 cu/al | 3-5/16 closure plate | **UT4R1121CCH** |
| 100 | 4 | 4 | OH/UG | Horn | #6–250 kcmil | #8–2/0 cu/al | 3-5/16 hub opening | **UHT4R1121BCH** |
| 100 | 4 | 5 | OH/UG | Horn | #6–250 kcmil | #8–2/0 cu/al | 3-5/16 hub opening | **UHT5R1121BCH** |
| 100 | 4 | 5 | OH/UG | — | #6–250 kcmil | #8–2/0 cu/al | 3-5/16 hub opening | **UT5R1121BCH** |
| 100 | 4 | 5 | OH/UG | — | #6–250 kcmil | #8–2/0 cu/al | 3-5/16 closure plate | **UT5R1121CCH** |
| 100 | 4 | 2 | OH/UG | — | #6–250 kcmil | #8–2/0 cu/al | 3-5/16 hub opening | **UT2R1121BCH** |
| 100 | 4 | 2 | OH/UG | — | #6–250 kcmil | #8–2/0 cu/al | 3-5/16 closure plate | **UT2R1121CCH** |
| 100 | 4 | 2 | OH/UG | Horn | #6–250 kcmil | #8–2/0 cu/al | 3-5/16 closure plate | **UHT2R1421CCH** |
| 100 | 4 | 2 | OH/UG | — | #6–250 kcmil | #8–2/0 cu/al | 3-5/16 hub opening<br>3-5/16 hub cover plate | **UT2R1421BCH** |
| 100 | 4 | 3 | OH/UG | Horn | #6–250 kcmil | #8–2/0 cu/al | 3-5/16 hub opening | **UHT3R1121BCH** |
| 100 | 4 | 3 | OH/UG | — | #6–250 kcmil | #8–2/0 cu/al | 3-5/16 hub opening | **UT3R1121BCH** |

***Notes***

① Aluminum enclosure.

For dimensions, see **Pages V1-T4-23** and **V1-T4-24**.

## Horizontal Design—Multi Position Ring Type

| Ampere Rating | Jaws | Position | Service | Bypass | Connections Line | Load | Opening, Hub or Closure Plate | Catalog Number |
|---|---|---|---|---|---|---|---|---|
| 200 | 4 | 2 | OH/UG | — | 1/0–500 kcmil cu/al | #8–250 kcmil | 5x5 hub opening | **U2R2352TCRCH** |
| 200 | 4 | 2 | OH/UG | — | #6–350 kcmil | #8–250 kcmil | 5x5 hub cover plate | **URT2R2332UCH** |
| 200 | 5 | 4 | OH/UG | — | 1/0–500 kcmil cu/al | #8–250 kcmil | Large 5x5 hub opening | **U4R2352TCRCH** |
| 125 | 5 | 2 | OH | — | #8–350 kcmil | #8–2/0 cu/al | Hub opening | **U2V1031BCRCH** ① |
| 125 | 5 | 3 | OH | — | #8–350 kcmil | #8–2/0 cu/al | Hub opening | **U3V1031BCRCH** ① |
| 100 | 5 | 2 | OH/UG | — | #6–250 kcmil | #8–2/0 cu/al | 3-5/16 opening | **U2R1121BCRCH** |
| 100 | 5 | 3 | OH/UG | — | #6–250 kcmil | #8–2/0 cu/al | 3-5/16 opening | **U3R1121BCRCH** |
| 100 | 5 | 4 | OH/UG | — | #6–250 kcmil | #8–2/0 cu/al | 3-5/16 opening | **U4R1121BCRCH** |
| 100 | 5 | 5 | OH/UG | — | #6–250 kcmil | #8–2/0 cu/al | 3-5/16 opening | **U5R1121BCRCH** |

***Notes***

① Vertical gang.

For dimensions, see **Pages V1-T4-23** and **V1-T4-24**.

## Dimensions

Approximate Dimensions in Inches (mm)

### Horizontal Design—Multi Position Ringless

| Catalog Number | Height | Width | Depth |
|---|---|---|---|
| 1004401BCH | 14.13 (358.9) | 24.31 (617.5) | 5.38 (136.7) |
| 1004404BCH | 14.13 (358.9) | 32.47 (824.7) | 5.38 (136.7) |
| 1004418ACH | 14.13 (358.9) | 24.31 (617.5) | 5.38 (136.7) |
| 1006737BCH | 14.13 (358.9) | 24.31 (617.5) | 5.38 (136.7) |
| 1007700CH | 14.13 (358.9) | 24.31 (617.5) | 5.38 (136.7) |
| 1007701CH | 14.13 (358.9) | 32.47 (824.7) | 5.38 (136.7) |
| 1008842CH | 14.13 (358.9) | 24.31 (617.5) | 5.38 (136.7) |
| 1008843CH | 14.13 (358.9) | 32.47 (824.7) | 5.38 (136.7) |
| 1008844CH | 14.13 (358.9) | 40.63 (1032.0) | 5.38 (136.7) |
| 1008958CH | 14.13 (358.9) | 24.31 (617.5) | 5.38 (136.7) |
| 1008959CH | 14.13 (358.9) | 32.47 (824.7) | 5.38 (136.7) |
| 1008960CH | 14.13 (358.9) | 40.63 (1032.0) | 5.38 (136.7) |
| 1009579ACH | 14.13 (358.9) | 54.78 (1391.4) | 5.38 (136.7) |
| U4R2352TDQCH | 14.13 (358.9) | 40.63 (1032.0) | 5.38 (136.7) |
| U5R2392TTDQCH | 14.13 (358.9) | 62.94 (1598.7) | 5.38 (136.7) |
| U6R2392TTDQCH | 14.13 (358.9) | 62.94 (1598.7) | 5.38 (136.7) |
| UBH4R2352TCH | 14.13 (358.9) | 40.63 (1032.0) | 5.38 (136.7) |
| UBH2R2332TCH | 14.13 (358.9) | 24.31 (617.5) | 5.38 (136.7) |
| UBH3R2332TCH | 14.13 (358.9) | 32.47 (824.7) | 5.38 (136.7) |
| UEHT4R2302UCH | 14.13 (358.9) | 40.63 (1032.0) | 5.38 (136.7) |
| UEHT3R2302UCH | 14.13 (358.9) | 32.47 (824.7) | 5.38 (136.7) |
| UEHT2R2302UCH | 14.13 (358.9) | 24.31 (617.5) | 5.38 (136.7) |
| UHI2R2332ACVCH | 14.13 (358.9) | 24.31 (617.5) | 5.38 (136.7) |
| UHI2R2332TCVCH | 14.13 (358.9) | 24.31 (617.5) | 5.38 (136.7) |
| UHI4R2352ACVCH | 14.13 (358.9) | 40.63 (1032.0) | 5.38 (136.7) |
| UHTT2R2332UCH | 14.13 (358.9) | 24.31 (617.5) | 5.38 (136.7) |
| UHT2R2332TCH | 14.13 (358.9) | 24.31 (617.5) | 5.38 (136.7) |
| UHT3R2332TCH | 14.13 (358.9) | 32.94 (836.7) | 5.38 (136.7) |
| UHT3R2352UCH | 14.13 (358.9) | 32.47 (824.7) | 5.38 (136.7) |
| UHT4R2352TCH | 14.13 (358.9) | 40.63 (1032.0) | 5.38 (136.7) |
| UT4R2352UFLCH | 14.13 (358.9) | 40.63 (1032.0) | 5.38 (136.7) |
| UHT4R2352UCH | 14.13 (358.9) | 40.63 (1032.0) | 5.38 (136.7) |
| UT2H52353TCH | 23.56 (598.4) | 32.78 (832.6) | 6.00 (152.4) |
| UHT2R2332UCH | 14.13 (358.9) | 24.31 (617.5) | 5.38 (136.7) |
| UT2R2332BCH | 14.13 (358.9) | 24.31 (617.5) | 5.38 (136.7) |
| UAT2R2332TCH ① | 14.13 (358.9) | 24.31 (617.5) | 5.38 (136.7) |
| UT2R2332TCH | 14.13 (358.9) | 24.31 (617.5) | 5.38 (136.7) |
| U2R2332TCPLCH | 14.13 (358.9) | 24.31 (617.5) | 5.38 (136.7) |
| U2R2332UCPLCH | 14.13 (358.9) | 24.31 (617.5) | 5.38 (136.7) |
| U2R2332TDQCH | 14.13 (358.9) | 24.31 (617.5) | 5.38 (136.7) |
| UT2R2332UCH | 14.13 (358.9) | 24.31 (617.5) | 5.38 (136.7) |
| U3R2332TDQCH | 14.13 (358.9) | 32.47 (824.7) | 5.38 (136.7) |
| UT3H42353TCH | 23.56 (598.4) | 43.91 (1115.3) | 6.00 (152.4) |
| UT3H52353TCH | 23.56 (598.4) | 43.91 (1115.3) | 6.00 (152.4) |
| UT3H72353UHLCH | 23.56 (598.4) | 43.91 (1115.3) | 5.38 (136.7) |

### Horizontal Design—Multi Position Ringless, continued

| Catalog Number | Height | Width | Depth |
|---|---|---|---|
| UT3R2332TCH | 14.13 (358.9) | 32.47 (824.7) | 5.38 (136.7) |
| UT3R2332UCH | 14.13 (358.9) | 32.47 (824.7) | 5.38 (136.7) |
| UT3R2352TCH | 14.13 (358.9) | 40.63 (1032.0) | 5.38 (136.7) |
| UT4R2352TCH | 14.13 (358.9) | 40.63 (1032.0) | 5.38 (136.7) |
| UHT5R2392TTCH | 14.13 (358.9) | 54.78 (1391.4) | 5.38 (136.7) |
| UT5R2392TTCH | 14.13 (358.9) | 54.78 (1391.4) | 5.38 (136.7) |
| UT5H72393UUHLCH | 29.56 (750.8) | 72.15 (1832.6) | 6.00 (152.4) |
| UHT6R2392TTCH | 14.13 (358.9) | 62.94 (1598.7) | 5.38 (136.7) |
| UT6R2392TTCH | 14.13 (358.9) | 62.94 (1598.7) | 5.38 (136.7) |
| UT6R2392UUFLCH | 14.13 (358.9) | 62.94 (1598.7) | 5.38 (136.7) |
| UT6H72393UUHLCH | 23.56 (598.4) | 83.28 (2115.3) | 6.00 (152.4) |
| UHT6R2392TTCH | 14.13 (358.9) | 62.94 (1598.7) | 5.38 (136.7) |
| U2R5432BDQCH | 14.13 (358.9) | 20.16 (512.1) | 5.38 (136.7) |
| UT5R5632BCH | 14.13 (358.9) | 48.63 (1235.2) | 5.38 (136.7) |
| UT6R1131BCH | 14.13 (358.9) | 56.93 (1446.0) | 4.50 (114.3) |
| 1004426ACH | 14.13 (358.9) | 24.31 (617.5) | 4.50 (114.3) |
| 1008951CH | 14.13 (358.9) | 24.31 (617.5) | 4.50 (114.3) |
| 1008952CH | 14.13 (358.9) | 32.47 (824.7) | 4.50 (114.3) |
| 1009693CH | 14.13 (358.9) | 24.16 (613.7) | 5.38 (136.7) |
| 1009694CH | 14.13 (358.9) | 32.31 (820.7) | 5.38 (136.7) |
| 1009695CH | 14.13 (358.9) | 49.94 (1268.5) | 5.38 (136.7) |
| 1009696CH | 14.13 (358.9) | 48.63 (1235.2) | 5.38 (136.7) |
| UATZ6R1131CFLCH | 14.13 (358.9) | 56.94 (1446.3) | 4.50 (114.3) |
| UBH2R1121BCH | 14.13 (358.9) | 24.94 (633.5) | 4.50 (114.3) |
| UBH3R1121BCH | 14.13 (358.9) | 32.47 (824.7) | 4.50 (114.3) |
| UBH4R1121BCH | 14.13 (358.9) | 40.63 (1032.0) | 4.50 (114.3) |
| UHT2R1121BCH | 14.13 (358.9) | 24.31 (617.5) | 4.50 (114.3) |
| UT4R1121BCH | 14.13 (358.9) | 40.63 (1032.0) | 4.50 (114.3) |
| UT4R1121CCH | 14.13 (358.9) | 40.63 (1032.0) | 4.50 (114.3) |
| UHT4R1121BCH | 14.13 (358.9) | 40.63 (1032.0) | 4.50 (114.3) |
| UHT5R1121BCH | 14.13 (358.9) | 48.78 (1239.0) | 4.50 (114.3) |
| UT5R1121BCH | 14.13 (358.9) | 48.78 (1239.0) | 4.50 (114.3) |
| UT5R1121CCH | 14.13 (358.9) | 48.78 (1239.0) | 4.50 (114.3) |
| UT2R1121BCH | 14.13 (358.9) | 24.31 (617.5) | 4.50 (114.3) |
| UT2R1121CCH | 14.13 (358.9) | 24.31 (617.5) | 4.50 (114.3) |
| UHT2R1421CCH | 14.13 (358.9) | 20.16 (512.1) | 5.38 (136.7) |
| UT2R1421BCH | 14.13 (358.9) | 20.16 (512.1) | 5.38 (136.7) |
| UHT3R1121BCH | 14.13 (358.9) | 32.47 (824.7) | 4.50 (114.3) |
| UT3R1121BCH | 14.13 (358.9) | 32.47 (824.7) | 4.50 (114.3) |

***Note***

① Aluminum enclosure.

Approximate Dimensions in Inches (mm)

### Horizontal Design—Multi Position Ring Type

| Catalog Number | Height | Width | Depth |
|---|---|---|---|
| **U2R2352TCRCH** | 14.13 (358.9) | 24.31 (617.5) | 5.38 (136.7) |
| **URT2R2332UCH** | 14.13 (358.9) | 24.31 (617.5) | 5.38 (136.7) |
| **U4R2352TCRCH** | 14.13 (358.9) | 48.00 (1219.2) | 5.38 (136.7) |
| **U2V1031BCRCH** ① | 8.00 (203.2) | 25.63 (650.9) | 4.38 (111.1) |
| **U3V1031BCRCH** ① | 8.00 (203.2) | 35.88 (911.2) | 4.38 (111.1) |
| **U2R1121BCRCH** | 14.13 (358.9) | 28.00 (711.2) | 4.50 (114.3) |
| **U3R1121BCRCH** | 14.13 (358.9) | 38.00 (965.2) | 4.50 (114.3) |
| **U4R1121BCRCH** | 14.13 (358.9) | 48.00 (1219.2) | 4.50 (114.3) |
| **U5R1121BCRCH** | 14.13 (358.9) | 58.00 (1473.2) | 4.50 (114.3) |

***Note***

① Vertical gang.

Instrument Rated Sockets

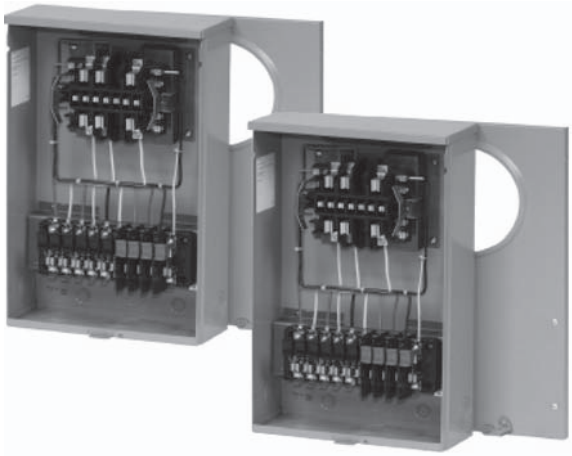

## Contents

| *Description* | *Page* |
|---|---|
| Product Selection | **V1-T4-26** |
| Dimensions | **V1-T4-26** |



## Product Description

- Available in 6, 7, 8 and 13 terminal designs
- 20 A ratings standard
- Multiple service designs available (overhead, underground, overhead/ underground)
- Multiple hub opening and closure plate sizes available
- 600 Vac rated
- Single cover/dual cover availability
- Provisional test switches and factory-installed test switch designs available

## Product Selection

USTS132CCH

### Instrument Rated Sockets

| Ampere Rating | Jaws | Service | Opening, Hub or Closure Plate | Catalog Number |
|---|---|---|---|---|
| 20 | 13 terminal | UG | Solid top | **USTH131A123CH** |
| 20 | 13 terminal | OH/UG | 3-5/16 hub cover plate | **USTS131B102CH** |
| 20 | 13 terminal | OH/UG | 3-5/16 hub cover plate | **USTS132B101CH** |
| 20 | 13 terminal | OH/UG | 3-5/16 hub cover plate | **USTS132CCH** |
| 20 | 13 terminal | OH/UG | 1-inch bolt-on hub | **1008694ACH** |
| 20 | 8 terminal | OH/UG | 1-inch bolt-on hub | **1008695ACH** |
| 20 | 13 terminal | N/A | N/A | **1007003BCH** |
| 20 | 13 terminal | Solid top and bottom | Solid top | **1007003CCH** |
| 20 | 13 terminal | OH/UG | 3-5/16 hub cover plate | **USTL131C207CH** |
| 20 | 13 terminal | OH/UG | Hub opening | **USTS131BCH** |
| 20 | 13 terminal | OH/UG | 1-1/4-inch bolt-on hub | **USTS131L143CH** |
| 20 | 13 terminal | N/A | N/A | **USTS132BCH** |
| 20 | 6 terminal | OH/UG | Hub opening | **USTS61B138CH** |
| 20 | 6 terminal | OH/UG | Hub opening | **UST61BCH** |
| 20 | 8 terminal | OH/UG | Hub opening | **USTS82B166CH** |
| 20 | 8 terminal | N/A | Solid top and bottom | **1007361BCH** |
| N/A | N/A | N/A | N/A | **1008539CH** |
| 20 | 13 terminal | OH/UG | 3-5/16 hub cover plate | **UASTS131C226CH** |
| 20 | 13 terminal | OH | 3-5/16 hub cover plate | **1004671CH** |
| 20 | 7 terminal | OH | 3-5/16 hub cover plate | **ULTS131CCH** |
| 20 | 6 terminal | UG | Solid top | **STL61A433CH** |
| 20 | 13 terminal | UG | Solid top | **STL131A120CH** |

## Dimensions

Approximate Dimensions in Inches (mm)

### Instrument Rated Sockets

| Catalog Number | Height | Width | Depth |
|---|---|---|---|
| **USTH131A123CH** | 20.00 (304.8) | 12.00 (304.8) | 4.36 (110.7) |
| **USTS131B102CH** | 20.00 (304.8) | 12.00 (304.8) | 4.36 (110.7) |
| **USTS132B101CH** | 20.00 (304.8) | 12.00 (304.8) | 4.36 (110.7) |
| **USTS132CCH** | 20.00 (304.8) | 12.00 (304.8) | 4.36 (110.7) |
| **1008694ACH** | 20.00 (304.8) | 12.00 (304.8) | 4.36 (110.7) |
| **1008695ACH** | 20.00 (304.8) | 12.00 (304.8) | 4.36 (110.7) |
| **1007003BCH** | N/A | N/A | N/A |
| **1007003CCH** | 16.50 (419.1) | 14.00 (355.6) | 3.50 (88.9) |
| **USTL131207CH** | 20.00 (304.8) | 12.00 (304.8) | 4.35 (110.5) |
| **USTS131BCH** | 20.00 (304.8) | 12.00 (304.8) | 4.35 (110.5) |
| **USTS131L143CH** | 20.00 (304.8) | 12.00 (304.8) | 4.35 (110.5) |
| **USTS132BCH** | N/A | N/A | N/A |
| **USTS61B138CH** | 20.00 (304.8) | 12.00 (304.8) | 4.35 (110.5) |
| **UST61BCH** | 20.00 (304.8) | 12.00 (304.8) | 4.35 (110.5) |
| **USTS82B166CH** | 20.00 (304.8) | 12.00 (304.8) | 4.35 (110.5) |
| **1007361BCH** | 16.50 (419.1) | 14.00 (355.6) | 3.50 (88.9) |
| **1008539CH** | N/A | N/A | N/A |
| **UASTS131C226CH** | 20.00 (304.8) | 12.00 (304.8) | 4.35 (110.5) |
| **1004671CH** | 17.00 (431.8) | 10.00 (254.0) | 5.00 (127.0) |
| **ULTS131CCH** | 22.00 (558.8) | 12.00 (304.8) | 4.94 (125.5) |

Residential Pedestals

## Contents

| *Description* | *Page* |
|---|---|
| Product Selection | **V1-T4-28** |
| Dimensions | **V1-T4-28** |



## Product Description

- Available in 100 A, 200 A, 300 A and 320 A designs
- Available in 4- or 5-jaw configurations
- Underground service design is standard
- Bypass options (lever, horn) are available
- Solid top designs

## Product Selection

UHTRP242363CH

### Residential Pedestals

| Ampere Rating | Jaws | Service | Bypass | Connections Line | Load | Opening, Hub or Closure Plate | Catalog Number |
|---|---|---|---|---|---|---|---|
| 320 | 4 | UG | — | 3/8-inch studs | 3/8-inch studs | Solid top | **1008847CH** |
| 320 | 4 | UG | Lever | #6–350 kcmil line and line neutral | 2/0–250 kcmil load and load neutral | Solid top | **1009017CH** ① |
| 300 | 4 | UG | Lever | #6–350 kcmil line and line neutral | 2/0–250 kcmil load and load neutral | Solid top | |
| 200 | 4 | UG | Horn | 4/0 compression (line) 2/0 compression (neutral) | #6–250 kcmil load and load neutral | Solid top | **1006388CH** |
| 200 | 4 | UG | Horn | #8–350 kcmil | #8–350 kcmil | Solid top | **UHTRP242363CH** |
| 200 | 4 | UG | Horn | #6–350 kcmil line and line neutral | #6–250 kcmil load neutral | Solid top | **1008846CH** |
| 200 | 4 | UG | Horn | #6–350 kcmil line and line neutral | #6–250 kcmil load neutral | N/A | **1008961CH** |
| 200 | 5 | N/A | N/A | N/A | N/A | N/A | **1008966CH** |
| 200 | 4 | UG | — | #6–350 kcmil line and line neutral | #6–350 kcmil load and load neutral | Solid top | **1009264CH** |
| 200 | 4 | UG | — | 4/0 compression (line) 2/0 compression (neutral) | #6–350 kcmil load and load neutral | Solid top | **1009265CH** |
| 100 | 4 | UG | — | #6–350 kcmil line and line neutral | #6–250 kcmil load neutral | Solid top | **1009078CH** |

### Pedestal Extension Kits

| Connections Line | Load | Catalog Number |
|---|---|---|
| Pedestal extension kit for 1008846CH | Pedestal extension kit for 1008846CH | **1009021CH** |
| | | **1009022CH** |
| | | **1009026CH** |

## Dimensions

Approximate Dimensions in Inches (mm)

### Residential Pedestals

| Catalog Number | Height | Width | Depth |
|---|---|---|---|
| **1008847CH** | 58.00 (1473.2) | 12.97 (329.4) | 4.93 (125.2) |
| **1009017CH** ① | 63.00 (1600.2) | 12.96 (329.2) | 4.93 (125.2) |
| **1006388CH** | 61.00 (1549.4) | 8.96 (227.6) | 4.93 (125.2) |
| **UHTRP242363CH** | 62.63 (1590.8) | 8.97 (227.8) | 4.94 (125.5) |
| **1008846CH** | 70.00 (1778.0) | 11.00 (279.4) | 6.00 (152.4) |
| **1008961CH** | 69.93 (1776.2) | N/A | 6.00 (152.4) |
| **1008966CH** | N/A | N/A | N/A |
| **1009264CH** | 74.00 (1879.6) | 8.96 (227.6) | 4.93 (125.2) |
| **1009265CH** | 74.00 (1879.6) | 8.97 (227.8) | 4.94 (125.5) |
| **1009078CH** | 69.93 (1776.2) | 11.00 (279.4) | 6.00 (152.4) |

### Pedestal Extension Kits

| Catalog Number | Height | Width | Depth |
|---|---|---|---|
| **1009021CH** | 18.00 (457.2) | 11.00 (279.4) | 6.00 (152.4) |
| **1009022CH** | 18.00 (457.2) | 12.96 (329.2) | 4.93 (125.2) |
| **1009026CH** | 30.00 (762.0) | 12.96 (329.2) | 4.93 (125.2) |

***Note***

① 200 A breakers.

## Product Description

This section will help you better understand the features and benefits of the 125 A and 200 A Eaton designed meter socket.

## Features and Benefits

***Construction Features***

1. High strength, glass-filled meter block assembly, lay-in connectors with captive slide nut and screw.

2. 100% plated copper alloy meter jaw with reinforcing spring clip and meter guide.

3. Extruded neutral lug with integral triplex ground and quadplex ground provision.

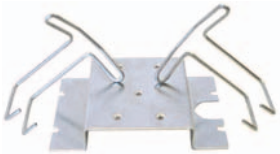

4. Bridge and meter supports are 100% zinc chromate plated.

**200 A Ringless Block Assembly With Horn Bypass**

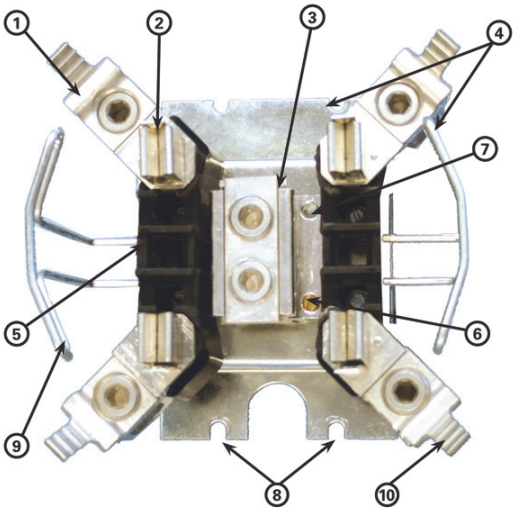


5. Fifth terminal locating hole in 9 o'clock position.
6. Triplex ground is a standard feature.
7. Quadplex ground provision.
8. Durable "four-point" bridge mounting (2 top, 2 bottom).
9. Extra rigid meter support for ringless sockets.
10. Optional, integral horn bypass extruded on slide nut. Horn is ribbed for secure attachment to utility bypass jumpers. Field-installable horn bypass kit available.

## Product Selection

### Meter Socket Accessories

| Description | Part Number |
|---|---|
| **Hub Closure Plates** | |
| Hub closure plate meter socket accessories | **ARP00002CHB** |
| Clam shell hub closure plate meter socket accessories | **ARP00002CHBCS** |
| 1-inch hub closure plate meter socket accessories | **ARP00003CH1** |
| Clam shell 1-inch hub closure plate—small opening | **ARP00003CH1CS** |
| 1-1/4-inch hub closure plate meter socket accessories | **ARP00004CH12** |
| Clam shell 1-1/4-inch hub closure plate—small opening | **ARP00004CH12CS** |
| 1-1/2-inch hub closure plate meter socket accessories | **ARP00005CH15** |
| Clam shell 1-1/2-inch hub closure plate—small opening | **ARP00005CH15CS** |
| 2-inch hub closure plate meter socket accessories | **ARP00006CH2** |
| Aluminum hub closure plate for single sockets | **ARP00008CH** |
| Large hub cover plate | **ARP00016CHB** |
| **Hubs** | |
| 2-inch hub with large diameter opening | **ARP00017CH2** |
| 2-1/2-inch hub for meter socket accessories | **ARP00007CH25** |
| Clam shell 2-1/2-inch hub for meter socket accessories | **ARP00007CH25CS** |
| 2.5-inch hub with large diameter opening | **ARP00018CH25** |
| 3-inch hub | **ARP00019CH3** |
| 3-1/2-inch hub for meter sockets | **ARP00020CH35** |
| 4-inch hub | **ARP00021CH4** |
| Hub adapter from large opening to small opening | **ARP00015CHAP** |
| **Lug Kits** | |
| (2) #6–250 kcmil, double barrel lug for 4, 5 and 7 terminal 3/8-inch stud sockets | **ARP00118CH** |
| #4–600 or (2) 1/0–250 kcmil, single barrel lug for 4, 5 and 7 terminal 3/8-inch stud sockets | **ARP00429CH** |
| #6–350 kcmil, single barrel lug for 4, 5 and 7 terminal 3/8-inch stud sockets | **ARP00119CH** |
| #4–600 kcmil, single barrel lug for 4, 5 and 7 terminal 3/8-inch stud sockets | **ARP00129CH** |
| (2) #6–350 kcmil, double barrel lug for 4 terminal 3/8-inch stud sockets | **ARP00427CH** |
| **Miscellaneous** | |
| Screw sealing ring for single meter sockets | **ARP00027CH** |
| Fifth jaw kit | **ARP00035CHJ** |
| Fifth jaw for bolt on meter | **ARP00326CH** |
| Neutral insulating kit for lever bypass sockets only | **ARP00759CH** |
| 100 A meter socket horn cap assembly kit | **ARP00777CH** |
| Fifth jaw kit for 320 A offset socket | **ARP00862CH** |
| HQ anti-inversion clip for single meter sockets | **ARP00984CH** |
| Fifth jaw for Chicago and Wisconsin pedestal | **ARP01085CH** |
| 350 kcmil BNS cap assembly kit for meter sockets | **ARP01226CH** |
| Right hand block assembly with Z Bar | **ARP01258CH** |
| Left hand block assembly with Z Bar | **ARP01414CH** |
| Meter pack trough closure plate kit | **ARP01565CH** |
| 2/0 connector kit for MBB and MBP socket breaker | **ARP01612CH** |

## Cross-Reference

### Meter Sockets

| Description | Manufacturer<br>Eaton<br>Part Number | Milbank<br>Part Number |
|---|---|---|
| 125 A, OH/UG, ringless, triplex ground, hub opening | **UTRS101BE** | **U7487-RL-TG** |
| 125 A, OH/UG, ringless, triplex ground, hub cover plate | **UTRS101CE** | **U7487-XL-TG** |
| 125 A, OH/UG, ringless, triplex ground, hub opening, horn bypass | **UHTRS101BE** | **U7487-RL-TG-KK** |
| 125 A, OH/UG, ringless, triplex ground, hub cover plate, horn bypass | **UHTRS101CE** | **U7487-XL-TG-KK** |
| 125 A, OH/UG, ringless, triplex ground, hub opening, fifth terminal | **UTRS101BCH + MSR5TK** | **U7487-RL-TG-5T** |
| 125 A, OH/UG, ringless, triplex ground, hub cover plate, fifth terminal | **UTRS101CE + MSR5TK** | **U7487-XL-TG-5T** |
| 125 A, OH/UG, ringless, triplex ground, hub opening, horn bypass, fifth terminal | **UHTRS101BCH + MSR5TK** | **U7487-RL-TG-KK-5T** |
| 125 A, OH/UG, ringless, triplex ground, hub cover plate, horn bypass, fifth terminal | **UGHTRS101CE + MSR5TK** | **U7487-XL-TG-KK-5T** |
| 200 A, OH, ringless, triplex ground, hub opening | **UTRS202BCH** | **U7021-RL-TG** |
| 200 A, OH, ringless, triplex ground, hub cover plate | **UTRS202CCH** | **U7021-XL-TG** |
| 200 A, OH, ringless, triplex ground, hub opening, horn bypass | **UHTRS202BCH** | **U7021-RL-TG-KK** |
| 200 A, OH, ringless, triplex ground, hub cover plate, horn bypass | **UHTRS202CCH** | **U7021-RL-TG-KK** |
| 200 A, OH, ringless, triplex ground, hub opening, fifth terminal | **UGTRS202BCH** | **U7021-RL-TG-5T** |
| 200 A, OH, ringless, triplex ground, hub cover plate, fifth terminal | **UGTRS202CCH** | **U7021-XL-TG-5T** |
| 200 A, OH, ringless, triplex ground, hub opening, horn bypass, fifth terminal | **UGHTRS202BCH** | **U7021-RL-TG-KK-5T** |
| 200 A, OH, ringless, triplex ground, hub cover plate, horn bypass, fifth terminal | **UGHTRS202CCH** | **U7021-RL-TG-KK-5T** |
| 200 A, OH/UG, ringless, triplex ground, hub opening, 250 kcmil lugs | **UTRS212BCH** | **No cross (no 250 kcmil lugs)** |
| 200 A, OH/UG, ringless, triplex ground, hub cover plate, 250 kcmil lugs | **UTRS212CCH** | **No cross (no 250 kcmil lugs)** |
| 200 A, OH/UG, ringless, triplex ground, hub opening, horn bypass, 250 kcmil lugs | **UHTRS212BCH** | **No cross (no 250 kcmil lugs)** |
| 200 A, OH/UG, ringless, triplex ground, hub cover plate, horn bypass, 250 kcmil lugs | **UHTRS212CCH** | **No cross (no 250 kcmil lugs)** |
| 200 A, OH/UG, ringless, triplex ground, hub opening, fifth terminal, 250 kcmil lugs | **UGTRS212BCH** | **No cross (no 250 kcmil lugs)** |
| 200 A, OH/UG, ringless, triplex ground, hub cover plate, fifth terminal, 250 kcmil lugs | **UGTRS212CCH** | **No cross (no 250 kcmil lugs)** |
| 200 A, OH/ UG, ringless, triplex ground, hub opening, horn bypass, fifth terminal, 250 kcmil lugs | **UGHTRS212BCH** | **No cross (no 250 kcmil lugs)** |
| 200 A, OH/UG, ringless, triplex ground, hub cover plate, horn bypass, fifth terminal, 250 kcmil lugs | **UGHTRS212CCH** | **No cross (no 250 kcmil lugs)** |
| 200 A, OH/UG, ringless, triplex ground, hub opening, 350 kcmil lugs | **UTRS213BE** | **U7040-RL-TG** |
| 200 A, OH/UG, ringless, triplex ground, hub cover plate, 350 kcmil lugs | **UTRS213CE** | **U7040-XL-TG** |
| 200 A, OH/UG, ringless, triplex ground, hub opening, horn bypass, 350 kcmil lugs | **UHTRS213BE** | **U7040-RL-TG-KK** |
| 200 A, OH/UG, ringless, triplex ground, hub cover plate, horn bypass, 350 kcmil lugs | **UHTRS213CE** | **U7040-XL-TG-KK** |
| 200 A, OH/UG, ringless, triplex ground, hub opening, fifth terminal, 350 kcmil lugs | **UGTRS213BE** | **U7040-RL-TG-5T** |
| 200 A, OH/UG, ringless, triplex ground, hub cover plate, fifth terminal, 350 kcmil lugs | **UGTRS213CE** | **U7040-XL-TG-5T** |
| 200 A, OH/ UG, ringless, triplex ground, hub opening, horn bypass, fifth terminal, 350 kcmil lugs | **UGHTRS213BE** | **U7040-RL-TG-KK-5T** |
| 200 A, OH/UG, ringless, triplex ground, hub cover plate, horn bypass, fifth terminal, 350 kcmil lugs | **UGHTRS213CE** | **U7040-XL-TG-KK-5T** |
| 200 A, UG, ringless, triplex ground, solid top | **UTRS223ACH** | **U1980-0-TG** |
| 200 A, UG, ringless, triplex ground, solid top, horn bypass | **UHTRS223ACH** | **U1980-0-TG-KK** |
| 200 A, UG, ringless, triplex ground, solid top, fifth terminal | **UGTRS223ACH** | **U1980-O-TG-5T** |
| 200 A, UG, ringless, triplex ground, solid top, horn bypass, fifth terminal | **UGHTRS223ACH** | **U1980-O-TG-KK-5T** |

## Lever Bypass

| Description | Manufacturer Eaton Part Number | Milbank Part Number |
|---|---|---|
| 200 A, OH, lever bypass, 4 terminal, small hub opening | UTE4203BCH | U9800-RL |
| 200 A, OH, lever bypass, 4 terminal, hub cover plate | UTH4203CCH | U9800-XL |
| 200 A, OH, lever bypass, 4 terminal, large hub opening | UTH4203TCH | U9800-R |
| 200 A, OH, lever bypass, 4 terminal, large hub cover plate | UTH4203UCH | U9800-X |
| 200 A, OH, lever bypass, 5 terminal, small hub opening | UTE5203BCH | U4550-RL |
| 200 A, OH, lever bypass, 5 terminal, hub cover plate | UTH5203CCH | U4550-XL |
| 200 A, OH, lever bypass, 5 terminal, large hub opening | UTH5203TCH | U9559-R |
| 200 A, OH, lever bypass, 5 terminal, large hub cover plate | UTH5203UCH | U9550-X |
| 200 A, OH, lever bypass, 7 terminal, small hub opening | UTE7203BCH | U4701-RL |
| 200 A, OH, lever bypass, 7 terminal, hub cover plate | UTH7203CCH | U4701-XL |
| 200 A, OH, lever bypass, 7 terminal, large hub opening | UTE7203TCH | U4701-R |
| 200 A, OH, lever bypass, 7 terminal, large hub cover plate | UTH7203UCH | U4701-X |
| 200 A, OH/UG, lever bypass, 4 terminal, small hub opening | UTE4213BCH | U9801-RL |
| 200 A, OH/UG, lever bypass, 4 terminal, hub cover plate | UTE4213CCH | U9801-XL |
| 200 A, OH/UG, lever bypass, 4 terminal, large hub opening | UTE4213TCH | U9801-R |
| 200 A, OH/UG, lever bypass, 4 terminal, large hub cover plate | UTH4213UCH | U9801-XL |
| 200 A, OH/UG, lever bypass, 4 terminal, large hub opening with adapter plate | UTE4213ZCH | U9801-RRL |
| 200 A, OH/UG, lever bypass, 4 terminal, large hub opening with adapter and cover plate | UTH4213YCH | U9801-RXL |
| 200 A, OH/UG, lever bypass, 5 terminal, small hub opening | UTE5213BCH | U4551-RL |
| 200 A, OH/UG, lever bypass, 5 terminal, hub cover plate | UTE5213CCH | U4551-XL |
| 200 A, OH/UG, lever bypass, 5 terminal, large hub opening | UTE5213TCH | U9551-R |
| 200 A, OH/UG, lever bypass, 5 terminal, large hub cover plate | UTH5213UCH | U9551-X |
| 200 A, OH/UG, lever bypass, 5 terminal, large hub opening with adapter plate | UTE5213ZCH | U9551-RRL or U4551-RRL |
| 200 A, OH/UG, lever bypass, 5 terminal, large hub opening with adapter and cover plate | UTH5213YCH | U9551-RXL or U4551-RXL |
| 200 A, OH/UG, lever bypass, 7 terminal, small hub opening | UTE7213BCH | U9701-RL or U4701-RL |
| 200 A, OH/UG, lever bypass, 7 terminal, hub cover plate | UTE7213CCH | U9701-XL or U4701-XL |
| 200 A, OH/UG, lever bypass, 7 terminal, large hub opening | UTE7213TCH | U9701-R or U4701-R |
| 200 A, OH/UG, lever bypass, 7 terminal, large hub cover plate | UTE7213UCH | U9701-RX or U4701-RX |
| 200 A, OH/UG, lever bypass, 7 terminal, large hub opening with adapter plate | UTE7213ZCH | U9701-RRL or U4701-RRL |
| 200 A, OH/UG, lever bypass, 7 terminal, large hub opening with adapter and cover plate | UTH7213YCH | U9701-RXL or U4701-RXL |
| 320 A, OH, lever bypass, 4 terminal, large hub opening | UTH4300TCH | U1079-R or U1797-R |
| 320 A, OH, lever bypass, 4 terminal, large hub cover plate | UTH4300UCH | U1079-X or U1797X |
| 320 A, OH/UG, lever bypass, 4 terminal, large hub opening | UTH4330TCH | U2448-R or U2124-R |
| 320 A, OH/UG, lever bypass, 4 terminal, large hub cover plate | UTH4330UCH | U2448-RX or U2124-RX |
| 320 A, OH, lever bypass, 7 terminal, large hub opening | UTH7300TCH | — |
| 320 A, OH, lever bypass, 7 terminal, large hub cover plate | UTH7300UCH | — |
| 320 A, OH/UG, lever bypass, 7 terminal, large hub opening | UTH7330TCH | U2120-R |
| 320 A, OH/UG, lever bypass, 7 terminal, large hub cover plate | UTH7330UCH | U2120-X |

## Accessories

| Description | Manufacturer<br>Eaton<br>Part Number | Milbank<br>Part Number |
|---|---|---|
| Small hub cover plate | **ARP00002CHB** | **A7551** |
| 1-inch hub | **ARP00003CH1** | **A7514** |
| 1-1/4-inch hub | **ARP00004CH12** | **A7515** |
| 1-1/2-inch hub | **ARP00005CH15** | **A7516** |
| 2-inch hub | **ARP00006CH2** | **A7517** |
| 2-1/2-inch hub | **ARP00007CH25** | **A7518** |
| 3-inch hub | **ARP00019CH3** | **A8110** |
| 3-1/2-inch hub | **ARP00020CH35** | **A8111** |
| 4-inch hub | **ARP00021CH4** | **A8112** |
| Large to small hub opening adapter plate | **ARP00015CHAP** | **S8324** |
| Large hub cover plate | **ARP00016CHB** | **S9064** |

**Mechanical Lugs**

## Contents

***Description***

Mechanical Lugs

## Product Description

- Single lug
- Extended tang single lug
- Extended tang triple lug
- Double lug
- Extended tang double lug
- Extended tang quadruple lug

## Product Selection

### Mechanical Lugs

| Description | Style Number |
|---|---|
| Single #14–#6 mechanical lug | **ESL146** |
| Single #14–2/0 mechanical lug | **ESL1420** |
| Single #6–250 kcmil mechanical lug | **ESL6250** |
| Single #4–500 kcmil mechanical lug | **ESL4500** |
| Double #14–2/0 mechanical lug | **EDL1420** |
| Double #6–250 kcmil mechanical lug | **EDL6250** |
| Extended tang single lug #6–350 kcmil | **EPBSL6350** |
| Extended tang single lug 300–800 kcmil | **EPBSL300800** |
| Extended tang double lug #6–350 kcmil | **EPBDL6350** |
| Extended tang double lug 300–800 kcmil | **EPBDL300800** |
| Extended tang triple lug #6–350 kcmil | **EPBTL6350** |
| Extended tang triple lug 300–800 kcmil | **EPBTL300800** |
| Extended tang quadruple lug #6–350 kcmil | **EPBQL6350** |
| Extended tang quadruple lug 300–750 kcmil | **EPBQL300800** |
| Extended tang single lug #2–600 kcmil | **EPBSL2600** |
| Extended tang single lug 500–1000 kcmil | **EPBSL5001000** |
| Extended tang triple lug #2–600 kcmil | **EPBTL2600** |

## Dimensions

Approximate Dimensions in Inches (mm)

### Mechanical Lugs

| Style Number | Height | Width | Length |
|---|---|---|---|
| **ESL146** | 2.50 (63.5) | 8.25 (82.6) | 3.50 (88.9) |
| **ESL1420** | 2.50 (63.5) | 10.50 (266.7) | 3.50 (88.9) |
| **ESL6250** | 2.50 (63.5) | 10.50 (266.7) | 3.50 (88.9) |
| **ESL4500** | 2.50 (63.5) | 10.50 (266.7) | 3.50 (88.9) |
| **EDL1420** | 3.50 (88.9) | 4.00 (101.6) | 3.50 (88.9) |
| **EDL6250** | 3.50 (88.9) | 3.75 (95.3) | 4.50 (114.3) |
| **EPBSL6350** | 2.50 (63.5) | 8.25 (82.6) | 3.50 (88.9) |
| **EPBSL300800** | 2.50 (63.5) | 10.50 (266.7) | 3.50 (88.9) |
| **EPBDL6350** | 3.50 (88.9) | 4.50 (114.3) | 5.50 (139.7) |
| **EPBDL300800** | 3.00 (76.2) | 10.50 (266.7) | 5.50 (139.7) |
| **EPBTL6350** | 3.50 (88.9) | 4.50 (114.3) | 5.50 (139.7) |
| **EPBTL300800** | 2.50 (63.5) | 10.00 (254.0) | 5.75 (146.0) |
| **EPBQL6350** | 2.25 (57.2) | 6.50 (165.1) | 6.00 (152.4) |
| **EPBQL300800** | 4.25 (108.0) | 8.50 (215.9) | 8.50 (215.9) |
| **EPBSL2600** | 2.50 (63.5) | 8.25 (82.6) | 3.50 (88.9) |
| **EPBSL5001000** | 2.50 (63.5) | 10.50 (266.7) | 3.50 (88.9) |
| **EPBTL2600** | 2.25 (57.2) | 6.50 (165.1) | 6.00 (152.4) |

**Communication Grounding Device**

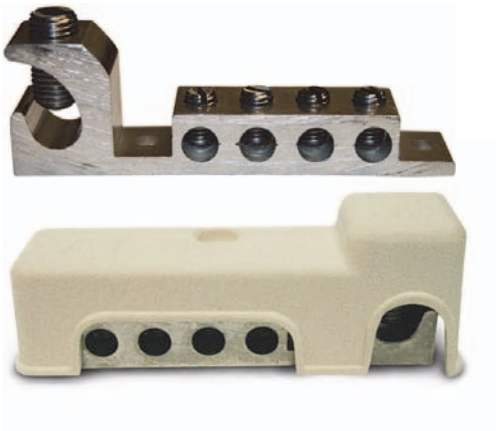

## Contents


| *Description* | *Page* |
|---|---|
| Wiring Diagram | **V1-T4-36** |
| Dimensions | **V1-T4-36** |




## Product Description

This product is required per the 2008 NEC Article 250.94 "Bonding for Other Systems."

This product is applied externally to residential homes, so that communications systems devices such as satellite, TV, cable and CATV can be properly bonded at a single point. This device has two mounting holes that can be used for easy installation.

## Features, Benefits and Functions

***Communication Grounding Device Features***

- Lay-in lug for ease of installation
- Four bonding terminals
- Heavy-duty zinc-plated steel screws included
- Two mounting holes to securely hold device into place
- For use with copper and aluminum conductors

***Cover Features***

- Outdoor rated reinforced glass polyester compound
- Suitable for UV exposure
- Paintable exterior, allowing for matching of exterior of home

## Standards and Certifications

- ETL listed

## Product Selection

### Communication Grounding Device

| Wire Range Bonding Conductor | Wire Range Ground Electrode | Quantity | Catalog Number |
|---|---|---|---|
| #14–#2–STR–SOL–CU<br>#12–#2–SRT–SOL–AL | #8–1/0–STR–SOL–CU/AL | (1) Clamshell | **MSEGR2CS** |
| #14–#2–STR–SOL–CU<br>#12–#2–SRT–SOL–AL | #8–1/0–STR–SOL–CU/AL | (10) Bulk pack | **MSEGR2** |

## Wiring Diagram

### Installation and Configuration

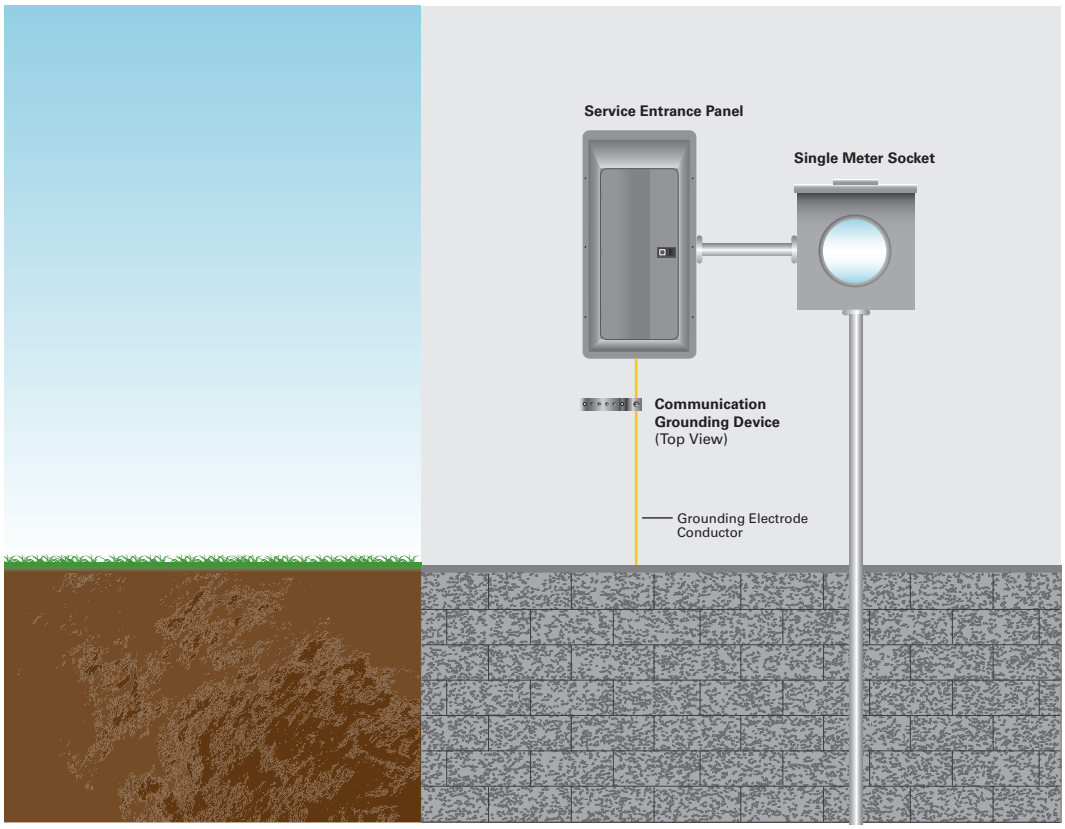


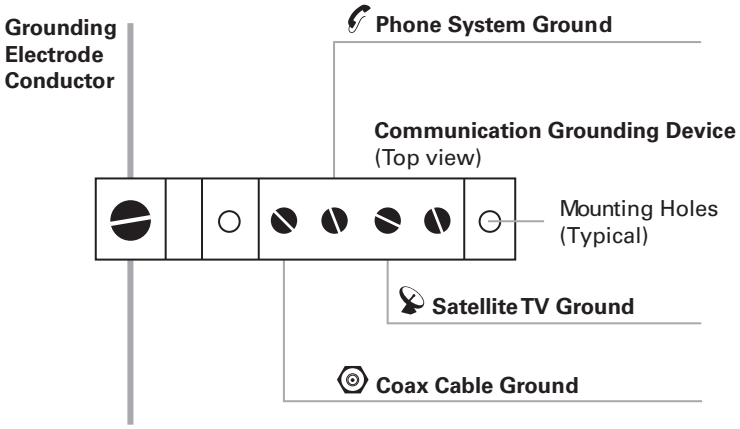


## Dimensions

Approximate Dimensions in Inches (mm)

### Communication Grounding Device

| Catalog Number | Length | Width | Height |
|---|---|---|---|
| MSEGR2CS | 0.75 (19.1) | 3.90 (99.1) | 1.20 (30.5) |
| MSEGR2 | 0.75 (19.1) | 3.90 (99.1) | 1.20 (30.5) |

Residential Meter Breakers

## Contents


| *Description* | *Page* |
|---|---|
| Residential Meter Breakers | |
| Non-EUSERC Combination Service Entrance Devices 100–200 A Styles | **V1-T4-39** |
| Meets EUSERC Requirements Service Entrance Devices 100–225 A. | **V1-T4-48** |
| West Coast All-In-One Design | **V1-T4-59** |
| Mechanical Interlock Cover | **V1-T4-65** |
| House Panels | **V1-T4-75** |
| Commercial Safety Sockets | **V1-T4-83** |
| CH Style Renovation Solutions | **V1-T4-86** |
| Aluminum Meter Breakers | **V1-T4-87** |




## Residential Meter Breakers

### Product Description

A meter breaker is service entrance equipment that consists of a single meter socket and loadcenter (circuit breaker distribution section) or meter socket and main breaker combined in one enclosure. Sometimes called Combos, All-in-Ones, Meter Centers or Meter Mains, these units are increasing in popularity as the socket and loadcenter or main breaker are located in one location, thus providing the contractor with a labor and material savings when installing.

### Application Description

In addition to residential installations, meter breakers are equally applicable for rural service entrance, mobile homes and construction site temporary power. Meter breakers are most often sold in the western, southwestern and southeastern United States. The popularity of meter breakers is continuing to increase as more utilities deregulate and pass the responsibility of supplying watthour meter sockets on to the electrical contractor.

#### *Application Considerations*

Eaton has the meter breaker to meet your application, offering:

- Non-EUSERC
- EUSERC/West Coast
- House panels
- Commercial safety socket

#### Non-EUSERC (Page V1-T4-39)

Eaton's line of non-EUSERC meter breakers are designed for customers served by utilities that are not members of EUSERC.

#### EUSERC/West Coast (Page V1-T4-59)

Eaton's line of EUSERC required devices adhere to the agreed upon standards. EUSERC utilities are predominately located in the western United States, but some eastern and midwestern utilities are also members. These units can also be used in many Non-EUSERC areas.

#### House Panels (Page V1-T4-75)

CH and BR Styles (**Page V1-T4-76**).

Meter breaker device rated at 300–400 A. Applied in EUSERC and non-EUSERC areas.

#### Commercial Safety Sockets (Page V1-T4-83)

Applied in EUSERC and non-EUSERC service areas and used in commercial applications.

### Features, Benefits and Functions

- Both Type BR and CH branch circuit breaker styles available
- Meets latest NEC wire bending space requirements
- Slotted sealing screws at hub with sealing provision provided
- Surface units are supplied with mounting tabs
- Semi-flush units are supplied with stucco flange
- Meter socket ring landing will accept locking security rings
- Overhead or underground service
- Fifth jaw can be installed in the 3 o'clock or 9 o'clock position
- Semi-flush with nail flange or surface mounting
- Meter mounting and underground pull sections are utility sealable
- Units are rated a minimum of 10 kAIC; some units are 22 kAIC
- Numerous units supplied with center keyhole for ease of mounting
- NEMA 3R rainproof construction

### Standards and Certifications

- UL Specification 414 (socket)
- UL File Number E52977
- AEIC-EEI-NEMA Standards (MSJ-7)
- Meet EUSERC utility requirements where noted
- Documented seismic qualified—UBC and CBC Title 24
- UL Specification 67 (panel)

Listed

### Technical Data and Specifications

- Ratings single-phase, three-wire, 120/240 Vac
- 100–225 A main breaker and main lug types
- 10,000 A rms symmetrical short-circuit rating
- Available kAIC ratings: 10 k with BW breaker, 22 k with CSR breaker and 35 k with CSH breaker

Consult TD.31F.01.T.E for dimensions, wiring diagrams and knockouts.

Residential Meter Breakers

*Standard Design Non-EUSERC Panel*

*Compact Design*

## Contents


| *Description* | *Page* |
|---|---|
| Residential Meter Breakers | **V1-T4-37** |
| Non-EUSERC Combination Service Entrance Devices 100–200 A Styles | |
| Meets EUSERC Requirements Service Entrance Devices 100–225 A. | **V1-T4-48** |
| West Coast All-In-One Design | **V1-T4-59** |
| Mechanical Interlock Cover | **V1-T4-65** |
| House Panels | **V1-T4-75** |
| Commercial Safety Sockets | **V1-T4-83** |
| CH Style Renovation Solutions | **V1-T4-86** |
| Aluminum Meter Breakers | **V1-T4-87** |




## Non-EUSERC Combination Service Entrance Devices 100–200 A Styles

### Product Description

A device that may include a meter socket, main breaker and loadcenter section within the same enclosure.

- Meter main = meter socket and main breaker
- Meter breaker = meter socket, main breaker and loadcenter section

### Application Description

Eaton's line of non-EUSERC meter breakers are designed for customers served by utilities that are not members of EUSERC.

### Features, Benefits and Functions

***Meter Mains and All-in-Ones***

- Single-phase, three-wire, 120/240 Vac,10 kAIC
- Larger lay-in lugs and 3-inch (76.2 mm) knockouts for ease of installation
- Box-type main lugs included
- Factory-installed neutral
- Hub provisions on top endwall. If hubs are required, order "DS" style
- Ring, ringless and ringless with horn bypass styles available
- Ringless style, provided with embossed covers and security latch for utility company lock
- Padlockable device covers provide additional measure of safety and help prevent tampering
- NEMA 3R rainproof construction

***Meter Mains***

- Meter socket and main breaker
- Stainless steel latches on meter compartments in MBP types
- No distribution section included

***All-in-Ones***

- Meter socket and loadcenter distribution section
- Stainless steel latches on meter compartments
- Several designs with horn bypass and fifth jaw
- Center-fed main breaker, lugs or provision
- Uses Type BR 1-inch (25.4 mm) wide branch breakers
- Special channel for top exit

## Catalog Number Selection

**MB 20 40 B 200 BT S _**

**Meter Breaker Type**
- **MB** = 1-inch BR Type
- **MBE** = 1-inch BR Type—EUSERC
- **CMB** = 3/4-Inch (19.1 mm) CH Type
- **CMBE** = 3/4-inch (19.1 mm) CH Type—EUSERC

**Spacing**
Number of spaces

**Poles**
Maximum number of poles

**Main**
- **B** = Main breaker included
- **P** = Provision for main
- **L** = Main lug

**Amperes**
Amperage of unit

**Breaker Feed**
- **BT** = Bottom and top
- **B** = Bottom only
- **T** = Top only

**Mounting**
- **S** = Surface
- **F** = Flush/stucco

**Accessories/Modifications**
- **D** = 5th jaw and horn bypass
- **CU** = Copper
- **C** = Single cover compact design
- **CR** = Two cover compact design

## Product Selection

**Note:** See knockout drawings on **Pages V1-T4-68 through V1-T4-74** for hub information.

**Standard Design Non-EUSERC Panel**

**Compact Design**

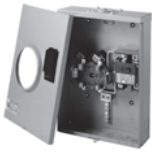

### Combination Service Entrance Devices—Non-EUSERC

| Ampere Rating | Bypass | Service | kAIC | Jaws | Distribution | Main | Branch Breaker Type | Dimensions and Enclosure Shape ① | Page Numbers Wiring | Page Numbers Knockout ① | Catalog Number |
|---|---|---|---|---|---|---|---|---|---|---|---|
| **Ring Style Meter Mains (no distribution section included)** | | | | | | | | | | | |
| 150 | None | OH/UG | 10 | 4 | None | CSR2150 | None | 13 | **V1-T4-46** | **V1-T4-74** | **MBB150BTSCR** |
| 150 | None | OH/UG | 22 | 4 | None | CSR2150 | None | 3 | **V1-T4-43** | **V1-T4-70** | **CMBB150BTS** ⑥⑦ |
| 200 | None | OH/UG | 10 | 4 | None | CSR2200 | None | 13 | **V1-T4-46** | **V1-T4-74** | **MBB200BTSCR** |
| 200 | None | OH/UG | ② | 4 | None | Provision ④⑤ | None | 3 | **V1-T4-43** | **V1-T4-70** | **CMBP200BTS** ⑥⑦ |
| 200 | None | OH/UG | 22 | 4 | None | CSR2200 | None | 3 | — | **V1-T4-70** | **CMBB200BTS** ⑥⑦ |
| **Ringless Meter Mains (no distribution section included)** | | | | | | | | | | | |
| 150 | None | OH/UG | 10 | 4 | None | CSR2150 | None | 13 | **V1-T4-46** | **V1-T4-74** | **MBB150BTSC** ⑦ |
| 200 | None | OH/UG | 10 | 4 | None | CSR2200 | None | 9 | **V1-T4-47** | **V1-T4-74** | **MBB200BTS** ⑧ |
| 200 | None | OH/UG | 10 | 4 | None | CSR2200 | None | 13 | **V1-T4-46** | **V1-T4-74** | **MBB200BTSC** ⑦ |
| 150 | None | OH/UG | 10 | 4 | None | CSR2125 | None | 9 | **V1-T4-47** | **V1-T4-74** | **MBB150BTS** |
| 200 | None | OH/UG | ② | 4 | None | Provision ③ | None | 9 | **V1-T4-47** | **V1-T4-74** | **MBP200BTS** ⑦ |
| 200 | Horn | OH/UG | ② | 5 | None | Provision ③④ | None | 11 | **V1-T4-45** | **V1-T4-74** | **MBP200SD** |
| 200 | Horn | OH/UG | ② | 5 | None | Provision ③④ | None | 9 | **V1-T4-47** | **V1-T4-74** | **MBP200BTSD** |
| 100 | Horn | OH/UG | 10 | 5 | None | Provision | None | 15 | — | **V1-T4-74** | **CHMMB100BTS** |
| 150 | Horn | OH/UG | 10 | 5 | None | CSR2150 | None | 16 | — | **V1-T4-74** | **CHMMB150BTS** |
| 200 | Horn | OH/UG | 10 | 5 | None | CSR2200 | None | 16 | — | **V1-T4-74** | **CHMMB200BTS** |
| 150 | None | OH/UG | 10 | 4 | 4/8 | CSR | BR | — | — | — | **MB48B150TSG** |
| 200 | None | OH/UG | 10 | 4 | 4/8 | CSR | BR | — | — | — | **MB48B200BTSG** |
| 200 | Lever | OH/UG | 22 | 4 | 8/16 | CSR | BR | — | — | — | **MBX816B200BTS** |
| 200 | Lever | OH/UG | 22 | 4 | 20/40 | CSR | BR | — | — | — | **MBX2040B200BTS** |

***Notes***

① See **Page V1-T4-68** for box details.
② Per installed main breaker rating.
③ When a provision for main is provided, order one of the main breakers listed in **Page V1-T4-43**. Panels are dual labeled to accept Types BW, CSR or CSH Main Breakers.
④ MCBK225 lug kit is needed for load side cable connection for Meter Mains. Please order separately.
⑤ When a provision for main is provided, order one of the main breakers listed in this table. Panels are labeled to accept Type CSR Main Breakers.
⑥ Copper bus.
⑦ One-piece cover on utility side, Florida approved.
⑧ Single cover design.
⑨ Xcel approved.

**Note:** See knockout drawings on **Pages V1-T4-68 through V1-T4-74** for hub information.

## Combination Service Entrance Devices—Non-EUSERC, continued

| Ampere Rating | Bypass | Service | kAIC | Jaws | Distribution | Main | Branch Breaker Type | Dimensions and Enclosure Shape ① | Page Numbers Wiring | Page Numbers Knockout ① | Catalog Number |
|---|---|---|---|---|---|---|---|---|---|---|---|
| **Ring Style All-in-Ones (includes distribution section)** | | | | | | | | | | | |
| 125 | None | OH/UG | ② | 4 | 2/4 | None—refer to Distribution CSR2150 | CH | 2 | **V1-T4-43** | **V1-T4-70** | **CMB24L125BTS** ④⑤ |
| 150 | None | OH/UG | 22 | 4 | 8 | | CH | 3 | **V1-T4-44** | **V1-T4-70** | **CMB88B150BTS** ④⑤ |
| 200 | None | OH/UG | 10 | 4 | 4/8 | CSR2200 | BR | 3 | **V1-T4-44** | **V1-T4-70** | **MB48B200BTS** ⑤⑥ |
| 200 | None | OH/UG | 22 | 4 | 8 | CSR2200 | CH | 3 | **V1-T4-44** | **V1-T4-70** | **CMB88B200BTS** ④⑤⑥ |
| 200 | None | UG | 22 | 4 | 32/42 | CSR2200 | CH | 7 | **V1-T4-43** | **V1-T4-69** | **CMB3242B200BS** ④⑤ |
| 200 | None | OH/UG | 22 | — | 42/42 | — | CH | — | — | — | **CMB4242B200BTS** ④ |
| **Ringless All-in-Ones (includes distribution section)** | | | | | | | | | | | |
| 125 | None | OH/UG | 22 | 4 | 4/8 | CSR2125 | BR | 21 | — | **V1-T4-73** | **MBT48B125BTS** |
| 150 | None | OH/UG | 22 | 4 | 4/8 | CSR2150 | BR | 21 | **V1-T4-46** | **V1-T4-73** | **MBT48B150BTS** |
| 150 | Horn | OH/UG | 10 | 5 | 8/16 | BW2150 | BR | 11 | — | — | **MB816B150STD** ⑦ |
| 150 | Horn | OH/UG | 10 | 5 | 20/40 | BW2150 | BR | 11 | **V1-T4-47** | **V1-T4-74** | **MB2040B150SD** ⑦ |
| 200 | None | OH/UG | 10 | 4 | 8/16 | CSR2200 | BR | 10 | **V1-T4-46** | **V1-T4-74** | **MB816B200BTS** ⑤⑥ |
| 200 | None | OH/UG | 10 | 4 | 8/16 | CSR2200 | BR | 10 | **V1-T4-46** | **V1-T4-74** | **MB816B200BTSCU** ④⑤⑥ |
| 200 | Horn | OH/UG | 10 | 5 | 8/16 | BW2200 | BR | 11 | — | — | **MB816B200STD** ⑦ |
| 200 | None | OH/UG | ② | 4 | 8/16 | Provision ③ | BR | 10 | **V1-T4-46** | **V1-T4-74** | **MB816P200BTS** ⑤⑥ |
| 200 | None | OH/UG | ② | 4 | 8/16 | Provision ③ | BR | 10 | **V1-T4-46** | **V1-T4-74** | **MB816P200BTSCU** ④⑤⑥ |
| 200 | Horn | OH/UG | ② | 5 | 8/16 | Provision ③ | BR | 11 | **V1-T4-46** | **V1-T4-74** | **MB816P200STD** ⑥⑦ |
| 200 | Horn | OH/UG | ② | 5 | 8/16 | Provision ③ | BR | 10 | **V1-T4-46** | **V1-T4-74** | **MB816P200BTSD** ⑥ |
| 200 | None | OH/UG | 10 | 4 | 12/12 | CSR2200 | CH | 10 | **V1-T4-44** | **V1-T4-70** | **CMB1212B200BTS** ④⑤⑥ |
| 200 | None | OH/UG | ② | 4 | 6–2 Pole | Main lugs | CH | 9 | **V1-T4-45** | **V1-T4-71** | **CMB1212L200BTS** ④⑥ |
| 200 | None | OH/UG | ② | 4 | 12/12 | Provision ③ | CH | 10 | **V1-T4-45** | **V1-T4-71** | **CMB1212P200BTS** ④⑤⑥ |
| 200 | None | OH/UG | ② | 4 | 6–2 Pole | Main lugs | BR | 9 | **V1-T4-44** | **V1-T4-71** | **MB1212L200BTS** ⑥ |
| 200 | None | OH/UG | 22 | 4 | 24/24 | CSR2200 | CH | 10 | **V1-T4-44** | **V1-T4-74** | **CMB2424B200BTS** ④⑤ |
| 200 | None | OH/UG | 22 | 4 | 24/36 | CSR2200 | CH | 10 | **V1-T4-45** | **V1-T4-74** | **CMB2436B200BTS** ④ |
| 200 | None | OH/UG | 10 | 4 | 20/40 | CSR2200 | BR | 10 | **V1-T4-47** | **V1-T4-74** | **MB2040B200BTS** ④ |
| 200 | None | OH/UG | ② | 4 | 20/40 | Provision ③ | BR | 10 | **V1-T4-47** | **V1-T4-74** | **MB2040P200BTS** ⑤ |
| 200 | Horn | OH/UG | ② | 5 | 20/40 | Provision ③ | BR | 11 | **V1-T4-47** | **V1-T4-74** | **MB2040P200SD** ⑦ |
| 200 | Horn | OH/UG | 10 | 5 | 20/40 | CSR2200 | BR | 10 | **V1-T4-47** | **V1-T4-74** | **MB2040B200SD** ⑦ |
| 200 | Lever | OH/UG | 10 | 5 | None | CSR2200 | None | 14 | **V1-T4-45** | **V1-T4-73** | **CMBXB200BTS** ④ |
| 200 | Lever | OH/UG | 10 | 5 | 12/12 | CSR2200 | CH | 14 | **V1-T4-45** | **V1-T4-73** | **CMBX1212B200BTS** ④⑥ |
| 200 | Lever | OH/UG | 10 | 5 | 32/42 | CSR2200 | CH | 14 | **V1-T4-46** | **V1-T4-73** | **CMBX3242B200BTS** ④ |
| 200 | Lever | OH/UG | 10 | 5 | None | Provision | None | 14 | **V1-T4-45** | **V1-T4-73** | **CMBXP200BTS** ④ |
| 200 | Lever | OH/UG | 10 | 5 | 12/12 | Provision | CH | 14 | **V1-T4-45** | **V1-T4-73** | **CMBX1212P200BTS** ④⑥ |
| 200 | Lever | OH/UG | 10 | 5 | 32/42 | Provision | CH | 14 | **V1-T4-46** | **V1-T4-73** | **CMBX3242P200BTS** ④ |
| 200 | None | OH/UG | ② | 4 | 4/8 | Provision | BR | 21 | **V1-T4-46** | **V1-T4-73** | **MBT48P200BTS** ⑥ |
| 200 | None | OH/UG | 22 | 4 | 4/8 | CSR2200 | BR | 21 | **V1-T4-46** | **V1-T4-73** | **MBT48B200BTS** ⑥ |

***Notes***

① See **Page V1-T4-68** for box details.
② Per installed main breaker rating.
③ When a provision for main is provided, order one of the main breakers listed on **Page V1-T4-43**. All panels are dual labeled to accept Types BW, CSR, CSH Main Breakers.
④ Copper bus.
⑤ One-piece cover on utility side, Florida approved.
⑥ Units come with feed-through lugs.
⑦ Xcel approved.

## Main Breaker Selection Chart

| Maximum Ampere Rating | Two-Pole Breaker Catalog Numbers | | | |
|---|---|---|---|---|
| | 10 kAIC | 25 kAIC | 25 kAIC | 35 kAIC |
| 100 | **BW2100** | **CSR2100** | **CSR2100N** | **CSH2100N** |
| 125 | **BW2125** | **CSR2125** | **CSR2125N** | **CSH2125N** |
| 150 | **BW2150** | **CSR2150** | **CSR2150N** | **CSH2150N** |
| 200 | **BW2200** | **CSR2200** | **CSR2200N** | **CSH2200N** |
| Load Side Lug Kit for BW and CSR Breakers ① | | | **MCBK225** | |

## Wiring Diagrams

### Catalog Number—CMB3242B200BS

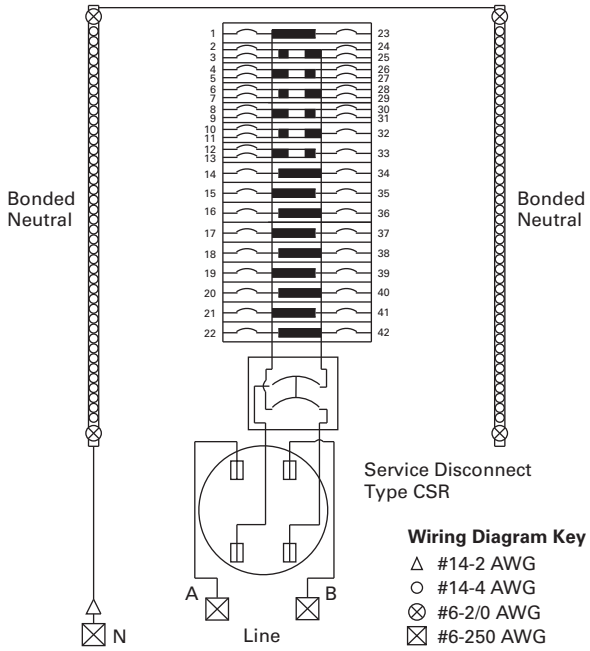


### Catalog Numbers—CMBP200BTS, CMBB150BTS

Install 200 Ampere Maximum Service Disconnect Type CSR ②

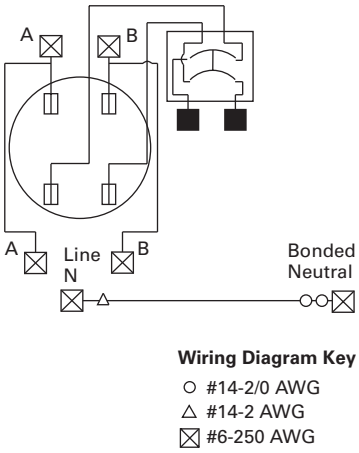


### Catalog Number—CMB24L125BTS

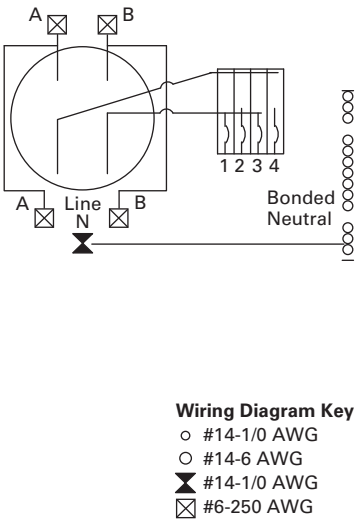


***Notes***

① When a provision for main is provided, order one of the main breakers listed in this table. All panels are dual labeled to accept Types BW, CSR and CSR Main Breakers.

② Factory-installed **MCBK225** Kit for C/B load lugs.

### Catalog Numbers—CMB88B200BTS, CMB88B150BTS

Service Disconnect
Type CSR 200 Ampere Maximum

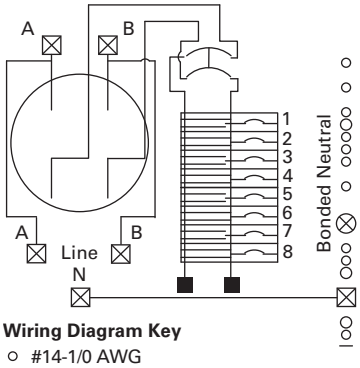


**Wiring Diagram Key**
- ○ #14-1/0 AWG
- ○ #14-6 AWG
- ⊗ #6-2/0 AWG
- ☒ #6-250 AWG
- ■ #4-300 AWG

### Catalog Number—MB1212L200BTS

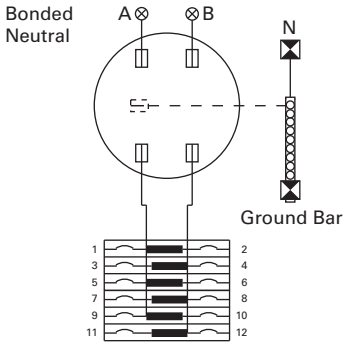


**Wiring Diagram Key**
- ○ #14-2/0 AWG
- ⊗ #6-350 kcmil
- ⧗ #6-300 kcmil

### Catalog Number—MB48B200BTS

200 A Maximum
Service Disconnect
Type BW or CSR

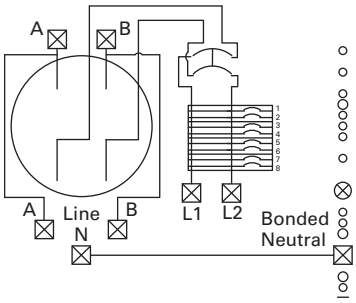


**Wiring Diagram Key**
- ○ #14-1/0 AWG
- ○ #14-6 AWG
- ⊗ #6-2/0 AWG
- ☒ #6-250 AWG

### Catalog Number—CMB2424B200BTS

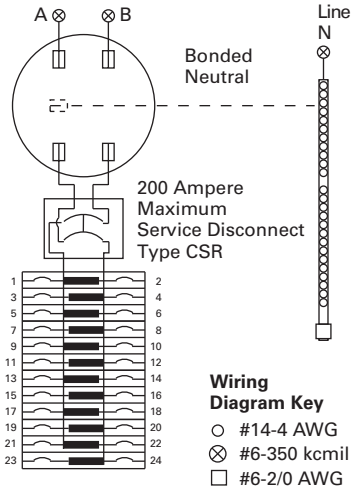


**Wiring Diagram Key**
- ○ #14-4 AWG
- ⊗ #6-350 kcmil
- □ #6-2/0 AWG
- ☒ #4-300 kcmil

### Catalog Number—CMB1212B200BTS

5th Jaw Factory Installed
on CMB1212B200BTSD and
CMB1212P200BTSD Only

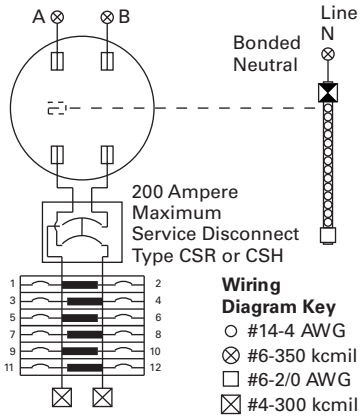


**Wiring Diagram Key**
- ○ #14-4 AWG
- ⊗ #6-350 kcmil
- □ #6-2/0 AWG
- ☒ #4-300 kcmil
- ⧗ #6-300 kcmil

### Catalog Number—CMB1212L200BTS

5th Jaw Factory Installed
on CMB1212L200BTSD Only

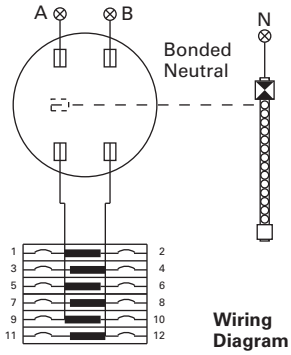


**Wiring Diagram Key**
- ○ #14-4 AWG
- ⊗ #6-350 kcmil
- □ #6-2/0 AWG
- ⧗ #6-300 kcmil

### Catalog Numbers—MBP200SD, CMBXB200BTS, CMBXP200BTS

CMBXB200BTS &
CMBXP200BTS
included lever by
pass meter socket

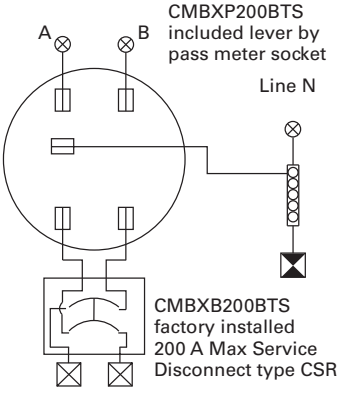


CMBXB200BTS
factory installed
200 A Max Service
Disconnect type CSR

MBP200SD
install 200 A Max
Service Disconnect
Type BW or CSR

Wiring
Diagram Key
- ○ #6-2/0 AWG
- ⊗ #6-350 kcmil
- ⊠ #1-300 kcmil
- ⧗ #6-300 kcmil

### Catalog Number—CMB2436B200BTS

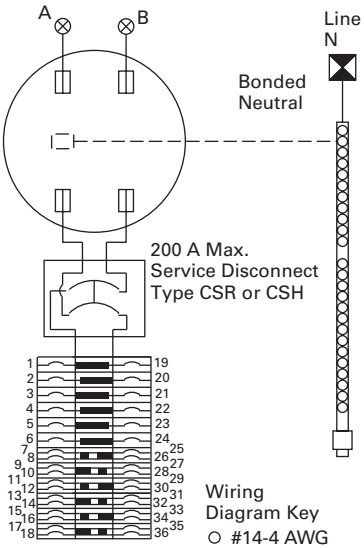


Wiring
Diagram Key
- ○ #14-4 AWG
- ⊗ #6-350 kcmil
- □ #6-2/0 AWG
- ⧗ #4-300 kcmil

Maximum of 12 twin
Breakers as Shown

### Catalog Numbers—CMB1212B150BTS, CMBX1212B200BTS, CMB1212B200BTS, CMB1212P200BTS, CMBX1212P200BTS

5th Jaw Factory Installed
on CMB1212B200BTSD and
CMB1212P200BTSD Only

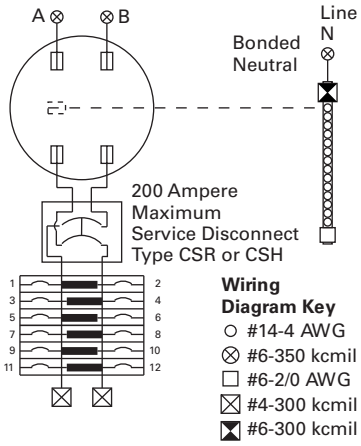


**Wiring Diagram Key**
- ○ #14-4 AWG
- ⊗ #6-350 kcmil
- □ #6-2/0 AWG
- ⊠ #4-300 kcmil
- ⧗ #6-300 kcmil

CMBX1212B200BTS &
CMBX1212P200BTS include
lever bypass meter socket

### Catalog Numbers—MBT48B200BTS, MBT48P200BTS, MBT48B150BTS, MBT48P150BTS

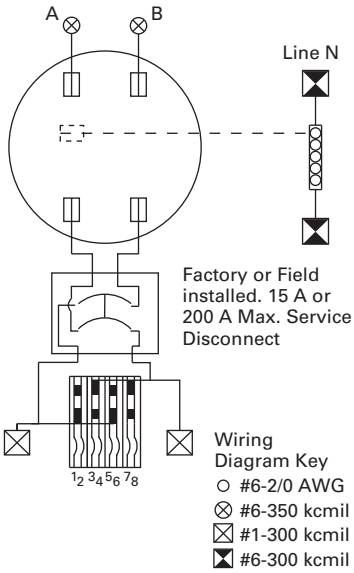


### Catalog Numbers—MBB150BTSC, MBB150BTSCR, MBB200BTSCR and MBB200BTSC

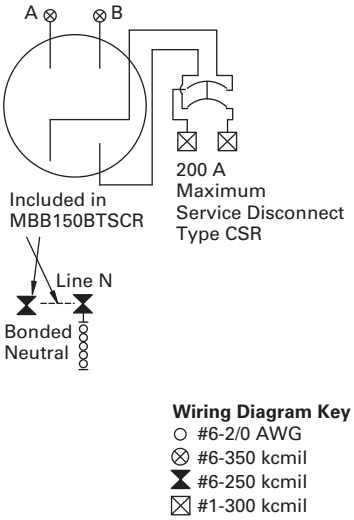


### Catalog Numbers—CMBX3242P200BTS, CMBX3242B200BTS

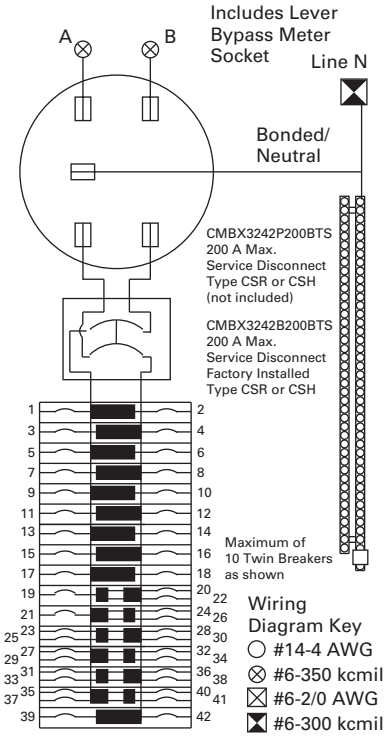


### Catalog Numbers—MB816P200STD, MB816B200BTS, MB816B200BTSCU, MB816P200BTS, MB816P200BTSCU and MB816P200BTSD

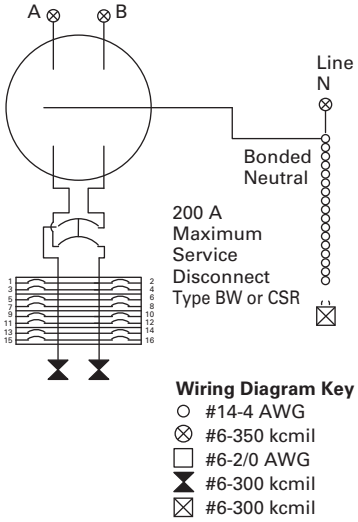

### Catalog Numbers—MBB150BTS, MBP200SD, MBB200BTS, MBP200BTS, MBP200BTSD, CMBXB200BTS and CMBXP200BTS

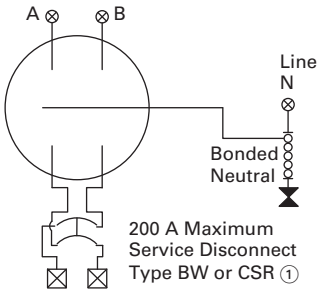


**Wiring Diagram Key**
- ○ #6-2/0 AWG
- ⊗ #6-350 kcmil
- ☒ #1-300 kcmil
- ⧗ #6-300 kcmil

### Catalog Numbers—MB2040P200SD, MB2040B200BTS, MB2040P200BTS, MB2040B150SD and MB2040B200SD

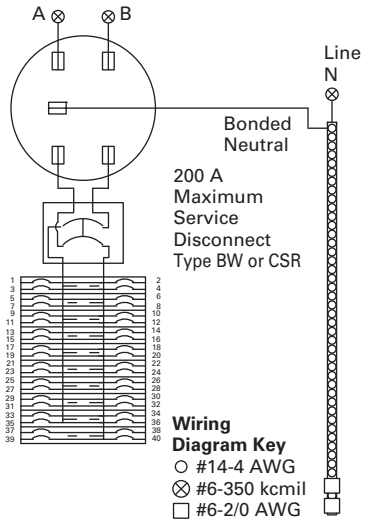

**Residential Meter Breakers**

*Meets EUSERC Requirements Service Entrance Devices 100–225 A*

## Contents


| *Description* | *Page* |
|---|---|
| Residential Meter Breakers | **V1-T4-37** |
| Non-EUSERC Combination Service Entrance Devices 100–200 A Styles | **V1-T4-39** |
| Meets EUSERC Requirements Service Entrance Devices 100–225 A | |
| West Coast All-In-One Design | **V1-T4-59** |
| Mechanical Interlock Cover | **V1-T4-65** |
| House Panels | **V1-T4-75** |
| Commercial Safety Sockets | **V1-T4-83** |
| CH Style Renovation Solutions | **V1-T4-86** |
| Aluminum Meter Breakers | **V1-T4-87** |


## Meets EUSERC Requirements Service Entrance Devices 100–225 A

### Product Description

Eaton is proud to introduce a new line of West Coast/EUSERC Meter Breaker units. The new EUSERC devices complement the existing standard meter breaker devices. Customers who are interested in the complete meter breaker line of products can refer to Technical Data TD.31F.01.T.E.

### Application Description

Eaton's line of EUSERC required devices adhere to the agreed upon standards. EUSERC utilities are predominately located in the western United States, but some eastern and midwestern utilities are also members. **These units can also be used in many Non-EUSERC areas.**

### Features, Benefits and Functions

- Single-phase, three-wire, 120/240 V, 10 kAIC
- Larger 250 kcmil lugs and additional knockouts for ease of installation
- Box type main lugs are included
- Factory-installed neutrals
- Hub provisions on top endwall. If hubs are required, order "DS" type hubs
- Ring type sockets are provided with a sealing ring
- Padlockable device covers provide an additional measure of security and help prevent tampering
- Most units have center keyhole for easy one-person installation
- NEMA 3R rainproof construction

## Catalog Number Selection

**MBE 20 40 B 200 B S ____**

**Meter Breaker Type**

| | |
|---|---|
| **MB** | = 1-inch (25.4 mm) BR Type |
| **MBE** | = 1-inch (25.4 mm) BR Type—EUSERC |
| **CMB** | = 0.75-inch (19.1 mm) CH Type |
| **CMBE** | = 0.75-inch (19.1 mm) CH Type—EUSERC |
| **MBED** | = 7-inch (177.8 mm) deep |
| **MBER** | = 1-inch (25.4 mm) BR Type—EUSERC ranch |
| **CMBER** | = 0.75-inch (19.1 mm) CH Type—EUSERC ranch |
| **MBEB** | = 1-inch (25.4 mm) BR Type back-to-back |
| **MBX** | = Xcel approved lever bypass meter breaker |

**Spacing**

Number of spaces

**Poles**

Maximum number of poles

**Main**

**B** = Main breaker included
**P** = Provision for main
**L** = Main lug

**Amperes**

Amperage of unit

**Breaker Feed**

**BT** = Bottom and top
**B** = Bottom only
**T** = Top only

**Mounting**

**S** = Surface
**F** = Flush/stucco

**Accessories/Modifications**

**D** = 5th jaw and horn bypass
**CU** = Copper
**C** = Single cover compact design
**CR** = Two cover compact design

**Last Digits**

**G** = Suffix = GA PWE spec
**R** ① = Suffix = ECCN renovation
**PV** = Suffix = PV rated units
**6** = 2 x 6 construction
**A** = Aluminum enclosure

***Note***

① Not available in CR.

## Product Selection

**Note:** See knockout drawings on **Pages V1-T4-68 through V1-T4-74** for hub information.

### Combination Service Entrance Devices—EUSERC

| Ampere Rating | By-pass | Service | kAIC | Jaws | Distribution | Main | Branch Breaker Type | Dimensions and Enclosure Shape ① | Page Numbers Wiring | Page Numbers Knockout ① | Catalog Number—Surface | Catalog Number—Flush |
|---|---|---|---|---|---|---|---|---|---|---|---|---|
| **Ring Style Meter Mains (no distribution section included)** | | | | | | | | | | | | |
| 125 | None | OH/UG | ② | 4 | 2/4 | MLO | BR | 2 | **V1-T4-55** | **V1-T4-70** | **MBE24L125BTS** ③ | **MBE24L125BTF** |
| 125 | None | OH/UG | ② | 4 | 2/4 | MLO | CH | 2 | **V1-T4-53** | **V1-T4-70** | **CMBE24L125BTS** ③④ | — |
| 150 | None | OH/UG | 22 | 4 | None | CSR2150N | None | 3 | **V1-T4-52** | **V1-T4-70** | **CMBEB150BTS** ③④ | — |
| 200 | None | OH/UG | 10 | 4 | None | CSR2200 | None | 3 | **V1-T4-56** | **V1-T4-70** | **MBEB200BTS** ③ | **MBEB200BTF** |
| 200 | None | OH/UG | 22 | 4 | None | CSR2200N | None | 3 | **V1-T4-52** | **V1-T4-70** | **CMBEB200BTS** ③④ | — |
| 200 | None | OH/UG | ② | 4 | 2/4 | MLO | BR | 3 | **V1-T4-56** | **V1-T4-70** | **MBE24L200BTS** ③ | **MBE24L200BTF** |
| 200 | None | OH/UG | ② | 4 | 2/4 | MLO | CH | 3 | **V1-T4-53** | **V1-T4-70** | **CMBE24L200BTS** ③④ | — |
| **Ring Style All-in-Ones (includes distribution section)** | | | | | | | | | | | | |
| 100 | None | OH/UG | 10 | 4 | 12/24 | BR2100 | BR | 2 | **V1-T4-53** | **V1-T4-70** | **MBE1224B100BTS** | **MBE1224B100BTF** |
| 100 | None | UG | 10 | 4 | 14/28 | BR2100 | BR | 4 | **V1-T4-55** | **V1-T4-69** | **MBE1428B100BS** ⑤ | **MBE1428B100BF** ⑤ |
| 100 | None | OH | 10 | 4 | 12/24 | BR2100 | BR | 9 | **V1-T4-58** | **V1-T4-71** | **MBE1224B100TS** | — |
| 125 | None | OH/UG | 10 | 4 | 12/24 | BR2125 | BR | 2 | **V1-T4-53** | **V1-T4-70** | **MBE1224B125BTS** | **MBE1224B125BTF** |
| 125 | None | OH | 10 | 4 | 12/24 | BR2125 | BR | 9 | **V1-T4-58** | **V1-T4-71** | **MBE1224B125TS** | — |
| 125 | None | UG | 10 | 4 | 18/36 | BR2125 | BR | 5 | **V1-T4-54** | **V1-T4-69** | — | **MBE1836B125BF** ⑤ |
| 150 | None | OH/UG | 10 | 4 | 4/8 | CSR2150 | BR | 19 | — | — | **MBER48B150BTS** ⑥⑦ | — |
| 150 | None | OH/UG | 22 | 4 | 8/8 | CSR2150N | CH | 19 | — | — | **CMBER88B150BTS** ④⑥⑦ | — |
| 150 | None | OH/UG | 22 | 4 | 8 | CSR2150N | CH | 3 | **V1-T4-53** | **V1-T4-70** | **CMBE88B150BTS** ④⑥ | **CMBE88B150BTF** ④⑥ |
| 150 | None | UG | 22 | 4 | 32/42 | CSR2150N | CH | 7 | **V1-T4-52** | **V1-T4-69** | **CMBE3242B150BS** ④⑤ | — |
| 150 | None | UG | 10 | 4 | 20/40 | CSR2150 | BR | 6 | **V1-T4-54** | **V1-T4-69** | — | **MBE2040B150BF** ⑤⑧ |

***Notes***

① See **Page V1-T4-68** for box details.
② Interrupting rating is dependent on the main breaker that is installed.
③ Reference drawing EUSERC DWG-301, G1.
④ Unit has copper bus.
⑤ Reference drawing EUSERC DWG-301/301A.
⑥ Units come with feed-through lugs.
⑦ Units include a two-pole provision for secondary main 70 A max. Type BR, BRH, BRHH.
⑧ Please use RH-Type hubs on top end wall for overhead feed.

**Note:** See knockout drawings on **Pages V1-T4-68 through V1-T4-74** for hub information.

## Combination Service Entrance Devices—EUSERC, continued

| Ampere Rating | By-pass | Service | kAIC | Jaws | Distribution | Main | Branch Breaker Type | Dimensions and Enclosure Shape ① | Page Numbers Wiring | Page Numbers Knockout ① | Catalog Number—Surface | Catalog Number—Flush |
|---|---|---|---|---|---|---|---|---|---|---|---|---|
| **Ring Style All-in-Ones (includes distribution section), continued** | | | | | | | | | | | | |
| 150 | None | OH/UG | 22 | 4 | 20/40 | CSR2150 | BR | — | **V1-T4-55** | — | **MBE2040B150BTS** ③ | — |
| 150 | None | OH/UG | 10 | 4 | 4/8 | CSR2150 | BR | 3 | **V1-T4-56** | **V1-T4-70** | **MBE48B150BTS** | — |
| 200 | None | OH/UG | 10 | 4 | 4/8 | CSR2200 | BR | 3 | **V1-T4-56** | **V1-T4-70** | **MBE48B200BTS** ④ | **MBE48B200BTF** ④ |
| 200 | None | OH/UG | 22 | 4 | 8 | CSR2200N | CH | 3 | **V1-T4-53** | **V1-T4-70** | **CMBE88B200BTS** ④⑤ | **CMBE88B200BTF** ④⑤ |
| 200 | None | OH/UG | 10 | 4 | 8 | CSR2200 | BR | 3 | **V1-T4-56** | **V1-T4-70** | **MBE88B200BTS** | — |
| 200 | None | OH/UG | 10 | 4 | 4/8 | CSR2200 | BR | 19 | **V1-T4-58** | **V1-T4-73** | **MBER48B200BTS** ④⑥ | — |
| 200 | None | OH/UG | 10 | 4 | 4/8 | CSR2200 | BR | 19 | **V1-T4-58** | **V1-T4-73** | **MBER48B200BTS** ④⑥ | — |
| 200 | None | OH/UG | ② | 4 | 8/16 | Provision | BR | 10 | **V1-T4-57** | **V1-T4-71** | **MBE816P200TSCU** ③⑤ | — |
| 200 | None | OH | ② | 4 | 8/16 | Provision | BR | 10 | **V1-T4-57** | **V1-T4-71** | **MBE816P200TS** ③④ | — |
| 200 | None | UG | ② | 4 | 6–2 Pole | Main Lug | CH | 5 | **V1-T4-52** | **V1-T4-69** | **CMBE1212L200BS** ⑤⑦ | **MBE1212L200BTF** ⑦ |
| 200 | None | OH/UG | ② | 4 | 6–2 Pole | Main Lug | BR | 9 | **V1-T4-57** | **V1-T4-69** | **MBE1212L200BTS** | — |
| 200 | None | OH | 10 | 4 | 20/40 | CSR2200 | BR | 10 | **V1-T4-57** | **V1-T4-71** | **MBE2040B200TS** ③ | **MBE2040B200TF** ⑧ |
| 200 | None | UG | 10 | 4 | 20/40 | CSR2200 | BR | 6 | **V1-T4-54** | **V1-T4-69** | **MBE2040B200BS** ③ | **MBE2040B200BF** ⑧ |
| 200 | None | OH/UG | 22 | 4 | 20/40 | CSR2200 | BR | — | **V1-T4-55** | — | **MBE2040BH200BTS** ③ | — |
| 200 | None | OH/UG | 22 | 4 | 20/40 | CSR2200 | BR | — | **V1-T4-55** | — | **MBE2040BH200BTF** ③ | — |
| 200 | None | UG | 22 | 4 | 30/42 | CSR2200 | BR | 7 | **V1-T4-54** | — | — | **MBE3042B200BF** |
| 200 | None | UG | 22 | 4 | 32/42 | CSR2200N | CH | 7 | **V1-T4-52** | **V1-T4-69** | **CMBE3242B200BS** ⑤⑦ | **CMBE3242B200BF** ⑤⑦ |
| 200 | None | UG | 22 | 4 | 40 | CSR2200 | BR | 12 | **V1-T4-58** | — | **MBE4040B200BSH** ③⑦ | — |
| 200 | None | OH/UG | 22 | 4 | 40 | CSR2200 | BR | 12 | **V1-T4-58** | — | **MBE4040B200BTS** | **MBE4040B200BTF** ⑨ |
| 200 | None | OH/UG | 22 | 4 | 42 | CSR2200N | CH | 12 | **V1-T4-57** | — | **CMBE4242B200BTS** ⑤ | — |
| 200 | None | OH/UG | 10 | 4 | 20/40 | CSR2200 | BR | 18 | **V1-T4-55** | **V1-T4-73** | **MBE2040B200BTS** ③ | **MBE2040B200BTF** ③ |
| 225 | None | OH/UG | 10 | 4 | 20/40 | CSR2225 | BR | 18 | **V1-T4-58** | **V1-T4-73** | **MBE2040B225BTS** ③ | **MBE2040B225BTF** ③ |
| 225 | None | UG | 22 | 4 | 30/42 | CSR2225 | BR | 7 | **V1-T4-55** | — | — | **MBE3042B225BF** ⑦ |
| 225 | None | UG | 22 | 4 | 32/42 | CSR2225N | CH | 7 | **V1-T4-52** | **V1-T4-69** | **CMBE3242B225BS** ⑤⑦ | **CMBE3242B225BF** ⑤⑦ |

***Notes***

① See **Page V1-T4-68** for box details.
② Interrupting rating is dependent on the main breaker that is installed.
③ Please use RH-Type hubs on top end wall for overhead feed.
④ Units come with feed-through lugs.
⑤ Unit has copper bus.
⑥ Semi-flush flange, not full stucco flange.
⑦ Reference drawing EUSERC DWG-301/301A.
⑧ When a provision for main is provided, order one of the main breakers listed on **Page V1-T4-68**. All panels are dual labeled to accept Types BW or CSR Main Breakers.
⑨ Includes factory-mounted 2.50-inch hub on bottom endwall. UG feed only.

## Wiring Diagrams

### Catalog Numbers—CMBE3242B150BS, CMBE3242B200BS, CMBE3242B200BF, CMBE3242B225BS and CMBE3242B225BF

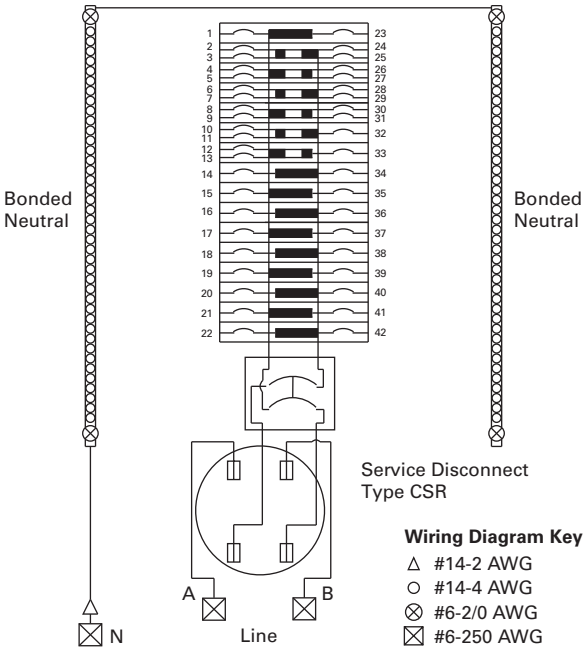


### Catalog Number—CMBE1212L200BS

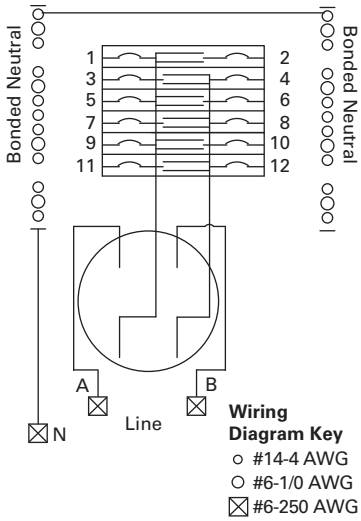


### Catalog Numbers—CMBE2222P125BF and CMBE2222P125BS

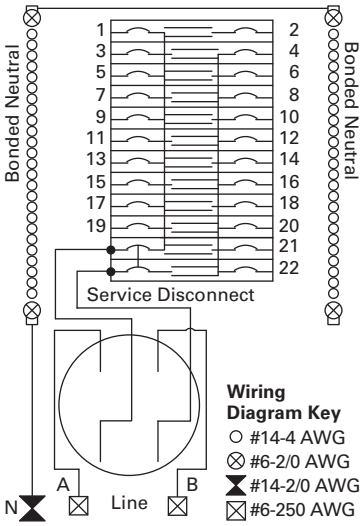


### Catalog Numbers—CMBEB150BTS and CMBEB200BTS

Install 200 Ampere Maximum Service Disconnect Type CSR ②

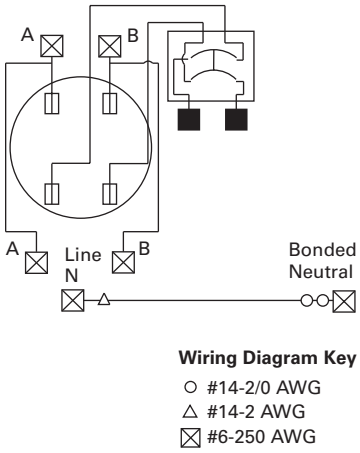


***Note***

① Factory-installed **MCBK225** kit for C/B load lugs.

### Catalog Number—CMBE24L125BTS

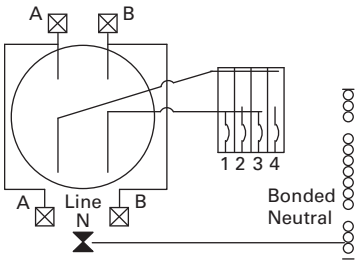


**Wiring Diagram Key**
- ○ #14-1/0 AWG
- ○ #14-6 AWG
- ⧗ #14-1/0 AWG
- ☒ #6-250 AWG

### Catalog Numbers—CMBE88B200BTS, CMBE88B200BTF, CMBE88B150BTS and CMBE88B150BTF

Service Disconnect
Type CSR 200 Ampere Maximum

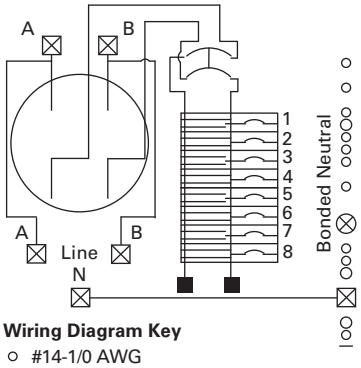


**Wiring Diagram Key**
- ○ #14-1/0 AWG
- ○ #14-6 AWG
- ⊗ #6-2/0 AWG
- ☒ #6-250 AWG
- ■ #4-300 AWG

### Catalog Number—CMBE24L200BTS

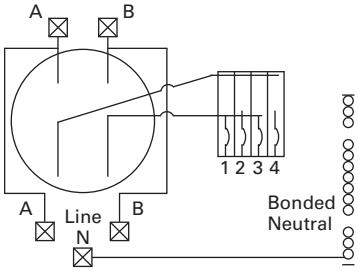


**Wiring Diagram Key**
- ○ #14-6 AWG
- ○ #14-1/0 AWG
- ☒ #6-250 AWG

### Catalog Numbers—MBE1224B100BTS, MBE1224B100BTF, MBE1224B125BTS and MBE1224B125BTF

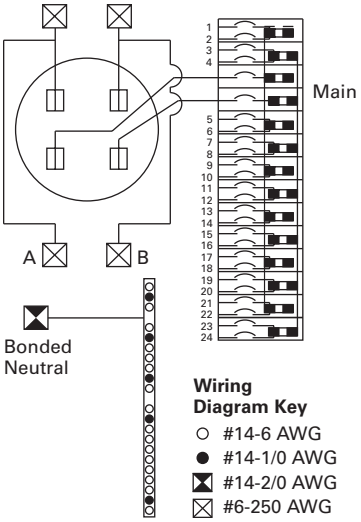


**Wiring Diagram Key**
- ○ #14-6 AWG
- ● #14-1/0 AWG
- ⧗ #14-2/0 AWG
- ☒ #6-250 AWG

### Catalog Numbers—MBE2040B150BF, MBE2040B200BS and MBE2040B200BF

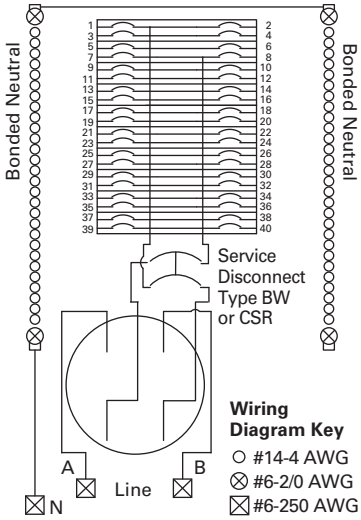


### Catalog Numbers—MBE1212L200BF and MBE1212L200BS

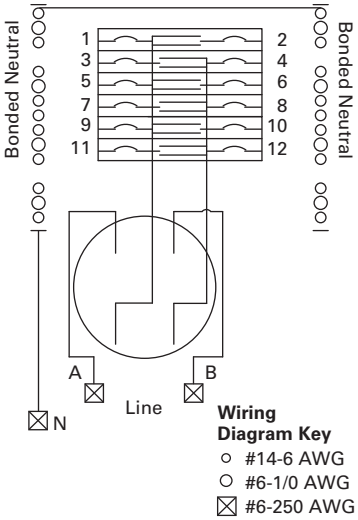


### Catalog Number—MBE1836B125BF

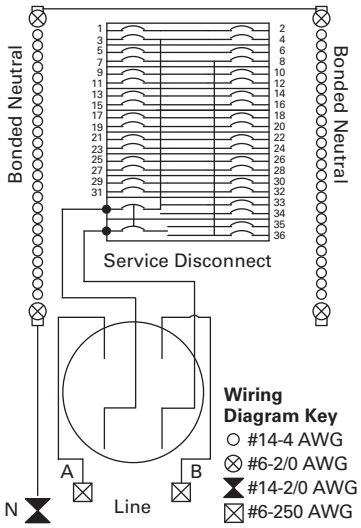


### Catalog Number—MBE3042B200BF

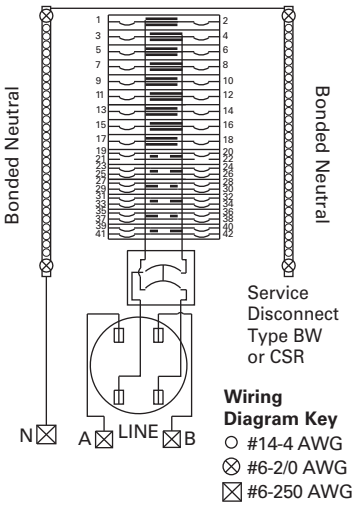

### Catalog Numbers—MBE1428B100BS and MBE1428B100BF

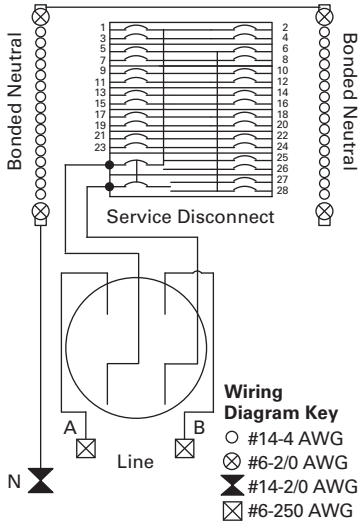


### Catalog Number—MBE3042B225BF

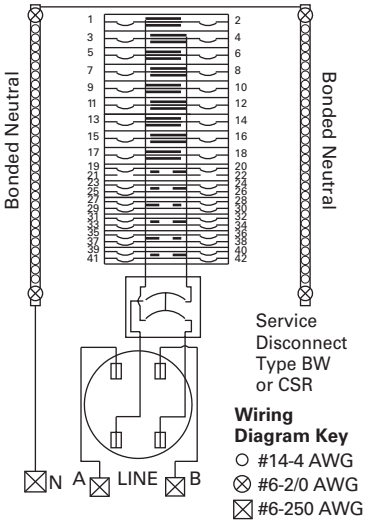


### Catalog Numbers—MBE2040B200BTS, MBE2040B150BTS, MBE2040BH200BTS and MBE2040BH200BTF

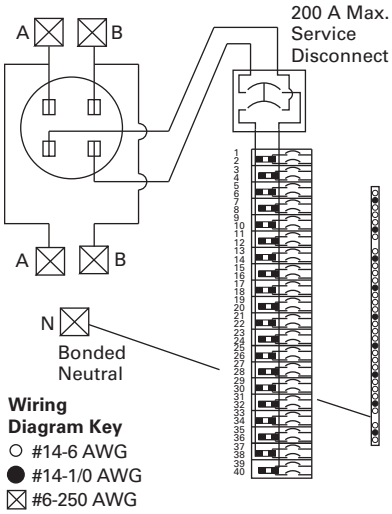


### Catalog Numbers—MBE24L125BTS and MBE24L125BTF

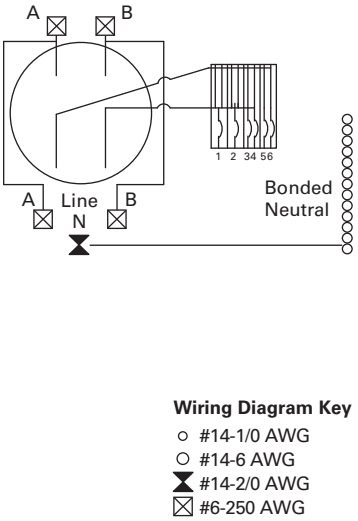

### Catalog Numbers—MBE48B150BTS, MBE48B200BTS, MBE48B200BTF

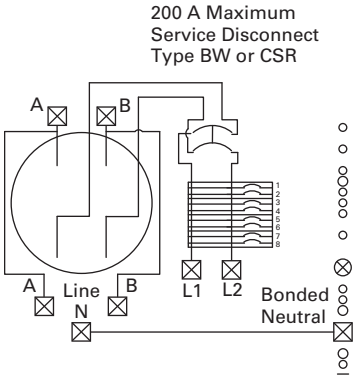


**Wiring Diagram Key**
- ○ #14-1/0 AWG
- ○ #14-6 AWG
- ⊗ #6-2/0 AWG
- ⊠ #6-250 AWG

### Catalog Numbers—MBE24L200BTS and MBE24L200BTF

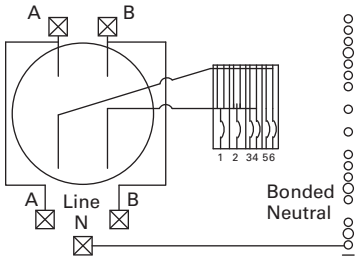


**Wiring Diagram Key**
- ○ #14-1/0 AWG
- ○ #14-6 AWG
- ⧗ #14-2/0 AWG
- ⊠ #6-250 AWG

### Catalog Numbers—MBEB200BTS and MBEB200BTF

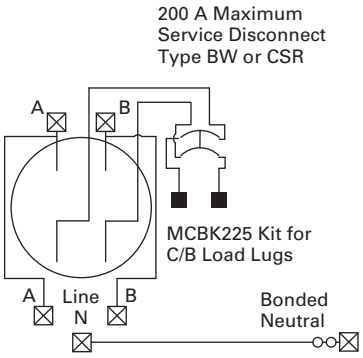


**Wiring Diagram Key**
- ○ #14-2/0 AWG
- ⊗ #6-2/0 AWG
- ⊠ #6-250 AWG

### Catalog Number—MBE88B200BTS

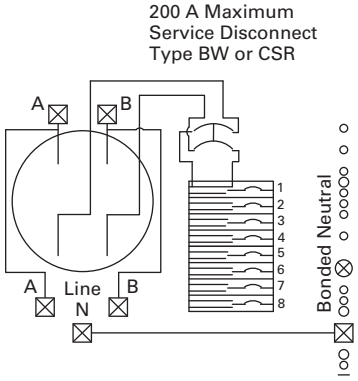


**Wiring Diagram Key**
- ○ #14-1/0 AWG
- ○ #14-6 AWG
- ⊗ #6-2/0 AWG
- ⊠ #6-250 AWG

### Catalog Numbers—MBE816P200TS and MBE816P200TSCU

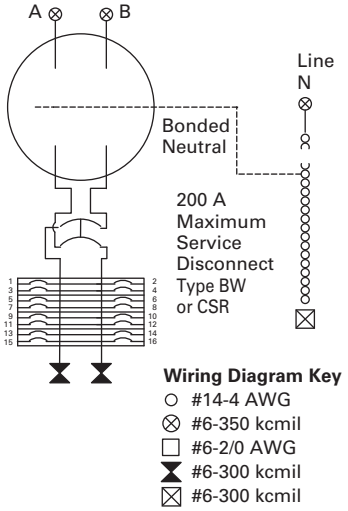


### Catalog Number—MBE1212L200BTS

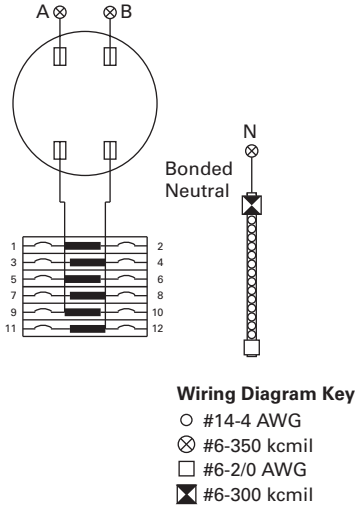


### Catalog Numbers— MBE2040B200TS and MBE2040B200TF

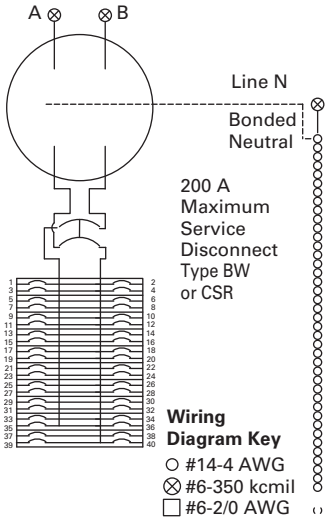


### Catalog Number—CMBE1212L200TS

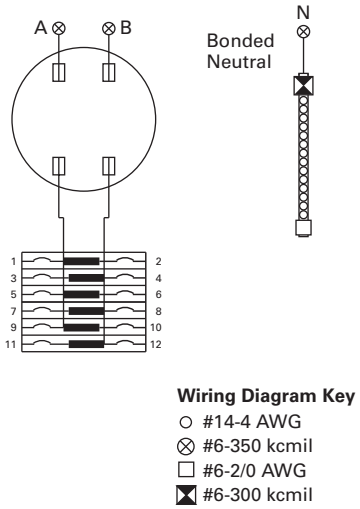


### Catalog Number—MBE1212L200BTS

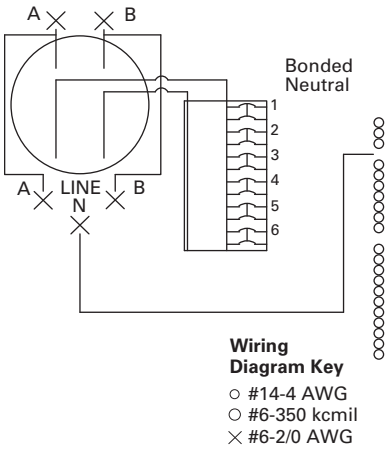


### Catalog Number—CMBE4242B200BTS

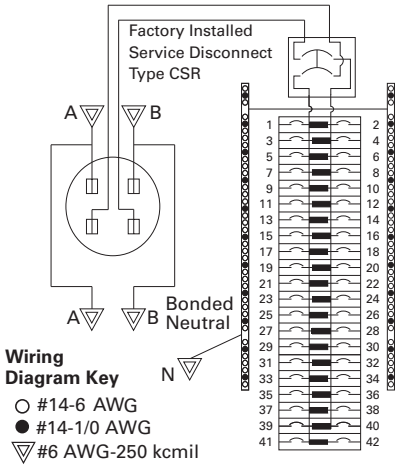

### Catalog Numbers—CMBER88B200BTS and CMBER88B200BTF

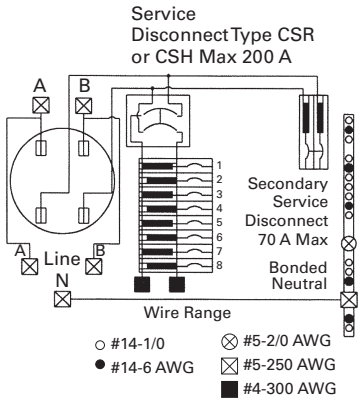


### Catalog Numbers—MBE2040B225BTS, MBE2040B225BTF

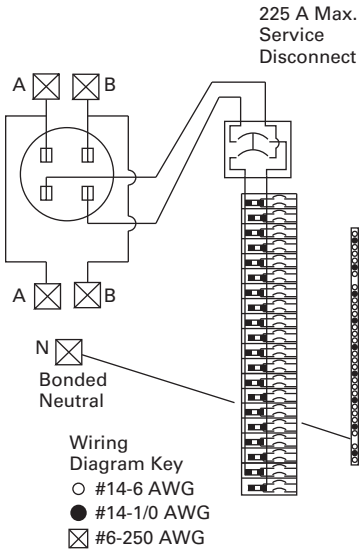


### Catalog Numbers—MBE4040B200BTS and MBE4040B200BSH

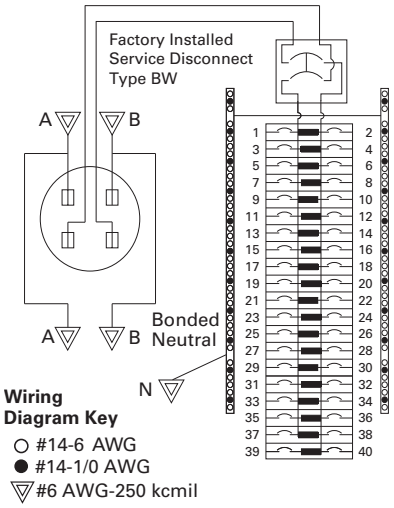


### Catalog Numbers—MBE1224B125TS and MBE1224B100TS

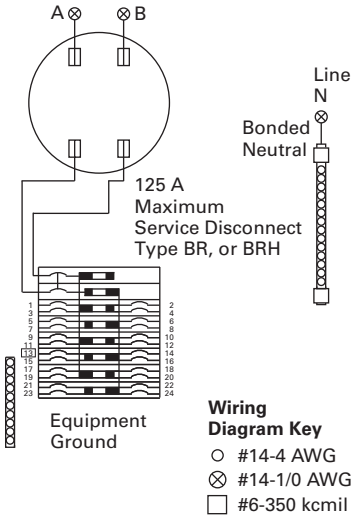


### Catalog Numbers—MBER48B200BTS and MER48B200BTF

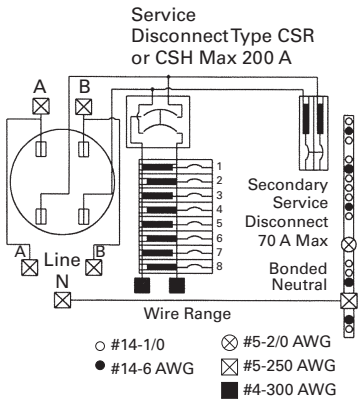

West Coast All-In-One Design

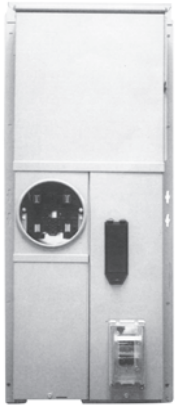

## Contents


| *Description* | *Page* |
|---|---|
| Residential Meter Breakers | **V1-T4-37** |
| Non-EUSERC Combination Service Entrance Devices 100–200 A Styles | **V1-T4-39** |
| Meets EUSERC Requirements Service Entrance Devices 100–225 A. | **V1-T4-48** |
| West Coast All-In-One Design | |
| Mechanical Interlock Cover | **V1-T4-65** |
| House Panels | **V1-T4-75** |
| Commercial Safety Sockets | **V1-T4-83** |
| CH Style Renovation Solutions | **V1-T4-86** |
| Aluminum Meter Breakers | **V1-T4-87** |




## West Coast All-In-One Design

### Product Description

A metering device that may contain a meter socket, main breaker and distribution section within the same enclosure.

### Features, Benefits and Functions

- Semi-flush mounting. 7-inch design ideal for stucco homes
- Endwall knockouts are easily accessible for future wiring without damaging stucco
- Knockout in back of case for mounting car-charging receptacle in garage (meets future electric car requirements)
- Outboard split neutral for easy wiring
- Commercial grade main breaker
- Value-added kits available: Hub adapter plate

## Product Selection

MBED3042B200BF

### 7-Inch Deep Meter Breaker—Standard Design OH/NG ①

| Ampere Rating | Bypass | Service | kAIC | Jaws | Distribution | Main | Branch Breaker Type | Catalog Number—Flush | Factory-Installed Kits |
|---|---|---|---|---|---|---|---|---|---|
| 100 | None | UG | 10 | 4 | 18/36 | BW2100 | BR | **MBED1836B100BF** | — |
| 125 | None | UG | 10 | 4 | 18/36 | BW2125 | BR | **MBED1836B125BF** | — |
| 200 | None | UG | 10 | 4 | 20/40 | BW2200 | BR | **MBED2040B200BF** | — |
| 200 ② | None | UG | 10 | 4 | 20/40 | BW2200 | BR | **MBED2040B200BFN** | — |
| 200 | None | UG | 10 | 4 | 30/42 | BW2200 | BR | **MBED3042B200BF** | — |
| 225 | None | UG | 10 | 4 | 20/40 | BW2225 | BR | **MBED2040B225BF** | — |
| 225 ② | None | UG | 10 | 4 | 20/40 | BW2225 | BR | **MBED2040B225BFN** | — |
| 225 | None | UG | 10 | 4 | 30/42 | BW2225 | BR | **MBED3042B225BF** | — |

## Accessories

### Hub Adapter Plate

| Description | Catalog Number |
|---|---|
| Hub adapter plate | **MBEDADPT** |

***Notes***

① Reference drawing EUSERC DWG-301A, G1

② Main Breaker Bus connected to 20/40 distribution. Main and Disconnect in same compartment.

## Wiring Diagrams

### Typical Wiring Diagram for Catalog Numbers MBED3042B200BF, MBED3042B225BF, MBED3042BH200BF

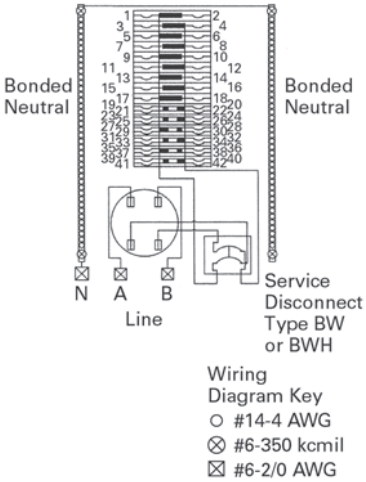


### Typical Wiring Diagram for Catalog Numbers MBED2040B200BFN, MBED2040B225BFN

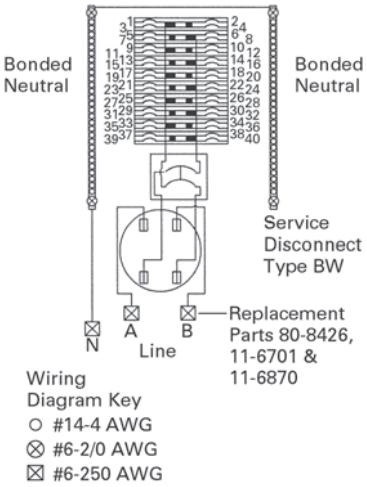


### Typical Wiring Diagram for Catalog Numbers MBED1836B100BF, MBED1836B125BF

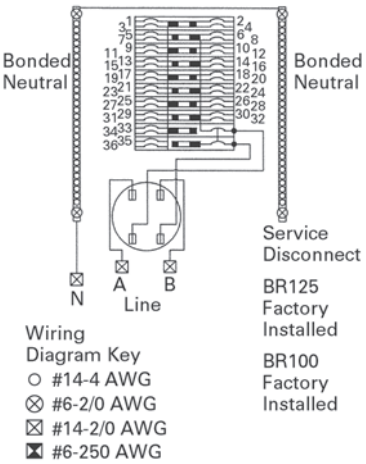


### Typical Wiring Diagram for Catalog Numbers MBED2040B200BF, MBED2040B225BF, MBED2040BH200BF, MBED2040BH225BF

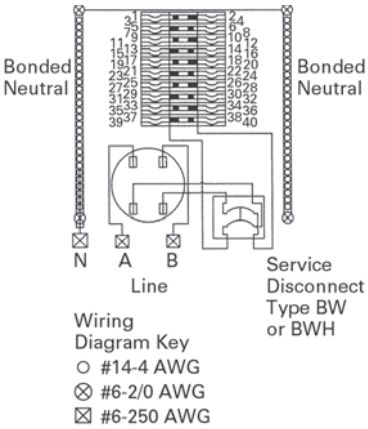

### Typical Wiring Diagram for Catalog Numbers MBEB2003040BB and MBEB2253040BB

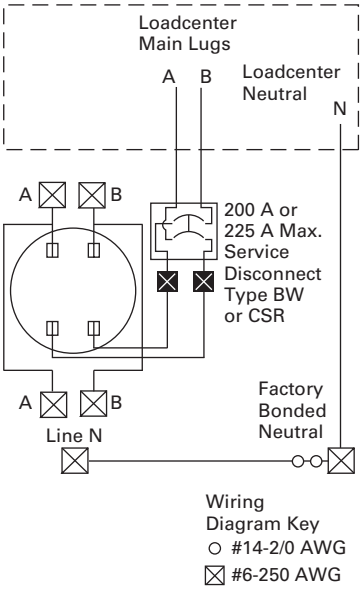


## Dimensions and Knockouts

Approximate Dimensions in Inches (mm)

### 7-Inch Deep Meter Breaker

| Catalog Number—Flush | Height | Width | Depth |
|---|---|---|---|
| **MBED1836B100BF** | 38.00 (965.2) | 14.19 (360.4) | 7.00 (177.8) |
| **MBED1836B125BF** | 38.00 (965.2) | 14.19 (360.4) | 7.00 (177.8) |
| **MBED2040B200BF** | 38.00 (965.2) | 14.19 (360.4) | 7.00 (177.8) |
| **MBED2040B200BFN** | 42.50 (1079.5) | 14.19 (360.4) | 7.00 (177.8) |
| **MBED3042B200BF** | 42.50 (1079.5) | 14.19 (360.4) | 7.00 (177.8) |
| **MBED2040B225BF** | 38.00 (965.2) | 14.19 (360.4) | 7.00 (177.8) |
| **MBED2040B225BFN** | 42.50 (1079.5) | 14.19 (360.4) | 7.00 (177.8) |
| **MBED3042B225BF** | 42.50 (1079.5) | 14.19 (360.4) | 7.00 (177.8) |

Approximate Dimensions in Inches (mm)

### Catalog Numbers MBED2040B200BFN, MBED20408225BFN, MBED3042B200BF, MBED3042B225BF, MBED2040B200BF, MBED2040B225BF, MBED1836B100BF, MBED1836B125BF

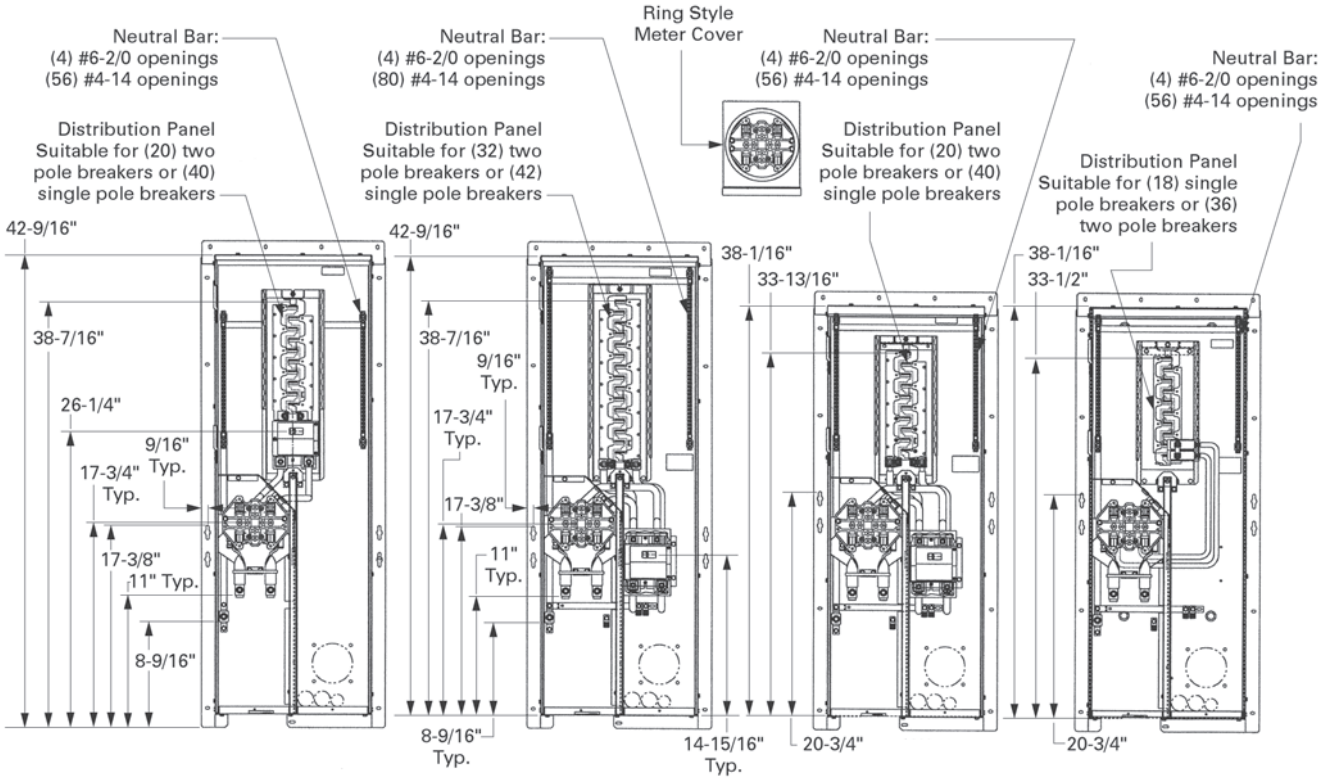


### Knockout Configurations and Dimensions for MBED2040B200BFN, MBED20408225BFN, MBED3042B200BF, MBED3042B225BF, MBED2040B200BF, MBED2040B225BF, MBED1836B100BF, MBED1836B125BF

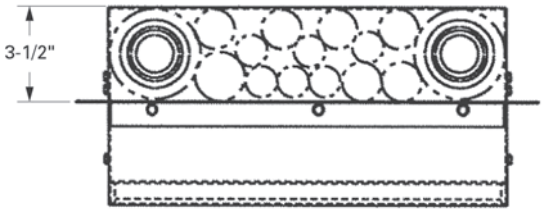


Top Endwall

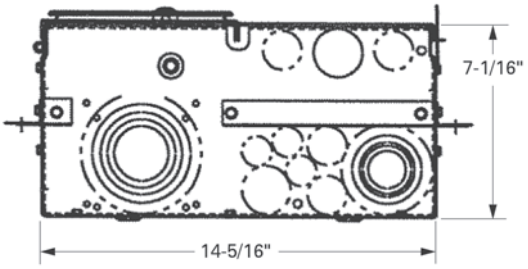


Bottom Endwall

Approximate Dimensions in Inches (mm)

### Catalog Numbers MBEB2003040BB, MBEB2253040BB

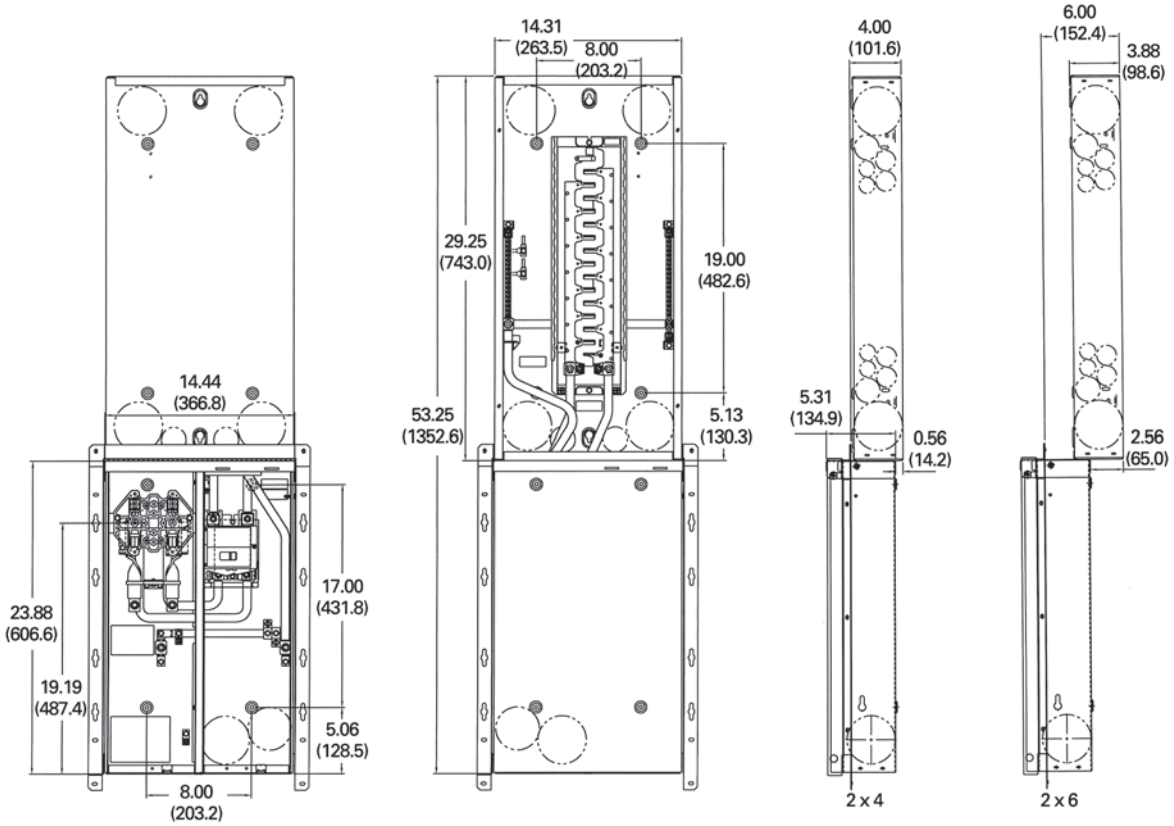


### Knockout Configurations for MBEB2003040BB, MBEB2253040BB

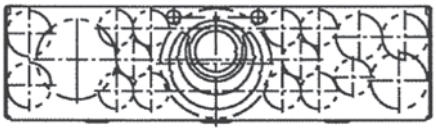

Top Endwall

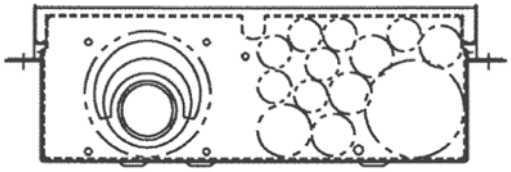

Bottom Endwall

Mechanical Interlock Cover

*Meter Breaker with Interlock Cover*

## Contents


| *Description* | *Page* |
|---|---|
| Residential Meter Breakers | **V1-T4-37** |
| Non-EUSERC Combination Service Entrance Devices 100–200 A Styles | **V1-T4-39** |
| Meets EUSERC Requirements Service Entrance Devices 100–225 A. | **V1-T4-48** |
| West Coast All-In-One Design | **V1-T4-59** |
| Mechanical Interlock Cover | |
| House Panels | **V1-T4-75** |
| Commercial Safety Sockets | **V1-T4-83** |
| CH Style Renovation Solutions | **V1-T4-86** |
| Aluminum Meter Breakers | **V1-T4-87** |




## Mechanical Interlock Cover

### Product Description

Covers mechanically interlock two breakers. Covers interlock main breaker with two-pole breaker mounted in the distribution section of the meter breakers.

## Product Selection

**Meter Breaker with Interlock Cover**

### Mechanical Interlock Cover

| Mechanical Interlock Deadfront | Meter Breaker Catalog Number |
|---|---|
| MBDF1M | **CMB1212B200BTS** |
| | **CMB1212B200BTSD** |
| | **CMB1212P200BTS** |
| | **CMB1212P200BTSD** |
| MBDF2M | **MB816B200BTS** |
| | **MB816B200BTSCU** |
| | **MB816P200BTS** |
| | **MB816P200BTSCU** |
| | **MB816P200STD** |
| MBDF3M | **MB2040B200BTS** |
| | **MB2040P200BTS** |
| | **MB2040P200SD** |
| MBDF4M | **MBE816P200TS** |
| | **MBE816P200TSCU** |
| MBDF5M | **MBE2040B150BF** |
| | **MBE2040B150BS** |
| | **MBE2040B200BF** |
| | **MBE2040B200BS** |
| MBDF6M | **MBE2040B200TF** |
| | **MBE2040B200TS** |
| | **MBE2040P200TF** |
| | **MBE2040P200TS** |
| MBDF7M | **CMBE3242B150BF** |
| | **CMBE3242B150BS** |
| | **CMBE3242B200BF** |
| | **CMBE3242B200BS** |
| | **CMB3242B150BS** |
| | **CMB3242B200BS** |
| MBDF8M | **CMBE4242B200BSH** |
| | **CMBE4242B200BTF** |
| | **CMBE4242B200BTS** |
| MBDF9M | **MBE4040B200BSH** |
| | **MBE4040B200BSHH** |
| | **MBE4040B200BTF** |
| | **MBE4040B200BTS** |

| Mechanical Interlock Deadfront | Meter Breaker Catalog Number |
|---|---|
| MBDF1AM | **CMB2424M200BTS** |
| MBDF10M | **CMB24B200TFR** |
| | **CMB24B200TSR** |
| MBDF11M | **CMBXB200BTS** |
| | **CMBXP200BTS** |
| MBDF12M | **CMBX3242B200BTS** |
| | **CMBX3242P200BTS** |
| MBDF13M | **MBE3042B200BF** |
| | **MBE3042B225BF** |
| MBDF14M | **CMBE88B150BTF** |
| | **CMBE88B150BTS** |
| | **CMBE88B200BTF** |
| | **CMBE88B200BTS** |
| | **CMB88B150BTS** |
| | **CMB88B200BTS** |
| MBDF15M | **MBE48B150BTF** |
| | **MBE48B150BTS** |
| | **MBE48B200BTF** |
| | **MBE48B200BTS** |
| MBDF16M | **MBE88B150BTF** |
| | **MBE88B150BTS** |
| | **MBE88B200BTF** |
| | **MBE88B200BTS** |
| MBDF17M | **MBE2040BC200BTS** |
| | **MBE2040BH200BTF** |
| | **MBE2040BH200BTS** |
| | **MBE2040B150BTF** |
| | **MBE2040B150BTS** |
| | **MBE2040B200BTF** |
| | **MBE2040B200BTS** |
| | **MBE2040B200BTSV** |
| | **MBE2040B225BTF** |
| | **MBE2040B225BTS** |

## Technical Data and Specifications

### Meter Breaker Parts ①

| Description | Catalog Number |
|---|---|
| **5th Jaw Kits** | |
| Compact and standard styles (MB and CMB) | **MB5JAWKIT** |
| EUSERC style | **IMM5JKOP** ② |
| **Horn Bypass Kits** | |
| Ringless Style units only (MB and CMB) | **MBHBPKIT** |

### Hub Selection Chart

| Hub Size Dimensions in Inches (mm) | Catalog Number |
|---|---|
| 1.00 (25.4) | **DS100H2** |
| 1.25 (31.8) | **DS125H2** |
| 1.50 (38.1) | **DS150H2** |
| 2.00 (50.8) | **DS200H2** |
| 2.50 (63.5) | **DS250H2** |
| 3.00 (76.2) | **DS300H2** |

### Top Endwall (Surface)

| Hub Provision Catalog Number | |
|---|---|
| **DS100H2** | |
| **DS125H2** | |
| **DS150H2** | |
| **DS200H2** | |
| **DS250H2** | |
| **DS300H2** | |
| **DS900AP** | (Adapter Plate if using DS___H1 hubs only) ③ |

### Wire Size Chart

| Main | Wire Size Range Cu/Al 60 °C or 75 °C for Line Terminals |
|---|---|
| BR250 | #14–4 kcmil |
| BR260 | #4–1/0 kcmil |
| BR270 | #4–1/0 kcmil |
| BR280 | #4–1/0 kcmil |
| BR290 | #4–1/0 kcmil |
| BR2100 | #4–1/0 kcmil |
| BW2125 | #2–300 kcmil |
| BW2150 | #2–300 kcmil |
| BW2200 | #2–300 kcmil |
| CSR2125 | #2–300 kcmil |
| CSR2150 | #2–300 kcmil |
| CSR2200 | #2–300 kcmil |
| CSR2125N | #1/0–250 kcmil |
| CSR2150N | #1/0–250 kcmil |
| CSR2200N | #1/0–250 kcmil |
| 125 A main lugs | — |
| 200 A main lugs | — |
| MCBK225 | #2–300 kcmil |

### Wire Size is Determined by the Circuit Breaker Installed in the Enclosure

| Wire/Application | Maximum Wire Size | Ampere Rating |
|---|---|---|
| Aluminum—Standard | 250 kcmil | 200 |
| Aluminum—Service Entrance | 250 kcmil | 225 |
| Copper—Standard and Service Entrance | 250 kcmil | 225 |

***Notes***

① For breakers under 70 A used in backfed applications, add "B" to the end of the catalog string to get the appropriate "hold-down" version.

② Reference drawing EUSERC DWG-G1.

③ Use when DS H1 Type 1, 1.25 and 1.50-inch hubs are needed.

Use DS...H2 hubs for bottom endwalls (for all units). Use RH hubs for top endwalls on semi-flush units. Use DS...H2 hubs for top endwalls on surface devices.

## Dimensions and Knockouts

Approximate Dimensions in Inches (mm)

### Box Styles—Five Different Styles (Shapes) of Product

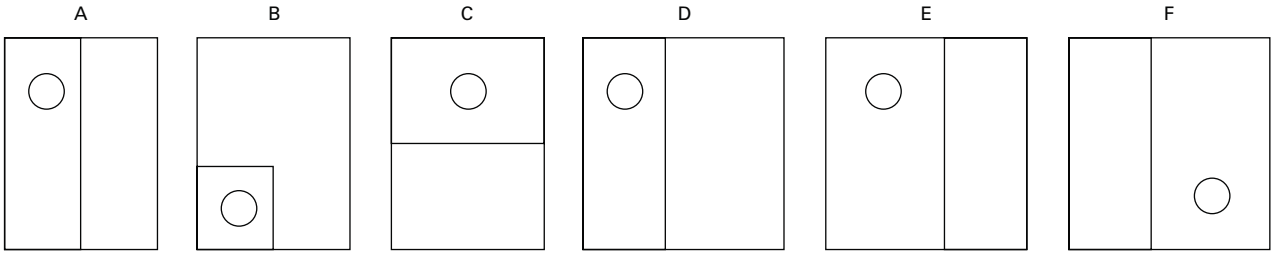


### Box Dimensions

| Box Number | Height | Width | Depth | Box Style |
|---|---|---|---|---|
| 1 | 12.50 (317.5) | 14.44 (366.7) | 4.00 (101.6) | A |
| 2 | 23.88 (606.4) | 14.44 (366.7) | 5.38 (136.5) | A |
| 3 | 28.38 (720.7) | 14.44 (366.7) | 5.38 (136.5) | A |
| 4 | 34.13 (866.8) | 14.44 (366.7) | 5.38 (136.5) | B |
| 5 | 36.13 (917.6) | 14.44 (366.7) | 5.38 (136.5) | B |
| 6 | 43.38 (1101.7) | 14.44 (366.7) | 5.38 (136.5) | B |
| 7 | 46.88 (1190.6) | 14.44 (366.7) | 5.38 (136.5) | B |
| 8 | 19.75 (501.7) | 7.50 (190.5) | 4.00 (101.6) | C |
| 9 | 25.00 (635.0) | 14.44 (366.7) | 5.38 (136.5) | C |
| 10 | 32.38 (822.3) | 14.44 (366.7) | 5.38 (136.5) | C |
| 11 | 36.63 (930.3) | 14.44 (366.7) | 5.38 (136.5) | C |
| 12 | 34.38 (873.1) | 22.00 (558.8) | 5.38 (136.5) | D |
| 13 | 19.75 (501.7) | 14.44 (366.7) | 5.38 (136.5) | E |
| 14 | 39.91 (1013.7) | 14.44 (366.7) | 5.38 (136.5) | C |
| 15 | 23.88 (606.6) | 13.00 (330.2) | 4.94 (125.5) | F |
| 16 | 28.38 (720.9) | 13.00 (330.2) | 4.94 (125.5) | F |
| 17 | 34.19 (868.4) | 22.13 (562.1) | 5.00 (127.0) | D |
| 18 | 36.06 (915.9) | 16.63 (422.4) | 5.50 (139.7) | A |
| 19 | 28.38 (720.9) | 14.44 (366.8) | 4.94 (125.5) | A |
| 20 | 32.06 (814.3) | 14.44 (366.8) | 4.94 (125.5) | C |
| 21 | 25.50 (647.7) | 14.44 (366.8) | 4.94 (125.5) | C |

Approximate Dimensions in Inches (mm)

### Knockouts for Stucco and Surface Units Catalog Numbers—CMBE3242B200BF, CMBE3242B225BF, MBE2040B200BF, MBE2040B150BF, MBE1428B100BF, MBE1212L200BTF, MBE1836B125BF and MBE1212L200BTS

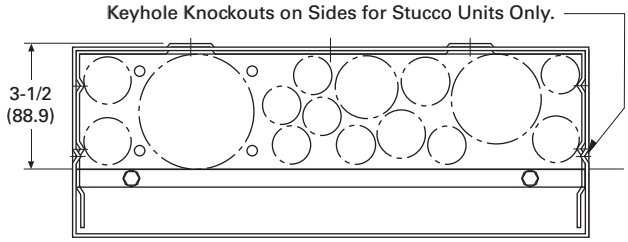


Top Stucco

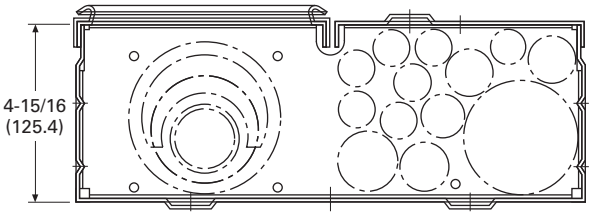


Bottom

### Knockouts for Stucco and Surface Units Catalog Numbers—CMBE3242B150BS, CMBE3242B200BS, CMBE3242B225BS, CMBE1212L200BS, MBE2040B200BS, MBE1428B100BS, MBE1212L200BTS, CMB3242B150BS and CMB3242B200BS

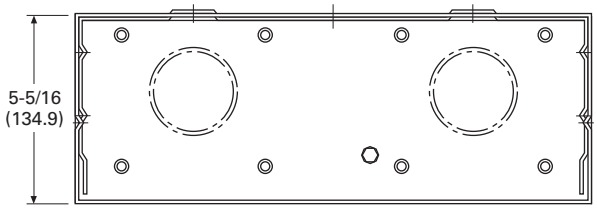


Top Surface

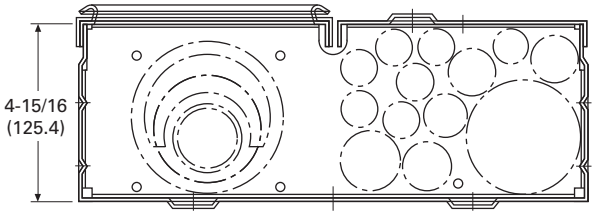


Bottom

### Top Endwall (Surface)

| Hub Provision Catalog Number | Quantity |
|---|---|
| **DS100H2** | ① |
| **DS125H2** | ① |
| **DS150H2** | ① |
| **DS200H2** | ① |
| **DS250H2** | ① |
| **DS300H2** | ① |
| **DS900AP** (Adapter Plate if using DS___H1 hubs only) ② | ① |

### Top Endwall (Stucco) ③

| Knockout Size Dimensions in Inches (mm) | Quantity |
|---|---|
| 1.25, 1.50, 2.00, 2.50 (31.8, 38.1, 50.8, 63.5) | 1 |
| 1.00, 1.25, 1.50 (25.4, 31.8, 38.1) | 1 |
| 0.50, 0.75, 1.00 (12.7, 19.1, 25.4) | 1 |
| 0.50, 0.75 (12.7, 19.1) | 3 |
| 0.50 (12.7) | 3 |

### Bottom Endwall

| Knockout Size Dimensions in Inches (mm) | Quantity |
|---|---|
| 0.50 (12.7) | 7 |
| 0.50, 0.75 (12.7, 19.1) | 4 |
| 0.50, 0.75, 1.00 (12.7, 19.1, 25.4) | 1 |
| 1.00, 1.25, 1.50, 2.00 (25.4, 31.8, 38.1, 50.8) | 1 |
| 1.25, 1.50, 2.00, 2.50, 3.00 (31.8, 38.1, 50.8, 63.5, 76.2) | 1 |

***Notes***

① For details regarding quantities, please contact the Technical Resource Center (TRC) at 1-877-ETN-CARE.

② Use when DS H1 Type 1, 1.25 and 1.50-inch hubs are needed.

③ RH hubs are to be used for Top Endwall (Stucco) endwalls.

Approximate Dimensions in Inches (mm)

### Knockouts for Stucco and Surface Units Catalog Numbers—CMBE88B150BTF, CMBE88B200BTF, MBE24L125BTF, MBE24L200BTF, MBE48B200BTF, MBEB200BTF, MBE1224B100BTF and MBE1224B125BTF

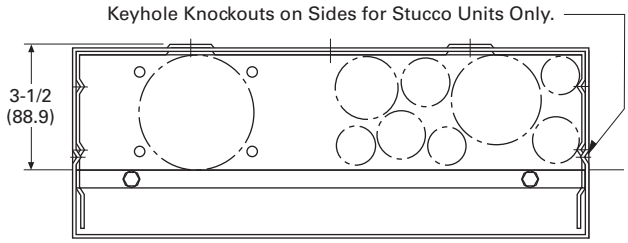


Top Stucco

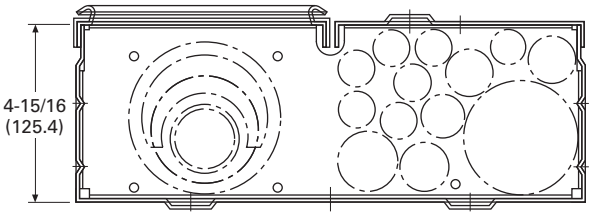


Bottom

### Knockouts for Stucco and Surface Units Catalog Numbers—CMBB150BTS, CMBB200BTS, CMBP200BTS, CMBE24L125BTS, CMB24L125BTS, CMBE24L200BTS, CMBEB200BTS, CMBEB150BTS, CMBE88B150BTS, CMBP200BTS, CMBE88B200BTS, MBE24L125BTS, MBE24L200BTS, MBE48B150BTS, MBE48B200BTS, MBE88B200BTS, MBEB200BTS, MBE1224B100BTS, MBE1224B125BTS, CMB88B150BTS, CMB88B200BTS and MB48B200BTS

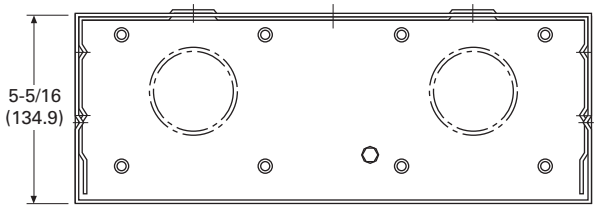


Top Surface

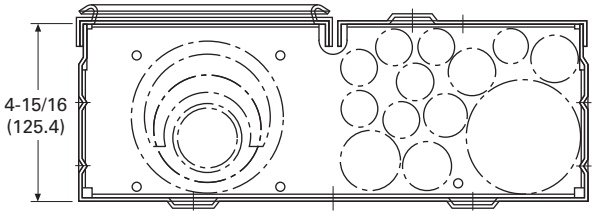


Bottom

### Top Endwall (Surface)

| Hub Provision Catalog Number | Quantity |
|---|---|
| **DS100H2** | ① |
| **DS125H2** | ① |
| **DS150H2** | ① |
| **DS200H2** | ① |
| **DS250H2** | ① |
| **DS300H2** | ① |
| **DS900AP** (Adapter Plate if using DS___H1 hubs only) ② | ① |

### Top Endwall (Stucco) ③

| Knockout Size Dimensions in Inches (mm) | Quantity |
|---|---|
| 1.25, 1.50, 2.00, 2.50 (31.8, 38.1, 50.8, 63.5) | 1 |
| 1.00, 1.25, 1.50 (25.4, 31.8, 38.1) | 1 |
| 0.50, 0.75, 1.00 (12.7, 19.1, 25.4) | 1 |
| 0.50, 0.75 (12.7, 19.1) | 3 |
| 0.50 (12.7) | 3 |

### Bottom Endwall

| Knockout Size Dimensions in Inches (mm) | Quantity |
|---|---|
| 0.50 (12.7) | 7 |
| 0.50, 0.75 (12.7, 19.1) | 4 |
| 0.50, 0.75, 1.00 (12.7, 19.1, 25.4) | 1 |
| 1.00, 1.25, 1.50, 2.00 (25.4, 31.8, 38.1, 50.8) | 1 |
| 1.25, 1.50, 2.00, 2.50, 3.00 (31.8, 38.1, 50.8, 63.5, 76.2) | 1 |

***Notes***

① For details regarding quantities, please contact the Technical Resource Center (TRC) at 1-877-ETN-CARE.

② Use when DS H1 Type 1, 1.25 and 1.50-inch hubs are needed.

③ RH hubs are to be used for Top Endwall (Stucco) endwalls.

Approximate Dimensions in Inches (mm)

### Knockouts for Stucco and Surface Units Catalog Number—MMBE2040B200TF

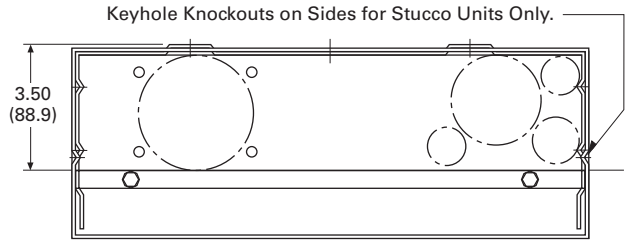


Top Stucco

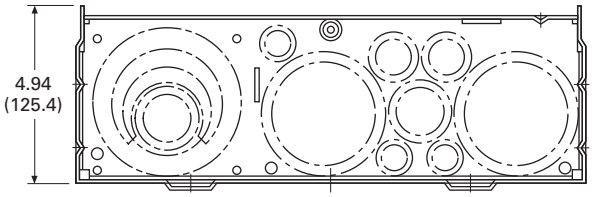


Bottom

### Knockouts for Stucco and Surface Units Catalog Numbers—MBE1224B100TS, MBE1224B125TS, MBE816P200TS, MBE816P200TSCU, MBE2040B200TS, CMB1212P200BTS, CMB1212P200BTSD, CMB1212B200BTS, MB1212L200BTS and CMB1212L200BTS

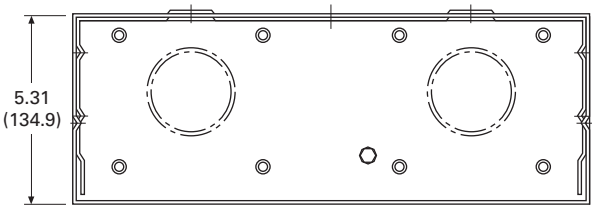


Top Surface

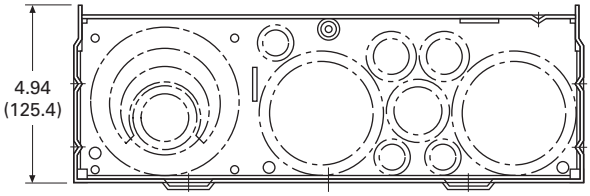


Bottom

### Top Endwall (Surface)

| Hub Provision Catalog Number | Quantity |
|---|---|
| **DS100H2** | ① |
| **DS125H2** | ① |
| **DS150H2** | ① |
| **DS200H2** | ① |
| **DS250H2** | ① |
| **DS300H2** | ① |
| **DS900AP** (Adapter Plate) ② | ① |

### Top Endwall (Stucco) ③

| Knockout Size Dimensions in Inches (mm) | Quantity |
|---|---|
| 1.25, 1.50, 2.00, 2.50 (31.8, 38.1, 50.8, 63.5) | 1 |
| 1.00, 1.25, 1.50 (25.4, 31.8, 38.1) | 1 |
| 0.50, 0.75, 1.00 (12.7, 19.1, 25.4) | 1 |
| 0.50, 0.75 (12.7, 19.1) | 3 |
| 0.50 (12.7) | 3 |

### Bottom Endwall

| Knockout Size Dimensions in Inches (mm) | Quantity |
|---|---|
| 0.50 (12.7) | 7 |
| 0.50, 0.75 (12.7, 19.1) | 4 |
| 0.50, 0.75, 1.00 (12.7, 19.1, 25.4) | 1 |
| 1.00, 1.25, 1.50, 2.00 (25.4, 31.8, 38.1, 50.8) | 1 |
| 1.25, 1.50, 2.00, 2.50, 3.00 (31.8, 38.1, 50.8, 63.5, 76.2) | 1 |

***Notes***

① For details regarding quantities, please contact the Technical Resource Center (TRC) at 1-877-ETN-CARE.

② Use when DS H1 Type 1, 1.25 and 1.50-inch hubs are needed.

③ RH hubs are to be used for Top Endwall (Stucco) endwalls.

Approximate Dimensions in Inches (mm)

## Knockouts for Stucco and Surface Units

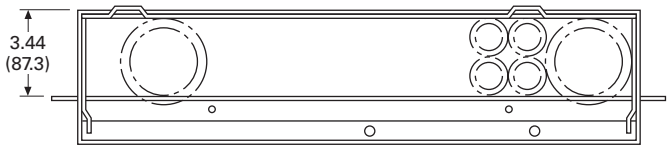


Top Flush

**MBE4040B200BTF**

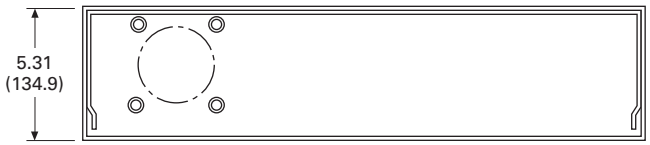


Top Surface

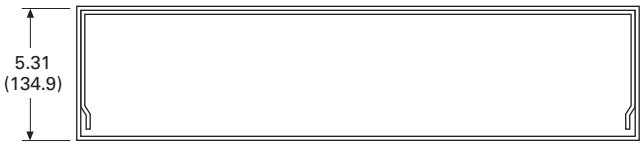


Top Surface

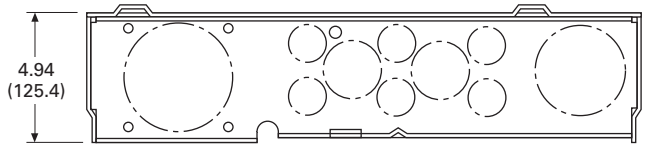


Bottom

**CMBE4242B200BTS**
**MBE4040B200BTS**

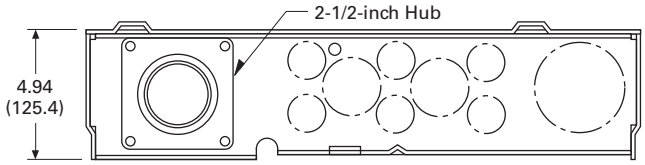


Bottom

**MBE4040B200BSH**

## Top Endwall (Surface)

| Hub Provision Catalog Number | Quantity |
|---|---|
| **DS100H2** | ① |
| **DS125H2** | ① |
| **DS150H2** | ① |
| **DS200H2** | ① |
| **DS250H2** | ① |
| **DS300H2** | ① |
| **DS900AP** (Adapter Plate) ② | ① |

## Top Endwall (Stucco) ③

| Knockout Size Dimensions in Inches (mm) | Quantity |
|---|---|
| 1.25, 1.50, 2.00, 2.50 (31.8, 38.1, 50.8, 63.5) | 2 |
| 0.50, 0.75 (12.7, 19.1) | 3 |

## Bottom Endwall

| Knockout Size Dimensions in Inches (mm) | Quantity |
|---|---|
| 0.50, 0.75 (12.7, 19.1) | 6 |
| 0.50, 0.75, 1, 1.25 (12.7, 19.1, 25.4, 31.8) | 2 |
| 1.00, 1.25, 1.50, 2.00, 2.50 (25.4, 31.8, 38.1, 50.8, 63.5) | 1 |
| 1.00, 1.25, 1.50, 2.00, 2.50, 3.00 (25.4, 31.8, 38.1, 50.8, 63.5, 76.2) | 1 |

***Notes***

① For details regarding quantities, please contact the Technical Resource Center (TRC) at 1-877-ETN-CARE.
② Use when DS H1 Type 1, 1.25 and 1.50-inch hubs are needed.
③ RH hubs are to be used for Top Endwall (Stucco) endwalls.

Approximate Dimensions in Inches (mm)

### Knockout Configurations and Dimensions for Catalog Numbers MBER48B200BTS and CMBER88B200BTS

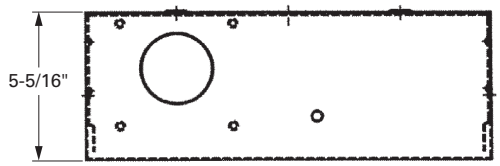


**Top Surface**

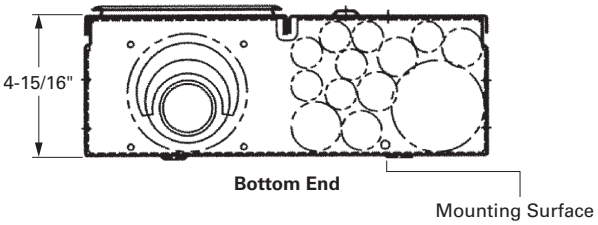


**Bottom End**

### Semi-Flush Stucco Unit Knockout Configurations and Dimensions for MBE2040B200BTS, MBE2040B225BTS, MBE2040B200BTF and MBE2040B225BTF

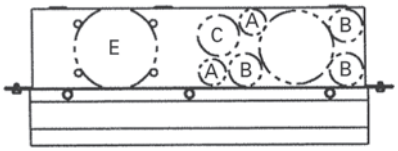


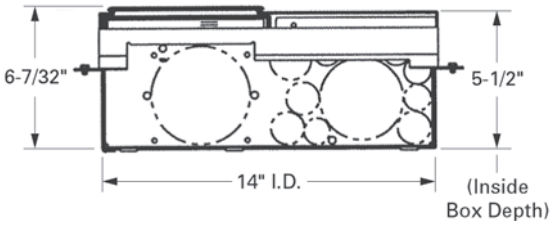


### Knockout Configurations and Dimensions for Catalog Numbers CMBXP200BTS, CMBXB200BTS, CMBX1212P200BTS and CMBX3242P200BTS, CMBX3242B200BTS, CMBX1212B200BTS

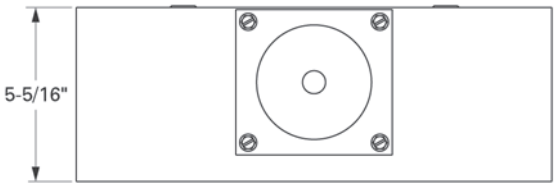


Top Endwall

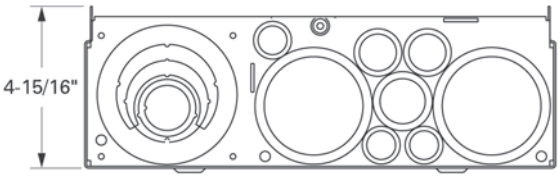


Bottom Endwall

### Knockout Configurations and Dimensions for Catalog Numbers MBT48B125BTS, MBT48B150BTS, MBT48B200BTS and MBT48P200BTS

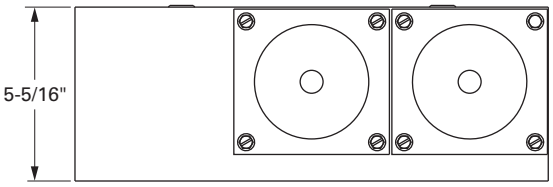


Top Surface

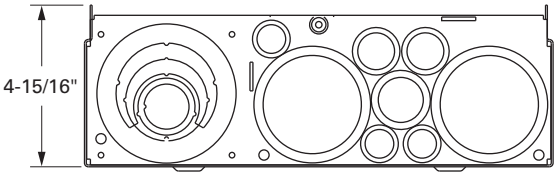


Bottom

### Surface Unit Knockout Configurations and Dimensions for MBE2040B200BTS, MBE2040B225BTS, MBE2040B200BTF and MBE2040B225BTF

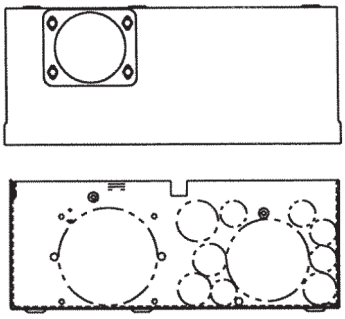

Approximate Dimensions in Inches (mm)

### Knockouts for Non-EUSERC Units Catalog Numbers—MBB150BTS, MBB200BTS, MBP200BTS, MB816P200BTS, MB816P200BTSCU, MB816P200BTSD, MB816B200BTS, MB816B200BTSCU, MB2040P200BTS, MB2040B200BTS, MBP200BTSD, MBP200SD, MB816P200STD, MB2040B150SD, MB2040B200SD and MB2040P200SD

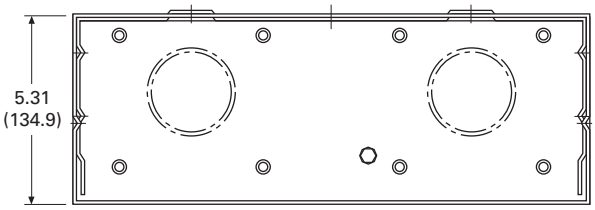


Top Surface

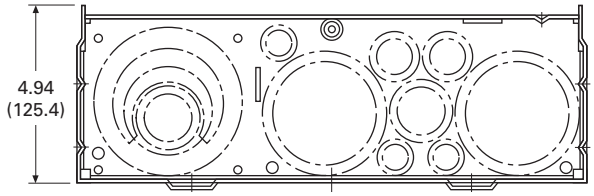


Bottom

### Top Endwall (Surface)

| Hub Provision Catalog Number | Quantity |
|---|---|
| **DS100H2** | ① |
| **DS125H2** | ① |
| **DS150H2** | ① |
| **DS200H2** | ① |
| **DS250H2** | ① |
| **DS300H2** | ① |
| **DS900AP** (Adapter Plate) ② | ① |

### Knockouts for Non-EUSERC Units Catalog Number—CHMMB100BTS

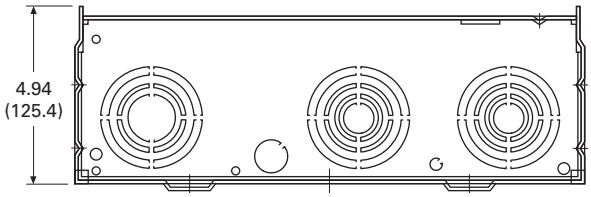


Bottom

### Bottom Endwall

| Knockout Size Dimensions in Inches (mm) | Quantity |
|---|---|
| 0.31 (7.9) | 1 |
| 0.50 (12.7) | 1 |
| 0.50, 0.75, 1.00, 1.25, 1.50, 2.00, 2.50 (12.7, 19.1, 25.4, 31.8, 38.1, 50.8, 63.5) | 2 |
| 1,00, 1.25, 1.50, 2.00, 2.50 (25.4, 31.8, 38.1, 50.8, 63.5) | 1 |

### Knockouts for Non-EUSERC Units Catalog Numbers—CMB2424B200BTS, MBB150BTSCR, MBB200BTSCR, MBB150BTSC, MBB200BTSC and CMB2436B200BTS

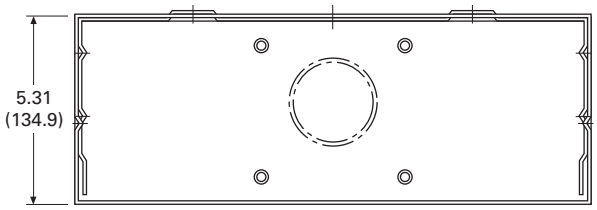


Top Surface (Catalog Numbers with SC and SCR Suffix Only)

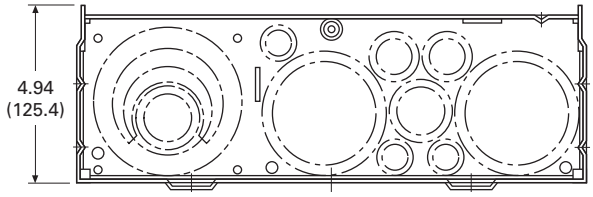


Bottom

### Bottom Endwall

| Knockout Size Dimensions in Inches (mm) | Quantity |
|---|---|
| 0.31 (7.9) | 3 |
| 0.50 (12.7) | 3 |
| 0.50, 0.75 (12.7, 19.1) | 2 |
| 0.75, 1.00 (12.7, 25.4) | 1 |
| 1.25, 1.50, 2.00, 2.50 (19.1, 38.1, 50.8, 63.5) | 2 |
| 1.50, 2.00, 2.50, 3.00 (38.1, 50.8, 63.5, 76.2) | 1 |

### Knockouts for Non-EUSERC Units Catalog Numbers—CHMMB150BTS and CHMMB200BTS

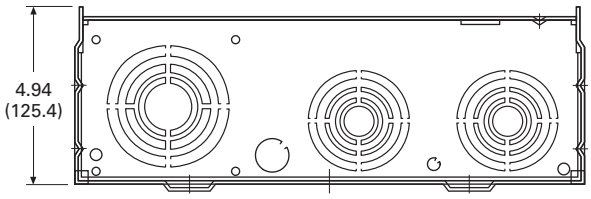


Bottom

### Bottom Endwall

| Knockout Size Dimensions in Inches (mm) | Quantity |
|---|---|
| 0.31 (7.9) | 1 |
| 0.50 (12.7) | 1 |
| 0.50, 0.75, 1.00, 1.25, 1.50, 2.00, 2.50 (12.7, 19.1, 25.4, 31.8, 38.1, 50.8, 63.5) | 2 |
| 1.00, 1.25, 1.50, 2.00, 2.50, 3.00 (25.4, 31.8, 38.1, 50.8, 63.5, 76.2) | 1 |

***Notes***

① For details regarding quantities, please contact the Technical Resource Center (TRC) at 1-877-ETN-CARE.

② Use when DS H1 Type 1, 1.25 and 1.50-inch hubs are needed.

House Panels

## Contents


| *Description* | *Page* |
|---|---|
| Residential Meter Breakers | **V1-T4-37** |
| Non-EUSERC Combination Service Entrance Devices 100–200 A Styles | **V1-T4-39** |
| Meets EUSERC Requirements Service Entrance Devices 100–225 A. | **V1-T4-48** |
| West Coast All-In-One Design | **V1-T4-59** |
| Mechanical Interlock Cover | **V1-T4-65** |
| House Panels | |
| Commercial Safety Sockets | **V1-T4-83** |
| CH Style Renovation Solutions | **V1-T4-86** |
| Aluminum Meter Breakers | **V1-T4-87** |




## House Panels

### Product Description

Eaton's House Panels offer a faster, easier and safer installation.These 400 A units are ideal for larger homes in North America that require meter breakers. Available in both CH and BR styles, these service entrance devices consist of a meter socket and a distribution section. In response to contractor feedback, these panels have been redesigned with a focus on flexibility, simplified wiring, and an overall ease of installation. All units come standard with a 22 kAIC main breaker.The load conductors can exit the top, bottom, side or back for greater application and installation flexibility.

### Application Description

Additionally, Eaton's House Panels can be used for apartments, condominiums, clubhouses or common areas.

### Features, Benefits and Functions

- NEMA 3R rainproof
- Rated for service entrance equipment
- Lever bypass socket available on certain catalog numbers
- Pin type door hinges
- Socket to distribution section is connected via insulated cable for safety
- Second main space can accept 100–200 A BW, CSR or CSR breakers

### Standards and Certifications

- Ring style units meet EUSERC requirements
- UL listed

Listed

## Product Selection

**House Panels**

### 400 A "House Panels"

| Ampere Rating | Security ① | Bypass ② | Main Breaker | Optional Secondary Main Breaker (Not Included) | Service Type | kAIC | Dist. | Line Side Main Lugs and Neutral (Lugs Not Included) | Semi-Flush Catalog Number ③ | Surface Catalog Number |
|---|---|---|---|---|---|---|---|---|---|---|
| 300 | Ringless | Lever | CSR2150 | BW/CSR | OH/UG | 22 | 8/16 | Lug landings for compression | — | **HP816P300BSL** |
| 300 | Ringless | Lever | CSR2150 | BW/CSR | UG | 22 | None | | — | **HPC30SHL** |
| 400 | Ring | None | CSR2200N | CSH | UG | 22 | 32/42 | | — | **CG403242SH** ④ |
| 400 | Ring | None | CSR2200N | CSH | UG | 22 | 12/12 | | — | **CG1212P400BS** ④⑤ |
| 400 | Ring | Manual | CSR2200 | BRH/CSR | UG | 22 | None | | — | **HP40SHA** ⑥ |
| 400 | Ring | Manual | CSR2200 | BRH/CSR | UG | 22 | 40/40 | | — | **HP404040SHA** ⑥⑦ |
| 400 | Ring | None | DK2400 | None | UG | 22 | None | | — | **HP40** ④ |
| 400 | Ring | None | CSR2200 | BRH/CSR | UG | 22 | None | | — | **HP40SH** ④④⑥ |
| 400 | Ring | None | DK2400 | None | UG | 22 | 24/42 | | — | **HP402442** ④ |
| 400 | Ring | None | CSR220 | BRH/CSR | UG | 22 | 40/40 | | **HP404040SHF** ④ | **HP404040SH** ④⑥ |
| 400 | Ring | Manual | CSR2200 | BRH/CSR | UG | 22 | 40/40 | | **HP404040SHFA** ⑦ | — |
| 400 | Ring | None | CSR2200 | BRH/CSR | UG | 22 | 8/16 | | — | **HP816P400BS** ④⑤⑥ |
| 400 | Ringless | Lever | CSR2200N | CSH | UG | 22 | 12/12 | | — | **CG1212P400BSL** ⑤ |
| 400 | Ringless | Lever | CSR2200N | CSH | UG | 22 | 42/42 | | — | **CG404242SHL** |
| 400 | Ringless | Lever | CSR2200 | BRH/CSR | UG | 22 | None | | — | **HP40SHL** ⑥ |
| 400 | Ringless | Lever | CSR2200 | BRH/CSR | OH/UG | 22 | None | | — | **HPC40SHL** ⑥ |
| 400 | Ringless | Lever | CSR2200 | BRH/CSR | UG | 22 | 40/40 | | — | **HP404040SHL** ⑥ |
| 400 | Ringless | Lever | CSR2200 | BRH/CSR | UG | 22 | 8/16 | | — | **HP816P400BSL** ⑤⑥ |
| 400 | Ringless | Lever | CSR2200 | BRH/CSR | OH/UG | 22 | 4/6 | | — | **HPC4046SHLG** ⑧ |
| 400 | Ringless | Lever | CSR2200 | BRH/CSR | OH/UG | 22 | 4/6 | | — | **HPC4046SHLX** ⑨ |
| **Bolt-On Socket** | | | | | | | | | | |
| 400 | Ringless | None | DK2400 | None | UG | 22 | 24/40 | Lug landings for compression | — | **HP402440B** ⑩ |
| 400 | Ringless | None | CSR2200 | BRH/CSR | UG | 22 | 24/40 | | — | **HP402440SBH** ⑥⑩ |

***Notes***

① Confirm security type for individual EUSERC utility requirements.
② Included in all of the following devices.
③ If unit needs to be semi-flush, order accessory item catalog number **HPPR** to convert **all** surface mounting devices to semi-flush mounting.
④ Reference drawing EUSERC DWG-302A, G1.
⑤ Feed-through lugs included.
⑥ For 10 kAIC, use BR or BW breakers as secondary main.
⑦ Includes manual bypass and additional ground lug to meet Nevada Power requirements.
⑧ Georgia Power approved.
⑨ Xcel approved.
⑩ Bolt-on meter socket.

## Accessories

- Top-feed gutter kit to ease top-fed installation
- Re-engineered, adjustable flush mount kit for a cleaner installation
- 100 A second main breaker kit
- New 750 kcmil box type lug kit

### Accessories

| | Description | Catalog Number |
|---|---|---|
| **HP40TFKIT** | Top feed kit to convert surface mount house panel for overhead service | **HP40TFKIT** |
| **HPBLK750** | 750 kcmil lug kit | **HPBLK750** |
| **HPBPK** | Manual bypass kit | **HPBPK** |
| **HP2NDMNKIT** 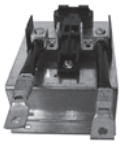 | Flushmount kit | **HPPR** |
| | 100 A 2nd main kit (Type BR branch) | **HP2NDMNKIT** |
| | 100 A 2nd main kit (Type CH branch) | **CH2NDMNKIT** |
| | 5th jaw for lever bypass house panels | **ARP00326CH** |
| | Locates 3-inch (only) incoming conduit to back of can by utilizing the 4-inch knockout useful in semi-flush applications | **HP40HUBPLATE** |

## Wiring Diagrams

### *Type CH Style House Panels*

### Type CH Wiring—Catalog Number CG403242SH

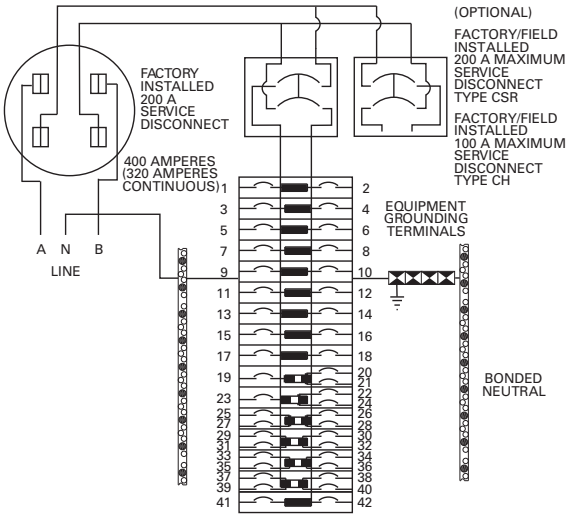


### Type CH Wiring—Catalog Number CG404242SHL

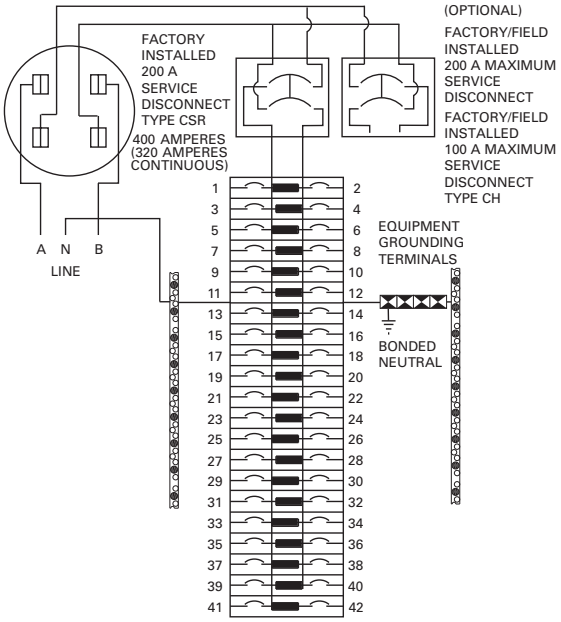


### Type CH Wiring—Catalog Number CG1212P400BS

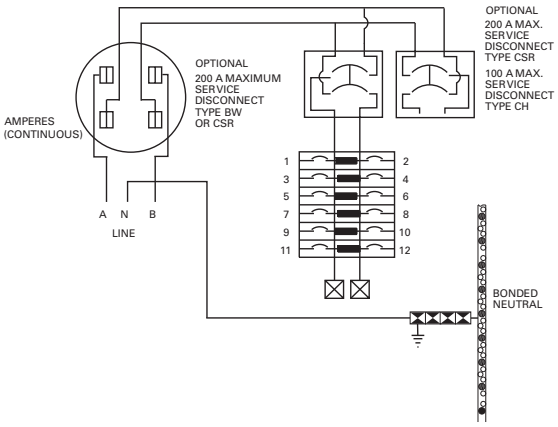


### Type CH Wiring—Catalog Number CG1212P400BSL

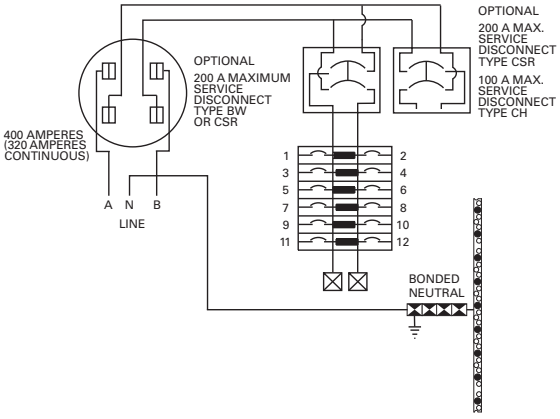


### Type CH Wiring Diagram Key

- ○ #14-6 AWG
- ● #14-1/0 AWG
- ▬ 1/0 – 300 kcmil
- ⊠ #4 AWG – 300 kcmil

***Type BR Style House Panels***

## Type BR Wiring—Catalog Number HP40

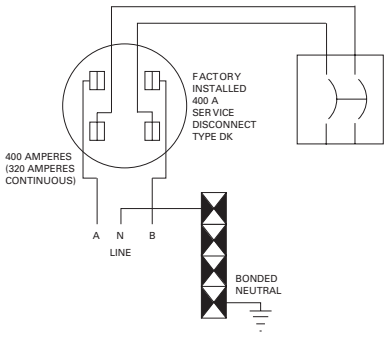


## Type BR Wiring—Catalog Number HP816P400BS

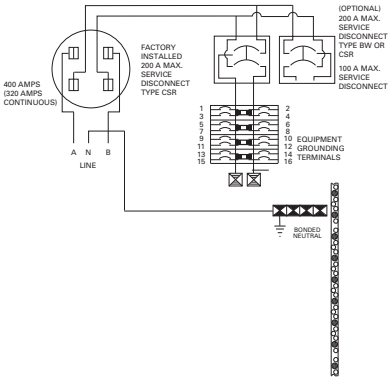


## Type BR Wiring—Catalog Number HP402440B

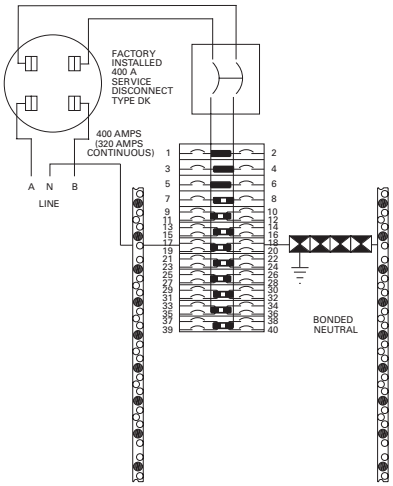


## Type BR Wiring—Catalog Number HP402440SBH

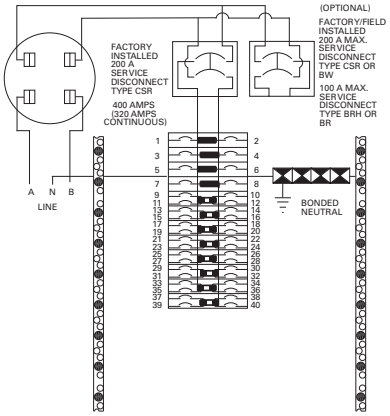


## Type BR Wiring—Catalog Number HP404040SH

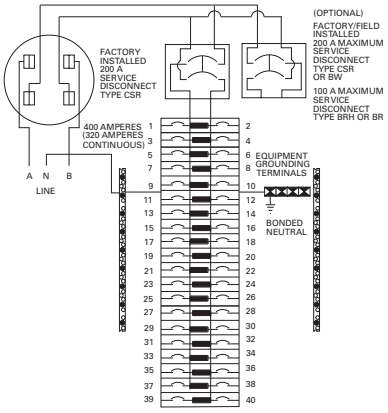


## Type BR Wiring Diagram Key

- ○ #14-6 AWG
- ● #14-1/0 AWG
- ▽ #6 AWG – 250 kcmil
- ▼ #1 AWG – 300 kcmil
- ⧗ 1/0 – 300 kcmil
- ☒ #4 AWG – 300 kcmil
- ☒ #6 AWG – 300 kcmil

## Type BR Wiring—Catalog Number HP402442

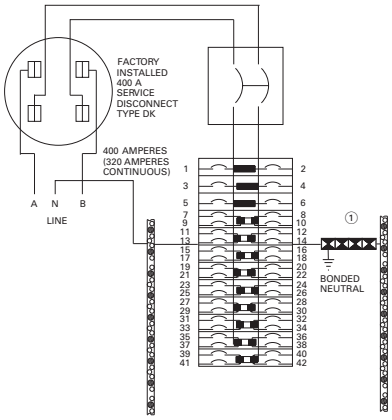


## Type BR Wiring—Catalog Number HP404040SHL

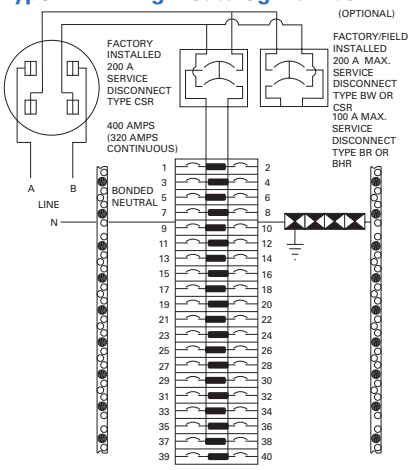


## Type BR Wiring—Catalog Number HP40SH

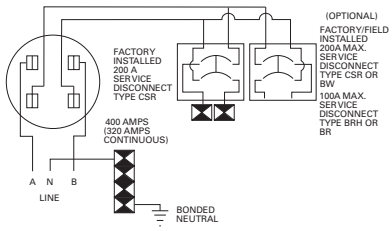


## Type BR Wiring—Catalog Number HP40SHL

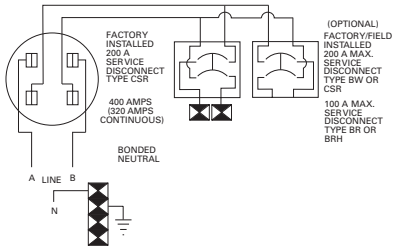


## Type BR Wiring—Catalog Number HP404040SHA

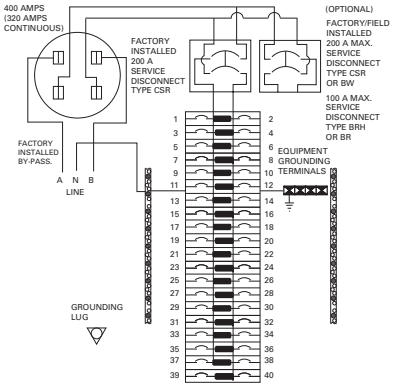


## Type BR Wiring—Catalog Number HP816P400BSL

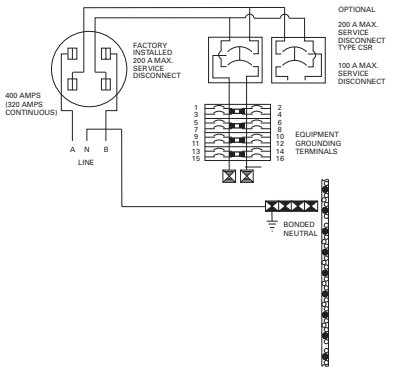


## Type BR Wiring Diagram Key

- ○ #14-6 AWG
- ● #14-1/0 AWG
- ▽ #6 AWG – 250 kcmil
- ▼ #1 AWG – 300 kcmil
- ⧗ 1/0 – 300 kcmil
- ⧗ 1/3 – 300 kcmil ①
- ⊠ #4 AWG – 300 kcmil
- ⊠ #6 AWG – 300 kcmil

### Catalog Numbers HPC40SHL and HPC30SHL

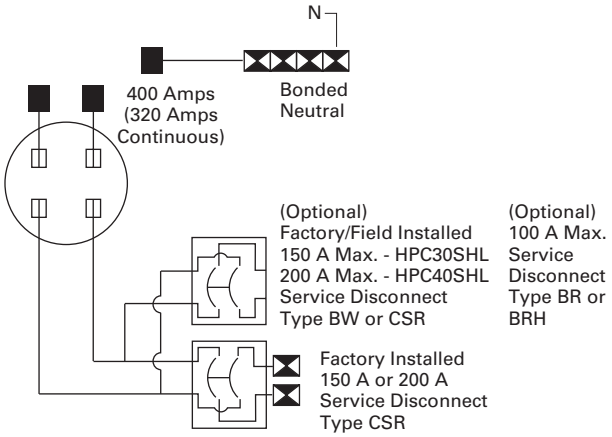


## Dimensions and Knockouts

Approximate Dimensions in Inches (mm)

### Catalog Numbers HPC40SHL and HPC30SHL

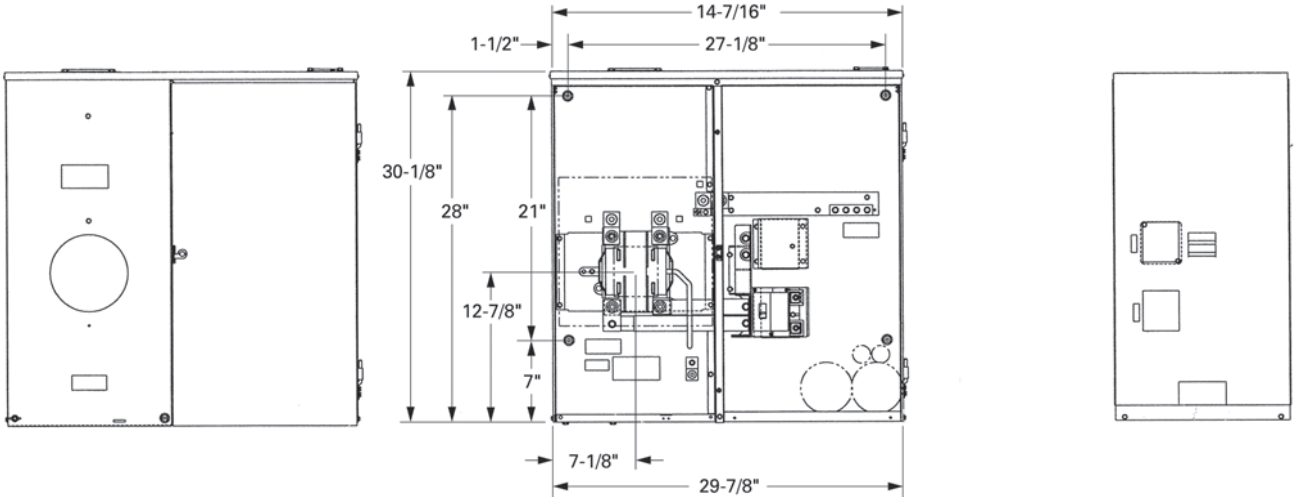


### Knockout Configurations and Dimensions for HPC40SHL and HPC30SHL

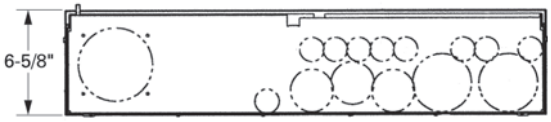

Approximate Dimensions in Inches (mm)

## House Panel Dimensions and Knockouts—For All House Panels Except Those With HPCPREFIX

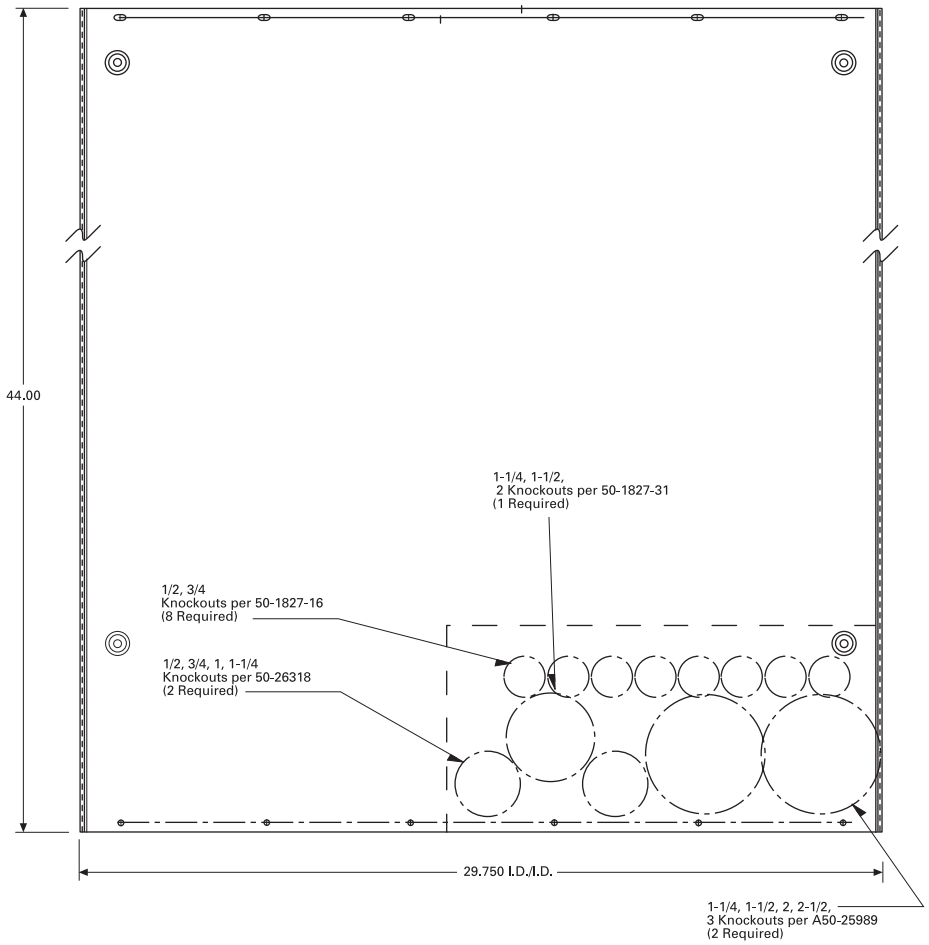


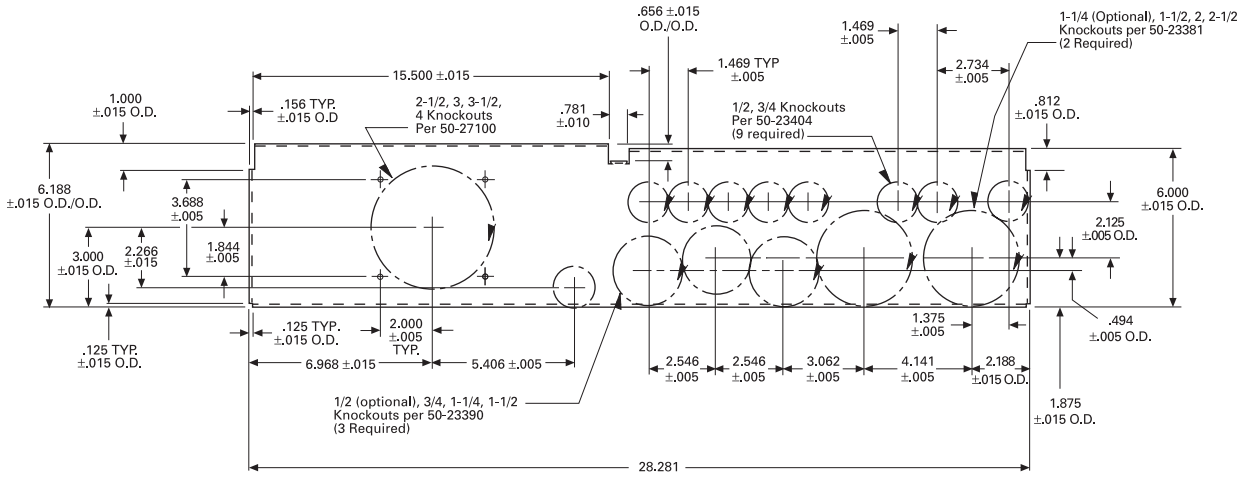

Residential Meter Breakers

## Contents


| *Description* | *Page* |
|---|---|
| Residential Meter Breakers | **V1-T4-37** |
| Non-EUSERC Combination Service Entrance Devices 100–200 A Styles | **V1-T4-39** |
| Meets EUSERC Requirements Service Entrance Devices 100–225 A. | **V1-T4-48** |
| West Coast All-In-One Design | **V1-T4-59** |
| Mechanical Interlock Cover | **V1-T4-65** |
| House Panels | **V1-T4-75** |
| Commercial Safety Sockets | |
| CH Style Renovation Solutions | **V1-T4-86** |
| Aluminum Meter Breakers | **V1-T4-87** |




## Commercial Safety Sockets

### Product Description

A Commercial Safety Socket is service entrance equipment that consists of a commercial meter socket with a test block, and may come with or without a loadcenter type distribution section.

### Application Description

Eaton's Commercial Safety Sockets are typically used where a single meter socket or single meter socket with a distribution section are needed. These areas could include a commercial business, commercial office building, individual retail facilities and signs and street lighting. Commercial Safety Sockets are typically used in EUSERC utility regions.

### Features, Benefits and Functions

***Commercial Safety Sockets with No Secondary Feeder***

- Ring type continuous duty meter socket. 600 Vac maximum, single- or three-phase
- 100 and 200 A units
- Bussed connection from meter socket to test block
- For use with self-contained watthour meter
- Conform with EUSERC standards
- NEMA 3R construction for indoor/outdoor applications
- Units can be individually mounted with provisions for hub kits and pole mounting

***Overhead Combination Units***

- NEMA 3R construction for indoor/outdoor applications
- T-fuse protection, 480 Vac maximum
- Line at top, load at bottom
- 100 and 200 A units available up to 480 Vac maximum
- Circuit breaker protection to 480 Vac maximum in 10, 22, 42 and 100 kAIC ratings
- Factory-cabled connection from test block to line side of tenant main

***Underground Combination Units***

- 100 and 200 A units
- 480 Vac maximum
- NEMA 3R construction for indoor/outdoor applications
- Underground or overhead feed
- Provisions for self-contained watthour meter
- Bussed connection from meter socket to test block
- Tenant main disconnects are available with circuit breakers up to 480 Vac maximum and T-fuse mains, 240 Vac maximum
- Load wires can exit top or bottom

## Product Selection

### *Overhead and Underground Combination Units and Individual Units*

CH127TB

### Individual Safety Sockets—600 V Maximum—No Secondary Feeder Devices ①

| Ampere Rating | No. of Jaws | AC Voltage | Service | Phase, Wire | Maximum Interrupting Rating | Wire Size | Catalog Number |
|---|---|---|---|---|---|---|---|
| 125 | 4 | 600 | OH/UG | Single-phase, three-wire | ② | #14–2/0 | **CH114TB** |
| 125 | 5 | 600 | OH/UG | Three-phase, three-wire | ② | #14–2/0 | **CH115TB** |
| 125 | 7 | 600 | OH/UG | Three-phase, four-wire | ② | #14–2/0 | **CH117TB** |
| 200 | 4 | 600 | OH/UG | Single-phase, three-wire | ② | #6–250 kcmil | **CH124TB** |
| 200 | 5 | 600 | OH/UG | Three-phase, three-wire | ② | #6–250 kcmil | **CH125TB** |
| 200 | 7 | 600 | OH/UG | Three-phase, four-wire | ② | #6–250 kcmil | **CH127TB** |

### Commercial Safety Sockets with Provision for Main Circuit Breaker ③

| Ampere Rating | No. of Jaws | AC Voltage | Service | Phase, Wire | Feeder Circuit Breaker | Maximum Interrupting Rating | Wire Size | Catalog Number |
|---|---|---|---|---|---|---|---|---|
| 125 | 4 | 240 | OH | Single-phase, three-wire | Provision ④ | ⑥ | #14–2/0 | **CH214MTBLB** |
| 125 | 7 | 208/120 | OH | Three-phase, four-wire | Provision ④ | ⑥ | #14–2/0 | **CH217MTBLB** |
| 125 | 4 | 240 | UG | Single-phase, three-wire | Provision ④ | ⑥ | #14–2/0 | **CHU214MTBLB** |
| 125 | 7 | 208/120 | UG | Three-phase, four-wire | Provision ④ | ⑥ | #14–2/0 | **CHU217MTBLB** |
| 200 | 4 | 120/240 | OH | Single-phase, three-wire | Provision ⑤ | ⑦ | #6–250 kcmil | **CH224MTBLB** |
| 200 | 7 | 208/120 | OH | Three-phase, four-wire | Provision ⑤ | ⑦ | #6–250 kcmil | **CH227MTBLB** |
| 200 | 4 | 120/240 | UG | Single-phase, three-wire | Provision ⑤ | ⑦ | #6–250 kcmil | **CHU224MTBLB** |
| 200 | 7 | 208/120 | UG | Three-phase, four-wire | Provision ⑤ | ⑦ | #6–250 kcmil | **CHU227MTBLB** |

### Commercial Safety Sockets with Main Circuit Breaker Included ③

| Ampere Rating | No. of Jaws | AC Voltage | Service | Phase, Wire | Feeder Circuit Breaker | Maximum Interrupting Rating | Wire Size | Catalog Number |
|---|---|---|---|---|---|---|---|---|
| 100 | 7 | 480/277 | OH | Three-phase, four-wire | EHD3100 | 14 kA | #14–2/0 | **CH217MTBM515** |
| 100 | 7 | 480/277 | UG | Three-phase, four-wire | EHD3100 | 14 kA | #14–2/0 | **CHU217MTBMS15** |
| 200 | 7 | 480/277 | OH | Three-phase, four-wire | JD3200 | 25 kA | #6–250 kcmil | **CH227MTBHMS15** |
| 200 | 7 | 480/277 | UG | Three-phase, four-wire | JD3200 | 25 kA | #6–250 kcmil | **CHU227MTBHMS15** |

***Notes***

① Reference drawing EUSERC DWG-305, G1.
② If being protected by a fuse, the interrupting rating of the unit is limited to the fuse AIC rating. If being protected by a single- or three-phase, 600 V breaker, the AIC is 14 kA; by a maximum 400 A, single-phase, 240 V breaker, the AIC is 18 kA; by a maximum 200 A, single- or three-phase, 240 V breaker, the AIC is 18 kA; by a maximum 125 A, single-phase, 240 V breaker, the AIC is 22 kA.
③ Reference drawing EUSERC DWG-305A, G1.
④ Order plug-on Type BR, BRH or BRHH circuit breaker separately.
⑤ Order Type CC breaker or CCH breaker separately.
⑥ Type BR = 10 kA; Type BRH = 22 kA; Type BRHH = 42 kA.
⑦ Type CCV = 10 kA; Type CCVH = 25 kA.

***Underground Combination Units and Safety Socket Accessories***

**CHU227MTBP**

## Commercial Safety Sockets with T-Fuse Switch ①

| Ampere Rating | No. of Jaws | AC Voltage | Service | Phase, Wire | Feeder Circuit Breaker | Maximum Interrupting Rating | Wire Size | |
|---|---|---|---|---|---|---|---|---|
| 100 | 4 | 120/240 | OH | Single-phase, three-wire | 200 kA | #14–2/0 | | **CH214MTBP** |
| 100 | 7 | 208/120 | OH | Three-phase, four-wire | 200 kA | #14–2/0 | | **CH217MTBP** |
| 100 | 4 | 120/240 | UG | Single-phase, three-wire | 200 kA | #14–2/0 | | **CHU214MTBP** |
| 100 | 7 | 208/120 | UG | Three-phase, four-wire | 200 kA | #14–2/0 | | **CHU217MTBP** |
| 200 | 4 | 120/240 | OH | Single-phase, three-wire | 200 kA | #6–250 kcmil | | **CH224MTBP** |
| 200 | 7 | 208/120 | OH | Three-phase, four-wire | 200 kA | #6–250 kcmil | | **CH227MTBP** |
| 200 | 4 | 120/240 | UG | Single-phase, three-wire | 200 kA | #6–250 kcmil | | **CHU224MTBP** |
| 200 | 7 | 208/120 | UG | Three-phase, four-wire | 200 kA | #6–250 kcmil | | **CHU227MTBP** |

## Hubs

| Description | Carton Weight Lbs (kg) | Catalog Number |
|---|---|---|
| Hub closure plate | 3 (1.4) | **ARP00002CHB** |
| 1.00-inch (25.4 mm) hub | 3 (1.4) | **ARP00003CH1** |
| 1.25-inch (31.8 mm) hub | 3 (1.4) | **ARP00004CH12** |
| 1.50-inch (38.1 mm) hub | 3 (1.4) | **ARP00005CH15** |
| 2.00-inch (50.8 mm) hub | 3 (1.4) | **ARP00006CH2** |
| 2.50-inch (63.5 mm) hub | 3 (1.4) | **ARP00007CH25** |

## Jaws

| Description | Part Number |
|---|---|
| 5th jaw kit | **CH50371** |

***Notes***

① Reference drawing EUSERC DWG-305A, G1.

Order Type CC or CHH breaker separately.

CH Style Renovation Solutions

## Contents


| *Description* | *Page* |
|---|---|
| Residential Meter Breakers | **V1-T4-37** |
| Non-EUSERC Combination Service Entrance Devices 100–200 A Styles | **V1-T4-39** |
| Meets EUSERC Requirements Service Entrance Devices 100–225 A. | **V1-T4-48** |
| West Coast All-In-One Design | **V1-T4-59** |
| Mechanical Interlock Cover | **V1-T4-65** |
| House Panels | **V1-T4-75** |
| Commercial Safety Sockets | **V1-T4-83** |
| CH Style Renovation Solutions Aluminum Meter Breakers | **V1-T4-87** |


## CH Style Renovation Solutions

### Product Description

- Ring style meter socket design
- Provisional main breaker or factory main breaker available
- Center top feed design
- Exit bottom or top design
- 100 A, 125 A or 200 A ratings available

### Product Selection

#### CH Style Retrofit Solutions ①

| Ampere Rating | Description | Catalog Number |
|---|---|---|
| 100 | CH, 22 circuit, provision, center top feed, exit top or bottom, flush, OH/UG | **CMBE22P100BTFR** |
| 125 | CH, 22 circuit, provision, center top feed, exit top or bottom, surface, OH/UG | **CMBE22P125BTSR** |
| 125 | CH, 22 circuit, provision, center top feed, exit top or bottom, flush, OH/UG | **CMBE22P125BTFR** |
| 200 | CH, 32/42 circuit, 200 A main breaker, center top feed, exit top or bottom, semi-flush, OH/UG | **CMBE3242B200BTS** |
| 200 | CH, 32/42 circuit, 200 A main breaker, center top feed, exit top or bottom, flush, OH/UG | **CMBE3242B200BTFR** |

***Note***

① Reference drawing EUSERC DWG-308, G1.

## Contents


| *Description* | *Page* |
|---|---|
| Residential Meter Breakers | **V1-T4-37** |
| Non-EUSERC Combination Service Entrance Devices 100–200 A Styles | **V1-T4-39** |
| Meets EUSERC Requirements Service Entrance Devices 100–225 A. | **V1-T4-48** |
| West Coast All-In-One Design | **V1-T4-59** |
| Mechanical Interlock Cover | **V1-T4-65** |
| House Panels | **V1-T4-75** |
| Commercial Safety Sockets | **V1-T4-83** |
| CH Style Renovation Solutions | **V1-T4-86** |
| Aluminum Meter Breakers | |




## Aluminum Meter Breakers

### Product Description

Eaton's Aluminum Meter Breaker enclosure and external cover offers excellent corrosion resistance in the harshest coastal environments. The meter breaker's light weight and overhead/underground design offers flexibility and ease of installation.

### Features and Benefits

- Overhead/underground design provides flexibility with wiring options
- Steel meter guides are standard, which provides a means of easy installation of the utility glass bulb meter into the meter's jaws
- Main Lug Only design includes six two-pole breaker locations, which complies with National Electrical Code 225.33 (maximum number of disconnects)
- Distribution section accepts BR branch breakers
- Single-phase, three-wire 120/240 Vac applications
- Hub closure plate is provided, attached to the top of the device
- Optional fifth jaw can be applied to 3 o'clock or 9 o'clock meter socket position
- 10-year warranty
- For customer support, contact Eaton's Technical Resource Center at 1-877-ETN-CARE
- For additional information or to place an order, contact your local Eaton representative or visit us at www.eaton.com

### Catalog Number Selection

#### Meter Breakers

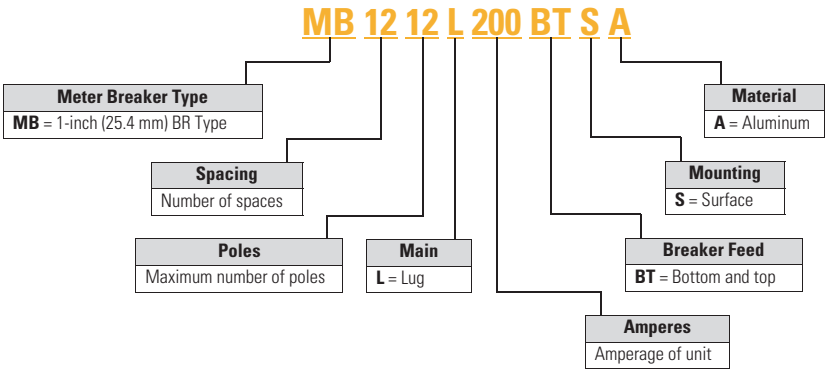

**Systems for Residential and Commercial Application**

## Contents


| *Description* | *Page* |
|---|---|
| Systems for Residential and Commercial Applications | |
| Meter Packs | **V1-T4-90** |
| Type CCV 120/240 V Tenant Main Circuit Breaker | **V1-T4-95** |
| Type CV 120/240 V Tenant Main Circuit Breaker | **V1-T4-96** |
| Meter Packs—1MP, 1MM and 3MM Main Tenant Circuit Breakers | **V1-T4-98** |
| Main Service Modules | **V1-T4-101** |
| Surge Metering | **V1-T4-115** |
| Group Metering Inline Current Transformer Cabinets | **V1-T4-116** |
| Residential Meter Stacks | **V1-T4-118** |
| 1MP, 1MM and 3MM Main Tenant Circuit Breakers | **V1-T4-127** |
| Phase Balanced Stack | **V1-T4-128** |
| Commercial Meter Stack Modules | **V1-T4-129** |
| 35MM, 37MM, 35SS and 37SS Main Tenant Circuit Breakers | **V1-T4-136** |


## Systems for Residential and Commercial Applications

### Product Description

Group metering is a service entrance product line that consists of a main device and multiple meter sockets in one enclosure or several connected enclosures. Group metering allows the customer to install a multiple tenant-metering device in one location while providing a space and installation cost savings.

### Application Description

Eaton's Electrical Sector offers two group metering designs—Meter Packs and Gangable Metering. Meter Packs, also called All-in-Ones, consist of main lugs and up to six meter sockets in one enclosure. Meter Packs are supplied as one complete unit and the user cannot "add" additional meter sockets to the unit in the future. The most common application for Meter Packs is garden apartments, small condominiums and townhouses where six or less units are metered through one centrally located Meter Pack.

***Gangable Metering (Main Service Modules and Meter Stacks)***

The second type of group metering is Gangable Metering, which consists of a Main Service Module used in conjunction with a Meter Stack to make a custom metering lineup. The Main Service Module can be main lug, main circuit breaker, main fusible switch or bolted pressure switch. The Meter Stack is offered with various meter sockets and bus ratings. This type of custom lineup allows the owner to add/remove meter sockets and main devices to meet future need. Gangable Metering is often used in large condominiums, strip malls and light commercial applications where more than six units are metered, or there will be a future need to add more units.

## Features, Benefits and Functions

### *Clip-Tight™ Socket*

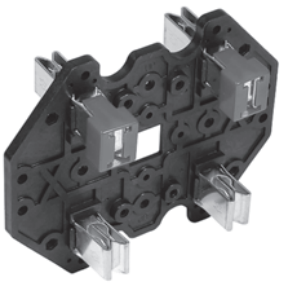

***Clip-Tight Socket***

Eaton's series of 1MP, 1MM, 3MM metering devices incorporate the only socket base in the industry without fasteners. This component uses jaws on both sides of a thermoplastic polyester glass fiber reinforced (PBT) base, eliminating the need for self-tapping screw connections to vertical busbars.

### *Field Phase Balancing*

***Field Phase Balancing***

Due to popular incoming three-phase voltage systems and single-phase outgoing loads, installers have the option to field phase balance on the individual stack (A-B, B-C, A-C). This feature eliminates the chance of installing an incorrectly phased device due to its versatility.

### *Lever Bypass*

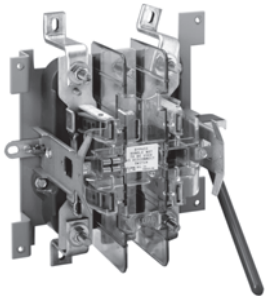

***Lever Bypass***

Due to commercial requirements, Eaton offers a lever bypass (as standard) on all 35MM and 37MM devices. Each socket base consists of a lever bypass, which also releases the jaws (when lever is engaged in bypass position), enabling utility company mechanics to easily remove and/or insert utility meter.

### *Main Tenant Breaker Cover*

***Main Tenant Breaker Cover***

Each tenant circuit breaker is protected by a lockable raintight cover that secures the breaker against unauthorized operation. The tenant breaker cover is a high impact plastic to resist wear, rusting and corrosion.

### *One-Piece Vertical Busbar*

***One-Piece Vertical Busbar***

Eaton's series of 1MP, 1MM, 3MM meter stacks embody a one-piece busbar construction to each socket, as well as a one-piece cross bus to each tenant main. Because the Eaton design uses the Clip-Tight meter socket and does not have busbar joints, the chance of hot spots occurring is virtually eliminated.

### *Horn and Manual Bypass*

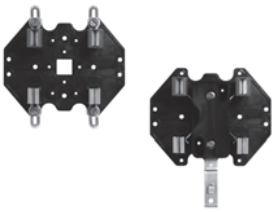

***Horn and Manual Bypass***

With an increasing demand for uninterrupted power, Eaton's series of 1MP, 1MM and 3MM meter sockets offer horn (ringless style) and manual (ring style) field-installable bypass accessories. These accessories provide uninterrupted tenant service if a meter is pulled for inspection or replacement.

### *Test Bypass Disconnects*

***Test Bypass Disconnects***

Eaton also provides commercial meter stacks with EUSERC required test-bypass disconnects (35SS and 37SS). This bypass is used in the same applications as the lever bypass and it is required by EUSERC utilities.

### *Mounting Features*

***Mounting Features***

A standard mounting rail and factory-installed swing away feet speed up and simplify installation.

## Standards and Certifications

- UL listed

Listed

Meter Pack

## Contents


| *Description* | *Page* |
|---|---|
| Systems for Residential and Commercial Applications | **V1-T4-88** |
| Meter Packs | |
| Type CCV 120/240 V Tenant Main Circuit Breaker | **V1-T4-95** |
| Type CV 120/240 V Tenant Main Circuit Breaker | **V1-T4-96** |
| Meter Packs—1MP, 1MM and 3MM Main Tenant Circuit Breakers | **V1-T4-98** |
| Main Service Modules | **V1-T4-101** |
| Surge Metering | **V1-T4-115** |
| Group Metering Inline Current Transformer Cabinets | **V1-T4-116** |
| Residential Meter Stacks | **V1-T4-118** |
| 1MP, 1MM and 3MM Main Tenant Circuit Breakers | **V1-T4-127** |
| Phase Balanced Stack | **V1-T4-128** |
| Commercial Meter Stack Modules | **V1-T4-129** |
| 35MM, 37MM, 35SS and 37SS Main Tenant Circuit Breakers | **V1-T4-136** |


## Meter Packs

### Product Overview

- Eaton's 1MP units are self-contained (main terminal box included) for installations requiring up to six meter socket positions in a single enclosure
- Units are not gangable with any other metering device
- Approved by major power companies, UL listed, suitable as service equipment and meet the service and electrical requirements of EUSERC and CECHA
- Series rating up to 100 kAIC
- All ringless cover devices include fifth jaw as standard
- Ring type devices do not include fifth jaw as standard. Order 1MM5JK if needed
- Bondable neutral
- 120/240 Vac, single-phase three-wire metering device
- Up to 600 A maximum horizontal bus rating
- Incoming lugs not included (phase A, phase B and neutral)
- Indoor/outdoor construction
- Provision for two-pole breaker (plug-on type for 125 A sockets and bolt-on type for 200 A sockets)—circuit breakers not included
- Underground incoming feed
- Aluminum or copper bus

## Catalog Number Selection

**1 MP 4 12 4 R C**

**Single-Phase**

**Type of Metering**
**MP** = Meter pack

**Number of Meters**
**2, 3, 4, 5 or 6**
**Blank** = Accessory

**Ampere Rating**
**12** = 125 A
**20** = 200 A
**Blank** = Accessory

**Bus Ampere Rating**
**2** = 200 A
**4** = 400 A
**6** = 600 A
**Blank** = Accessory

**Security or Accessory Code**
**R**= Ring
**RRL** = Ringless
**RRLB** = Ringless with horn bypass
**LK** = Lug kit (accessory)
**SC** = Crimp lug landing pad kit (accessory)

**Bus Material**
**C** = Copper bus
**Blank** = Aluminum bus

### When Ordering:

1. Determine catalog number of the basic device.
2. Include Lug Kit for incoming section. See **Page V1-T4-94**.
3. Find quantity and catalog numbers for tenant circuit breakers. (Order one breaker per socket.) See **Page V1-T4-94**.
4. Select required accessories. See **Page V1-T4-138**.

## Product Selection

### *Meter Packs*

### Aluminum Bus—Main Lugs Not Included—See Page V1-T4-94



| Socket Ampere Rating | Number of Meter Sockets | Bus Ampere Rating | Main Tenant Breaker Type (See Page V1-T4-94) | Catalog Number | Semi-Flush Flange Kit Catalog Number |
|---|---|---|---|---|---|
| **Ring Style Meter Socket Covers** ①② | | | | | |
| 125 ③ | 2 ⑤ | 200 | Plug-on type BR2_ BRH2_ BRHH2_ BRX2_ | **1MP2122R** ⑥⑨ | **1MPSFK1** |
| 125 ③ | 3 | 400 | | **1MP3124R** ⑦ | **1MPSFK2** |
| 125 ③ | 4 | 400 | | **1MP4124R** ⑦ | **1MPSFK2** |
| 125 ③ | 5 ⑤ | 600 | | **1MP5126R** ⑦ | **1MPSFK3** |
| 125 ③ | 6 ⑤ | 600 | | **1MP6126R** ⑦ | **1MPSFK3** |
| 200 ④ | 2 | 400 | Bolt-on type CCV2_X CCVH2_X CVS2_XMM CV2_XMM CVH2_XMM | **1MP2204R** ⑦ | **1MPSFK4** |
| 200 ④ | 3 | 600 | | **1MP3206R** ⑦ | **1MPSFK5** |
| 200 ④ | 4 | 600 | | **1MP4206R** ⑦ | **1MPSFK5** |
| 200 ④ | 5 | 600 | | **1MP5206R** ⑦ | **1MPSFK6** |
| 200 ④ | 6 | 600 | | **1MP6206R** ⑦ | **1MPSFK6** |
| **Ringless Style Meter Socket Covers** ⑧ | | | | | |
| 125 | 2 | 200 | Plug-on type BR2_ BRH2_ BRHH2_ BRX2_ | **1MP2122RRL** ⑥⑨ | **1MPSFK1** |
| 125 | 3 | 400 | | **1MP3124RRL** ⑦ | **1MPSFK2** |
| 125 | 4 | 400 | | **1MP4124RRL** ⑦ | **1MPSFK2** |
| 125 | 5 | 600 | | **1MP5126RRL** ⑦ | **1MPSFK3** |
| 125 | 6 | 600 | | **1MP6126RRL** ⑦ | **1MPSFK3** |
| 200 | 2 | 400 | Bolt-on type CCV2_X CCVH2_X CVS2_XMM CV2_XMM CVH2_XMM | **1MP2204RRL** ⑦ | **1MPSFK4** |
| 200 | 3 | 600 | | **1MP3206RRL** ⑦ | **1MPSFK5** |
| 200 | 4 | 600 | | **1MP4206RRL** ⑦ | **1MPSFK5** |
| 200 | 5 | 600 | | **1MP5206RRL** ⑦ | **1MPSFK6** |
| 200 | 6 | 600 | | **1MP6206RRL** ⑦ | **1MPSFK6** |
| **Ringless Style Covers with Horn Bypass** ⑧ | | | | | |
| 125 | 2 | 200 | Plug-on type BR2_ BRH2_ BRHH2_ BRX2_ | **1MP2122RRLB** ⑥⑨ | **1MPSFK1** |
| 125 | 3 | 400 | | **1MP3124RRLB** ⑦⑩ | **1MPSFK2** |
| 125 | 4 | 400 | | **1MP4124RRLB** ⑦⑩ | **1MPSFK2** |
| 125 | 5 | 600 | | **1MP5126RRLB** ⑦⑩ | **1MPSFK3** |
| 125 | 6 | 600 | | **1MP6126RRLB** ⑦⑩ | **1MPSFK3** |
| 200 | 2 | 400 | Bolt-on type CCV2_X CCVH2_X CVS2_XMM CV2_XMM CVH2_XMM | **1MP2204RRLB** ⑦⑩ | **1MPSFK4** |
| 200 | 3 | 600 | | **1MP3206RRLB** ⑦⑩ | **1MPSFK5** |
| 200 | 4 | 600 | | **1MP4206RRLB** ⑦⑩ | **1MPSFK5** |
| 200 | 5 | 600 | | **1MP5206RRLB** ⑦⑩ | **1MPSFK6** |
| 200 | 6 | 600 | | **1MP6206RRLB** ⑦⑩ | **1MPSFK6** |

***Notes***

① Ring Style Meter Packs do not come with fifth jaw. Order **1MM5JK** if needed.
② Reference drawing EUSERC DWG-342, G1.
③ To change in field from ring to ringless—order **1MMRC125**.
④ To change in field from ring to ringless—order **1MMRC200**.
⑤ To change from ring to ringless covers, the top socket only in 2, 5 and 6 socket designs—order **1MMRC125T**. Top socket only.
⑥ Main lugs included. #6–300 kcmil. (Optional lugs are not available.)
⑦ For overhead use, order DS_H2 type hub.
⑧ Fifth jaw factory installed at 9 o'clock position.
⑨ For overhead use, order DS type hub.
⑩ To order with raceway provision in bottom endwall, add "T" suffix to the catalog number. Trough accessory catalog number is **1008934CH**.

See **Page V1-T4-94** for Main Lug Kit selection and Wire Sizes.

## Copper Bus—Main Lugs Not Included—See Page V1-T4-94

| Socket Ampere Rating | Number of Meter Sockets | Bus Ampere Rating | Main Tenant Breaker Type (See Page V1-T4-94) | Catalog Number | Semi-Flush Flange Kit Catalog Number |
|---|---|---|---|---|---|
| **Ring Style Meter Socket Covers** ①② | | | | | |
| 125 ③ | 2 ⑤ | 200 | Plug-on type BR2_ BRH2_ BRHH2_ BRX2_ | **1MP2122RC** ⑦ | **1MPSFK1** |
| 125 ③ | 3 | 400 | | **1MP3124RC** ⑧ | **1MPSFK2** |
| 125 ③ | 4 | 400 | | **1MP4124RC** ⑧ | **1MPSFK2** |
| 125 ③ | 5 ⑤ | 600 | | **1MP5126RC** ⑧ | **1MPSFK3** |
| 125 ③ | 6 ⑤ | 600 | | **1MP6126RC** ⑧ | **1MPSFK3** |
| 200 ④ | 2 | 400 | Bolt-on type CCV2_X CCVH2_X CVS2_XMM CV2_XMM CVH2_XMM | **1MP2204RC** ⑧ | **1MPSFK4** |
| 200 ④ | 3 | 600 | | **1MP3206RC** ⑧ | **1MPSFK5** |
| 200 ④ | 4 | 600 | | **1MP4206RC** ⑧ | **1MPSFK5** |
| 200 ④ | 5 | 600 | | **1MP5206RC** ⑧ | **1MPSFK6** |
| 200 ④ | 6 | 600 | | **1MP6206RC** ⑧ | **1MPSFK6** |
| **Ringless Style Meter Socket Covers** ⑥ | | | | | |
| 125 | 2 | 200 | Plug-on type BR2_ BRH2_ BRHH2_ BRX2_ | **1MP2122RRLC** ⑧ | **1MPSFK1** |
| 125 | 3 | 400 | | **1MP3124RRLC** ⑧ | **1MPSFK2** |
| 125 | 4 | 400 | | **1MP4124RRLC** ⑧ | **1MPSFK2** |
| 125 | 5 | 600 | | **1MP5126RRLC** ⑧ | **1MPSFK3** |
| 125 | 6 | 600 | | **1MP6126RRLC** ⑧ | **1MPSFK3** |
| 200 | 2 | 400 | Bolt-on type CCV2_X CCVH2_X CVS2_XMM CV2_XMM CVH2_XMM | **1MP2204RRLC** ⑧ | **1MPSFK4** |
| 200 | 3 | 600 | | **1MP3206RRLC** ⑧ | **1MPSFK5** |
| 200 | 4 | 600 | | **1MP4206RRLC** ⑧ | **1MPSFK5** |
| 200 | 5 | 600 | | **1MP5206RRLC** ⑧ | **1MPSFK6** |
| 200 | 6 | 600 | | **1MP6206RRLC** ⑧ | **1MPSFK6** |
| **Ringless Style Covers with Horn Bypass** ⑥ | | | | | |
| 125 | 2 | 200 | Plug-on type BR2_ BRH2_ BRHH2_ BRX2_ | **1MP2122RRLBC** ⑧ | **1MPSFK1** |
| 125 | 3 | 400 | | **1MP3124RRLBC** ⑧ | **1MPSFK2** |
| 125 | 4 | 400 | | **1MP4124RRLBC** ⑧ | **1MPSFK2** |
| 125 | 5 | 600 | | **1MP5126RRLBC** ⑧ | **1MPSFK3** |
| 125 | 6 | 600 | | **1MP6126RRLBC** ⑧ | **1MPSFK3** |
| 200 | 2 | 400 | Bolt-on type CCV2_X CCVH2_X CVS2_XMM CV2_XMM CVH2_XMM | **1MP2204RRLBC** ⑧ | **1MPSFK4** |
| 200 | 3 | 600 | | **1MP3206RRLBC** ⑧ | **1MPSFK5** |
| 200 | 4 | 600 | | **1MP4206RRLBC** ⑧ | **1MPSFK5** |
| 200 | 5 | 600 | | **1MP5206RRLBC** ⑧ | **1MPSFK6** |
| 200 | 6 | 600 | | **1MP6206RRLBC** ⑧ | **1MPSFK6** |

***Notes***

① Ring Style Meter Packs do not come with fifth jaw. Order **1MM5JK** if needed.
② Reference drawing EUSERC DWG-342, G1.
③ To change in field from ring to ringless—order **1MMRC125**.
④ To change in field from ring to ringless—order **1MMRC200**.
⑤ To change in field from ring to ringless covers, the top socket only in 5 to 6 socket design—order **1MMRC125T**. Top socket only—other sockets see ③.
⑥ Fifth jaw factory installed at 9 o'clock position.
⑦ For overhead use, order DS_H2 type hub.
⑧ For overhead use, order DS_MH type hub.

**1MPLK3**

## Main Lug Selection—Field-Installed Lugs for 400 or 600 A Main Bus

| Line Lug and Wire Sizes Order Separately and Field Install | Line Lug Kit Catalog Number Order Three Kits (For Two Lines and Neutral) |
|---|---|
| (1) #6–600 kcmil or (2) 2/0–250 kcmil | **1MPLK1** |
| (2) 250–500 kcmil | **1MPLK3** |
| (3) #4–300 kcmil | **1MPLK4** ① |
| (1) 750 kcmil | **1MPLK2** ② |
| Crimp lug landing pad 250–750 kcmil | **1MPSC1** ① |

## Wire Sizes—Neutral and Ground Lugs

| Description | Wire Size, Al/Cu | Catalog Number |
|---|---|---|
| Neutral—125 A meter pack | #6–2/0 | — |
| Neutral—200 A meter pack | #1/0–300 kcmil | — |
| Equipment ground bar—125 A meter pack | #14–#2 | — |
| Equipment ground bar—200 A meter pack | #14–2/0 | — |
| Optional ground bar | #6–2/0 | **1MMGBK** |

***Notes***

① This kit comes with three pads for two lines and neutral. Each pad will accept one or two crimp lugs. Cannot be used on **1MP2122R**, **RL, RC** and **RLB** EUSERC underground termination.

② This lug is not UL listed.

Each stack includes a neutral and ground bar. If an extra ground bar is needed, order **1MMGBK**.

Type CCV Tenant Main Circuit Breaker

## Contents


| *Description* | *Page* |
|---|---|
| Systems for Residential and Commercial Applications | **V1-T4-88** |
| Meter Packs | **V1-T4-90** |
| Type CCV 120/240 V Tenant Main Circuit Breaker | |
| Type CV 120/240 V Tenant Main Circuit Breaker | **V1-T4-96** |
| Meter Packs—1MP, 1MM and 3MM Main Tenant Circuit Breakers | **V1-T4-98** |
| Main Service Modules | **V1-T4-101** |
| Surge Metering | **V1-T4-115** |
| Group Metering Inline Current Transformer Cabinets | **V1-T4-116** |
| Residential Meter Stacks | **V1-T4-118** |
| 1MP, 1MM and 3MM Main Tenant Circuit Breakers | **V1-T4-127** |
| Phase Balanced Stack | **V1-T4-128** |
| Commercial Meter Stack Modules | **V1-T4-129** |
| 35MM, 37MM, 35SS and 37SS Main Tenant Circuit Breakers | **V1-T4-136** |




## Type CCV 120/240 V Tenant Main Circuit Breaker

### Product Overview

Eaton offers Type CCV (10 and 22 kAIC) and Type CV (42, 65 and 100 kAIC) family of circuit breakers as the primary tenant main breakers used in most group metering applications.

### Product Description

Eaton's residential products Type CCV circuit breaker is available in two-pole configurations from 100 A to 225 A in 10 and 22 kAIC ratings.

### Features

- **Ratings**—120/240 Vac, two-pole, through 225 continuous amperes, calibrated at 40 °C
- **Tripping characteristics**—thermal-magnetic trip, calibrated and sealed after assembly. Indirectly heated thermal tripping bimetal elements
- **Interrupting capacity** at 120/240 Vac. Type CCV—10 kAIC rms symmetrical. Type CCVH—25 kAIC rms symmetrical
- **Handles**—trip-free with ON-TRIPPED-OFF positions. Reset past OFF is required to latch breaker contacts after tripping
- **Terminals**—standard lugs (wire connectors) suitable for copper or aluminum wire
- **Backward compatibility**—Type CCV and CCVH retains same profile and footprint as the CC and CCH breaker, allowing use in the same applications

### Standards and Certifications

- Complies with UL Standard 489. Breakers are listed under UL File #E7819

UL Listed

### Product Selection

#### Type CCV 120/240 V Tenant Main Circuit Breaker

| Ampere Rating | Two-Pole Breaker Wire Size Range, Al/Cu | 10 kAIC | 25 kAIC |
|---|---|---|---|
| 60 | #4–4/0 | **CCV2060X** | **CCVH2060X** |
| 70 | | **CCV2070X** | **CCVH2070X** |
| 80 | | **CCV2080X** | **CCVH2080X** |
| 90 | | **CCV2090X** | **CCVH2090X** |
| 100 | #2–300 kcmil | **CCV2100X** | **CCVH2100X** |
| 125 | | **CCV2125X** | **CCVH2125X** |
| 150 | | **CCV2150X** | **CCVH2150X** |
| 175 | | **CCV2175X** | **CCVH2175X** |
| 200 | | **CCV2200X** | **CCVH2200X** |
| 225 | | **CCV2225X** | **CCVH2225X** |

***Modification Codes***

- X—load side terminals only

**Type CV Tenant Main Circuit Breaker**

## Contents


| *Description* | *Page* |
|---|---|
| Systems for Residential and Commercial Applications | **V1-T4-88** |
| Meter Packs | **V1-T4-90** |
| Type CCV 120/240 V Tenant Main Circuit Breaker | **V1-T4-95** |
| Type CV 120/240 V Tenant Main Circuit Breaker | **V1-T4-96** |
| Meter Packs—1MP, 1MM and 3MM Main Tenant Circuit Breakers | **V1-T4-98** |
| Main Service Modules | **V1-T4-101** |
| Surge Metering | **V1-T4-115** |
| Group Metering Inline Current Transformer Cabinets | **V1-T4-116** |
| Residential Meter Stacks | **V1-T4-118** |
| 1MP, 1MM and 3MM Main Tenant Circuit Breakers | **V1-T4-127** |
| Phase Balanced Stack | **V1-T4-128** |
| Commercial Meter Stack Modules | **V1-T4-129** |
| 35MM, 37MM, 35SS and 37SS Main Tenant Circuit Breakers | **V1-T4-136** |


## Type CV 120/240 V Tenant Main Circuit Breaker

### Product Overview

Eaton offers Type CCV (10 and 22 kAIC) and Type CV (42, 65 and 100 kAIC) family of circuit breakers as the primary tenant main breakers used in most group metering applications.

### Product Description

Eaton's residential products Type CV molded-case circuit breaker is available in two- and three-pole configurations from 60 A to 225 A in 42, 65 and 100 kAIC ratings.

### Features

- **Ratings**—120/240 Vac, two- and three-pole, through 225 continuous amperes, calibrated at 40 °C
- **Tripping characteristics**—thermal-magnetic trip, calibrated and sealed after assembly. Indirectly heated thermal tripping bimetal elements; includes push-to-test button for routine preventive maintenance
- **Interrupting capacity** at 120/240 Vac
  - Type CVS—42,000 A rms symmetrical
  - Type CV—65,000 A rms symmetrical
  - Type CVH—100,000 A rms symmetrical
- **Handles**—trip-free with ON-TRIPPED-OFF positions. Reset past OFF is required to latch breaker contacts after tripping
- **Terminals**—standard lugs (wire connectors) suitable for copper or aluminum wire

### Standards and Certifications

- Complies with UL Standard 489. Breakers are listed under UL File #E7819

Listed

## Product Selection

### Type CV Two-Pole Tenant Main Circuit Breakers

| Number of Poles | Main Tenant Circuit Breaker Ampere Rating | Wire Size Range, Al/Cu | 42 kAIC Catalog Number | 65 kAIC Catalog Number | 100 kAIC Catalog Number |
|---|---|---|---|---|---|
| 2 | 60 | #6–4/0 | **CVS2060XMM** | **CV2060XMM** | **CVH2060XMM** |
| | 70 | | **CVS2070XMM** | **CV2070XMM** | **CVH2070XMM** |
| | 80 | | **CVS2080XMM** | **CV2080XMM** | **CVH2080XMM** |
| | 90 | | **CVS2090XMM** | **CV2090XMM** | **CVH2090XMM** |
| | 100 | | **CVS2100XMM** | **CV2100XMM** | **CVH2100XMM** |
| | 125 | | **CVS2125XMM** | **CV2125XMM** | **CVH2125XMM** |
| | 150 | | **CVS2150XMM** | **CV2150XMM** | **CVH2150XMM** |
| | 175 | | **CVS2175XMM** | **CV2175XMM** | **CVH2175XMM** |
| | 200 | | **CVS2200XMM** | **CV2200XMM** | **CVH2200XMM** |
| | 225 | | **CVS2225XMM** | **CV2225XMM** | **CVH2225XMM** |

### Type CV Three-Pole Tenant Main Circuit Breakers

| Number of Poles | Main Tenant Circuit Breaker Ampere Rating | Wire Size Range, Al/Cu | 42 kAIC Catalog Number | 65 kAIC Catalog Number | 100 kAIC Catalog Number |
|---|---|---|---|---|---|
| 3 | 60 | #6–4/0 | **CVS3060X** | **CV3060X** | **CVH3060X** |
| | 70 | | **CVS3070X** | **CV3070X** | **CVH3070X** |
| | 80 | | **CVS3080X** | **CV3080X** | **CVH3080X** |
| | 90 | | **CVS3090X** | **CV3090X** | **CVH3090X** |
| | 100 | | **CVS3100X** | **CV3100X** | **CVH3100X** |
| | 125 | | **CVS3125X** | **CV3125X** | **CVH3125X** |
| | 150 | | **CVS3150X** | **CV3150X** | **CVH3150X** |
| | 175 | | **CVS3175X** | **CV3175X** | **CVH3175X** |
| | 200 | | **CVS3200X** | **CV3200X** | **CVH3200X** |
| | 225 | | **CVS3225X** | **CV3225X** | **CVH3225X** |

## Accessories

Field Installable

| Description | Catalog Number |
|---|---|
| Two-pole 300 kcmil with terminal shield | **2TA225CVK** |
| Three-pole 300 kcmil with terminal shield | **3TA225CVK** |
| Replacement mounting hardware kit for 200 A 1MP, 1MM and 3MM units | **1MMCBK** |

**Main Tenant Circuit Breakers**

## Contents


| *Description* | *Page* |
|---|---|
| Systems for Residential and Commercial Applications | **V1-T4-88** |
| Meter Packs | **V1-T4-90** |
| Type CCV 120/240 V Tenant Main Circuit Breaker | **V1-T4-95** |
| Type CV 120/240 V Tenant Main Circuit Breaker | **V1-T4-96** |
| Meter Packs—1MP, 1MM and 3MM Main Tenant Circuit Breakers | |
| Main Service Modules | **V1-T4-101** |
| Surge Metering | **V1-T4-115** |
| Group Metering Inline Current Transformer Cabinets | **V1-T4-116** |
| Residential Meter Stacks | **V1-T4-118** |
| 1MP, 1MM and 3MM Main Tenant Circuit Breakers | **V1-T4-127** |
| Phase Balanced Stack | **V1-T4-128** |
| Commercial Meter Stack Modules | **V1-T4-129** |
| 35MM, 37MM, 35SS and 37SS Main Tenant Circuit Breakers | **V1-T4-136** |


## Meter Packs—1MP, 1MM and 3MM Main Tenant Circuit Breakers

### Product Description

Specific main tenant circuit breakers that are to be used in meter packs (1MP), residential meter stacks (1MM) and three-phase in single-phase out meter stacks (3MM).

### Product Selection

| Description | Number of Poles | Main Tenant Circuit Breaker Ampere Rating | 10 kAIC Catalog Number ① | 22 kAIC Catalog Number | 25 kAIC Catalog Number ①②③④ | 42 kAIC Catalog Number ②③④ | 65 kAIC Catalog Number ②③④ | 100 kAIC Catalog Number ②③④ |
|---|---|---|---|---|---|---|---|---|
| **Plug-On Type** | | | | | | | | |
| Plug-on type circuit breakers used with 1MP, 1MM, and 3MM 125 A modular metering stacks | 2 | 60 | **BR260** | **BRH260** | — | **BRHH260** | **BRX260** | — |
| | 2 | 70 | **BR270** | **BRH270** | — | **BRHH270** | **BRX270** | — |
| | 2 | 80 | **BR280** | **BRH280** | — | **BRHH280** | **BRX280** | — |
| | 2 | 90 | **BR290** | **BRH290** | — | **BRHH290** | **BRX290** | — |
| | 2 | 100 | **BR2100** | **BRH2100** | — | **BRHH2100** | **BRX2100** | — |
| | 2 | 110 | **BR2110** | **BRH2110** | — | **BRHH2110** | **BRX2110** | — |
| | 2 | 125 | **BR2125** | **BRH2125** | — | **BRHH2125** | **BRX2125** | — |
| **Bolt-On Type** | | | | | | | | |
| Bolt-on type circuit breakers used with 1MP, 1MM, and 3MM 200 A modular metering stacks | 2 | 60 | **CCV2060X** | — | **CCVH2060X** | **CVS2060XMM** | **CV2060XMM** | **CVH2060XMM** |
| | 2 | 70 | **CCV2070X** | — | **CCVH2070X** | **CVS2070XMM** | **CV2070XMM** | **CVH2070XMM** |
| | 2 | 80 | **CCV2080X** | — | **CCVH2080X** | **CVS2080XMM** | **CV2080XMM** | **CVH2080XMM** |
| | 2 | 90 | **CCV2090X** | — | **CCVH2090X** | **CVS2090XMM** | **CV2090XMM** | **CVH2090XMM** |
| | 2 | 100 | **CCV2100X** | — | **CCVH2100X** | **CVS2100XMM** | **CV2100XMM** | **CVH2100XMM** |
| | 2 | 125 | **CCV2125X** | — | **CCVH2125X** | **CVS2125XMM** | **CV2125XMM** | **CVH2125XMM** |
| | 2 | 150 | **CCV2150X** | — | **CCVH2150X** | **CVS2150XMM** | **CV2150XMM** | **CVH2150XMM** |
| | 2 | 175 | **CCV2175X** | — | **CCVH2175X** | **CVS2175XMM** | **CV2175XMM** | **CVH2175XMM** |
| | 2 | 200 | **CCV2200X** | — | **CCVH2200X** | **CVS2200XMM** | **CV2200XMM** | **CVH2200XMM** |

***Notes***

① #2–300 kcmil wire size range for CCV and CCVH tenant main circuit breakers.
② "MM" suffix indicates mounting hardware kit is included as standard with tenant main breaker.
③ 1MMCBK replacement mounting hardware kit. One kit is needed per breaker. Mounting hardware kit ships standard with breaker "MM" suffix offering.
④ #6–4/0 kcmil wire size range for CVS, CV and CVH tenant main circuit breakers. If #2–300 kcmil is needed, order 2TA225CVK. One kit needed per breaker.

## Dimensions and Knockouts

Approximate Dimensions in Inches (mm)

### 1MP, 125 Ampere Meter Packs—Aluminum and Copper Bus

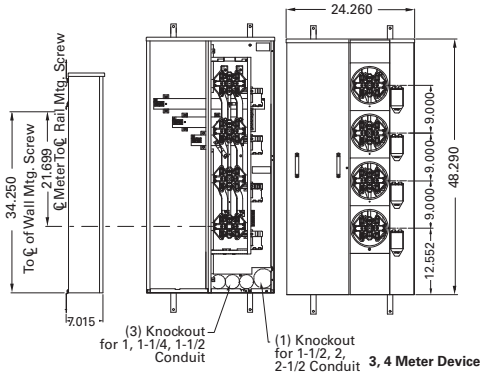


**3, 4 Meter Device**

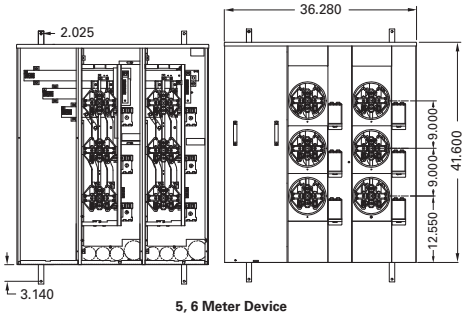


**5, 6 Meter Device**

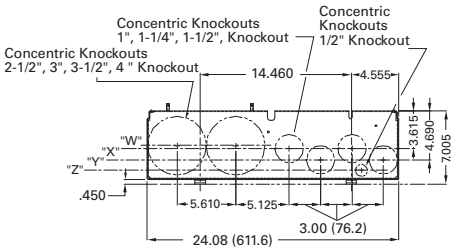


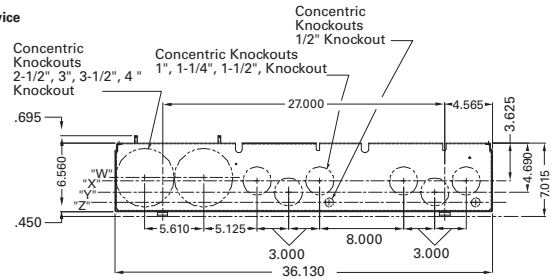


"Z" = ℄ of 1/2" Ring
"Y" = ℄ of 1-1/2" Ring
"X" = ℄ of 1-1/2" Ring
"W" = ℄ of 4" Ring

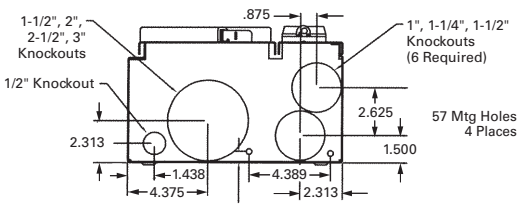


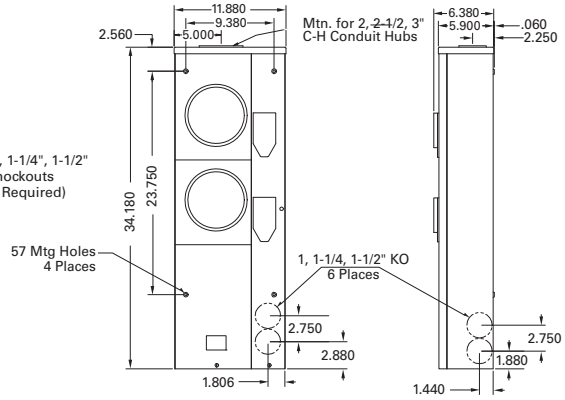


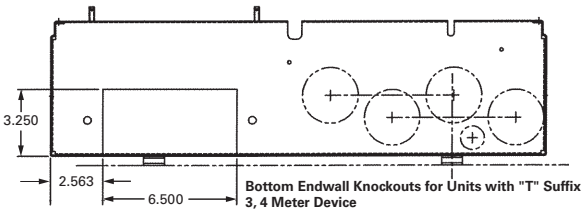


**Bottom Endwall Knockouts for Units with "T" Suffix 3, 4 Meter Device**

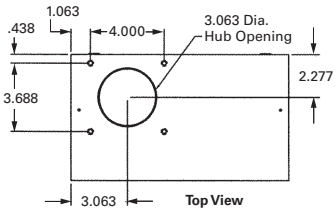


**Top View**

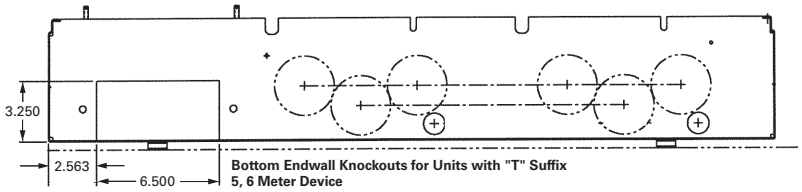


**Bottom Endwall Knockouts for Units with "T" Suffix 5, 6 Meter Device**

4

Approximate Dimensions in Inches (mm)

## 1MP, 200 Ampere Meter Packs—Aluminum and Copper Bus

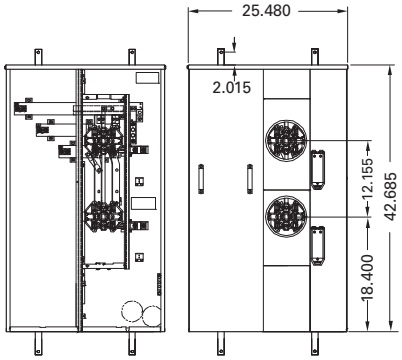


2 Meter Device

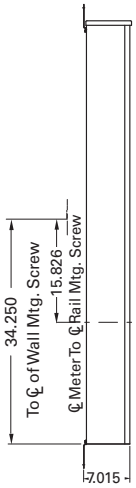


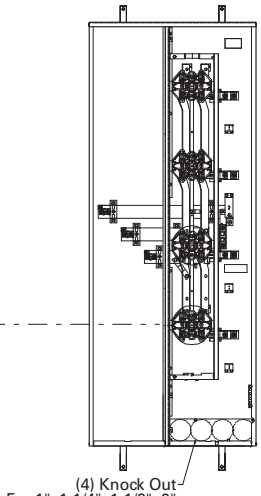


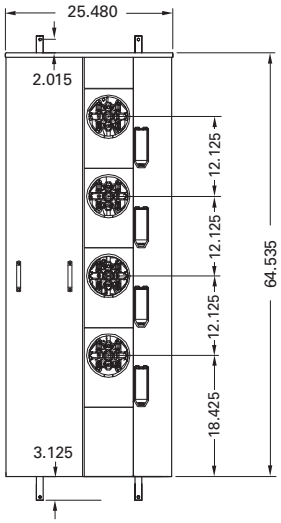


3, 4 Meter Device

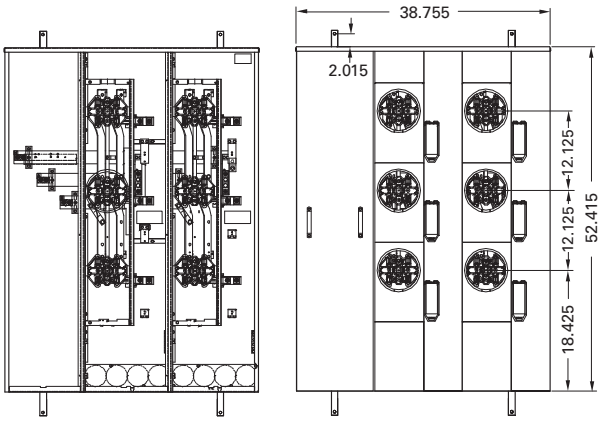


5, 6 Meter Device

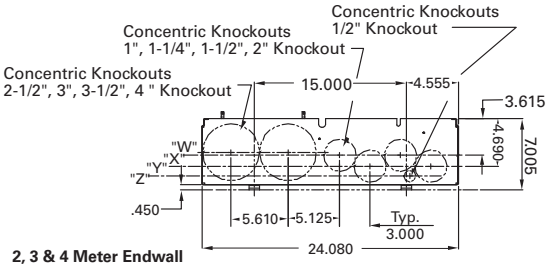


2, 3 & 4 Meter Endwall

"Z" = ℄ of 1/2" Ring
"Y" = ℄ of 1-1/2" Ring
"X" = ℄ of 1-1/2" Ring
"W" = ℄ of 4" Ring

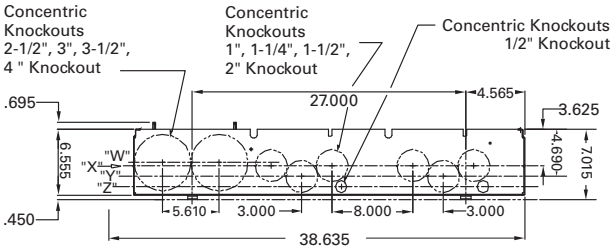


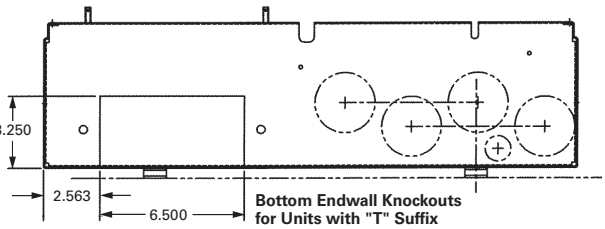


Bottom Endwall Knockouts
for Units with "T" Suffix
2, 3, 4 Meter Device

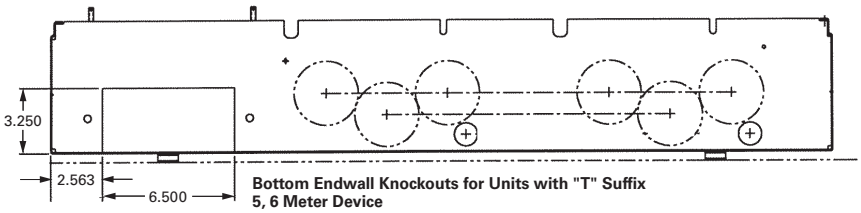


Bottom Endwall Knockouts for Units with "T" Suffix
5, 6 Meter Device

## Contents

| Description | Page |
|---|---|
| Systems for Residential and Commercial Applications | V1-T4-88 |
| Meter Packs | V1-T4-90 |
| Type CCV 120/240 V Tenant Main Circuit Breaker | V1-T4-95 |
| Type CV 120/240 V Tenant Main Circuit Breaker | V1-T4-96 |
| Meter Packs—1MP, 1MM and 3MM Main Tenant Circuit Breakers | V1-T4-98 |
| Main Service Modules | |
| Surge Metering | V1-T4-115 |
| Group Metering Inline Current Transformer Cabinets | V1-T4-116 |
| Residential Meter Stacks | V1-T4-118 |
| 1MP, 1MM and 3MM Main Tenant Circuit Breakers | V1-T4-127 |
| Phase Balanced Stack | V1-T4-128 |
| Commercial Meter Stack Modules | V1-T4-129 |
| 35MM, 37MM, 35SS and 37SS Main Tenant Circuit Breakers | V1-T4-136 |



## Main Service Modules

### Product Description

- Main terminal box
- Main circuit breaker
- Main bolted pressure switch
- Main fusible switch
- Main fusible switch with pull box
- Underground pull box

### Application Description

***Main Circuit Breakers with Busway Connections***

The Service Entrance Product Team announces the availability of both main fusible switch and main circuit breaker group metering mains with busway connections. This offering provides us with the ability to offer multiple tenant metering in high rise apartment buildings where riser busway is used.

### Features, Benefits and Functions

***Eaton's Main Service Module***

- Offering: main terminal/lug compartment, main circuit breaker, main fusible switch, main bolted pressure switch, main fusible switch with pull box (meets EUSERC electrical requirements), underground pull box termination compartment without cross bus (meets EUSERC electrical requirements)
- Mechanically and electrically built for use with 1MM, 3MM, 35MM, 37MM, 35SS and 37SS modular metering stacks
- For integrated system short-circuit ratings with main devices, see series ratings on **Page V1-T4-144**
- All main service modules include both left and right horizontal bus closure plates
- Two-pole devices are applied to single-phase, three-wire, 120/240 V or 208Y/120 V systems, three-pole devices to 208Y/240 V or 120/240 V delta systems
- Single-phase mains couple to any modular metering stack (1MM, 3MM, 35MM, 37MM, 35SS and 37SS)
- Three-phase mains require three-phase bussed stacks. These modular metering stacks are 3MM, 35MM, 37MM, 35SS and 37SS
- If the ampere rating of the main service module is greater than the horizontal bus rating of the meter stack (residential or commercial), the main service module must be center fed. Examples: 1200 A Main Circuit Breaker (**1MCB1200R**) with an 800 A residential stack (**1MM512R**). 1600 A Main Terminal Box (**3MTB1600R**) with a 1200 A residential stack (**3MM212R12**)
- Most main service modules are available with aluminum or copper bus

***Main Circuit Breakers with Busway Connections***

- Three-phase, 400–200 A main circuit breakers
- Three-phase, 400–800 A main fusible switches
- Simple bridge joint connection
- Variety of options:
  - Right or left mounting
  - Internal ground or housing ground
- The MFS/MCB and busway connector are supplied completely assembled

## Catalog Number Selection

**3 MTB 400 R __ C**

**Phase**
- **1** = Single-phase
- **3** = Three-phase

**Type of Metering**
- **BTB** = Main terminal box
- **MCB** = Main circuit breaker
- **BPS** = Bolted pressure switch
- **MFS** = Main fusible switch
- **UGPB** = Underground pull box
- **MTBE** = Main terminal box with utility pull box
- **MCBE** = Main circuit breaker with utility pull box

**Ampere Rating**
- **400 A**
- **600 A**
- **800 A**
- **1000 A**
- **1200 A**
- **1400 A**
- **1600 A**
- **2000 A**

**Enclosure**
- **R** = NEMA 3R

**Accessories and Additional Options**
- **BLK** = Box lug kit (accessory)
- **CLK** = Compression lug (accessory)
- **B** = Bottom feed
- **T** = Top feed
- **UG** = Pull box
- **Blank** = No options

**Bus Material**
- **C** = Copper bus
- **Blank** = Aluminum bus

### When Ordering:

1. Determine catalog number of Main Service Module.
2. Determine catalog number of Meter Stack (Residential or Commercial).
3. Find quantity and catalog numbers for tenant circuit breakers (found on **Page V1-T4-127** or **V1-T4-137**). Order one breaker per socket.
4. If any accessories are needed, order from **Pages V1-T4-138** and **V1-T4-139**.

## Product Selection

### *Main Terminal Box*

- Phase and neutral lugs are included
- Top or bottom feed:
  - For top feed, use Myer type hub
- Indoor or outdoor
- Terminal box UL listed short-circuit rating is the least AIC rating of any installed main tenant breaker—to a maximum of 100,000 rms symmetrical amperes

**Main Terminal Box**

### Main Terminal Box

| Ampere Rating | Line Side Lug and Wire Sizes—Included | System Voltage 120/240 Vac Single-Phase, Three-Wire Catalog Number | 120/208 Vac Three-Phase, Four-Wire Catalog Number |
|---|---|---|---|
| **Aluminum Bus (Standard Offering)** | | | |
| 400 | (1) #6–600 or (2) 1/0–250 kcmil ② | Use three-phase | **3MTB400R** |
| 600 | (2) 250–500 kcmil ③ | Use three-phase | **3MTB600R** |
| 800 | (4) 250–500 kcmil ④⑤ | **1MTB800R** | **3MTB800R** |
| 1200 ① | (4) 250–500 kcmil ⑤⑥ | **1MTB1200R** | **3MTB1200R** |
| **Aluminum Bus (EUSERC)** | | | |
| 400 | Crimp lug landing pads (no lugs included) | **1MTBE400R** ⑦ | **3MTBE400R** ⑦ |
| 800 | Crimp lug landing pads (no lugs included) | **1MTBE800R** ⑦ | **3MTBE800R** ⑦ |
| **Copper Bus (Premium Offering)** | | | |
| 400 | (1) #6–600 or (2) 1/0–250 kcmil ② | Use three-phase | **3MTB400RC** |
| 600 | (2) 250–500 kcmil ③ | Use three-phase | **3MTB600RC** |
| 800 | (4) 250–500 kcmil ④⑤ | **1MTB800RC** | **3MTB800RC** |
| 1200 ① | (4) 250–500 kcmil ⑤⑥ | **1MTB1200RC** | **3MTB1200RC** |
| 1600 ① | (6) 500 kcmil ⑧ | **1MTB1600RC** | **3MTB1600RC** |

### *Main Terminal Box Riser Panel*

Eaton's Main Terminal Box Riser Panel is a main terminal box with offset lugs on each phase to allow riser cables to pass through the main service module.

These panels are used in the construction of assisted living homes, dormitories, public housing complexes and apartments.

### Main Terminal Box Riser Panel

| Ampere Rating | Line and Load Side Lug and Wire Sizes Included | System Voltage 120/240 Vac Single-Phase, Three-Wire Catalog Number | 120/208 Vac Three-Phase, Four-Wire Catalog Number |
|---|---|---|---|
| **Copper Bus (Standard Offering)** | | | |
| 1200 | #2 AWG–750 kcmil ①⑨ | Use three-phase | **3MTB1200RCRIS** |
| 1600 | #2 AWG–750 kcmil ①⑨ | Use three-phase | **3MTB1600RCRIS** |

***Notes***

① 1200 A main devices must be center fed when installing 800 A residential meter stacks.
1600 A main devices must be center fed when installing 800–1200 A residential and commercial meter stacks.

② For 400 A units, to obtain (4) 750 kcmil cables per phase—order quantity 4 **1MPLK2**. Kit contains one lug.

③ For compression lug landing kits for 600 A units, order **3MTB600CLK**. Kit includes lug landings for three phases and neutral.

④ For 800 A units, to obtain (4) 1/0–300 kcmil or (2) 1/0–750 kcmil cables per phase—order catalog number **3MTB800BLK**, one lug kit per main terminal box ordered (neutral and ground included in kit).

⑤ For 800 A and 1200 A units, for compression lug landing kits, order **3MTB1200CLK**. Kit includes lug landings for three-phase and neutral.

⑥ For 1200 A units, to obtain (6) 1/0–300 kcmil or (3) 750 kcmil cables per phase—order catalog number **3MTB1200BLK**, one lug kit per main terminal box ordered (neutral and ground included in kit).

⑦ Meets EUSERC electrical requirements and eliminates the need to add additional pull box section. Reference drawing EUSERC DWG-343.

⑧ For 1600 A units, to obtain (4) 750 kcmil cables per phase—order catalog number **3MTB1600BLK**, one lug kit per main terminal box ordered. For a 1600 A compression lug landing kit, order catalog number **3MTB1600CLK**.

⑨ Quantity (10) lugs per phase—quantity (5) lugs incoming and quantity (5) lugs outgoing per phase.

***Main Circuit Breaker***

- Phase and neutral lugs included. If additional neutral lugs are needed, order 1MCB1200NLK for (3) 1/0–750 or (6) 1/0–300 kcmil
- For shunt trip mains, order the field-installable shunt trip kit in this volume, Tab 1, section 1.1
- For overhead feed, use Myer type hub. Verify local utility approval
- For compression lugs on 400, 600, 800, 1000 and 1200 A units, add CL to the end of the part number (includes copper lug pads for lines and neutral)
- 1200 A or greater main devices must be center fed when installing 800 A residential meter stacks
- 1400, 1600 and 2000 A main devices must be center fed when installing 800 and 1200 A residential and commercial meter stacks

**Main Circuit Breaker**

## Main Circuit Breaker

| Main Ampere Rating | Main Circuit Breaker Type | Feed | kAIC | Line Side Lug and Wire Sizes (Lugs Included with Main Breaker) ① | System Voltage 120/240 Vac Single-Phase, Three-Wire Catalog Number | System Voltage 120/208 Vac Three-Phase, Four-Wire Catalog Number |
|---|---|---|---|---|---|---|
| **Aluminum Bus (Standard Offering) ②** | | | | | | |
| 250 | KD | Bottom/top | 65 | (2) 3/0–250 kcmil or (1) 2/0–500 kcmil | **1MCB250R** | **3MCB250R** |
| 250 | HKD | Bottom/top | 100 | (2) 3/0–250 kcmil or (1) 2/0–500 kcmil | **1MHCB250R** | **3MHCB250R** |
| 300 | KD | Bottom/top | 65 | (2) 3/0–250 kcmil or (1) 2/0–500 kcmil | **1MCB300R** | **3MCB300R** |
| 300 | HKD | Bottom/top | 100 | (2) 3/0–250 kcmil or (1) 2/0–500 kcmil | **1MHCB300R** | **3MHCB300R** |
| 350 | KD | Bottom/top | 65 | (2) 3/0–250 kcmil or (1) 2/0–500 kcmil | **1MCB350R** | **3MCB350R** |
| 350 | HKD | Bottom/top | 100 | (2) 3/0–250 kcmil or (1) 2/0–500 kcmil | **1MHCB350R** | **3MHCB350R** |
| 400 | KD | Bottom/top | 65 | (2) 3/0–250 kcmil or (1) 2/0–500 kcmil | **1MCB400R** ③ | **3MCB400R** ③ |
| 400 | HKD | Bottom/top | 100 | (2) 3/0–250 kcmil or (1) 2/0–500 kcmil | **1MHCB400R** ③ | **3MHCB400R** ③ |
| 500 | LD | Bottom/top | 65 | (2) 400–500 kcmil | **1MCB500R** | **3MCB500R** |
| 500 | HLD | Bottom/top | 100 | (2) 400–500 kcmil | **1MHCB500R** | **3MHCB500R** |
| 600 | LD | Bottom/top | 65 | (2) 400–500 kcmil | **1MCB600R** ③ | **3MCB600R** ③ |
| 600 | HLD | Bottom/top | 100 | (2) 400–500 kcmil | **1MHCB600R** ③ | **3MHCB600R** ③ |
| 700 | HMDL | Bottom/top | 100 | (3) 3/0–400 kcmil | **1MHCB700R** | **3MHCB700R** |
| 700 | MDL | Bottom/top | 65 | (3) 3/0–400 kcmil | **1MCB700R** | **3MCB700R** |
| 800 | MDL | Bottom/top | 65 | (3) 3/0–400 kcmil | **1MCB800R** ③ | **3MCB800R** ③ |
| 800 | MDL | Bottom/top | 65 | (2) 500–750 kcmil | **1MCB800R750** | **3MCB800R750** |
| 800 | HMDL | Bottom/top | 100 | (3) 3/0–400 kcmil | **1MHCB800R** ③ | **3MHCB800R** ③ |
| 900 | NGS | Bottom/top | 65 | (4) 4/0–500 kcmil ④ | **1MCB900R** ⑤ | **3MCB900R** ⑤ |
| 900 | NGH | Bottom/top | 100 | (4) 4/0–500 kcmil ④ | **1MHCB900R** ⑤ | **3MHCB900R** ⑤ |
| 1000 | NGS | Bottom/top | 65 | (4) 4/0–500 kcmil ④ | **1MCB1000R** ③⑤ | **3MCB1000R** ③⑤ |
| 1000 | NGS | Bottom/top | 65 | (2) 500–750 kcmil | **1MCB1000R750** | **3MCB1000R750** |
| 1000 | NGH | Bottom/top | 100 | (4) 4/0–500 kcmil ④ | **1MHCB1000R** ③⑤ | **3MHCB1000R** ③⑤ |
| 1200 | NGS | Bottom | 65 | (4) 4/0–500 kcmil ④ | **1MCB1200R** ③⑤ | **3MCB1200R** ③⑤ |
| 1200 | NGH | Bottom | 100 | (4) 4/0–500 kcmil ④ | **1MHCB1200R** ③⑤ | **3MHCB1200R** ③⑤ |
| 1200 | NGS | Bottom | 65 | (2) 500–750 kcmil | Use three-phase | **3MCB1200R750** |

***Notes***

① If additional neutral lugs are needed, order **1MCB1200NLK** [(3) 1/0–750 kcmil or (6) 1/0–300 kcmil].
② Reference drawing EUSERC DWG-315.
③ Add CL to end of catalog number for compression lug pads (includes lug pads for lines and neutral).
④ If (3) 500–750 kcmil are needed, order **TA1201NB1**. Order one kit per pole.
⑤ Main devices with a rating greater than 800 A can be used with 800 A residential modular stacks, but only as a center fed main.

*Main Circuit Breaker*

Main Circuit Breaker

## Main Circuit Breaker, continued

| Main Ampere Rating | Main Circuit Breaker Type | Feed | kAIC | Line Side Lug and Wire Sizes (Lugs Included with Main Breaker) ① | System Voltage 120/240 Vac Single-Phase, Three-Wire Catalog Number | 120/208 Vac Three-Phase, Four-Wire Catalog Number |
|---|---|---|---|---|---|---|
| **Aluminum Bus (EUSERC) ②** | | | | | | |
| 300 | KD | Bottom/top | 65 | Crimp lug landing pads (no lugs included) | **1MCBE300R** | **3MCBE300R** |
| 350 | KD | Bottom/top | 65 | Crimp lug landing pads (no lugs included) | **1MCBE350R** | **3MCBE350R** |
| 400 | KD | Bottom/top | 65 | Crimp lug landing pads (no lugs included) | **1MCBE400R** | **3MCBE400R** |
| 400 | HKD | Bottom/top | 100 | Crimp lug landing pads (no lugs included) | **1MHCBE400R** | **3MHCBE400R** |
| 500 | LD | Bottom/top | 65 | Crimp lug landing pads (no lugs included) | **1MCBE500R** | **3MCBE500R** |
| 600 | LD | Bottom/top | 65 | Crimp lug landing pads (no lugs included) | **1MCBE600R** | **3MCBE600R** |
| 600 | HLD | Bottom/top | 100 | Crimp lug landing pads (no lugs included) | **1MHCBE600R** | **3MHCBE600R** |
| 800 | MDL | Bottom/top | 65 | Crimp lug landing pads (no lugs included) | **1MCBE800R** | **3MCBE800R** |
| 800 | HMDL | Bottom/top | 100 | Crimp lug landing pads (no lugs included) | **1MHCBE800R** | **3MHCBE800R** |
| 1000 | NGS | Bottom/top | 65 | Crimp lug landing pads (no lugs included) | **1MCBE1000R** | **3MCBE1000R** |
| 1200 | NGS | Bottom | 65 | Crimp lug landing pads (no lugs included) | **1MCBE1200R** | **3MCBE1200R** |
| 1200 | NGH | Bottom | 100 | Crimp lug landing pads (no lugs included) | **1MHCBE1200R** | **3MHCBE1200R** |
| **Copper Bus (Premium Offering)** | | | | | | |
| 400 | KD | Bottom/top | 65 | (2) 3/0–250 kcmil or (1) 2/0-500 kcmil | **1MCB400RC** ③ | **3MCB400RC** ③ |
| 400 | HKD | Bottom/top | 100 | 2/0–500 kcmil | **1MHCB400RC** ③ | **3MHCB400RC** ③ |
| 600 | LD | Bottom/top | 65 | (2) 300–500 kcmil | **1MCB600RC** ③ | **3MCB600RC** ③ |
| 600 | HLD | Bottom/top | 100 | (2) 300–500 kcmil | **1MHCB600RC** ③ | **3MHCB600RC** ③ |
| 800 | MDL | Bottom/top | 65 | (3) 3/0–400 kcmil | **1MCB800RC** ③ | **3MCB800RC** ③ |
| 800 | HMDL | Bottom/top | 100 | (3) 3/0–400 kcmil | **1MHCB800RC** ③ | **3MHCB800RC** ③ |
| 900 | NGS | Bottom/top | 65 | (4) 4/0–500 kcmil ④ | **1MCB900RC** ⑤ | **3MCB900RC** ⑤ |
| 900 | NGH | Bottom/top | 100 | (4) 4/0–500 kcmil ④ | **1MHCB900RC** ⑤ | **3MHCB900RC** ⑤ |
| 1000 | NGS | Bottom/top | 65 | (2) 500–750 kcmil | **1MCB1000R750C** | **3MCB1000R750C** |
| 1000 | NGS | Bottom/top | 65 | (4) 4/0–500 kcmil ④ | **1MCB1000RC** ③⑤ | **3MCB1000RC** ③⑤ |
| 1000 | NGH | Bottom/top | 100 | (4) 4/0–500 kcmil ④ | **1MHCB1000RC** ③⑤ | **3MHCB1000RC** ③⑤ |
| 1200 | NGS | Bottom | 65 | (2) 500–750 kcmil | Use three-phase | **3MCB1200R750C** |
| 1200 | NGS | Bottom | 65 | (4) 4/0–500 kcmil ④ | **1MCB1200RC** ③⑤ | **3MCB1200RC** ③⑤ |
| 1200 | NGH | Bottom | 100 | (4) 4/0–500 kcmil ④ | **1MHCB1200RC** ③⑤ | **3MHCB1200RC** ③⑤ |
| 1400 | RGH | Bottom | 100 | (4) 500–1000 kcmil ⑥ | **1MCB1400RBC** ⑤⑦ | **3MCB1400RBC** ⑤⑦ |
| 1400 | RGH | Top | 100 | (4) 500–1000 kcmil ⑥ | **1MCB1400RT** ⑧ | **3MCB1400RT** ⑧ |
| 1600 | RGH | Bottom | 100 | (4) 500–1000 kcmil ⑥ | **1MCB1600RBC** ⑦⑧ | **3MCB1600RBC** ⑦⑧ |
| 1600 | RGH | Top | 100 | (4) 500–1000 kcmil ⑥ | **1MCB1600RT** ⑧ | **3MCB1600RT** ⑧ |
| 2000 | RGH | Bottom | 100 | (6) #2–600 kcmil | **1MCB2000RBC** ⑦⑨ | **3MCB2000RBC** ⑦⑨ |
| 2000 | RGH | Top | 100 | (6) #2–600 kcmil | **1MCB2000RT** ⑨ | **3MCB2000RT** ⑨ |
| **Copper Bus (EUSERC) ②** | | | | | | |
| 1000 | NGH | Bottom | 100 | Crimp lug landing pads (no lugs included) | **1MCBE1000RC** | **3MCBE1000RC** |
| 1200 | NGS | Bottom | 65 | Crimp lug landing pads (no lugs included) | **1MCBE1200RC** | **3MCBE1200RC** |
| 1200 | NGH | Bottom | 100 | Crimp lug landing pads (no lugs included) | **1MHCBE1200RC** | **3MHCBE1200RC** |

***Notes***

① If additional neutral lugs are needed, order **1MCB1200NLK** [(3) 1/0–750 kcmil or (6) 1/0–300 kcmil].
② Reference drawing EUSERC DWG-315.
③ Add CL to end of catalog number for compression lug pads (includes lug pads for lines and neutral).
④ If (3) 500–750 kcmil are needed, order **TA1201NB1**. Order one kit per pole.
⑤ Main devices with a rating greater than 800 A can be used with 800 A residential modular stacks but only as a center fed main.
⑥ If (6) #2–600 kcmil lugs are needed, order **TA2000RD**. Catalog number includes terminals and hardware for three poles. If neutral is needed, order **TA2000N**.
⑦ Copper bus.
⑧ Main devices with a rating greater than 1200 A can be used with residential and commercial modular metering stacks but only as a center fed main.
⑨ Only to be used in center feed applications with 1200 A meter stacks. Not to be used with 800 A stacks.

***Main Fusible Switches***

- Fuses not included
- Main lugs and neutral included with device
- 100 kAIC rating on switches with Class T fuses installed. If converting to Class H, the kAIC rating is 10 and if converted to Class R, the kAIC rating is 200

**Note:** This is the fuse rating, switch still rated at 100 kAIC.

- 800 A top and bottom fed units are supplied with Class T fuse clips as standard. The Class T fuse clips are field convertible to Class L by repositioning. No kit is needed
- Barrier kits available for 400–800 A fusible switches: Bottom feed—**3MFSBBK**, Top feed—**3MFSTBK**

**Main Fusible Switches**

## Main Fusible Switches

| Ampere Rating | Feed | Class Fuse Clips (Fuses Not Included) | Line Side Box Lugs and Wire Sizes (Included with Switch) | System Voltage 120/240 Vac Single-Phase, Three-Wire Catalog Number | 120/208 Vac Three-Phase, Four-Wire Catalog Number |
|---|---|---|---|---|---|
| **Aluminum Bus (Standard Offering)** | | | | | |
| 400 | Bottom | T ① | (2) 1/0–300 kcmil or (1) 750 kcmil ④⑤ | **1MFS400RB** | **3MFS400RB** |
| 400 | Top | T ① | (2) 1/0–300 kcmil or (1) 750 kcmil ⑤⑥ | **1MFS400RT** | **3MFS400RT** |
| 600 | Bottom | T ② | (2) #2–600 kcmil ④⑤ | **1MFS600RB** | **3MFS600RB** |
| 600 | Top | T ② | (2) #2–600 kcmil ⑤⑥ | **1MFS600RT** | **3MFS600RT** |
| 800 | Bottom | T, L ③ | (4) 3/0–750 kcmil ④ | **1MFS800RB** | **3MFS800RB** |
| 800 | Top | T, L ③ | (4) 3/0–750 kcmil ⑥ | **1MFS800RT** | **3MFS800RT** |
| 1200 | Bottom | T, L ③ | (4) #2–600 kcmil ⑦ | **1MFS1200RB** | **3MFS1200RB** |
| **Copper Bus (Premium Offering)** | | | | | |
| 400 | Bottom | T ① | (2) 1/0–300 kcmil or (1) 750 kcmil ④⑤ | **1MFS400RBC** | **3MFS400RBC** |
| 400 | Top | T ① | (2) 1/0–300 kcmil or (1) 750 kcmil ⑤⑥ | **1MFS400RTC** | **3MFS400RTC** |
| 600 | Bottom | T ② | (2) #2–600 kcmil ④⑤ | **1MFS600RBC** | **3MFS600RBC** |
| 600 | Top | T ② | (2) #2–600 kcmil ⑤⑥ | **1MFS600RTC** | **3MFS600RTC** |
| 800 | Bottom | T, L ③ | (4) 3/0–750 kcmil ④ | **1MFS800RBC** | **3MFS800RBC** |
| 800 | Top | T, L ③ | (4) 3/0–750 kcmil ⑥ | **1MFS800RTC** | **3MFS800RTC** |
| 1200 | Bottom | T, L ③ | (4) #2–600 kcmil ⑦ | **1MFS1200RBC** | **3MFS1200RBC** |

***Notes***

① If Class H fuse clips are needed, use catalog number **WCG3HK400** (order (1) per phase).
If Class R fuse clips are needed, order catalog number **DS56FK** in addition to **WCG3HK400**.
In order to go from T to R, the device must first be converted to H.
All kits are field installable and each **DS56FK** kit will convert three poles.

② If Class H fuse clips are needed, use catalog number **WCG3HK600** (order (1) per phase).
If Class R fuse clips are needed, order catalog number **DS66FK** in addition to **WCG3HK600**.
In order to go from T to R, the device must first be converted to H.
All kits are field installable and each **DS66FK** kit will convert three poles.

③ Class T fuse clips provided are field convertible to Class L by repositioning. No kit is needed.

④ If compression lugs are being used, order **3MFS800CLK**. This compression lug kit includes four pads (three poles and neutral).

⑤ 1MFS600BLK (4) 3/0–750 kcmil/phase (one kit/phase and one kit/neutral).

⑥ If compression lugs are being used, order **3MFS800CLKT**. This compression lug kit includes four pads (three poles and neutral).

⑦ IMFS1200LK (3) 750 kcmil/phase (one kit/phase). IMFS1200LKN (3) 750 kcmil (neutral).

***Main Fusible Switch with Utility Pull Box***

- Fuses not included
- Includes lug landing pads on line side and neutral
- Spacer kit 3MMBSK required when stacks are mounted on right-hand side in EUSERC areas
- 100 kAIC rating on switches with Class T fuse clips installed

**Main Fusible Switch with Utility Pull Box**

## Main Fusible Switch with Utility Pull Box ①

| Ampere Rating | Feed | Class Fuse Clips (Fuses Not Included) | Line Side Box Lugs and Wire Sizes (Included with Switch) | System Voltage 120/240 Vac Single-Phase, Three-Wire Catalog Number | System Voltage 120/208 Vac Three-Phase, Four-Wire Catalog Number |
|---|---|---|---|---|---|
| **Aluminum Bus (Standard Offering)** | | | | | |
| 400 | Bottom | T | ② | **1MFS400RUG** | **3MFS400RUG** |
| 600 | Bottom | T | ② | **1MFS600RUG** | **3MFS600RUG** |
| 800 | Bottom | T, L | ② | **1MFS800RUG** | **3MFS800RUG** |
| 1200 | Bottom | T | ② | **1MFS1200RUG** | **3MFS1200RUG** |
| **Copper Bus (Premium Offering)** | | | | | |
| 400 | Bottom | T | ② | **1MFS400RUGC** | **3MFS400RUGC** |
| 600 | Bottom | T | ② | **1MFS600RUGC** | **3MFS600RUGC** |
| 800 | Bottom | T, L | ② | **1MFS800RUGC** | **3MFS800RUGC** |
| 1200 | Bottom | T | ② | **1MFS1200RUGC** | **3MFS1200RUGC** |

***Utility Pull Box***

- Includes lug landing pads on line side and neutral
- Requires cable connection in field to main device; does not include horizontal cross bus

## Pull Box ③

| Ampere Rating | Feed | Line Side Lug Information | Load Side Lug Information for Cable Connection to Main Disconnect | System Voltage 120/240 Vac Single-Phase, Three-Wire Catalog Number | System Voltage 120/208 Vac Three-Phase, Four-Wire Catalog Number |
|---|---|---|---|---|---|
| **Aluminum Bus (Standard Offering)** | | | | | |
| 400 | Bottom | ② | 1/0–750 kcmil or (2) 1/0–300 kcmil | **1UGPB400R** | **3UGPB400R** |
| 800 | Bottom | ② | (2) 1/0–750 kcmil or (4) 1/0–300 kcmil | **1UGPB800R** | **3UGPB800R** |
| 1200 | Bottom | ② | (4) #2–600 kcmil | **1UGPB1200R** | **3UGPB1200R** |
| **Copper Bus (Premium Offering)** | | | | | |
| 400 | Bottom | ② | 1/0–750 kcmil or (2) 1/0–300 kcmil | **1UGPB400RC** | **3UGPB400RC** |
| 800 | Bottom | ② | (2) 1/0–750 kcmil or (4) 1/0–300 kcmil | **1UGPB800RC** | **3UGPB800RC** |
| 1200 | Bottom | ② | (4) #2–600 kcmil | **1UGPB1200RC** | **3UGPB1200RC** |

***Notes***

① Reference drawing EUSERC DWG-315.
② Pull box section includes landing studs for line side compression lugs. Wire sizes refer to load side connection.
③ Reference drawing EUSERC DWG-343.

***Main Bolted Pressure Contact Switches***

- Add suffix ST to catalog number for shunt trip
- Fuses not included
- 100 kAIC rating on switches with Class L fuses installed



## Main Bolted Pressure Contact Switches

| Ampere Rating | Feed | Class Fuse Clips (Fuses Not Included) | System Voltage 120/240 Vac Single-Phase, Three-Wire Catalog Number | 120/208 Vac Three-Phase, Four-Wire Catalog Number | Line Side Box Lugs and Wire Sizes (Included) |
|---|---|---|---|---|---|
| **Copper Bus** | | | | | |
| 1200 | Bottom | L | **1BPS1200RB** | **3BPS1200RB** | (4) #4–600 kcmil |
| 1200 | Top | L | **1BPS1200RT** | **3BPS1200RT** | (4) #4–600 kcmil |
| 1600 | Bottom | L | Use three-phase | **3BPS1600RB** | (6) #4–600 kcmil |
| 1600 | Top | L | Use three-phase | **3BPS1600RT** | (6) #4–600 kcmil |
| 2000 | Bottom | L | Use three-phase | **3BPS2000RB** | (8) #4–600 kcmil |
| 2000 | Top | L | Use three-phase | **3BPS2000RT** | (8) #4–600 kcmil |

***Main Circuit Breaker with Busway Connection***

Verify proper left/right–bus/main phasing.

**Note:** "Right" means that the bus duct is to the right of the main and "left" means that the bus duct is to the left of the main. (See Dimension/Layout section for clarification.)

Using this information, select the correct main device catalog number per the selection chart.

## Main Circuit Breaker with Busway Connection

| Ampere Rating | Feed | System Voltage 120/208 Vac Three-Phase, Four-Wire Catalog Number | Internal Ground or Housing Ground | Standard T or TO Opposite Phasing | Right or Left Side |
|---|---|---|---|---|---|
| 400 | Bottom | **3MFS400BCRGTO** | Internal | TO | Right |
| 600 | Bottom | **3MFS600BCRGTO** | Internal | TO | Right |
| 800 | Bottom | **3MFS800BCRGTO** | Internal | TO | Right |
| 400 | Bottom | **3MFS400BCLGTO** | Internal | TO | Left |
| 600 | Bottom | **3MFS600BCLGTO** | Internal | TO | Left |
| 800 | Bottom | **3MFS800BCLGTO** | Internal | TO | Left |
| 400 | Bottom | **3MFS400BCRGT** | Internal | T | Right |
| 600 | Bottom | **3MFS600BCRGT** | Internal | T | Right |
| 800 | Bottom | **3MFS800BCRGT** | Internal | T | Right |
| 400 | Bottom | **3MFS400BCLGT** | Internal | T | Left |
| 600 | Bottom | **3MFS600BCLGT** | Internal | T | Left |
| 800 | Bottom | **3MFS800BCLGT** | Internal | T | Left |
| 400 | Bottom | **3MFS400BCRNTO** | Housing | TO | Right |
| 600 | Bottom | **3MFS600BCRNTO** | Housing | TO | Right |
| 800 | Bottom | **3MFS800BCRNTO** | Housing | TO | Right |
| 400 | Bottom | **3MFS400BCLNTO** | Housing | TO | Left |
| 600 | Bottom | **3MFS600BCLNTO** | Housing | TO | Left |
| 800 | Bottom | **3MFS800BCLNTO** | Housing | TO | Left |
| 400 | Bottom | **3MFS400BCRNT** | Housing | T | Right |
| 600 | Bottom | **3MFS600BCRNT** | Housing | T | Right |
| 800 | Bottom | **3MFS800BCRNT** | Housing | T | Right |
| 400 | Bottom | **3MFS400BCLNT** | Housing | T | Left |
| 600 | Bottom | **3MFS600BCLNT** | Housing | T | Left |
| 800 | Bottom | **3MFS800BCLNT** | Housing | T | Left |
| 400 | Bottom | **3MCB400BCRGT** | Internal | T | Right |
| 400 | Bottom | **3HMCB400BCRGT** | Internal | T | Right |
| 600 | Bottom | **3MCB600BCRGT** | Internal | T | Right |
| 600 | Bottom | **3HMCB600BCRGT** | Internal | T | Right |
| 800 | Bottom | **3MCB800BCRGT** | Internal | T | Right |
| 800 | Bottom | **3HMCB800BCRGT** | Internal | T | Right |
| 1000 | Bottom | **3MCB1000BCRGT** | Internal | T | Right |
| 1000 | Bottom | **3HMCB1000BCRGT** | Internal | T | Right |
| 1200 | Bottom | **3MCB1200BCRGT** | Internal | T | Right |
| 1200 | Bottom | **3HMCB1200BCRGT** | Internal | T | Right |
| 400 | Bottom | **3MCB400BCLGT** | Internal | T | Left |
| 400 | Bottom | **3HMCB400BCLGT** | Internal | T | Left |
| 600 | Bottom | **3MCB600BCLGT** | Internal | T | Left |
| 600 | Bottom | **3HMCB600BCLGT** | Internal | T | Left |
| 800 | Bottom | **3MCB800BCLGT** | Internal | T | Left |
| 800 | Bottom | **3HMCB800BCLGT** | Internal | T | Left |
| 1000 | Bottom | **3MCB1000BCLGT** | Internal | T | Left |
| 1000 | Bottom | **3HMCB1000BCLGT** | Internal | T | Left |
| 1200 | Bottom | **3MCB1200BCLGT** | Internal | T | Left |
| 1200 | Bottom | **3HMCB1200BCLGT** | Internal | T | Left |
| 400 | Bottom | **3MCB400BCRNT** | Housing | T | Right |
| 400 | Bottom | **3HMCB400BCRNT** | Housing | T | Right |
| 600 | Bottom | **3MCB600BCRNT** | Housing | T | Right |
| 600 | Bottom | **3HMCB600BCRNT** | Housing | T | Right |
| 800 | Bottom | **3MCB800BCRNT** | Housing | T | Right |
| 800 | Bottom | **3HMCB800BCRNT** | Housing | T | Right |
| 1000 | Bottom | **3MBC1000BCRNT** | Housing | T | Right |
| 1000 | Bottom | **3HMBC1000BCRNT** | Housing | T | Right |

## Main Circuit Breaker with Busway Connection, continued

| Ampere Rating | Feed | System Voltage 120/208 Vac Three-Phase, Four-Wire Catalog Number | Internal Ground or Housing Ground | Standard T or TO Opposite Phasing | Right or Left Side |
|---|---|---|---|---|---|
| 1200 | Bottom | **3MCB1200BCRNT** | Housing | T | Right |
| 1200 | Bottom | **3HMCB1200BCRNT** | Housing | T | Right |
| 400 | Bottom | **3MCB400BCLNT** | Housing | T | Left |
| 400 | Bottom | **3HMCB400BCLNT** | Housing | T | Left |
| 600 | Bottom | **3MCB600BCLNT** | Housing | T | Left |
| 600 | Bottom | **3HMCB600BCLNT** | Housing | T | Left |
| 800 | Bottom | **3MCB800BCLNT** | Housing | T | Left |
| 800 | Bottom | **3HMCB800BCLNT** | Housing | T | Left |
| 1000 | Bottom | **3MCB1000BCLNT** | Housing | T | Left |
| 1000 | Bottom | **3HMCB1000BCLNT** | Housing | T | Left |
| 1200 | Bottom | **3MCB1200BCLNT** | Housing | T | Left |
| 1200 | Bottom | **3HMCB1200BCLNT** | Housing | T | Left |
| 400 | Bottom | **3MCB400BCRGTO** | Internal | TO | Right |
| 400 | Bottom | **3HMCB400BCRGTO** | Internal | TO | Right |
| 600 | Bottom | **3MCB600BCRGTO** | Internal | TO | Right |
| 600 | Bottom | **3HMCB600BCRGTO** | Internal | TO | Right |
| 800 | Bottom | **3MCB800BCRGTO** | Internal | TO | Right |
| 800 | Bottom | **3HMCB800BCRGTO** | Internal | TO | Right |
| 1000 | Bottom | **3MCB1000BCRGTO** | Internal | TO | Right |
| 1000 | Bottom | **3HMCB1000BCRGTO** | Internal | TO | Right |
| 1200 | Bottom | **3MCB1200BCRGTO** | Internal | TO | Right |
| 1200 | Bottom | **3HMCB1200BCRGTO** | Internal | TO | Right |
| 400 | Bottom | **3MCB400BCLGTO** | Internal | TO | Left |
| 400 | Bottom | **3HMCB400BCLGTO** | Internal | TO | Left |
| 600 | Bottom | **3MCB600BCLGTO** | Internal | TO | Left |
| 600 | Bottom | **3HMCB600BCLGTO** | Internal | TO | Left |
| 800 | Bottom | **3MCB800BCLGTO** | Internal | TO | Left |
| 800 | Bottom | **3HMCB800BCLGTO** | Internal | TO | Left |
| 1000 | Bottom | **3MCB1000BCLGTO** | Internal | TO | Left |
| 1000 | Bottom | **3HMCB1000BCLGTO** | Internal | TO | Left |
| 1200 | Bottom | **3MCB1200BCLGTO** | Internal | TO | Left |
| 1200 | Bottom | **3HMCB1200BCLGTO** | Internal | TO | Left |
| 400 | Bottom | **3MCB400BCRNTO** | Housing | TO | Right |
| 400 | Bottom | **3HMCB400BCRNTO** | Housing | TO | Right |
| 600 | Bottom | **3MCB600BCRNTO** | Housing | TO | Right |
| 600 | Bottom | **3HMCB600BCRNTO** | Housing | TO | Right |
| 800 | Bottom | **3MCB800BCRNTO** | Housing | TO | Right |
| 800 | Bottom | **3HMCB800BCRNTO** | Housing | TO | Right |
| 1000 | Bottom | **3MCB1000BCRNTO** | Housing | TO | Right |
| 1000 | Bottom | **3HMCB1000BCRNTO** | Housing | TO | Right |
| 1200 | Bottom | **3MCB1200BCRNTO** | Housing | TO | Right |
| 1200 | Bottom | **3HMCB1200BCRNTO** | Housing | TO | Right |
| 400 | Bottom | **3MCB400BCLNTO** | Housing | TO | Left |
| 400 | Bottom | **3HMCB400BCLNTO** | Housing | TO | Left |
| 600 | Bottom | **3MCB600BCLNTO** | Housing | TO | Left |
| 600 | Bottom | **3HMCB600BCLNTO** | Housing | TO | Left |
| 800 | Bottom | **3HMCB800BCLNTO** | Housing | TO | Left |
| 800 | Bottom | **3HMCB800BCLNTO** | Housing | TO | Left |
| 1000 | Bottom | **3MCB1000BCLNTO** | Housing | TO | Left |
| 1000 | Bottom | **3HMCB1000BCLNTO** | Housing | TO | Left |
| 1200 | Bottom | **3MCB1200BCLNTO** | Housing | TO | Left |
| 1200 | Bottom | **3HMCB1200BCLNTO** | Housing | TO | Left |

## Dimensions

Approximate Dimensions in Inches (mm)

### Dimensions (Not to be Used for Construction Purposes)

| Main Device | Width A | Height B | Depth C | Mounting D | E | Center Line of Wall Mounting Bracket F | Knockouts in Bottom Endwalls Except No KOs for Top Feed Switch or Bolted Pressure Switch Conduit Diameter Inches | mm | KO Dwg. |
|---|---|---|---|---|---|---|---|---|---|
| **Terminal Box** | | | | | | | | | |
| 400 and 600 A | 13.50 (342.9) | 48.75 (1238.3) | 7.00 (177.8) | — | 54.00 (1371.6) | 30.63 (777.9) | (1) 2.50, 3.00, 3.50, 4.00<br>(1) 0.50 | (1) 63.5, 76.2, 88.9, 101.6<br>(1) 12.7 | 1 |
| 800 and 1200 A | 20.00 (508.0) | 47.63 (1209.8) | 11.75 (298.5) | 12.00 (304.8) | 51.50 (1308.1) | 30.63 (777.9) | (2) 0.50, 0.75, 1.00<br>(4) 2.00, 2.50, 3.00, 3.50, 4.00 | (2) 12.1, 19.1, 25.4<br>(4) 50.8, 63.5, 76.2, 88.9, 101.6 | 2 |
| 1600 A | 32.88 (835.2) | 60.13 (1527.3) | 11.44 (290.6) | 16.00 (406.4) | 64.13 (1628.9) | 38.59 (980.2) | (1) 0.75, 1.00, 1.25, 1.50<br>(5) 3.00, 3.50, 4.00, 5.00 | (1) 19.1, 25.4, 31.8, 38.1<br>(5) 76.2, 88.9, 101.6, 127.0 | 3 |
| **Main Circuit Breaker with Box Lugs** | | | | | | | | | |
| 400–1200 A | 20.00 (508.0) | 47.63 (1209.8) | 11.75 (298.5) | 12.00 (304.8) | 51.50 (1308.1) | 30.63 (777.9) | (2) 0.50, 0.75, 1.00<br>(4) 2.00, 2.50, 3.00,3.50, 4.00 | (2) 12.7, 19.1, 25.4<br>(4) 50.8, 63.5, 76.2, 88.9, 101.6 | 2 |
| 1400–2000 A | 24.88 (632.0) | 57.13 (1451.0) | 14.88 (378.0) | 16.00 (406.4) | 57.13 (1451.0) | 44.00 (1117.6) | — | — | — |
| **Main Circuit Breaker with Compression Lugs** | | | | | | | | | |
| 400–1200 A | 20.00 (508.0) | 61.00 (1549.4) | 11.75 (298.5) | 12.00 (304.8) | 65.00 (1651.0) | 44.00 (1117.6) | (2) 0.50, 0.75, 1.00<br>(4) 2.00, 2.50, 3.00, 3.50, 4.00 | (2) 12.7, 19.1, 25.4<br>(4) 50.8, 63.5, 76.2, 88.9, 101.60 | 2 |
| **Main Fusible Switch** | | | | | | | | | |
| Bottom feed 400–800 A | 20.00 (508.0) | 47.63 (1209.8) | 11.75 (298.5) | 12.00 (304.8) | 51.50 (1308.1) | 30.63 (777.9) | (2) 0.50, 0.75, 1.00<br>(4) 2.00, 2.50, 3.00, 3.50, 4.00 | (2) 12.7, 19.1, 25.4<br>(4) 50.8, 63.5, 76.2, 88.9, 101.6 | 2 |
| Top feed 400–800 A | 20.00 (508.0) | 47.63 (1209.8) | 11.75 (298.5) | 12.00 (304.8) | 51.50 (1308.1) | 18.13 (460.4) | (2) 0.50, 0.75, 1.00<br>(4) 2.00, 2.50, 3.00, 3.50, 4.00 | (2) 12.7, 19.1, 25.4<br>(4) 50.8, 63.5, 76.2, 88.9, 101.6 | 2 |
| 1200 A | 33.50 (850.9) | 52.75 (1339.9) | 11.88 (301.8) | 16.00 (406.4) | 56.25 (1428.8) | 30.75 (781.1) | (5) 3.50, 4.00, 5.00<br>(1) 0.75, 1.00, 1.25, 1.50 | (5) 88.9, 101.6, 127.0<br>(1) 19.1, 25.4, 31.8, 38.1 | 4 |
| **Bolted Pressure Switch** | | | | | | | | | |
| | 36.50 (927.1) | 66.50 (1689.1) | 19.50 (495.3) | 28.00 (711.2) | 60.00 (1524.0) | 30.63 (777.9) | — | — | — |
| **Main Fusible Switch with Pull Box** | | | | | | | | | |
| 400 A | 20.00 (508.0) | 61.00 (1549.4) | 11.75 (298.5) | 12.00 (304.8) | 65.00 (1651.0) | 44.00 (1117.6) | (2) 0.50, 0.75, 1.00<br>(4) 2.00, 2.50, 3.00, 3.50, 4.00 | (2) 12.7, 19.1, 25.4<br>(4) 50.8, 63.5, 76.2, 88.9, 101.6 | 2 |
| 600 and 800 A (single-phase) | 20.00 (508.0) | 61.00 (1549.4) | 11.75 (298.5) | 12.00 (304.8) | 65.00 (1651.0) | 44.00 (1117.6) | (2) 0.50, 0.75, 1.00<br>(4) 2.00, 2.50, 3.00, 3.50, 4.00 | (2) 12.7, 19.1, 25.4<br>(4) 50.8, 63.5, 76.2, 88.9, 101.6 | 2 |
| 600 and 800 A (three-phase) | 25.06 (636.5) | 61.00 (1549.4) | 11.75 (298.5) | 17.00 (431.8) | 65.00 (1651.0) | 44.00 (1117.6) | (2) 0.50, 0.75, 1.00<br>(4) 2.00, 2.50, 3.00, 3.50, 4.00 | (2) 12.7, 19.1, 25.4<br>(4) 50.8, 63.5, 76.2, 88.9, 101.6 | 4 |
| 1200 A | 33.50 (850.9) | 61.50 (1562.1) | 11.88 (301.8) | 16.00 (406.4) | 65.25 (1657.4) | 48.00 (1219.2) | (5) 3.50, 4.00, 5.00<br>(1) 0.75, 1.00, 1.25, 1.50 | (5) 88.9, 101.6, 127.0<br>(1) 19.1, 25.4, 31.8, 38.1 | 4 |
| **Main Circuit Breaker with Pull Box (EUSERC)** | | | | | | | | | |
| 400 A | 20.01 (508.2) | 60.44 (1535.2) | 11.14 (283.0) | 12.00 (304.8) | 65.11 (1653.8) | 39.75 (1009.6) | (4) 2.50, 3.00, 3.50, 4.00 | (4) 63.5, 76.2, 88.9, 101.6 | 2 |
| 800 A | 24.88 (632.0) | 60.94 (1547.9) | 11.14 (283.0) | 17.00 (431.8) | 64.88 (1648.0) | 39.81 (1011.2) | (4) 2.50, 3.00, 3.50, 4.00 | (4) 63.5, 76.2, 88.9, 101.6 | 2 |
| 1200 A | 33.00 (838.2) | 61.14 (1553.0) | 11.32 (287.5) | 16.00 (406.4) | 65.25 (1657.4) | 43.56 (1106.4) | (4) 2.50, 3.00, 3.50, 4.00 | (4) 63.5, 76.2, 88.9, 101.6 | 4 |
| **Pull Box** | | | | | | | | | |
| 400 A | 16.38 (416.1) | 44.88 (1140.0) | 7.88 (200.2) | 8.00 (203.2) | 45.75 (1162.1) | 28.63 (727.2) | (2) 4.00 | 101.6 | 5 |
| 800 A | 24.38 (619.3) | 46.88 (1190.8) | 11.88 (301.8) | 12.00 (304.8) | 47.75 (1212.9) | 32.25 (819.2) | (3) 4.00 | 101.6 | 6 |
| 1200 A | 32.50 (825.5) | 56.88 (1444.8) | 12.00 (304.8) | 17.75 (450.9) | 57.75 (1466.9) | 42.25 (1073.2) | (4) 5.00 | 127.0 | 7 |
| **EUSERC Bussed Pull Section** | | | | | | | | | |
| Single-phase 400 and 800 A | 20.13 (511.3) | 61.00 (1549.4) | 11.25 (285.8) | 12.00 (304.8) | 64.88 (1648.0) | 44.00 (1117.6) | (4) 2.50, 3.00, 3.50, 4.00 | (4) 63.5, 76.2, 88.9, 101.6 | 5 |
| Three-phase 400 and 800 A | 25.13 (638.3) | 61.00 (1549.4) | 11.88 (301.8) | 17.00 (431.8) | 64.88 (1648.0) | 44.00 (1117.6) | (4) 2.50, 3.00, 3.50, 4.00 | (4) 63.5, 76.2, 88.9, 101.6 | 6 |
| **EUSERC Main Terminal Box** | | | | | | | | | |
| Single-phase 400 and 800 A | 20.13 (511.3) | 61.00 (1549.4) | 11.88 (301.8) | 12.00 (304.8) | 64.88 (1648.0) | 44.00 (1117.6) | (2) 0.50, 0.75, 1.00 | (2) 12.7, 19.1, 25.4 | 2 |
| Three-phase 400 A | 20.13 (511.3) | 61.00 (1549.4) | 11.88 (301.8) | 12.00 (304.8) | 64.88 (1648.0) | 44.00 (1117.6) | (4) 2.00, 2.50, 3.00, 3.50, 4.00 | (4) 50.8, 63.5, 76.2, 88.9, 101.6 | 2 |
| Three-phase 800 A | 25.13 (638.3) | 61.00 (1549.4) | 11.88 (301.8) | 17.00 (431.8) | 64.88 (1648.0) | 44.00 (1117.6) | (4) 2.00, 2.50, 3.00, 3.50, 4.00 | (4) 50.8, 63.5, 76.2, 88.9, 101.6 | 2 |

Approximate Dimensions in Inches (mm)

### Main Circuit Breakers, Terminal Boxes and Pull Boxes

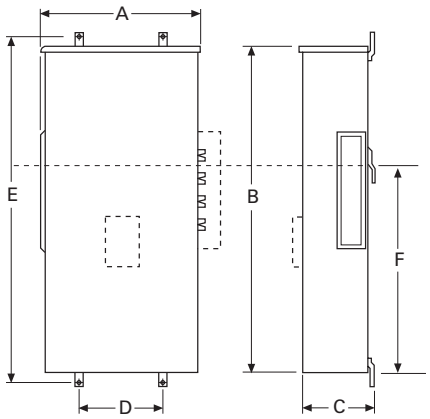


**Main CB, Non-Euserc Terminal Box and Pullboxes**

### Bolted Pressure Switch

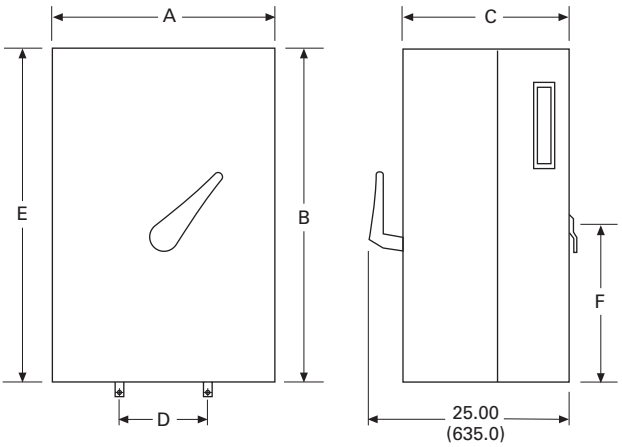


### Top Feed Fusible Switch

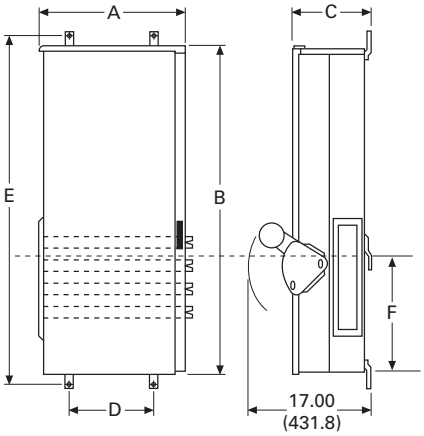


**Top Feed Switch (No Knockouts)**

### EUSERC Main Terminal Box

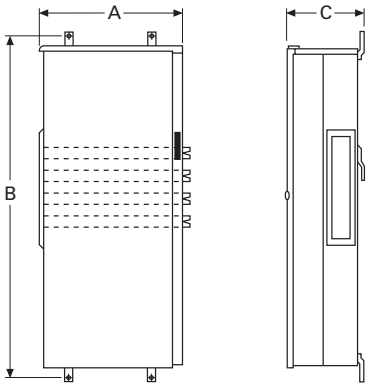


### Bottom Feed Fusible Switch and Combination Fusible Switch with Pull Box

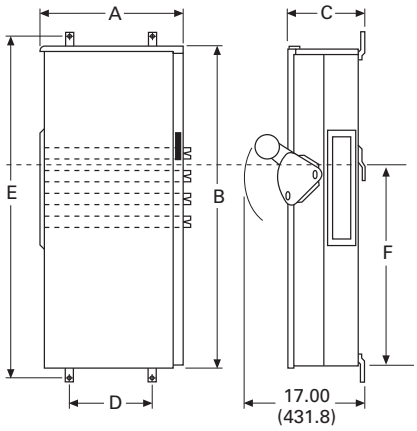


**Bottom Feed Switch and Combination Switch/Pullbox**

Approximate Dimensions in Inches (mm)

## Knockout 1

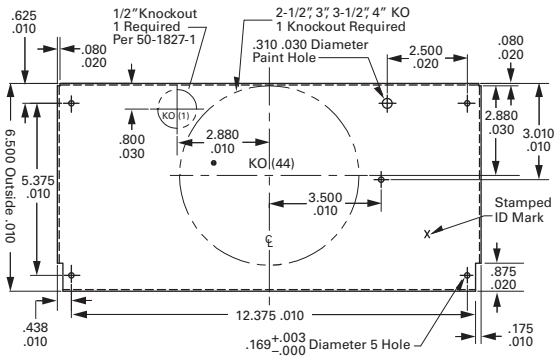


## Knockout 2

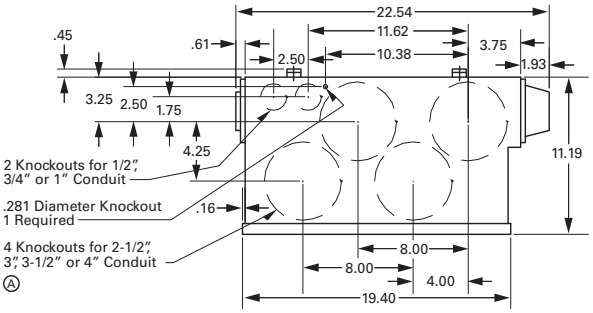


## Knockout 3

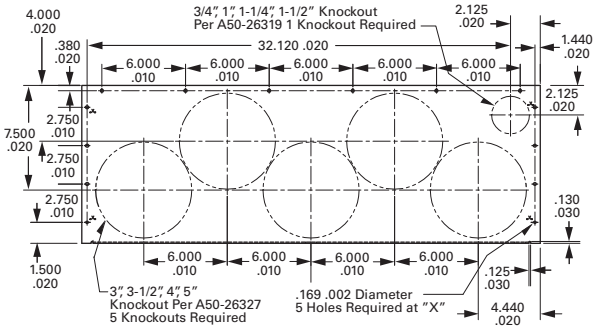


## Knockout 4

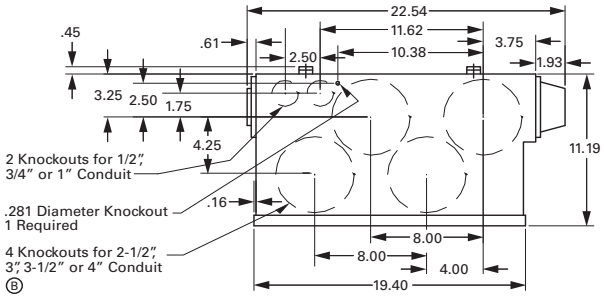


## Knockout 5

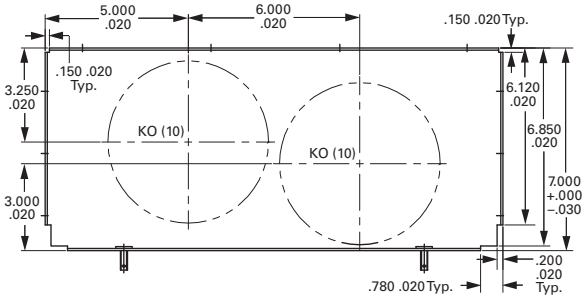


## Knockout 6

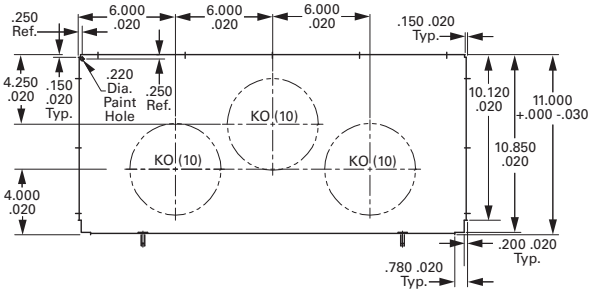


## Knockout 7

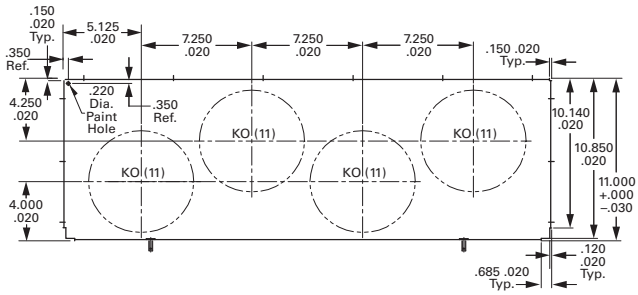


## Knockout 8

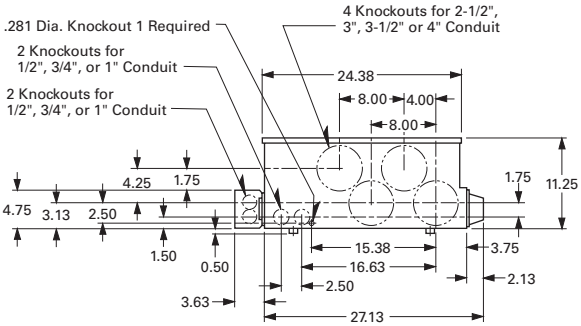

Approximate Dimensions in Inches (mm)

**Layout—Main Fusible Switch**

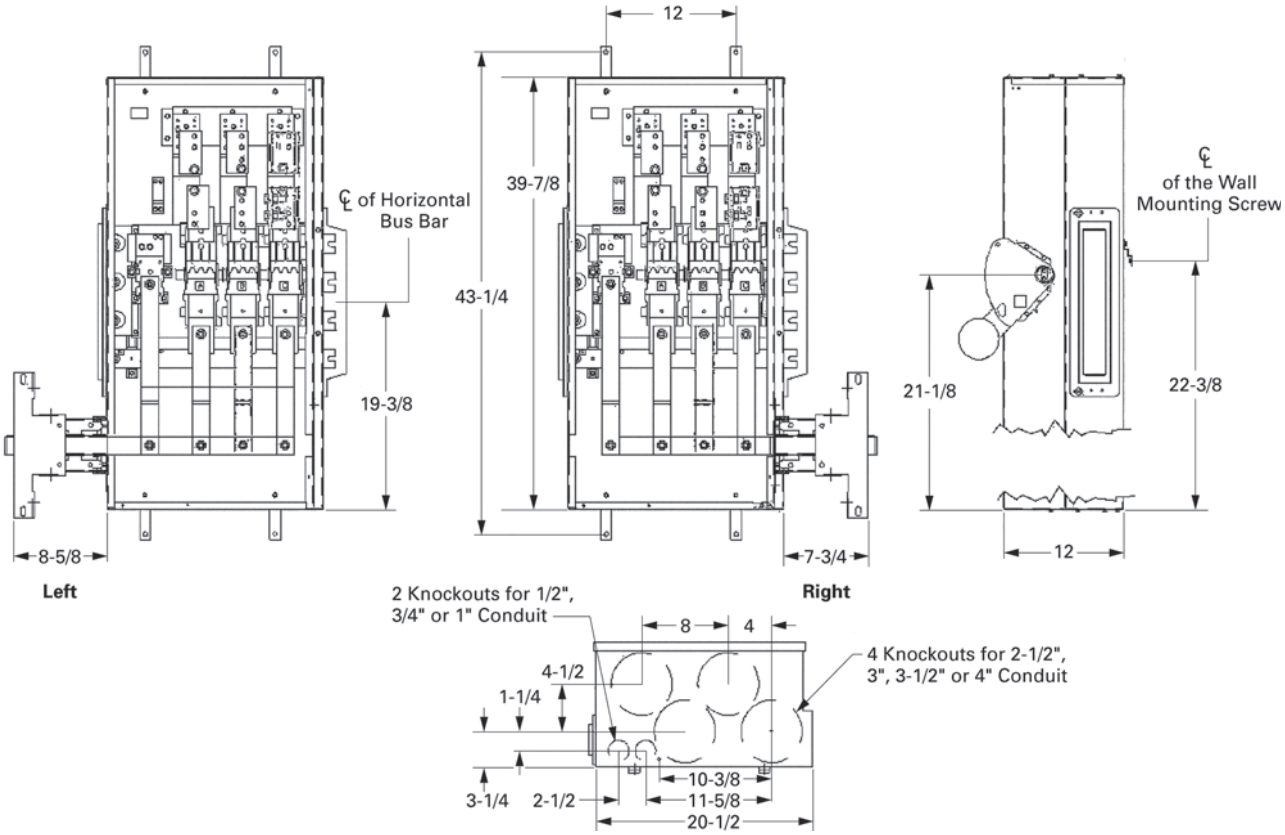

Approximate Dimensions in Inches (mm)

### Main Circuit Breaker—"T-Opposite" Phasing Right

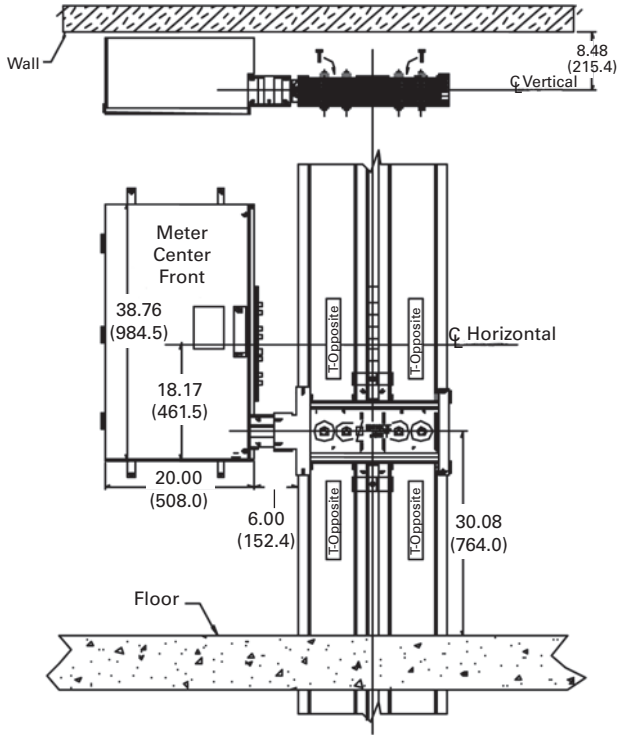


### Main Circuit Breaker—"Standard T" Phasing Right

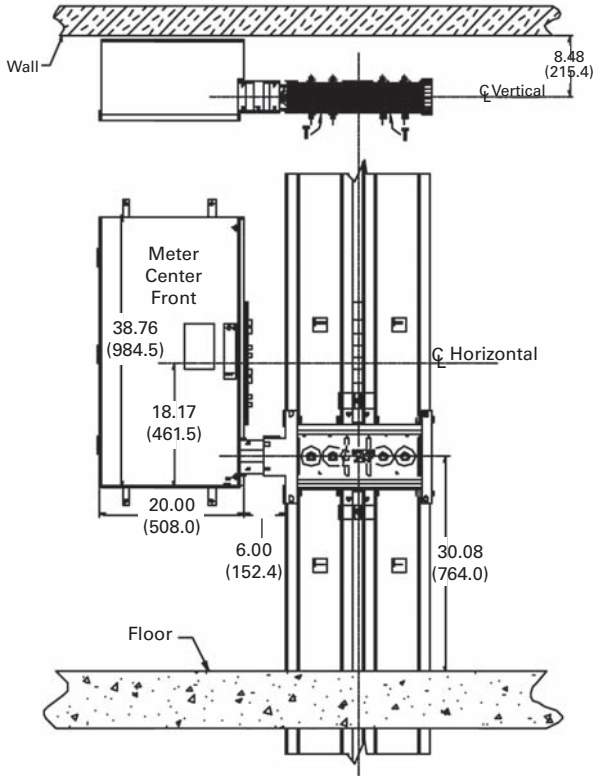


### Main Circuit Breaker—"T-Opposite" Phasing Left

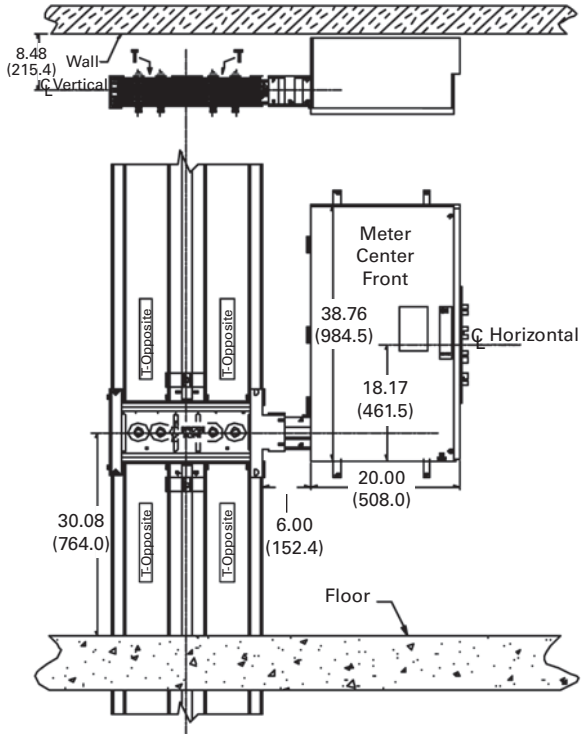


### Main Circuit Breaker—"Standard T" Phasing Left

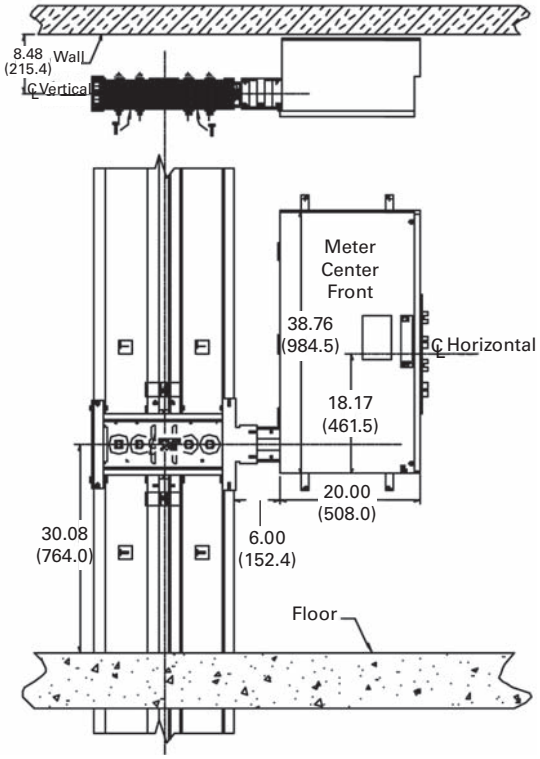

Surge Metering

*Surge suppression devices shown are factory mounted in Group Metering Enclosure.*

## Contents


| *Description* | *Page* |
|---|---|
| Systems for Residential and Commercial Applications | **V1-T4-88** |
| Meter Packs | **V1-T4-90** |
| Type CCV 120/240 V Tenant Main Circuit Breaker | **V1-T4-95** |
| Type CV 120/240 V Tenant Main Circuit Breaker | **V1-T4-96** |
| Meter Packs—1MP, 1MM and 3MM Main Tenant Circuit Breakers | **V1-T4-98** |
| Main Service Modules | **V1-T4-101** |
| Surge Metering | |
| Group Metering Inline Current Transformer Cabinets | **V1-T4-116** |
| Residential Meter Stacks | **V1-T4-118** |
| 1MP, 1MM and 3MM Main Tenant Circuit Breakers | **V1-T4-127** |
| Phase Balanced Stack | **V1-T4-128** |
| Commercial Meter Stack Modules | **V1-T4-129** |
| 35MM, 37MM, 35SS and 37SS Main Tenant Circuit Breakers | **V1-T4-136** |


4

## Surge Metering

### Product Description

Eaton's multiple metering product family is proud to announce the availability of main surge devices. The new main surge is mounted between the main service module and the meter stacks and serves the purpose of providing surge protection for downstream multiple metering products. The main surge is compatible with all meter stacks currently manufactured (1MM, 3MM, 35MM and 37MM).

### Features, Benefits and Functions

- Uses thermally protected metal oxide varistor (MOV) technology
- Compatible with 37MM enclosure accessories
- Protection status indicator lights EMI/RFI filtering and audible alarms
- Offers surge protection for all units fed from a main service module
- Benefit for building/complex owners who want to offer surge protection to their tenants. Owner can market their apartment complex as being surge friendly to appliances and electronics
- **Attain local utility company approval. Not for use in EUSERC area**

### Standards and Certifications

- UL 1449 3rd Edition recognized component

UL Listed

### Product Selection

#### Surge Metering

| Voltage | Surge Current per Phase (kA) | Diagnostics | Catalog Number |
|---|---|---|---|
| 120/240 V single-phase | 100 | Standard | **1MMSURGE** |
| 208Y/120 V three-phase | 100 | Standard | **3MMSURGE** |

## Contents


| *Description* | *Page* |
|---|---|
| Systems for Residential and Commercial Applications | **V1-T4-88** |
| Meter Packs | **V1-T4-90** |
| Type CCV 120/240 V Tenant Main Circuit Breaker | **V1-T4-95** |
| Type CV 120/240 V Tenant Main Circuit Breaker | **V1-T4-96** |
| Meter Packs—1MP, 1MM and 3MM Main Tenant Circuit Breakers | **V1-T4-98** |
| Main Service Modules | **V1-T4-101** |
| Surge Metering | **V1-T4-115** |
| Group Metering Inline Current Transformer Cabinets | |
| Residential Meter Stacks | **V1-T4-118** |
| 1MP, 1MM and 3MM Main Tenant Circuit Breakers | **V1-T4-127** |
| Phase Balanced Stack | **V1-T4-128** |
| Commercial Meter Stack Modules | **V1-T4-129** |
| 35MM, 37MM, 35SS and 37SS Main Tenant Circuit Breakers | **V1-T4-136** |


## Group Metering Inline Current Transformer Cabinets

### Product Description

Eaton's group metering inline current transformer (CT) cabinets are used when utilities require the use of current transformers to meter large services. These products are compatible with Eaton's group metering offering for both single- and three-phase applications with tenant metering requirements greater than 400 A.

### Features, Benefits and Functions

- Replaces separate termination box in installation to save wall space, labor and material for the contractor
- Compatible for utility-provided current transformers to be bolted in place, increasing flexibility to both the customer and utility
- Padlockable hinged doors restrict access to fuses or current transformers to ensure safety and security
- Available for pullout or fusible switch disconnect to accommodate the user's preference
- Offered in three-phase in/three-phase out, three-phase in / single-phase out, and single-phase in/single-phase out to complete a full product line offering

## Product Selection

### Group Metering Inline Current Transformer Cabinets

| Ampere Rating | Pullout or Switch | Phase | Catalog Number |
|---|---|---|---|
| 400 | 2 Pullouts | Single-phase in / single-phase out | **CTAP3244NCM8CH11** |
| 400 | 2 Pullouts | Three-phase in / single-phase out | **CTAP3244NCM8CH31** |
| 400 | 1 Pullout | Single-phase in / single-phase out | **CTAP325NCM8CH11** |
| 400 | 1 Pullout | Three-phase in / single-phase out | **CTAP325NCM8CH31** |
| 400 | 2 Pullouts | Three-phase in / three-phase out | **CTAP4244NCM8CH** |
| 400 | 1 Pullout | Three-phase in / three-phase out | **CTAP425NCM8CH** |
| 400 | Switch | Single-phase in / single-phase out | **CTAT325NCM8CH11** |
| 400 | Switch | Three-phase in / single-phase out | **CTAT325NCM8CH31** |
| 600 | Switch | Single-phase in / single-phase out | **CTAT326NCM8CH11** |
| 600 | Switch | Three-phase in / single-phase out | **CTAT326NCM8CH31** |
| 800 | Switch | Single-phase in / single-phase out | **CTAT327NCM8CH11** |
| 800 | Switch | Three-phase in / single-phase out | **CTAT327NCM8CH31** |
| 400 | Switch | Three-phase in / three-phase out | **CTAT425NCM8CH** |
| 600 | Switch | Three-phase in / three-phase out | **CTAT426NCM8CH** |
| 800 | Switch | Three-phase in / three-phase out | **CTAT427NCM8CH** |

## Accessories

### Group Metering Inline Current Transformer Cabinets

| Description | Catalog Number |
|---|---|
| Wire harness (6 ft) per COMED requirements | **9659** |
| 400 A C/T link and support assembly | **CTL054550** |
| 600 A C/T link and support assembly | **CTL054552** |
| 800 A C/T link and support assembly | **CTL054554** |

## Dimensions

Approximate Dimensions in Inches (mm)

### Group Metering Inline Current Transformer Cabinets

| Height | Width | Depth |
|---|---|---|
| 64.00 (1625.6) | 26.50 (673.1) | 15.00 (381.0) |

**1MM and 3MM Metering Stack Modules**

## Contents


| *Description* | *Page* |
|---|---|
| Systems for Residential and Commercial Applications | **V1-T4-88** |
| Meter Packs | **V1-T4-90** |
| Type CCV 120/240 V Tenant Main Circuit Breaker | **V1-T4-95** |
| Type CV 120/240 V Tenant Main Circuit Breaker | **V1-T4-96** |
| Meter Packs—1MP, 1MM and 3MM Main Tenant Circuit Breakers | **V1-T4-98** |
| Main Service Modules | **V1-T4-101** |
| Surge Metering | **V1-T4-115** |
| Group Metering Inline Current Transformer Cabinets | **V1-T4-116** |
| Residential Meter Stacks | |
| 1MP, 1MM and 3MM Main Tenant Circuit Breakers | **V1-T4-127** |
| Phase Balanced Stack | **V1-T4-128** |
| Commercial Meter Stack Modules | **V1-T4-129** |
| 35MM, 37MM, 35SS and 37SS Main Tenant Circuit Breakers | **V1-T4-136** |


## Residential Meter Stacks

### Features, Benefits and Functions

***A. Barrier***
Meter socket and tenant main breaker/wireway sections are separated by a solid metal barrier to guard unmetered bus against power theft.

***B. Tenant Breaker***
Reliable busbar–to–busbar connection. 200 A modules accept bolt-on breakers 60–200 A. 125 A modules accept 15–125 A plug-on breakers.

***C. Moveable Phase Connector***
Four-wire horizontal bus lets you use any 3MM module for single- or three-phase incoming service. Shipped with A and B phase connection, phase balancing is easily accomplished in the field by moving one, front-accessible phase connector post per module.

***D. Neutral Assembly***
A convenient termination for neutral conductors is in the wireway of each module.

***E. Enclosed Horizontal Bus***
Added security because a non-removable barrier encloses the 800 or 1200 A horizontal bus passing through tenant breaker section.

***F. Equipment Ground Bar***
Factory installed in side gutter, a standard feature that's moveable to the top or bottom gutter.

***G. Raintight Cap***
Shipped on each outdoor meter module and main device.

***H. Knockouts***
Tangential in bottom endwall.

***I. Superior Finish***
Rust inhibiting phosphate primer and gray baked enamel is standard. All outdoor enclosures are of galvanized steel construction.

***J. Meter Socket***
Our unique meter socket base is installed without any fasteners—reducing chances for hot spots, easily replaceable, and improves connection to vertical bus.

***K. Bus Connection***
Mains and modules slip together quickly and smoothly with front-accessible captive bolts securing the juncture without removing socket interiors or bus access plate. Main bus joint bolts torque to 25 foot pounds.

***L. Separate Wireway Cover***
Separate covers allow easy access to tenant breaker and wireway section, permit work on breakers or in wireway without disturbing meters or meter covers. (Not shown.)

***M. Vertical Busbar***
One-piece vertical busbar from phase balancing joints to meter socket eliminating any chance for hot spots.

**1MM Meter Stack Module**

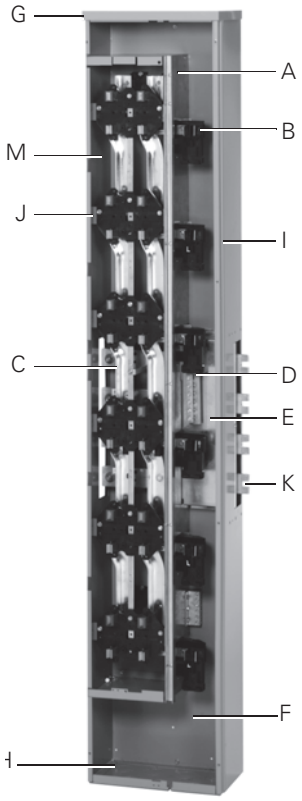

- Eaton's 1MM stacks are single-phase in, single-phase out design
- Eaton's 3MM stacks are three-phase in, single-phase out design
- Stacks with single-phase horizontal bus are rated 240/120 V, single-phase, three-wire. Stacks with three-phase horizontal bus are rated 208Y/120 V, three-phase, four-wire, but can be used on 240/120 V, three-phase, four-wire delta systems
- All three-phase horizontal bus modules have four-wire cross bus, connected A-B phase to vertical bus, readily reconnectable for phase balance on installation

**Note:** Individual sockets cannot be phase balanced, only each stack.

- Short-circuit ratings up to 100,000 A rms symmetrical depending upon AIC rating of installed main tenant circuit breakers and main device
- Main tenant feeders can exit bottom or back. Knockouts are available at all exit locations
- If being used in outdoor application and exiting the top, mount Myer type hubs on rainproof cap
- Provision for two-pole breaker (plug-on type for 125 A sockets and bolt-on type for 200 A sockets)—circuit breakers not included
- Mechanically and electrically built to bolt-up with main service modules and commercial modular metering stacks
- Aluminum or copper bus
- 800 or 1200 A horizontal bus
- All 3MM stacks include fifth jaw at 9 o'clock position
- All 1MM stacks do not include fifth jaw. Order 1MM5JK if needed

## Catalog Number Selection

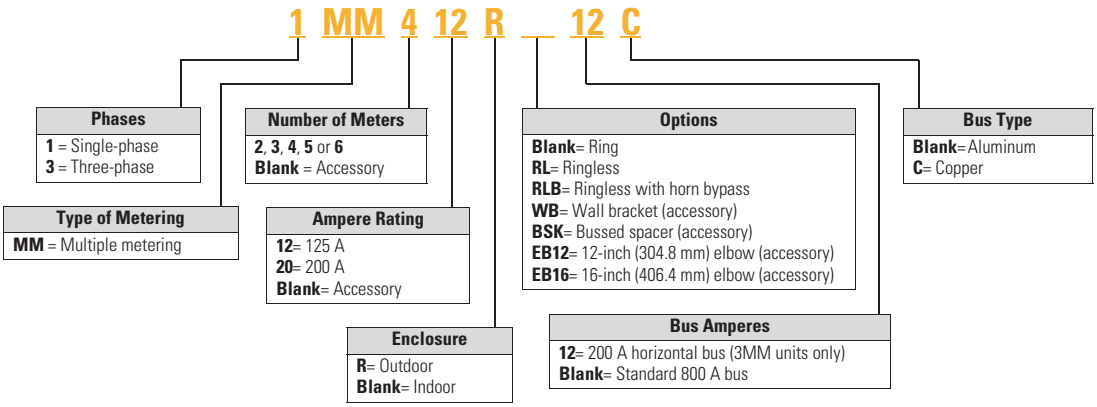


**When Ordering:**

1. Determine catalog number of Main Service Module.
2. Determine catalog number of Meter Stack (Residential or Commercial).
3. Find quantity and catalog numbers for tenant circuit breakers (found on **Page V1-T4-127** or **V1-T4-137**). Order one breaker per socket.
4. If any accessories are needed, order from **Pages V1-T4-138** and **V1-T4-139**.

## Product Selection

**1MM and 3MM Metering Stack Modules**

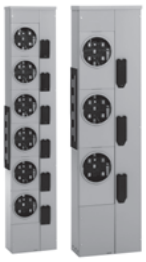

### 800 A Horizontal Aluminum Bus—Standard Offering

| Amperes Per Meter Socket | Number of Meter Sockets | Bus Ampacity | Enclosure Type ① | Main Tenant Breaker Type (For Specific Catalog Numbers, Refer to Page V1-T4-127) | Single-Phase In, Single-Phase Out<br>Single-Phase Horizontal Bus (Three Horizontal Busbars—A, B and Neutral) ②<br>Catalog Number | Three-Phase In, Single-Phase Out<br>Three-Phase Horizontal Bus (Four Horizontal Busbars—A, B, C and Neutral)<br>Catalog Number |
|---|---|---|---|---|---|---|
| **Ring Style Meter Socket Covers ③** | | | | | | |
| 125 ④ | 2 ⑤ | 800 | Indoor/outdoor | Plug-on type<br>BR2_<br>BRH2_<br>BRHH2_<br>BRX2_ | Use three-phase | **3MM212R** |
| | 3 ⑤ | 800 | Indoor/outdoor | | **1MM312R** | **3MM312R** |
| | 4 | 800 | Indoor/outdoor | | **1MM412R** | **3MM412R** |
| | 5 | 800 | Indoor/outdoor | | **1MM512R** | **3MM512R** |
| | 6 | 800 | Indoor/outdoor | | **1MM612R** | **3MM612R** |
| 200 ⑥ | 2 | 800 | Outdoor | Bolt-on type<br>CCV2_X<br>CCVH2_X<br>CVS2_XMM<br>CV2_XMM<br>CVH2_XMM | Use three-phase | **3MM220R** |
| | 3 | 800 | Outdoor | | **1MM320R** | **3MM320R** |
| | 4 | 800 | Outdoor | | **1MM420R** | **3MM420R** |
| | 5 | 800 | Outdoor | | **1MM520R** ⑦ | **3MM520R** ⑥ |
| **Ringless Style Meter Socket Covers** | | | | | | |
| 125 | 2 | 800 | Outdoor | Plug-on type<br>BR2_<br>BRH2_<br>BRHH2_<br>BRX2_ | Use three-phase | **3MM212RRL** |
| | 3 | 800 | Outdoor | | **1MM312RRL** | **3MM312RRL** |
| | 4 | 800 | Outdoor | | **1MM412RRL** | **3MM412RRL** |
| | 5 | 800 | Outdoor | | **1MM512RRL** | **3MM512RRL** |
| | 6 | 800 | Outdoor | | **1MM612RRL** | **3MM612RRL** |
| 200 | 2 | 800 | Outdoor | Bolt-on type<br>CCV2_X<br>CCVH2_X<br>CVS2_XMM<br>CV2_XMM<br>CVH2_XMM | Use three-phase | **3MM220RRL** |
| | 3 | 800 | Outdoor | | **1MM320RRL** | **3MM320RRL** |
| | 4 | 800 | Outdoor | | **1MM420RRL** | **3MM420RRL** |
| | 5 | 800 | Outdoor | | **1MM520RRL** ⑦ | **3MM520RRL** ⑥ |
| **Ringless Style Covers with Horn Bypass** | | | | | | |
| 125 | 2 | 800 | Outdoor | Plug-on type<br>BR2_<br>BRH2_<br>BRHH2_<br>BRX2_ | Use three-phase | **3MM212RRLB** |
| | 3 | 800 | Outdoor | | **1MM312RRLB** | **3MM312RRLB** |
| | 4 | 800 | Outdoor | | **1MM412RRLB** | **3MM412RRLB** |
| | 5 | 800 | Outdoor | | **1MM512RRLB** | **3MM512RRLB** |
| | 6 | 800 | Outdoor | | **1MM612RRLB** | **3MM612RRLB** |
| 200 | 2 | 800 | Outdoor | Bolt-on type<br>CCV2_X<br>CCVH2_X<br>CVS2_XMM<br>CV2_XMM<br>CVH2_XMM | Use three-phase | **3MM220RRLB** |
| | 3 | 800 | Outdoor | | **1MM320RRLB** | **3MM320RRLB** |
| | 4 | 800 | Outdoor | | **1MM420RRLB** | **3MM420RRLB** |
| | 5 | 800 | Outdoor | | **1MM520RRLB** ⑦ | **3MM520RRLB** ⑥ |

***Notes***

① For indoor applications where a top endwall with knockouts is needed, order one of part number **MM12N1WLK** for each 125 A stack or **MM20N1WLK** for each 200 A stack.
② 1MM units do not come with 5th jaw.
③ Reference drawing EUSERC DWG-G1, G2, G3.
④ To change in field from ring to ringless—order **1MMRC125**.
⑤ To change in field from ring to ringless, the top socket in 125 A, two- and three-high stacks use **1MMRC125T**. Top socket only—other sockets see ④.
⑥ To change in field from ring to ringless—order **1MMRC200**.
⑦ Check with local utility for height requirements or restrictions.

**1MM and 3MM Metering Stack Modules**

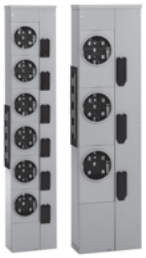

## 800 A Horizontal Copper Bus—Premium Offering

| Amperes Per Meter Socket | Number of Meter Sockets | Bus Ampacity | Enclosure Type ① | Main Tenant Breaker Type (For Specific Catalog Numbers, Refer to Page V1-T4-127) | Single-Phase In, Single-Phase Out<br>Single-Phase Horizontal Bus (Three Horizontal Busbars—A, B, C and Neutral) ②<br>Catalog Number | Three-Phase In, Single-Phase Out<br>Three-Phase Horizontal Bus (Four Horizontal Busbars—A, B, C and Neutral)<br>Catalog Number |
|---|---|---|---|---|---|---|
| **Ring Style Meter Socket Covers ③** | | | | | | |
| 125 ④ | 2 ⑤ | 800 | Outdoor | Plug-on type<br>BR2_<br>BRH2_<br>BRHH2_<br>BRX2_ | Use three-phase | **3MM212RC** |
| | 3 ⑤ | 800 | Outdoor | | **1MM312RC** | **3MM312RC** |
| | 4 | 800 | Outdoor | | **1MM412RC** | **3MM412RC** |
| | 5 | 800 | Outdoor | | **1MM512RC** | **3MM512RC** |
| | 6 | 800 | Outdoor | | **1MM612RC** | **3MM612RC** |
| 200 ⑥ | 2 | 800 | Outdoor | Bolt-on type<br>CCV2_X<br>CCVH2_X<br>CVS2_XMM<br>CV2_XMM<br>CVH2_XMM | Use three-phase | **3MM220RC** |
| | 3 | 800 | Outdoor | | **1MM320RC** | **3MM320RC** |
| | 4 | 800 | Outdoor | | **1MM420RC** | **3MM420RC** |
| | 5 | 800 | Outdoor | | **1MM520RC** ⑦ | **3MM520RC** ⑥ |
| **Ringless Style Meter Socket Covers** | | | | | | |
| 125 | 2 | 800 | Outdoor | Plug-on type<br>BR2_<br>BRH2_<br>BRHH2_<br>BRX2_ | Use three-phase | **3MM212RRLC** |
| | 3 | 800 | Outdoor | | **1MM312RRLC** | **3MM312RRLC** |
| | 4 | 800 | Outdoor | | **1MM412RRLC** | **3MM412RRLC** |
| | 5 | 800 | Outdoor | | **1MM512RRLC** | **3MM512RRLC** |
| | 6 | 800 | Outdoor | | **1MM612RRLC** | **3MM612RRLC** |
| 200 | 2 | 800 | Outdoor | Bolt-on type<br>CCV2_X<br>CCVH2_X<br>CVS2_XMM<br>CV2_XMM<br>CVH2_XMM | Use three-phase | **3MM220RRLC** |
| | 3 | 800 | Outdoor | | **1MM320RRLC** | **3MM320RRLC** |
| | 4 | 800 | Outdoor | | **1MM420RRLC** | **3MM420RRLC** |
| | 5 | 800 | Outdoor | | **1MM520RRLC** ⑦ | **3MM520RRLC** ⑥ |
| **Ringless Style Covers with Horn Bypass** | | | | | | |
| 125 | 2 | 800 | Outdoor | Plug-on type<br>BR2_<br>BRH2_<br>BRHH2_<br>BRX2_ | Use three-phase | **3MM212RRLBC** |
| | 3 | 800 | Outdoor | | **1MM312RRLBC** | **3MM312RRLBC** |
| | 4 | 800 | Outdoor | | **1MM412RRLBC** | **3MM412RRLBC** |
| | 5 | 800 | Outdoor | | **1MM512RRLBC** | **3MM512RRLBC** |
| | 6 | 800 | Outdoor | | **1MM612RRLBC** | **3MM612RRLBC** |
| 200 | 2 | 800 | Outdoor | Bolt-on type<br>CCV2_X<br>CCVH2_X<br>CVS2_XMM<br>CV2_XMM<br>CVH2_XMM | Use three-phase | **3MM220RRLBC** |
| | 3 | 800 | Outdoor | | **1MM320RRLBC** | **3MM320RRLBC** |
| | 4 | 800 | Outdoor | | **1MM420RRLBC** | **3MM420RRLBC** |
| | 5 | 800 | Outdoor | | **1MM520RRLBC** ⑦ | **3MM520RRLBC** ⑥ |

***Notes***

① For indoor applications where a top endwall with knockouts is needed, order (1) of part number **MM12N1WLK** for each 125 A stack or **MM20N1WLK** for each 200 A stack.
② 1MM units do not come with 5th jaw.
③ Reference drawing EUSERC DWG-G1, G2, G3.
④ To change in field from ring to ringless—order **1MMRC125**.
⑤ To change in field from ring to ringless, the top socket in 125 A, two- and three-high stacks use **1MMRC125T**. Top socket only—other sockets see ④.
⑥ To change in field from ring to ringless—order **1MMRC200**.
⑦ Check with local utility for height requirements or restrictions.

**1MM and 3MM Metering Stack Modules**

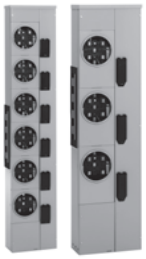



## 1200 A Horizontal Aluminum Bus—Standard Offering

| Amperes Per Meter Socket | Number of Meter Sockets | Bus Ampacity | Enclosure Type ① | Main Tenant Breaker Type (For Specific Catalog Numbers, Refer to Page V1-T4-118) | Three-Phase In, Single-Phase Out Three-Phase Horizontal Bus (Four Horizontal Busbars—A, B, C and Neutral) Catalog Number |
|---|---|---|---|---|---|
| **Ring Style Meter Socket Covers ②** | | | | | |
| 125 ③ | 2 ④ | 1200 | Indoor/outdoor | Plug-on type BR2_ BRH2_ BRHH2_ BRX2_ | **3MM212R12** |
| | 3 ④ | 1200 | Indoor/outdoor | | **3MM312R12** |
| | 4 | 1200 | Indoor/outdoor | | **3MM412R12** |
| | 5 | 1200 | Indoor/outdoor | | **3MM512R12** |
| | 6 | 1200 | Indoor/outdoor | | **3MM612R12** |
| 200 ⑤ | 2 | 1200 | Outdoor | Bolt-on type CCV2_X CCVH2_X CVS2_XMM CV2_XMM CVH2_XMM | **3MM220R12** |
| | 3 | 1200 | Outdoor | | **3MM320R12** |
| | 4 | 1200 | Outdoor | | **3MM420R12** |
| | 5 | 1200 | Indoor/outdoor | | **3MM520R12** |
| **Ringless Style Meter Socket Covers (5th Jaw at 9 o'Clock Standard—Field Adjustable to 3 or 6 o'Clock)** | | | | | |
| 125 | 2 | 1200 | Outdoor | Plug-on type BR2_ BRH2_ BRHH2_ BRX2_ | **3MM212R12RL** |
| | 3 | 1200 | Outdoor | | **3MM312R12RL** |
| | 4 | 1200 | Outdoor | | **3MM412R12RL** |
| | 5 | 1200 | Outdoor | | **3MM512R12RL** |
| | 6 | 1200 | Outdoor | | **3MM612R12RL** |
| 200 | 2 | 1200 | Outdoor | Bolt-on type CCV2_X CCVH2_X CVS2_XMM CV2_XMM CVH2_XMM | **3MM220R12RL** |
| | 3 | 1200 | Outdoor | | **3MM320R12RL** |
| | 4 | 1200 | Outdoor | | **3MM420R12RL** |
| | 5 | 1200 | Outdoor | | **3MM520R12RL** |
| **Ringless Style Covers with Horn Bypass (5th Jaw at 9 o'Clock Standard—Field Adjustable to 3 or 6 o'Clock)** | | | | | |
| 125 | 2 | 1200 | Outdoor | Plug-on type BR2_ BRH2_ BRHH2_ BRX2_ | **3MM212R12RLB** |
| | 3 | 1200 | Outdoor | | **3MM312R12RLB** |
| | 4 | 1200 | Outdoor | | **3MM412R12RLB** |
| | 5 | 1200 | Outdoor | | **3MM512R12RLB** |
| | 6 | 1200 | Outdoor | | **3MM612R12RLB** |
| 200 | 2 | 1200 | Outdoor | Bolt-on type CCV2_X CCVH2_X CVS2_XMM CV2_XMM CVH2_XMM | **3MM220R12RLB** |
| | 3 | 1200 | Outdoor | | **3MM320R12RLB** |
| | 4 | 1200 | Outdoor | | **3MM420R12RLB** |
| | 5 | 1200 | Outdoor | | **3MM520R12RLB** |

***Notes***

① 111For indoor applications where a top endwall with knockouts is needed, order (one) of part number **MM12N1WLK** for each 125 A stack or **MM20N1WLK** for each 200 A stack.

② Reference drawing EUSERC DWG-G1, G2, G3.

③ To change in field from ring to ringless—order **1MMRC125**.

④ To change in field from ring to ringless, the top socket in 125 A, two- and three-high stacks use **1MMRC125T**. Top socket only—other sockets see ③.

⑤ To change in field from ring to ringless—order **1MMRC200**.

**1MM and 3MM Metering Stack Modules**

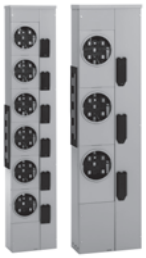

## 1200 A Horizontal Copper Bus—Premium Offering

| Amperes Per Meter Socket | Number of Meter Sockets | Bus Ampacity | Enclosure Type ① | Main Tenant Breaker Type (For Specific Catalog Numbers, Refer to Page V1-T4-118) | Three-Phase In, Single-Phase Out<br>Three-Phase Horizontal Bus (Four Horizontal Busbars—A, B, C and Neutral)<br>Catalog Number |
|---|---|---|---|---|---|
| **Ring Style Meter Socket Covers ②** | | | | | |
| 125 ③ | 2 ④ | 1200 | Indoor/outdoor | Plug-on type<br>BR2_<br>BRH2_<br>BRHH2_<br>BRX2_ | **3MM212R12C** |
| | 3 ④ | 1200 | Indoor/outdoor | | **3MM312R12C** |
| | 4 | 1200 | Indoor/outdoor | | **3MM412R12C** |
| | 5 | 1200 | Indoor/outdoor | | **3MM512R12C** |
| | 6 | 1200 | Indoor/outdoor | | **3MM612R12C** |
| 200 ⑤ | 2 | 1200 | Outdoor | Bolt-on type<br>CCV2_X<br>CCVH2_X<br>CVS2_XMM<br>CV2_XMM<br>CVH2_XMM | **3MM220R12C** |
| | 3 | 1200 | Outdoor | | **3MM320R12C** |
| | 4 | 1200 | Outdoor | | **3MM420R12C** |
| | 5 | 1200 | Outdoor | | **3MM520R12C** |
| **Ringless Style Meter Socket Covers (5th Jaw at 9 o'Clock Standard—Field Adjustable to 3 or 6 o'Clock)** | | | | | |
| 125 | 2 | 1200 | Outdoor | Plug-on type<br>BR2_<br>BRH2_<br>BRHH2_<br>BRX2_ | **3MM212R12RLC** |
| | 3 | 1200 | Outdoor | | **3MM312R12RLC** |
| | 4 | 1200 | Outdoor | | **3MM412R12RLC** |
| | 5 | 1200 | Outdoor | | **3MM512R12RLC** |
| | 6 | 1200 | Outdoor | | **3MM612R12RLC** |
| 200 | 2 | 1200 | Outdoor | Bolt-on type<br>CCV2_X<br>CCVH2_X<br>CVS2_XMM<br>CV2_XMM<br>CVH2_XMM | **3MM220R12RLC** |
| | 3 | 1200 | Outdoor | | **3MM320R12RLC** |
| | 4 | 1200 | Outdoor | | **3MM420R12RLC** |
| | 5 | 1200 | Outdoor | | **3MM520R12RLC** |
| **Ringless Style Covers with Horn Bypass (5th Jaw at 9 o'Clock Standard—Field Adjustable to 3 or 6 o'Clock)** | | | | | |
| 125 | 2 | 1200 | Outdoor | Plug-on type<br>BR2_<br>BRH2_<br>BRHH2_<br>BRX2_ | **3MM212R12RLBC** |
| | 3 | 1200 | Outdoor | | **3MM312R12RLBC** |
| | 4 | 1200 | Outdoor | | **3MM412R12RLBC** |
| | 5 | 1200 | Outdoor | | **3MM512R12RLBC** |
| | 6 | 1200 | Outdoor | | **3MM612R12RLBC** |
| 200 | 2 | 1200 | Outdoor | Bolt-on type<br>CCV2_X<br>CCVH2_X<br>CVS2_XMM<br>CV2_XMM<br>CVH2_XMM | **3MM220R12RLBC** |
| | 3 | 1200 | Outdoor | | **3MM320R12RLBC** |
| | 4 | 1200 | Outdoor | | **3MM420R12RLBC** |
| | 5 | 1200 | Outdoor | | **3MM520R12RLBC** |

## Technical Data and Specifications

### *Wire Sizes—Neutral and Ground Lugs*

- Each stack includes a neutral and ground bar
- If an extra ground bar is needed, order **1MMGBK**

### Wire Sizes—Neutral and Ground Lugs

| Lugs in Meter Socket Modules | Wire Size, Al/Cu |
|---|---|
| Branch neutral—125 A socket module | #6–2/0 kcmil |
| Branch neutral—200 A socket module | #1/0–300 kcmil |
| Equipment ground bar—125 A socket module | #14–#2 kcmil |
| Equipment ground bar—200 A socket module | #14–2/0 kcmil |
| Optional ground bar (**1MMGBK**) | #6–2/0 kcmil |

***Notes***

① For indoor applications where a top endwall with knockouts is needed, order (one) of part number **MM12N1WLK** for each 125 A stack or **MM20N1WLK** for each 200 A stack.

② Reference drawing EUSERC DWG-G1, G2, G3.

③ To change in field from ring to ringless—order **1MMRC125**.

④ To change in field from ring to ringless, the top socket in 125 A, two- and three-high stacks use **1MMRC125T**. Top socket only—other sockets see ③.

⑤ To change in field from ring to ringless—order **1MMRC200**.

## Dimensions

Approximate Dimensions in Inches (mm)

***Modular Metering Stacks—Aluminum and Copper***

### 1MM, 3MM, 125 Amperes



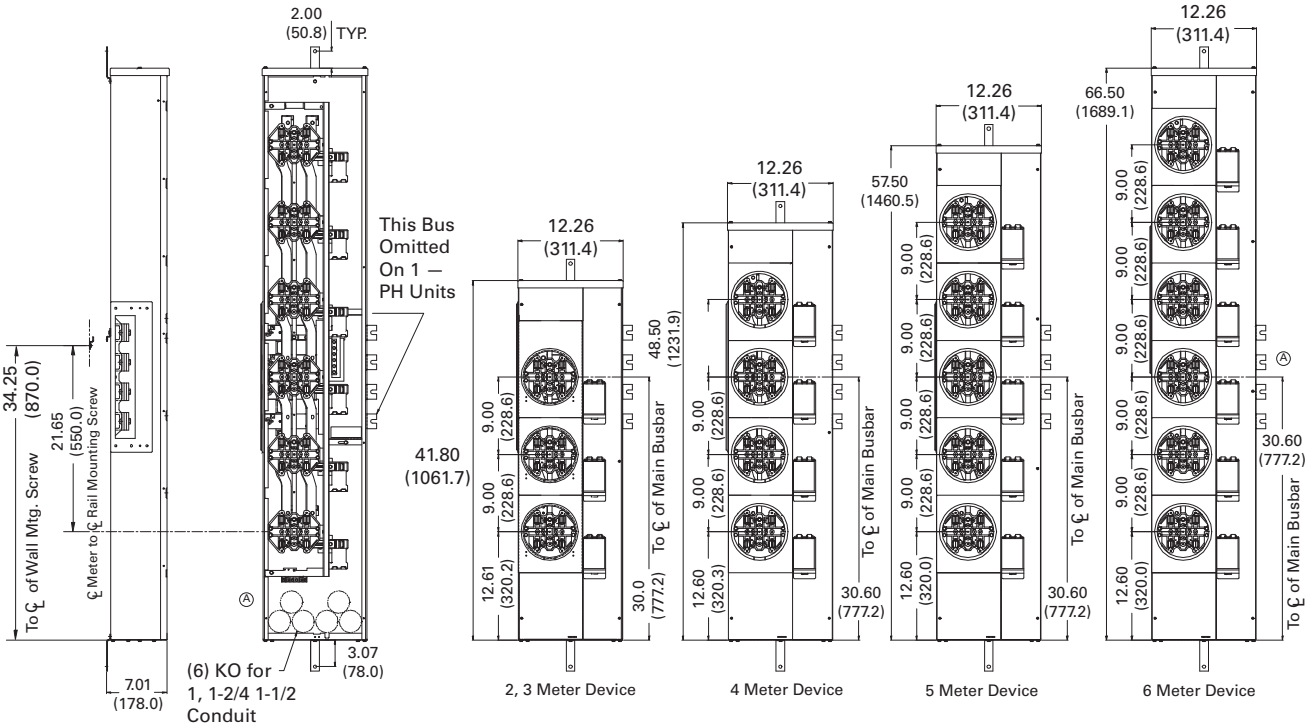


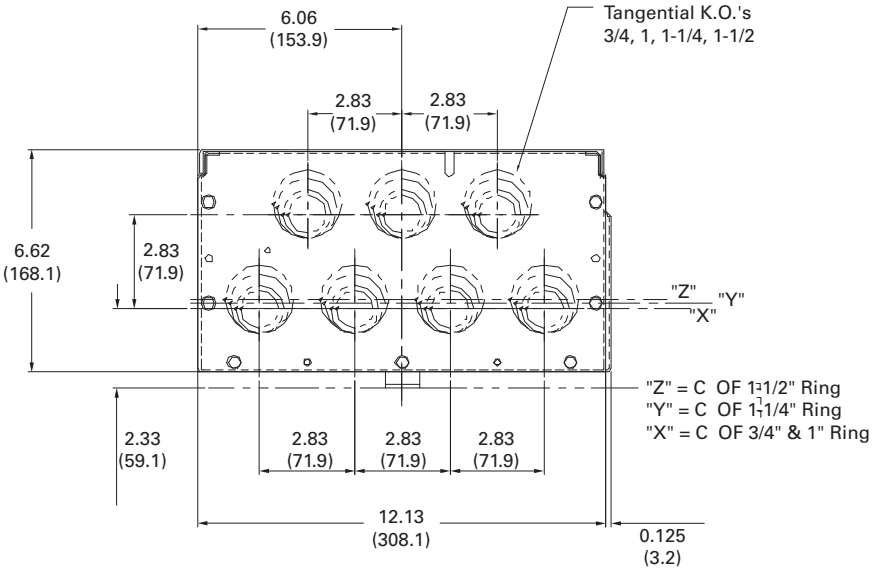


Top End & Bottom End View for NEMA 1;
Bottom End View for NEMA 3R

**Note:** Dimensions Apply to 800 and 1200 Ampere Horizontal Bus.

Approximate Dimensions in Inches (mm)

***Modular Metering Stacks—Aluminum and Copper***

### 1MM, 3MM, 200 Amperes

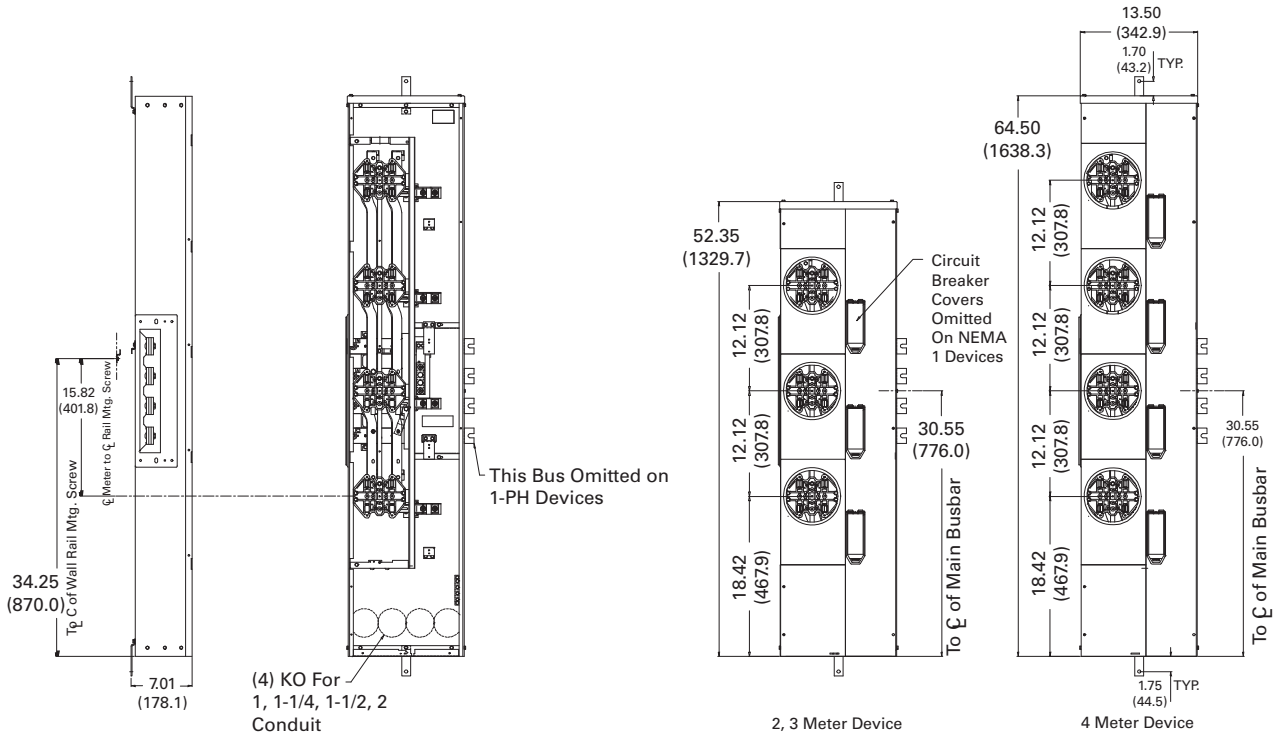


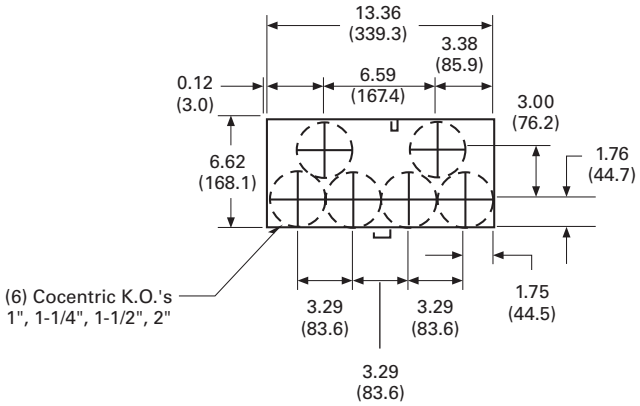


**Bottom View**

**Note:** Dimensions Apply to 800 and 1200 Ampere Horizontal Bus.

Approximate Dimensions in Inches (mm)

### 5-High, 200 Amperes, 1MM and 3MM Metering

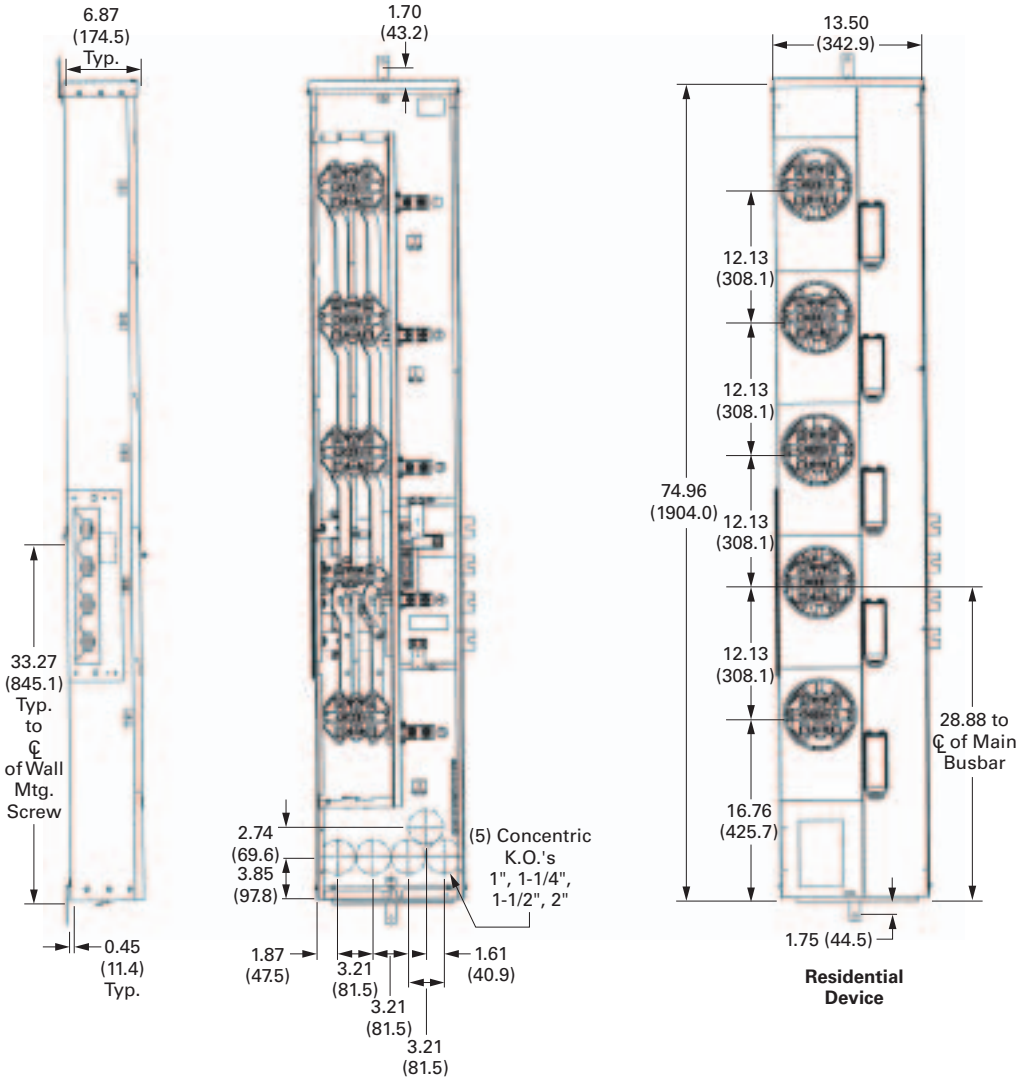


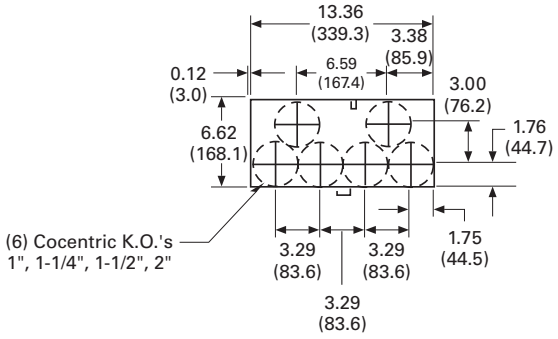


**Note:** The Bussed meter stack device shown on the far right of the figure, must be used on Mains with Busway connections, found on **Pages V1-T4-109** and **V1-T4-113**. Please contact factory for catalog numbers associated with Bussed meter stack devices.

**1MM and 3MM Metering Circuit Breakers**

*CV2200*

## Contents


| *Description* | *Page* |
|---|---|
| Systems for Residential and Commercial Applications | **V1-T4-88** |
| Meter Packs | **V1-T4-90** |
| Type CCV 120/240 V Tenant Main Circuit Breaker | **V1-T4-95** |
| Type CV 120/240 V Tenant Main Circuit Breaker | **V1-T4-96** |
| Meter Packs—1MP, 1MM and 3MM Main Tenant Circuit Breakers | **V1-T4-98** |
| Main Service Modules | **V1-T4-101** |
| Surge Metering | **V1-T4-115** |
| Group Metering Inline Current Transformer Cabinets | **V1-T4-116** |
| Residential Meter Stacks | **V1-T4-118** |
| 1MP, 1MM and 3MM Main Tenant Circuit Breakers | |
| Phase Balanced Stack | **V1-T4-128** |
| Commercial Meter Stack Modules | **V1-T4-129** |
| 35MM, 37MM, 35SS and 37SS Main Tenant Circuit Breakers | **V1-T4-136** |




## 1MP, 1MM and 3MM Main Tenant Circuit Breakers

### Product Description

Specific main tenant circuit breakers that are to be used in meter packs (1MP), residential meter stacks (1MM) and three-phase in single-phase out meter stacks (3MM).

### Product Selection

| Description | Number of Poles | Main Tenant Circuit Breaker Ampere Rating | 10 kAIC Catalog Number ① | 22 kAIC Catalog Number | 25 kAIC Catalog Number ①②③④ | 42 kAIC Catalog Number ②③④ | 65 kAIC Catalog Number ②③④ | 100 kAIC Catalog Number ②③④ |
|---|---|---|---|---|---|---|---|---|
| **Plug-On Type** | | | | | | | | |
| Plug-on type circuit breakers used with 1MP, 1MM, and 3MM 125 A modular metering stacks | 2 | 60 | **BR260** | **BRH260** | — | **BRHH260** | **BRX260** | — |
| | 2 | 70 | **BR270** | **BRH270** | — | **BRHH270** | **BRX270** | — |
| | 2 | 80 | **BR280** | **BRH280** | — | **BRHH280** | **BRX280** | — |
| | 2 | 90 | **BR290** | **BRH290** | — | **BRHH290** | **BRX290** | — |
| | 2 | 100 | **BR2100** | **BRH2100** | — | **BRHH2100** | **BRX2100** | — |
| | 2 | 110 | **BR2110** | **BRH2110** | — | **BRHH2110** | **BRX2110** | — |
| | 2 | 125 | **BR2125** | **BRH2125** | — | **BRHH2125** | **BRX2125** | — |
| **Bolt-On Type** | | | | | | | | |
| Bolt-on type circuit breakers used with 1MP, 1MM, and 3MM 200 A modular metering stacks | 2 | 60 | **CCV2060X** | **CCVH2060X** | **CVS2060XMM** | **CVS2060XMM** | **CV2060XMM** | **CVH2060XMM** |
| | 2 | 70 | **CCV2070X** | **CCVH2070X** | **CVS2070XMM** | **CVS2070XMM** | **CV2070XMM** | **CVH2070XMM** |
| | 2 | 80 | **CCV2080X** | **CCVH2080X** | **CVS2080XMM** | **CVS2080XMM** | **CV2080XMM** | **CVH2080XMM** |
| | 2 | 90 | **CCV2090X** | **CCVH2090X** | **CVS2090XMM** | **CVS2090XMM** | **CV2090XMM** | **CVH2090XMM** |
| | 2 | 100 | **CCV2100X** | — | **CCVH2100X** | **CVS2100XMM** | **CV2100XMM** | **CVH2100XMM** |
| | 2 | 125 | **CCV2125X** | — | **CCVH2125X** | **CVS2125XMM** | **CV2125XMM** | **CVH2125XMM** |
| | 2 | 150 | **CCV2150X** | — | **CCVH2150X** | **CVS2150XMM** | **CV2150XMM** | **CVH2150XMM** |
| | 2 | 175 | **CCV2175X** | — | **CCVH2175X** | **CVS2175XMM** | **CV2175XMM** | **CVH2175XMM** |
| | 2 | 200 | **CCV2200X** | — | **CCVH2200X** | **CVS2200XMM** | **CV2200XMM** | **CVH2200XMM** |

***Notes***

① #2–300 kcmil wire size range for CCV and CCVH tenant main circuit breakers.
② "MM" suffix indicates mounting hardware kit is included as standard with tenant main breaker.
③ 1MMCBK replacement mounting hardware kit. One kit is needed per breaker. Mounting hardware kit ships standard with breaker "MM" suffix offering.
④ #6–4/0 kcmil wire size range for CVS, CV and CVH tenant main circuit breakers. If #2–300 kcmil is needed, order 2TA225CVK. One kit needed per breaker.

## Contents


| *Description* | *Page* |
|---|---|
| Systems for Residential and Commercial Applications | **V1-T4-88** |
| Meter Packs | **V1-T4-90** |
| Type CCV 120/240 V Tenant Main Circuit Breaker | **V1-T4-95** |
| Type CV 120/240 V Tenant Main Circuit Breaker | **V1-T4-96** |
| Meter Packs—1MP, 1MM and 3MM Main Tenant Circuit Breakers | **V1-T4-98** |
| Main Service Modules | **V1-T4-101** |
| Surge Metering | **V1-T4-115** |
| Group Metering Inline Current Transformer Cabinets | **V1-T4-116** |
| Residential Meter Stacks | **V1-T4-118** |
| 1MP, 1MM and 3MM Main Tenant Circuit Breakers | **V1-T4-127** |
| Phase Balanced Stack Commercial Meter Stack Modules | **V1-T4-129** |
| 35MM, 37MM, 35SS and 37SS Main Tenant Circuit Breakers | **V1-T4-136** |


## Phase Balanced Stack

### Product Description

Eaton's Phase Balanced Stack allows for a complete phase balanced metering line-up using fewer stacks. With today's electrical rooms becoming smaller, the need is greater than ever to offer space-saving metering products while providing a fully phase balanced system. The new phase balanced stack is the answer.

Today, achieving a phase balanced system when connected to a 208Y/120 Vac three-phase, four-wire system may require one or two additional 3MM meter modules. Standard 3MM meter stacks come factory connected to phases A and B. The new phase balanced stacks connect the two bottom meters to phases B and C and the top two or three meters to phases A and C. Using these new stacks with the AB phased 3MM metering, phase balancing is accomplished, and more compact than before.

### Features

- Available in four- and five-high configurations at 125 A
- 200 A stacks available
- Available with 800 A aluminum bus and 1200 A copper bus
- Ring, ringless, ringless with horn bypass available
- Outdoor enclosure
- Dimensions same as existing 125 A, three-phase meter stacks

### Product Selection

***Ordering Information***

- Check with local utility for height restrictions
- Items loaded in VISTA
- If you have questions, please contact the Technical Resource Center 1-800-356-1243, option 3

#### Phase Balanced Stack

| Amperes Per Meter Socket | Bus Ampacity | Meter Socket Cover | Catalog Number |
|---|---|---|---|
| 125 | 800 | Ring | **3MM412RACBC** |
| 125 | 800 | Ring | **3MM512RACBC** |
| 125 | 800 | Ringless | **3MM412RRLACBC** |
| 125 | 800 | Ringless | **3MM512RRLACBC** |
| 125 | 800 | Ringless horn bypass | **3MM412RRLBACBC** |
| 125 | 800 | Ringless horn bypass | **3MM512RRLBACBC** |
| 125 | 1200 | Ring | **3MM412R2ACBC** |
| 125 | 1200 | Ring | **3MM512R2ACBC** |
| 125 | 1200 | Ringless | **3MM412R2RLACBC** |
| 125 | 1200 | Ringless | **3MM512R2RLACBC** |
| 125 | 1200 | Ringless horn bypass | **3MM412R2RLBACBC** |
| 125 | 1200 | Ringless horn bypass | **3MM512R2RLBACBC** |

**Note:** Local codes and utility requirements still apply. The phase balance stacks are not suitable for changing in the field.

Commercial Meter Stack Modules (35MM, 37MM, 35SS and 37SS)

*35MM, 37MM, 35SS and 37SS*

## Contents


| *Description* | *Page* |
|---|---|
| Systems for Residential and Commercial Applications | **V1-T4-88** |
| Meter Packs | **V1-T4-90** |
| Type CCV 120/240 V Tenant Main Circuit Breaker | **V1-T4-95** |
| Type CV 120/240 V Tenant Main Circuit Breaker | **V1-T4-96** |
| Meter Packs—1MP, 1MM and 3MM Main Tenant Circuit Breakers | **V1-T4-98** |
| Main Service Modules | **V1-T4-101** |
| Surge Metering | **V1-T4-115** |
| Group Metering Inline Current Transformer Cabinets | **V1-T4-116** |
| Residential Meter Stacks | **V1-T4-118** |
| 1MP, 1MM and 3MM Main Tenant Circuit Breakers | **V1-T4-127** |
| Phase Balanced Stack | **V1-T4-128** |
| Commercial Meter Stack Modules 35MM, 37MM, 35SS and 37SS Main Tenant Circuit Breakers | **V1-T4-136** |




## Commercial Meter Stack Modules

### Product Description

- Heavy-duty lever bypass socket design
- Single-phase or three-phase designs (35 = single-phase, 37 = three-phase)
- Provision for two-pole or three-pole main tenant breakers
- Phase balance kits are included with three-high and four-high modules

### Features, Benefits and Functions

***A. End Walls***

The top cap is removable and does not contain knockouts, so contractors can position and punch holes where they need them. There are numerous KOs in the back and bottom for flexibility.

***B. Ground Bars***

The factory-installed equipment ground bars are provided in both the top and bottom gutters.

***C. Meter Socket***

The 5-jaw meter socket and 7-jaw meter socket includes a built-in manual bypass and jaw release. The ground wire is factory connected in both 35MM and 37MM modules.

***D. Separate Wireway Cover***

If work on the breakers or cables is necessary, it can be accomplished without disturbing the meters or meter covers, thanks to a separate cover that allows easy access to the module's main tenant breaker and wireway section. (Not shown.)

***E. Barrier***

A solid metal barrier separates the meter socket section from the tenant breaker in the wireway section. The unmetered vertical bus is enclosed to guard against power theft.

***F. Neutral Assembly***

Located in the wireway of each module, the assembly permits convenient termination of the neutral conductors.

***G. Enclosed Horizontal Bus***

Non-removable metal barrier encloses 1200 A horizontal bus when passing through the tenant breaker section for added security.

***H. Tenant Breaker Range***

All modules accept 15–225 A bolt-on breakers in various AIC ratings. The CHH_X breaker carries a UL listed series rating of 100,000 A, which allows you to use standard 10 kAIC breakers in downstream loadcenters and panelboards by Eaton.

***I. Indoor/Outdoor Construction***

Raintight caps, meter covers and lockable raintight tenant breaker covers make it convenient for you to use any of our modules on either NEMA 1 or NEMA 3R applications.

***J. Mounting Rail***

Rear mounting rail and wall hanger speed and simplify installation. (Mounting rail not shown.)

***K. Nameplate and Ratings***

The nameplate gives you full rating data: 208Y/120, three-phase, four-wire; 240/120, three-phase, four-wire delta (high leg on B-phase); and 240/120 single-phase. (Not shown.)

***L. Mains and Modules***

Slip together quickly, smoothly with front-accessible captive bolts securing the juncture without removing socket interiors or bus access plate. Main bus joint bolts torque to 25 foot pounds.

### 37MM Meter Stack Module

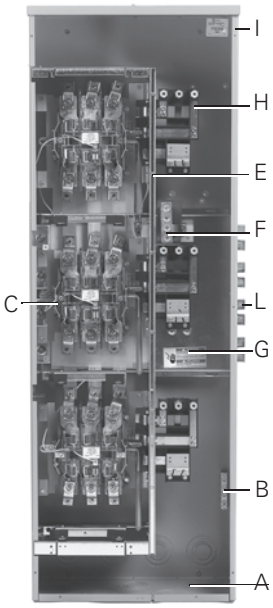


- Eaton's 35MM and 37MM modular metering stacks contain meter sockets with built-in manual bypass and jaw release (Non-EUSERC areas)
- Eaton's 35SS and 37SS stacks use meter sockets with test bypass feature (meets EUSERC electrical requirements)
- All commercial modular metering stacks contain four horizontal cross buses
- Mechanically and electrically built to bolt-up with main service modules and residential modular metering stacks

## Catalog Number Selection

### Commercial Meter Stack Modules

**3 7 MM 1 40 R 12 40 K C**

**Phases**
Three-phase only

**Number of Jaws**
**5** or **7**

**Type of Metering**
**MM** = Commercial metering module
**SS** = Safety socket—EUSERC

**Number of Meters**
**1**, **2**, **3** or **4**

**Socket Amperage**
**20** = 200 A
**40** = 400 A

**Enclosure**
**R** = NEMA 3R

**Bus**
**12** = 1200 A main bus ampacity
**AB** = Phases A&B—EUSERC
**AC** = Phases A&C—EUSERC
**BC** = Phases B&C—EUSERC

**Tenant Breakers**
**40** = 400 A included
**Blank** = Ordered separately

**Socket Type**
**K** = K Base bolt-on socket
**Blank** = Plug-in type socket

**Bus**
**C** = Copper
**Blank** = Aluminum

**When Ordering:**

1. Determine catalog number of Main Service Module.
2. Determine catalog number of Meter Stack (Residential or Commercial).
3. Find quantity and catalog numbers for tenant circuit breakers (found on **Page V1-T4-136**). Order one breaker per socket.
4. If any accessories are needed, order from **Pages V1-T4-138** and **V1-T4-139**.

## Product Selection

### *35MM*

- Each socket is a 5 terminal block with lever bypass and jaw release
- Ringless covers
- Provision for two-pole main tenant breakers (circuit breakers not included). For circuit breaker catalog numbers, refer to **Page V1-T4-136**
- Phase balancing kits are included with three-high and four-high modules. Each individual socket can be phase balanced in the field to the desired lines (A-B, B-C or A-C). Comes from factory as A-B
- Indoor/outdoor construction
- Main tenant feeders can exit top, bottom or back
- If being used in outdoor application and exiting the top, mount Myer type hubs on rainproof cap
- Short-circuit ratings up to 100 A rms symmetrical depending upon the kAIC rating of installed main tenant circuit breakers and main device
- Non-EUSERC areas

### 35MM—Single-Phase Commercial Meter Stack Modules (Three-Phase In, Single-Phase Out)

| System Voltage | Ampere Rating Per Meter Socket | Number of Meter Sockets | Horizontal Bus Ampacity/ Material | Number of Jaws Per Meter Socket | Main Tenant Breaker Type (Page V1-T4-136) ① | Catalog Number |
|---|---|---|---|---|---|---|
| 120/240 V, single-phase, three-wire systems and 208Y/120 V network metering (Not suitable for use on three-phase, four-wire delta systems) | 225 | 1 | 1200 Al | 5 | Bolt-on type EHD2_ CCV2_X CCVH2_X CVS2_XMM CV2_XMM CVH2_XMM | **35MM120R12** |
| | | 1 | 1200 Cu | 5 | | **35MM120R12C** |
| | | 2 | 1200 Al | 5 | | **35MM220R12** |
| | | 2 | 1200 Cu | 5 | | **35MM220R12C** |
| | | 3 | 1200 Al | 5 | | **35MM320R12** |
| | | 3 | 1200 Cu | 5 | | **35MM320R12C** |
| | | 4 | 1200 Al | 5 | | **35MM420R12** |
| | | 4 | 1200 Cu | 5 | | **35MM420R12C** |
| | 400 | 1 | 1200 Al | 5 | 400 A K-Frame included | **35MM140R1240** ② |
| | | 1 | 1200 Cu | 5 | | **35MM140R1240C** ② |
| | 400 | 1 | 1200 Al | 5 | 400 A K-Frame included | **35MM140HR1240** ③ |
| | | 1 | 1200 Cu | 5 | | **35MM140HR1240C** ③ |
| | 400 | 2 | 1200 Al | 5 | 400 A K-Frame included | **35MM240R1240** |
| | | 2 | 1200 Cu | 5 | | **35MM240R1240C** |
| | 400 continuous | 1 | 1200 Cu | 5 | 400 A L-Frame included | **35MM140R1240K** |
| | 400 continuous | 1 | 1200 Cu | 5 | 400 A L-Frame included | **35MM140HR1240KC** ④ |

***Notes***

① Retrofit tenant circuit breaker mounting kit (**37MMRCBK**) for installation of Type EHD and CV breakers. Needed only for stacks manufactured prior to February 2013. Order one kit per breaker.
② Unit is bottom exit only.
③ Rated at 100 kAIC.
④ Rated at 35 kAIC.

***37MM***

- Each socket is a 7 terminal block with lever bypass and jaw release
- Ringless covers
- Provision for three-pole main tenant breakers (circuit breakers not included). For circuit breaker catalog numbers, refer to **Page V1-T4-136**
- Indoor/outdoor construction
- Main tenant breakers can exit top, bottom or back
- If being used in outdoor application and exiting the top, mount Myer type hubs on rainproof cap
- Short-circuit ratings up to 100 A rms symmetrical depending upon the kAIC rating of installed main tenant circuit breakers and main device
- Non-EUSERC areas

## 37MM—Three-Phase Commercial Meter Stack Modules (Three-Phase In, Three-Phase Out)

| System Voltage | Ampere Rating Per Meter Socket | Number of Meter Sockets | Horizontal Bus Ampacity/ Material | Number of Jaws Per Meter Socket ① | Main Tenant Breaker Type ② (Page V1-T4-136) | Catalog Number |
|---|---|---|---|---|---|---|
| 208Y/120 V, three-phase, four-wire<br>240/120 V, three-phase, four-wire delta<br>(B-phase is high leg) | 225 | 1 | 1200 Al | 7 | Bolt-on type<br>EHD3_<br>CC3_X<br>CVS3_X<br>CV3_X<br>CVH3_X | **37MM120R12** |
| | | 1 | 1200 Cu | 7 | | **37MM120R12C** |
| | | 2 | 1200 Al | 7 | | **37MM220R12** |
| | | 2 | 1200 Cu | 7 | | **37MM220R12C** |
| | | 3 | 1200 Al | 7 | | **37MM320R12** |
| | | 3 | 1200 Cu | 7 | | **37MM320R12C** |
| | | 4 | 1200 Al | 7 | | **37MM420R12** |
| | | 4 | 1200 Cu | 7 | | **37MM420R12C** |
| | 400 | 1 | 1200 Al | 7 | Bolt-on type<br>EHD3_<br>CC3_X<br>CVS3_X<br>CV3_X<br>CVH3_X | **37MM140R12** ③ |
| | | 1 | 1200 Cu | 7 | | **37MM140R12C** ③ |
| | 400 | 1 | 1200 Al | 7 | 400 A<br>K-Frame included | **37MM140R1240** ④ |
| | | 1 | 1200 Cu | 7 | | **37MM140R1240C** ④ |
| | 400 | 1 | 1200 Al | 7 | 400 A<br>K-Frame included | **37MM140HR1240** ⑤ |
| | | 1 | 1200 Cu | 7 | | **37MM140HR1240C** ⑤ |
| | 400 | 2 | 1200 Al | 7 | 400 A<br>K-Frame included | **37MM240R1240** |
| | | 2 | 1200 Cu | 7 | | **37MM240R1240C** |
| | 400 continuous | 1 | 1200 Cu | 7 | 400 A<br>L-Frame included | **37MM140R1240KC** ⑥ |
| | 400 continuous | 1 | 1200 Cu | 7 | 400 A<br>L-Frame included | **37MM140HR1240KC** ⑦ |

***Notes***

① If a socket in a 37MM meter stack module needs to be single-phase, order **37MM1CK**. This will convert the three-phase socket to single-phase.
② Retrofit tenant circuit breaker mounting kit (**37MMRCBK**) for installation of Type EHD and CV breakers. Needed only for stacks manufactured prior to February 2013. Order one kit per breaker.
③ 320 A continuous rated socket with provisions for two main tenant breakers.
④ Unit is bottom exit only.
⑤ Rated at 100 kAIC.
⑥ Rated at 25 kAIC.
⑦ Rated at 35 kAIC.

### *35SS*

- Sockets include EUSERC required test-bypass-disconnect feature
- Ring type covers
- Single-phase units have provisions for two-pole main tenant breakers
- When applying 35SS (single-phase) stacks on 208Y/120 V, three-phase, four-wire and 240/120 V, three-phase, four-wire delta systems, refer to suffixes for proper phase balancing. Each meter stack module is phase balanced at the plant (A-B, B-C or A-C) and cannot be field modified
- Indoor/outdoor construction
- Main tenant breakers can exit top, bottom or back. If being used in outdoor application and exiting the top, mount Myer type hubs on rainproof cap
- Short-circuit ratings up to 100 A rms symmetrical depending upon the kAIC rating of installed main tenant circuit breakers and main device

**35SS_**

### 35SS—Three-Phase Commercial Meter Stack Modules ①

| System Voltage | Ampere Rating Per Meter Socket | Number of Meter Sockets | Horizontal Bus Ampacity/ Material | Number of Jaws Per Meter Socket | Main Tenant Breaker Type ② (Page V1-T4-136) | Catalog Number |
|---|---|---|---|---|---|---|
| 120/240 V, single-phase, three-wire systems and 208Y/120 V network metering (Not suitable for use on three-phase, four-wire delta systems) | 225 | 1 | 1200 Al | 5 | Bolt-on type EHD2_ CCV2_X CCVH2_X CVS2_X CV2_X CVH2_X | **35SS120RAB** ③ |
| | | | 1200 Cu | 5 | | **35SS120RABC** ③ |
| | | | 1200 Al | 5 | | **35SS120RAC** ③ |
| | | | 1200 Cu | 5 | | **35SS120RACC** ③ |
| | | | 1200 Al | 5 | | **35SS120RBC** ③ |
| | | | 1200 Cu | 5 | | **35SS120RBCC** ③ |
| | | 2 | 1200 Al | 5 | | **35SS220RAB** ③ |
| | | | 1200 Cu | 5 | | **35SS220RABC** ③ |
| | | | 1200 Al | 5 | | **35SS220RAC** ③ |
| | | | 1200 Cu | 5 | | **35SS220RACC** ③ |
| | | | 1200 Al | 5 | | **35SS220RBC** ③ |
| | | | 1200 Cu | 5 | | **35SS220RBCC** ③ |
| | | 3 | 1200 Al | 5 | | **35SS320RAB** ③ |
| | | | 1200 Cu | 5 | | **35SS320RABC** ③ |
| | | | 1200 Al | 5 | | **35SS320RAC** ③ |
| | | | 1200 Cu | 5 | | **35SS320RACC** ③ |
| | | | 1200 Al | 5 | | **35SS320RBC** ③ |
| | | | 1200 Cu | 5 | | **35SS320RBCC** ③ |

### *37SS*

- Sockets include EUSERC required test-bypass-disconnect feature
- Ring type covers
- Three-phase units have provisions for three-pole main tenant breaker
- Aluminum horizontal bus supplied as standard

### 37SS—Three-Phase Commercial Meter Stack Modules ①

| System Voltage | Ampere Rating Per Meter Socket | Number of Meter Sockets | Horizontal Bus Ampacity/ Material | Number of Jaws Per Meter Socket | Main Tenant Breaker Type ② (Page V1-T4-136) | Catalog Number |
|---|---|---|---|---|---|---|
| 208Y/120 V, three-phase, four-wire 240/120 V, three-phase, four-wire delta (B-phase is high leg) | 225 | 1 | 1200 Al | 7 | Bolt-on type EHD3_ CC3_X CVS3_X CV3_X CVH3_X | **37SS120R** |
| | | | 1200 Cu | 7 | | **37SS120RC** |
| | | 2 | 1200 Al | 7 | | **37SS220R** |
| | | | 1200 Cu | 7 | | **37SS220RC** |
| | | 3 | 1200 Al | 7 | | **37SS320R** |
| | | | 1200 Cu | 7 | | **37SS320RC** |

***Notes***

① Reference drawing EUSERC DWG-304 for 100 A; Reference drawing EUSERC DWG-305 for 200 A.

② Retrofit tenant circuit breaker mounting kit (**37MMRCBK**) for installation of Type EHD and CV breakers. Needed only for stacks manufactured prior to February 2013. Order one kit per breaker.

③ Last two digits of catalog number indicate phase balancing (AB indicates all sockets in this stack are connected to phases A and B only).

Approximate Dimensions in Inches (mm)

***Commercial Stacks (35MM and 37MM)***

### 35MM and 37MM



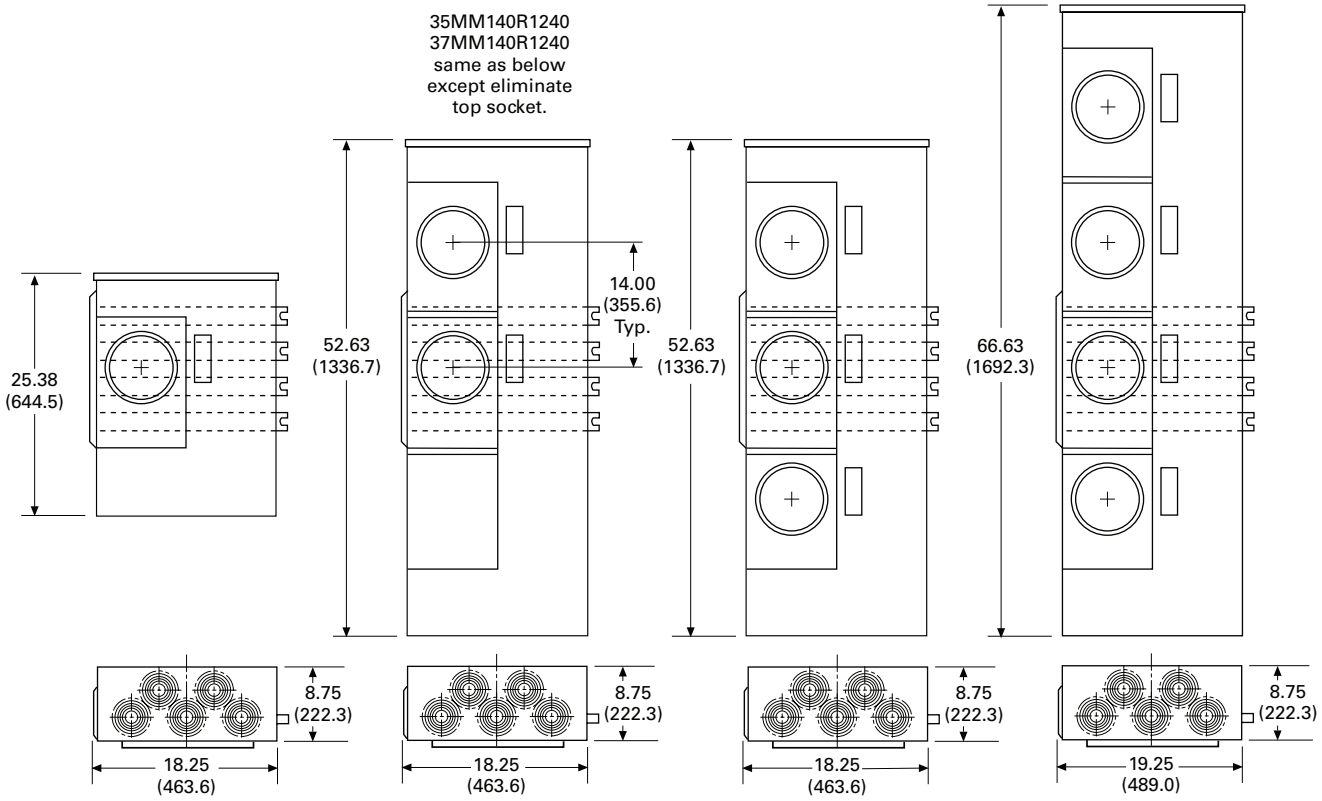

Approximate Dimensions in Inches (mm)

***Commercial Stacks (35SS and 37SS)***

### 35SS and 37SS

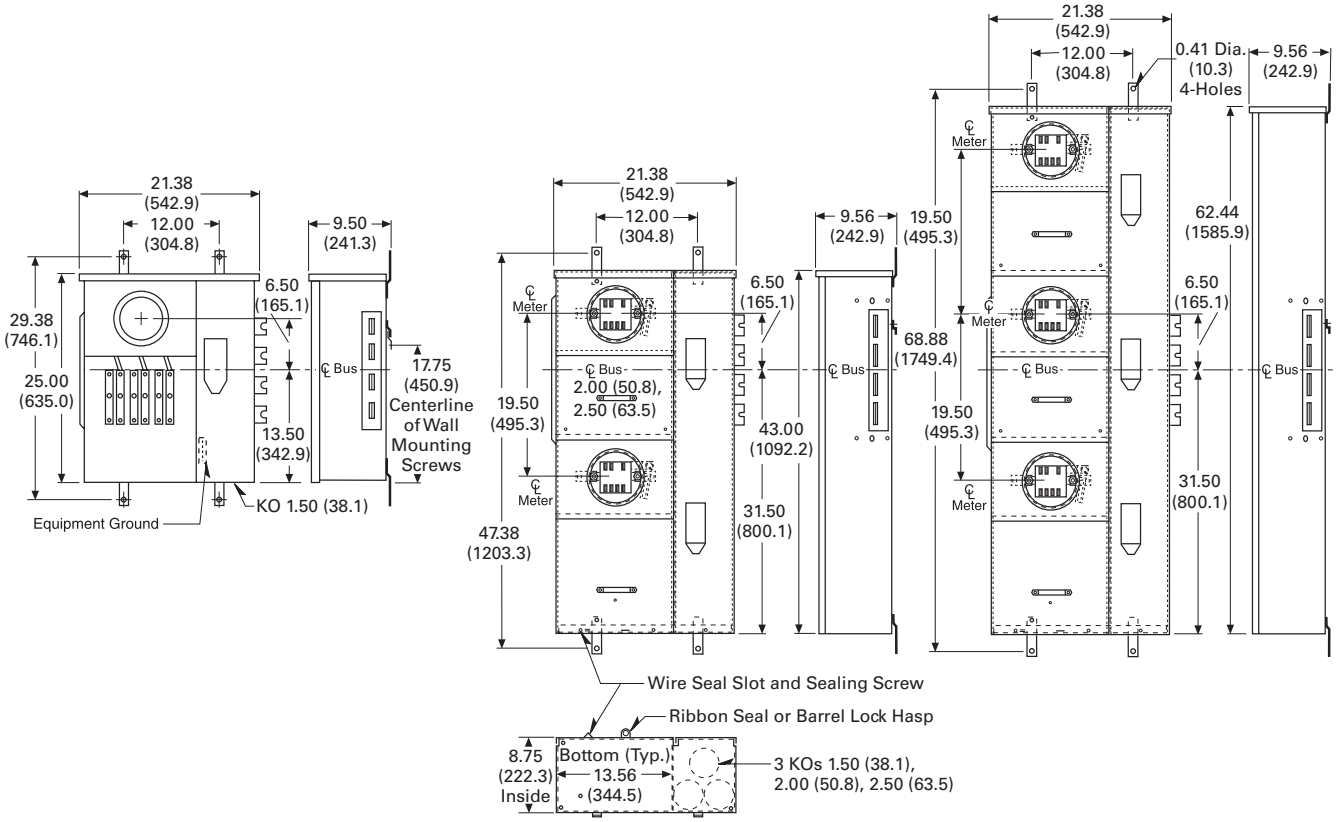

35MM, 37MM, 35SS and 37SS Main Tenant Circuit Breakers

*CV2200/CV3200*

## Contents


| *Description* | *Page* |
|---|---|
| Systems for Residential and Commercial Applications | **V1-T4-88** |
| Meter Packs | **V1-T4-90** |
| Type CCV 120/240 V Tenant Main Circuit Breaker | **V1-T4-95** |
| Type CV 120/240 V Tenant Main Circuit Breaker | **V1-T4-96** |
| Meter Packs—1MP, 1MM and 3MM Main Tenant Circuit Breakers | **V1-T4-98** |
| Main Service Modules | **V1-T4-101** |
| Surge Metering | **V1-T4-115** |
| Group Metering Inline Current Transformer Cabinets | **V1-T4-116** |
| Residential Meter Stacks | **V1-T4-118** |
| 1MP, 1MM and 3MM Main Tenant Circuit Breakers | **V1-T4-127** |
| Phase Balanced Stack | **V1-T4-128** |
| Commercial Meter Stack Modules | **V1-T4-129** |
| 35MM, 37MM, 35SS and 37SS Main Tenant Circuit Breakers | |


## 35MM, 37MM, 35SS and 37SS Main Tenant Circuit Breakers

### Product Description

- The following breakers are to be used on 35MM, 37MM, 35SS and 37SS modular metering stacks
- Series rating information available on **Pages V1-T4-144** through **V1-T4-147**
- Two-pole breakers are 120/240 Vac, field installed
- Three-pole breakers are 208Y/120 Vac, field installed

## Product Selection

### 35MM, 37MM, 35SS and 37SS Main Tenant Circuit Breakers

| Description | Number of Poles | Main Tenant Circuit Breaker Ampere Rating | 10 kAIC Catalog Number | 25 kAIC Catalog Number ①② | 42 kAIC Catalog Number ①② | 65 kAIC Catalog Number ①② | 100 kAIC Catalog Number ①② |
|---|---|---|---|---|---|---|---|
| **Bolt-On Type** | | | | | | | |
| Bolt-on type circuit breakers used with 35MM and 35SS (single-phase modular metering stacks) ③④ | 2 | 60 | **CCV2060X** | **CCVH2060X** | **CVS2060XMM** | **CV2060XMM** | **CVH2060XMM** |
| | 2 | 70 | **CCV2070X** | **CCVH2070X** | **CVS2070XMM** | **CV2070XMM** | **CVH2070XMM** |
| | 2 | 80 | **CCV2080X** | **CCVH2080X** | **CVS2080XMM** | **CV2080XMM** | **CVH2080XMM** |
| | 2 | 90 | **CCV2090X** | **CCVH2090X** | **CVS2090XMM** | **CV2090XMM** | **CVH2090XMM** |
| | 2 | 100 | **CCV2100X** | **CCVH2100X** | **CVS2100XMM** | **CV2100XMM** | **CVH2100XMM** |
| | 2 | 125 | **CCV2125X** | **CCVH2125X** | **CVS2125XMM** | **CV2125XMM** | **CVH2125XMM** |
| | 2 | 150 | **CCV2150X** | **CCVH2150X** | **CVS2150XMM** | **CV2150XMM** | **CVH2150XMM** |
| | 2 | 175 | **CCV2175X** | **CCVH2175X** | **CVS2175XMM** | **CV2175XMM** | **CVH2175XMM** |
| | 2 | 200 | **CCV2200X** | **CCVH2200X** | **CVS2200XMM** | **CV2200XMM** | **CVH2200XMM** |
| | 2 | 225 | **CCV2225X** | **CCVH2225X** | **CVS2225XMM** | **CV2225XMM** | **CVH2225XMM** |
| **Bolt-On Type** | | | | | | | |
| Bolt-on type circuit breakers used with 37MM and 37SS (three-phase modular metering stacks) ③④ | 3 | 60 | **EHD3060** | **CVS3060X** | **CVS3060X** | **CV3060X** | **CVH3060X** |
| | 3 | 70 | **EHD3070** | **CVS3070X** | **CVS3070X** | **CV3070X** | **CVH3070X** |
| | 3 | 80 | **EHD3080** | **CVS3080X** | **CVS3080X** | **CV3080X** | **CVH3080X** |
| | 3 | 90 | **EHD3090** | **CVS3090X** | **CVS3090X** | **CV3090X** | **CVH3090X** |
| | 3 | 100 | **CC3100X** | **CVS3100X** | **CVS3100X** | **CV3100X** | **CVH3100X** |
| | 3 | 125 | **CC3125X** | **CVS3125X** | **CVS3125X** | **CV3125X** | **CVH3125X** |
| | 3 | 150 | **CC3150X** | **CVS3150X** | **CVS3150X** | **CV3150X** | **CVH3150X** |
| | 3 | 175 | **CC3175X** | **CVS3175X** | **CVS3175X** | **CV3175X** | **CVH3175X** |
| | 3 | 200 | **CC3200X** | **CVS3200X** | **CVS3200X** | **CV3200X** | **CVH3200X** |
| | 3 | 225 | **CC3225X** | **CVS3225X** | **CVS3225X** | **CV3225X** | **CVH3225X** |

***Notes***

① #6–4/0 kcmil wire size range for CVS, CV and CVH tenant main circuit breakers. If #2–300 kcmil is needed, order **2TA225CVK** (two-pole) **3TA225CVK** (three-pole). One kit is needed per breaker.

② "MM" suffix provides mounting hardware needed for 1MP, 1MM and 3MM modular metering stacks only. Mounting hardware is not needed for use in 35MM and 35SS modular metering stacks, but is included as standard with breakers.

③ Retrofit tenant circuit breaker mounting kit (**37MMRCBK**) for installation of Type EHD and CV breakers. Needed only for stacks manufactured prior to February 2013. Order one kit per breaker.

④ Type EHD main tenant circuit breakers are also available from 15 to 50 A.

## Accessories

### 1MP, 1MM and 3MM Modular Metering Stacks

| | Description | Application | Catalog Number |
|---|---|---|---|
| **Fifth Jaw Kit** | Fifth jaw kit | Bolted onto neutral in the 3, 6 or 9 o'clock position. Typically used on network metering systems (three-phase in/single-phase out) or when specified by utility company. | **1MM5JK** |
| | Isolated fifth jaw kit | Connects to the neutral with an insolated wire. | **1MM5JKOP** |
| **Manual Bypass Kit** | Manual bypass kit (ring style socket only) | For use with 125 A sockets only. (Not top socket.) | **1MMBPM125** |
| | | For use with 200 A sockets only. (Not top socket.) | **1MMBPM200** |
| | | This kit only to be used for top position of two- and three-high 125 A 1MM and 3MM stacks and of 2, 5 and six-position 125 A 1MP packs. | **1MMBPM125T** |
| | | This kit only to be used for top position of 200 A two-position 1MP packs. | **1MMBPM200T** |
| **Horn Bypass Kit** | Horn bypass | Used only on ringless cover stacks, kits can be installed on 125 A or 200 A sockets. | **1MMBPH** |
| | | **Note:** For **1MP2122RRL** use: | **WCG8HB** ① |
| | Meter bypass jumper | Installed on 125 A or 200 A sockets. Jumpers are plugged into jaws. Order Lexan® cover plate with bypass jumpers to prevent access to meter socket once energized. (Not UL listed.) | **1MMBPJ** |
| **Lexan Blank Cover** | Lexan blank cover | Circular cover mounted on ring or ringless devices preventing access to meter socket while meter is not in place. Includes four plastic tabs that plug into each jaw. | **1MMPCP** |
| | | Same as **1MMPCP** minus the tabs located in the back to plug into jaws. This device to be used while meter bypass jumpers are in place (**1MMBPJ**). | **1MMACP** |
| | Blank meter socket cover | Used for 125 A stacks. Fits bottom socket only. Kit replaces existing meter cover preventing access to meter socket. Includes hasp for seal. | **1MMBC125B** |
| | | Used on 200 A stacks. Fits bottom socket only. Kit replaces existing meter cover preventing access to meter socket. Includes hasp for seal. | **1MMBC200B** |
| **Wall Mounting Rail** | Wall mounting rail | Rails are 4 feet (1.2m) in length. Bolted on wall for stacks, packs and mains to be hung. | **1MMWB** |
| **Bussed Spacer** | Bussed spacer | Bussed spacer 1200 A 4-inch (101.6 mm). Required when stacks are mounted on right-hand side in EUSERC areas. (copper) | **3MMBSK** ② |
| | Bus duct riser/ meter center connection | Available in 400, 600, 800 A main fusible units only. Contact product line for details. | — |

***Notes***

① WCG8HB only applies to meter packs built prior to 1998. Current meter packs use **1MMBPH**.

② Must be used when mounting MCB main next to an MTB main or another MCB main device.

## Accessories for 1MP, 1MM and 3MM Modular Metering Stacks, continued

**Indoor Corner Elbow**

**Standard Sealing Ring**

| Description | Application | Catalog Number |
|---|---|---|
| Indoor corner elbow (copper) | 12-inch (304.8 mm) indoor corner elbow, 1200 A, three-phase, four-wire for use with 1MM and 3MM only. **Do not use with 35MM, 37MM, 35SS or 37SS stacks.** 12-inch corner elbow not EUSERC approved. | **3MMEB12** |
| Indoor corner elbow (copper) | 16-inch (406.4 mm) indoor corner elbow, 1200 A, three-phase, four-wire for use with 1MM, 3MM, 35MM, 37MM, 35SS and 37SS. | **3MMEB16** |
| Barrier | Barrier for individual sockets | **1MMBK** |
| Meter jumper and cover | Combination meter jumper and cover (200 A maximum). Used to jumper line and load jaws as well as cover meter socket preventing exposure to current carrying parts. | **1MMJCK** |
| Lug block | 125 A two-pole lug block assembly. | **BRSF125** |
| Sealing ring | Stainless steel screw type with brass screw | **1MMSR1** |
| | Standard (included with packs and stacks) ① | **1MMSR2** |
| | Stainless steel screw type with cast zinc screw | **1MMSR4** |
| | Aluminum screw type with locking provisions | **1MMSR5** |
| Top endwall | 125 A, NEMA 1 top end wall with knockouts for 1MM, 3MM meter stacks | **MM12N1WLK** |
| | 200 A, NEMA 1 top end wall for 1MM, 3MM meter stacks | **MM20N1WLK** |

***Note***

① Aluminum Snap Type.

***Renewal Parts***

## 1MP, 1MM and 3MM Replacement Parts

| | Description | Application | Catalog Number |
|---|---|---|---|
| **Ringless Cover** | Ringless cover (can install this to go from ring to ringless) | Installed on 125 A socket for ringless security | **1MMRC125** |
| | | Installed on 200 A socket for ringless security | **1MMRC200** |
| | | For use with top position of 125 A, two- and three-position,1MM and 3MM stacks and two-, five- and six-position 1MP packs | **1MMRC125T** |
| | | Top-position two position IMP | **1MMRC200T** |
| **Ring Cover** | Ring cover | Installed on 125 A socket for ring security | **1MMCP1** |
| | | Installed on 200 A socket for ring security | **1MMCP2** |
| | | Top socket ring cover 125 A | **1MMCP1T** |
| | | Top socket ring cover 200 A | **1MMCP2T** |
| **Tenent Breaker Cover** | Tenant breaker hinged cover | 125 A cover | **1MMBC1** |
| | | 200 A cover | **1MMBC2** |
| **Meter Socket** | Meter socket ① | 125 and 200 A | **1MMMS** |
| | Busbar end cap | Flat—left side | **47-24139A** |
| | | Bump—right side | **47-28172-2A** |
| | Main circuit breaker cover kit (black) | | **49-7060** |

***Notes***

① Meter Packs **1MP2122RRL** and **1MP2122RRLB** use different meter sockets. See Renewal Parts listing RP.32A.01A.T.E for details.

See **RP00501001E** for a complete Renewal Parts listing.

## Accessories for 35MM and 37MM Modular Metering Stacks

| | Description | Application | Catalog Number |
|---|---|---|---|
| | Wall mounting rail | Rails are 4 feet (1.2m) in length. Bolted on wall for stacks, packs and mains to be hung. | **1MMWB** |
| | Indoor corner elbow (copper) | 16-inch (406.4 mm) indoor corner elbow, 1200 A, three-phase, four-wire for use with 1MM, 3MM, 35MM, 37MM, 35SS and 37SS. | **3MMEB16** |
| | Handle insulator | Each meter block includes a lever bypass. This kit includes the sleeve which slides onto the lever handle. | **37MMHC** |
| **Barrel Lock Bracket Kit** | Barrel lock bracket kit | Needed when using barrel lock security. | **37MMBLK** |
| **Totalizing Jumper Kit** | Totalizing jumper kit | Used if one socket is to meter two tenant feeds. When ordering jumper kit, should also order a plastic cover plate (**1MMPCP + IMMJCK**) preventing access to live parts on unused socket. | **37MMTJK** |
| **Type EHD and CV Breaker Retrofit Mounting Kit** | Type EHD and CV breaker retrofit mounting kit | Retrofit mounting hardware for installation of Type EHD and CV breakers in 35MM, 37SS, 37MM and 37SS meter stacks manufactured prior to February 2013. Order one kit per breaker. | **37MMRCBK** |
| **Type CV Breaker Mounting Kit** | Type CV breaker mounting kit | Replacement Type CV breaker mounting hardware kit. Used in 200 A 1MP/1MM/3MM modular metering stacks at 42, 65 and 100 kAIC. | **1MMCBK** |
| **Blank Cover Kit** | Blank cover kit | Kit replaces meter cover preventing access to socket. | **37MMCK** ① |
| | | | **37MMCKA** ② |
| | Barrier | Barrier for individual sockets | **37MMBK** |
| **Three-Phase to Single-Phase Conversion Kit** | Three-Phase to single-phase conversion kit | This kit will convert one three-phase meter socket (37MM devices) to a single-phase socket. Only needed if phasing A-C or C-B. If single-phase socket is to be phased A-B, kit is not required for field conversion. (Must use three-phase breaker.) | **37MM1CK** |
| | Bus duct riser/meter center connection | Available in 400, 600, 800 A Main fusible units and 400, 600, 800, 1000, 1200 main circuit breaker. Contact product line for details. | — |
| | Anti-inversion clip | This clip should be inserted into upper right hand jaw of a 320 A meter socket. The purpose is prevent a 200 A meter from being inserted into a 320 A meter socket. | **37MMINVCLIP** |

***Notes***

① For all units made 10/2002 and earlier.

② For all units made after 11/2002.

***Renewal Parts***

## 35MM and 37MM Modular Metering Stacks

| | Description | Application | Catalog Number |
|---|---|---|---|
| **35MM Replacement Meter Socket** | 35MM replacement meter socket | To replace meter socket with lever bypass and jaw release. | **MSLMSA1** |
| | 37MM replacement meter socket | To replace meter socket with lever bypass and jaw release. | **MSLMSA2** |
| **37SS Replacement Meter Socket** | 35SS replacement meter socket | To replace meter socket with test bypass disconnect feature | **MSTMSA1** |
| | 37SS replacement meter socket | To replace meter socket with test bypass disconnect feature | **MSTMSA2** |
| | Safety socket meter cover assembly | To replace ring type cover over the meter prior to 7/1/02. | **MSTMCVR1** |
| | Safety socket meter cover assembly | To replace ring type cover over the meter after 7/1/02 | **MSTMCVR1E** |
| **Meter Cover Assembly** 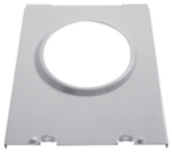 | 35MM and 37MM meter cover assembly | Prior to 12/1/02 | **37MMSK** |
| | | After 12/1/02 | **37MMSK1** |
| | Meter cover assembly with NJ latch | To replace ringless cover over the meter. Includes New Jersey latch requirement. | **37MMSKNJ** |
| | Tenant breaker hinged cover | To replace cover over tenant breakers. | **1MMBC2** |
| | Busbar end cap | Flat—left side | **47-24139A** |
| | | Bump—right side | **47-28172-2A** |
| | Main circuit breaker cover/CIT (black) | | **49-7060** |

***Note***

See **RP.32A.01.T.E** for a complete Renewal Parts listing.

## Technical Data and Specifications

### *Phase Balancing*

All 3MM meter modules come factory connected to phase A and B, per Figure A. When connected to a 208Y/120 Vac three-phase, four-wire system, field phase balancing of two out of every three stacks is required. One of every three stacks should be phased AC, per Figure B, and one of every three stacks should be phased CB, per Figure C.

**Examples:**

**Nine Total Positions**—use (three) three-position stacks and phase one per Figure B (A-C phasing) and one per Figure C (C-B phasing).

**16 Total Positions**—use (two) five-position and (two) three-position stacks. Phase balance (one) five-position per Figure B (A-C phasing) and (one) five-position per Figure C (C-B phasing).

**19 Total Positions**—where four-position maximum height is allowed by utility. Use (one) four-position and (five) three-position stacks. Phase balance (two) three-position stacks per Figure B (A-C phasing) and (two) three-position stacks per Figure C (C-B phasing).

### "Z" Shaped and "Barrel" Shaped Phase Connector

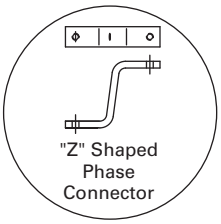


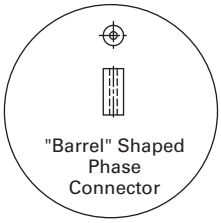


### Phase Balancing

| | 125 A STACKS | 200 A STACKS |
|---|---|---|
| FIGURE A | 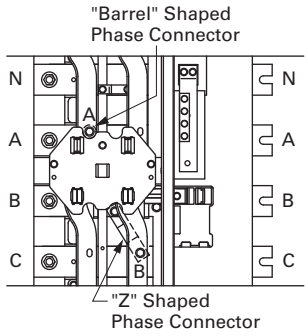  **FACTORY 125 A A-B PHASING** | 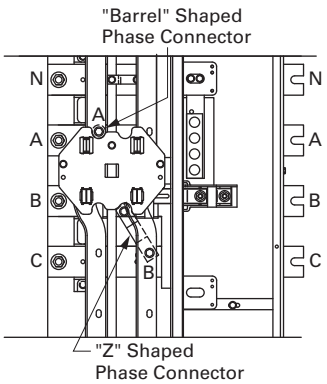  **FACTORY 200 A A-B PHASING** |
| FIGURE B | 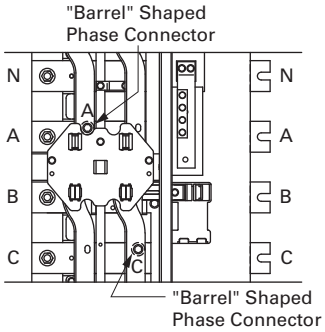  **FIELD 125 A A-C PHASING**<br>Remove "Z" Phase Jumper from "B" Phase Horizontal Bus<br>Replace with "Barrel" Phase Jumper from kit 99-4184<br>Supplied with Meter Stack and attach to "C" Phase Bus as shown.<br>Torque to 60 lb-in (6.78 N-M)<br>Retain "Z" Phase Jumper for future use. | 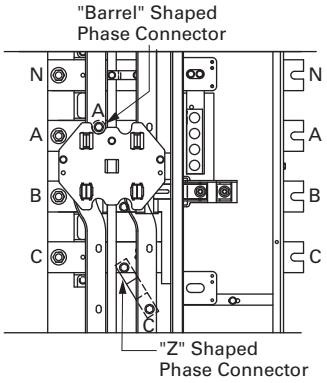  **FACTORY 200 A A-C PHASING**<br>Remove "Z" Phase Jumper from "B" Phase Horizontal Bus<br>Reattached at "C" Phase Horizontal Bus as Shown.<br>Torque to 60 lb-in (6.78 N-M) |
| FIGURE C | 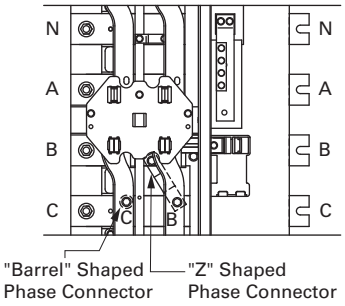  **FIELD 125 A C-B PHASING**<br>Remove "Barrel" Phase Jumper from "A" Phase Horizontal Bus<br>Reattached at "C" Phase Horizontal Bus as shown.<br>Torque to 60 lb-in (6.78 N-M) | 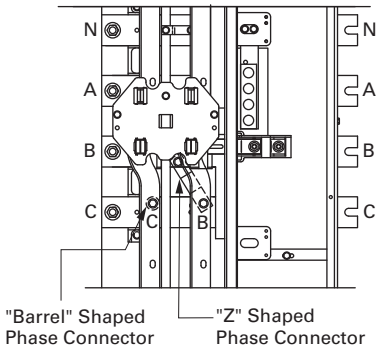  **FACTORY 200 A C-B PHASING**<br>Remove "Barrel" Phase Jumper from "A" Phase Horizontal Bus<br>Reattached at "C" Phase Horizontal Bus as shown.<br>Torque to 60 lb-in (6.78 N-M) |

***Series Combination Short-Circuit Ratings***

When main tenant breakers are installed in Eaton's modular metering stack per the table on **Page V1-T4-145**, the branch breakers installed in downstream panel rated 10 kAIC or greater are protected to the listed series AIC rating. Refer to the downstream panel marking for the proper series combination short-circuit ratings.

Replacement or additional breakers shall be of the same manufacture and type, and shall have an interrupting rating equal to or greater than the interrupting rating of any main tenant breaker installed.

## Series Combination Short-Circuit Ratings

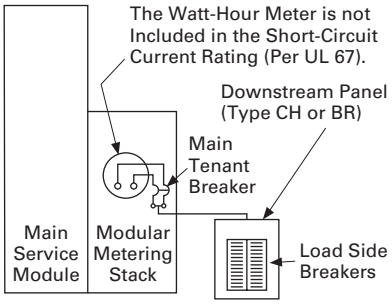

## Series Combination Short-Circuit Ratings—240 Vac

| Main Module Overcurrent Device Breaker Type or Class Fuse | System AIC Rating 120/240 Vac Maximum | Meter Module Tenant Feeder Breaker Type 1MM, 3MM, 35MM, 37MM, 35SS, 37SS or Loadcenter Main Breaker | Tenant Feeder Breaker Short-Circuit Rating | Loadcenter Branch Breaker (Single-, Two- or Three-Pole) |
|---|---|---|---|---|
| None | 10,000 | None | — | BD, BR, BRD, BQ, BQC, GFCB, CH, CHT, BRCAF, CHFCAF, CHF, CH-GFCI |
| Without main disconnect. Cable tap box Type 1MTB_, 3MTB_ | 10,000 | BR_, CC_, BW_, CCV_ | 10,000 | |
| | 22,000 | BRH_ | 22,000 | |
| | 25,000 | CSR_, CHH_H2, CCVH_ | 25,000 | |
| | 42,000 | BRHH_, CHH_H4, CVS_ | 42,000 | |
| | 65,000 | BRX_, CV_, KD_, HKD_ | 65,000 | |
| | 100,000 | CHH_, CVH_, KDC_ | 100,000 | |
| Main switch module Type 1MFS_, 3MFS_ with Class T fuse, 400 A maximum | 42,000 | BRH_ | 22,000 | CH, CHT, CH3, CH-GFCI |
| Main switch module Type 1MFS_, 3MFS_ with Class T fuse, 600 A maximum | 100,000 | BRH_ | 22,000 | BD, BR, BRD, BQ, BQC, GFCB |
| Main switch module Type 1MFS_, 3MFS_ with Class T fuse, 1200 A maximum | 10,000 | BR_, CC_, BW_, CCV_ | 10,000 | BD, BR, BRD, BQ, BQC, GFCB, CH, CHT, BRCAF, CHFCAF, CHF, CH-GFCI |
| | 22,000 | BRH_ | 22,000 | |
| | 25,000 | CSR_, CHH_H2, CCVH_ | 25,000 | |
| | 42,000 | BRHH_, CHH_H4, CVS_ | 42,000 | |
| | 65,000 | BRX_, CV_, KD_, HKD_ | 65,000 | |
| | 100,000 | CHH_, CVH_, KDC_ | 100,000 | |
| Main switch module Type 1MFS_, 3MFS_ with Class T fuse, 1200 A maximum | 100,000 | BRHH_ | 42,000 | BD, BR, BRD, BQ, BQC, GFCB, CH, CHT, BRCAF, CHFCAF, CHF, CH-GFCI |
| Main switch module Type 1BPS_, 3BPS_ with Class L fuse, 1200–2000 A | 10,000 | BR_, CC_, BW_, CCV_ | 10,000 | BD, BR, BRD, BQ, BQC, GFCB, CH, CHT, BRCAF, CHFCAF, CHF, CH-GFCI |
| | 22,000 | BRH_ | 22,000 | |
| | 25,000 | CSR_, CHH_H2, CCVH_ | 25,000 | |
| | 42,000 | BRHH_, CHH_H4, CVS_ | 42,000 | |
| | 65,000 | BRX_, CV_, KD_, HKD_ | 65,000 | |
| | 100,000 | CHH, CVH_, KDC_ | 100,000 | |
| Main breaker module Type 1MCB_, 3MCB_ with KD, HKD (400 A maximum) LD, HLD (600 A maximum) MDL, HMDL (800 A maximum) ND, NGS, HND, NGH (1200 A maximum) RD, RGH (2000 A maximum) | 10,000 | BR_, CC_, BW_, CCV_ | 10,000 | BD, BR, BRD, BQ, BQC, GFCB, CH, CHT, BRCAF, CHFCAF, CHF, CH-GFCI |
| | 22,000 | BRH_ | 22,000 | |
| | 25,000 | CSR_, CHH_H2, CCVH_ | 25,000 | |
| | 42,000 | BRHH_, CHH_H4, CVS_ | 42,000 | |
| | 65,000 | BRX_, CV_, KD_, HKD_ | 65,000 | |
| | 100,000 ① | CHH_, CVH_, KDC_ | 100,000 | |

***Note***

① 100,000 A rating with 100,000 A rated main.

### *1MP 125 A Meter Module*

This All-in-One Meter Module is UL listed for the short-circuit rating at 240 Vac maximum in rms symmetrical amperes per table below.

### 1MP 125 A Meter Module

| Tenant Breaker Catalog Number Two-Pole | Maximum Ampere Rating | UL Listed Series Short-Circuit Rating |
|---|---|---|
| BRX_____ | 125 | 65 kAIC |
| BRHH_____ | 125 | 42 kAIC |
| BRH_____ | 125 | 22 kAIC |
| BR_____ | 125 | 10 kAIC |

When Type BRX, BRHH or BRH tenant breakers are installed in this meter module, then Eaton's breakers rated 10 kAIC or greater installed on the load side of this meter module may be protected for short circuits up to 22 kAIC with Type BRH breakers, 42 kAIC with Type BRHH or 65 kAIC with Type BRX breakers.

See load side breaker panel marking for proper short-circuit current rating.

### 1MP 125 A Meter Module

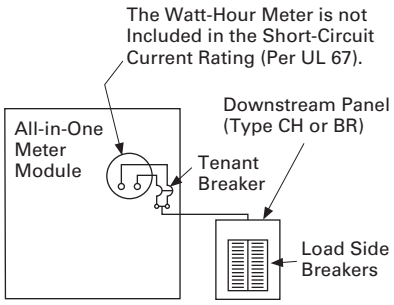


**Note:** The ratings for both 125 and 200 A tenant positions apply to both Type BR and CH loadcenters and 10 kAIC branch breakers.

### *1MP 200 A Meter Module*

This All-in-One Meter Module is UL listed for the short-circuit rating at 240 Vac maximum in rms symmetrical amperes per table below.

### 1MP 200 A Meter Module

| Tenant Breaker Catalog Number Two- or Three-Pole | Maximum Ampere Rating | UL Listed Series Short-Circuit Rating |
|---|---|---|
| CVH_XMM | 200 | 100 kAIC |
| CV_XMM | 200 | 65 kAIC |
| CVS_XMM | 200 | 42 kAIC |
| CCVH_XMM | 200 | 25 kAIC |
| CCV_X | 200 | 10 kAIC |

When Type CV tenant breakers are installed in this meter module, then breakers rated 10 kAIC or greater installed on the load side of this meter module may be protected for short circuits up to 100 kAIC.

See load side breaker panel marking for proper short-circuit current rating.

### 1MP 200 A Meter Module

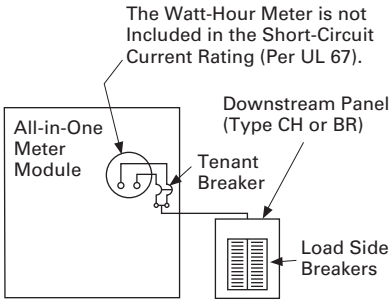

### *General*

When tenant breakers are installed in Eaton's metering modules per the short-circuit current ratings below, the branch breakers installed in downstream panel rated 10 kAIC or greater are protected to the listed series AIC rating. Refer to the downstream panel marking for the proper series combination short-circuit ratings. These ratings apply to both loadcenter Types BR and CH.

The short-circuit rating is limited to the lowest interrupting rating of any tenant breaker installed or to the lowest marked interrupting rating of the main switch, main breaker or main lug modules.

Replacement or additional breakers shall be of the same type and manufacturer, and shall have an interrupting rating equal to or greater than the interrupting rating of any tenant breaker presently installed in the meter module.

### *1MM, 3MM 125 A Meter Module*

When used with main switch, main breaker or main lug modules, this meter module is UL listed for the short-circuit rating at 240 Vac maximum in rms symmetrical amperes per table below.

### 1MM, 3MM 125 A Meter Module

| Tenant Breaker Catalog Number Two-Pole | Amperes Maximum | UL Listed Series Short-Circuit Rating |
|---|---|---|
| BRX_____ | 125 | 65 kAIC |
| BRHH_____ | 125 | 42 kAIC |
| BRH_____ | 125 | 22 kAIC |
| BR_____ | 125 | 10 kAIC |

When Type BRX, BRHH or BRH tenant breakers are installed in this meter module, then breakers rated 10 kAIC or greater installed on the load side of this meter module may be protected for short circuits up to 22 kAIC with Type BRH breakers, 42 kAIC with Type BRHH or 65 kAIC with Type BRX breakers.

See load side breaker panel marking for proper short-circuit current rating.

### 1MM, 3MM 125 A Meter Module

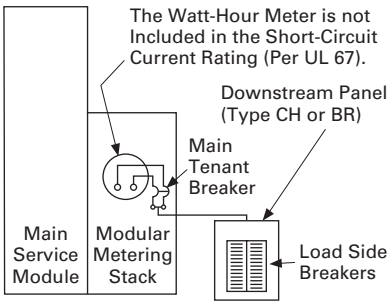


### *1MM, 3MM, 200 A Meter Modules; 35MM, 37MM, 35SS and 37SS 225 A Meter Modules*

When used with main switch, main breaker or main lug modules, these meter modules are UL listed for the short-circuit rating at 240 Vac maximum in rms symmetrical amperes per table below.

### 1MM, 3MM, 200 A Meter Modules; 35MM, 37MM, 35SS and 37SS 225 A Meter Modules

| Tenant Breaker Catalog Number Two- or Three-Pole | Amperes Maximum 1MM 3MM 200 A | Amperes Maximum 35MM, 37MM, 35SS, 37SS 225 A | UL Listed Series Short-Circuit Rating |
|---|---|---|---|
| CVH_XMM | 200 | 225 | 100 kAIC |
| CV_XMM | 200 | 225 | 65 kAIC |
| CVS_XMM | 200 | 225 | 42 kAIC |
| CCVH_X | 200 | 225 | 25 kAIC |
| CCV_X | 200 | 225 | 10 kAIC |
| CC_X | 200 | 225 | 10 kAIC |

When Type CV tenant breakers are installed in these meter modules, then Eaton's breakers rated 10 kAIC or greater installed on the load side of these meter modules may be protected for short circuits up to 100 kAIC.

See load side breaker panel marking for proper short-circuit current rating.

### 1MM, 3MM, 200 A Meter Modules; 35MM, 37MM, 35SS and 37SS 225 A Meter Modules

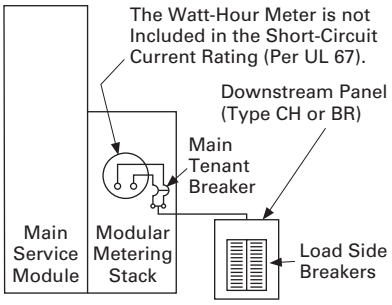

***Ratings***

A. The assembly shall be rated to withstand mechanical forces exerted during short-circuit conditions when connected directly to a power source having available fault current [22,000] [42,000] [65,000] [100,000] amperes symmetrical at rated voltage.

***Construction***

A. The entire assembly shall be front accessible and shall include [main lugs] [a main disconnect device].

B. Tenant disconnects shall be wired for cold sequence and shall be molded case circuit breakers.

C. The meter sockets shall be (ring-) (ringless-) type rated (125 A) (200 A) (as shown on the plans) and a bypass (shall be) (shall not be) required. If required, the bypass shall be a (slider-) (horn-) (lever-) (disconnect block-) type. The meter sockets and associated branch protective device positions shall be completely prewired and shipped ready for installation of the meters and tenant main breakers. Meter sockets shall include covers with sealing positions.

***Bus***

A. All busbars shall be [tin-plated aluminum or copper]. Main horizontal busbars shall be mounted with all three phases arranged in the same vertical plane. Bus sizing shall be based on UL standard temperature rise criteria for multiple metering equipment.

B. Provide a full capacity neutral bus where a neutral bus is indicated on the drawings.

C. All hardware used for busbar connections shall be high-tensile strength, zinc-plated. Provide Belleville-type spring washers for all bus joints.

***Wiring/Terminations***

A. [Mechanical-type terminals] [Crimp-type termination provisions] shall be provided for all line terminations suitable for copper or aluminum cable and rated at 75 °C.

B. Lugs shall be provided in the incoming line section for connection of the main grounding conductor.

***Main Circuit Protective Devices***

A. Main protective devices shall be [molded case circuit breakers] [bolted pressure switches] [quick-make/quick-break fusible switches].

***Molded Case Circuit Breakers***

A. [Main] [Feeder] [All] protective devices shall be molded case circuit breakers with inverse time and instantaneous tripping characteristics.

B. Circuit breakers shall be operated by a toggle-type handle and shall have a quick-make/quick-break over-center switching mechanism that is mechanically trip-free. Automatic tripping of the breaker shall be clearly indicated by the handle position. Contacts shall be nonwelding silver alloy and arc extension shall be accomplished by means of DE-ION® arc chutes.

C. Circuit breakers shall have a minimum symmetrical interrupting capacity as indicated on the drawings.

D. Circuit breakers [250-] [400-] [600-] [1200-] ampere frame and below shall be manufactured by Eaton with thermal-magnetic or electronic trip units having inverse time-current characteristics.

E. Circuit breakers shall be UL listed for series application.

***Bolted Pressure Switches***

A. Main protective devices shall be bolted pressure contact type and shall be UL listed.

B. Fusible switches shall be furnished with Class L fuse clips. Switch contact interrupting capacity shall be 12 times the continuous rating of the switch.

C. Fuse access door s hall be mechanically interlocked with the operating handle and shall have provisions for padlocking the switch in the OPEN position.

D. The switch shall use a stored energy deadfront operating mechanism compressed and released by the operating handle, to provide quick positive switching action, independent of the operating handle.

E. Switches shall be manually operated.

***Quick-Make/Quick-Break Fusible Switches***

A. Fusible switches 30 A through 1200 A frames shall be furnished with 300 V Class T-type fuse clips unless otherwise scheduled.

B. Switches shall incorporate safety cover interlocks to prevent opening the cover with the switch in the ON position.

C. Provide defeater for authorized personnel.

D. Handles shall have provisions for padlocking and shall clearly indicate the ON or OFF position.

E. Front cover doors shall be padlockable in the CLOSED position.

F. Main protective devices shall be quick-make/quick-break fusible switches as manufactured by Eaton.

***Tenant Utility Metering***

A. For EUSERC serviced areas, meter centers shall incorporate metering sections with tenant feeder circuits using ring-type meter sockets rated [125] [200] amperes to meet local utility and/or customer requirements.

B. The self-contained meter sockets shall include a test bypass/disconnect block per EUSERC requirements,

– OR–

A. For non-EUSERC serviced areas, meter centers shall incorporate metering sections with tenant feeder circuits using [ring-] [ringless-] type meter sockets rated [125] [200] [320] amperes to meet local utility or customer requirements. Provide meter sockets with individual covers having sealing provisions.

B. Meter sockets shall have manual bypass and optional internal barriers.

***Enclosures***

A. NEMA 1 Enclosure

– OR–

A. Outdoor NEMA 3R Surface-Mounted Enclosure

***Finish***

A. Boxes and trims shall be bonderized and finished with ANSI 61 light gray enamel.

## Dimensions

Approximate Dimensions in Inches (mm)

### General Layout

Minimum and maximum height of single-phase and three-phase meter sockets above typical ground level.

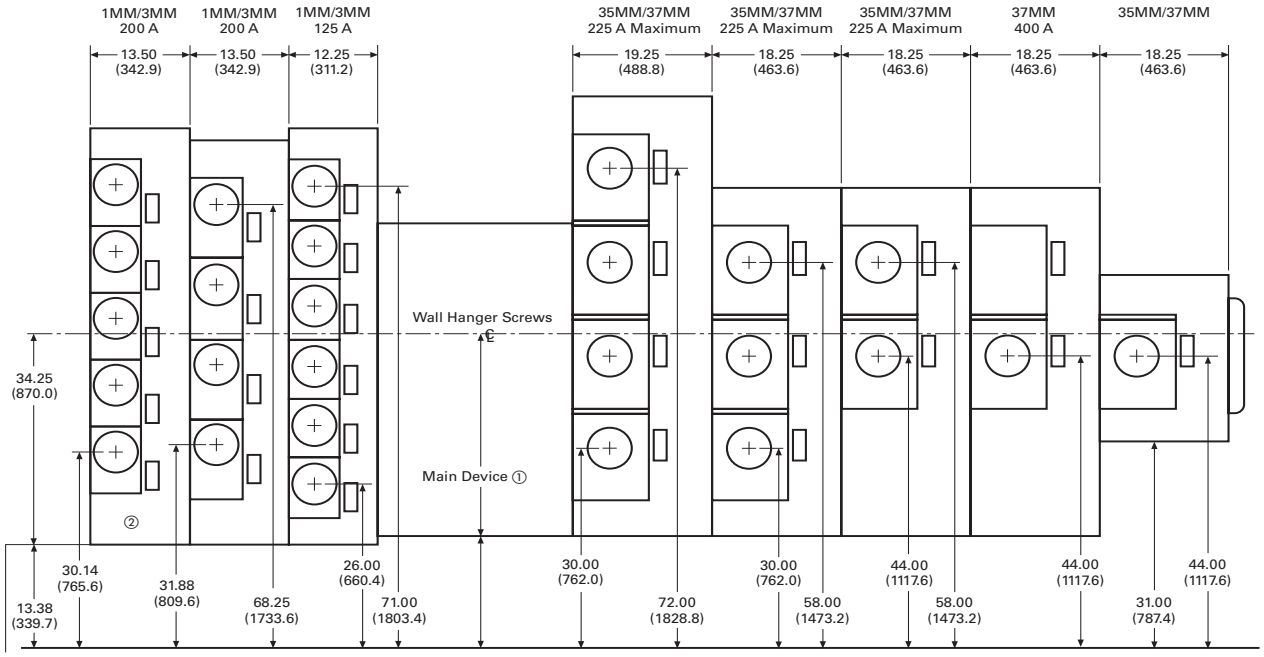


### *Mounting Features*

***Mounting Features***

A standard mounting rail and factory-installed swing away feet, speed up and simplify installation.

***Notes***

① Not a constant value. Dimension changes depending on main device chosen. See **Page V1-T4-110** for specific dimensions.

② Residential device.

Power Pedestals

Construction Site and RV Parks

Marina Power and Lighting

Mobile Home Panels


## 5.1 Introduction

Product Description . . . . . V1-T5-2
Application Description . . . . . V1-T5-2
Optional Features . . . . . V1-T5-2

## 5.2 Temporary Power/RV Park

Product Overview . . . . . V1-T5-3
Product Description . . . . . V1-T5-3
Application Description . . . . . V1-T5-4
Features and Benefits . . . . . V1-T5-4
Standards and Certifications . . . . . V1-T5-5
Catalog Number Selection . . . . . V1-T5-6
Product Selection . . . . . V1-T5-7
Accessories . . . . . V1-T5-7
Renewal Parts . . . . . V1-T5-8
Surface Units . . . . . V1-T5-10
Product Overview . . . . . V1-T5-10
Product Selection . . . . . V1-T5-10
Dimensions . . . . . V1-T5-13
Pedestal Units . . . . . V1-T5-16
Product Overview . . . . . V1-T5-16
Product Selection . . . . . V1-T5-16
Dimensions . . . . . V1-T5-18

## 5.3 Mobile Home Panels

Product Overview . . . . . V1-T5-21
Features . . . . . V1-T5-21
Catalog Number Selection . . . . . V1-T5-22
Product Selection . . . . . V1-T5-22
Accessories . . . . . V1-T5-23
Dimensions . . . . . V1-T5-24

## 5.4 RV Park Hook-Ups

Power Pedestals . . . . . V1-T5-28
Powerhouse Power Pedestal . . . . . V1-T5-30
Powerhouse—Stainless Steel (SS) Power Pedestal . . . . . V1-T5-33
Newport Camp Mate Power Pedestal . . . . . V1-T5-36
Park Light Power Pedestal . . . . . V1-T5-39
Firehouse . . . . . V1-T5-42
Digital Electronic Kilowatthour Meters . . . . . V1-T5-44
Distribution Equipment—Ground Fault Monitor . . . . . V1-T5-45
Distribution Equipment—Substations . . . . . V1-T5-46
Distribution Equipment—Panels . . . . . V1-T5-49
Distribution Equipment—Transformers . . . . . V1-T5-50

## 5.5 Marina Power and Lighting Equipment

Power Pedestals . . . . . V1-T5-51
Lighthouse . . . . . V1-T5-54
Lighthouse–SS . . . . . V1-T5-58
Admiral–SS . . . . . V1-T5-62
Newport Harbor Mate . . . . . V1-T5-65
Hatteras Light . . . . . V1-T5-69
Firehouse . . . . . V1-T5-73
Smart Start . . . . . V1-T5-79
Mariner . . . . . V1-T5-80
Digital Electronic Kilowatthour Meters . . . . . V1-T5-81
Distribution Equipment—Ground Fault Monitor . . . . . V1-T5-82
Distribution Equipment—Mega Yacht Powerpoint . . . . . V1-T5-83
Distribution Equipment—Substations . . . . . V1-T5-86
Distribution Equipment—Panels . . . . . V1-T5-89
Distribution Equipment—Transformers . . . . . V1-T5-90


**Don't Give Up!**

If you don't find the product you want in this catalog, try the Flex Center at **1-800-330-6479**.

Power Pedestals

## Contents

***Description***

Introduction



## Product Description

A power pedestal is a device designed for outdoor service to meet temporary power requirements at construction sites, marinas, recreational vehicle (RV parks, marinas and mobile home parks). Power pedestals provide a safe and reliable means for users to access electricity at such locations.

## Application Description

### Construction Site and RV Parks

Power outlet panels on construction sites and in RV parks provide a safe and reliable means for users to access electricity. A wide range of products are available with multiple features and enclosure material options.

***Construction Site and RV Parks***

### Mobile Home Panels

Eaton's versatile mobile home panels have a user-friendly design that allows for a faster, cleaner installation. Mobile home panels are designed for service entrance distribution, and include a meter and distribution section with breaker and receptacle configuration options.

***Mobile Home Panels***

### Marina Power and Lighting

Park lighting and marina pedestals offer robust enclosure options with premium features to enhance user convenience at marinas and campgrounds.

***Marina Power and Lighting***

## Optional Features

- Product can ship from the factory completely assembled and prewired
- External light
- TV and telephone jacks
- Ground fault monitors
- Digital electronic kilowatthour meters
- Water faucet
- Available GFI (ground fault interrupter) protection
- Weatherproof engineered resin enclosure (will never rust or deteriorate)
- Stainless steel to meet and exceed all applicable codes, and withstand harsh inland and coastal environments

Power Outlet Panels

## Contents


| *Description* | *Page* |
|---|---|
| Product Overview | V1-T5-3 |
| Application Description | V1-T5-4 |
| Features and Benefits | V1-T5-4 |
| Standards and Certifications | V1-T5-5 |
| Catalog Number Selection | V1-T5-6 |
| Product Selection | V1-T5-7 |
| Accessories | V1-T5-7 |
| Renewal Parts | V1-T5-8 |
| Surface Units | V1-T5-10 |
| Pedestal Units | V1-T5-16 |




## Product Overview

A power outlet panel (or POP) is a device designed for outdoor service to meet temporary power requirements at construction sites and RV parks. POPs provide a safe and reliable means for users to access electricity at such locations.

### Product Description

Power outlet panels shall be designed for outdoor service to meet temporary power outlet requirements at construction sites and provide high quality, economical power to individual sites at RV parks. POPs shall be provided with means to bond the neutral for temporary service entrance applications. RV panels shall have a factory-installed insulated neutral bar.

#### *Receptacles and Circuit Protection*

Circuit protection shall be Eaton's UL listed full-size Type BR or half-size Type BD circuit breakers. The receptacles shall be NEMA commercial/industrial grade devices. Ground fault protection (GFCB) shall be provided at the 20 A duplex NEMA 5-20R receptacle or 20 A single-pole circuit breaker when required. Ground fault protection shall be provided at the circuit breaker for receptacles above 20 A when required.

#### *Construction*

The power outlet panel pedestal shall be of deadfront design and constructed of heavy gauge, 100 percent galvanized steel. Baked-on polyester powder coating shall be used for excellent mechanical strength, plus resistance to chalking caused by the sun's ultraviolet rays. The power outlet panel surface and pedestal units shall have NEMA Type 3R rainproof enclosures.

#### *Ease of Installation*

Panels shall ship from the factory completely assembled, prewired with 100 percent copper wire, and tested in accordance with UL Standard 231. The door shall swing up and open for user convenience and ease of access to breakers and receptacles. When required, a means for securing the door in the open position shall be provided. Panels shall be bottom fed through knockouts in endwall or top fed using a bolt-on raintight hub. Knockouts shall range from 1/2-inch (12.7 mm) to 1-1/2 inches (38.1 mm). Grounding provisions (#4–14 Cu/Al) shall be provided on all panels.

## Application Description

POPs are also sometimes called temporary power panels, temporary site service equipment or RV panels.

### *Construction Site Application*

When POPs are used at a construction site, they are installed on a temporary basis until permanent electrical power is available at the building. The most common reason for needing a POP at a construction site is to provide a power source for the contractor's tools.

*Construction Site Application*

### *RV Park Applications*

When POPs are used at an RV park, they are installed for more permanent use and serve the purpose of providing power to the recreational vehicles. Many RV parks now supply customers with amenities such as lighted POPs with TV and telephone jacks.

*RV Park Application*

### *Service Applications*

Suitable for use as temporary Service Entrance Equipment, temporary power service equipment and recreational vehicle site supply.

## Features and Benefits

- Designed for outdoor service to meet power outlet requirements
- Receptacles conform to NEMA and/or ANSI configurations as specified by the National Electrical Code® (NEC)
- Includes a factory-installed insulated neutral bar with provisions for bonding when used for temporary service entrance applications
- 125 A rated meter socket
- Temporary power and RV park POPs are CSA listed. Compact POP and single receptacle devices are not CSA listed

### *Designed for Easy Installation and Protection*

- Panels come from the factory completely assembled, prewired with 100 percent copper wire and tested...ready for easy installation
- Door swings up and open for user convenience and ease of access to breakers and receptacles
- Panels can be bottom fed through knockouts in the endwall or top fed using a bolt-on raintight hub
- Two-piece deadfront cover allows field wiring without interfering with factory wiring
- Lower deadfront cover permits easy field wiring to circuit protective devices
- Available GFI (ground fault interrupter) single- and two-pole protection through 50 A

***Two Styles to Meet Your Power Outlet Needs***

- **Surface mount:** User mounts unit to a post
- **Pedestal mount:** User mounts with an underground pedestal extension or pad-mounting bracket. (Underground pedestal extension and pad-mounting bracket are sold separately. See accessories **Page V1-T5-7** for part numbers and options)

***Compact Design Available in Certain Configurations for Added Convenience***

## Standards and Certifications

- UL Standard 231
- UL File Number E163588

Receptacles conform to NEMA and/or ANSI configurations as specified by the NEC.

***Standard Compliance***

All power outlet panels for temporary construction site power and RV (recreational vehicle) application shall be UL listed for the U.S. per UL Standard 231, File E163588. Receptacles shall conform to NEMA and/or ANSI configurations as specified by the National Electrical Code (NEC).

Listed

## Surface Units

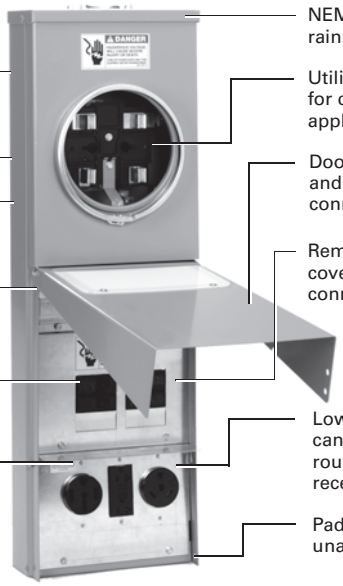

- 100 percent galvanized steel with baked-on polyester powder coating
- Three-point mounting
- One-piece case back for metered and unmetered panels
- Lighted option for site location and nighttime panel operations
- GFI circuit breakers available through 50 A
- Unique steel barrier prevents unauthorized operation of breakers when door is closed and padlocked
- NEMA 3R construction for rainproof installation
- Utility grade metering available for construction site or RV park applications
- Door swings up when opening and allows cords to remain connected when closed.
- Removable upper deadfront cover for easy incoming wire connections to breaker terminals
- Lower deadfront cover can be removed for easy routing of incoming wires or receptacle changeouts
- Padlock provisions to prevent unauthorized entry

- **Metered units available with meter on top or on bottom**
- **Units are factory wired and assembled**

## Pedestal Units

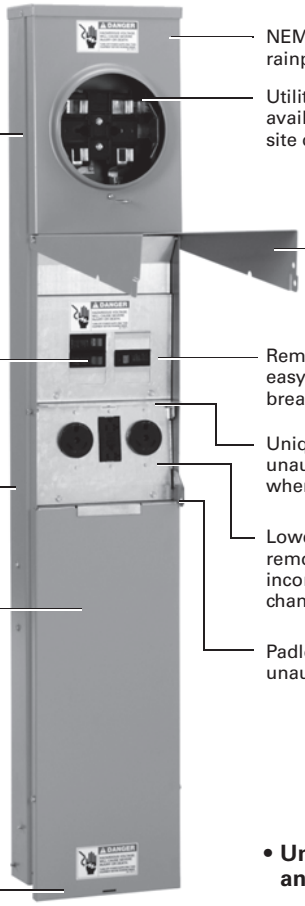

- 100 percent galvanized steel with baked-on polyester powder coating
- GFI circuit breakers (single- and two-pole) available through 50 A
- One-piece case back for metered and unmetered panels
- Loop-feed lug assembly with 350 kcmil lugs included as standard
- Pedestal extension available for underground services
- Pad-mounted bracket option also available
- NEMA 3R construction for rainproof installation
- Utility grade metering available for construction site or RV park applications
- Door swings up when opening and allows cords to remain connected when closed
- Removable upper deadfront cover for easy incoming wire connections to breaker terminals
- Unique steel barrier prevents unauthorized operation of breakers when door is closed and padlocked
- Lower deadfront cover can be removed for easy routing of incoming wires or receptacle changeouts
- Padlock provisions to prevent unauthorized entry

- **Units are factory wired and assembled**

## Catalog Number Selection

**C H M 1 N 7 N 4 N P X L T Z U**

**Eaton's Cutler-Hammer® Series**

**Metering Type**
- **U** = Unmetered
- **M** = Metered-ring
- **R** = Metered-ringless

**Receptacle Type Left Position** ①

| | |
|---|---|
| **1** = NEMA 14-50R | **A** = NEMA L14-50R |
| **2** = NEMA 5-20R2 ② | **B** = NEMA L6-50R |
| **3** = NEMA 14-30R | **C** = NEMA L5-50R |
| **4** = NEMA TT-30R | **D** = NEMA L14-30R |
| **5** = NEMA 6-20R2 | **E** = NEMA L6-30R |
| **6** = NEMA 5-20R2 | **F** = NEMA L5-30R |
| **7** = NEMA 5-20R2GFI | **H** = NEMA L6-20R |
| **8** = NEMA 5-20R2GFI ② | **J** = NEMA L5-20R |
| **9** = NEMA 5-20R2GFI ③ | **Blank** = No receptacle |
| **K** = NEMA 6-20R2 ② | |

**Receptacle Type Center Position** ①
- See "**Receptacle Type Left Position**" for code selection

**Receptacle Type Right Position** ①
- See "**Receptacle Type Left Position**" for code selection

**Circuit Breaker Type Position 2**
- **N** = Non-ground fault
- **G** = Ground fault

**Circuit Breaker Type Position 3**
- **N** = Non-ground fault
- **G** = Ground fault

**Circuit Breaker Type Position 1**
- **N** = Non-ground fault
- **G** = Ground fault

**Mounting**
- **S** = Surface
- **P** = Pedestal
- **B** = Back-to-back pedestal

**Interior**
- **X** = Six circuit
- **Blank** = Standard Four circuit

**Lighting**
- **L** = Lighted

**Pedestal Extension**
- **TZ**= Factory installed pedestal extension with lay-in ground lug

**Meter Location (for Metered Devices Only)**
- **U** = Bottom location
- **Blank** = Top location

***Notes***

① For receptacle configurations, see **table below**.

② Weather-resistant.

③ Weather-resistant/tamper resistant.

### Receptacle Configuration

| | | | | | | | | |
|---|---|---|---|---|---|---|---|---|
| **1** | | 50 A, 125/250 V, three-pole, four-wire, **NEMA 14-50R**<br>Two-pole, 50 A breaker | **4** | | 30 A, 125 V, two-pole, three-wire, **NEMA TT-30R**<br>Single-pole, 30 A breaker | **7** | | 20 A, 125 V, two-pole, three-wire, **NEMA 5-20R2GFI**<br>Single-pole, 20 A breaker |
| **2** | | 20 A, 125 V, two-pole, three-wire, weather-resistant (WR), **NEMA 5-20R2**<br>Single-pole, 20 A breaker | **5** | | 20 A, 250 V, two-pole, three-wire, **NEMA 6-20R2**<br>Two-pole, 20 A breaker | **8** | | 20 A, 125 V, two-pole, three-wire, weather-resistant (WR), **NEMA 5-20R2GFI** |
| **3** | | 30 A, 125/250 V, three-pole, four-wire, **NEMA 14-30R**<br>Two-pole, 30 A breaker | **6** | | 20 A, 125 V, two-pole, three-wire, **NEMA 5-20R2**<br>Single-pole, 20 A breaker | **9** | | 20 A, 125 V, two-pole, three-wire, weather-resistant/ tamper-resistant (WR TR), **NEMA 5-20R2GFI** |
| | | | | | | **K** | | 20 A, 250 V, two-pole, three-wire, weather-resistant (WR), **NEMA 6-20R2**<br>Two-pole, 20 A breaker |

### Twist-Lock and Custom Receptacle/Breaker Combinations

| | | | | | | | | |
|---|---|---|---|---|---|---|---|---|
| **A** | | 50 A, 125/250 V, three-pole, three-wire, **NEMA L14-50R**<br>Two-pole, 50 A breaker | **D** | | 30 A, 125/250 V, three-pole, four-wire, **NEMA L14-30R**<br>Two-pole, 30 A breaker | **H** | | 20 A, 250 V, two-pole, three-wire, **NEMA L6-20R**<br>Two-pole, 20 A breaker |
| **B** | | 50 A, 250 V, two-pole, three-wire, **NEMA L6-50R**<br>Two-pole, 50 A breaker | **E** | | 30 A, 250 V, two-pole, three-wire, **NEMA L6-30R**<br>Two-pole, 30 A breaker | **J** | | 20 A, 125 V, two-pole, three-wire, **NEMA L5-20R**<br>Single-pole, 20 A breaker |
| **C** | | 50 A, 125 V, two-pole, three-wire, **NEMA L5-50R**<br>Single-pole, 50 A breaker | **F** | | 30 A, 125 V, two-pole, three-wire, **NEMA L5-30R**<br>Single-pole, 30 A breaker | | | |

## Product Selection

When quoting or selecting a power outlet panel, the following questions should be answered:

- Unmetered, ring or ringless style
- Number and types of receptacles (seven standard and eight twist-lock options)
- Standard or ground fault breakers
- Surface, pedestal or back-to-back mounting
- Are any factory or field options required?

***Power Outlet Panel Receptacle Configuration Rules***

**Four Receptacles/Unit**
All receptacles must be NEMA 5-20R2 or NEMA 5-20R2GFI, surface mount only.

**Three Receptacles/Unit**

- One or more of the receptacles must be NEMA 6-20R2, NEMA 5-20R2 or NEMA 5-20R2GFI
- NEMA 6-20R2, NEMA 5-20R2, or NEMA 5-20R2GFI must go in the second position
- If two receptacles consist of types NEMA 14-50R, NEMA 10-50R, NEMA 14-30R or NEMA 6-20R2 a six-circuit interior must be added
  - Example: **CHUIN5N2NSX**

**Note:** Configuration 1 and 2 were chosen so a six-circuit interior needs to be added (suffix X) to the end of the catalog number. Also, configuration 5 is in the second position.

**Two, One and Zero Receptacles/Unit**
Any configuration.

## Accessories

### Accessories

| | Description | Catalog Number |
|---|---|---|
| **Underground Pedestal Extension** | Underground pedestal extension | **CHPEDEXT** |
| | Stainless steel underground pedestal extension | **CHPEDEXTSS** |
| **Pad-Mount Bracket** | Pad-mount bracket | **CHPADEXT** |
| **Cable TV/Telephone Bracket** | Cable TV and telephone bracket | **CHTELTV** |
| **DS Hub** | Rainproof conduit hub 0.75 inch (19.1 mm) | **DS075H1** |
| | Rainproof conduit hub 1.00 inch (25.4 mm) | **DS100H1** |
| | Rainproof conduit hub 1.25 inch (31.8 mm) | **DS125H1** |
| | Rainproof conduit hub 1.50 inch (38.1 mm) | **DS150H1** |

**Fluorescent Light Kit**

### Fluorescent Light Kit

| Description | Catalog Number |
|---|---|
| Converts power outlet panel to lighted unit, **must also order CHOUTCVRL** | **CHFLGTKIT** |

## Renewal Parts

### Renewal Parts

| | Description | Catalog Number |
|---|---|---|
| **Circuit Breaker (BR/GFCB)** | See this volume, Tab 1, section 1.2 | — |
| **Meter Socket** | Ring style replacement meter socket | **CHPOPMSRING** |
| | Ringless style replacement meter socket | **CHPOPMSRL** |
| | 5th jaw kit | **ARP00035CHJ** |
| | Horn bypass (one lug cap per kit; four kits required per device) | **ARP00777CH** |
| **Bonding Strap and Mounting Hardware** | Bonding strap and mounting hardware | **CHBONDST** |
| **Inner Lens** | Inner lens for lighted power outlet panels | **CHINLENS** |
| **Loop Feed Lug Assembly** | Loop feed lug assembly for single pedestal | **CHLOOPFDP** |
| | Loop feed lug assembly for back-to-back pedestal | **CHLOOPFDB** |
| **Lower Deadfront Cover** | Blank lower deadfront cover | **CHLDFCVR** |
| | Lower deadfront cover with duplex receptacle opening | **CHLDFCVR1** |
| | Lower deadfront cover with duplex, duplex receptacle opening | **CHLDFCVR2** |
| | Lower deadfront cover with duplex, duplex, duplex receptacle opening | **CHLDFCVR3** |
| | Lower deadfront cover with rectangle receptacle opening | **CHLDFCVR4** |
| | Lower deadfront cover with rectangle, rectangle receptacle opening | **CHLDFCVR5** |
| | Lower deadfront cover with rectangle, rectangle, rectangle receptacle opening | **CHLDFCVR6** |
| | Lower deadfront cover with duplex, rectangle receptacle opening | **CHLDFCVR7** |
| | Lower deadfront cover with duplex, rectangle, duplex receptacle opening | **CHLDFCVR8** |
| | Lower deadfront cover with rectangle, rectangle, duplex receptacle opening | **CHLDFCVR9** |
| | Lower deadfront cover with round receptacle opening | **CHLDFCVR10** |
| | Lower deadfront cover with round, round receptacle opening | **CHLDFCVR11** |
| | Lower deadfront cover with round, duplex receptacle opening | **CHLDFCVR12** |

## Renewal Parts, continued

| | Description | Catalog Number |
|---|---|---|
| | Lower deadfront cover with round, duplex, duplex receptacle opening | **CHLDFCVR13** |
| | Lower deadfront cover with round, duplex, round receptacle opening | **CHLDFCVR14** |
| | Lower deadfront cover with round, rectangle receptacle opening | **CHLDFCVR15** |
| | Lower deadfront cover with round, rectangle, rectangle receptacle opening | **CHLDFCVR16** |
| | Lower deadfront cover with round, rectangle, round receptacle opening | **CHLDFCVR17** |
| | Lower deadfront cover with round, rectangle, duplex receptacle opening | **CHLDFCVR18** |
| **Upper Deadfront Cover** | Upper deadfront cover with six breaker twistouts | **CHUDFCVR** |
| | Upper deadfront cover with provisions for lighted option | **CHUDFCVRL** |
| **Outer Door** | Outer door | **CHOUTCVR** |
| | | |
| **Outer Door with Lens** | Outer door with lens | **CHOUTCVRL** |
| | | |
| **Neutral Assemblies** | Six-hole neutral assembly with 2/0 lug | **CHNEUT** |
| | Seven-hole neutral assembly with 2/0 lug | **CHNEUT1** |
| | Five-hole ground bar kit | **GBK5** |
| | 10-hole ground bar kit | **GBK10** |
| | **Replacement Meter Cover** | |
| | Replacement meter cover—ring type | **CHPOPRMC** |
| | Replacement meter cover—ringless | **CHPOPRLMC** |
| | Replacement meter cover—ringless | **CHPOPRLMCN** |
| | Replacement meter cover—ringless | **CHPOPRLMCN2** |

**Power Outlet Panels**

## Contents


| *Description* | *Page* |
|---|---|
| Product Overview | **V1-T5-3** |
| Surface Units | |
| Dimensions | **V1-T5-13** |
| Pedestal Units | **V1-T5-16** |




## Surface Units

### Product Overview

A power outlet panel (or POP) is a device designed for outdoor service to meet temporary power requirements at construction sites and recreation vehicle (RV) parks. POPs provide a safe and reliable means for users to access electricity at such locations.

### Product Selection

***Power Outlet Panel Receptacle Configuration Rules***

See **Page V1-T5-7** for complete list.

**Four Receptacles/Unit**

All receptacles must be NEMA 5-20R2 and/or NEMA 5-20R2GFI, surface mount only.

**Three Receptacles/Unit**

- One or more of the receptacles must be NEMA 6-20R2, NEMA 5-20R2 or NEMA 5-20R2GFI
- NEMA 6-20R2, NEMA 5-20R2, or NEMA 5-20R2GFI must go in the second position
- If two receptacles consist of types NEMA 14-50R, NEMA 10-50R, NEMA 14-30R or NEMA 6-20R2 a six-circuit interior must be added
  - Example: **CHUIN5N2NSX**

**Note:** Configuration 1 and 2 were chosen so a six-circuit interior needs to be added (suffix X) to the end of the catalog number. Also, configuration 5 is in the second position.

**Two, One and Zero Receptacles/Unit**

Any configuration.

**Options**

- Six-circuit interior
- Factory-mounted pedestal extension
- Lighted
- Bottom fed

## Surface Type

Single Receptacle CHU4S

Unmetered Type CHU1N7N4NS

Unmetered (Compact Version)

| Ampere Series | Receptacle Description Position Left | Center | Right | Breaker Description 1st | 2nd | 3rd | Catalog Number |
|---|---|---|---|---|---|---|---|
| **Unmetered Single Receptacle** | | | | | | | |
| 50 | — | 14-50R | — | No breaker | No breaker | No breaker | **CHU1S** |
| 30 | — | 14-30 R | — | No breaker | No breaker | No breaker | **CHU3S** |
| 30 | — | TT-30R | — | No breaker | No breaker | No breaker | **CHU4S** |
| 20 | — | 6-20R2 | — | No breaker | No breaker | No breaker | **CHU5S** |
| 20 | — | 5-20R2 | — | No breaker | No breaker | No breaker | **CHU6S** |
| 20 | — | 5-20R2GFI | — | No breaker | No breaker | No breaker | **CHU7S** |
| **Unmetered** | | | | | | | |
| 20/20/20 | 5-20R2 | 5-20R2 | 6-20R2 | GFI | GFI | GFI | **CHU6G6G5GS** |
| 20/20/20 | 5-20R2WR | 5-20R2WR | 6-20R2WR | GFI | GFI | GFI | **CHU2G2GKGS** |
| 20/20/20 | 5-20R2GFI | 5-20R2GFI | 6-20R2 | Non-GFI | Non-GFI | Non-GFI | **CHU7N7N5NS** |
| 20/20/20 | 5-20R2GFIWR | 5-20R2GFIWR | 6-20R2WR | Non-GFI | Non-GFI | Non-GFI | **CHU8N8NKNS** |
| 20/20/20 | 5-20R2GFI | 5-20R2GFI | 6-20R2 | Non-GFI | Non-GFI | GFI | **CHU7N7N5GS** |
| 20/20/20 | 5-20R2GFIWR | 5-20R2GFIWR | 6-20R2WR | Non-GFI | Non-GFI | GFI | **CHU8N8NKGS** |
| 50/20/30 | 14-50R | 5-20R2GFI | TT-30R | Non-GFI | Non-GFI | Non-GFI | **CHU1N7N4NS** |
| 50/20/30 | 14-50R | 5-20R2GFI | 6-20R | GFI | Non-GFI | Non-GFI | **CHU1G7N7NS** |
| 50/20 | 14-50R | 5-20RGFI | — | GFI | Non-GFI | — | **CHU1G7NS** |
| 50/20 | 14-50R | 5-20RGFI | — | Non-GFI | Non-GFI | — | **CHU1N7NS** |
| 50/20/50 | 14-50R | 5-20R2GFI | 14-50R | Non-GFI | Non-GFI | Non-GFI | **CHU1N7N1NSX** ① |
| 30/30/20 | TT-30R | 5-20R2GFI | TT-30R | Non-GFI | Non-GFI | Non-GFI | **CHU4N7N4NS** |
| 20/20/20 | 5-20R2 | 5-20R2 | 6-20R2 | GFI | GFI | GFI | **CHU6G6G5GS60M** ② |
| **Unmetered (Compact Version)** | | | | | | | |
| 50 | 14-50R | — | — | Non-GFI | — | — | **CHU1NS** |
| 20 | 5-20R2 | — | — | Non-GFI | — | — | **CHU2NS** |
| 30 | TT-30R | — | — | GFI | — | — | **CHU4GS** |
| 30/30 | TT-30R | TT-30R | — | Non-GFI | Non-GFI | — | **CHU4N4NS** |
| 30/20 | TT-30R | 5-20R2 | — | Non-GFI | Non-GFI | — | **CHU4N6NS** |
| 30/20 | TT-30R | 5-20R2GFI | — | Non-GFI | Non-GFI | — | **CHU4N7NS** |
| 30 | TT-30R | — | — | Non-GFI | — | — | **CHU4NS** |
| 20 | 6-20R2 | — | — | GFI | — | — | **CHU5GS** |
| 20/20 | 5-20R2 | 5-20R2 | — | GFI | GFI | — | **CHU6G6GS** |
| 20 | 5-20R2 | — | — | GFI | — | — | **CHU6GS** |
| 20/20 | 5-20R2 | 5-20R2 | — | Non-GFI | Non-GFI | — | **CHU6N6NS** |
| 20 | 5-20R2 | — | — | Non-GFI | — | — | **CHU6NS** |
| 20/20 | 5-20R2GFI | 5-20R2GFI | — | Non-GFI | Non-GFI | — | **CHU7N7NS** |
| 20 | 5-20R2GFI | — | — | Non-GFI | — | — | **CHU7NS** |

***Notes***

① The "X" suffix indicates that a six circuit interior is provided, instead of the standard four circuit interior.

② Includes 60 A two-pole main breaker for service disconnect ratings.

Contact your local Eaton sales office for configurations not listed.

## Surface Type, continued

**Metered Ring CHM1G7NS**

**Metered Ringless Type CHR4N7NS**

**Metered Ring or Ringless Type Bottom Feed**

| Ampere Series | Receptacle Description Position Left | Center | Right | Breaker Description 1st | 2nd | 3rd | Catalog Number |
|---|---|---|---|---|---|---|---|
| **Metered—Ring** | | | | | | | |
| 50/20/20 | 14-50R | 5-20R2GFI | 5-20R2GFI | GFI | Non-GFI | Non-GFI | **CHM1G7N7NS** |
| 20/20 | 5-20R2GFI | 5-20R2GFI | — | Non-GFI | Non-GFI | — | **CHM7N7NS** |
| 20/20/20 | 5-20R2GFI | 5-20R2GFI | 6-20R2 | Non-GFI | Non-GFI | GFI | **CHM7N7N5GS** |
| 20/20/20 | 5-20R2GFI | 5-20R2GFI | 6-20R2 | Non-GFI | Non-GFI | Non-GFI | **CHM7N7N5NS** |
| 50/30/20 | 14-50R | 5-20R2GFI | TT-30R | Non-GFI | Non-GFI | Non-GFI | **CHM1N7N4NS** |
| 50/20 | 14-50R | 5-20R2GFI | — | Non-GFI | Non-GFI | — | **CHM1N7NS** |
| 20/20 | 6-20R2 | 5-20R2GFI | — | Non-GFI | Non-GFI | Non-GFI | **CHM5N7NS** |
| **Metered—Ringless** | | | | | | | |
| 50/20 | 14-50R | 5-20R2GFI | — | GFI | Non-GFI | — | **CHR1G7NS** |
| 20/20 | 5-20R2GFI | 5-20R2GFI | — | Non-GFI | Non-GFI | — | **CHR7N7NS** |
| 50/20/20 | 14-50R | 5-20R2GFI | 5-20R2GFI | GFI | Non-GFI | Non-GFI | **CHR1G7N7NS** |
| 50/20 | 14-50R | 5-20R2GFI | — | Non-GFI | Non-GFI | — | **CHR1N7NS** |
| 20/20/20 | 5-20R2GFI | 5-20R2GFI | 5-20R2GFI | Non-GFI | Non-GFI | Non-GFI | **CHR7N7N7NS** |
| 20/20/20 | 5-20R2WR | 5-20R2WR | 6-20R2WR | GFI | GFI | GFI | **CHR2G2GKGS** |
| 30/20/20 | 14-30R | 5-20R2GFI | 5-20R2GFI | Non-GFI | Non-GFI | Non-GFI | **CHR3N7N7NS** |
| 50/30/20 | 14-50R | 5-20R2GFI | TT-30R | Non-GFI | Non-GFI | Non-GFI | **CHR1N7N4NS** |
| **Metered—Ring—Bottom Fed** | | | | | | | |
| 20/20 | 5-20R2GFI | 5-20R2GFI | — | Non-GFI | Non-GFI | — | **CHM7N7NSU** |
| 20/20/20 | 5-20R2GFI | 5-20R2GFI | 6-20R2 | Non-GFI | Non-GFI | GFI | **CHM7N7N5GSU** |
| 50/20/20 | 14-50R | 5-20R2GFI | 5-20R2GFI | GFI | Non-GFI | Non-GFI | **CHM1G7N7NSU** |
| **Metered—Ringless—Bottom Fed** | | | | | | | |
| 20/20 | 5-20R2GFI | 5-20R2GFI | — | Non-GFI | Non-GFI | — | **CHR7N7NSU** |
| 50/20 | 14-50R | 5-20R2GFI | — | GFI | Non-GFI | — | **CHR1G7NSU** |
| 50/20 | 10-50R | 5-20R2GFI | — | GFI | Non-GFI | — | **CHR2G7NSU** |
| 20/20/20 | 5-20R2WR | 5-20R2WR | 6-20R2WR | GFI | GFI | GFI | **CHR2G2GKGSU** |
| 20/20/20 | 5-20R2GFI | 5-20R2GFI | 6-20R2 | Non-GFI | Non-GFI | GFI | **CHR7N7N5GSU** |
| 20/20/20 | 5-20R2GFI | 5-20R2GFI | 6-20R2 | Non-GFI | Non-GFI | Non-GFI | **CHR7N7N5NSU** |
| 20/20/20 | 5-20R2GFI | 5-20R2GFI | 5-20R2GFI | Non-GFI | Non-GFI | Non-GFI | **CHR7N7N7NSU** |
| 30/20/20 | 14-30R | 5-20R2GFI | 5-20R2GFI | Non-GFI | Non-GFI | Non-GFI | **CHR3N7N7NSU** |
| 30/20/20 | 14-30R | 5-20R2GFI | 5-20R2GFI | GFI | Non-GFI | Non-GFI | **CHR3G7N7NSU** |
| 50/20/20 | 14-50R | 5-20R2GFI | 5-20R2GFI | GFI | Non-GFI | Non-GFI | **CHR1G7N7NSU** |
| 50/20/30 | 14-50R | 5-20R2GFI | TT-30R | Non-GFI | Non-GFI | Non-GFI | **CHR1N7N4NSU** |

### Accessories

See **Page V1-T5-7**.

## Dimensions

Approximate Dimensions in Inches (mm)

### Single Receptacle

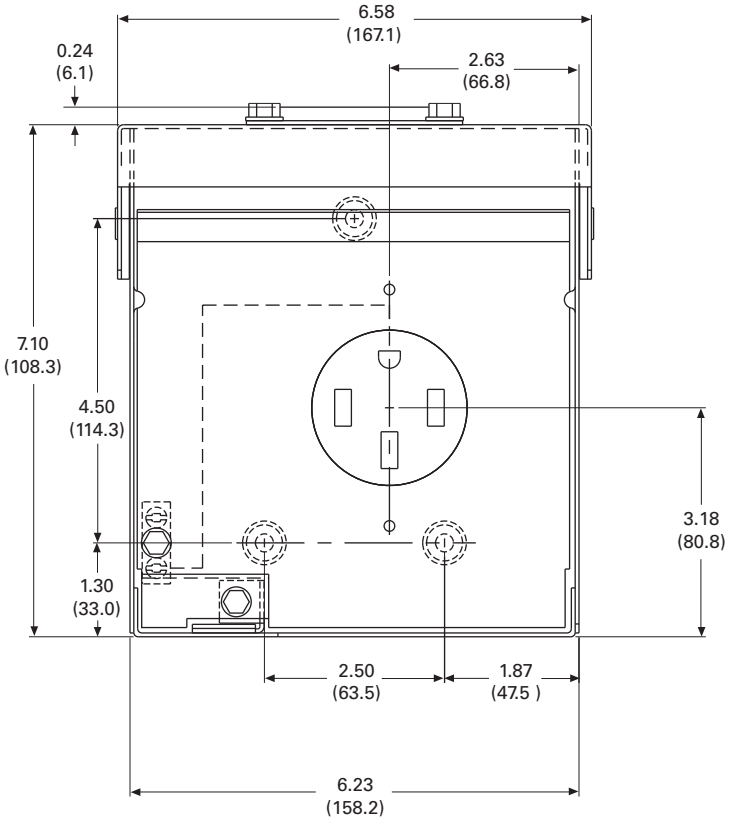


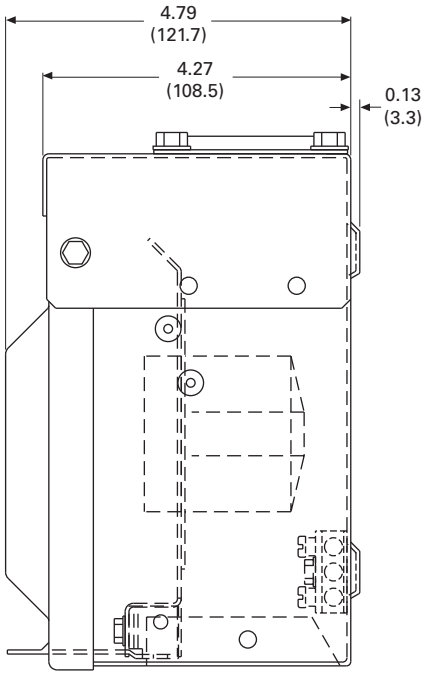

Approximate Dimensions in Inches (mm)

## Compact Design Option

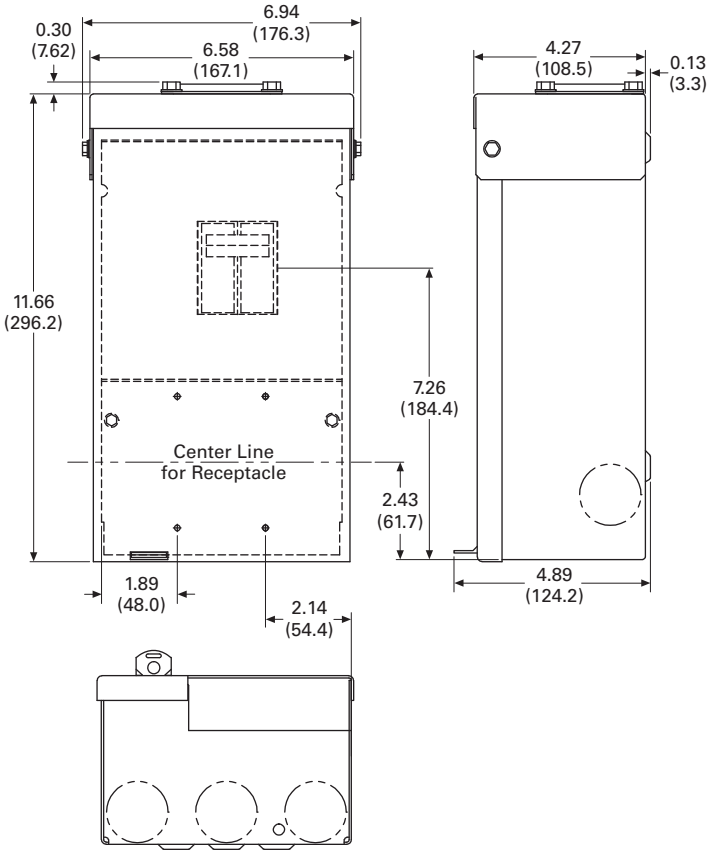


***Unmetered Units***

## Unmetered Surface Type

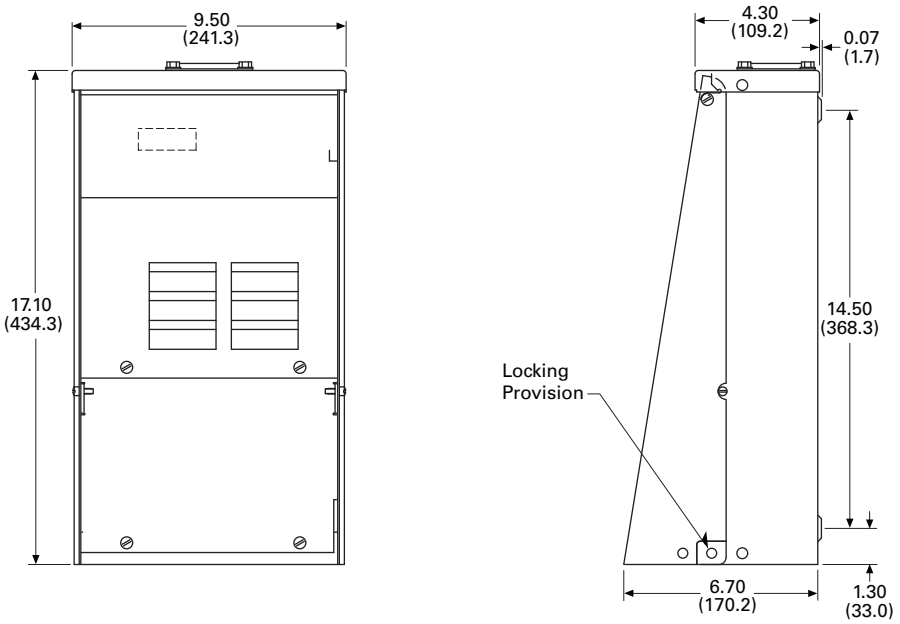

Approximate Dimensions in Inches (mm)

***Metered Units (Ring and Ringless)***

## Metered Surface Type

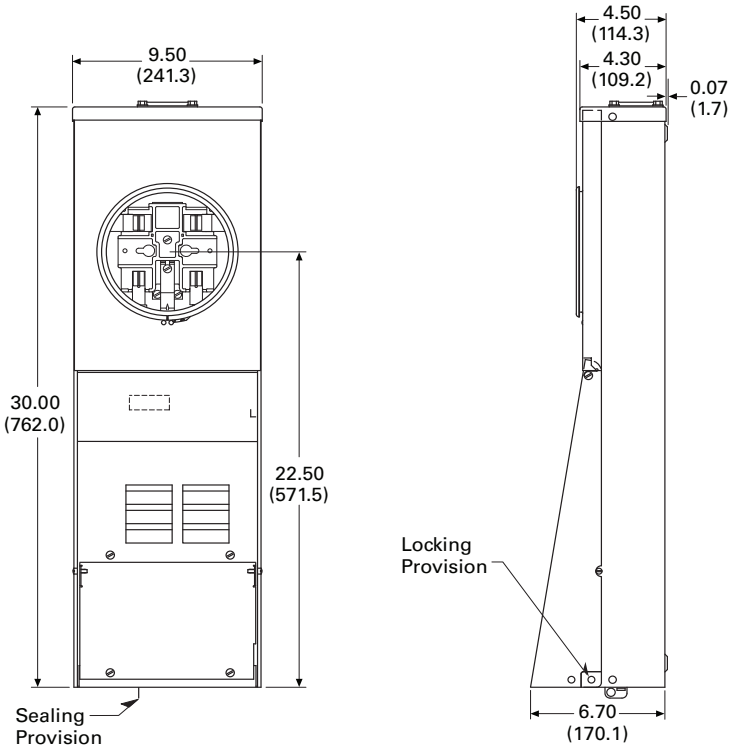


## Bottom Fed Type

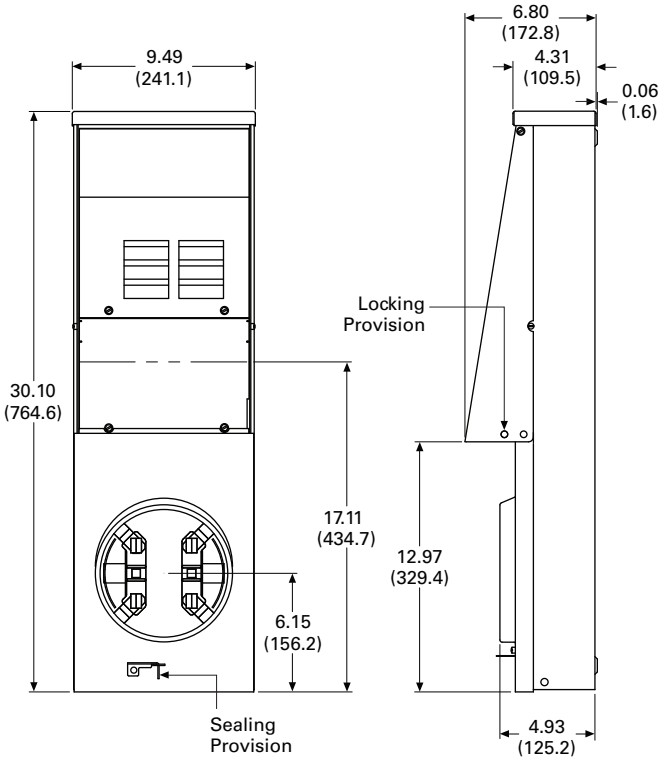

**Power Outlet Panels**

## Contents


| *Description* | *Page* |
|---|---|
| Product Overview | **V1-T5-3** |
| Surface Units | **V1-T5-10** |
| Pedestal Units | **V1-T5-16** |
| Dimensions | **V1-T5-18** |




## Pedestal Units

### Product Overview

A power outlet panel (or POP) is a device designed for outdoor service to meet temporary power requirements at construction sites and recreation vehicle (RV) parks. POPs provide a safe and reliable means for users to access electricity at such locations.

### Product Selection

***Power Outlet Panel Receptacle Configuration Rules***

See **Page V1-T5-7** for complete list.

**Four Receptacles/Unit**

All receptacles must be NEMA 5-20R2 and/or NEMA 5-20R2GFI, surface mount only.

**Three Receptacles/Unit**

- One or more of the receptacles must be NEMA 6-20R2, NEMA 5-20R2 or NEMA 5-20R2GFI
- NEMA 6-20R2, NEMA 5-20R2, or NEMA 5-20R2GFI must go in the second position
- If two receptacles consist of types NEMA 14-50R, NEMA 10-50R, NEMA 14-30R or NEMA 6-20R2 a six-circuit interior must be added
  - Example: **CHUIN5N2NSX**

**Note:** Configuration 1 and 2 were chosen so a six-circuit interior needs to be added (suffix X) to the end of the catalog number. Also, configuration 5 is in the second position.

**Two, One and Zero Receptacles/Unit**

Any configuration.

**Options**

- Six-circuit interior
- Factory-mounted pedestal extension
- Lighted
- Bottom fed

Unmetered Type

CHM1N7N4NPTZ

## Pedestal Type

| Ampere Series | Receptacle Description Position Left | Center | Right | Breaker Description 1st | 2nd | 3rd | Catalog Number |
|---|---|---|---|---|---|---|---|
| **Unmetered** | | | | | | | |
| 50/30/20 | 14-50R | 5-20R2GFI | TT-30R | Non-GFI | Non-GFI | Non-GFI | **CHU1N7N4NP** |
| 30/20 | TT-30R | 5-20R2GFI | — | Non-GFI | Non-GFI | — | **CHU4N7NP** |
| 50/30/20 | 14-50R | 5-20R2GFI | TT-30R | Non-GFI | Non-GFI | Non-GFI | **CHU1N7N4NPTZ** |
| 30/30/20 | TT-30R | 5-20R2GFI | TT-30R | Non-GFI | Non-GFI | Non-GFI | **CHU4N7N4NP** |
| 30/20 | TT-30R | 5-20R2GFI | — | Non-GFI | Non-GFI | — | **CHU4N7NPTZ** |
| **Metered—Ring** | | | | | | | |
| 50/30/20 | 14-50R | 5-20R2GFI | TT-30R | Non-GFI | Non-GFI | Non-GFI | **CHM1N7N4NP** |
| 50/20 | 14-50R | 5-20R2GFI | — | Non-GFI | Non-GFI | — | **CHM1N7NP** |
| 50/30/20 | 14-50R | 5-20R2GFI | TT-30R | Non-GFI | Non-GFI | Non-GFI | **CHM1N7N4NPTZ** |
| 30/20 | TT-30R | 5-20R2GFI | — | Non-GFI | Non-GFI | — | **CHM4N7NPTZ** |
| **Metered—Ringless** | | | | | | | |
| 50/30/20 | 14-50R | 5-20R2GFI | TT-30R | Non-GFI | Non-GFI | Non-GFI | **CHR1N7N4NP** |
| 50/20/50 | 14-50R | 5-20R2GFI | 14-50R | Non-GFI | Non-GFI | Non-GFI | **CHR1N7N1NPX** |
| 50/20/30 | 14-50R | 5-20R2GFI | 14-30R | Non-GFI | Non-GFI | Non-GFI | **CHR1N7N3NPX** |
| 50/20/30 | 14-50R | 5-20R2 | 14-30R | Non-GFI | Ground fault | Non-GFI | **CHR1N6G3NPX** |

CHU1N7N4NBTZ

## Back-to-Back Pedestal Type

| Ampere Series | Receptacle Description Position Left | Center | Right | Breaker Description 1st | 2nd | 3rd | Catalog Number |
|---|---|---|---|---|---|---|---|
| **Unmetered** ① | | | | | | | |
| 30/30/20 | TT-30R | 5-20R2GFI | TT-30R | Non-GFI | Non-GFI | Non-GFI | **CHU4N7N4NB** |
| 50/30/20 | 14-50R | 5-20R2GFI | TT-30R | Non-GFI | Non-GFI | Non-GFI | **CHU1N7N4NBTZ** |
| **Metered—Ring** ① | | | | | | | |
| 30/20 | TT-30R | 5-20R2GFI | — | Non-GFI | Non-GFI | — | **CHM4N7NB** |
| 50/30/20 | 14-50R | 5-20R2GFI | TT-30R | Non-GFI | Non-GFI | Non-GFI | **CHM1N7N4NB** |
| **Metered—Ringless** ① | | | | | | | |
| 50/30/20 | 14-50R | 5-20R2GFI | TT-30R | Non-GFI | Non-GFI | Non-GFI | **CHR1N7N4NBTZ** |

***Notes***

① The pedestal back-to-back units have receptacles and circuit breakers as shown for each panel and share one common pedestal with loop feed lugs. Contact your local Eaton sales office for configurations not listed.

## Accessories

See **Page V1-T5-7**.

## Dimensions

Approximate Dimensions in Inches (mm)

***Metered Units***

**100 A Pedestal**

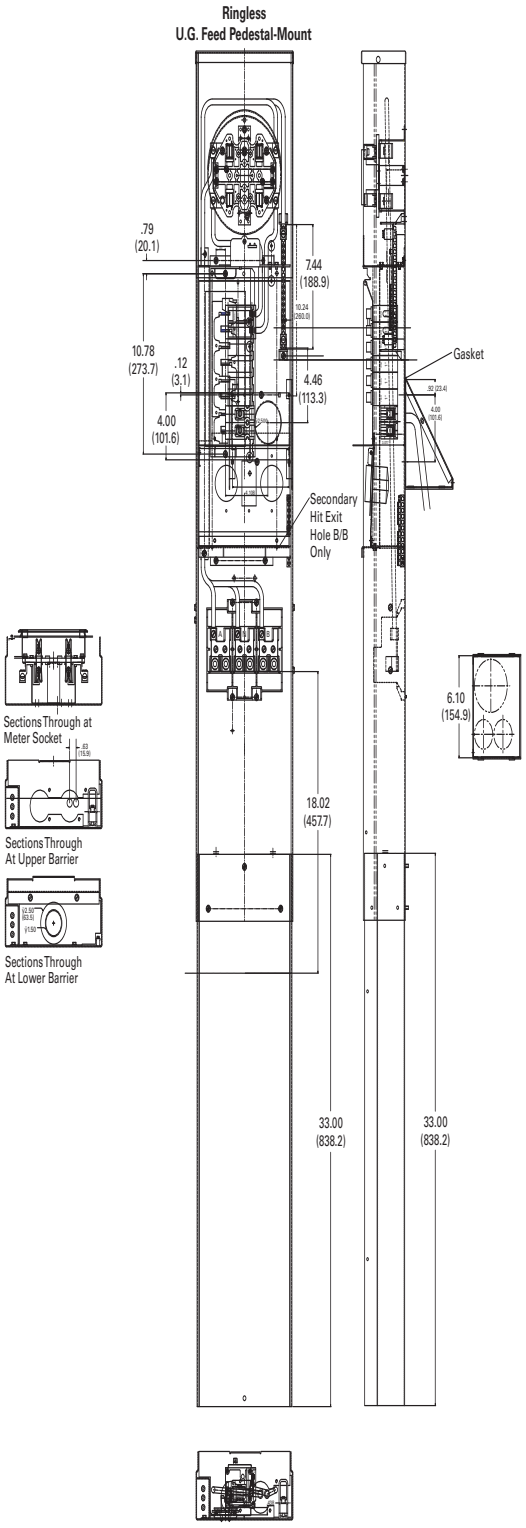

Approximate Dimensions in Inches (mm)

***Metered Units (Ring and Ringless)***

## Metered Back-to-Back Pedestal Type

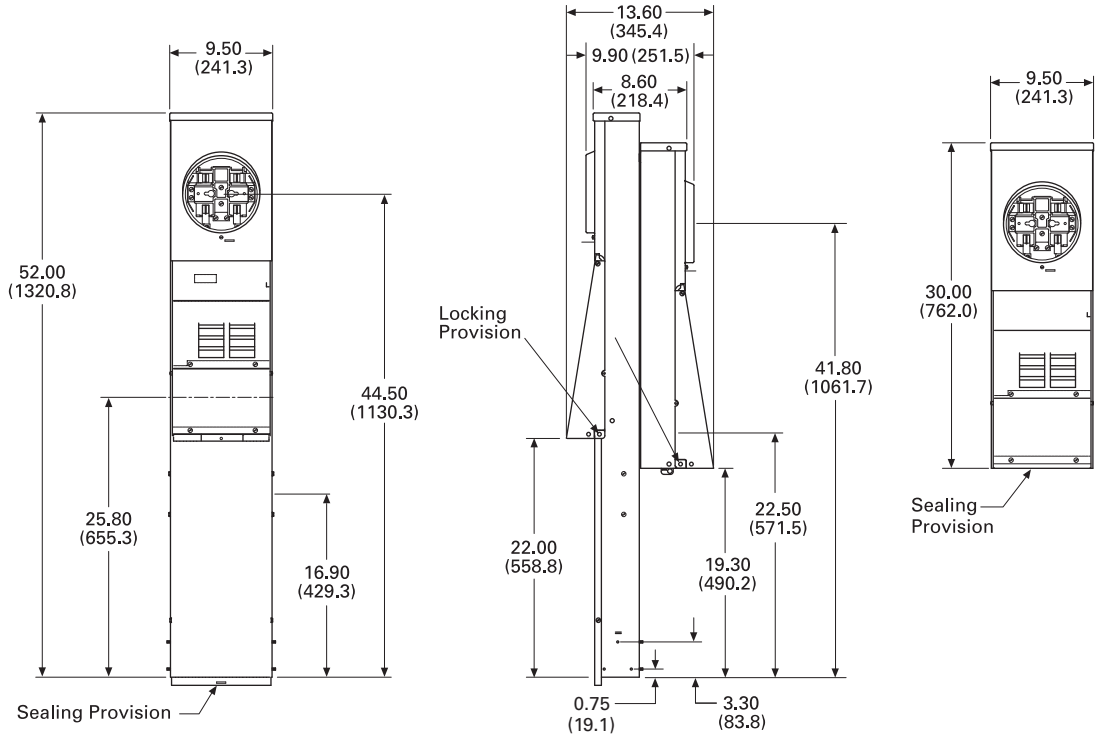


## Bottom Fed Type

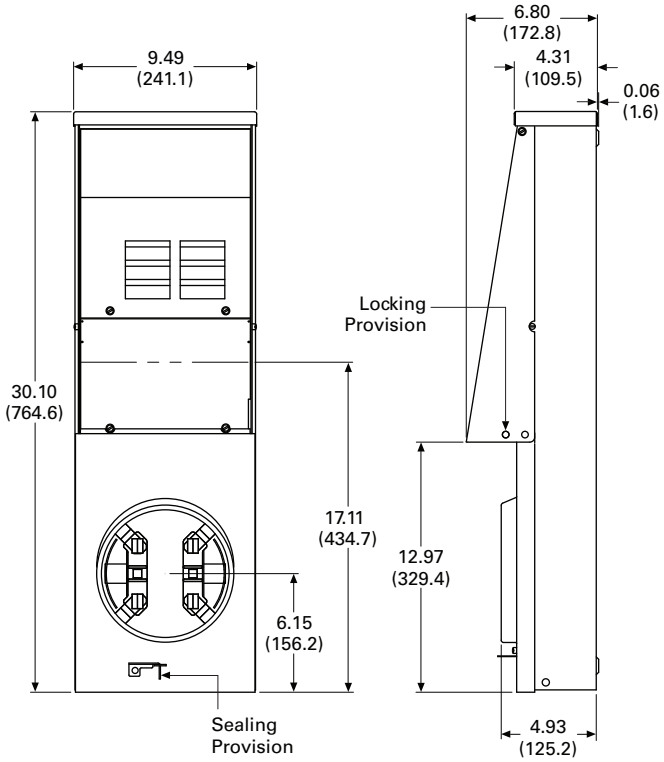

Approximate Dimensions in Inches (mm)

### Unmetered Back-to-Back Pedestal Type

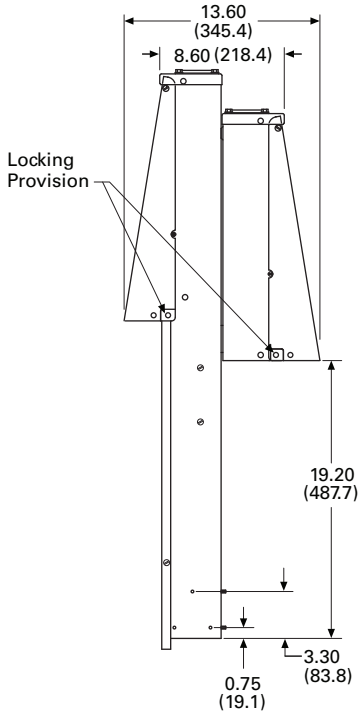


### Unmetered Pedestal Type

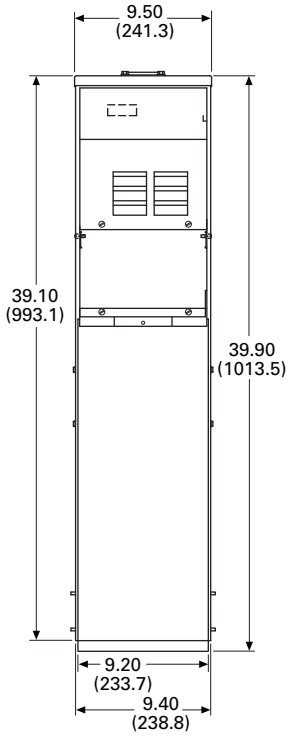


### Metered Pedestal Type

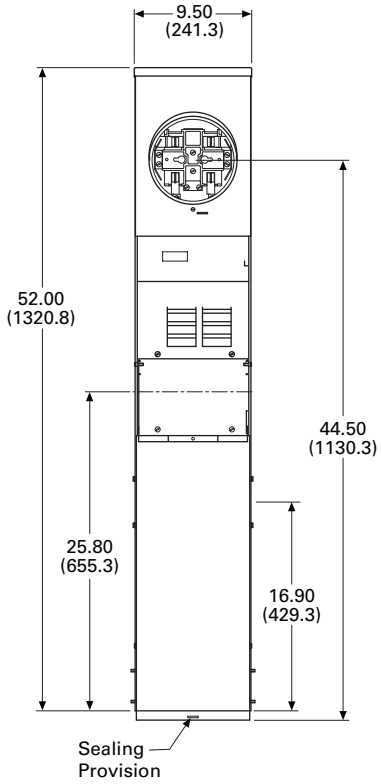


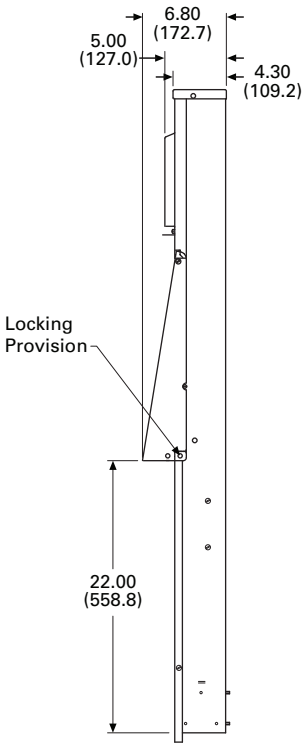

**Power Outlet Panels**

## Contents

| *Description* | *Page* |
|---|---|
| Mobile Home Panels | |
| Catalog Number Selection | **V1-T5-22** |
| Product Selection | **V1-T5-22** |
| Accessories | **V1-T5-23** |
| Dimensions | **V1-T5-24** |



## Product Overview

Eaton's versatile Mobile Home Panels have a user-friendly design that allows for a faster, cleaner installation.

100 and 200 A panels come complete with the main breaker and a 4/8 or 8/16 interior, respectively. The 200 A units are designed with ample width to ensure plenty of room for wire bending and an easier installation.

### Receptacle Deadfront Kits

Optional receptacle deadfront kits enable the field installation of contractor supplied receptacles and breakers that can supply power for a variety of applications including:

- Visiting RVs
- Temporary power
- Lawn equipment
- Air compressors
- Anything else that requires cord-connected power

## Features

### Fastenerless Socket Design

- Eliminates overheating caused by loose socket connections

### Pedestal Unit

- Convenient and sturdy ground mounting
- Loop feed feature allows several units to be connected in series

### Easier, Better and Faster Installation

- More wire bending and viewing room
- Additional circuits mean more flexibility

## Catalog Number Selection

### Mobile Home Panels

**MH M 100 P 1 N 4 N**

**Type**
**MH** = Mobile Home Panel

**Metering Type**
**M** = Metered-ring
**R** = Metered-ringless

**Amperes**
**100**
**150**
**200**

**Mounting**
**P** = Pedestal
**B** = Back-to-back

**Optional Receptacle Type Position 1**
**1** = NEMA 14-50R
**3** = NEMA 14-30R
**4** = NEMA TT-30R
**5** = NEMA 6-20R2
**6** = NEMA 5-20R2
**7** = NEMA 5-20R2GFI
**8** = NEMA 5-20R2GFI (WR)
**9** = NEMA 5-20R2GFI (WR/TR)
**Blank** = No receptacle

**Circuit Breaker Type Position 1**
**N** = Non-ground fault
**G** = Ground fault

**Optional Receptacle Type Position 2**
**1** = NEMA 14-50R
**3** = NEMA 14-30R
**4** = NEMA TT-30R
**5** = NEMA 6-20R2
**6** = NEMA 5-20R2
**7** = NEMA 5-20R2GFI
**8** = NEMA 5-20R2GFI (WR)
**9** = NEMA 5-20R2GFI (WR/TR)
**Blank** = No receptacle

**Circuit Breaker Type Position 2**
**N** = Non-ground fault
**G** = Ground fault

## Product Selection

**Mobile Home Panel**

### Mobile Home Panels ①

| Amperes | Security | Interior | Main | Branch Breakers | Mounting | Receptacles | Catalog Number |
|---|---|---|---|---|---|---|---|
| 100 | Ring | 4/8 | **BR2100** | BR | Pedestal | None | **MHM100P** |
| 100 | Ring | 4/8 | **BR2100** | BR | Back-to-back | None | **MHM100B** |
| 100 | Ringless | 4/8 | **BR2100** | BR | Pedestal | None | **MHR100P** |
| 100 | Ringless | 4/8 | **BR2100** | BR | Back-to-back | None | **MHR100B** |
| 150 | Ring | 8/16 | **CSR2150** | BR | Pedestal | None | **MHM150P** |
| 150 | Ring | 8/16 | **CSR2150** | BR | Back-to-back | None | **MHM150B** |
| 150 | Ringless | 8/16 | **CSR2150** | BR | Pedestal | None | **MHR150P** |
| 150 | Ringless | 8/16 | **CSR2150** | BR | Back-to-back | None | **MHR150B** |
| 200 | Ring | 8/16 | **CSR2200** | BR | Pedestal | None | **MHM200P** |
| 200 | Ring | 8/16 | **CSR2200** | BR | Back-to-back | None | **MHM200B** |
| 200 | Ringless | 8/16 | **CSR2200** | BR | Pedestal | None | **MHR200P** |
| 200 | Ringless | 8/16 | **CSR2200** | BR | Back-to-back | None | **MHR200B** |
| 200 | Ringless | 8/16 | **CSR2200** | BR | Pedestal | Qty 1 14-50R<br>Qty 2 TT-30R | **MHM200P1N4N4N** |

***Note***
① Pedestal Extension included with Mobile Home Panels.

***Mobile Home Panel Deadfronts for 200 A Units*** ①

### Available Receptacle Deadfront Kits—Receptacles and Breakers Not Included

MHDX

MHDXX

MHDBLANK

MHDZ

MHDZZ

MHDZZZ

MHDZZZZ

MHDY

MHDYY

MHDYYY

MHDYYYY

MHDXZX

MHDZZY

MHDYZ

MHDYZY

MHDXYX

MHDXYY

MHDXY

MHDXZY

MHDXZ

MHDXZZ

## Accessories

### Mobile Home Panels

Hubs not used on mobile home panels.

| Description | Amperes | Catalog Number |
|---|---|---|
| Direct feed kit | — | **MHDFK** |
| Pedestal extension | 200 | **MHPEDEXT** |
| Stainless steel pedestal extension | 200 | **MHPEDEXTSS** |
| Padmount adapter | 200 | **MHPADEXT** |
| Pedestal extension | 100 | **CHPEDEXT100** |
| Stainless steel pedestal extension | 100 | **CHPEDESTSS100** |
| Padmount adapter | 100 | **CHPADEXT100** |

***Note***

① For 100 A units, the accessory Catalog Number would be MHD1____. For example, to order a deadfront to accept one 30 A receptacle (round) in a 100 ampere device, the Catalog Number would be MHD1X.

## Dimensions

Approximate Dimensions in Inches (mm)

### Mobile Home Panel—Ringless—Pedestal Mounting

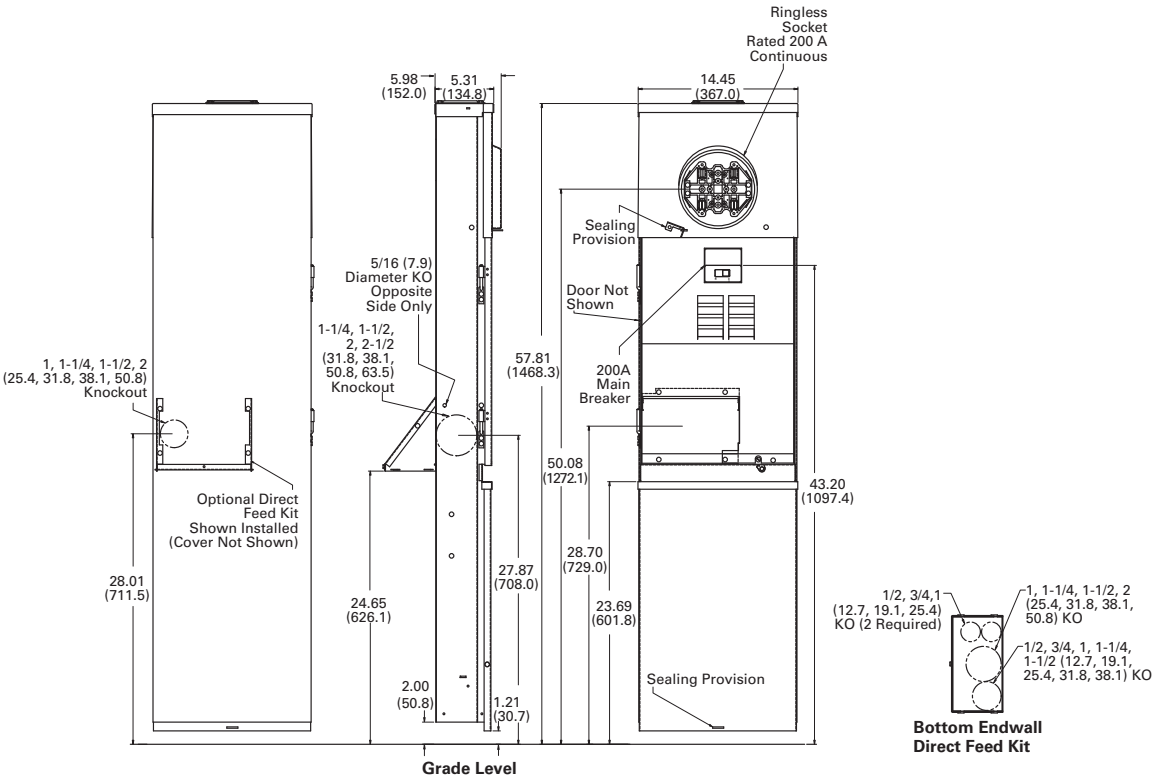

Approximate Dimensions in Inches (mm)

## Mobile Home Panel—Ringless—Back-to-Back Mounting

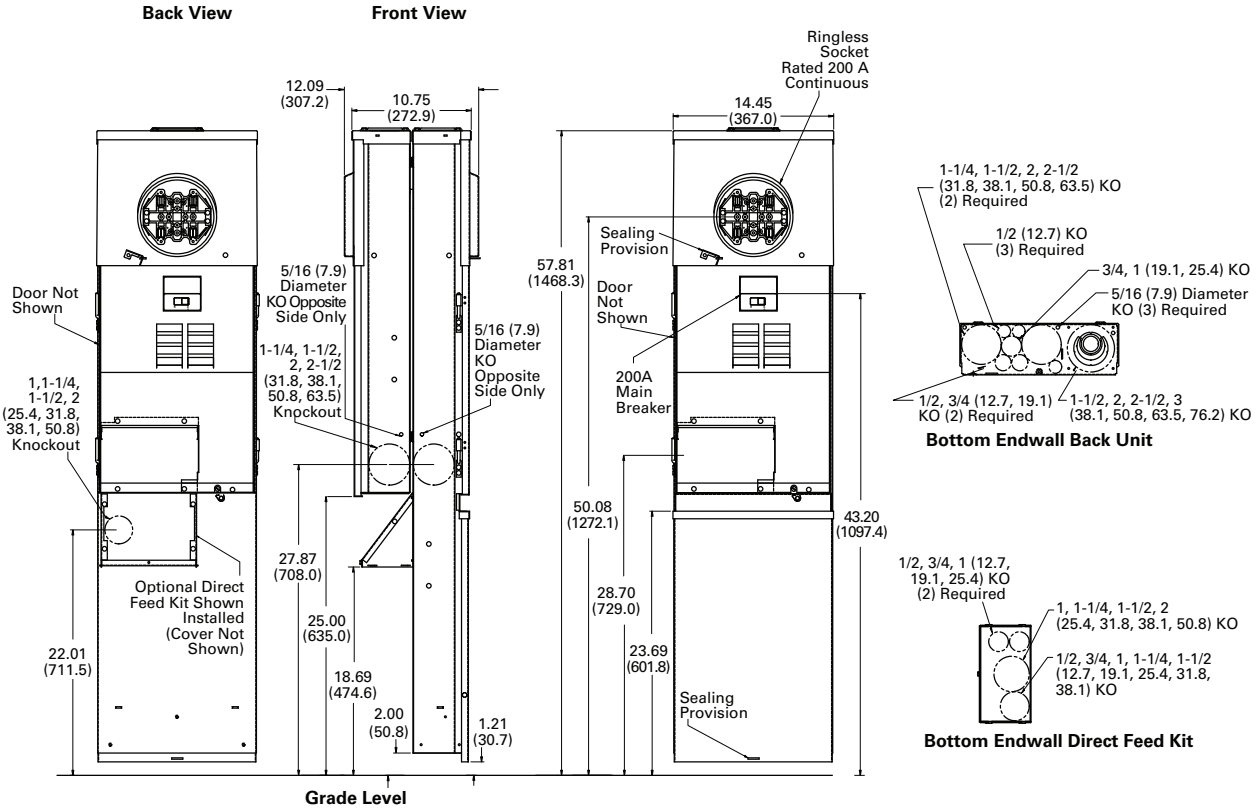

Approximate Dimensions in Inches (mm)

## Mobile Home Panel—Ring—Pedestal Mounting

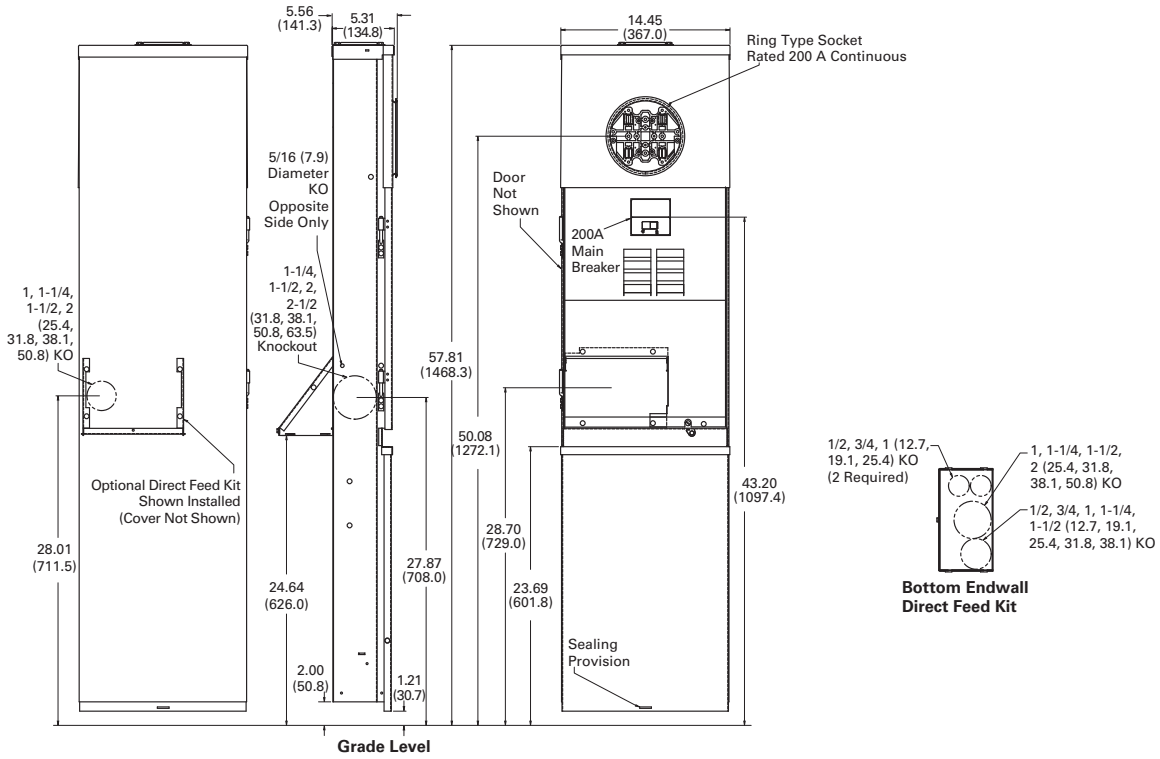

Approximate Dimensions in Inches (mm)

## Mobile Home Panel—Ring—Back-to-Back Mounting

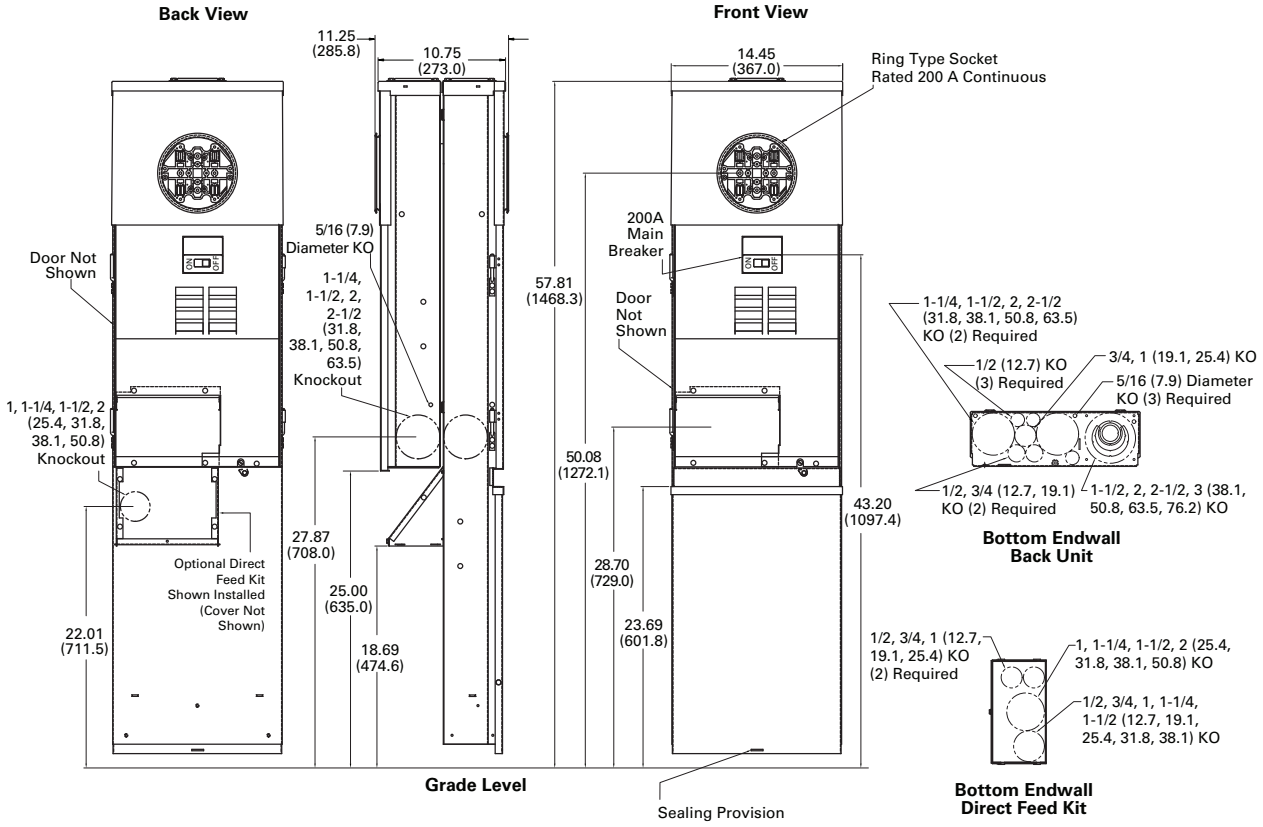

**Recreational Vehicle/Campground Products**

***High-Quality, Weatherproof Electrical Equipment***

## Contents

***Description***

Power Pedestals
Product Selection Guide . . . . . **V1-T5-29**
Powerhouse Power Pedestal . . . . . **V1-T5-30**
Powerhouse—Stainless Steel (SS) Power Pedestal **V1-T5-33**
Newport Camp Mate Power Pedestal . . . . . **V1-T5-36**
Park Light Power Pedestal . . . . . **V1-T5-39**
Firehouse . . . . . **V1-T5-42**
Digital Electronic Kilowatthour Meters . . . . . **V1-T5-44**
Distribution Equipment—Ground Fault Monitor . . **V1-T5-45**
Distribution Equipment—Substations. . . . . **V1-T5-46**
Distribution Equipment—Panels. . . . . **V1-T5-49**
Distribution Equipment—Transformers. . . . . **V1-T5-50**

## Power Pedestals

### Product Overview

On March 24, 2006, RV Park Hook-Ups® joined together with Eaton to provide unmatched products and services in the recreational vehicle industry, as well as the marina industry. Known as the leader in electrical control, power distribution, and industrial automation products and services, Eaton is a quality driven company that constantly looks for ways to provide enhanced products and service solutions for their customers. Eaton will be able to provide RV park developers a complete electrical solution. For more information on the other products available from Eaton, visit us online at www.eaton.com or www.rvparkhookups.com

***What Eaton has to Offer***

- Complementary comprehensive in-house electrical designs for your complete RV or marina development
- RV and marina power pedestals
- Custom substations
- Transformers
- Panels
- Wire
- Digital electronic meters
- Receptacles and breakers
- Specialized electrical parts and equipment

## Product Selection Guide

### Power Receptacles

| Power Outlets | | | Maximum GFI | | | |
|---|---|---|---|---|---|---|
| **Side One** | **Side Two** | **Phase** | **Powerhouse** | **Powerhouse–SS** | **Newport Camp Mate** | **Park Light** |
| None | None | 1 | 2 | 2 | 2 | 2 |
| 30–20 | 00 | 1 | 2 | 2 | 1 | 1 |
| 30–20 | 30–20 | 1 | 2 | 2 | — | — |
| 30–30–20 | 30–30–20 | 1 | 2 | 2 | — | — |
| 30–20 | 50–20 | 1 | 2 | 2 | — | — |
| 30–30–20 | 50–20 | 1 | 2 | 2 | — | — |
| 30–30–20 | 30–50–20 | 1 | 2 | 2 | — | — |
| 30–30–20 | 50–50–20 | 1 | 2 | 2 | — | — |
| 30–50–20 | 30–50–20 | 1 | 2 | 2 | — | — |
| 30–50–20 | 50–50–20 | 1 | 2 | 2 | — | — |
| 50–20 | None | 1 | 2 | 2 | — | — |
| 50–20 | 50–20 | 1 | 2 | 2 | — | — |
| 50–50–20 | 50–20 | 1 | 2 | 2 | — | — |
| 50–50–20 | 50–50–20 | 1 | 2 | 2 | — | — |
| 30–50–20 | None | 1 | 2 | 2 | 0 | — |

**Powerhouse Power Pedestal**

## Contents


| *Description* | *Page* |
|---|---|
| Power Pedestals | **V1-T5-28** |
| Powerhouse Power Pedestal | |
| Standards and Certifications | **V1-T5-31** |
| Catalog Number Selection | **V1-T5-31** |
| Accessories | **V1-T5-32** |
| Dimensions | **V1-T5-32** |
| Powerhouse—Stainless Steel (SS) Power Pedestal | **V1-T5-33** |
| Newport Camp Mate Power Pedestal | **V1-T5-36** |
| Park Light Power Pedestal | **V1-T5-39** |
| Firehouse | **V1-T5-42** |
| Digital Electronic Kilowatthour Meters | **V1-T5-44** |
| Distribution Equipment—Ground Fault Monitor | **V1-T5-45** |
| Distribution Equipment—Substations | **V1-T5-46** |
| Distribution Equipment—Panels | **V1-T5-49** |
| Distribution Equipment—Transformers | **V1-T5-50** |


## Powerhouse Power Pedestal

### Product Description

The Powerhouse® RV utility center is our most popular pedestal for single or double RV sites because of its full complement of standard features and available option packages able to meet any user requirement. The housing is made of durable weatherproof engineered resin and will never rust or deteriorate.

That's why it comes with a limited lifetime warranty. Since the Powerhouse can accommodate two RV sites, it's an economical pedestal for double site installation. This unit is ideal for new, or when retrofitting, full-service RV parks.

### Features

- Photocell controlled 13 watt fluorescent light with amber lens
- Lockable weatherproof doors that protect receptacles and breakers
- Hose and cable brackets
- Engineered resin housing with a two-part polyurethane coating for a UV-resistant, long-lasting finish
- Limited lifetime warranty on the housing
- Loop-feed mechanical busbars that can accept up to 250 kcmil wire
- Hinged pedestal base providing easy access for installation and maintenance

***Surge Protection***

SurgeTrap is designed to protect electrical and electronic loads from transients and surge disturbances on your AC power line, such as voltage surges, spikes and lighting. The SurgeTrap has a lifetime warranty where Eaton will replace the SurgeTrap device at no charge.

- 175 kA maximum surge current
- 3500 joules
- Type 3R enclosure
- Comes with a protection working indicator light
- Factory installed integral to pedestal or available for retrofit

### Available Options

- Clear lens
- Photocell controlled single or dual 7 watt or 13 watt fluorescent light
- Telephone (RJ-11) for each side
- Cable TV for each side
- High-speed Internet connector (RJ-45) for each side
- Water—single or dual 1/4-turn brass ball valves (brass "T" connection) with 3/4-inch hose bibs
- Water meters with remote capability
- Water—anti-siphon faucet
- Loop-feed 3/8-inch stud lug copper busbar for up to 250 kcmil wire (recommended for salt water environments)
- Single-feed mechanical busbars for up to 250 kcmil wire
- Digital electronic meter for each side
- Wireless remote reading of electronic kilowatt meters
- Meter socket for each side powered (to accept glass style meter)
- Direct burial ground mounting stand stainless or galvanized
- Custom paint color

## Standards and Certifications

- UL/CSA listed

Listed

## Catalog Number Selection

**P D U 4 7 0 0 0 0 0 0 1 2 K M**

**Type**

| | |
|---|---|
| **P** | = Powerhouse |
| **Z** | = PHSS |

**Lighting and Lens Color**

| | | |
|---|---|---|
| **A** | = 7 W light | Amber |
| **B** | = Dual 7 W light | Amber |
| **C** | = 9 W light | Amber |
| **D** | = 13 W light | Amber |
| **E** | = Dual 13 W light | Amber |
| **F** | = No lighting | Amber |
| **G** | = 7 W light | Clear |
| **H** | = Dual 7 W light | Clear |
| **I** | = 9 W light | Clear |
| **J** | = 13 W light | Clear |
| **K** | = Dual 13 W light | Clear |
| **L** | = No lighting | Clear |
| **M** | = 7 W light | Special |
| **N** | = Dual 7 W light | Special |
| **O** | = 9 W light | Special |
| **P** | = 13 W light | Special |
| **Q** | = Dual 13 W light | Special |
| **R** | = No lighting | Special |
| **S** | = 350 MA LED | Amber |
| **T** | = 700 MA LED | Amber |
| **U** | = 350 MA LED | Clear |
| **V** | = 700 MA LED | Clear |
| **W** | = 350 MA LED | Special |
| **Y** | = 700 MA LED | Special |

**Metering Type**

| | |
|---|---|
| **U** | = Unmetered |
| **D** | = Digital electronic meters (side one) |
| **T** | = Digital electronic meters (side two) |
| **B** | = Digital electronic meters (both sides) |
| **R** | = Receptacles metered individually |
| **M** | = One meter socket (100 A) |
| **N** | = Two meter socket (100 A each) |

**Sides and Receptacles**

| R1S1 | R2S1 | R3S1 | R4S1 | R1S2 | R2S2 | R3S2 | R4S2 |
|---|---|---|---|---|---|---|---|
| 0 | 0 | 0 | 0 | 0 | 0 | 0 | 0 |
| 1 | 1 | 1 | 1 | 1 | 1 | 1 | 1 |
| 2 | 2 | 2 | 2 | 2 | 2 | 2 | 2 |
| 3 | 3 | 3 | 3 | 3 | 3 | 3 | 3 |
| 4 | 4 | 4 | 4 | 4 | 4 | 4 | 4 |
| 5 | 5 | 5 | 5 | 5 | 5 | 5 | 5 |
| 6 | 6 | 6 | 6 | 6 | 6 | 6 | 6 |
| 7 | 7 | 7 | 7 | 7 | 7 | 7 | 7 |
| 8 | 8 | 8 | 8 | 8 | 8 | 8 | 8 |

| | |
|---|---|
| **0** | = None |
| **1** | = 20 A GFI duplex |
| **2** | = 30 A, 125 V |
| **4** | = 50 A, 125/250 V |
| **5** | = 100 A, 208 V |
| **6** | = 100 A, 250 V |
| **7** | = 100 A, 277/480 V |
| **8** | = 100 A, 480 V |

**Water Option** ①

| | |
|---|---|
| **0** | = 0 |
| **1** | = 1 |
| **2** | = 2 |
| **3** | = Single water meter |
| **4** | = Dual water meter |
| **5** | = Single meter, 2 V |
| **6** | = 1 frost free |
| **7** | = 2 frost free |

**Extra Unmetered GFI Receptacles**

| | |
|---|---|
| **0** | = None |
| **1** | = 1 |
| **2** | = 2 |

**Phone Cable TV and Internet Options**

| | Phone Jack | Cable TV Jack | Internet Option |
|---|---|---|---|
| **A** = | 1 | 0 | 0 |
| **B** = | 1 | 0 | 1 |
| **C** = | 1 | 0 | 2 |
| **D** = | 1 | 1 | 0 |
| **E** = | 1 | 1 | 1 |
| **F** = | 1 | 1 | 2 |
| **G** = | 1 | 2 | 0 |
| **H** = | 1 | 2 | 1 |
| **I** = | 1 | 2 | 2 |
| **J** = | 2 | 0 | 0 |
| **K** = | 2 | 0 | 1 |
| **L** = | 2 | 0 | 2 |
| **M** = | 2 | 1 | 0 |
| **N** = | 2 | 1 | 1 |
| **O** = | 2 | 1 | 2 |
| **P** = | 2 | 2 | 0 |
| **Q** = | 2 | 2 | 1 |
| **R** = | 2 | 2 | 2 |
| **S** = | 0 | 2 | 2 |
| **T** = | 0 | 0 | 1 |
| **U** = | 0 | 0 | 2 |
| **V** = | 0 | 1 | 0 |
| **W** = | 0 | 1 | 1 |
| **X** = | 0 | 1 | 2 |
| **Y** = | 0 | 2 | 0 |
| **Z** = | 0 | 2 | 1 |
| **0** = | 0 | 0 | 0 |

**Bus**

| | |
|---|---|
| **S** | = Single-phase 3/8-inch copper busbar |
| **F** | = Three-phase 3/8-inch copper busbar |
| **C** | = Single-phase 3/8-inch Canadian busbar |
| **T** | = Three-phase 3/8-inch Canadian busbar |
| **M** | = Single-phase 300 kcmil mechanical lug bus |
| **Z** | = Three-phase 300 kcmil mechanical lug bus |
| **L** | = Single-phase 350 kcmil mechanical lug bus |
| **P** | = Three-phase 350 kcmil mechanical lug bus |
| **N** | = Single-phase 1/4-inch copper busbar |
| **Q** | = Single-phase 1/4-inch split mechanical busbar |
| **A** | = Single-phase 300 kcmil mechanical lug Canadian bus |
| **B** | = Three-phase 300 kcmil mechanical lug Canadian bus |
| **D** | = Single-phase 350 kcmil mechanical lug Canadian bus |
| **E** | = Three-phase 350 kcmil mechanical lug Canadian bus |

Receptacle: R1S1 = Receptacle 1, Side 1
R2S1 = Receptacle 2, Side 1
R3S1 = Receptacle 3, Side 1
R1S2 = Receptacle 1, Side 2
R2S2 = Receptacle 2, Side 2
R3S2 = Receptacle 3, Side 2

***Notes***

① Number represents the quantity of 1/4-turn ball valves with 3/4-inch hose bibs.

Internet option also available. Contact factory for details.

**Accessories**

See **Page V1-T5-75**.

**Dimensions**

Approximate Dimensions in Inches (mm)

**Powerhouse**

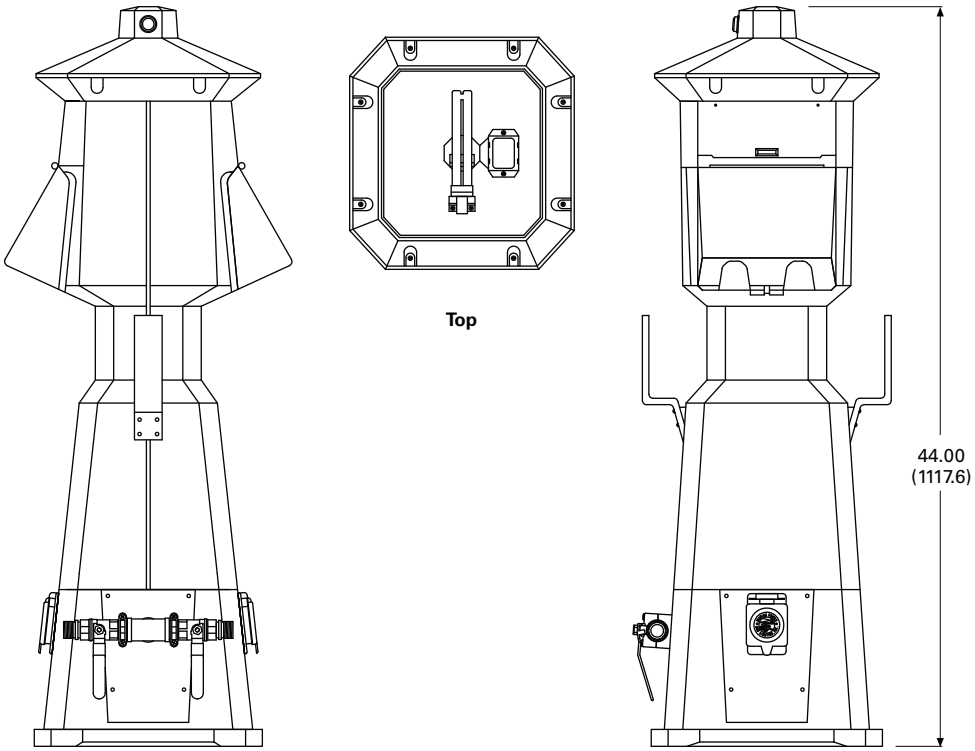


**Side View** **Front View**

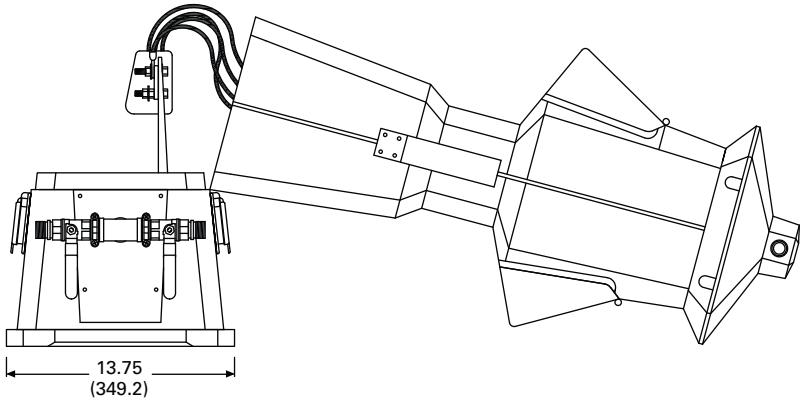


**Broken View**

Powerhouse—Stainless Steel (SS) Power Pedestal

## Contents


| *Description* | *Page* |
|---|---|
| Power Pedestals | **V1-T5-28** |
| Powerhouse Power Pedestal | **V1-T5-30** |
| Powerhouse—Stainless Steel (SS) Power Pedestal | |
| Catalog Number Selection | **V1-T5-34** |
| Accessories | **V1-T5-35** |
| Dimensions | **V1-T5-35** |
| Newport Camp Mate Power Pedestal | **V1-T5-36** |
| Park Light Power Pedestal | **V1-T5-39** |
| Firehouse | **V1-T5-42** |
| Digital Electronic Kilowatthour Meters | **V1-T5-44** |
| Distribution Equipment—Ground Fault Monitor | **V1-T5-45** |
| Distribution Equipment—Substations | **V1-T5-46** |
| Distribution Equipment—Panels | **V1-T5-49** |
| Distribution Equipment—Transformers | **V1-T5-50** |




## Powerhouse—Stainless Steel (SS) Power Pedestal

### Product Description

For long-lasting durability and low maintenance, the new stainless steel Powerhouse–SS pedestal is the most resilient power center offered.

We have designed a stainless steel pedestal that will meet and exceed all applicable codes and withstand harsh inland and coastal environments.

### Features

- Stainless steel housing with a limited lifetime warranty
- Photocell controlled 13 watt fluorescent light with amber lens
- Large removable access panel for easy installation and maintenance
- Weatherproof doors that protect receptacles and breakers
- Backlit faceplate to aid in hooking up at night
- Hose and cable brackets
- Powder-coated finish
- Loop-feed mechanical busbars that can accept up to 350 kcmil wire

### Available Options

- Clear lens
- Photocell controlled single or dual 7 watt or 13 watt fluorescent light
- Telephone (RJ-11) for each side
- Cable TV for each side
- High-speed Internet connection (RJ-45) for each side
- Water–single or dual 1/4-turn brass ball valves (brass "T" connection) with 3/4-inch hose bibs
- Water meters with remote capability
- Water—anti-siphon faucet
- Direct burial stainless steel ground mounting stand
- Lockable doors
- Loop-feed 3/8-inch stud lug copper busbar for up to 350 kcmil wire (recommended for salt water environments)
- Single-feed mechanical busbars for up to 350 kcmil wire
- Digital electronic metering for each side
- Wireless remote reading of electronic kilowatt meters
- Meter socket for each side powered (to accept glass style meter)
- Four door design to add more outlets per pedestal

## Catalog Number Selection

**Z D U 4 7 0 0 0 0 0 0 1 2 K M**

**Type**

| | |
|---|---|
| **P** | = Powerhouse |
| **Z** | = PHSS |

**Lighting and Lens Color**

| | | |
|---|---|---|
| **A** | = 7 W light | Amber |
| **B** | = Dual 7 W light | Amber |
| **C** | = 9 W light | Amber |
| **D** | = 13 W light | Amber |
| **E** | = Dual 13 W light | Amber |
| **F** | = No lighting | Amber |
| **G** | = 7 W light | Clear |
| **H** | = Dual 7 W light | Clear |
| **I** | = 9 W light | Clear |
| **J** | = 13 W light | Clear |
| **K** | = Dual 13 W light | Clear |
| **L** | = No lighting | Clear |
| **M** | = 7 W light | Special |
| **N** | = Dual 7 W light | Special |
| **O** | = 9 W light | Special |
| **P** | = 13 W light | Special |
| **Q** | = Dual 13 W light | Special |
| **R** | = No lighting | Special |
| **S** | = 350 MA LED | Amber |
| **T** | = 700 MA LED | Amber |
| **U** | = 350 MA LED | Clear |
| **V** | = 700 MA LED | Clear |
| **W** | = 350 MA LED | Special |
| **Y** | = 700 MA LED | Special |

**Metering Type**

| | |
|---|---|
| **U** | = Unmetered |
| **D** | = Digital electronic meters (side one) |
| **T** | = Digital electronic meters (side two) |
| **B** | = Digital electronic meters (both sides) |
| **R** | = Receptacles metered individually |
| **M** | = One meter socket (100 A) |
| **N** | = Two meter socket (100 A each) |

**Sides and Receptacles**

| R1S1 | R2S1 | R3S1 | R4S1 | R1S2 | R2S2 | R3S2 | R4S2 |
|---|---|---|---|---|---|---|---|
| 0 | 0 | 0 | 0 | 0 | 0 | 0 | 0 |
| 1 | 1 | 1 | 1 | 1 | 1 | 1 | 1 |
| 2 | 2 | 2 | 2 | 2 | 2 | 2 | 2 |
| 3 | 3 | 3 | 3 | 3 | 3 | 3 | 3 |
| 4 | 4 | 4 | 4 | 4 | 4 | 4 | 4 |
| 5 | 5 | 5 | 5 | 5 | 5 | 5 | 5 |
| 6 | 6 | 6 | 6 | 6 | 6 | 6 | 6 |
| 7 | 7 | 7 | 7 | 7 | 7 | 7 | 7 |
| 8 | 8 | 8 | 8 | 8 | 8 | 8 | 8 |

| | |
|---|---|
| **0** | = None |
| **1** | = 20 A GFI duplex |
| **2** | = 30 A, 125 V |
| **4** | = 50 A, 125/250 V |
| **5** | = 100 A, 208 V |
| **6** | = 100 A, 250 V |
| **7** | = 100 A, 277/480 V |
| **8** | = 100 A, 480 V |

**Water Option** ①

| | |
|---|---|
| **0** | = 0 |
| **1** | = 1 |
| **2** | = 2 |
| **3** | = Single water meter |
| **4** | = Dual water meter |
| **5** | = Single meter, 2 V |
| **6** | = 1 frost free |
| **7** | = 2 frost free |

**Extra Unmetered GFI Receptacles**

| | |
|---|---|
| **0** | = None |
| **1** | = 1 |
| **2** | = 2 |

**Phone Cable TV and Internet Options**

| | Phone Jack | Cable TV Jack | Internet Option |
|---|---|---|---|
| **A** = | 1 | 0 | 0 |
| **B** = | 1 | 0 | 1 |
| **C** = | 1 | 0 | 2 |
| **D** = | 1 | 1 | 0 |
| **E** = | 1 | 1 | 1 |
| **F** = | 1 | 1 | 2 |
| **G** = | 1 | 2 | 0 |
| **H** = | 1 | 2 | 1 |
| **I** = | 1 | 2 | 2 |
| **J** = | 2 | 0 | 0 |
| **K** = | 2 | 0 | 1 |
| **L** = | 2 | 0 | 2 |
| **M** = | 2 | 1 | 0 |
| **N** = | 2 | 1 | 1 |
| **O** = | 2 | 1 | 2 |
| **P** = | 2 | 2 | 0 |
| **Q** = | 2 | 2 | 1 |
| **R** = | 2 | 2 | 2 |
| **S** = | 0 | 2 | 2 |
| **T** = | 0 | 0 | 1 |
| **U** = | 0 | 0 | 2 |
| **V** = | 0 | 1 | 0 |
| **W** = | 0 | 1 | 1 |
| **X** = | 0 | 1 | 2 |
| **Y** = | 0 | 2 | 0 |
| **Z** = | 0 | 2 | 1 |
| **0** = | 0 | 0 | 0 |

**Bus**

| | |
|---|---|
| **S** | = Single-phase 3/8-inch copper busbar |
| **F** | = Three-phase 3/8-inch copper busbar |
| **C** | = Single-phase 3/8-inch Canadian busbar |
| **T** | = Three-phase 3/8-inch Canadian busbar |
| **M** | = Single-phase 300 kcmil mechanical lug bus |
| **Z** | = Three-phase 300 kcmil mechanical lug bus |
| **L** | = Single-phase 350 kcmil mechanical lug bus |
| **P** | = Three-phase 350 kcmil mechanical lug bus |
| **N** | = Single-phase 1/4-inch copper busbar |
| **Q** | = Single-phase 1/4-inch split mechanical busbar |
| **A** | = Single-phase 300 kcmil mechanical lug Canadian bus |
| **B** | = Three-phase 300 kcmil mechanical lug Canadian bus |
| **D** | = Single-phase 350 kcmil mechanical lug Canadian bus |
| **E** | = Three-phase 350 kcmil mechanical lug Canadian bus |

Receptacle: R1S1 = Receptacle 1, Side 1
R2S1 = Receptacle 2, Side 1
R3S1 = Receptacle 3, Side 1
R1S2 = Receptacle 1, Side 2
R2S2 = Receptacle 2, Side 2
R3S2 = Receptacle 3, Side 2

***Notes***

① Number represents the quantity of 1/4-turn ball valves with 3/4-inch hose bibs.

Internet option also available. Contact factory for details.

**Accessories**

See **Page V1-T5-75**.

**Dimensions**

Approximate Dimensions in Inches (mm)

### Powerhouse—Stainless Steel (SS)

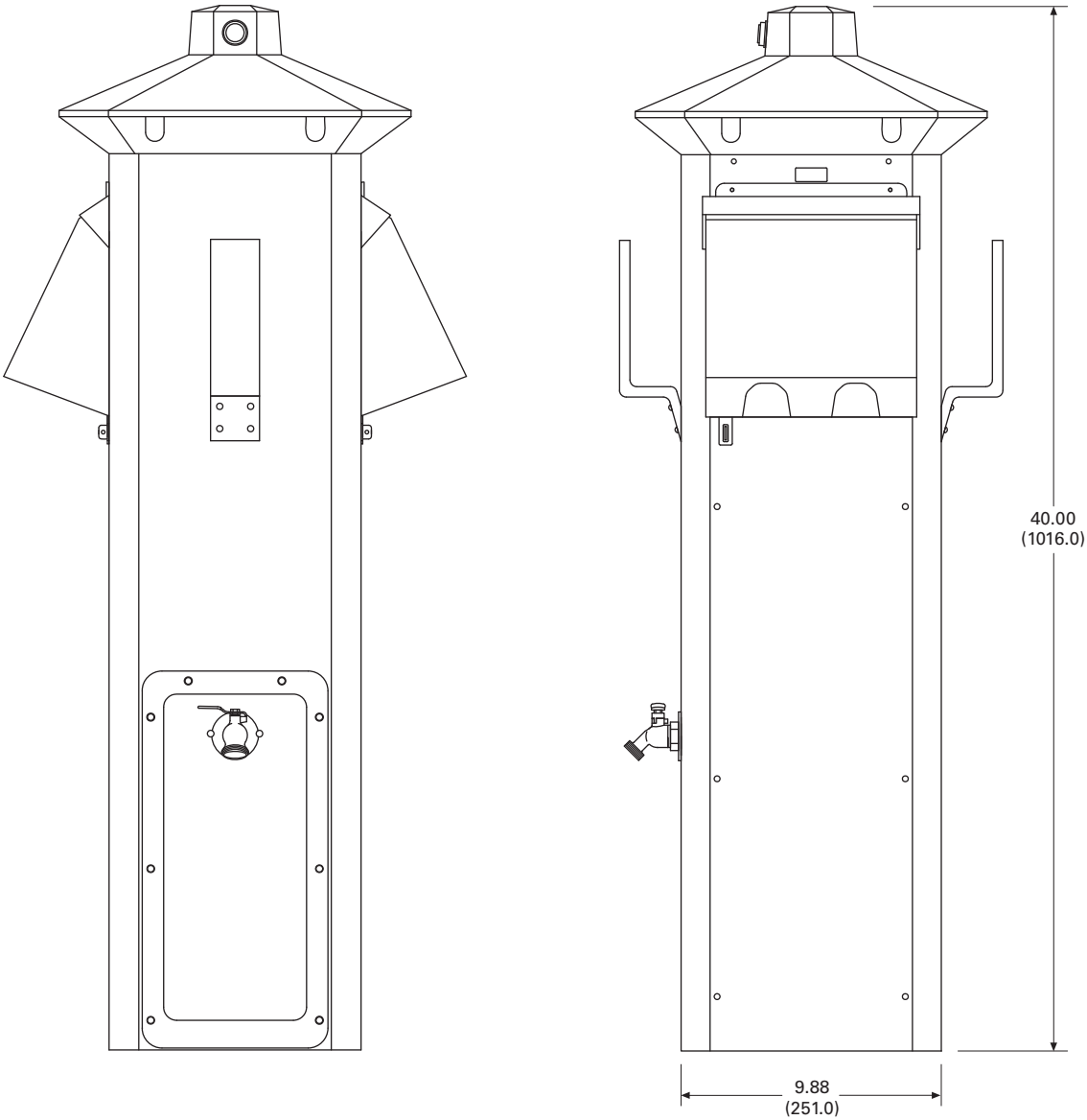

**Newport Camp Mate Power Pedestal**

## Contents


| *Description* | *Page* |
|---|---|
| Power Pedestals | **V1-T5-28** |
| Powerhouse Power Pedestal | **V1-T5-30** |
| Powerhouse—Stainless Steel (SS) Power Pedestal | **V1-T5-33** |
| Newport Camp Mate Power Pedestal | |
| Catalog Number Selection | **V1-T5-37** |
| Accessories | **V1-T5-38** |
| Dimensions | **V1-T5-38** |
| Park Light Power Pedestal | **V1-T5-39** |
| Firehouse | **V1-T5-42** |
| Digital Electronic Kilowatthour Meters | **V1-T5-44** |
| Distribution Equipment—Ground Fault Monitor | **V1-T5-45** |
| Distribution Equipment—Substations | **V1-T5-46** |
| Distribution Equipment—Panels | **V1-T5-49** |
| Distribution Equipment—Transformers | **V1-T5-50** |


## Newport Camp Mate Power Pedestal

### Product Description

The Newport Camp Mate provides many of the features and options of our other full-size pedestals, but in a compact self-contained unit. This model provides more mounting options to RV park owners than any other model. It can be mounted to our stainless steel stand either flanged or direct burial, a post or any wall.

It comes standard with a resin housing that will never rust or deteriorate and provides area lighting as well as aiding in hooking up at night. This unit is especially suitable to many RV park renovation projects as well as new RV parks.

### Features

- Photocell controlled 7 watt fluorescent light with amber lens
- Lockable weatherproof door that protects receptacles and breakers
- Engineered resin housing
- Limited lifetime warranty on the housing
- Designed to mount on a post, wall or an optional custom stand
- Loop-feed 1/4-inch copper stud lug busbars that can accept 2/0 AWG wire for Camp Mate without optional stand
- Loop-feed mechanical busbars that can accept up to 2/0 AWG wire for Camp Mate on optional stand

### Available Options

- 36-inch stainless steel stand
- 40-inch stainless steel pad-mounted stand
- 60-inch direct burial stainless steel stand
- Telephone (RJ-11)
- Cable TV
- High-speed Internet connector (RJ-45)
- Water—single or dual 1/4-turn brass ball valves (brass "T" connection) with 3/4-inch hose bibs mounted on optional stand
- Water—anti-siphon backflow preventer
- Loop feed 3/8-inch stud lug copper busbar for up to 350 kcmil wire with stand (recommended for salt water environments)
- Single-feed mechanical busbars for up to 350 kcmil wire available with stand
- Digital electronic meter
- Wireless remote reading of electronic kilowatt meter
- Meter socket available with aluminum stands (to accept glass style meter)

### Standards and Certifications

The Newport Camp Mate is UL listed and comes with a limited lifetime warranty on the housing.

Listed

## Catalog Number Selection

**C A Y B U 4 3 0 1 1 2 W M**

**Type**

| | |
|---|---|
| **N** | = NP Harbor Mate |
| **C** | = NP Camp Mate |

**Photocell**

| | |
|---|---|
| **Y** | = Yes |
| **N** | = No |

**Lighting and Lens Color**

| | | | |
|---|---|---|---|
| **A** | = | 7 W light | Amber |
| **C** | = | 9 W light | Amber |
| **F** | = | No lighting | Amber |
| **G** | = | 7 W light | Clear |
| **I** | = | 9 W light | Clear |
| **L** | = | No lighting | Clear |
| **M** | = | 7 W light | Special |
| **O** | = | 9 W light | Special |
| **R** | = | No lighting | Special |
| **S** | = | 350 MA LED | Amber |
| **T** | = | 700 MA LED | Amber |
| **U** | = | 350 MA LED | Clear |
| **V** | = | 700 MA LED | Clear |
| **W** | = | 350 MA LED | Special |
| **Y** | = | 700 MA LED | Special |

**Lighting Protection**

| | |
|---|---|
| **B** | = Breaker protected |
| **F** | = Fuse protected |

**Metering Type** ①

| | |
|---|---|
| **U** | = Unmetered |
| **D** | = Digital electronic meters |
| **R** | = Receptacles metered individually |

**Sides and Receptacles**

| R1S1 | R2S1 | R3S1 |
|---|---|---|
| **0** | **0** | **0** |
| **1** | **1** | **1** |
| **2** | **2** | |
| **3** | **3** | |
| **4** | **4** | |

| | |
|---|---|
| **0** | = None |
| **1** | = 20 A GFI duplex |
| **2** | = 30 A, 125 V |
| **3** | = 50 A, 125 V |
| **4** | = 50 A, 125/250 V |

**Stand**

| | |
|---|---|
| **0** | = 0 |
| **1** | = 1 |

**Water Option** ②

| | |
|---|---|
| **0** | = 0 |
| **1** | = 1 |
| **2** | = 2 |

**Hard Wired Breakers**

**S1**

| | |
|---|---|
| **0** | = None |
| **2** | = 20 A, two-pole |
| **3** | = 30 A |

**Bus**

| | |
|---|---|
| **S** | = Single-phase 1/4-inch copper busbar |
| **F** | = Three-phase 1/4-inch copper busbar |
| **C** | = Single-phase 1/4-inch Canadian busbar |
| **M** | = Mechanical lug 2/0 |
| **Q** | = Single-phase 1/4-inch split mechanical busbar (with stand ONLY) |
| **A** | = 1/4-inch Canadian mechanical |

**Phone Cable TV and Internet Options**

| | Phone Jack | Cable TV Jack | Internet Option |
|---|---|---|---|
| **A** = | 1 | 0 | 0 |
| **B** = | 1 | 0 | 1 |
| **C** = | 1 | 0 | 2 |
| **D** = | 1 | 1 | 0 |
| **E** = | 1 | 1 | 1 (Camp Mate only) |
| **T** = | 0 | 0 | 1 |
| **V** = | 0 | 1 | 0 |
| **W** = | 0 | 1 | 1 |
| **0** = | 0 | 0 | 0 |

Receptacle: R1 = Receptacle 1
R2 = Receptacle 2
R3 = Receptacle 3

***Notes***

① 20 A GFIs not metered.

② Number represents the quantity of 1/4-turn ball valves with 3/4-inch hose bibs (with stand only).

**Accessories**

See **Page V1-T5-75**.

**Dimensions**

Approximate Dimensions in Inches (mm)

### Newport Camp Mate

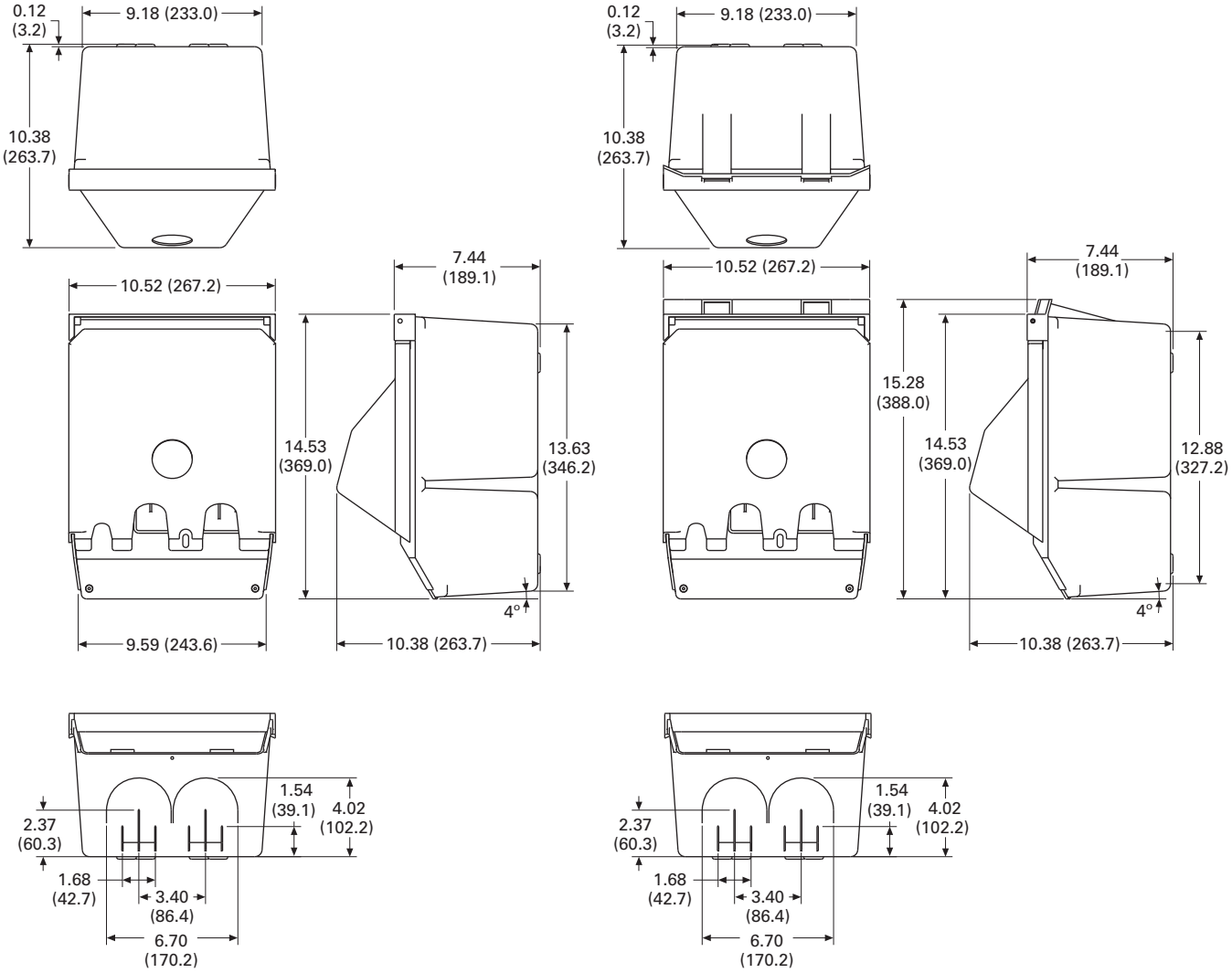


**Newport Redesign**

**Newport Redesign With Meters**

Park Light Power Pedestal

## Contents


| *Description* | *Page* |
|---|---|
| Power Pedestals | **V1-T5-28** |
| Powerhouse Power Pedestal | **V1-T5-30** |
| Powerhouse—Stainless Steel (SS) Power Pedestal | **V1-T5-33** |
| Newport Camp Mate Power Pedestal | **V1-T5-36** |
| Park Light Power Pedestal | |
| Catalog Number Selection | **V1-T5-40** |
| Accessories | **V1-T5-41** |
| Dimensions | **V1-T5-41** |
| Firehouse | **V1-T5-42** |
| Digital Electronic Kilowatthour Meters | **V1-T5-44** |
| Distribution Equipment—Ground Fault Monitor | **V1-T5-45** |
| Distribution Equipment—Substations | **V1-T5-46** |
| Distribution Equipment—Panels | **V1-T5-49** |
| Distribution Equipment—Transformers | **V1-T5-50** |




## Park Light Power Pedestal

### Product Description

The elegant design of the Park Light complements park landscaping and provides essential lighting required for park safety and security for campground paths, walkways, recreational areas and even pools. The Park Light has the same 360 degree lighting design as the Powerhouse and a resin housing that will never rust or deteriorate.

At 10¢/kWH, it will provide area lighting at a cost of less than 50¢/month and the bulbs will last for about three years. The Park Light is a perfect lighting fixture for any campground and especially for RV parks with Powerhouse utility centers.

### Features

- Photocell controlled dual 13 watt fluorescent light with amber lens
- Engineered resin housing with a two-part polyurethane coating for a UV-resistant, long-lasting finish
- Limited lifetime warranty on the housing
- Loop-feed 1/4-inch stud lug copper busbars that can accept 2/0 AWG wire

### Available Options

- Clear lens
- Photocell controlled single or dual 7 watt or 13 watt fluorescent light
- Phone (RJ-11)
- Cable TV
- High-speed Internet (RJ-45)
- Water faucet(s) with 3/4-inch hose bib
- Water—anti-siphon backflow preventer
- Digital electronic meter
- Wireless remote reading of electronic kilowatt meter
- Direct burial ground mounting stand
- Custom paint color

### Standards and Certifications

The housing has a limited lifetime warranty, and the unit is UL listed.

Listed

## Catalog Number Selection

**H D Y B D 4 7 0 1 2 A M**

**Type**

| | |
|---|---|
| **H** | = Hatteras Light |
| **R** | = Park Light |

**Photocell**

| | |
|---|---|
| **Y** | = Yes |
| **N** | = No |

**Lighting Protection**

| | |
|---|---|
| **B** | = Breaker protected |
| **F** | = Fuse protected |

**Metering Type** ①

| | |
|---|---|
| **U** | = Unmetered |
| **D** | = Digital electronic meters |
| **R** | = Receptacles metered individually |

**Lighting and Lens Color**

| | | |
|---|---|---|
| **A** | = 7 W light | Amber |
| **B** | = Dual 7 W light | Amber |
| **C** | = 9 W light | Amber |
| **D** | = 13 W light | Amber |
| **E** | = Dual 13 W light | Amber |
| **F** | = No lighting | Amber |
| **G** | = 7 W light | Clear |
| **H** | = Dual 7 W light | Clear |
| **I** | = 9 W light | Clear |
| **J** | = 13 W light | Clear |
| **K** | = Dual 13 W light | Clear |
| **L** | = No lighting | Clear |
| **M** | = 7 W light | Special |
| **N** | = Dual 7 W light | Special |
| **O** | = 9 W light | Special |
| **P** | = 13 W light | Special |
| **Q** | = Dual 13 W light | Special |
| **R** | = No lighting | Special |
| **S** | = 350 MA LED | Amber |
| **T** | = 700 MA LED | Amber |
| **U** | = 350 MA LED | Clear |
| **V** | = 700 MA LED | Clear |
| **W** | = 350 MA LED | Special |
| **Y** | = 700 MA LED | Special |

**Sides and Receptacles**

| R1S1 | R2S1 | R1S2 |
|---|---|---|
| **0** | **0** | **0** |
| **1** | **1** | **1** |
| **2** | **2** | **2** |
| **3** | **3** | **3** |
| **4** | **4** | **4** |

| | |
|---|---|
| **0** | = None |
| **1** | = 20 A GFI duplex |
| **2** | = 30 A, 125 V |
| **3** | = 50 A, 125 V |
| **4** | = 50 A, 125/250 V |

**Water Option** ②

| | |
|---|---|
| **0** | = 0 |
| **1** | = 1 (1/2-inch) |
| **2** | = 2 (1/2-inch) |
| **3** | = 1 (3/4-inch) |
| **4** | = 2 (3/4-inch) |

**Hard Wired Breakers**

**S1**

| | |
|---|---|
| **0** | = None |
| **2** | = 20 A, two-pole |
| **3** | = 30 A |

**Bus**

| | |
|---|---|
| **S** | = Single-phase 1/4-inch copper busbar |
| **F** | = Three-phase 1/4-inch copper busbar |
| **C** | = Single-phase 1/4-inch Canadian busbar |
| **M** | = Mechanical lug 2/0 |
| **A** | = 1/4-inch Canadian mechanical |

**Phone Cable TV and Internet Options**

| Phone Jack | Cable TV Jack | Internet Option |
|---|---|---|
| **A** = 1 | 0 | 0 |
| **B** = 1 | 0 | 1 |
| **C** = 1 | 0 | 2 |
| **D** = 1 | 1 | 0 |
| **E** = 1 | 1 | 1 |
| **F** = 1 | 1 | 2 |
| **G** = 1 | 2 | 0 |
| **H** = 1 | 2 | 1 |
| **I** = 1 | 2 | 2 |
| **J** = 2 | 0 | 0 |
| **M** = 2 | 1 | 0 |
| **P** = 2 | 2 | 0 |
| **S** = 0 | 2 | 2 |
| **T** = 0 | 0 | 1 |
| **U** = 0 | 0 | 2 |
| **V** = 0 | 1 | 0 |
| **W** = 0 | 1 | 1 |
| **X** = 0 | 1 | 2 |
| **Y** = 0 | 2 | 0 |
| **Z** = 0 | 2 | 1 |

Receptacle: R1 = Receptacle 1, Side 1
R2 = Receptacle 2, Side 2

***Notes***

① 20 A GFIs not metered.

② Number represents the quantity of 1/4-turn ball valves with 3/4-inch hose bibs (with stand only).

**Accessories**

See **Page V1-T5-75**.

**Dimensions**

Approximate Dimensions in Inches (mm)

### Park Light

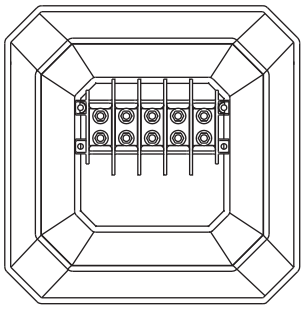

**Busbar Access Top Removed**

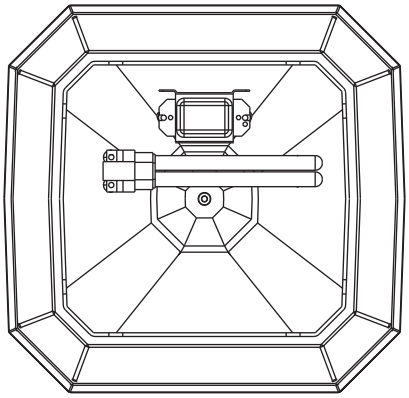

**Inside Top**

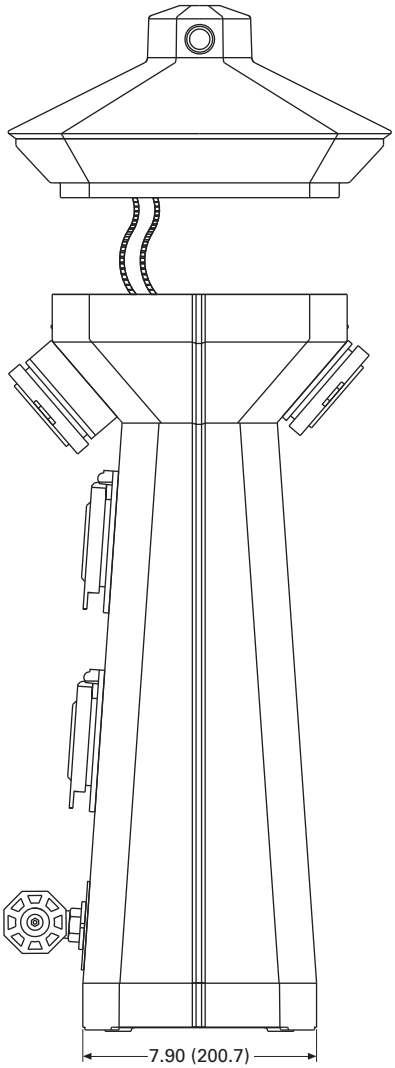


**Side View**

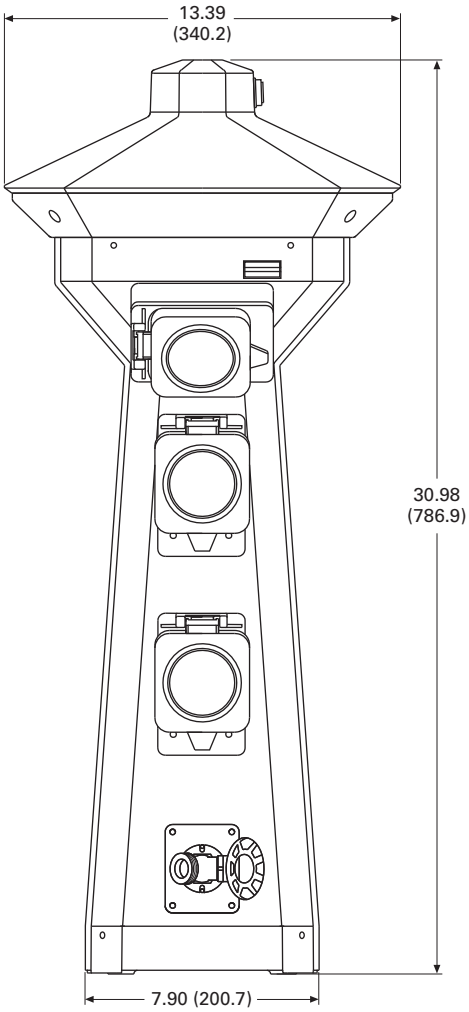


**Front View**

Firehouse

## Contents


| *Description* | *Page* |
|---|---|
| Power Pedestals | **V1-T5-28** |
| Powerhouse Power Pedestal | **V1-T5-30** |
| Powerhouse—Stainless Steel (SS) Power Pedestal | **V1-T5-33** |
| Newport Camp Mate Power Pedestal | **V1-T5-36** |
| Park Light Power Pedestal | **V1-T5-39** |
| Firehouse | |
| Accessories | **V1-T5-43** |
| Dimensions | **V1-T5-43** |
| Digital Electronic Kilowatthour Meters | **V1-T5-44** |
| Distribution Equipment—Ground Fault Monitor | **V1-T5-45** |
| Distribution Equipment—Substations | **V1-T5-46** |
| Distribution Equipment—Panels | **V1-T5-49** |
| Distribution Equipment—Transformers | **V1-T5-50** |




## Firehouse

### Product Description

The Firehouse is designed to provide added fire safety to RV parks and campgrounds. The Firehouse provides a convenient location and easy access to fire extinguishers and to an optional life ring when installed around pools and waterfront amenities.

In addition, the Firehouse provides area lighting for easy identification during an emergency and for security lighting around the unit. The Firehouse can be equipped with an alarm strobe light and siren, which are automatically activated when the fire extinguisher cabinet door is opened or the optional life ring is removed.

### Features

- Photocell controlled 13 watt fluorescent light
- Amber lens for bug reduction
- 10 lb ABC Type fire extinguisher
- Stainless steel housing with oven-baked enamel finish with an engineered resin base and top
- Limited lifetime warranty on the housing

### Available Options

- Alarm strobe light and siren
- Optional 24-inch white or orange life ring for poolside or dockside installations
- 20 lb ABC Type fire extinguisher

### Catalog Number Selection

**F A Y A E N**

**Type**
**F** = Firehouse

**Photocell**
**Y** = Yes
**N** = No

**Alarm/Strobe**
**A** = Include alarm/strobe
**N** = No alarm/strobe

**Fire Extinguisher**
**E** = Include 10 lb extinguisher
**N** = No extinguisher
**X** = Include 20 lb extinguisher

**24-Inch Life Ring**
**R** = Include life ring
**N** = No life ring

**Lighting and Lens Color**

| | | | | | |
|---|---|---|---|---|---|
| **A** = 7 W light | Amber | **I** = 9 W light | Clear | **Q** = Dual 13 W light | Special |
| **B** = Dual 7 W light | Amber | **J** = 13 W light | Clear | **R** = No lighting | Special |
| **C** = 9 W light | Amber | **K** = Dual 13 W light | Clear | **S** = 350 MA LED | Amber |
| **D** = 13 W light | Amber | **L** = No lighting | Clear | **T** = 700 MA LED | Amber |
| **E** = Dual 13 W light | Amber | **M** = 7 W light | Special | **U** = 350 MA LED | Clear |
| **F** = No lighting | Amber | **N** = Dual 7 W light | Special | **V** = 700 MA LED | Clear |
| **G** = 7 W light | Clear | **O** = 9 W light | Special | **W** = 350 MA LED | Special |
| **H** = Dual 7 W light | Clear | **P** = 13 W light | Special | **Y** = 700 MA LED | Special |

**Accessories**

See **Page V1-T5-75**.

**Dimensions**

Approximate Dimensions in Inches (mm)

**Firehouse–SS**

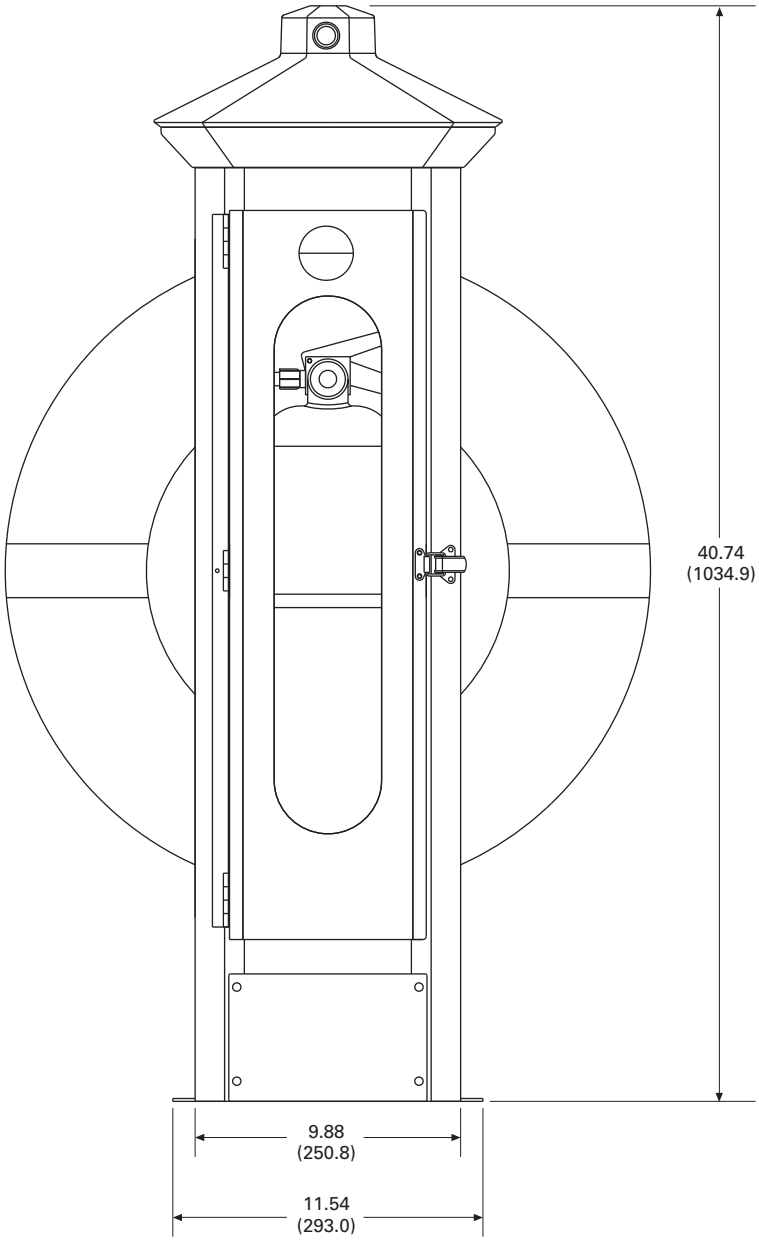

Digital Electronic Kilowatthour Meters

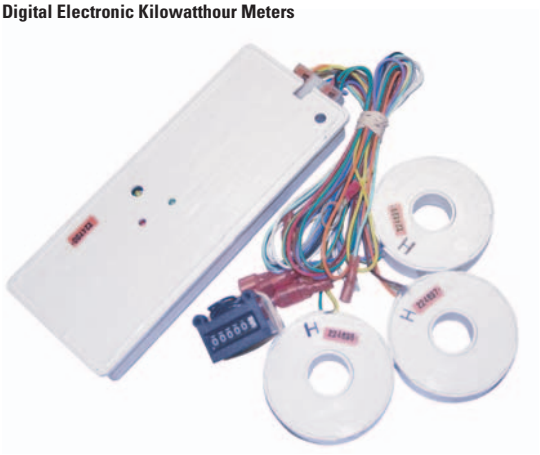

## Contents


| *Description* | *Page* |
|---|---|
| Power Pedestals | **V1-T5-28** |
| Powerhouse Power Pedestal | **V1-T5-30** |
| Powerhouse—Stainless Steel (SS) Power Pedestal | **V1-T5-33** |
| Newport Camp Mate Power Pedestal | **V1-T5-36** |
| Park Light Power Pedestal | **V1-T5-39** |
| Firehouse | **V1-T5-42** |
| Digital Electronic Kilowatthour Meters | |
| Distribution Equipment—Ground Fault Monitor | **V1-T5-45** |
| Distribution Equipment—Substations | **V1-T5-46** |
| Distribution Equipment—Panels | **V1-T5-49** |
| Distribution Equipment—Transformers | **V1-T5-50** |


## Digital Electronic Kilowatthour Meters

### Product Description

Using the latest surface mount technology, Eaton manufactures a digital electronic kilowatt hour meter that exceeds the +/– 2% accuracy required by ANSI (American National Standards Institute) C-12.1 and is approved by the state of California at +/– 1% over the full range of 0–100 A from a 0.5 to 1 power factor and is available for both single- and three-phase applications.

The meter drives an electro-mechanical counter that requires a 12 V pulse each tenth of a kilowatthour, providing 10 pulses per kilowatt used. The meter output can be hard wired or connected to a transmitter in the pedestal for wireless transmission to a receiver displaying the output on a PC for direct billing of up to 1,000 individual customers.

### Features

Our meter is designed to be user friendly in that all connections from external sources and the meter output are through one 14-pin locking connector. This feature eliminates many common problems, such as reverse line polarity and improper coil polarity. Simple LEDs, both red and green, indicate line and load condition and the pulsed LED indicates the rate of power consumption.

#### *Wireless System*

All of our meters are "wireless capable" to allow for wireless meter reading. This technology enables the marina or RV park to get meter readings from one central location rather than visiting every site to read the counters.

#### *Meter Socket Capabilities*

Meter sockets are available on the Powerhouse and Powerhouse–SS.

#### *Standard:*

- Four jaw
- Ring-type
- 100 A

### Available Options

- 200 A (SS only)
- Lockable hasp
- Ringless (SS only)
- Five jaw
- Seven jaw (SS only)

### Product Selection

*One Element Meter*

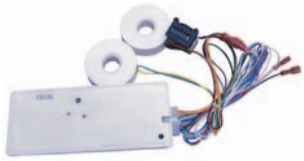

*Two Element Meter*

*Three Element Meter*

Ground Fault Monitor

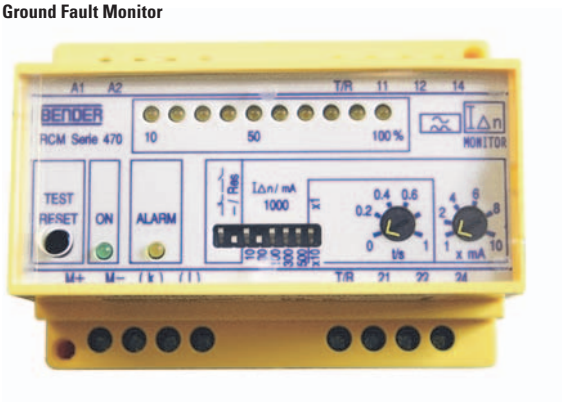


## Contents


| *Description* | *Page* |
|---|---|
| Power Pedestals | **V1-T5-28** |
| Powerhouse Power Pedestal | **V1-T5-30** |
| Powerhouse—Stainless Steel (SS) Power Pedestal | **V1-T5-33** |
| Newport Camp Mate Power Pedestal | **V1-T5-36** |
| Park Light Power Pedestal | **V1-T5-39** |
| Firehouse | **V1-T5-42** |
| Digital Electronic Kilowatthour Meters | **V1-T5-44** |
| Distribution Equipment—Ground Fault Monitor | |
| Distribution Equipment—Substations | **V1-T5-46** |
| Distribution Equipment—Panels | **V1-T5-49** |
| Distribution Equipment—Transformers | **V1-T5-50** |




## Distribution Equipment—Ground Fault Monitor

### Product Description

New to our product offering are ground fault monitoring systems designed to detect fault currents in the AC shore power system that are too low to trip a circuit breaker. The Ground Fault Monitor helps reduce the risk of injury or property damage, which may result from stray fault currents. Our ground fault monitoring system provides information to the maintenance staff on the overall condition of the AC electrical system. The ground fault monitoring system operates 24 hours a day and can be monitored by non-technical personnel.

### Features

- UL listed current transformers
- Adjustable trip level 10 mA to 10 A
- Current transformers up to 8 1/4-inch diameter
- Visual and/or audible alarm
- Housing of fiberglass or powder coated stainless steel available

***Power Guard***

The ground fault monitor detects ground fault currents by means of current transformers (CT), which are placed around main or branch circuits. If a ground fault occurs, the CT will detect the amount of fault current and send a signal to the ground fault monitoring device where the amount of fault current is displayed with the faulty circuit identified. The detected fault can either activate an indicator alarm or disconnect the faulted circuit.

**Substations**

***Side-by-Side Substation***

## Contents


| *Description* | *Page* |
|---|---|
| Power Pedestals | **V1-T5-28** |
| Powerhouse Power Pedestal | **V1-T5-30** |
| Powerhouse—Stainless Steel (SS) Power Pedestal | **V1-T5-33** |
| Newport Camp Mate Power Pedestal | **V1-T5-36** |
| Park Light Power Pedestal | **V1-T5-39** |
| Firehouse | **V1-T5-42** |
| Digital Electronic Kilowatthour Meters | **V1-T5-44** |
| Distribution Equipment—Ground Fault Monitor | **V1-T5-45** |
| Distribution Equipment—Substations | |
| Features, Benefits and Functions | **V1-T5-47** |
| Available Options | **V1-T5-48** |
| Standards and Certifications | **V1-T5-48** |
| Dimensions | **V1-T5-48** |
| Distribution Equipment—Panels | **V1-T5-49** |
| Distribution Equipment—Transformers | **V1-T5-50** |


## Distribution Equipment—Substations

### Product Description

The introduction of substations into the marina and recreational vehicle market allows Eaton to be your complete marina and RV park electrical products supplier. We are able to assist in the design and layout of your marina or RV park electrical system from the primary service provider to your power pedestal. Our substations are designed for any coastal or inland environment and are constructed of powder-coated stainless steel NEMA 3R housing cabinets. All substation cabinets come with our limited lifetime warranty. All of our substations use Eaton's panels and circuit breakers, providing our customers the utmost in circuit protection and quality.

### Application Description

The aluminum and Galvaneal cabinets are recommended for inland applications. The substations can be configured with 50 to 330 kVA single-phase or three-phase copper wound transformers and up to 20 single-phase or 12 three-phase branch breakers. An optional three-sided double-wall cabinet is available that provides air flow between the panels. All substations come standard with temperature-controlled cooling fans.

### Product Selection Guide

#### Panel and Transformer Combinations

| Panel | Transformer |
|---|---|
| **Single-Phase** | |
| 200 A | 50 kVA |
| 300 A | 75 kVA |
| 400 A | 100 kVA |
| 600 A | 150 kVA |
| 700 A | 167.5 kVA |
| 800 A | 200 kVA |
| 1000 A | 250 kVA |
| 1200 A | 330 kVA |
| **Three-Phase** | |
| 100 A | 45 kVA |
| 200 A | 75 kVA |
| 300 A | 112.5 kVA |
| 400 A | 150 kVA |
| 600 A | 225 kVA |
| 800 A | 300 kVA |

## Features, Benefits and Functions

- Limited lifetime warranty on the housing
- All stainless steel hardware
- Temperature controlled cooling fans in the transformer and circuit breaker compartments
- Lockable door

### *Ventilation*

The substation ventilation is designed to optimize air circulation over and around the transformers and through the panel compartment so that the substation operates at lower temperatures.

Substations come equipped with temperature-controlled cooling fans for exhausting hot air from the cabinet and solar shield.

In addition, substations are available with a double-walled cabinet and solar shield, which allow for cooling of both the exterior surface of the cabinet and the internal components.

## Substations

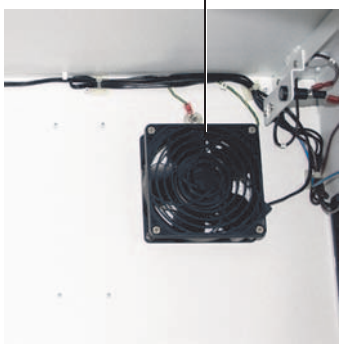


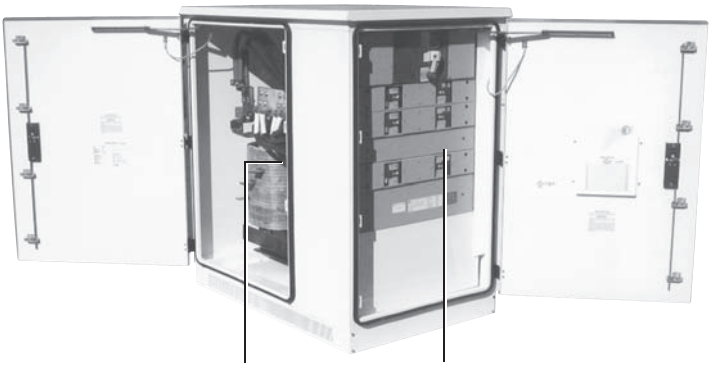


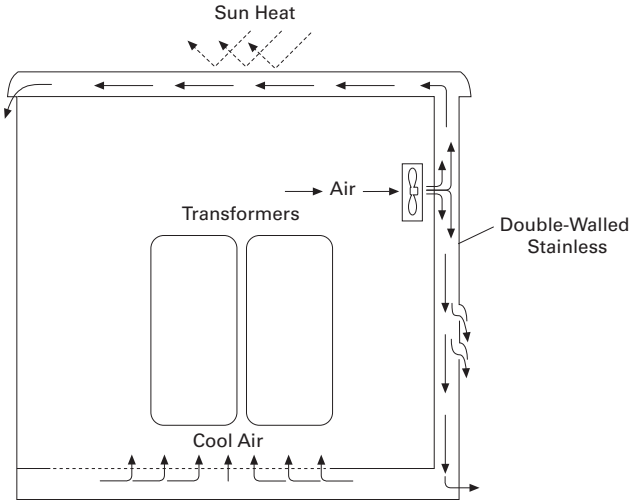


Double-Walled Construction

## Available Options

- Powder-coated cabinets made of stainless steel or fiberglass
- Limited lifetime warranty on housing. Transformer and secondary distribution panel in a single enclosure have a one-year limited warranty
- Stainless steel housing and hardware with locking doors
- Single-phase and three-phase models
- Overload capacity meets ANSI L57.96–01.250
- Optional double-walled construction
- Temperature-controlled fans for cooling
- Custom-made copper wound single-phase or three-phase transformers from 50 to 330 kVA
- Up to 1200 A main circuit breaker with 15 single-phase branch circuit breakers or 10 three-phase branch circuit breakers
- Substations can be equipped with photocells to turn on and off lights
- A 20 A GFI can be installed in the cabinet, as well as a ground fault monitoring system

## Standards and Certifications

- cULus listed

c UL us
Listed

## Dimensions

Approximate Dimensions in Inches (mm)

**Substations**

| | |
|---|---|
| **Standard Substation** | |
| Height | 53.00 (1346.2) |
| Width | 51.00 (1295.4) |
| Depth | 33.00 (838.2) |
| **Side-by-Side Substation** | |
| Height | 53.00 (1346.2) |
| Width | 66.00 (1676.4) |
| Depth | 30.00 (762.0) |
| **Double Panel Substation** | |
| Height | 53.00 (1346.2) |
| Width | 63.00 (1600.2) |
| Depth | 33.00 (838.2) |

Panels

## Contents


| *Description* | *Page* |
|---|---|
| Power Pedestals | **V1-T5-28** |
| Powerhouse Power Pedestal | **V1-T5-30** |
| Powerhouse—Stainless Steel (SS) Power Pedestal | **V1-T5-33** |
| Newport Camp Mate Power Pedestal | **V1-T5-36** |
| Park Light Power Pedestal | **V1-T5-39** |
| Firehouse | **V1-T5-42** |
| Digital Electronic Kilowatthour Meters | **V1-T5-44** |
| Distribution Equipment—Ground Fault Monitor | **V1-T5-45** |
| Distribution Equipment—Substations | **V1-T5-46** |
| Distribution Equipment—Panels | |
| Distribution Equipment—Transformers | **V1-T5-50** |




## Distribution Equipment—Panels

### Product Description

We now can offer our customers Eaton's PRL-3A and PRL-4 panels as stand-alone units or in one of our substations. All of our busses are made of copper and are load rated, breakers are bolt-on type. Distribution panels can be single-phase or three-phase based on your system requirements. Distribution panels can also have a main breaker or a main lug. Branch circuit breakers are provided based on customer requirements.

### Features

- All internal wiring is fine stranded 2000 V insulated copper
- Copper busbars
- All exterior hardware is stainless steel

### Available Options

- NEMA 3R or 4X
- Powder-coated stainless steel
- Main breaker up to 1200 A
- Branch breaker 20 to 1200 A
- Main lug only
- We also offer 480 V models—single-phase and three-phase

***Single-Phase***

- Up to 1200 A main circuit breakers
- Up to 42 branch circuit breakers

***Three-Phase***

- Up to 1200 A main circuit breakers
- Up to 42 branch circuit breakers

### Standards and Certifications

- UL listed
- cULus listed

Listed

Transformers

## Contents


| *Description* | *Page* |
|---|---|
| Power Pedestals | **V1-T5-28** |
| Product Selection Guide | **V1-T5-29** |
| Powerhouse Power Pedestal | **V1-T5-30** |
| Powerhouse—Stainless Steel (SS) Power Pedestal | **V1-T5-33** |
| Newport Camp Mate Power Pedestal | **V1-T5-36** |
| Park Light Power Pedestal | **V1-T5-39** |
| Firehouse | **V1-T5-42** |
| Digital Electronic Kilowatthour Meters | **V1-T5-44** |
| Distribution Equipment—Ground Fault Monitor | **V1-T5-45** |
| Distribution Equipment—Substations | **V1-T5-46** |
| Distribution Equipment—Panels | **V1-T5-49** |
| Distribution Equipment—Transformers | |


## Distribution Equipment—Transformers

### Product Description

Because of the high humidity and corrosive conditions of coastal environments, our transformers are wound with Class H heavily insulated copper bar and are double dipped in tough insulating varnish that protects the copper, as well as reduces the hum that is typical in a transformer that is not double dipped. For marine applications, we provide a third overcoat of high temperature epoxy to protect against the severe saltwater environment. We can provide this transformer in single-phase, from 50 to 500 kVA, and three-phase, from 45 to 300 kVA.

### Features

- Copper wound transformer coils double dipped in high temperature baking varnish
- Copper terminations
- Marine transformers with epoxy overcoat
- All copper-to-copper connections

### Available Options

- Single-phase: 50–500 kVA
- Three-phase: 45–300 kVA
- Epoxy overcoat for non-marine applications

***Primary Voltages***

- 480 wye three-phase
- 480 V three-phase delta three-wire + ground
- 480 V single-phase two-wire + ground

***Secondary Voltages***

- 127/220 V three-phase wye four-wire
- 120/208 V three-phase wye four-wire
- 120/240 V single-phase three-wire

***Marina Power Distribution Transformer kVA Availabilities***

- Single-phase: 50, 75, 100, 150, 167.5, 200, 250, 330, 500 kVA
- Three-phase: 45, 75, 112.5, 150, 225, 300 kVA

### Standards and Certifications

- cULus listed

c UL us Listed

**Marina Power and Lighting Equipment**

***High-Quality, Weatherproof Electrical Equipment***

## Contents


| *Description* | *Page* |
|---|---|
| Power Pedestals | |
| Product Selection Guide | **V1-T5-52** |
| Lighthouse | **V1-T5-54** |
| Lighthouse–SS | **V1-T5-58** |
| Admiral–SS | **V1-T5-62** |
| Newport Harbor Mate | **V1-T5-65** |
| Hatteras Light | **V1-T5-69** |
| Firehouse | **V1-T5-73** |
| Smart Start | **V1-T5-79** |
| Mariner | **V1-T5-80** |
| Digital Electronic Kilowatthour Meters | **V1-T5-81** |
| Distribution Equipment—Ground Fault Monitor | **V1-T5-82** |
| Distribution Equipment—Mega Yacht Powerpoint | **V1-T5-83** |
| Distribution Equipment—Substations | **V1-T5-86** |
| Distribution Equipment—Panels | **V1-T5-89** |
| Distribution Equipment—Transformers | **V1-T5-90** |


Learn Online



## Power Pedestals

### Product Overview

Known as a leader in electrical control, power distribution, and industrial automation products and services, Eaton is a quality driven company that constantly looks for ways to provide enhanced product and service solutions for their customers. Eaton will be able to provide Marina developers a complete electrical solution. For more information on the other products available from Eaton, visit us online at www.eaton.com or www.marinapower.com.

***What Eaton has to Offer***

- Eaton has more marina power outlets in service than all other suppliers combined
- We offer complementary comprehensive in-house electrical designs for your complete marina development using all high quality Eaton products
- We can provide your marina development with complete remote wireless digital electronic meter reading
- Not only can Eaton provide your marina with the highest quality power pedestals and marine distribution equipment, we can also supply your entire electrical needs for your surrounding development and beyond from safety switches to loadcenters and much more

## Product Selection Guide

### Power Pedestal Quick Guide

| | Lighthouse | Lighthouse–SS | Hatteras Light | Newport Harbor Mate | Admiral–SS | Firehouse | Mariner | Lookout | Power Point |
|---|---|---|---|---|---|---|---|---|---|
| Main housing | Engineered resin | Stainless steel | Engineered resin | Engineered resin | Stainless steel | Stainless steel | Engineered resin | Stainless steel | Stainless steel |
| Top | Engineered resin | Engineered resin | Engineered resin | Engineered resin | Stainless steel | Engineered resin | Engineered resin | Stainless steel | Stainless steel |
| Optional stand | — | — | — | Stainless steel | — | — | PVC | — | — |
| External hardware | Stainless steel | Stainless steel | Stainless steel | Stainless steel | Stainless steel | Stainless steel | Stainless steel | Stainless steel | Stainless steel |
| Standard lightwattage(s) | 13 W | 13 W | 13 W | 7 W | 13 W | 13 W | 5 W, 7 W & 13 W | — | 13 W |
| LED lighting option | Yes | Yes | Yes | No | Yes | Yes | No | No | Yes |
| Photocell | Yes | Yes | Yes | Yes | Yes | Yes | No | No | Yes |
| Lockable doors | Yes | Yes | Yes | Yes | Yes | — | — | — | Yes |
| Hose hangers | Yes | Yes | No | No | Yes | No | No | No | No |
| Electric meters | Yes—up to 4 | Yes—up to 4 | Yes—up to 2 | Yes—up to 2 | Yes—up to 4 | No | No | No | Yes—up to 6 |
| Remote meter reading | Yes | Yes | Yes | Yes | Yes | No | No | No | Yes |
| Water | Two 3/4″ | Two 3/4″ | Two 1/2″ | Two 3/4″ | Two 3/4″ | None | None | None | One 3/4″ or more |
| Water meters | Yes | Yes | No | Yes | Yes | No | No | No | Yes |
| Telephone | Yes | Yes | Yes | Yes | Yes | No | No | No | Yes |
| Cable TV | Yes | Yes | Yes | Yes | Yes | No | No | No | Yes |
| Internet | Yes | Yes | Yes | Yes | Yes | No | No | No | Yes |
| Fire extinguisher | No | No | No | No | No | Yes—up to 20 lbs | No | No | No |
| Life ring | No | No | No | No | No | Yes—24″ | No | No | No |
| Alarm and strobe light | No | No | No | No | No | Yes | No | No | No |
| 20 A 110 V GFI | Yes | Yes | Yes | Yes | Yes | No | No | No | Yes |
| 30 A 125 V twist—lock | Yes | Yes | Yes | Yes | Yes | No | No | No | Yes |
| 50 A 125/250 V twist—lock | Yes | Yes | Yes | Yes | Yes | No | No | No | Yes |
| 100 A 120/240 V pin and sleeve | Yes | Yes | No | No | Yes | No | No | No | Yes |
| 100 A 120/208 V pin and sleeve | Yes | Yes | No | No | Yes | No | No | No | Yes |
| 100 A 277/480 V pin and sleeve | Yes | Yes | No | No | Yes | No | No | No | Yes |
| 100 A 480 V pin and sleeve | Yes | Yes | No | No | Yes | No | No | No | Yes |
| 200 A 480 V pin and sleeve | No | No | No | No | Yes | No | No | No | Yes |
| Hardwire compatible | No | No | No | No | No | No | No | No | Yes |
| TVSS compatible | Yes | Yes | No | No | Yes | No | No | No | Yes |
| Card swipe compatible | Yes | Yes | No | Yes | Yes | No | No | No | Yes |
| Security camera compatible | No | No | No | No | No | No | No | Yes | No |
| Busbar rating | Up to 500 A | Up to 500 A | Up to 140 A | Up to 140 A | Up to 500 A | — | — | — | Up to 800 A |
| Maximum wire size—single feed | 350 kcmil | 350 kcmil | #2/0 | #2/0 | 350 kcmil | — | — | — | (3) 500 kcmil |
| Maximum wire size—loop feed | #4/0 | #4/0 | #1 | #1 | 350 kcmil | — | — | — | (3) 500 kcmil |
| Height | 44″ | 40″ | 30″ | 36″ | 48″ | 43.5″ | 24″ to 72″ | 72″ to 96″ | 50″ |
| Width | 13.75″ | 9.875″ | 7.5″ | 10.5″ | 14″ | 9.875″ | 7″ | 9″ | 50″ |
| Depth | 13.75″ | 9.875″ | 7.5″ | 14.5″ | 14″ | 9.875″ | 7″ | 9″ | 36″ |
| **Warranty** | | | | | | | | | |
| Housing | Limited lifetime | Limited lifetime | Limited lifetime | Limited lifetime | Limited lifetime | Limited lifetime | Limited lifetime | Limited lifetime | Limited lifetime |
| Receptacles and breakers | 2 years | 2 years | 2 years | 2 years | 2 years | — | — | — | 2 years |
| Lighting assembly | 1 year | 1 year | 1 year | 1 year | 1 year | 1 year | 1 year | — | 1 year |

## Receptacles

| Side One | | Side Two | |
|---|---|---|---|
| None | None | None | None |
| 30 A | None | None | None |
| 30 A | 30 A | None | None |
| 30 A | None | 30 A | None |
| 30 A | 30 A | 30 A | 30 A |
| 30 A | 50 A | None | None |
| 30 A | None | 50 A | None |
| 30 A | 50 A | 30 A | 50 A |
| 50 A | None | None | None |
| 50 A | 50 A | None | None |
| 50 A | None | 50 A | None |
| 50 A | 50 A | 50 A | 50 A |
| 100 A 120/240 V | None | None | None |
| 100 A 120/240 V | None | 50–50 A | None |
| 100 A 120/240 V | None | 100 A 120/240 V | None |
| 100 A 120/240 V | 50–50 A | 100 A 120/240 V | 50–50 A |
| 100 A 120/208 V | None | None | None |
| 100 A 120/208 V | None | 100 A 120/240 V | None |
| 100 A 120/240 V | 100 A 120/240 V | 100 A 120/240 V | 100 A 120/240 V |
| 100 A 120/208 V | 100 A 120/208 V | 100 A 120/208 V | 100 A 120/208 V |
| 100 A 120/240 V | 100 A 120/240 V | 100 A 120/208 V | 100 A 120/208 V |

## Receptacle Configuration Availability

| Lighthouse | Lighthouse–SS | Admiral–SS | Hatteras Light | Newport Harbor Mate |
|---|---|---|---|---|
| **Receptacle Available with GFI Receptacles** | | | | |
| Yes | Yes | Yes | Yes | Yes |
| Yes | Yes | Yes | Yes | Yes |
| Yes | Yes | Yes | No | Yes |
| Yes | Yes | Yes | Yes | No |
| Yes | Yes | Yes | No | No |
| Yes | Yes | Yes | No | Yes |
| Yes | Yes | Yes | Yes ① | No |
| Yes | Yes | Yes | No | No |
| Yes | Yes | Yes | Yes | Yes |
| Yes | Yes | Yes | No | Yes |
| Yes | Yes | Yes | No | No |
| Yes | Yes | Yes | No | No |
| Yes | Yes | Yes | No | No |
| Yes | Yes | Yes | No | No |
| Yes | Yes | Yes | No | No |
| No | No | Yes | No | No |
| Yes | Yes | Yes | No | No |
| Yes | Yes | Yes | No | No |
| No | No | Yes | No | No |
| No | No | Yes | No | No |
| No | No | Yes | No | No |

***Note***

① Configuration available with no additional GFI receptacles.

Lighthouse

## Contents


| *Description* | *Page* |
|---|---|
| Power Pedestals | **V1-T5-51** |
| Lighthouse | |
| Available Options | **V1-T5-55** |
| Catalog Number Selection | **V1-T5-56** |
| Accessories | **V1-T5-57** |
| Dimensions | **V1-T5-57** |
| Lighthouse–SS | **V1-T5-58** |
| Admiral–SS | **V1-T5-62** |
| Newport Harbor Mate | **V1-T5-65** |
| Hatteras Light | **V1-T5-69** |
| Firehouse | **V1-T5-73** |
| Smart Start | **V1-T5-79** |
| Mariner | **V1-T5-80** |
| Digital Electronic Kilowatthour Meters | **V1-T5-81** |
| Distribution Equipment—Ground Fault Monitor | **V1-T5-82** |
| Distribution Equipment—Mega Yacht Powerpoint | **V1-T5-83** |
| Distribution Equipment—Substations | **V1-T5-86** |
| Distribution Equipment—Panels | **V1-T5-89** |
| Distribution Equipment—Transformers | **V1-T5-90** |


## Lighthouse

### Product Description

One of our most popular units, the all-purpose Lighthouse® pedestal has a wide range of features. With units in service around the world, this stylish power pedestal is recognized for its practicality and exceptional durability.

Engineered to withstand the most severe weather conditions, Lighthouse power pedestals can be found in marinas from Alaska to the tropics.

**Note:** Custom paint color.

**Note:** Wireless remote reading of electronic kilowatt meters.

**Note:** Clear lens.

### Features, Benefits and Functions

- Photocell controlled 13 watt fluorescent light (clear lens or amber lens for bug reduction)
- Lockable weatherproof doors that protect breakers and receptacles while in use (a requirement of NFPA 303 and NEC Article 555)
- Hose and cable brackets
- Heavy resin housing with a two-part polyurethane coating for a UV-resistant, long-lasting finish
- Copper busbar with ratings from 250 to 500 A
- New "hingeless" base providing easy access for both installation and maintenance
- Backlit faceplate for easy receptacle plug-in at night

## Lighthouse

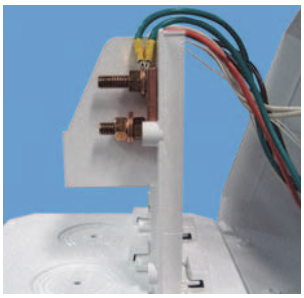

***Copper Busbar with Ratings from 250 to 500 A***

***Cable and Internet Connections***

***New Hingeless Base***

***Optional Meter Socket***

### Available Options

- Digital electronic metering (one, two or three element meters available)
- Built-in meter socket
- 20 A / 125 V GFI receptacle (max. of two GFI receptacles per pedestal)

**Note:** 20 A GFI receptacles are not to be used for shore power.

- High-speed Internet connections
- Wireless remote metering for electric and water
- Transient voltage surge suppressor (TVSS) to protect from voltage surges, spikes or lightning on the AC power line (extends warranty on internal parts to three years)
- Stainless steel door hinge on receptacle main doors
- Single or dual steel 1/4-turn ball valves with 3/4-inches
- Hose bibs and stainless steel handles
- Single or dual phone and/or cable TV connections
- Base cap
- Base extension
- LED lighting

## Catalog Number Selection

**L D U 4 7 0 0 0 0 0 0 1 2 K M**

**Type**

| | |
|---|---|
| **L** | = Lighthouse |
| **S** | = LHSS |

**Lighting and Lens Color**

| | | |
|---|---|---|
| **A** | = 7 W light | Amber |
| **B** | = Dual 7 W light | Amber |
| **C** | = 9 W light | Amber |
| **D** | = 13 W light | Amber |
| **E** | = Dual 13 W light | Amber |
| **F** | = No lighting | Amber |
| **G** | = 7 W light | Clear |
| **H** | = Dual 7 W light | Clear |
| **I** | = 9 W light | Clear |
| **J** | = 13 W light | Clear |
| **K** | = Dual 13 W light | Clear |
| **L** | = No lighting | Clear |
| **M** | = 7 W light | Special |
| **N** | = Dual 7 W light | Special |
| **O** | = 9 W light | Special |
| **P** | = 13 W light | Special |
| **Q** | = Dual 13 W light | Special |
| **R** | = No lighting | Special |
| **S** | = 350 MA LED | Amber |
| **T** | = 700 MA LED | Amber |
| **U** | = 350 MA LED | Clear |
| **V** | = 700 MA LED | Clear |
| **W** | = 350 MA LED | Special |
| **Y** | = 700 MA LED | Special |

**Metering Type**

| | |
|---|---|
| **U** | = Unmetered |
| **D** | = Digital electronic meters (side one) |
| **T** | = Digital electronic meters (side two) |
| **B** | = Digital electronic meters (both sides) |
| **R** | = Receptacles metered individually |
| **M** | = One meter socket (100 A) |
| **N** | = Two meter socket (100 A each) |
| **V** | = 200 A meter socket |

**Sides and Receptacles**

| R1S1 | R2S1 | R3S1 | R4S1 | R1S2 | R2S2 | R3S2 | R4S2 |
|---|---|---|---|---|---|---|---|
| 0 | 0 | 0 | 0 | 0 | 0 | 0 | 0 |
| 1 | 1 | 1 | 1 | 1 | 1 | 1 | 1 |
| 2 | 2 | 2 | 2 | 2 | 2 | 2 | 2 |
| 3 | 3 | 3 | 3 | 3 | 3 | 3 | 3 |
| 4 | 4 | 4 | 4 | 4 | 4 | 4 | 4 |
| 5 | 5 | 5 | 5 | 5 | 5 | 5 | 5 |
| 6 | 6 | 6 | 6 | 6 | 6 | 6 | 6 |
| 7 | 7 | 7 | 7 | 7 | 7 | 7 | 7 |
| 8 | 8 | 8 | 8 | 8 | 8 | 8 | 8 |

| | |
|---|---|
| **0** | = None |
| **1** | = 20 A GFI duplex |
| **2** | = 30 A, 125 V |
| **3** | = 50 A, 125 V |
| **4** | = 50 A, 125/250 V |
| **5** | = 100 A, 208 V |
| **6** | = 100 A, 250 V |
| **7** | = 100 A, 277/480 V |
| **8** | = 100 A, 480 V |

**Water Option ①**

| | |
|---|---|
| **0** | = 0 |
| **1** | = 1 |
| **2** | = 2 |
| **3** | = Single water meter |
| **4** | = Dual water meter |
| **5** | = Single meter, 2 V |
| **6** | = 1 frost free |
| **7** | = 2 frost free |

**Extra Unmetered GFI Receptacles ②**

| | |
|---|---|
| **0** | = None |
| **1** | = 1 |
| **2** | = 2 |

**Phone Cable TV and Internet Options**

| | Phone Jack | Cable TV Jack | Internet Option |
|---|---|---|---|
| **A** = | 1 | 0 | 0 |
| **B** = | 1 | 0 | 1 |
| **C** = | 1 | 0 | 2 |
| **D** = | 1 | 1 | 0 |
| **E** = | 1 | 1 | 1 |
| **F** = | 1 | 1 | 2 |
| **G** = | 1 | 2 | 0 |
| **H** = | 1 | 2 | 1 |
| **I** = | 1 | 2 | 2 |
| **J** = | 2 | 0 | 0 |
| **K** = | 2 | 0 | 1 |
| **L** = | 2 | 0 | 2 |
| **M** = | 2 | 1 | 0 |
| **N** = | 2 | 1 | 1 |
| **O** = | 2 | 1 | 2 |
| **P** = | 2 | 2 | 0 |
| **Q** = | 2 | 2 | 1 |
| **R** = | 2 | 2 | 2 |
| **S** = | 0 | 2 | 2 |
| **T** = | 0 | 0 | 1 |
| **U** = | 0 | 0 | 2 |
| **V** = | 0 | 1 | 0 |
| **W** = | 0 | 1 | 1 |
| **X** = | 0 | 1 | 2 |
| **Y** = | 0 | 2 | 0 |
| **Z** = | 0 | 2 | 1 |
| **0** = | 0 | 0 | 0 |

**Bus**

| | |
|---|---|
| **S** | = Single-phase 3/8-inch copper busbar |
| **F** | = Three-phase 3/8-inch copper busbar |
| **C** | = Single-phase 3/8-inch Canadian busbar |
| **T** | = Three-phase 3/8-inch Canadian busbar |
| **M** | = Single-phase 300 kcmil mechanical lug bus |
| **Z** | = Three-phase 300 kcmil mechanical lug bus |
| **L** | = Single-phase 350 kcmil mechanical lug bus |
| **P** | = Three-phase 350 kcmil mechanical lug bus |
| **N** | = Single-phase 1/4-inch copper busbar |
| **Q** | = Single-phase 1/4-inch split mechanical busbar |

Receptacle: R1S1 = Receptacle 1, Side 1
R2S1 = Receptacle 2, Side 1
R1S2 = Receptacle 1, Side 2
R2S2 = Receptacle 2, Side 2

***Notes***

① Number represents the quantity of 1/4-turn ball valves with 3/4-inch hose bibs.

② Quantity of 20 A GFI duplex receptacles.

**Accessories**

See **Page V1-T5-75**.

**Dimensions**

Approximate Dimensions in Inches (mm)

### Lighthouse

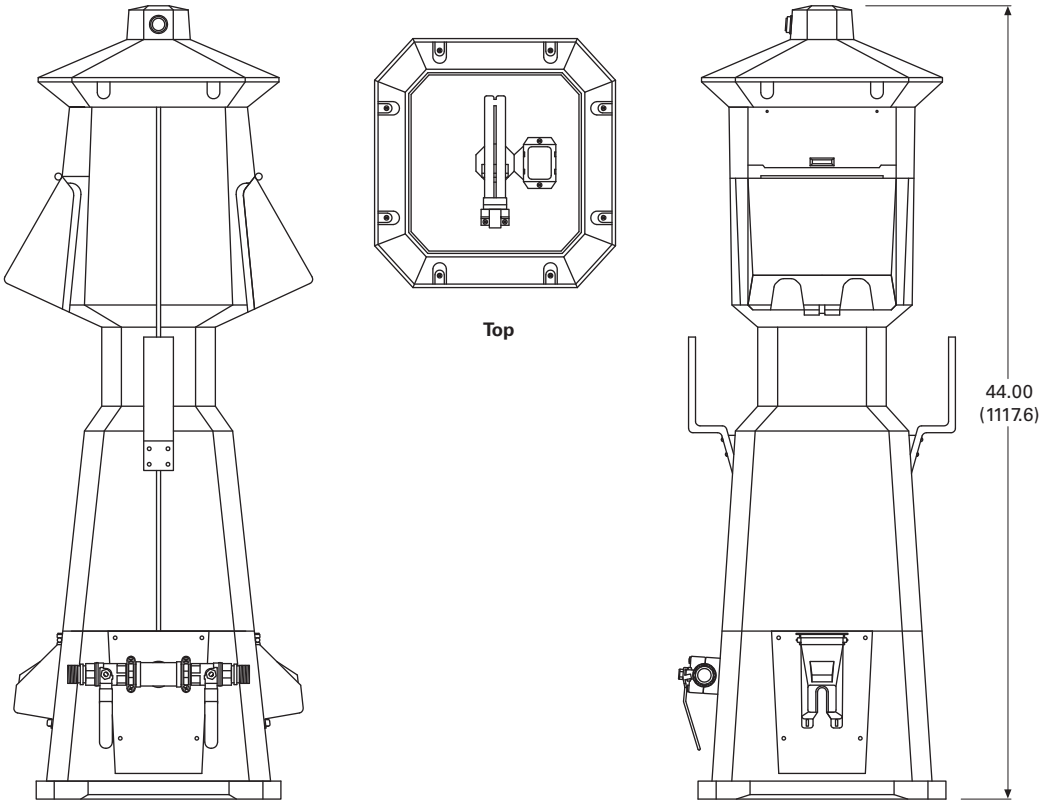


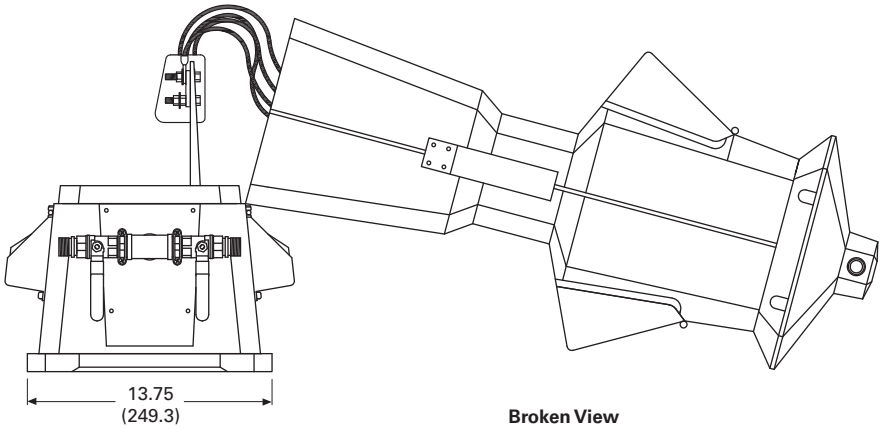

Lighthouse–SS

## Contents


| *Description* | *Page* |
|---|---|
| Power Pedestals | **V1-T5-51** |
| Lighthouse | **V1-T5-54** |
| Lighthouse–SS | |
| Available Options | **V1-T5-59** |
| Catalog Number Selection | **V1-T5-60** |
| Accessories | **V1-T5-61** |
| Dimensions | **V1-T5-61** |
| Admiral–SS | **V1-T5-62** |
| Newport Harbor Mate | **V1-T5-65** |
| Hatteras Light | **V1-T5-69** |
| Firehouse | **V1-T5-73** |
| Smart Start | **V1-T5-79** |
| Mariner | **V1-T5-80** |
| Digital Electronic Kilowatthour Meters | **V1-T5-81** |
| Distribution Equipment—Ground Fault Monitor | **V1-T5-82** |
| Distribution Equipment—Mega Yacht Powerpoint | **V1-T5-83** |
| Distribution Equipment—Substations | **V1-T5-86** |
| Distribution Equipment—Panels | **V1-T5-89** |
| Distribution Equipment—Transformers | **V1-T5-90** |


## Lighthouse–SS

### Product Description

The Lighthouse–SS offers the same standard features and available options as the standard Lighthouse. But, like all of the stainless steel products manufactured here, the Lighthouse–SS is made with high-quality 316L stainless steel for superior quality and performance.

**Note:** 20/125 A GFI receptacle.

**Note:** Wireless remote reading of electronic kilowatt meters.

**Note:** Clear lens.

**Note:** Meter socket for each side powered (to accept glass style meter).

**Note:** Receptacle configurations available:
30 A
30 A / 30 A
30 A / 50 A
50 A / 50 A
100 A (single-phase) 120/240 V
100 A (three-phase) 120/208 V
200 A (three-phase) 480 V

### Features, Benefits and Functions

- Photocell controlled 13 watt fluorescent light (clear lens or amber lens for bug reduction)
- Available with lockable weatherproof doors
- Hose and cable brackets
- Long-lasting maintenance-free 316L stainless steel housing with limited lifetime warranty
- Copper busbar with ratings from 250 to 500 A
- Large removable access panel for easy maintenance and installation
- Backlit faceplate for easy receptacle plug-in at night

## Lighthouse–SS

### Available Options

- Digital electronic metering (one, two or three element meters available)
- 20 A / 125 V GFI receptacle (max. of two GFI receptacles per pedestal)

**Note:** 20 A GFI receptacles are not to be used for shore power.

- High-speed Internet connection
- Wireless remote metering available for water and electricity
- Transient voltage surge suppressor (TVSS) to protect from voltage surges, spikes or lightning on the AC power line (extends warranty on internal parts to three years)
- Single or dual phone and/or cable TV connections
- Single or dual 3/4-inch hose bibs with stainless steel
- Handles LED lighting

*Phone and Cable TV Connections*

*New Door*

*Copper Busbar with Ratings from 250 to 500 A*

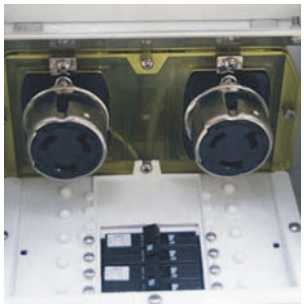

*Backlit Faceplate to Aid in Hooking Up at Night*

## Catalog Number Selection

**L D U 4 7 0 0 0 0 0 0 1 2 K M**

**Type**

| | |
|---|---|
| **L** | = Lighthouse |
| **S** | = LHSS |

**Lighting and Lens Color**

| | | |
|---|---|---|
| **A** | = 7 W light | Amber |
| **B** | = Dual 7 W light | Amber |
| **C** | = 9 W light | Amber |
| **D** | = 13 W light | Amber |
| **E** | = Dual 13 W light | Amber |
| **F** | = No lighting | Amber |
| **G** | = 7 W light | Clear |
| **H** | = Dual 7 W light | Clear |
| **I** | = 9 W light | Clear |
| **J** | = 13 W light | Clear |
| **K** | = Dual 13 W light | Clear |
| **L** | = No lighting | Clear |
| **M** | = 7 W light | Special |
| **N** | = Dual 7 W light | Special |
| **O** | = 9 W light | Special |
| **P** | = 13 W light | Special |
| **Q** | = Dual 13 W light | Special |
| **R** | = No lighting | Special |
| **S** | = 350 MA LED | Amber |
| **T** | = 700 MA LED | Amber |
| **U** | = 350 MA LED | Clear |
| **V** | = 700 MA LED | Clear |
| **W** | = 350 MA LED | Special |
| **Y** | = 700 MA LED | Special |

**Metering Type**

| | |
|---|---|
| **U** | = Unmetered |
| **D** | = Digital electronic meters (side one) |
| **T** | = Digital electronic meters (side two) |
| **B** | = Digital electronic meters (both sides) |
| **R** | = Receptacles metered individually |
| **M** | = One meter socket (100 A) |
| **N** | = Two meter socket (100 A each) |
| **V** | = 200 A meter socket |

**Sides and Receptacles**

| R1S1 | R2S1 | R3S1 | R4S1 | R1S2 | R2S2 | R3S2 | R4S2 |
|---|---|---|---|---|---|---|---|
| 0 | 0 | 0 | 0 | 0 | 0 | 0 | 0 |
| 1 | 1 | 1 | 1 | 1 | 1 | 1 | 1 |
| 2 | 2 | 2 | 2 | 2 | 2 | 2 | 2 |
| 3 | 3 | 3 | 3 | 3 | 3 | 3 | 3 |
| 4 | 4 | 4 | 4 | 4 | 4 | 4 | 4 |
| 5 | 5 | 5 | 5 | 5 | 5 | 5 | 5 |
| 6 | 6 | 6 | 6 | 6 | 6 | 6 | 6 |
| 7 | 7 | 7 | 7 | 7 | 7 | 7 | 7 |
| 8 | 8 | 8 | 8 | 8 | 8 | 8 | 8 |

| | |
|---|---|
| **0** | = None |
| **1** | = 20 A GFI duplex |
| **2** | = 30 A, 125 V |
| **3** | = 50 A, 125 V |
| **4** | = 50 A, 125/250 V |
| **5** | = 100 A, 208 V |
| **6** | = 100 A, 250 V |
| **7** | = 100 A, 277/480 V |
| **8** | = 100 A, 480 V |

**Water Option ①**

| | |
|---|---|
| **0** | = 0 |
| **1** | = 1 |
| **2** | = 2 |
| **3** | = Single water meter |
| **4** | = Dual water meter |
| **5** | = Single meter, 2 V |
| **6** | = 1 frost free |
| **7** | = 2 frost free |

**Extra Unmetered GFI Receptacles ②**

| | |
|---|---|
| **0** | = None |
| **1** | = 1 |
| **2** | = 2 |

**Phone Cable TV and Internet Options**

| | Phone Jack | Cable TV Jack | Internet Option |
|---|---|---|---|
| **A** | = 1 | 0 | 0 |
| **B** | = 1 | 0 | 1 |
| **C** | = 1 | 0 | 2 |
| **D** | = 1 | 1 | 0 |
| **E** | = 1 | 1 | 1 |
| **F** | = 1 | 1 | 2 |
| **G** | = 1 | 2 | 0 |
| **H** | = 1 | 2 | 1 |
| **I** | = 1 | 2 | 2 |
| **J** | = 2 | 0 | 0 |
| **K** | = 2 | 0 | 1 |
| **L** | = 2 | 0 | 2 |
| **M** | = 2 | 1 | 0 |
| **N** | = 2 | 1 | 1 |
| **O** | = 2 | 1 | 2 |
| **P** | = 2 | 2 | 0 |
| **Q** | = 2 | 2 | 1 |
| **R** | = 2 | 2 | 2 |
| **S** | = 0 | 2 | 2 |
| **T** | = 0 | 0 | 1 |
| **U** | = 0 | 0 | 2 |
| **V** | = 0 | 1 | 0 |
| **W** | = 0 | 1 | 1 |
| **X** | = 0 | 1 | 2 |
| **Y** | = 0 | 2 | 0 |
| **Z** | = 0 | 2 | 1 |
| **0** | = 0 | 0 | 0 |

**Bus**

| | |
|---|---|
| **S** | = Single-phase 3/8-inch copper busbar |
| **F** | = Three-phase 3/8-inch copper busbar |
| **C** | = Single-phase 3/8-inch Canadian busbar |
| **T** | = Three-phase 3/8-inch Canadian busbar |
| **M** | = Single-phase 300 kcmil mechanical lug bus |
| **Z** | = Three-phase 300 kcmil mechanical lug bus |
| **L** | = Single-phase 350 kcmil mechanical lug bus |
| **P** | = Three-phase 350 kcmil mechanical lug bus |
| **N** | = Single-phase 1/4-inch copper busbar |
| **Q** | = Single-phase 1/4-inch split mechanical busbar |

Receptacle: R1S1 = Receptacle 1, Side 1
R2S1 = Receptacle 2, Side 1
R1S2 = Receptacle 1, Side 2
R2S2 = Receptacle 2, Side 2

***Notes***

① Number represents the quantity of 1/4-turn ball valves with 3/4-inch hose bibs.

② Quantity of 20 A GFI duplex receptacles.

**Accessories**

See **Page V1-T5-75**.

**Dimensions**

Approximate Dimensions in Inches (mm)

**Lighthouse–SS**

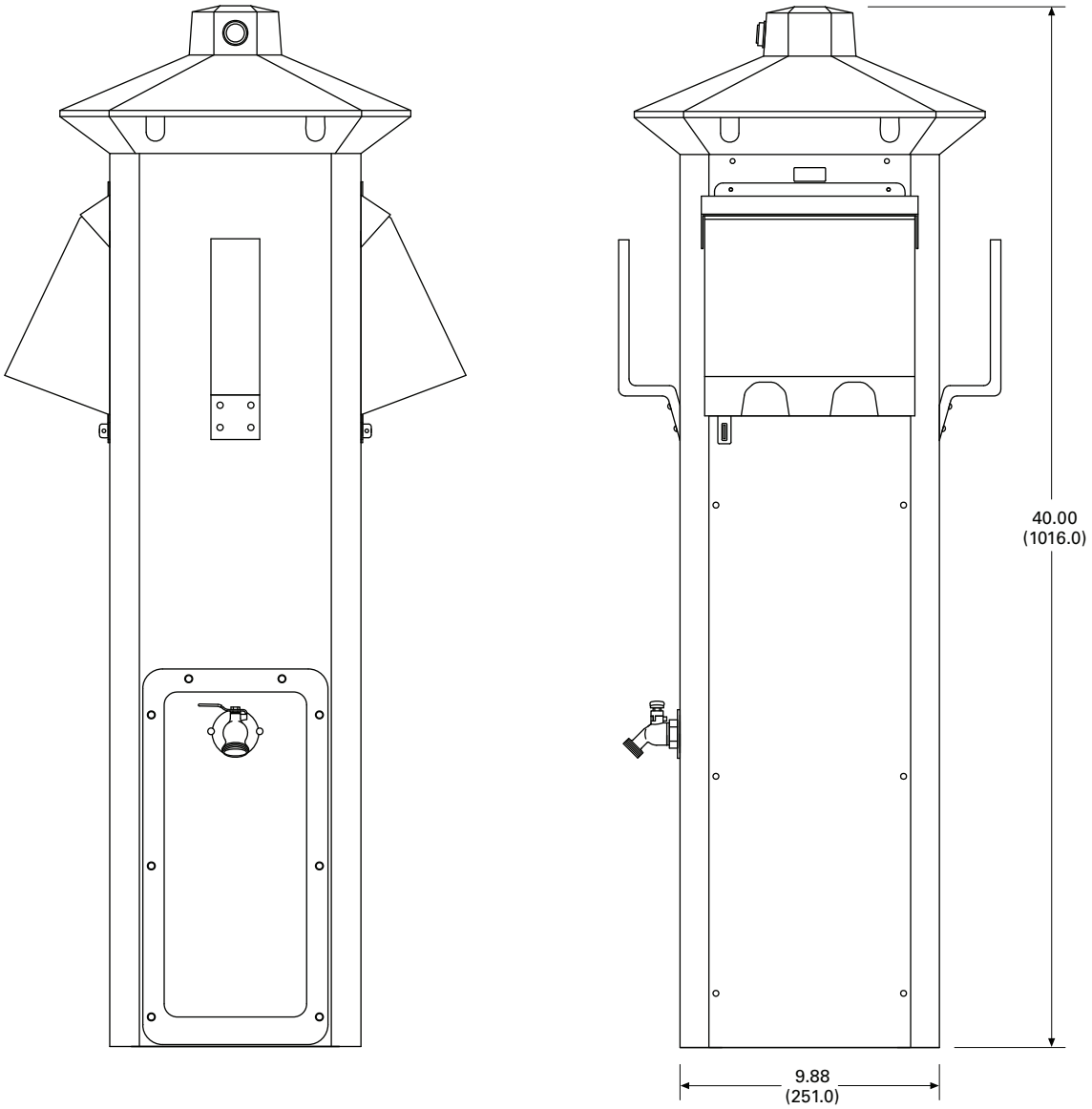

Admiral–SS

## Contents


| Description | Page |
|---|---|
| Power Pedestals | V1-T5-51 |
| Lighthouse | V1-T5-54 |
| Lighthouse–SS | V1-T5-58 |
| Admiral–SS | |
| Catalog Number Selection | V1-T5-63 |
| Accessories | V1-T5-64 |
| Dimensions | V1-T5-64 |
| Newport Harbor Mate | V1-T5-65 |
| Hatteras Light | V1-T5-69 |
| Firehouse | V1-T5-73 |
| Smart Start | V1-T5-79 |
| Mariner | V1-T5-80 |
| Digital Electronic Kilowatthour Meters | V1-T5-81 |
| Distribution Equipment—Ground Fault Monitor | V1-T5-82 |
| Distribution Equipment—Mega Yacht Powerpoint | V1-T5-83 |
| Distribution Equipment—Substations | V1-T5-86 |
| Distribution Equipment—Panels | V1-T5-89 |
| Distribution Equipment—Transformers | V1-T5-90 |


## Admiral–SS

### Product Description

Truly the flagship of our unitized pedestal line, the Admiral–SS possesses amperage capabilities up to 500 A and voltages of 480/277 three-phase, 120/240 single-phase and combinations of these receptacles all in one unit to serve nearly any size Mega Yacht.

### Features

- Heavy 316L stainless steel housing that is powder coated with a polyester resin
- Photocell controlled 13 watt fluorescent light with clear lens that provides 360 degrees of lighting

### Available Options

- Dual phone and/or cable TV connections
- Four 100 A receptacles of any two voltage combinations such as 277/480 three-phase, 120/208 three-phase or 120/240 single-phase
- 200 A / 480 V receptacles
- when the 100 A 120/240 V receptacles are used, two 50 A 120/240 V receptacles can also be provided for a total of 500 A
- 20 A / 125 V GFI receptacle (max. of two GFI receptacles per pedestal)

**Note:** 20 A GFI receptacles are not to be used for shore power.

- Single or dual Cat5 high-speed Internet connections
- Single or dual water 1/4-turn ball valves with 3/4-inch hose bibs and stainless steel handles
- Digital metering available
- Wireless remote metering available for water and electricity
- LED lighting

## Catalog Number Selection

**A D U 4 7 0 0 0 0 0 0 1 2 K M**

**Type**

| | |
|---|---|
| **A** | = Admiral–SS |

**Lighting and Lens Color**

| | | |
|---|---|---|
| **A** | = 7 W light | Amber |
| **B** | = Dual 7 W light | Amber |
| **C** | = 9 W light | Amber |
| **D** | = 13 W light | Amber |
| **E** | = Dual 13 W light | Amber |
| **F** | = No lighting | Amber |
| **G** | = 7 W light | Clear |
| **H** | = Dual 7 W light | Clear |
| **I** | = 9 W light | Clear |
| **J** | = 13 W light | Clear |
| **K** | = Dual 13 W light | Clear |
| **L** | = No lighting | Clear |
| **M** | = 7 W light | Special |
| **N** | = Dual 7 W light | Special |
| **O** | = 9 W light | Special |
| **P** | = 13 W light | Special |
| **Q** | = Dual 13 W light | Special |
| **R** | = No lighting | Special |
| **S** | = 350 MA LED | Amber |
| **T** | = 700 MA LED | Amber |
| **U** | = 350 MA LED | Clear |
| **V** | = 700 MA LED | Clear |
| **W** | = 350 MA LED | Special |
| **Y** | = 700 MA LED | Special |

**Metering Type**

| | |
|---|---|
| **U** | = Unmetered |
| **D** | = Digital electronic meters (side one) |
| **T** | = Digital electronic meters (side two) |
| **B** | = Digital electronic meters (both sides) |
| **M** | = One meter socket (100 A) |
| **N** | = Two meter socket (100 A each) |
| **V** | = 200 A meter socket |

**Sides and Receptacles**

| R1S1 | R2S1 | R3S1 | R4S1 | R1S2 | R2S2 | R3S2 | R4S2 |
|---|---|---|---|---|---|---|---|
| 0 | 0 | 0 | 0 | 0 | 0 | 0 | 0 |
| 1 | 1 | 1 | 1 | 1 | 1 | 1 | 1 |
| 2 | 2 | 2 | 2 | 2 | 2 | 2 | 2 |
| 3 | 3 | 3 | 3 | 3 | 3 | 3 | 3 |
| 4 | 4 | 4 | 4 | 4 | 4 | 4 | 4 |
| 5 | 5 | 5 | 5 | 5 | 5 | 5 | 5 |
| 6 | 6 | 6 | 6 | 6 | 6 | 6 | 6 |
| 7 | 7 | 7 | 7 | 7 | 7 | 7 | 7 |
| 8 | 8 | 8 | 8 | 8 | 8 | 8 | 8 |

| | |
|---|---|
| **0** | = None |
| **1** | = 20 A GFI duplex |
| **2** | = 30 A, 125 V |
| **3** | = 50 A, 125 V |
| **4** | = 50 A, 125/250 V |
| **5** | = 100 A, 208 V |
| **6** | = 100 A, 250 V |
| **7** | = 100 A, 277/480 V |
| **8** | = 100 A, 480 V |

**Water Option ①**

| | |
|---|---|
| **0** | = 0 |
| **1** | = 1 |
| **2** | = 2 |
| **3** | = Single water meter |
| **4** | = Dual water meter |
| **5** | = Single meter, 2 V |

**Extra Unmetered GFI Receptacles**

| | |
|---|---|
| **0** | = None |
| **1** | = 1 |
| **2** | = 2 |

**Phone Cable TV and Internet Options**

| Phone Jack | Cable TV Jack | Internet Option ② |
|---|---|---|
| **A** = 1 | 0 | 0 |
| **B** = 1 | 0 | 1 |
| **C** = 1 | 0 | 2 |
| **D** = 1 | 1 | 0 |
| **E** = 1 | 1 | 1 |
| **F** = 1 | 1 | 2 |
| **G** = 1 | 2 | 0 |
| **H** = 1 | 2 | 1 |
| **I** = 1 | 2 | 2 |
| **J** = 2 | 0 | 0 |
| **K** = 2 | 0 | 1 |
| **L** = 2 | 0 | 2 |
| **M** = 2 | 1 | 0 |
| **N** = 2 | 1 | 1 |
| **O** = 2 | 1 | 2 |
| **P** = 2 | 2 | 0 |
| **Q** = 2 | 2 | 1 |
| **R** = 2 | 2 | 2 |
| **S** = 0 | 2 | 2 |
| **T** = 0 | 0 | 1 |
| **U** = 0 | 0 | 2 |
| **V** = 0 | 1 | 0 |
| **W** = 0 | 1 | 1 |
| **X** = 0 | 1 | 2 |
| **Y** = 0 | 2 | 0 |
| **Z** = 0 | 2 | 1 |
| **0** = 0 | 0 | 0 |

**Bus**

| | |
|---|---|
| **S** | = Single-phase 3/8-inch copper busbar |
| **F** | = Three-phase 3/8-inch copper busbar |
| **C** | = Single-phase 3/8-inch Canadian busbar |
| **T** | = Three-phase 3/8-inch Canadian busbar |
| **M** | = Single-phase 300 kcmil mechanical lug bus |
| **Z** | = Three-phase 300 kcmil mechanical lug bus |
| **L** | = Single-phase 350 kcmil mechanical lug bus |
| **P** | = Three-phase 350 kcmil mechanical lug bus |
| **N** | = Single-phase 1/4-inch copper busbar |
| **Q** | = Single-phase 1/4-inch split mechanical busbar |
| **D** | = Dual-phase busbar |

Receptacles: R1S1 = Receptacle 1, Side 1
R2S1 = Receptacle 2, Side 1
R3S1 = Receptacle 3, Side 1
R4S1 = Receptacle 3, Side 1
R1S2 = Receptacle 1, Side 2
R2S2 = Receptacle 2, Side 2
R3S2 = Receptacle 3, Side 2
R4S2 = Receptacle 3, Side 2

***Notes***

① Number represents the quantity of 1/4-turn ball valves with 3/4-inch hose bibs.

② Number represents the quantity of RJ-45 high-speed Internet jacks.

Internet option also available. Contact factory for details.

**Accessories**

See **Page V1-T5-75**.

**Dimensions**

Approximate Dimensions in Inches (mm)

### Admiral–SS

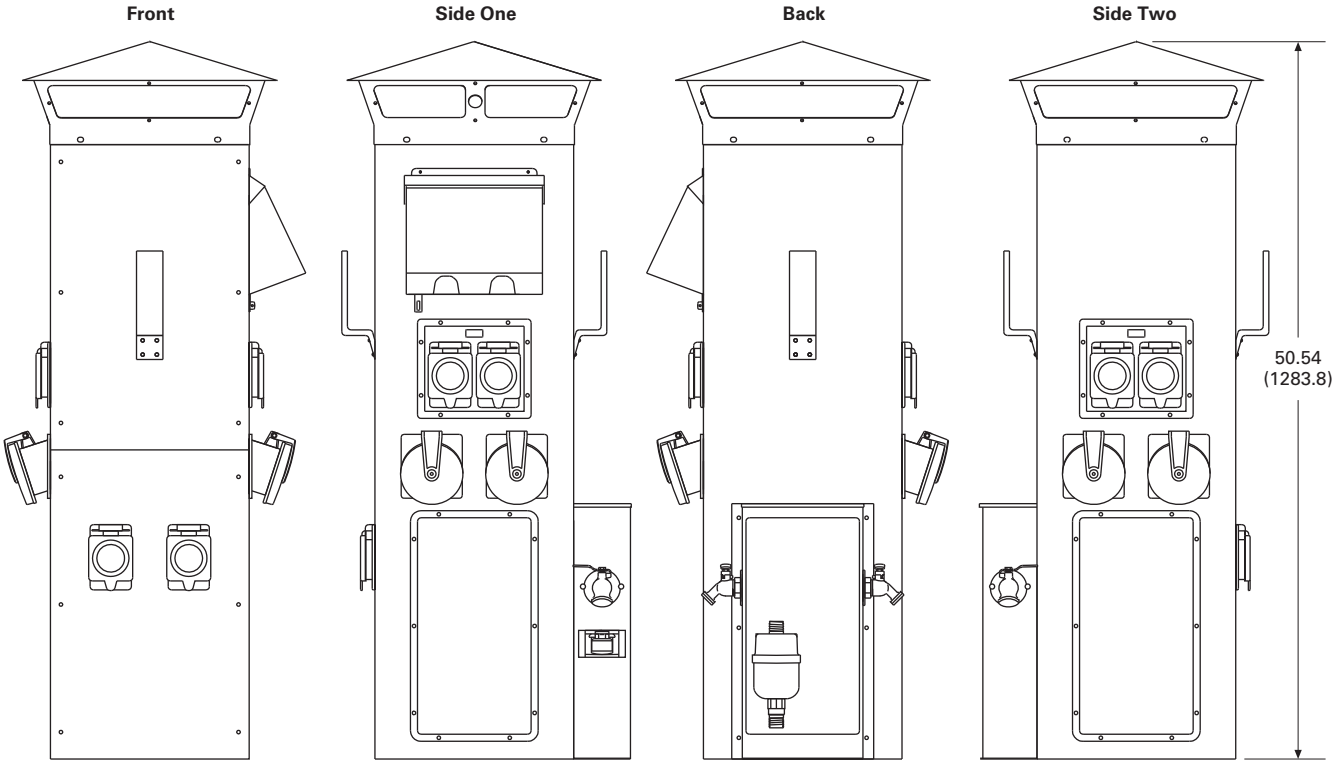


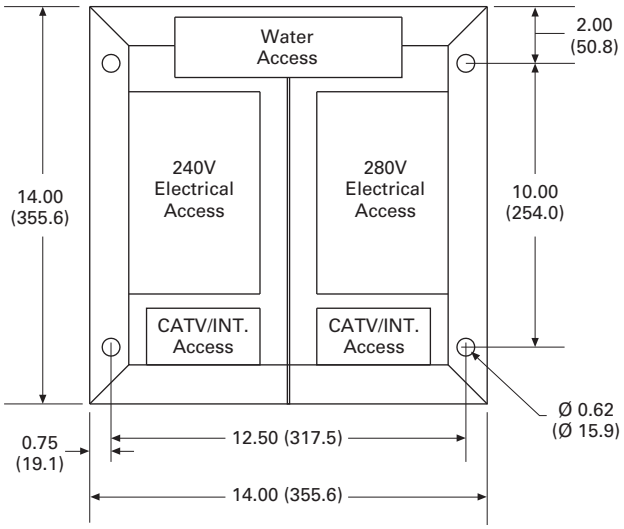


**Base Footprint**

Newport Harbor Mate

## Contents


| *Description* | *Page* |
|---|---|
| Power Pedestals | **V1-T5-51** |
| Lighthouse | **V1-T5-54** |
| Lighthouse–SS | **V1-T5-58** |
| Admiral–SS | **V1-T5-62** |
| Newport Harbor Mate | |
| Available Options | **V1-T5-66** |
| Catalog Number Selection | **V1-T5-67** |
| Accessories | **V1-T5-68** |
| Dimensions | **V1-T5-68** |
| Hatteras Light | **V1-T5-69** |
| Firehouse | **V1-T5-73** |
| Smart Start | **V1-T5-79** |
| Mariner | **V1-T5-80** |
| Digital Electronic Kilowatthour Meters | **V1-T5-81** |
| Distribution Equipment—Ground Fault Monitor | **V1-T5-82** |
| Distribution Equipment—Mega Yacht Powerpoint | **V1-T5-83** |
| Distribution Equipment—Substations | **V1-T5-86** |
| Distribution Equipment—Panels | **V1-T5-89** |
| Distribution Equipment—Transformers | **V1-T5-90** |




## Newport Harbor Mate

### Product Description

Five years of development and 30 prototype models have yielded this unit the most innovative mini-power center available. Host to a variety of electrical services, contained in a compact yet strong housing, the Newport Harbor Mate is packed with features.

### Features, Benefits and Functions

- Tough and durable resin housing with UV inhibitor for lasting finish
- Photocell controlled 7 and 9 watt fluorescent light (clear lens or amber lens for bug reduction)
- Designed to mount on a dock box, piling or stainless steel stand
- Copper busbar with a maximum rating of 140 A

## Newport Harbor Mate (Shown with Optional Stand)

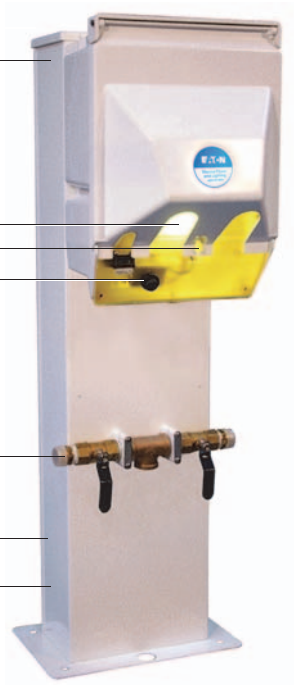


### Available Options

- Available with single, dual or combination of 30 A or 50 A receptacles
- 20 A / 125 V GFI receptacle (max. of two GFI receptacles per pedestal)

**Note:** 20 A GFI receptacles are not to be used for shore power.

- Single or dual phone, cable TV, high-speed Internet connections
- Electronic metering (one or two element meters available)
- 316L stainless steel stand
- LED lighting

***Mounting Option***

***Backlit Faceplate***

## Catalog Number Selection

**N A Y B U 4 3 0 1 1 2 W M**

**Type**
- **N** = NP Harbor Mate
- **C** = NP Camp Mate

**Photocell**
- **Y** = Yes
- **N** = No

**Lighting and Lens Color**

| | |
|---|---|
| **A** = 7 W light | Amber |
| **C** = 9 W light | Amber |
| **F** = No lighting | Amber |
| **G** = 7 W light | Clear |
| **I** = 9 W light | Clear |
| **L** = No lighting | Clear |
| **M** = 7 W light | Special |
| **O** = 9 W light | Special |
| **R** = No lighting | Special |
| **S** = 350 MA LED | Amber |
| **T** = 700 MA LED | Amber |
| **U** = 350 MA LED | Clear |
| **V** = 700 MA LED | Clear |
| **W** = 350 MA LED | Special |
| **Y** = 700 MA LED | Special |

**Lighting Protection**
- **B** = Breaker protected
- **F** = Fuse protected

**Metering Type** ①
- **U** = Unmetered
- **D** = Digital electronic meters
- **R** = Receptacles metered individually

**Sides and Receptacles**

| R1S1 | R2S1 | R3S1 |
|---|---|---|
| **0** | **0** | **0** |
| **1** | **1** | **1** |
| **2** | **2** | |
| **3** | **3** | |
| **4** | **4** | |

- **0** = None
- **1** = 20 A GFI duplex
- **2** = 30 A, 125 V
- **3** = 50 A, 125 V
- **4** = 50 A, 125/250 V

**Stand**
- **0** = 0
- **1** = 1

**Water Option** ②
- **0** = 0
- **1** = 1
- **2** = 2

**Hard Wired Breakers**

**S1**
- **0** = None
- **2** = 20 A, two-pole
- **3** = 30 A

**Bus**
- **S** = Single-phase 1/4-inch copper busbar
- **F** = Three-phase 1/4-inch copper busbar
- **C** = Single-phase 1/4-inch Canadian busbar
- **M** = Mechanical lug 2/0
- **Q** = Single-phase 1/4-inch split mechanical busbar (with stand ONLY)
- **A** = 1/4-inch Canadian mechanical

**Phone Cable TV and Internet Options**

| | Phone Jack | Cable TV Jack | Internet Option |
|---|---|---|---|
| **A** = | 1 | 0 | 0 |
| **B** = | 1 | 0 | 1 |
| **C** = | 1 | 0 | 2 |
| **D** = | 1 | 1 | 0 |
| **E** = | 1 | 1 | 1 (Camp Mate only) |
| **T** = | 0 | 0 | 1 |
| **V** = | 0 | 1 | 0 |
| **W** = | 0 | 1 | 1 |
| **0** = | 0 | 0 | 0 |

Receptacles: R1 = Receptacle 1
R2 = Receptacle 2

***Notes***

① 20 A GFIs not metered.

② Number represents the quantity of 1/4-turn ball valves with 3/4-inch hose bibs (with stand only).

**Accessories**

See **Page V1-T5-75**.

**Dimensions**

Approximate Dimensions in Inches (mm)

### Newport Harbor Mate

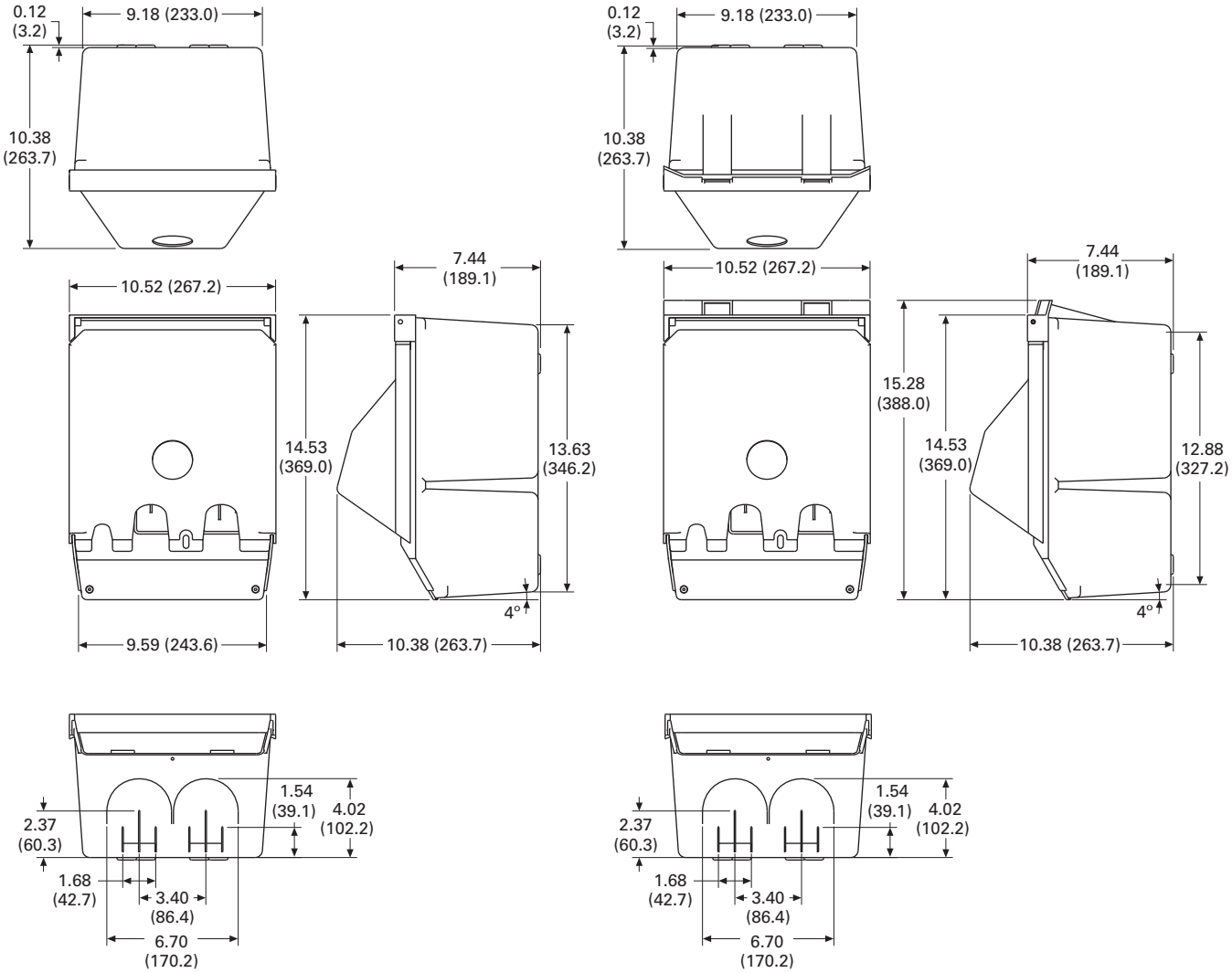


**Newport Redesign**

**Newport Redesign With Meters**

Hatteras Light

## Contents


| *Description* | *Page* |
|---|---|
| Power Pedestals | **V1-T5-51** |
| Lighthouse | **V1-T5-54** |
| Lighthouse–SS | **V1-T5-58** |
| Admiral–SS | **V1-T5-62** |
| Newport Harbor Mate | **V1-T5-65** |
| Hatteras Light | |
| Available Options | **V1-T5-70** |
| Catalog Number Selection | **V1-T5-71** |
| Accessories | **V1-T5-72** |
| Dimensions | **V1-T5-72** |
| Firehouse | **V1-T5-73** |
| Smart Start | **V1-T5-79** |
| Mariner | **V1-T5-80** |
| Digital Electronic Kilowatthour Meters | **V1-T5-81** |
| Distribution Equipment—Ground Fault Monitor | **V1-T5-82** |
| Distribution Equipment—Mega Yacht Powerpoint | **V1-T5-83** |
| Distribution Equipment—Substations | **V1-T5-86** |
| Distribution Equipment—Panels | **V1-T5-89** |
| Distribution Equipment—Transformers | **V1-T5-90** |




## Hatteras Light

### Product Description

The Hatteras® Light is an elegant and low cost alternative to the Lighthouse. It uses the same 360 degree light assembly as the Lighthouse, yet is only 30 inches tall. Thousands of these attractive pedestals are found not only in marinas, but also around pools, deck areas, boardwalks and landscape areas. The housing will never rust or corrode and comes with a limited lifetime warranty. This unit is popular for smaller slips at marinas with the Lighthouse and for private docks.

**Note:** Wireless remote reading of electronic kilowatt meters.

**Note:** Clear lens.

**Note:** Custom paint color.

### Features, Benefits and Functions

- Photocell controlled 13 watt fluorescent light (clear lens or amber lens for bug reduction)
- Circuit breakers
- Heavy resin housing with a two-part polyurethane coating for a UV resistant, long-lasting finish
- Copper busbar with a maximum rating of 140 A

## Hatteras Light

### Available Options

- 20 A / 125 V GFI receptacle (max. of two GFI receptacles per pedestal)

**Note:** 20 A GFI receptacles are not to be used for shore power.

- Digital electronic metering (one or two element meter available)
- Single or dual phone, cable TV, high-speed Internet connections
- Single or dual 1/2-inch or 3/4-inch silcock with stainless steel handles
- LED lighting

*Copper Busbar with Ratings up to 140 A*

*20 A / 125 A GFI Receptacle*

*Faceplate*

## Catalog Number Selection

**H D Y B D 4 7 0 1 2 A M**

**Type**

| | |
|---|---|
| **H** | = Hatteras Light |
| **R** | = Park Light |

**Photocell**

| | |
|---|---|
| **Y** | = Yes |
| **N** | = No |

**Lighting Protection**

| | |
|---|---|
| **B** | = Breaker protected |
| **F** | = Fuse protected |

**Metering Type** ①

| | |
|---|---|
| **U** | = Unmetered |
| **D** | = Digital electronic meters |
| **R** | = Receptacles metered individually |

**Lighting and Lens Color**

| | | |
|---|---|---|
| **A** | = 7 W light | Amber |
| **B** | = Dual 7 W light | Amber |
| **C** | = 9 W light | Amber |
| **D** | = 13 W light | Amber |
| **E** | = Dual 13 W light | Amber |
| **F** | = No lighting | Amber |
| **G** | = 7 W light | Clear |
| **H** | = Dual 7 W light | Clear |
| **I** | = 9 W light | Clear |
| **J** | = 13 W light | Clear |
| **K** | = Dual 13 W light | Clear |
| **L** | = No lighting | Clear |
| **M** | = 7 W light | Special |
| **N** | = Dual 7 W light | Special |
| **O** | = 9 W light | Special |
| **P** | = 13 W light | Special |
| **Q** | = Dual 13 W light | Special |
| **R** | = No lighting | Special |
| **S** | = 350 MA LED | Amber |
| **T** | = 700 MA LED | Amber |
| **U** | = 350 MA LED | Clear |
| **V** | = 700 MA LED | Clear |
| **W** | = 350 MA LED | Special |
| **Y** | = 700 MA LED | Special |

**Sides and Receptacles**

| R1S1 | R2S1 | R1S2 |
|---|---|---|
| **0** | **0** | **0** |
| **1** | **1** | **1** |
| **2** | **2** | **2** |
| **3** | **3** | **3** |
| **4** | **4** | **4** |

| | |
|---|---|
| **0** | = None |
| **1** | = 20 A GFI duplex |
| **2** | = 30 A, 125 V |
| **3** | = 50 A, 125 V |
| **4** | = 50 A, 125/250 V |

**Water Option** ②

| | |
|---|---|
| **0** | = 0 |
| **1** | = 1 (1/2-inch) |
| **2** | = 2 (1/2-inch) |
| **3** | = 1 (3/4-inch) |
| **4** | = 2 (3/4-inch) |

**Hard Wired Breakers**

| S1 | |
|---|---|
| **0** | = None |
| **2** | = 20 A, two-pole |
| **3** | = 30 A |

**Bus**

| | |
|---|---|
| **S** | = Single-phase 1/4-inch copper busbar |
| **F** | = Three-phase 1/4-inch copper busbar |
| **C** | = Single-phase 1/4-inch Canadian busbar |
| **M** | = Mechanical lug 2/0 ③ |
| **A** | = 1/4-inch Canadian mechanical |

**Phone Cable TV and Internet Options**

| | Phone Jack | Cable TV Jack | Internet Option |
|---|---|---|---|
| **A** = | 1 | 0 | 0 |
| **B** = | 1 | 0 | 1 |
| **C** = | 1 | 0 | 2 |
| **D** = | 1 | 1 | 0 |
| **E** = | 1 | 1 | 1 |
| **F** = | 1 | 1 | 2 |
| **G** = | 1 | 2 | 0 |
| **H** = | 1 | 2 | 1 |
| **I** = | 1 | 2 | 2 |
| **J** = | 2 | 0 | 0 |
| **M** = | 2 | 1 | 0 |
| **P** = | 2 | 2 | 0 |
| **S** = | 0 | 2 | 2 |
| **T** = | 0 | 0 | 1 |
| **U** = | 0 | 0 | 2 |
| **V** = | 0 | 1 | 0 |
| **W** = | 0 | 1 | 1 |
| **X** = | 0 | 1 | 2 |
| **Y** = | 0 | 2 | 0 |
| **Z** = | 0 | 2 | 1 |

Receptacles: R1 = Receptacle 1
R2 = Receptacle 2

***Notes***

① 20 A GFIs not metered.
② Number represents the quantity of 1/4-turn ball valves with 3/4-inch hose bibs.
③ Wire size #2/0 kcmil or less.

**Accessories**

See **Page V1-T5-75**.

**Dimensions**

Approximate Dimensions in Inches (mm)

### Hatteras

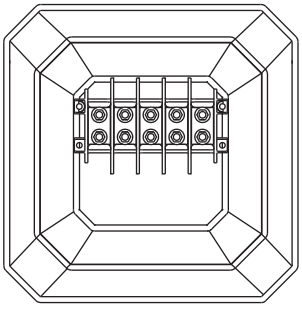

**Busbar Access Top Removed**

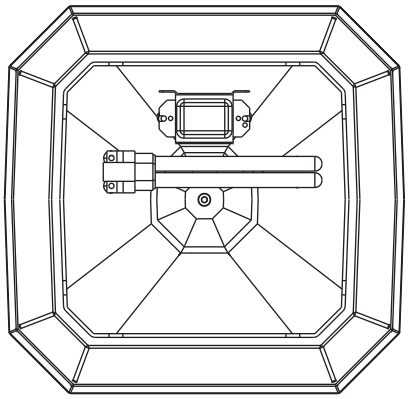

**Inside Top**

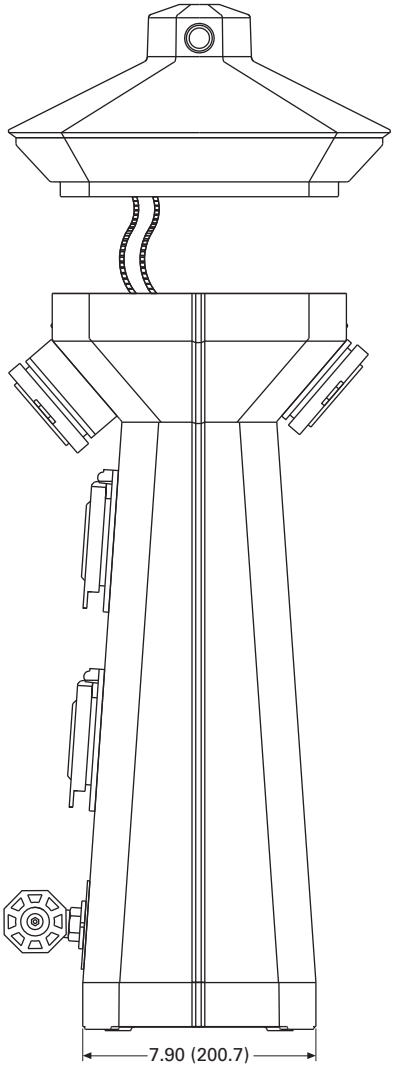


**Side View**

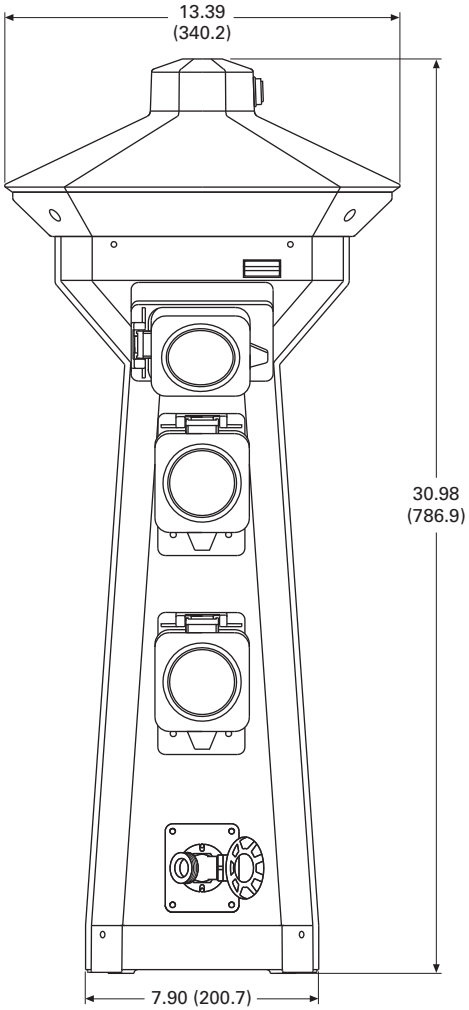


**Front View**

Firehouse

## Contents


| *Description* | *Page* |
|---|---|
| Power Pedestals | V1-T5-51 |
| Lighthouse | V1-T5-54 |
| Lighthouse–SS | V1-T5-58 |
| Admiral–SS | V1-T5-62 |
| Newport Harbor Mate | V1-T5-65 |
| Hatteras Light | V1-T5-69 |
| Firehouse | |
| Available Options | V1-T5-74 |
| Catalog Number Selection | V1-T5-74 |
| Accessories | V1-T5-75 |
| Dimensions | V1-T5-78 |
| Smart Start | V1-T5-79 |
| Mariner | V1-T5-80 |
| Digital Electronic Kilowatthour Meters | V1-T5-81 |
| Distribution Equipment—Ground Fault Monitor | V1-T5-82 |
| Distribution Equipment—Mega Yacht Powerpoint | V1-T5-83 |
| Distribution Equipment—Substations | V1-T5-86 |
| Distribution Equipment—Panels | V1-T5-89 |
| Distribution Equipment—Transformers | V1-T5-90 |




## Firehouse

### Product Description

Created as a complete solution for fire and rescue needs, this pedestal features fire extinguisher storage and a mounted alarm strobe light and siren, as well as an optional life ring. This unit is well equipped for any marina emergency. The alarm strobe light and siren can be automatically activated when the door is open or optional life ring is removed.

### Features, Benefits and Functions

- Alarm strobe light and siren: automatically activated when door is open or optional life ring is removed
- Photocell controlled 13 watt fluorescent light (clear lens or amber lens for bug reduction)
- 10 lb ABC Type fire extinguisher
- 316L stainless steel polyester powder-coated housing
- Polycarbonate top assembly

### Firehouse

### Available Options

- 24-inch life ring
- 20 lb ABC Type fire extinguisher available

### Catalog Number Selection

**F A Y A E N**

**Type**
**F** = Firehouse

**Photocell**
**Y** = Yes
**N** = No

**Alarm/Strobe**
**A** = Include alarm/strobe
**N** = No alarm/strobe

**Fire Extinguisher**
**E** = Include 10 lb extinguisher
**N** = No extinguisher
**X** = Include 20 lb extinguisher

**24-Inch Life Ring**
**R** = Include life ring
**N** = No life ring

**Lighting and Lens Color**

| | | | | | |
|---|---|---|---|---|---|
| **A** = 7 W light | Amber | **I** = 9 W light | Clear | **Q** = Dual 13 W light | Special |
| **B** = Dual 7 W light | Amber | **J** = 13 W light | Clear | **R** = No lighting | Special |
| **C** = 9 W light | Amber | **K** = Dual 13 W light | Clear | **S** = 350 MA LED | Amber |
| **D** = 13 W light | Amber | **L** = No lighting | Clear | **T** = 700 MA LED | Amber |
| **E** = Dual 13 W light | Amber | **M** = 7 W light | Special | **U** = 350 MA LED | Clear |
| **F** = No lighting | Amber | **N** = Dual 7 W light | Special | **V** = 700 MA LED | Clear |
| **G** = 7 W light | Clear | **O** = 9 W light | Special | **W** = 350 MA LED | Special |
| **H** = Dual 7 W light | Clear | **P** = 13 W light | Special | **Y** = 700 MA LED | Special |

## Accessories

***Accessories for Custom Design Marina Products, Resin and Stainless Steel Pedestals and Power Products***

### Replacement Parts Catalog Numbers

| Description | Catalog Number |
|---|---|
| **Receptacles** | |
| 20 A GFCI duplex | **MPL3038** |
| 30 A 125 V twistlock | **MPL3039** |
| 50 A 125 V twistlock | **MPL3040** |
| 50 A 125/250 V twistlock | **MPL3045** |
| 100 A 120/240 V pin and sleeve | **MPL4100R12W** |
| 100 A 120/208 pin and sleeve | **MPL5100R9W** |
| 100 A 480 V four-wire pin and sleeve | **MPL4100R7W** |
| 100 A 480 V five-wire pin and sleeve | **MPL5100R7W** |
| 200 A 277/480 V pin and sleeve (Russellstoll®) | **MPL4200R7W** |
| 30 A 125 V RV | **RV3042** |
| 50 A 125/250 V RV | **RV3043** |
| **Circuit Breakers** | |
| 20 A 125 V single-pole | **QCF1020** |
| 20 A 125 V single-pole GFCI | **QCGF1020** |
| 30 A 125 V single-pole | **QCF1030** |
| 30 A 125 V single-pole GFCI | **QCGF1030** |
| 50 A 125 V single-pole | **QCF1050** |
| 20 A 125/250 V two-pole | **QCF2020** |
| 20 A 125/250 V two-pole GFCI | **QCGF2020** |
| 30 A 125/250 V two-pole | **QCF2030** |
| 30 A 125/250 V two-pole GFCI | **QCGF2030** |
| 50 A 125/250 V two-pole | **QCF2050** |
| 50 A 125/250 V two-pole GFCI | **QCGF2050** |
| 60 A 125/250 V two-pole | **QCF2060** |
| 100 A 125/250 V two-pole | **GHC2100D** |
| 100 A 120/208 V three-pole | **GHC3100D** |
| 200 A 277/480 V three-pole | **JT2200FA** |
| **Fluorescent Light Assembly** | |
| 13 watt 120 V 60 Hz ballast | **MPL2400** |
| 7 watt 120 V 60 Hz ballast | **MPL2401** |
| 13 watt socket | **MPL3079** |
| 7 watt socket | **MPL3077** |
| 13 watt fluorescent bulb | **MPL3018** |
| 7 watt fluorescent bulb | **MPL3019** |
| Photocell | **MPL3044** |
| Photocell nuts | **MPL3034** |
| Lighthouse in-line fuse | **MPL3026** |
| Lighthouse in-line fuse holder | **MPL3027** |
| **Lighthouse, Lighthouse–SS, Powerhouse, Powerhouse–SS, Hatteras, Park Light** | |
| Top with complete light and lens assembly | **MPL6003A** |
| Top with complete light and lens assembly—fused | **MPL6003FA** |
| Top only | **MPL6003** |
| Amber lens | **MPL6005** |
| Clear lens | **MPL6008** |

### Replacement Parts Catalog Numbers, continued

| Description | Catalog Number |
|---|---|
| **Lighthouse, Lighthouse–SS, Powerhouse, Powerhouse–SS, Hatteras, Park Light, continued** | |
| 20 A GFCI receptacle external cover set | **MPL1101** |
| 30 A receptacle external cover set | **MPL1102** |
| 50 A receptacle external cover set | **MPL1105** |
| Single-pole external breaker cover set | **MPL11061** |
| Two-pole external breaker cover set | **MPL11062** |
| Three-pole external breaker cover set | **MPL11063** |
| **Lighthouse, Lighthouse–SS, Powerhouse, Powerhouse–SS** | |
| Lighthouse/Powerhouse pedestal main housing | **MPL6006** |
| Lighthouse–SS/Powerhouse–SS pedestal main housing | **MPL6006S** |
| Lighthouse/Powerhouse main door | **MPL6007** |
| Lighthouse–SS/Powerhouse–SS main door | **MPL6007S** |
| Lighthouse/Powerhouse spring closure | **MPL1099** |
| Lighthouse Powerhouse top isolation plate | **MPL6012** |
| Lighthouse/Lighthouse–SS breaker plate | **MPL1141** |
| Powerhouse/Powerhouse–SS breaker plate | **RV1112** |
| Lighthouse/Lighthouse–SS/Powerhouse/ Powerhouse–SS Hose and cable brackets | **MPL1087** |
| Lighthouse/Powerhouse stainless steel hinge | **MPL1088** |
| Lighthouse/Powerhouse complete pedestal base with busbar assembly | **MPL6004A** |
| Lighthouse/Powerhouse complete pedestal base with three-phase busbar assembly | **MPL6004FA** |
| Lighthouse/Powerhouse pedestal base without busbars | **MPL6004** |
| Lighthouse/Powerhouse aluminum blank access panel | **MPL5500** |
| Lighthouse/Lighthouse–SS/Powerhouse/ Powerhouse–SS complete busbar assembly | **MPL1140A** |
| Lighthouse/Lighthouse–SS/Powerhouse/Powerhouse–SS complete three-phase busbar assembly | **MPL1140FA** |
| Copper busbar with nuts and washers | **MPL3471** |
| 20 A GFCI—00 amber resin faceplate | **MPL1120** |
| 30 A—20 GFCI amber resin faceplate | **MPL1121** |
| 30–50 A amber resin faceplate | **MPL1122** |
| 30–30 A amber resin faceplate | **MPL1127** |
| 30–00 A amber resin faceplate | **MPL1129** |
| 50–50 A amber resin faceplate | **MPL1123** |
| 50 A—20 GFCI amber resin faceplate | **MPL1124** |
| 20 GFCI—20 GFCI amber resin faceplate | **MPL1125** |
| 00–00 amber resin faceplate | **MPL1126** |
| 50 A—00 amber resin faceplate | **MPL1128** |
| 100 A faceplate | **MPL1142** |
| 20 A GFCI—00 amber resin faceplate assembly with breakers | **MPL1120A** |
| 30 A—20 GFCI amber resin faceplate assembly with breakers | **MPL1121A** |
| 30–50 A amber resin faceplate assembly with breakers | **MPL1122A** |

## Replacement Parts Catalog Numbers, continued

| Description | Catalog Number |
|---|---|
| **Lighthouse, Lighthouse–SS, Powerhouse, Powerhouse–SS, continued** | |
| 30–30 A amber resin faceplate assembly with breakers | **MPL1127A** |
| 50–50 A amber resin faceplate assembly with breakers | **MPL1123A** |
| 50 A—20 GFCI amber resin faceplate assembly with breakers | **MPL1124A** |
| 20 GFCI—20 GFCI amber resin faceplate assembly with breakers | **MPL1125A** |
| 50 A—00 amber resin faceplate assembly with breakers | **MPL1128A** |
| 30–00 A faceplate assembly with breakers | **MPL1129A** |
| 100 A faceplate assembly with breakers | **MPL1142A** |
| Powerhouse 30–50 receptacle plate | **RV1143** |
| Powerhouse (30 A—00) receptacle plate | **RV11433** |
| Powerhouse (50 A—00) receptacle plate | **RV11435** |
| Powerhouse breaker plate | **RV1112** |
| **Phone, Cable, Internet Assemblies** | |
| Lighthouse/Powerhouse complete phone and cable assembly | **MPL1114/RV1114** |
| Lighthouse–SS/Powerhouse–SS/Hatteras Light/Park Light complete phone and cable assembly | **MPL1119/RV1119** |
| Hatteras Light/Park Light complete phone and cable assembly | **MPL1119** |
| Newport Harbor Mate/Camp Mate phone and cable insert assembly | **MPL1115/RV1115** |
| Lighthouse/Powerhouse access plates with dual Internet jacks | **MPL5501** |
| Coax cable TV FCF female adpt. with lugnut and washer | **MPL1086** |
| RJ45 CAT5e high-speed internet jack | **MPL3059** |
| Marine phone receptacle | **MPL3037** |
| RJ12 CAT3 phone jack | **RV3060** |
| **Water Assemblies** | |
| Lighthouse/Powerhouse complete water manifold assembly (dual 3/4-inch hose bibs with 1/4-turn ball valves) | **MPL11A** |
| Newport Harbor Mate/Newport Camp Mate water manifold assembly (dual 3/4-inch hose bibs with 1/4-turn ball valves) | **MPL11C** |
| 3/4-inch hose adapter | **MPL7030** |
| Lighthouse/Powerhouse water mounting plate with mounting brackets | **MPL1132** |
| Hatteras Light/Park Light aluminum water mounting plate | **MPL6584** |
| 1/2-inch brass silcock (hose bib) | **MPL7014** |
| 3/4-inch stainless steel silcock (hose bib) | **MPL5271** |
| 3/4-inch brass ball valve | **MPL7021** |
| Watts 3/4-inch backflow preventer | **MPL7015** |

## Replacement Parts Catalog Numbers, continued

| Description | Catalog Number |
|---|---|
| **Digital Electronic Meters** | |
| Single element, 14-pin quick disconnect (no CTs) | **MPL17A1** |
| Single element, 14-pin quick disconnect (with CTs) | **MPL17A2** ① |
| Single element, 14-pin quick disconnect (with CTs) | **MPL17A2** ② |
| Dual element, 14-pin quick disconnect (no CTs) | **MPL17B1** |
| Dual element, 14-pin quick disconnect (with CTs) | **MPL17B2** ① |
| Dual element, 14-pin quick disconnect (with CTs) | **MPL17B2** ② |
| Three element, 14-pin quick disconnect (no CTs) | **MPL17C1** |
| Three element, 14-pin quick disconnect (with CTs) | **MPL17C2** ① |
| Three element, 14-pin quick disconnect (with CTs) | **MPL17C2** ② |
| Single element coil transformers (CTs) | **MPL30321** ① |
| Single element coil transformers (CTs) | **MPL30321** ② |
| Dual element coil transformers (CTs) | **MPL30322** ① |
| Dual element coil transformers (CTs) | **MPL30322** ② |
| Three element coil transformers (CTs) | **MPL30323** ① |
| Three element coil transformers (CTs) | **MPL30323** ② |
| Counter (large—old style) | **MPL3022** |
| Counter (small—new style) | **MPL3021** |
| **Hatteras Light (Marina) and Park Light (RV)** ③ | |
| Pedestal main housing | **MPL6002** |
| Copper busbar with nuts and washers | **MPL3468** |
| Complete busbar assembly | **MPL1108A** |
| Complete three-phase busbar assembly | **MPL1108FA** |
| 20 A GFCI external cover door | **MPL1101** |
| 30 A external cover door | **MPL1102** |
| 50 A external cover door | **MPL1105** |
| Light fuse | **MPL3026** |
| Fuse holder | **MPL3027** |
| Mounting feet (set of four) | **MPL7004** |

***Notes***

① Lighthouse, Lighthouse–SS, Powerhouse, Powerhouse–SS.
② Hatteras Light, Park Light, Newport Camp Mate, Newport Harbor Mate.
③ Please contact factory to determine configurations for replacement housing.

## Replacement Parts Catalog Numbers, continued

| Description | Catalog Number |
|---|---|
| **Newport Harbor Mate (Marina) and Camp Mate (RV)** | |
| Amber lens—three-piece | **MPL1117** |
| Clear lens—three-piece | **MPL1109** |
| Main housing | **MPL6000** |
| Main door | **MPL6001** |
| 30–30 A faceplate ① | **MPL1135** |
| 30–50 A faceplate ① | **MPL1136** |
| 50–50 A faceplate ① | **MPL1137** |
| 50 A–00 faceplate ① | **MPL1138** |
| 30 A–00 faceplate ① | **MPL1139** |
| 30–30 A faceplate assembly with breakers ① | **MPL1135A** |
| 30–30–20 GFI faceplate assembly ① | **MPL1135G/RV1135G** |
| 30–50 A faceplate assembly with breakers ① | **MPL1136A** |
| 30–50–20 GFI faceplate assembly ① | **MPL1136G/RV1136G** |
| 50–50 A faceplate assembly with breakers ① | **MPL1137A** |
| 50–50–20 GFI faceplate assembly ① | **MPL1137G/RV1137G** |
| 50 A–00 faceplate assembly with breakers ① | **MPL1138A** |
| 50–20 GFI faceplate assembly ① | **MPL1138G/RV1138G** |
| 30 A–00 faceplate assembly with breakers ① | **MPL1139A** |
| 30–20 GFI faceplate assembly ① | **MPL1139G/RV1139G** |
| Mounting brackets | **MPL7005** |
| 36-inch stainless steel stand | **MPL5506** |
| Copper busbar with nuts and washers | **MPL3468** |
| Complete busbar assembly | **MPL1108A** |
| Complete three-phase busbar assembly | **MPL1108FA** |
| **Firehouse (Marina and RV)** | |
| Red strobe light/siren | **MPL3020** |
| Firehouse top with lighting assembly and strobe | **MPLFH6003A** |
| Light fuse | **MPL3029** |
| Fuse holder | **MPL3028** |
| Door | **MPL6013** |
| 24-inch life ring | **MPL4201** |
| Life ring bracket | **MPL4201B** |
| Blank access panel | **MPL6015** |
| Door/life ring switch (pre-2004) | **MPL3030** |
| Door/life ring switch (new) | **MPL3050** |
| Door hasp | **MPL3950** |
| Busbar (double barrel terminal block) | **MPL3751** |
| 10-lb ABC Type fire extinguisher | **MPL8025** |
| 20-lb ABC Type fire extinguisher | **MPL8025X** |

***Note***

① For custom faceplates to include phone/cable or other accessories, please contact Eaton's Marina Power & Lighting facility at 1-800-723-8009.

## Dimensions

Approximate Dimensions in Inches (mm)

### Firehouse–SS

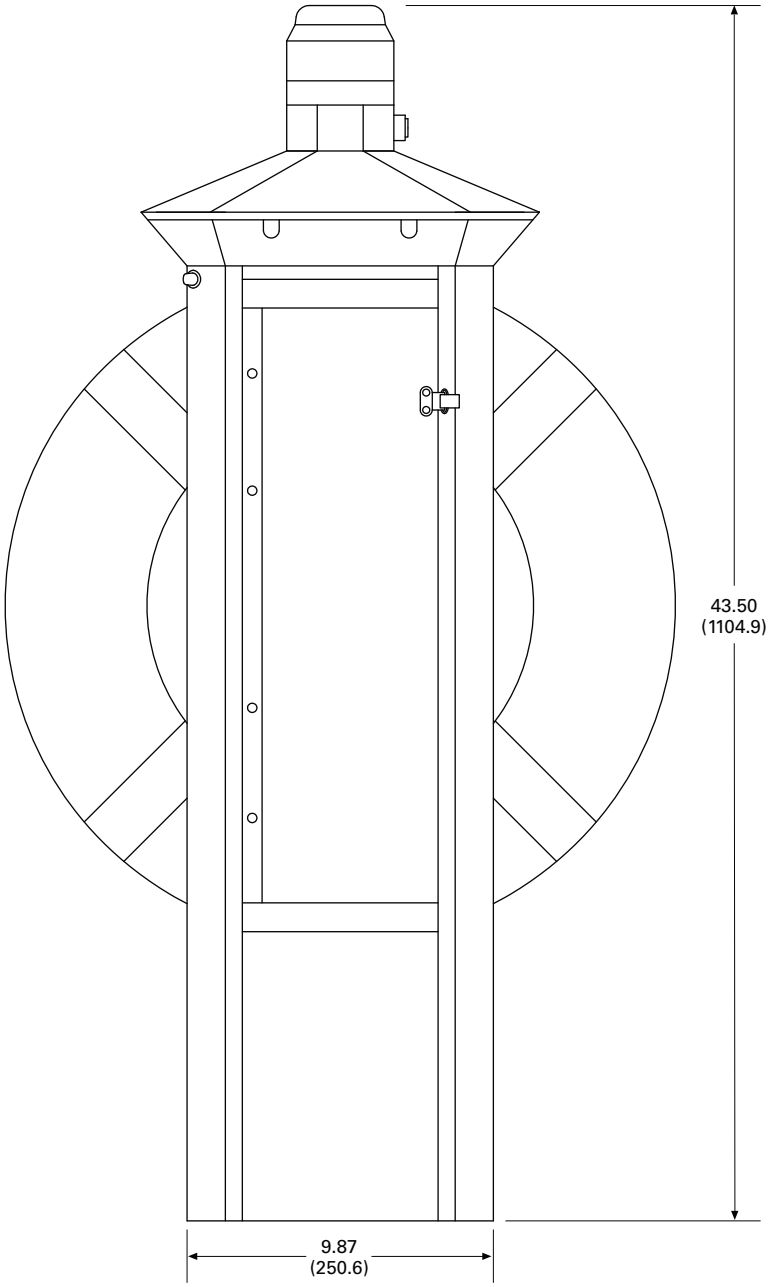

Smart Start

## Contents


| *Description* | *Page* |
|---|---|
| Power Pedestals | **V1-T5-51** |
| Lighthouse | **V1-T5-54** |
| Lighthouse–SS | **V1-T5-58** |
| Admiral–SS | **V1-T5-62** |
| Newport Harbor Mate | **V1-T5-65** |
| Hatteras Light | **V1-T5-69** |
| Firehouse | **V1-T5-73** |
| Smart Start | |
| Mariner | **V1-T5-80** |
| Digital Electronic Kilowatthour Meters | **V1-T5-81** |
| Distribution Equipment—Ground Fault Monitor | **V1-T5-82** |
| Distribution Equipment—Mega Yacht Powerpoint | **V1-T5-83** |
| Distribution Equipment—Substations | **V1-T5-86** |
| Distribution Equipment—Panels | **V1-T5-89** |
| Distribution Equipment—Transformers | **V1-T5-90** |




## Smart Start

### Product Description

If you have transient boat slips, Eaton Marina Power and Lighting has developed their newest product for your situation.

The new "Smart Start" pedestal is activated by the swipe of a credit card. A kiosk will be centrally located at the marina and will control up to 32 power pedestals. When a boater wants to use a slip, they will enter the slip number and amount of time they would like and will then be asked to swipe a card in order to activate the pedestal. Once the chosen time is up, the pedestal will shut down. No more free power!

The "Smart Start" pedestal will not only prevent transient boaters from stealing power, but it will also eliminate the need for 24-hour monitoring of the slips. Boaters will be able to come in at any time of the day and activate a pedestal.

### Features

- Lighted 316L stainless steel kiosk enclosure
- Programmable slip time blocks
- Programmable slip rates printable receipts

### Standards and Certifications

- UL listing pending

Listed

### Dimensions

Approximate Dimensions in Inches (mm)

**Smart Start**

| | |
|---|---|
| Height | 60.05 (1525.3) |
| Width | 14.15 (359.4) |
| Depth | 14.24 (361.9) |

**Marina Power and Lighting Equipment**

***Mariner***

## Contents


| *Description* | *Page* |
|---|---|
| Power Pedestals | **V1-T5-51** |
| Lighthouse | **V1-T5-54** |
| Lighthouse–SS | **V1-T5-58** |
| Admiral–SS | **V1-T5-62** |
| Newport Harbor Mate | **V1-T5-65** |
| Hatteras Light | **V1-T5-69** |
| Firehouse | **V1-T5-73** |
| Smart Start | **V1-T5-79** |
| Mariner | |
| Digital Electronic Kilowatthour Meters | **V1-T5-81** |
| Distribution Equipment—Ground Fault Monitor | **V1-T5-82** |
| Distribution Equipment—Mega Yacht Powerpoint | **V1-T5-83** |
| Distribution Equipment—Substations | **V1-T5-86** |
| Distribution Equipment—Panels | **V1-T5-89** |
| Distribution Equipment—Transformers | **V1-T5-90** |


## Mariner

### Product Description

The Mariner is a lighting bollard that can stand from 1.5 to 4 feet tall and can be used in various applications from marina docks, to landscaped areas, golf courses and beyond. The Mariner will have a lifetime warranty on the engineered resin housing that will withstand the harsh marine and land environments from Alaska to the tropics.

### Features

- Can be configured with a 7 watt, 9 watt or 13 watt fluorescent bulb
- Mounting base and painted pole supplied for desired height
- Limited lifetime warranty on engineered resin housing
- Custom colors available
- Side-mounted option

### Dimensions

Approximate Dimensions in Inches (mm)

**Mariner**

| | |
|---|---|
| 7 watt | 14.15 (359.4) |
| 9 watt/13 watt | 14.24 (361.9) |

**Mounting Base and Pole**

| |
|---|
| 1.5 feet–4 feet |

### Catalog Number Selection

**M 5 A R 18**

| Type |
|---|
| **M** = Mariner |

| Bulb Wattage |
|---|
| **5** = 5 W |
| **7** = 7 W |
| **9** = 9 W |
| **3** = 13 W |
| **1** = 50 MA LED |

| Color Lens |
|---|
| **A** = Amber |
| **C** = Clear |
| **S** = Special |

| Color |
|---|
| **W** = White |
| **R** = Blue |
| **B** = Black |
| **D** = Dark green |
| **S** = Special |

| Stand Height |
|---|
| **18** = 18-inch |
| **24** = 24-inch |
| **36** = 36-inch |
| **48** = 48-inch |

Digital Electronic Kilowatt Hour Meters

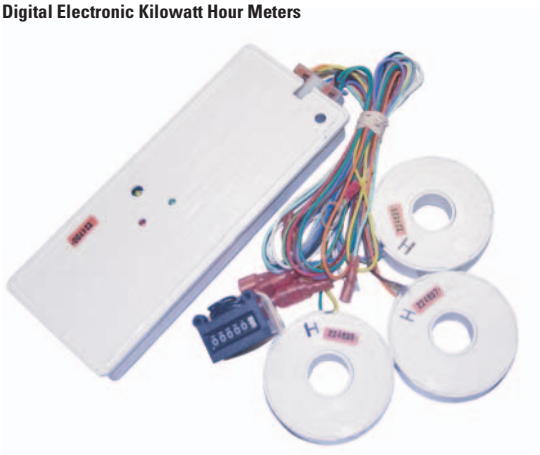

## Contents


| *Description* | *Page* |
|---|---|
| Power Pedestals | **V1-T5-51** |
| Lighthouse | **V1-T5-54** |
| Lighthouse–SS | **V1-T5-58** |
| Admiral–SS | **V1-T5-62** |
| Newport Harbor Mate | **V1-T5-65** |
| Hatteras Light | **V1-T5-69** |
| Firehouse | **V1-T5-73** |
| Smart Start | **V1-T5-79** |
| Mariner | **V1-T5-80** |
| Digital Electronic Kilowatthour Meters | |
| Distribution Equipment—Ground Fault Monitor | **V1-T5-82** |
| Distribution Equipment—Mega Yacht Powerpoint | **V1-T5-83** |
| Distribution Equipment—Substations | **V1-T5-86** |
| Distribution Equipment—Panels | **V1-T5-89** |
| Distribution Equipment—Transformers | **V1-T5-90** |




## Digital Electronic Kilowatthour Meters

### Product Description

Using the latest surface mount technology, Eaton manufactures a digital electronic kilowatthour meter that exceeds the +/– 2% accuracy required by ANSI (American National Standards Institute) C-12.1 and is approved by the state of California at +/– 1% over the full range of 0–100 A from a 0.5–1 power factor and is available for both single- and three-phase applications.

The meter drives an electro-mechanical counter that requires a 12 V pulse each tenth of a kilowatthour, providing 10 pulses per kilowatt used. The meter output can be hard wired or connected to a transmitter in the pedestal for wireless transmission to a receiver displaying the output on a PC for direct billing of up to 1,000 individual customers.

### Features

Our meter is designed to be user friendly in that all connections from external sources and the meter output are through one 14-pin locking connector. This feature eliminates many common problems, such as reverse line polarity and improper coil polarity. Simple LEDs, both red and green, indicate line and load condition and the pulsed LED indicates the rate of power consumption.

#### *Wireless System*

All of our meters are "wireless capable" to allow for wireless meter reading. This technology enables the marina or RV park to get meter readings from one central location rather than visiting every site to read the counters.

#### *Meter Socket Capabilities*

Meter sockets are available on the Lighthouse and Lighthouse–SS.

#### *Standard*

- Four jaw
- Ring-type
- 100 A

### Available Options

- 200 A (SS only)
- Lockable hasp
- Ringless (SS only)
- Five jaw
- Seven jaw (SS only)

### Product Selection

*One Element Meter*

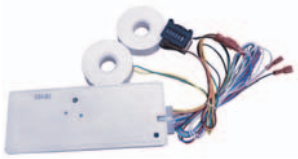

*Two Element Meter*

*Three Element Meter*

**Ground Fault Monitor**

## Contents


| *Description* | *Page* |
|---|---|
| Power Pedestals | **V1-T5-51** |
| Lighthouse | **V1-T5-54** |
| Lighthouse–SS | **V1-T5-58** |
| Admiral–SS | **V1-T5-62** |
| Newport Harbor Mate | **V1-T5-65** |
| Hatteras Light | **V1-T5-69** |
| Firehouse | **V1-T5-73** |
| Smart Start | **V1-T5-79** |
| Mariner | **V1-T5-80** |
| Digital Electronic Kilowatthour Meters | **V1-T5-81** |
| Distribution Equipment—Ground Fault Monitor | |
| Distribution Equipment—Mega Yacht Powerpoint | **V1-T5-83** |
| Distribution Equipment—Substations | **V1-T5-86** |
| Distribution Equipment—Panels | **V1-T5-89** |
| Distribution Equipment—Transformers | **V1-T5-90** |


## Distribution Equipment—Ground Fault Monitor

### Product Description

Our ground fault monitoring systems are designed to detect fault currents in the AC shore power system that are too low to trip a circuit breaker. The ground fault monitor helps reduce the risk of injury or property damage that may result from stray fault currents. Our ground fault monitoring system provides information to the maintenance staff on the overall condition of the AC electrical system. The ground fault monitoring system operates 24 hours a day and can be monitored by non-technical personnel.

### Features

- Adjustable trip level 10 mA to 10 A
- Current transformers up to 8 1/4-inch diameter
- Visual and/or audible alarm
- Housing of fiberglass or powder-coated stainless steel available

#### *Power Guard*

The ground fault monitor detects ground fault currents by means of current transformers (CT), which are placed around main or branch circuits. If a ground fault occurs, the CT will detect the amount of fault current and send a signal to the ground fault monitoring device where the amount of fault current is displayed with the faulty circuit identified. The detected fault can either activate an indicator alarm or disconnect the faulted circuit.

### Standards and Certifications

- UL listed current transformers

Listed

Marina Power and Lighting Equipment

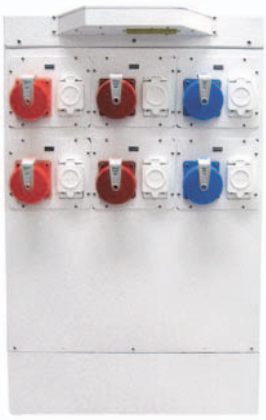

## Contents


| *Description* | *Page* |
|---|---|
| Power Pedestals | **V1-T5-51** |
| Lighthouse | **V1-T5-54** |
| Lighthouse–SS | **V1-T5-58** |
| Admiral–SS | **V1-T5-62** |
| Newport Harbor Mate | **V1-T5-65** |
| Hatteras Light | **V1-T5-69** |
| Firehouse | **V1-T5-73** |
| Smart Start | **V1-T5-79** |
| Mariner | **V1-T5-80** |
| Digital Electronic Kilowatthour Meters | **V1-T5-81** |
| Distribution Equipment—Ground Fault Monitor | **V1-T5-82** |
| Distribution Equipment—Mega Yacht Powerpoint | |
| Wiring Diagram | **V1-T5-84** |
| Dimensions | **V1-T5-85** |
| Distribution Equipment—Substations | **V1-T5-86** |
| Distribution Equipment—Panels | **V1-T5-89** |
| Distribution Equipment—Transformers | **V1-T5-90** |




## Distribution Equipment—Mega Yacht Powerpoint

### Product Description

From the company that is known for its high-quality innovations, Eaton is the only company to offer a self-contained dual-phase mega yacht unit. Made out of long-lasting stainless steel, this mega yacht unit has a copper-wound, low-noise transformer that is double insulated and epoxy overcoated.The mega yacht unit delivers both single-phase and three-phase power to serve most mega yachts. Helping to keep your marina environment tranquil, the mega yacht unit has a low-noise, highly efficient transformer that has isolation mounts to ensure a very quiet operation.

### Features

- Thermostatically controlled fans in transformer compartment for cooling
- Heavy stainless steel (316L) cabinet with a polyester powder coating
- Ventilated sun shields to help unit run cooler in tropical climates
- Limited lifetime warranty on housing
- Two or three light 13 watt photocell controlled fluorescent lights on the sun shield for optimal night lighting

### Available Options

- 200 A–480 V three-phase receptacles
- 100% rated breakers
- Hard wiring busbars for all voltages with breaker protection
- Two 3/4 inch water outlets with a water meter
- Two phone, two CATV and two CAT5 high-speed Internet connections
- Digital electronic meters on all receptacles
- Primary breaker
- Two 480 V delta or wye 125 A three-phase receptacles (IEC)
- Two 120/208 V 100 A three-phase receptacles (IEC)
- Two 120/240 V 100 A single-phase receptacles (IEC)
- Up to four 50 A 120/240 V locking receptacles (NEMA)
- Up to four 30 A 120 V locking receptacles (NEMA)
- Wireless remote metering for electric and water
- 20 A GFI receptacle
- Primary side 480 V maximum 600 A
- Secondary side single-phase 120/240 V maximum 100 kVA
- Secondary side three-phase 120/208 V maximum 125 kVA
- Fire extinguisher—10 or 20 lbs

## Wiring Diagram

### Powerpoint

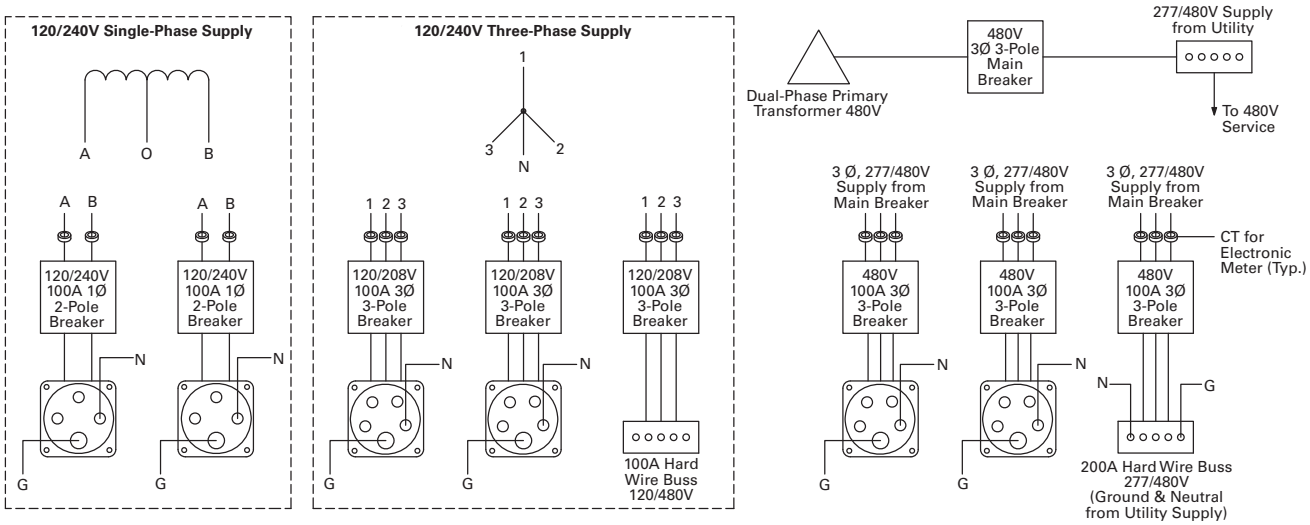

## Dimensions

Approximate Dimensions in Inches (mm)

### Powerpoint Unit

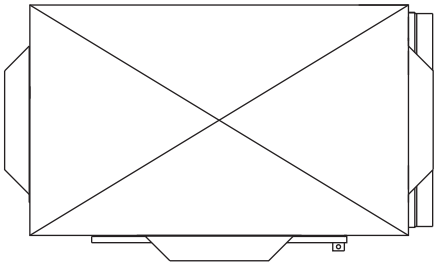

Top With Solar Shield

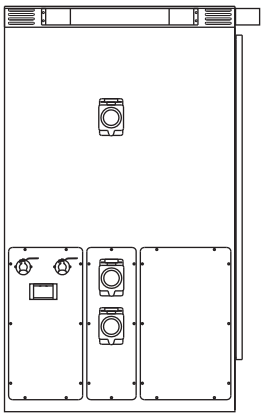

Left Side

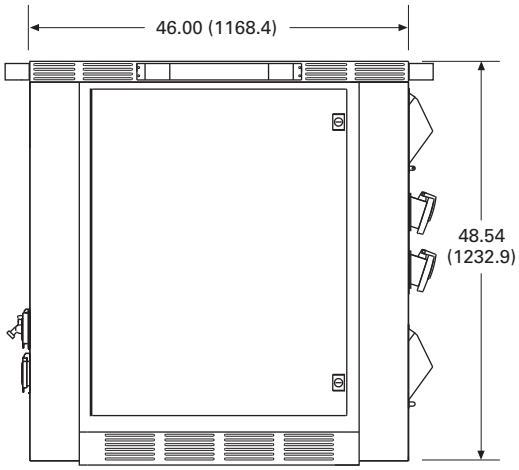


Front

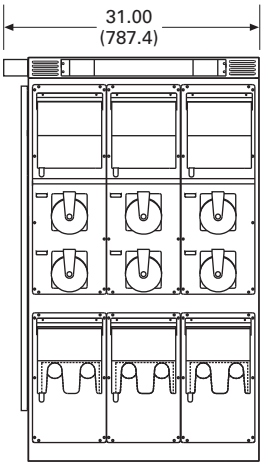


Right Side

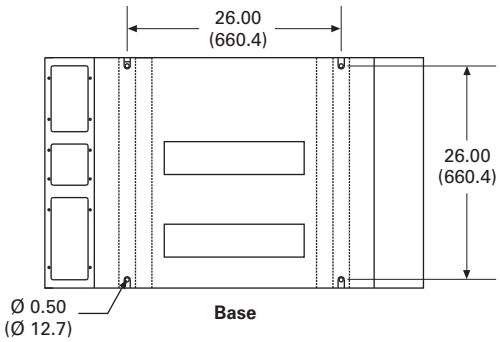


Base

**Substations**

*Double Panel Substation*

## Contents


| *Description* | *Page* |
|---|---|
| Power Pedestals | **V1-T5-51** |
| Lighthouse | **V1-T5-54** |
| Lighthouse–SS | **V1-T5-58** |
| Admiral–SS | **V1-T5-62** |
| Newport Harbor Mate | **V1-T5-65** |
| Hatteras Light | **V1-T5-69** |
| Firehouse | **V1-T5-73** |
| Smart Start | **V1-T5-79** |
| Mariner | **V1-T5-80** |
| Digital Electronic Kilowatthour Meters | **V1-T5-81** |
| Distribution Equipment—Ground Fault Monitor | **V1-T5-82** |
| Distribution Equipment—Mega Yacht Powerpoint | **V1-T5-83** |
| Distribution Equipment—Substations | |
| Features, Benefits and Functions | **V1-T5-87** |
| Available Options | **V1-T5-88** |
| Standards and Certifications | **V1-T5-88** |
| Dimensions | **V1-T5-88** |
| Distribution Equipment—Panels | **V1-T5-89** |
| Distribution Equipment—Transformers | **V1-T5-90** |


## Distribution Equipment—Substations

### Product Description

The introduction of substations into the marina and recreational vehicle market allows Eaton to be your complete marina and RV park electrical products supplier. We are able to assist in the design and layout of your marina or RV park electrical system from the primary service provider, to your power pedestal. Our substations are designed for any coastal or inland environment and are constructed of powder-coated stainless steel NEMA 3R housing cabinets. All substation cabinets come with our limited lifetime warranty. All of our substations use Eaton's panels and circuit breakers providing our customers the utmost in circuit protection and quality.

### Application Description

The aluminum and Galvaneal cabinets are recommended for inland applications. The substations can be configured with 50–330 kVA single-phase or three-phase copper wound transformers and up to 20 single-phase or 12 three-phase branch breakers. An optional three-sided double-wall cabinet is available that provides air flow between the panels. All substations come standard with temperature controlled cooling fans.

### Product Selection Guide

#### Panel and Transformer Combinations

| Panel | Transformer |
|---|---|
| **Single-Phase** | |
| 200 A | 50 kVA |
| 300 A | 75 kVA |
| 400 A | 100 kVA |
| 600 A | 150 kVA |
| 700 A | 167.5 kVA |
| 800 A | 200 kVA |
| 1000 A | 250 kVA |
| 1200 A | 330 kVA |
| **Three-Phase** | |
| 100 A | 45 kVA |
| 200 A | 75 kVA |
| 300 A | 112.5 kVA |
| 400 A | 150 kVA |
| 600 A | 225 kVA |
| 800 A | 300 kVA |

## Features, Benefits and Functions

- Limited lifetime warranty on the housing
- All stainless steel hardware
- Temperature controlled cooling fans in the transformer and circuit breaker compartments
- Lockable door

### *Ventilation*

The substation ventilation is designed to optimize air circulation over and around the transformers and through the panel compartment so that the substation operates at lower temperatures.

Substations come equipped with temperature controlled cooling fans for exhausting hot air from the cabinet and solar shield.

In addition, substations are available with a double-walled cabinet and solar shield, which allow for cooling of both the exterior surface of the cabinet and the internal components.

## Substations

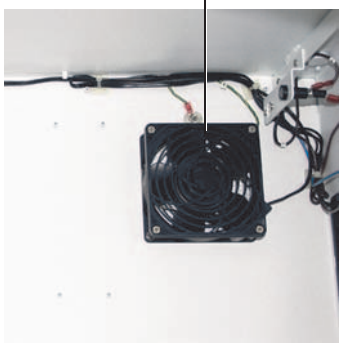


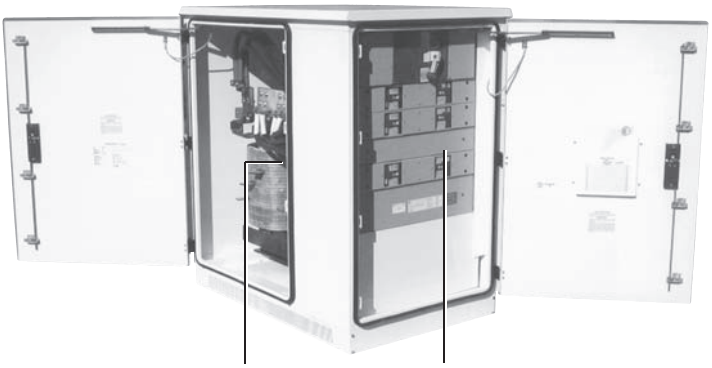


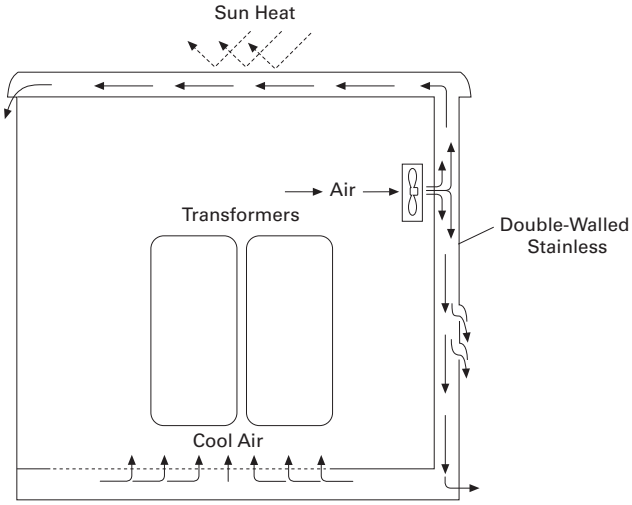


Double-Walled Construction

## Available Options

- Powder-coated cabinets made of stainless steel or fiberglass
- Limited lifetime warranty on housing. Transformer and secondary distribution panel in a single enclosure have a one-year limited warranty
- Stainless steel housing and hardware with locking doors
- Single-phase and three-phase models
- Overload capacity meets ANSI L57.96–01.250
- Optional double-walled construction
- Temperature controlled fans for cooling
- Custom-made copper wound single-phase or three-phase transformers from 50–330 kVA
- Up to 1200 A main circuit breaker with 15 single-phase branch circuit breakers or 10 three-phase branch circuit breakers
- Substations can be equipped with photocells to turn on and off lights
- A 20 A GFI can be installed in the cabinet, as well as a ground fault monitoring system

## Standards and Certifications

- cULus listed

C UL US
Listed

## Dimensions

Approximate Dimensions in Inches (mm)

**Substations**

| | |
|---|---|
| **Standard Substation** | |
| Height | 53.00 (1346.2) |
| Width | 51.00 (1295.4) |
| Depth | 33.00 (838.2) |
| **Side-by-Side Substation** | |
| Height | 53.00 (1346.2) |
| Width | 66.00 (1676.4) |
| Depth | 30.00 (762.0) |
| **Double Panel Substation** | |
| Height | 53.00 (1346.2) |
| Width | 63.00 (1600.2) |
| Depth | 33.00 (838.2) |

Panels

*Panel (Stainless Steel Shown)*

## Contents


| *Description* | *Page* |
|---|---|
| Power Pedestals | **V1-T5-51** |
| Lighthouse | **V1-T5-54** |
| Lighthouse–SS | **V1-T5-58** |
| Admiral–SS | **V1-T5-62** |
| Newport Harbor Mate | **V1-T5-65** |
| Hatteras Light | **V1-T5-69** |
| Firehouse | **V1-T5-73** |
| Smart Start | **V1-T5-79** |
| Mariner | **V1-T5-80** |
| Digital Electronic Kilowatthour Meters | **V1-T5-81** |
| Distribution Equipment—Ground Fault Monitor | **V1-T5-82** |
| Distribution Equipment—Mega Yacht Powerpoint | **V1-T5-83** |
| Distribution Equipment—Substations | **V1-T5-86** |
| Distribution Equipment—Panels | |
| Distribution Equipment—Transformers | **V1-T5-90** |




## Distribution Equipment—Panels

### Product Description

Two of the many products we can offer our customers are Eaton's PRL-3A and PRL-4 panels as standalone units or in one of our substations. All of our busses are made of copper and are load rated; breakers are bolt-on type. Distribution panels can be 120/240 V single-phase, 120/208 V three-phase, 277/480 V three-phase or 220Y/127 V three-phase based on your system requirements. Distribution panels can also have a main breaker or a main lug. Branch circuit breakers are provided based on customer requirements.

### Features

- All internal wiring is fine stranded 1000 V insulated copper
- Copper busbars
- All exterior hardware is stainless steel

### Available Options

- NEMA 3R or 4X
- Powder-coated stainless steel
- Main breaker up to 1200 A
- Branch breaker 20–1200 A
- Main lug only
- We also offer 480 V models—single-phase and three-phase

***Single-Phase***

- Up to 1200 A main circuit breakers
- Up to 42 branch circuit breakers

***Three-Phase***

- Up to 1200 A main circuit breakers
- Up to 42 branch circuit breakers

### Standards and Certifications

- UL listed
- cULus listed

UL Listed c UL Listed US

Transformers

*Three-Phase Transformer*

## Contents


| *Description* | *Page* |
|---|---|
| Power Pedestals | **V1-T5-51** |
| Lighthouse | **V1-T5-54** |
| Lighthouse–SS | **V1-T5-58** |
| Admiral–SS | **V1-T5-62** |
| Newport Harbor Mate | **V1-T5-65** |
| Hatteras Light | **V1-T5-69** |
| Firehouse | **V1-T5-73** |
| Smart Start | **V1-T5-79** |
| Mariner | **V1-T5-80** |
| Digital Electronic Kilowatthour Meters | **V1-T5-81** |
| Distribution Equipment—Ground Fault Monitor | **V1-T5-82** |
| Distribution Equipment—Mega Yacht Powerpoint | **V1-T5-83** |
| Distribution Equipment—Substations | **V1-T5-86** |
| Distribution Equipment—Panels | **V1-T5-89** |
| Distribution Equipment—Transformers | |


## Distribution Equipment—Transformers

### Product Description

Because of the high humidity and corrosive conditions of coastal environments, our transformers are wound with Class H heavily insulated copper bar and are double dipped in tough insulating varnish that protects the copper, as well as reduces the hum that is typical in a transformer that is not double dipped. We provide a second overcoat of high temperature epoxy to protect against the severe saltwater environment. We can provide this transformer in single-phase, from 50 to 500 kVA, and three-phase, from 45 to 300 kVA.

### Features

- Copper wound transformer coils double dipped in high temperature baking varnish
- All internal wiring is fine stranded 2000 V insulated copper
- Copper busbars
- Marine transformers with epoxy overcoat
- All copper-to-copper connections

### Available Options

- Single-phase: 50–500 kVA
- Three-phase: 45–300 kVA
- Epoxy overcoat for non-marine applications

***Primary Voltages***

- 480 wye three-phase
- 480 V three-phase delta three-wire + ground
- 480 V single-phase two-wire + ground

***Secondary Voltages***

- 127/220 V three-phase wye four-wire
- 120/208 V three-phase wye four-wire
- 120/240 V single-phase three-wire

***Marina Power Distribution Transformer kVA Availabilities***

- Single-phase: 50, 75, 100, 150, 167.5, 200, 250, 330, 500 kVA
- Three-phase: 45, 75, 112.5, 150, 225, 300 kVA

### Standards and Certifications

- cULus listed

c UL us Listed

Air Conditioning Disconnects

## 6.1 Air Conditioning Disconnects


Product Description . . . . . V1-T6-2
Application Description . . . . . V1-T6-2
Features, Benefits and Functions . . . . . V1-T6-3
Standards and Certifications . . . . . V1-T6-3
Product Selection . . . . . V1-T6-4
Cross-Reference . . . . . V1-T6-6
Technical Data and Specifications . . . . . V1-T6-7
Dimensions . . . . . V1-T6-7




Learn Online

# Air Conditioning Disconnects

Fused, Unfused and Molded Case Switch

*Complete Line of Fused, Unfused and Molded Case Switch Type Air Conditioning Disconnects*

## Contents


| *Description* | *Page* |
|---|---|
| Features, Benefits and Functions | **V1-T6-3** |
| Standards and Certifications | **V1-T6-3** |
| Product Selection | **V1-T6-4** |
| Cross-Reference | **V1-T6-6** |
| Technical Data and Specifications | **V1-T6-7** |
| Dimensions | **V1-T6-7** |




## Product Description

An air conditioning disconnect (ACD) is a disconnect located between a loadcenter (distribution panel) and air conditioner. Eaton's ACD product line provides an installer or repair personnel with a visible disconnecting means when performing maintenance. ACDs are also known as disconnects, pullouts or air conditioning switches.

Non-fused pullout and molded case switch devices provide personnel with a visible ON-OFF disconnecting means. While fused pullout units also perform this function, they also provide an additional level of protection for the air conditioner.

Fused and non-fused devices are of a pullout design, where the user physically removes or "pulls out" a tab to break the electrical connection. A molded case switch is similar to a light switch where the user "switches" the unit to the indicated ON-OFF position.

### Fused and Non-Fused Pullouts

- ON/OFF control provided by a pullout handle
- Pullout handle can be conveniently stored in the compartment in the OFF position, helping to prevent the handle from being misplaced
- Protective shield cannot be removed until the pullout handle is removed, disconnecting the power

### Molded Case Switch

- Rugged molded case construction in a disconnect switch that looks like a circuit breaker but operates like an ordinary household light switch
- Plug-in molded case switch (included) eliminates the need for pullout handles
- No need for replacement pullout handles due to loss or theft

## Application Description

The most widely used application for ACDs is for residential and light commercial air conditioning units. An ACD is installed outdoors, in visible proximity to the air conditioner condensing unit. ACDs are also found in use with heat pumps, swimming pools, spas, whirlpools and pump houses, and meet 2008 NEC Article 422.31 (B) requirements for servicing electric water heaters. Metallic enclosures are galvanized steel and are installed in various locations. Non-metallic enclosures are a plastic (polycarbonate) enclosure commonly used in coastal or salt-water areas.

## Features, Benefits and Functions

- Single-phase, two-wire, 240 Vac and three-phase, three-wire, 240 Vac
- NEMA 3R outdoor enclosures offered in metallic and non-metallic versions
- Easy-to-remove high-strength protective shield for easier wiring and mounting
- Easy-to-remove front cover (no screws or fasteners to remove)
- 1-inch knockouts on the bottom, back and side of unit
- Copper-rated line and load lugs that are easily accessible
- Ample wiring space for mounting with a stud gun (single keyhole, two- or three-point mounting)
- Fused devices are service entrance rated

**Note:** Fused non-metallic units require the addition of **GB4NM** ground bar to obtain a Service Entrance rating.

- Horsepower rated (10 hp maximum at 240 Vac)
- Padlockable door provision for safety and reduction of tampering
- Metallic enclosures are bottom entry and exit only
- Non-metallic enclosures have knockouts and a hub provision for top access
- Non-metallic enclosures have a single unit door and protective shield for installer convenience
- Non-metallic enclosures are durable and provide excellent resistance to climate changes
- Factory-installed tamper-resistant/weather-resistant receptacles are available as an option on some products

## Standards and Certifications

- UL listed File No. E132354, E143893, E196365

Contact Eaton for details and part numbers for CSA approved units.

## Product Selection

DPU222R

### Non-Fused Pullouts

| Main Ampere Rating | Maximum hp Rating 120 V | 240 V | Wire Size Range Cu/Al 60 °C or 75 °C | Catalog Number |
|---|---|---|---|---|
| **Galvanized Steel** | | | | |
| 60 | — | 10 | #14–3 | **DPU222R** ① |
| **Non-Metallic/Polycarbonate Enclosure** | | | | |
| 60 | — | 10 | #14–2 | **ACD222URNM-A2** ① |

DPF222R

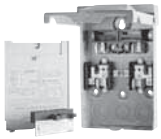

### Fused Pullouts

| Main Ampere Rating | Maximum hp Rating 120 V | 240 V | Wire Size Range Cu/Al 60 °C or 75 °C | Catalog Number |
|---|---|---|---|---|
| **Galvanized Steel** | | | | |
| 30 ② | 2 | 3 | #14–3 | **DPF221R** ① |
| 60 ② | 3 | 10 | #14–3 | **DPF222R** ① |
| **Non-Metallic** | | | | |
| 30 | 2 | 3 | #14–2 | **ACD221RNM-A2** ① |
| 60 | 3 | 10 | #14–2 | **ACD222RNM-A2** ① |

For Service Entrance applications, see footnotes below.

DPB222R

### Molded Case Switch

| Main Ampere Rating | Maximum hp Rating 120 V | 240 V | Wire Size Range Cu/Al 60 °C or 75 °C | Catalog Number |
|---|---|---|---|---|
| **Galvanized Steel** | | | | |
| 60 | — | 10 | #14–3 | **DPB222R** ③ |
| **Non-Metallic/Polycarbonate Enclosure** | | | | |
| 60 | — | 10 | #14–2 | **B60NARNM-A2** ③ |

***Notes***

① For replacement pullout head, order part number **96-3258-4**.
② To obtain a Service Entrance Rating, the addition of a **DPFG** (ground bar kit) is required.
③ For replacement molded case switch, order part number **BR260NA**.

DPU222RGF20

## ACD with 20 Ampere Ground Fault Receptacle ①

| Main Ampere Rating | Maximum hp Rating 120 V | 240 V | Wire Size Range Cu/Al 60 °C or 75 °C | Catalog Number |
|---|---|---|---|---|
| **Non-Fused Pullouts** | | | | |
| 60 | — | 10 | #14–3 | **DPU222RGF20WRTR** ② |
| 60 | — | 10 | #14–3 | **DPU222RGF20** |
| **Fused Pullouts** | | | | |
| 30 | 2 | 3 | #14–3 | **DPF221RGF20WRTR** ② |
| 30 | 2 | 3 | #14–3 | **DPF221RGF20** |
| 60 | 3 | 10 | #14–3 | **DPF222RGF20WRTR** ② |
| 60 | 3 | 10 | #14–3 | **DPF222RGF20** |

DPU222RGF15

## ACD with 15 Ampere Ground Fault Receptacle ①③

| Main Ampere Rating | Maximum hp Rating 120 V | 240 V | Wire Size Range Cu/Al 60 °C or 75 °C | Catalog Number |
|---|---|---|---|---|
| **Non-Fused Pullouts** | | | | |
| 60 | — | 10 | #14–3 | **DPU222RGF15** |
| 60 | — | 10 | #14–3 | **DPU222RGF15WRTR** ② |
| **Fused Pullouts** | | | | |
| 30 | 2 | 3 | #14–3 | **DPF221RGF15** |
| 30 | 2 | 3 | #14–3 | **DPF221RGF15WRTR** ② |
| 60 | 3 | 10 | #14–3 | **DPF222RGF15** |
| 60 | 3 | 10 | #14–3 | **DPF222RGF15WRTR** ② |

***Notes***

① Factory-installed GFCI receptacle.
② Includes weather-resistant/tamper-resistant receptacles to meet 2008 NEC Article 406.8 (A) and 406.11 requirements.
③ NEC permits the maximum receptacle rating of a 15 A circuit to be 15 A.

DPU362A

### Three-Phase Non-Fused ACD

| Main Ampere Rating | Maximum hp Rating 240 V | 480 V | Wire Size Range Cu 75 °C | Catalog Number |
|---|---|---|---|---|
| 60 | 15 | 30 | #14–4 | **DPU362RA** |



## Cross-Reference

### Cross-Reference

| Description | Catalog Number Eaton | Square D® | GE® | Siemens® (Murray®) | Milbank | Midwest |
|---|---|---|---|---|---|---|
| **Metallic/Galvanized Steel Enclosure** | | | | | | |
| 30 A fused | **DPF221R** | — | TF30R | WF2030 | U3830 | U035F2 |
| 60 A fused | **DPF222R** | — | TF60R | WF2060 | U3860 | U065F1 |
| 60 A non-fused | **DPU222R** | — | TFN60R | — | U3800 | U065P010 |
| 60 A non-fused compact design | **DPU222R** | — | — | WNFC2060 | — | — |
| 60 A molded case switch | **DPB222R** | QO200TR | TNA60R1 | WNAS2060 | — | U065NA1 |
| 60 A non-fused with ground fault receptacle | **DPU222RGF** | — | TFN60RGFR | WN2060GFCI | U3822-20GR | U065P010 |
| 30 A fused with ground fault receptacle | **DPF221RGF** | — | — | WF2030GFCI | — | U035F010 |
| 60 A fused with ground fault receptacle | **DPF222RGF** | — | — | WF2060GFCI | — | U065F010 |
| 60 A non-fused with 1/2-inch wire harness | **DPU222R12W** ① | — | — | — | — | — |
| 60 A non-fused with 3/4-inch wire harness | **DPU222R34W** ① | — | — | — | — | — |
| 60 A three-phase 600 V molded case switch | **DPU362RA** | — | — | — | — | U0653F |
| **Non-Metallic/Polycarbonate Enclosure** | | | | | | |
| 30 A fused | **ACD221RNM-A2** | — | TPF30R | WF2030PL | — | P035F |
| 60 A fused | **ACD222RNM-A2** | — | TPF60R | WF2060PL | — | P065F |
| 60 A non-fused | **ACD222URNM-A2** | — | TPN60R1 | WN2060PL | — | P065P1 |
| 60 A molded case switch | **B60NARNM-A2** | QO200TRNM | TPNA60R1 | WNAS2060PL | — | P065NA1 |
| 30 A fused with 15 A ground fault receptacle | **DPF221RGF15WRTR** | — | — | — | — | — |
| 30 A fused with 20 A ground fault receptacle | **DPF221RGF20WRTR** | — | — | — | — | — |
| 60 A fused with 15 A ground fault receptacle | **DPF222RGF15WRTR** | — | — | — | — | — |
| 60 A fused with 20 A ground fault receptacle | **DPF222RGF20WRTR** | — | — | — | — | — |
| 60 A non-fused with 15 A ground fault receptacle | **DPU222RGF15WRTR** | — | — | — | — | — |
| 60 A non-fused with 20 A ground fault receptacle | **DPU222RGF20WRTR** | — | — | — | U3822-20GWR | — |

***Note***

① Eaton Quick Pro℠ designated item.

## Technical Data and Specifications

- 10,000 amperes rms symmetrical interrupting rating
- Horsepower rated
- Fusible and non-fusible pullout and molded case switch designs
- 30 and 60 amperes available in fusible
- 60 amperes available in non-fusible and molded case switch
- Class H fuse clips provided on fusible pullout design
- WRTR (weather-resistant/ tamper-resistant) receptacle options available



## Dimensions

Approximate Dimensions in Inches (mm)

### Dimensions and Shipping Carton Information

| Catalog Number | Carton Quantity | Dimensions in Inches (mm) Height | Width | Depth | Weight Lbs (kg) |
|---|---|---|---|---|---|
| **Metallic/Galvanized Steel Enclosure** | | | | | |
| **DPF221R** | 10 | 8.70 (220.9) | 5.40 (137.2) | 3.15 (80.0) | 27 (12) |
| **DPF222R** | 10 | 8.70 (220.9) | 5.40 (137.2) | 3.15 (80.0) | 27 (12) |
| **DPU222R** | 10 | 8.70 (220.9) | 5.40 (137.2) | 3.15 (80.0) | 27 (12) |
| **DPB222R** | 10 | 8.60 (218.4) | 5.30 (134.6) | 3.74 (95.0) | 34 (15) |
| **DPU222R12W** ① | 1 | 14.75 (374.6) | 12.50 (317.5) | 4.00 (101.6) | 6 (3) |
| **DPU222R34W** ① | 1 | 14.75 (374.6) | 12.50 (317.5) | 4.00 (101.7) | 6 (3) |
| **DPU222RGF20** | 1 | 13.00 (330.2) | 7.50 (190.5) | 4.75 (120.7) | 8 (4) |
| **DPF221RGF20** | 1 | 13.00 (330.2) | 7.50 (190.5) | 4.75 (120.7) | 8 (4) |
| **DPF222RGF20** | 1 | 13.00 (330.2) | 7.50 (190.5) | 4.75 (120.7) | 8 (4) |
| **DPU222RGF15** | 1 | 13.00 (330.2) | 7.50 (190.5) | 4.75 (120.7) | 8 (4) |
| **DPF221RGF15** | 1 | 13.00 (330.2) | 7.50 (190.5) | 4.75 (120.7) | 8 (4) |
| **DPF222RGF15** | 1 | 13.00 (330.2) | 7.50 (190.5) | 4.75 (120.7) | 8 (4) |
| **DPF221RGF15WRTR** | 1 | 13.00 (330.2) | 7.50 (190.5) | 4.75 (120.7) | 8 (4) |
| **DPF221RGF20WRTR** | 1 | 13.00 (330.2) | 7.50 (190.5) | 4.75 (120.7) | 8 (4) |
| **DPF222RGF15WRTR** | 1 | 13.00 (330.2) | 7.50 (190.5) | 4.75 (120.7) | 8 (4) |
| **DPF222RGF20WRTR** | 1 | 13.00 (330.2) | 7.50 (190.5) | 4.75 (120.7) | 8 (4) |
| **DPU222RGF15WRTR** | 1 | 13.00 (330.2) | 7.50 (190.5) | 4.75 (120.7) | 8 (4) |
| **DPU222RGF20WRTR** | 1 | 13.00 (330.2) | 7.50 (190.5) | 4.75 (120.7) | 8 (4) |
| **DPU362R** | 1 | 8.60 (218.4) | 5.30 (134.6) | 3.74 (94.9) | 4 (2) |
| **Non-Metallic/Polycarbonate Enclosure** | | | | | |
| **ACD221RNM-A2** | 10 | 8.63 (219.0) | 6.26 (159.0) | 4.33 (109.9) | 15 (7) |
| **ACD222RNM-A2** | 10 | 8.63 (219.0) | 6.26 (159.0) | 4.33 (109.9) | 15 (7) |
| **ACD222URNM-A2** | 10 | 8.63 (219.0) | 6.26 (159.0) | 4.33 (109.9) | 15 (7) |
| **B60NARNM-A2** | 10 | 8.63 (219.0) | 6.26 (159.0) | 4.33 (109.9) | 18 (8) |

***Note***

① Eaton Quick Pro designated item.

Approximate Dimensions in Inches (mm)

### DPF221R, DPF222R, DPU222R, DPU222R12W and DPU222R34W

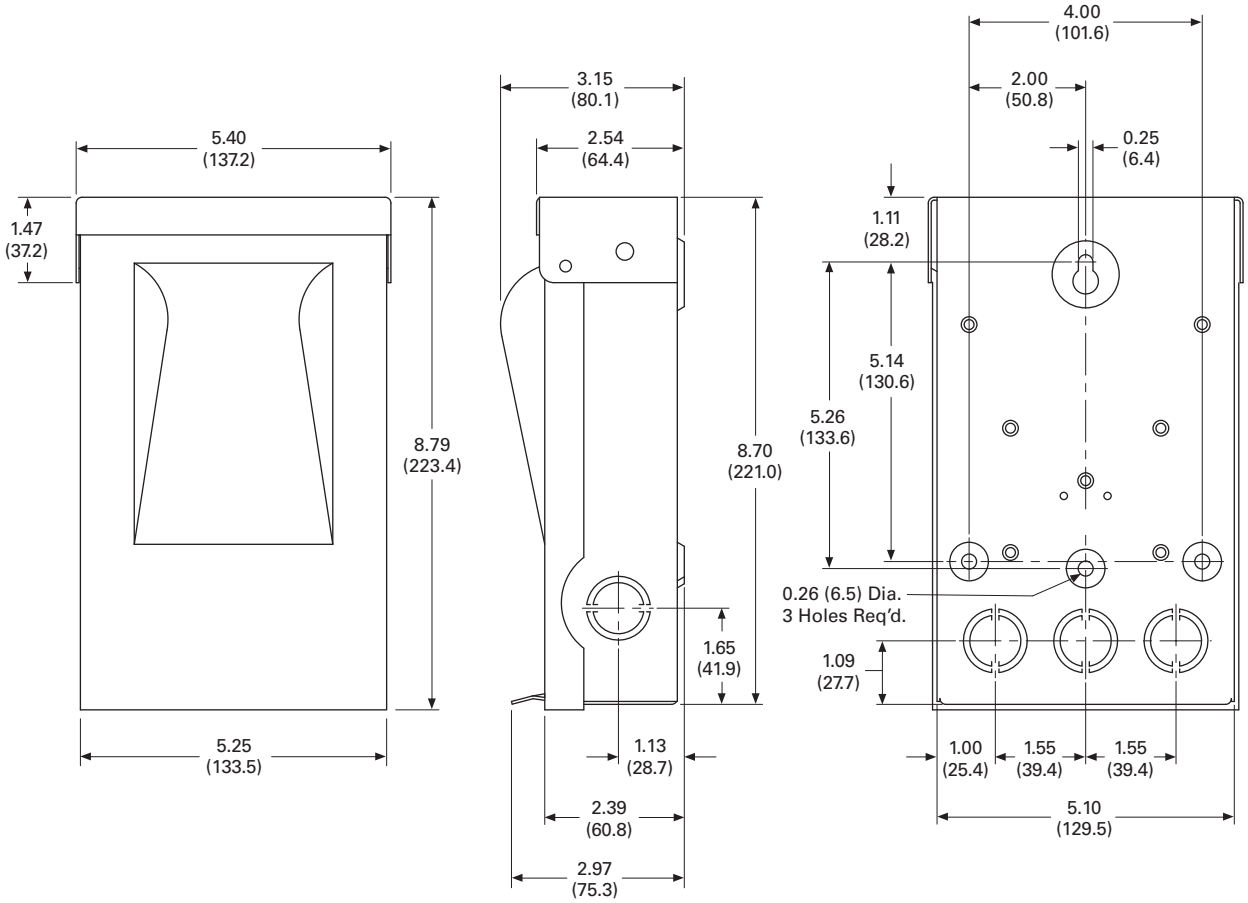


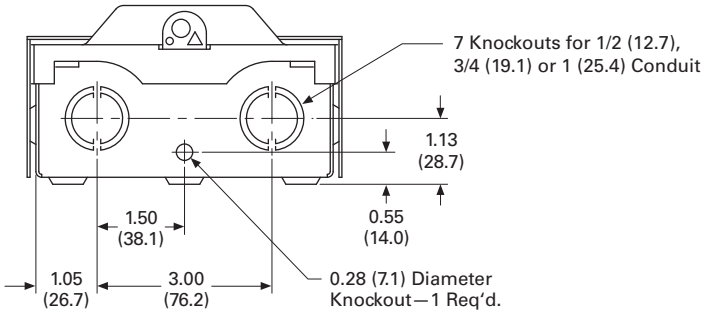

Approximate Dimensions in Inches (mm)

### ACD221RNM-A2, ACD222RNM-A2, ACD222URNM-A2 and B60NARNM-A2

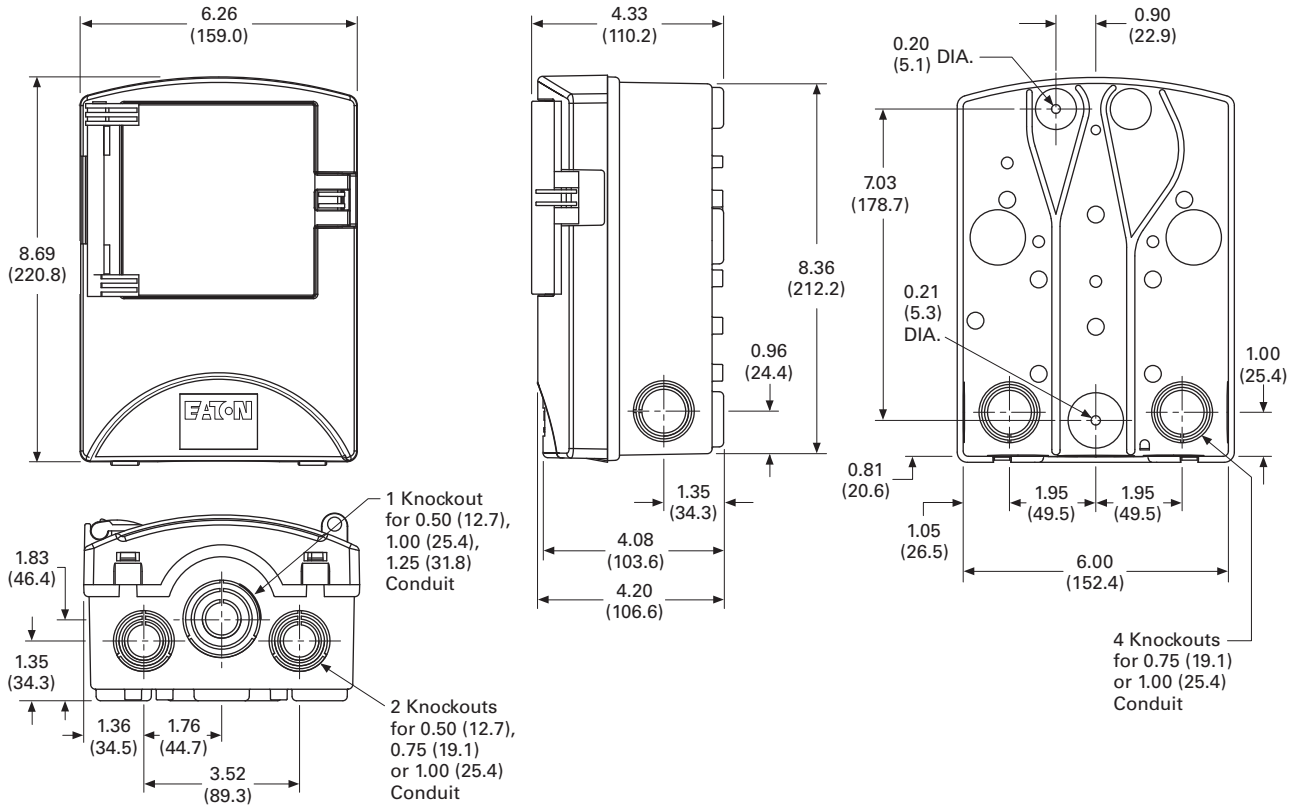


### DPB222R and DPU362A

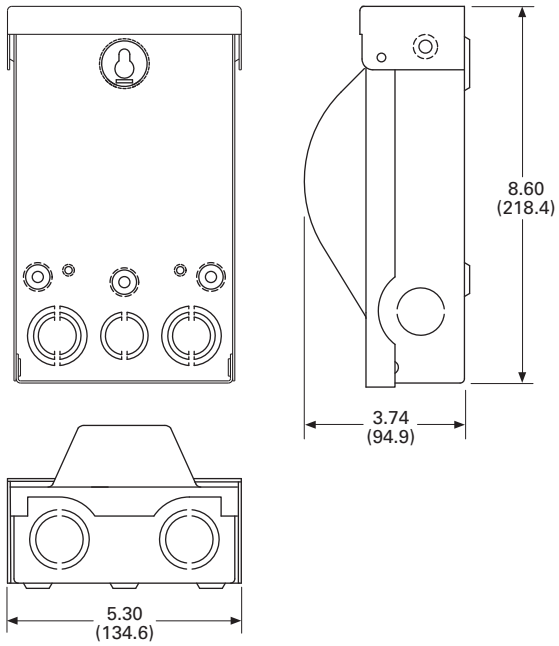

Approximate Dimensions in Inches (mm)

**DPU222RGF20, DPF221RGF20, DPF222RGF20, DPU222RGF15, DPF221RGF15, DPF222RGF15, DPF221RGF15WRTR, DPF221RGF20WRTR, DPF222RGF15WRTR, DPF222RGF20WRTR, DPU222RGF15WRTR and DPU222RGF20WRTR**

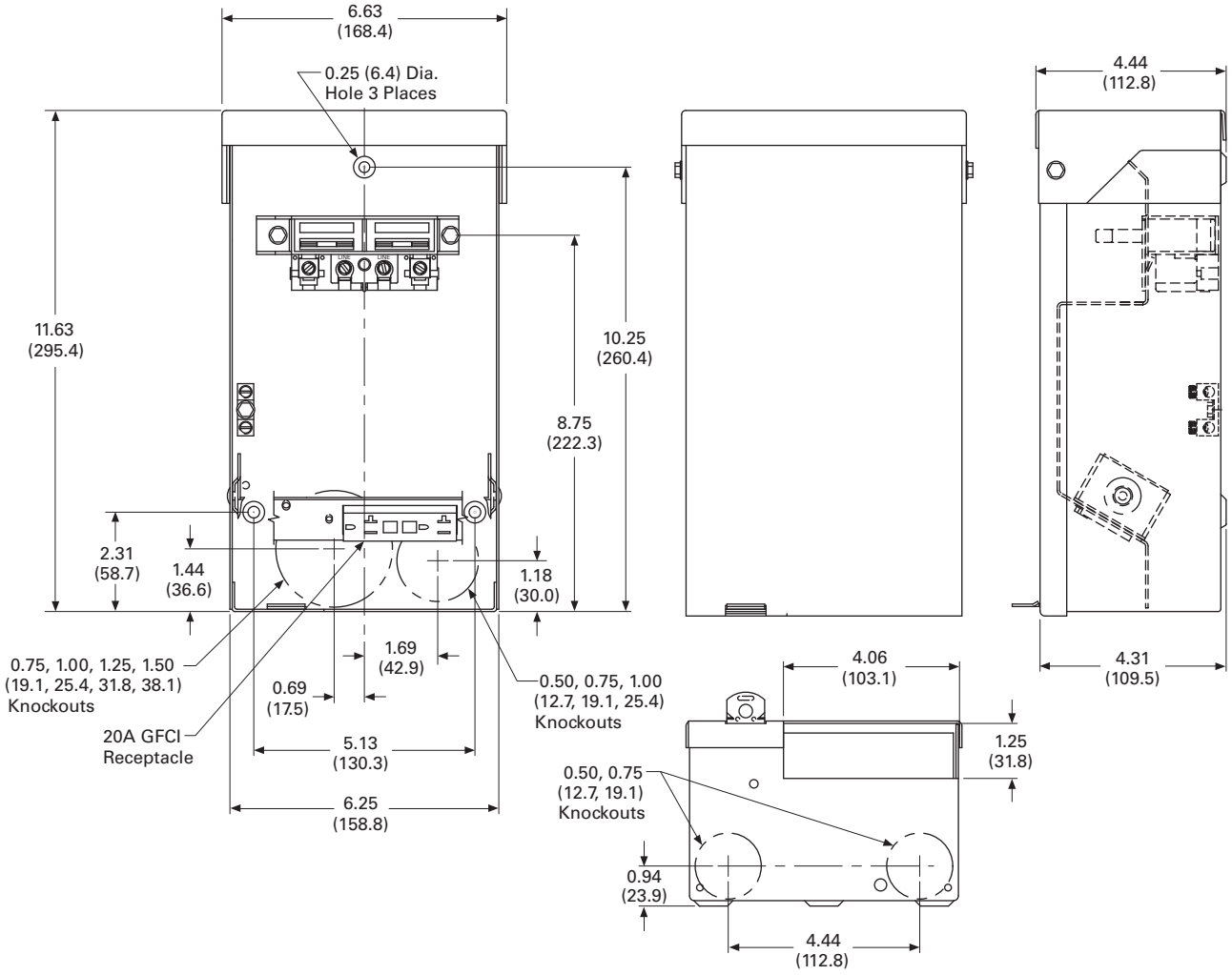

Effective Date: November 1, 2008

Eaton Terms & Conditions

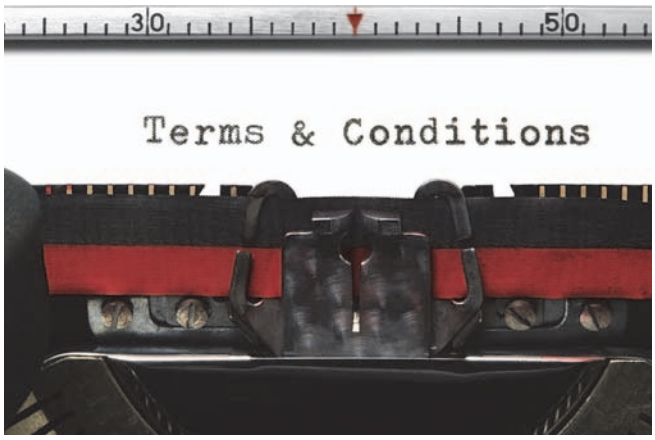


## Contents


| *Description* | *Page* |
|---|---|
| Terms and Conditions of Sale | **V1-A1-1** |
| Terms of Payment | **V1-A1-2** |
| Freight | **V1-A1-3** |
| Warranty | **V1-A1-3** |


## Selling Policy (Supersedes Selling Policy 25-000, dated February 20, 2006)

### Terms and Conditions of Sale

The Terms and Conditions of Sale set forth herein, and any supplements which may be attached hereto, constitute the full and final expression of the contract for the sale of products or services (hereinafter referred to as Product(s) or Services by Eaton Corporation (hereinafter referred to as Seller) to the Buyer, and supersedes all prior quotations, purchase orders, correspondence or communications whether written or oral between the Seller and the Buyer. Notwithstanding any contrary language in the Buyer's purchase order, correspondence or other form of acknowledgment, Buyer shall be bound by these Terms and Conditions of Sale when it sends a purchase order or otherwise indicates acceptance of this contract, or when it accepts delivery from Seller of the Products or Services.

THE CONTRACT FOR SALE OF THE PRODUCTS OR SERVICES IS EXPRESSLY LIMITED TO THE TERMS AND CONDITIONS OF SALE STATED HEREIN. ANY ADDITIONAL OR DIFFERENT TERMS PROPOSED BY BUYER ARE REJECTED UNLESS EXPRESSLY AGREED TO IN WRITING BY SELLER. No contract shall exist except as herein provided.

#### *Complete Agreement*

No amendment or modification hereto nor any statement, representation or warranty not contained herein shall be binding on the Seller unless made in writing by an authorized representative of the Seller. Prior dealings, usage of the trade or a course of performance shall not be relevant to determine the meaning of this contract even though the accepting or acquiescing party had knowledge of the nature of the performance and opportunity for objection.

#### *Quotations*

Written quotations are valid for 30 days from its date unless otherwise stated in the quotation or terminated sooner by notice.

Verbal quotations, unless accepted, expire the same day they are made.

A complete signed order must be received by Seller within 20 calendar days of notification of award, otherwise the price and shipment will be subject to re-negotiation.

#### *Termination and Cancellation*

Any order may be terminated by the Buyer only by written notice and upon payment of reasonable termination charges, including all costs plus profit.

Seller shall have the right to cancel any order at any time by written notice if Buyer breaches any of the terms hereof, becomes the subject of any proceeding under state or federal law for the relief of debtors, or otherwise becomes insolvent or bankrupt, generally does not pay its debts as they become due or makes an assignment for the benefit of creditors.

# Appendix 1—Eaton Terms & Conditions

Effective Date: November 1, 2008

***Prices***

All prices are subject to change without notice. In the event of a price change, the effective date of the change will be the date of the new price or discount sheet, letter or telegram. All quotations made or orders accepted after the effective date will be on the new basis. For existing orders, the price of the unshipped portion of an order will be the price in effect at time of shipment.

***Price Policy—Products and Services***

When prices are quoted as firm for quoted shipment, they are firm provided the following conditions are met:

1. The order is released with complete engineering details.
2. Shipment of Products are made, and Services purchased are provided within the quoted lead time.
3. When drawings for approval are required for any Products, the drawings applicable to those Products must be returned within 30* calendar days from the date of the original mailing of the drawings by Seller. The return drawings must be released for manufacture and shipment and must be marked "APPROVED" or "APPROVED AS NOTED." Drawing re-submittals which are required for any other reason than to correct Seller errors will not extend the 30-day period.

   * 60 days for orders through contractors to allow time for their review and approval before and after transmitting them to their customers.

If the Buyer initiates or in any way causes delays in shipment, provision of Services or return of approval drawings beyond the periods stated above, the price of the Products or Services will be increased 1% per month or fraction thereof up to a maximum of 18 months from the date of the Buyer's order. For delays resulting in shipment or provision of Services beyond 18 months from the date of the Buyer's order, the price must be renegotiated.

***Price Policy—BLS***

Refer to Price Policy 25-050.

***Minimum Billing***

Orders less than $1,000 will be assessed a shipping and handling charge of 5% of the price of the order, with a minimum charge of $25.00 unless noted differently on Product discount sheets.

***Taxes***

The price does not include any taxes. Buyer shall be responsible for the payment of all taxes applicable to, or arising from the transaction, the Products, its sale, value, or use, or any Services performed in connection therewith regardless of the person or entity actually taxed.

## Terms of Payment

***Products***

Acceptance of all orders is subject to the Buyer meeting Seller's credit requirements. Terms of payment are subject to change for failure to meet such requirements. Seller reserves the right at any time to demand full or partial payment before proceeding with a contract of sale as a result of changes in the financial condition of the Buyer. Terms of Payment are either Net 30 days from the date of invoice of each shipment or carry a cash discount based on Product type. Specific payment terms for Products are outlined in the applicable Product discount schedules.

***Services***

Terms of payment are net within 30 days from date of invoice for orders amounting to less than $50,000.00.

Terms of payment for orders exceeding $50,000.00 shall be made according to the following:

1. Twenty percent (20%) of order value with the purchase order payable 30 days from date of invoice.
2. Eighty percent (80%) of order value in equal monthly payments over the performance period payable 30 days from date of invoice.

Except for work performed (i) under a firm fixed price basis or (ii) pursuant to terms of a previously priced existing contract between Seller and Buyer, invoices for work performed by Seller shall have added and noted on each invoice a charge of 3% (over and above the price of the work) which is related to Seller compliance with present and proposed environmental, health, and safety regulations associated with prescribed requirements covering hazardous materials management and employee training, communications, personal protective equipment, documentation and record keeping associated therewith.

***Adequate Assurances***

If, in the judgment of Seller, the financial condition of the Buyer, at any time during the period of the contract, does not justify the terms of payment specified, Seller may require full or partial payment in advance.

***Delayed Payment***

If payments are not made in accordance with these terms, a service charge will, without prejudice to the right of Seller to immediate payment, be added in an amount equal to the lower of 1.5% per month or fraction thereof or the highest legal rate on the unpaid balance.

## Freight

Freight policy will be listed on the Product discount sheets, or at option of Seller one of the following freight terms will be quoted.

### *F.O.B.—P/S—Frt./Ppd. and Invoiced*

Products are sold F.O.B. point of shipment freight prepaid and invoiced to the Buyer.

### *F.O.B.—P/S—Frt./Ppd. and Allowed*

Products sold are delivered F.O.B. point of shipment, freight prepaid and included in the price.

### *F.O.B. Destination—Frt./Ppd. and Allowed*

At Buyer's option, Seller will deliver the Products F.O.B. destination freight prepaid and 2% will be added to the net price.

The term "freight prepaid" means that freight charges will be prepaid to the accessible common carrier delivery point nearest the destination for shipments within the United States and Puerto Rico unless noted differently on the Product discount sheets. For any other destination contact Seller's representative.

### *Shipment and Routing*

Seller shall select the point of origin of shipment, the method of transportation, the type of carrier equipment and the routing of the shipment.

If the Buyer specifies a special method of transportation, type of carrier equipment, routing, or delivery requirement, Buyer shall pay all special freight and handling charges.

When freight is included in the price, no allowance will be made in lieu of transportation if the Buyer accepts shipment at factory, warehouse, or freight station or otherwise supplies its own transportation.

### *Risk of Loss*

Risk of loss or damage to the Products shall pass to Buyer at the F.O.B. point.

### *Concealed Damage*

Except in the event of F.O.B. destination shipments, Seller will not participate in any settlement of claims for concealed damage.

When shipment has been made on an F.O.B. destination basis, the Buyer must unpack immediately and, if damage is discovered must:

1. Not move the Products from the point of examination.
2. Retain shipping container and packing material.
3. Notify the carrier in writing of any apparent damage.
4. Notify Seller representative within 72 hours of delivery.
5. Send Seller a copy of the carrier's inspection report.

### *Witness Tests/Customer Inspection*

Standard factory tests may be witnessed by the Buyer at Seller's factory for an additional charge calculated at the rate of $2,500 per day (not to exceed eight (8) hours) per Product type. Buyer may final inspect Products at the Seller's factory for $500 per day per Product type.

Witness tests will add one (1) week to the scheduled shipping date. Seller will notify Buyer fourteen (14) calendar days prior to scheduled witness testing or inspection. In the event Buyer is unable to attend, the Parties shall mutually agree on a rescheduled date. However, Seller reserves the right to deem the witness tests waived with the right to ship and invoice Products.

### *Held Orders*

For any order held, delayed or rescheduled at the request of the Buyer, Seller may, at its sole option (1) require payment to be based on any reasonable basis, including but not limited to the contract price, and any additional expenses, or cost resulting from such a delay; (2) store Products at the sole cost and risk of loss of the Buyer; and/or (3) charge to the Buyer those prices under the applicable price policy. Payment for such price, expenses and costs, in any such event, shall be due by Buyer within thirty (30) days from date of Seller's invoice. Any order so held delayed or rescheduled beyond six (6) months will be treated as a Buyer termination.

### *Drawing Approval*

Seller will design the Products in line with, in Seller's judgment, good commercial practice. If at drawing approval Buyer makes changes outside of the design as covered in their specifications, Seller will then be paid reasonable charges and allowed a commensurate delay in shipping date based on the changes made.

### *Drawing Re-Submittal*

When Seller agrees to do so in its quotation, Seller shall provide Buyer with the first set of factory customer approval drawing(s) at Seller's expense. The customer approval drawing(s) will be delivered at the quoted delivery date. If Buyer requests drawing changes or additions after the initial factory customer approval drawing(s) have been submitted by Seller, the Seller, at its option, may assess Buyer drawing charges. Factory customer approval drawing changes required due to misinterpretation by Seller will be at Seller's expense. Approval drawings generated by Bid Manager are excluded from this provision.

## Warranty

### *Warranty for Products*

Seller warrants that the Products manufactured by it will conform to Seller's applicable specifications and be free from failure due to defects in workmanship and material for one (1) year from the date of installation of the Product or eighteen (18) months from the date of shipment of the Product, whichever occurs first.

In the event any Product fails to comply with the foregoing warranty Seller will, at its option, either (a) repair or replace the defective Product, or defective part or component thereof, F.O.B. Seller's facility freight prepaid, or (b) credit Buyer for the purchase price of the Product. All warranty claims shall be made in writing.

Seller requires all non-conforming Products be returned at Seller's expense for evaluation unless specifically stated otherwise in writing by Seller.

This warranty does not cover failure or damage due to storage, installation, operation or maintenance not in conformance with Seller's recommendations and industry standard practice or due to accident, misuse, abuse or negligence. This warranty does not cover reimbursement for labor, gaining access, removal, installation, temporary power or any other expenses, which may be incurred in connection with repair or replacement.

This warranty does not apply to equipment not manufactured by Seller. Seller limits itself to extending the same warranty it receives from the supplier.

Effective Date: November 1, 2008

***Extended Warranty for Products***

If requested by the Buyer and specifically accepted in writing by Seller, the foregoing standard warranty for Products will be extended from the date of shipment for the period and price indicated below:

- 24 months—2% of Contract Price
- 30 months—3% of Contract Price
- 36 months—4% of Contract Price

***Special Warranty (In and Out) for Products***

If requested by the Buyer and specifically accepted in writing by Seller, Seller will, during the warranty period for Products, at an additional cost of 2% of the contract price, be responsible for the direct cost of:

1. Removing the Product from the installed location.
2. Transportation to the repair facility and return to the site.
3. Reinstallation on site.

The total liability of Seller for this Special Warranty for Products is limited to 50% of the contract price of the particular Product being repaired and excludes expenses for removing adjacent apparatus, walls, piping, structures, temporary service, etc.

***Warranty for Services***

Seller warrants that the Services performed by it hereunder will be performed in accordance with generally accepted professional standards.

The Services, which do not so conform, shall be corrected by Seller upon notification in writing by the Buyer within one (1) year after completion of the Services.

Unless otherwise agreed to in writing by Seller, Seller assumes no responsibility with respect to the suitability of the Buyer's, or its customer's, equipment or with respect to any latent defects in equipment not supplied by Seller. This warranty does not cover damage to Buyer's, or its customer's, equipment, components or parts resulting in whole or in part from improper maintenance or operation or from their deteriorated condition. Buyer will, at its cost, provide Seller with unobstructed access to the defective Services, as well as adequate free working space in the immediate vicinity of the defective Services and such facilities and systems, including, without limitation, docks, cranes and utility disconnects and connects, as may be necessary in order that Seller may perform its warranty obligations. The conducting of any tests shall be mutually agreed upon and Seller shall be notified of, and may be present at, all tests that may be made.

***Warranty for Power Systems Studies***

Seller warrants that any power systems studies performed by it will conform to generally accepted professional standards. Any portion of the study, which does not so conform, shall be corrected by Seller upon notification in writing by the Buyer within six (6) months after completion of the study. All warranty work shall be performed in a single shift straight time basis Monday through Friday. In the event that the study requires correction of warranty items on an overtime schedule, the premium portion of such overtime shall be for the Buyer's account.

***Limitation on Warranties for Products, Services and Power Systems Studies***

THE FOREGOING WARRANTIES ARE EXCLUSIVE EXCEPT FOR WARRANTY OF TITLE. SELLER DISCLAIMS ALL OTHER WARRANTIES INCLUDING ANY IMPLIED WARRANTIES OF MERCHANTABILITY AND FITNESS FOR A PARTICULAR PURPOSE.

CORRECTION OF NON-CONFORMITIES IN THE MANNER AND FOR THE PERIOD OF TIME PROVIDED ABOVE SHALL CONSTITUTE SELLER'S SOLE LIABILITY AND BUYER'S EXCLUSIVE REMEDY FOR FAILURE OF SELLER TO MEET ITS WARRANTY OBLIGATIONS, WHETHER CLAIMS OF THE BUYER ARE BASED IN CONTRACT, IN TORT (INCLUDING NEGLIGENCE OR STRICT LIABILITY), OR OTHERWISE.

***Asbestos***

Federal Law requires that building or facility owners identify the presence, location and quantity of asbestos containing material (hereinafter "ACM") at work sites. Seller is not licensed to abate ACM. Accordingly, for any contract which includes the provision of Services, prior to (i) commencement of work at any site under a specific Purchase Order, (ii) a change in the work scope of any Purchase Order, the Buyer will certify that the work area associated with the Seller's scope of work includes the handling of Class II ACM, including but not limited to generator wedges and high temperature gaskets which include asbestos materials. The Buyer shall, at its expense, conduct abatement should the removal, handling, modification or reinstallation, or some or all of them, of said Class II ACM be likely to generate airborne asbestos fibers; and should such abatement affect the cost of or time of performance of the work then Seller shall be entitled to an equitable adjustment in the schedule, price and other pertinent affected provisions of the contract.

***Compliance with Nuclear Regulation***

Seller's Products are sold as commercial grade Products not intended for application in facilities or activities licensed by the United States Nuclear Regulatory Commission for atomic purposes. Further certification will be required for use of the Products in any safety-related application in any nuclear facility licensed by the U.S. Nuclear Regulatory Commission.

***Returning Products***

Authorization and shipping instructions for the return of any Products must be obtained from Seller before returning the Products.

When return is occasioned due to Seller error, full credit including all transportation charges will be allowed.

***Product Notices***

Buyer shall provide the user (including its employees) of the Products with all Seller supplied Product notices, warnings, instructions, recommendations, and similar materials.

***Force Majeure***

Seller shall not be liable for failure to perform or delay in performance due to fire, flood, strike or other labor difficulty, act of God, act of any governmental authority or of the Buyer, riot, embargo, fuel or energy shortage, car shortage, wrecks or delays in transportation, or due to any other cause beyond Seller's reasonable control. In the event of delay in performance due to any such cause, the date of delivery or time for completion will be extended by a period of time reasonably necessary to overcome the effect of such delay.

***Liquidated Damages***

Contracts which include liquidated damage clauses for failure to meet shipping or job completion promises are not acceptable or binding on Seller, unless such clauses are specifically accepted in writing by an authorized representative of the Seller at its headquarters office.

***Patent Infringement***

Seller will defend or, at its option, settle any suit or proceeding brought against Buyer, or Buyer's customers, to the extent it is based upon a claim that any Product or part thereof, manufactured by Seller or its subsidiaries and furnished hereunder, infringes any United States patent, other than a claim of infringement based upon use of a Product or part thereof in a process, provided Seller is notified in reasonable time and given authority, information and assistance (at Seller's expense) for the defense of same. Seller shall pay all legal and court costs and expenses and court-assessed damages awarded therein against Buyer resulting from or incident to such suit or proceeding. In addition to the foregoing, if at any time Seller determines there is a substantial question of infringement of any United States patent, and the use of such Product is or may be enjoined, Seller may, at its option and expense: either (a) procure for Buyer the right to continue using and selling the Product; (b) replace the Product with non-infringing apparatus; (c) modify the Product so it becomes non-infringing; or (d) as a last resort, remove the Product and refund the purchase price, equitably adjusted for use and obsolescence. In no case does Seller agree to pay any recovery based upon its Buyer's savings or profit through use of Seller's Products whether the use be special or ordinary. The foregoing states the entire liability of Seller for patent infringement.

The preceding paragraph does not apply to any claim of infringement based upon: (a) any modification made to a Product other than by Seller; (b) any design and/or specifications of Buyer to which a Product was manufactured; or (c) the use or combination of Product with other products where the Product does not itself infringe. As to the above-identified claim situations where the preceding paragraph does not apply, Buyer shall defend and hold Seller harmless in the same manner and to the extent as Seller's obligations described in the preceding paragraph. Buyer shall be responsible for obtaining (at Buyer's expense) all license rights required for Seller to be able to use software products in the possession of Buyer where such use is required in order to perform any Service for Buyer.

With respect to a Product or part thereof not manufactured by Seller or its subsidiaries, Seller will attempt to obtain for Buyer, from the supplier(s), the patent indemnification protection normally provided by the supplier(s) to customers.

***Limitation of Liability***

THE REMEDIES OF THE BUYER SET FORTH IN THIS CONTRACT ARE EXCLUSIVE AND ARE ITS SOLE REMEDIES FOR ANY FAILURE OF SELLER TO COMPLY WITH ITS OBLIGATIONS HEREUNDER.

NOTWITHSTANDING ANY PROVISION IN THIS CONTRACT TO THE CONTRARY, IN NO EVENT SHALL SELLER BE LIABLE IN CONTRACT, IN TORT (INCLUDING NEGLIGENCE OR STRICT LIABILITY) OR OTHERWISE FOR DAMAGE TO PROPERTY OR EQUIPMENT OTHER THAN PRODUCTS SOLD HEREUNDER, LOSS OF PROFITS OR REVENUE, LOSS OF USE OF PRODUCTS, COST OF

CAPITAL, CLAIMS OF CUSTOMERS OF THE BUYER OR ANY SPECIAL, INDIRECT, INCIDENTAL OR CONSEQUENTIAL DAMAGES WHATSOEVER, REGARDLESS OF WHETHER SUCH POTENTIAL DAMAGES ARE FORESEEABLE OR IF SELLER HAS BEEN ADVISED OF THE POSSIBILITY OF SUCH DAMAGES.

THE TOTAL CUMULATIVE LIABILITY OF SELLER ARISING FROM OR RELATED TO THIS CONTRACT WHETHER THE CLAIMS ARE BASED IN CONTRACT, IN TORT (INCLUDING NEGLIGENCE OR STRICT LIABILITY) OR OTHERWISE, SHALL NOT EXCEED THE PRICE OF THE PRODUCT OR SERVICES ON WHICH SUCH LIABILITY IS BASED.

**A**

ACD . . . . . V1-**T6**-4, V1-**T6**-6
ACD2 . . . . . V1-**T6**-4, V1-**T6**-6
ARP . . . . . V1-**T4**-77, V1-**T5**-8
ARP0 . . . . . V1-**T4**-30, V1-**T4**-33, V1-**T4**-85

**B**

BD . . . . . V1-**T1**-81
BH . . . . . V1-**T1**-85
BHG . . . . . V1-**T1**-85
BHL . . . . . V1-**T1**-85
BHT . . . . . V1-**T1**-85
BIN . . . . . V1-**T1**-25
BINA . . . . . V1-**T1**-22, V1-**T1**-25, V1-**T1**-61, V1-**T1**-92
BJ . . . . . V1-**T1**-84, V1-**T1**-85
BJH . . . . . V1-**T1**-84, V1-**T1**-85
BJL . . . . . V1-**T1**-86
BQ . . . . . V1-**T1**-81
BQC . . . . . V1-**T1**-83
BR . . . . . V1-**T2**-10
BRB . . . . . V1-**T1**-26
BRC . . . . . V1-**T1**-26, V1-**T1**-57
BRD . . . . . V1-**T1**-26, V1-**T1**-82, V1-**T1**-85
BRE . . . . . V1-**T1**-85
BRF . . . . . V1-**T1**-61
BRG . . . . . V1-**T1**-26, V1-**T1**-59, V1-**T1**-66, V1-**T1**-93
BRH . . . . . V1-**T1**-52, V1-**T1**-77, V1-**T1**-78, V1-**T1**-85, V1-**T4**-98, V1-**T4**-127
BRHH . . . . . V1-**T1**-77, V1-**T4**-98, V1-**T4**-127
BRL . . . . . V1-**T1**-26, V1-**T1**-52, V1-**T1**-57, V1-**T1**-61, V1-**T1**-78, V1-**T1**-85
BRL2 . . . . . V1-**T1**-79
BRM . . . . . V1-**T1**-61, V1-**T1**-86
BRP . . . . . V1-**T1**-86
BRQ . . . . . V1-**T1**-85
BRR . . . . . V1-**T1**-61
BRS . . . . . V1-**T1**-15, V1-**T1**-52, V1-**T1**-61, V1-**T1**-84, V1-**T4**-139
BRSF . . . . . V1-**T4**-139
BRSUR . . . . . V1-**T1**-15, V1-**T2**-9
BRW . . . . . V1-**T1**-84
BRX . . . . . V1-**T1**-77
BR1 . . . . . V1-**T1**-46–V1-**T1**-49, V1-**T1**-51, V1-**T1**-53, V1-**T1**-59, V1-**T1**-60, V1-**T1**-77, V1-**T1**-78, V1-**T1**-82
BR2 . . . . . V1-**T1**-46–V1-**T1**-49, V1-**T1**-51–V1-**T1**-52, V1-**T1**-57, V1-**T1**-59, V1-**T1**-60, V1-**T1**-77, V1-**T1**-82, V1-**T1**-84, V1-**T4**-98, V1-**T4**-127, V1-**T5**-22
BR23 . . . . . V1-**T2**-7
BR25 . . . . . V1-**T2**-7
BR3 . . . . . V1-**T1**-46, V1-**T1**-49, V1-**T1**-51–V1-**T1**-52, V1-**T1**-57, V1-**T1**-59, V1-**T1**-78, V1-**T1**-82
BR4 . . . . . V1-**T1**-46–V1-**T1**-49, V1-**T1**-51–V1-**T1**-53, V1-**T1**-57, V1-**T1**-82
BR42 . . . . . V1-**T1**-47
BR5 . . . . . V1-**T1**-58
BR6 . . . . . V1-**T1**-48
BR8 . . . . . V1-**T1**-46, V1-**T1**-48, V1-**T1**-49, V1-**T1**-51, V1-**T1**-52
BSC . . . . . V1-**T1**-22
BSS . . . . . V1-**T1**-22, V1-**T1**-61
BW . . . . . V1-**T1**-61, V1-**T4**-43
BWFP . . . . . V1-**T1**-61
B424 . . . . . V1-**T1**-47
B60N . . . . . V1-**T6**-4, V1-**T6**-6

**C**

CC . . . . . V1-**T1**-38, V1-**T1**-56, V1-**T1**-85, V1-**T1**-95
CCH . . . . . V1-**T1**-95
CCL . . . . . V1-**T1**-38, V1-**T1**-85
CCV . . . . . V1-**T1**-95, V1-**T4**-95
CCVH . . . . . V1-**T1**-95, V1-**T4**-95, V1-**T4**-98, V1-**T4**-137
CCV2 . . . . . V1-**T4**-95, V1-**T4**-98, V1-**T4**-127, V1-**T4**-137
CC3 . . . . . V1-**T1**-95, V1-**T4**-137
CG . . . . . V1-**T4**-76
CH . . . . . V1-**T1**-90
CHB . . . . . V1-**T1**-22, V1-**T1**-61, V1-**T5**-8
CHE . . . . . V1-**T1**-16, V1-**T1**-23
CHEC . . . . . V1-**T2**-9
CHEG . . . . . V1-**T3**-14, V1-**T3**-18
CHF . . . . . V1-**T1**-22, V1-**T1**-32, V1-**T1**-33
CHFL . . . . . V1-**T5**-7
CHG . . . . . V1-**T1**-25
CHH . . . . . V1-**T1**-38
CHI . . . . . V1-**T5**-8
CHL . . . . . V1-**T1**-11, V1-**T1**-16, V1-**T1**-38, V1-**T1**-99, V1-**T5**-8
CHLD . . . . . V1-**T5**-8
CHLDF . . . . . V1-**T5**-8, V1-**T5**-9
CHM . . . . . V1-**T1**-22, V1-**T1**-38, V1-**T4**-41, V1-**T5**-12, V1-**T5**-17
CHMM . . . . . V1-**T4**-41
CHM1 . . . . . V1-**T5**-12, V1-**T5**-17
CHM4 . . . . . V1-**T5**-17
CHM5 . . . . . V1-**T5**-12
CHM7 . . . . . V1-**T5**-12
CHN . . . . . V1-**T1**-22, V1-**T1**-25, V1-**T5**-9
CHOU . . . . . V1-**T5**-9
CHP . . . . . V1-**T1**-24, V1-**T1**-36–V1-**T1**-38, V1-**T5**-23
CHPA . . . . . V1-**T5**-7, V1-**T5**-23
CHPE . . . . . V1-**T5**-7, V1-**T5**-23
CHPO . . . . . V1-**T5**-8, V1-**T5**-9
CHQ . . . . . V1-**T1**-97, V1-**T2**-10
CHR . . . . . V1-**T1**-22, V1-**T5**-12, V1-**T5**-17
CHR1 . . . . . V1-**T5**-12, V1-**T5**-17
CHR3 . . . . . V1-**T5**-12
CHR7 . . . . . V1-**T5**-12
CHS . . . . . V1-**T1**-15, V1-**T1**-16, V1-**T1**-22
CHSA . . . . . V1-**T2**-10
CHSPC . . . . . V1-**T2**-6
CHSPF . . . . . V1-**T2**-6
CHSPT . . . . . V1-**T2**-4–V1-**T2**-6
CHSP3 . . . . . V1-**T2**-6
CHSUR . . . . . V1-**T2**-9
CHT . . . . . V1-**T1**-35
CHTE . . . . . V1-**T5**-7

CHU . . . . . V1-**T4**-84, V1-**T4**-85, V1-**T5**-11, V1-**T5**-17
CHUD . . . . . V1-**T5**-9
CHU1 . . . . . V1-**T5**-11, V1-**T5**-17
CHU2 . . . . . V1-**T4**-84, V1-**T5**-11
CHU3 . . . . . V1-**T5**-11
CHU4 . . . . . V1-**T5**-11, V1-**T5**-17
CHU5 . . . . . V1-**T5**-11
CHU6 . . . . . V1-**T5**-11
CHU7 . . . . . V1-**T5**-11
CHVH . . . . . V1-**T4**-127
CH1 . . . . . V1-**T1**-7, V1-**T1**-10, V1-**T1**-13, V1-**T1**-23, V1-**T1**-32–V1-**T1**-35, V1-**T1**-37, V1-**T1**-38, V1-**T3**-17, V1-**T3**-18, V1-**T4**-84
CH2 . . . . . V1-**T1**-7–V1-**T1**-10, V1-**T1**-11, V1-**T1**-13, V1-**T1**-17, V1-**T1**-18, V1-**T1**-23, V1-**T1**-32–V1-**T1**-35, V1-**T1**-37, V1-**T4**-77, V1-**T4**-84, V1-**T4**-85
CH2L . . . . . V1-**T1**-9
CH23 . . . . . V1-**T2**-7
CH25 . . . . . V1-**T2**-7
CH3 . . . . . V1-**T1**-7, V1-**T1**-8, V1-**T1**-10–V1-**T1**-14, V1-**T1**-17, V1-**T1**-18, V1-**T1**-23, V1-**T1**-32–V1-**T1**-35, V1-**T3**-14
CH4 . . . . . V1-**T1**-7–V1-**T1**-14, V1-**T1**-17, V1-**T1**-18, V1-**T1**-23, V1-**T3**-17, V1-**T3**-18
CH4L . . . . . V1-**T1**-9
CH5 . . . . . V1-**T1**-14, V1-**T4**-85
CH6 . . . . . V1-**T1**-13, V1-**T1**-14, V1-**T1**-17, V1-**T1**-23, V1-**T3**-17, V1-**T3**-18
CH7 . . . . . V1-**T1**-7, V1-**T1**-10–V1-**T1**-13, V1-**T1**-24
CH8 . . . . . V1-**T1**-7–V1-**T1**-11, V1-**T1**-17, V1-**T1**-18, V1-**T1**-23, V1-**T1**-26, V1-**T3**-17, V1-**T3**-18
CH8L . . . . . V1-**T1**-9
CH9 . . . . . V1-**T1**-25, V1-**T1**-38, V1-**T1**-61
CLRP . . . . . V1-**T1**-98
CL1 . . . . . V1-**T1**-98
CL2 . . . . . V1-**T1**-98
CMB . . . . . V1-**T4**-41, V1-**T4**-42, V1-**T4**-66
CMBB . . . . . V1-**T4**-41
CMBE . . . . . V1-**T4**-50, V1-**T4**-51, V1-**T4**-66, V1-**T4**-86
CMBX . . . . . V1-**T4**-42
CSH . . . . . V1-**T1**-11, V1-**T1**-16
CSH2 . . . . . V1-**T1**-11, V1-**T4**-43
CSR . . . . . V1-**T1**-11, V1-**T1**-16, V1-**T1**-22, V1-**T1**-52, V1-**T4**-43, V1-**T5**-22
CSR2 . . . . . V1-**T1**-11, V1-**T4**-43
CTA . . . . . V1-**T4**-117
CVH . . . . . V1-**T4**-137
CVH2 . . . . . V1-**T4**-97, V1-**T4**-98, V1-**T4**-127
CVS . . . . . V1-**T4**-137
CVS2 . . . . . V1-**T4**-97, V1-**T4**-98, V1-**T4**-127
CV2 . . . . . V1-**T4**-97, V1-**T4**-98, V1-**T4**-127, V1-**T4**-137
CV3 . . . . . V1-**T4**-137

**D**

DPB . . . . . V1-**T6**-4, V1-**T6**-6
DPB2 . . . . . V1-**T6**-4, V1-**T6**-6
DPF . . . . . V1-**T6**-4–V1-**T6**-6
DPF2 . . . . . V1-**T6**-4–V1-**T6**-6
DPU . . . . . V1-**T6**-4–V1-**T6**-6
DPU2 . . . . . V1-**T6**-4–V1-**T6**-5
DS . . . . . V1-**T1**-25, V1-**T1**-66, V1-**T5**-7
DS1 . . . . . V1-**T4**-67
DS2 . . . . . V1-**T4**-67
DS3 . . . . . V1-**T4**-67
DS9 . . . . . V1-**T4**-67

**E**

ECC . . . . . V1-**T1**-95
ECCV . . . . . V1-**T1**-95
EDL . . . . . V1-**T4**-34
EGEN . . . . . V1-**T3**-3, V1-**T3**-4
EGS . . . . . V1-**T3**-18
EHD . . . . . V1-**T4**-137
EPBD . . . . . V1-**T4**-34
EPBQ . . . . . V1-**T4**-34
EPBS . . . . . V1-**T4**-34
EPBT . . . . . V1-**T4**-34
ESL . . . . . V1-**T4**-34

**G**

GB . . . . . V1-**T1**-25, V1-**T1**-66, V1-**T1**-93
GBK . . . . . V1-**T5**-9
GFC . . . . . V1-**T1**-79, V1-**T1**-80
GFE . . . . . V1-**T1**-80
GHC . . . . . V1-**T5**-75
GTAP . . . . . V1-**T1**-59

**H**

HL . . . . . V1-**T1**-85
HPB . . . . . V1-**T4**-77
HPC . . . . . V1-**T4**-76
HPP . . . . . V1-**T4**-77
HP2 . . . . . V1-**T4**-77
HP4 . . . . . V1-**T4**-76, V1-**T4**-77
HP8 . . . . . V1-**T4**-76

**I**

IG12 . . . . . V1-**T2**-8
IG52 . . . . . V1-**T2**-8
IG53 . . . . . V1-**T2**-8
IMM . . . . . V1-**T4**-67

**J**

JT . . . . . V1-**T5**-75

**L**

LC . . . . . V1-**T1**-22, V1-**T1**-61

**M**

MBB . . . . . V1-**T4**-41
MBE . . . . . V1-**T4**-50, V1-**T4**-66
MBED . . . . . V1-**T4**-60
MBER . . . . . V1-**T4**-51
MBE1 . . . . . V1-**T4**-50, V1-**T4**-51
MBE2 . . . . . V1-**T4**-50, V1-**T4**-51
MBE3 . . . . . V1-**T4**-51
MBE4 . . . . . V1-**T4**-51

MBE8 . . . . . V1-**T4**-51
MBH . . . . . V1-**T4**-67
MBP . . . . . V1-**T4**-41
MBT . . . . . V1-**T4**-42
MBX . . . . . V1-**T4**-41
MB1 . . . . . V1-**T4**-42
MB2 . . . . . V1-**T4**-66
MB20 . . . . . V1-**T4**-42
MB4 . . . . . V1-**T4**-42
MB5 . . . . . V1-**T4**-67
MB8 . . . . . V1-**T4**-42, V1-**T4**-66
MCB . . . . . V1-**T1**-38, V1-**T1**-85, V1-**T4**-43
MCBK . . . . . V1-**T4**-43
MHD . . . . . V1-**T5**-23
MHM. . . . . V1-**T5**-22
MHP . . . . . V1-**T5**-23
MHR . . . . . V1-**T5**-22
MM . . . . . V1-**T4**-139
MPL. . . . . V1-**T5**-75–V1-**T5**-77
MPLFH . . . . . V1-**T5**-77
MSEG . . . . . V1-**T2**-6, V1-**T4**-35
MSL. . . . . V1-**T4**-142
MST. . . . . V1-**T4**-142

**N**

NL . . . . . V1-**T1**-22, V1-**T1**-61

**Q**

QCF. . . . . V1-**T5**-75
QCGF . . . . . V1-**T5**-75

**R**

RH . . . . . V1-**T1**-66
RN . . . . . V1-**T1**-18
RV . . . . . V1-**T5**-75, V1-**T5**-77

**S**

SPC . . . . . V1-**T1**-22, V1-**T1**-61
SP1 . . . . . V1-**T2**-4
SR . . . . . V1-**T1**-39, V1-**T1**-86
SRL . . . . . V1-**T1**-22, V1-**T1**-61
ST . . . . . V1-**T1**-39
STL . . . . . V1-**T4**-26

**T**

TCD . . . . . V1-**T1**-22, V1-**T1**-61
TDL . . . . . V1-**T1**-22, V1-**T1**-61
TH . . . . . V1-**T1**-85
TT120 . . . . . V1-**T1**-21

**U**

UAHT. . . . . V1-**T4**-5
UAST. . . . . V1-**T4**-26
UAT . . . . . V1-**T4**-20
UATE. . . . . V1-**T4**-15
UATH. . . . . V1-**T4**-12, V1-**T4**-13
UATR. . . . . V1-**T4**-4–V1-**T4**-6
UATZ. . . . . V1-**T4**-6, V1-**T4**-21
UBEH. . . . . V1-**T4**-14
UBGT. . . . . V1-**T4**-15
UBH . . . . . V1-**T4**-20, V1-**T4**-21
UBHR. . . . . V1-**T4**-5, V1-**T4**-6, V1-**T4**-14
UBHT. . . . . V1-**T4**-5
UBTE . . . . . V1-**T4**-14
UBTH. . . . . V1-**T4**-12, V1-**T4**-13
UBTR . . . . . V1-**T4**-6
UEHT . . . . . V1-**T4**-20
UETH . . . . . V1-**T4**-14
UE7 . . . . . V1-**T4**-14
UFHT . . . . . V1-**T4**-4–V1-**T4**-5
UFT . . . . . V1-**T4**-12, V1-**T4**-15
UFTE . . . . . V1-**T4**-14
UFTH . . . . . V1-**T4**-12
UFTR . . . . . V1-**T4**-5
UGE . . . . . V1-**T4**-15
UGHR. . . . . V1-**T4**-5
UGHT. . . . . V1-**T4**-4–V1-**T4**-6, V1-**T4**-31
UGRS. . . . . V1-**T4**-6
UGTE . . . . . V1-**T4**-14, V1-**T4**-15
UGTH. . . . . V1-**T4**-12
UGTR . . . . . V1-**T4**-4, V1-**T4**-5, V1-**T4**-31
UHI. . . . . V1-**T4**-20
UHIR . . . . . V1-**T4**-5
UHT . . . . . V1-**T4**-20, V1-**T4**-21
UHTR . . . . . V1-**T4**-4–V1-**T4**-6, V1-**T4**-28, V1-**T4**-31
UHTT . . . . . V1-**T4**-4, V1-**T4**-6, V1-**T4**-20
UH4 . . . . . V1-**T4**-12
UH5 . . . . . V1-**T4**-12
UH7 . . . . . V1-**T4**-12
UIH. . . . . V1-**T4**-14
ULTS . . . . . V1-**T4**-26
UNRR. . . . . V1-**T4**-7
URRS . . . . . V1-**T4**-7
URS . . . . . V1-**T4**-4, V1-**T4**-6, V1-**T4**-7
URT . . . . . V1-**T4**-22
URTR . . . . . V1-**T4**-7
USTH . . . . . V1-**T4**-26
USTL . . . . . V1-**T4**-26
USTS . . . . . V1-**T4**-26
UST6 . . . . . V1-**T4**-26
UTE . . . . . V1-**T4**-14, V1-**T4**-32
UTH . . . . . V1-**T4**-12, V1-**T4**-13, V1-**T4**-32
UTRS . . . . . V1-**T4**-4–V1-**T4**-7, V1-**T4**-31
UTTE . . . . . V1-**T4**-14, V1-**T4**-15
UTTH . . . . . V1-**T4**-12
UTZR . . . . . V1-**T4**-6
UT2 . . . . . V1-**T4**-20, V1-**T4**-21
UT3 . . . . . V1-**T4**-21
UT4 . . . . . V1-**T4**-20, V1-**T4**-21
UT5 . . . . . V1-**T4**-21
UT6 . . . . . V1-**T4**-21
U2R . . . . . V1-**T4**-22
U2V . . . . . V1-**T4**-22
U3R . . . . . V1-**T4**-20, V1-**T4**-22
U3V . . . . . V1-**T4**-22
U4R . . . . . V1-**T4**-20–V1-**T4**-22

U5R . . . . . V1-**T4**-20–V1-**T4**-22
U6R . . . . . V1-**T4**-20
U921 . . . . . V1-**T4**-5

## W

WCG . . . . . V1-**T4**-138

## Numerics

1BPS . . . . . V1-**T4**-108
1MCB . . . . . V1-**T4**-104, V1-**T4**-105
1MFS. . . . . V1-**T4**-106, V1-**T4**-107
1MHC . . . . . V1-**T4**-104, V1-**T4**-105
1MM . . . . . V1-**T4**-115, V1-**T4**-121, V1-**T4**-138, V1-**T4**-139, V1-**T4**-141
1MMA. . . . . V1-**T4**-138
1MMB. . . . . V1-**T4**-138–V1-**T4**-142
1MMC. . . . . V1-**T4**-140
1MMG. . . . . V1-**T4**-94
1MMJ . . . . . V1-**T4**-139
1MMM . . . . . V1-**T4**-140
1MMP. . . . . V1-**T4**-138
1MMR. . . . . V1-**T4**-140
1MMS. . . . . V1-**T4**-139
1MMW . . . . . V1-**T4**-138, V1-**T4**-141
1MM3 . . . . . V1-**T4**-120, V1-**T4**-121
1MM4 . . . . . V1-**T4**-120, V1-**T4**-121
1MM5 . . . . . V1-**T4**-120, V1-**T4**-121, V1-**T4**-138
1MM6 . . . . . V1-**T4**-120, V1-**T4**-121
1MPL. . . . . V1-**T4**-94
1MPS . . . . . V1-**T4**-92–V1-**T4**-94
1MP2. . . . . V1-**T4**-92, V1-**T4**-93
1MP3. . . . . V1-**T4**-92, V1-**T4**-93
1MP4. . . . . V1-**T4**-92, V1-**T4**-93
1MP5. . . . . V1-**T4**-92, V1-**T4**-93
1MP6. . . . . V1-**T4**-92, V1-**T4**-93
1MTB . . . . . V1-**T4**-103
1UGP. . . . . V1-**T4**-107
1003 . . . . . V1-**T4**-5, V1-**T4**-6
1004 . . . . . V1-**T4**-5, V1-**T4**-6, V1-**T4**-13, V1-**T4**-20, V1-**T4**-21, V1-**T4**-26
1005 . . . . . V1-**T4**-6
1006 . . . . . V1-**T4**-6, V1-**T4**-13, V1-**T4**-20, V1-**T4**-28
1007 . . . . . V1-**T4**-5, V1-**T4**-13, V1-**T4**-15, V1-**T4**-20, V1-**T4**-26
1008 . . . . . V1-**T4**-5, V1-**T4**-6, V1-**T4**-13, V1-**T4**-15, V1-**T4**-20, V1-**T4**-21, V1-**T4**-26, V1-**T4**-28
1009 . . . . . V1-**T4**-5–V1-**T4**-7, V1-**T4**-13–V1-**T4**-15, V1-**T4**-20, V1-**T4**-21, V1-**T4**-28
1010 . . . . . V1-**T4**-12
1208 . . . . . V1-**T2**-8
1210 . . . . . V1-**T2**-8
1212. . . . . V1-**T1**-91
1224. . . . . V1-**T1**-50, V1-**T1**-91
1624. . . . . V1-**T1**-91
17NE . . . . . V1-**T1**-92
1836. . . . . V1-**T1**-91
20NE . . . . . V1-**T1**-92
2024. . . . . V1-**T1**-91
24IN . . . . . V1-**T1**-91
24NE . . . . . V1-**T1**-92
2424. . . . . V1-**T1**-91
2442. . . . . V1-**T1**-91
2460. . . . . V1-**T1**-21
3BPS . . . . . V1-**T4**-108
3BR . . . . . V1-**T1**-54–V1-**T1**-56, V1-**T1**-61
3B42 . . . . . V1-**T1**-54
3HM. . . . . V1-**T4**-109
3MC. . . . . V1-**T4**-109
3MCB. . . . . V1-**T4**-104, V1-**T4**-105, V1-**T4**-109
3MF . . . . . V1-**T4**-109
3MFS. . . . . V1-**T4**-106, V1-**T4**-107, V1-**T4**-109
3MHC . . . . . V1-**T4**-104, V1-**T4**-105
3MM . . . . . V1-**T4**-115, V1-**T4**-138, V1-**T4**-139
3MMB . . . . . V1-**T4**-138
3MME . . . . . V1-**T4**-139, V1-**T4**-141
3MM2 . . . . . V1-**T4**-120–V1-**T4**-123
3MM3 . . . . . V1-**T4**-120–V1-**T4**-123
3MM4 . . . . . V1-**T4**-120–V1-**T4**-123, V1-**T4**-128
3MM5 . . . . . V1-**T4**-120–V1-**T4**-123, V1-**T4**-128
3MM6 . . . . . V1-**T4**-120–V1-**T4**-123
3MTB. . . . . V1-**T4**-103
3UGP. . . . . V1-**T4**-107
304. . . . . V1-**T1**-91
3424. . . . . V1-**T1**-55
35MM . . . . . V1-**T4**-131
35NE . . . . . V1-**T1**-92
35SS . . . . . V1-**T4**-133
37M . . . . . V1-**T4**-141
37MM . . . . . V1-**T4**-132, V1-**T4**-141, V1-**T4**-142
37SS . . . . . V1-**T4**-133
4242. . . . . V1-**T1**-50, V1-**T1**-91
47. . . . . V1-**T4**-140, V1-**T4**-142
48IN . . . . . V1-**T1**-91
49. . . . . V1-**T4**-140, V1-**T4**-142
5250. . . . . V1-**T2**-8
5262. . . . . V1-**T2**-8
5362. . . . . V1-**T2**-8
612I . . . . . V1-**T1**-91
7821. . . . . V1-**T4**-13
7866. . . . . V1-**T4**-5
816I . . . . . V1-**T1**-91

## A


Access Panel
- Marina Power and Lighting Equipment/RV Park Hook-Ups
  - Accessories . . . . . V1-**T5**-77

Accessories
- Classified Circuit Breakers
  - Loadcenters and Circuit Breakers . . . . . V1-**T1**-99
- Manual Transfer Switches
  - Flush Flange Kit . . . . . V1-**T3**-18
  - Power Inlet Box . . . . . V1-**T3**-18
- Marina Power and Lighting Equipment/RV Park Hook-Ups
  - Access Panel . . . . . V1-**T5**-77
  - Breaker Plate . . . . . V1-**T5**-75
  - Bus Bar Assembly . . . . . V1-**T5**-76, V1-**T5**-77
  - Circuit Breakers . . . . . V1-**T5**-75
  - Cover Set . . . . . V1-**T5**-75
  - Digital Electronic Meters . . . . . V1-**T5**-76
  - Door Hasp . . . . . V1-**T5**-77
  - External Cover . . . . . V1-**T5**-76
  - Faceplate . . . . . V1-**T5**-75–V1-**T5**-77
  - Fire Extinguisher. . . . . V1-**T5**-77
  - Fluorescent Light Assembly. . . . . V1-**T5**-75
  - Fuse Holder . . . . . V1-**T5**-76
  - Hose and Cable Brackets . . . . . V1-**T5**-75
  - Isolation Plate. . . . . V1-**T5**-75
  - Lens . . . . . V1-**T5**-77
  - Life Ring . . . . . V1-**T5**-77
  - Light and Lens Assembly. . . . . V1-**T5**-75
  - Light Fuse. . . . . V1-**T5**-76, V1-**T5**-77
  - Light Holder . . . . . V1-**T5**-77
  - Main Door. . . . . V1-**T5**-75, V1-**T5**-77
  - Main Housing . . . . . V1-**T5**-75–V1-**T5**-77
  - Mounting Brackets. . . . . V1-**T5**-77
  - Mounting Feet . . . . . V1-**T5**-76
  - Phone, Cable, Internet Assemblies . . . . . V1-**T5**-76
  - Receptacles . . . . . V1-**T5**-75
  - Spring Closure . . . . . V1-**T5**-75
  - Strobe Light . . . . . V1-**T5**-77
  - Water Assemblies . . . . . V1-**T5**-76
- Metering Products
  - Group Metering Inline Current Transformer Cabinets Accessories, Group Metering . . . . . V1-**T4**-117
  - House Panel Accessories. . . . . V1-**T4**-77
  - Meter Socket Accessories . . . . . V1-**T4**-30
  - Metering Stack Accessories, Group Metering . V1-**T4**-138, V1-**T4**-139, V1-**T4**-141
  - West Coast All-In-One Design Accessories, Meter Breakers . V1-**T4**-60
- Mobile Home Panels. . . . . V1-**T5**-23
  - Direct Feed Kit . . . . . V1-**T5**-23
  - Padmount Adapter . . . . . V1-**T5**-23
  - Pedestal Extension. . . . . V1-**T5**-23
- Surge Protection Devices and Lightning Arresters
  - 3-Pack. . . . . V1-**T2**-6
  - Flushmount Kit . . . . . V1-**T2**-6
  - Outdoor Communication Grounding Device . . . . . V1-**T2**-6
  - Quick Connect Design . . . . . V1-**T2**-6
  - Raintight Enclosure . . . . . V1-**T2**-6
- Temporary Power/RV Park
  - Cable TV and Telephone Bracket . . . . . V1-**T5**-7
  - Fluorescent Light Kit. . . . . V1-**T5**-7
  - Pad-Mount Bracket . . . . . V1-**T5**-7
  - Pedestal Extension . . . . . V1-**T5**-7
  - Rainproof Conduit Hub . . . . . V1-**T5**-7
  - Renewal Parts. . . . . V1-**T5**-8
- Type BR Loadcenters and Circuit Breakers . . . . . V1-**T1**-61
  - Alarm Contacts . . . . . V1-**T1**-86
  - Auxiliary Contact . . . . . V1-**T1**-86
  - Field Installation and Parts . . . . . V1-**T1**-61
  - Filler Plates . . . . . V1-**T1**-61
  - Ground Bar Kits. . . . . V1-**T1**-66, V1-**T1**-93
  - Handle Lockoffs . . . . . V1-**T1**-85
  - Handle Ties . . . . . V1-**T1**-85
  - Hold-Down Kits. . . . . V1-**T1**-85
  - Main and Sub-Feed Lug Blocks . . . . . V1-**T1**-61
  - Main Breaker Lug Kits. . . . . V1-**T1**-85
  - Main Lugs . . . . . V1-**T1**-61
  - Mechanical Interlock Covers. . . . . V1-**T1**-64
  - Mechanical Interlocks . . . . . V1-**T1**-86
  - Padlock Brackets. . . . . V1-**T1**-86
  - Rainproof Conduit Hubs . . . . . V1-**T1**-66
  - Shunt Trip . . . . . V1-**T1**-86
- Type CH Loadcenters and Circuit Breakers . . . . . V1-**T1**-22
  - Decorator Cover . . . . . V1-**T1**-26
  - Field Installation and Parts . . . . . V1-**T1**-22
  - Goof Collars . . . . . V1-**T1**-26
  - Ground Bar Kits. . . . . V1-**T1**-25
  - Handle Lockdogs . . . . . V1-**T1**-38
  - Handle Lockoffs . . . . . V1-**T1**-38
  - Handle Ties . . . . . V1-**T1**-38
  - Hold-Down Kits. . . . . V1-**T1**-38
  - Main Breaker Lug Kits. . . . . V1-**T1**-38
  - Mechanical Interlock Covers. . . . . V1-**T1**-23
  - Mechanical Interlocks . . . . . V1-**T1**-23, V1-**T1**-38
  - Mounting Bases . . . . . V1-**T1**-38
  - Neutral Bar Accessories . . . . . V1-**T1**-25
  - Phase Adapters. . . . . V1-**T1**-25
  - Rainproof Conduit Hubs . . . . . V1-**T1**-25
  - Shunt Trip . . . . . V1-**T1**-39

Admiral—SS
- Marina Power and Lighting Equipment
  - Power Pedestals. . . . . V1-**T5**-62

Air Conditioning Disconnects. . . . . V1-**T6**-1–V1-**T6**-10
- Cross-Reference . . . . . V1-**T6**-6
- Ground Fault Receptacle . . . . . V1-**T6**-5
- Molded Case Switch . . . . . V1-**T6**-2, V1-**T6**-4
- Pullouts
  - Fused . . . . . V1-**T6**-2, V1-**T6**-4
  - Non-Fused. . . . . V1-**T6**-2, V1-**T6**-4

Air Cooled Generators
- Standby Generator. . . . . V1-**T3**-3

Air Cooled Standby
- Standby Generator System . . . . . V1-**T3**-2

Alarm Contacts
- Type BR Loadcenters and Circuit Breakers
  - Accessories. . . . . V1-**T1**-86

Aluminum Meter Breakers
- Metering Products
  - Meter Breakers. . . . . V1-**T4**-87

ATS Kit
Automatic Transfer Switches . . . . . V1-**T3**-14

ATS Ready LC with factory-installed ATS kit
Automatic Transfer Switches . . . . . V1-**T3**-14

ATS Ready Loadcenter
Automatic Transfer Switches . . . . . V1-**T3**-14

Automatic Transfer Switches . . . . . V1-**T3**-11–V1-**T3**-15
ATS Ready LC with factory-installed ATS kit. . . . . V1-**T3**-14
ATS Ready Loadcenter . . . . . V1-**T3**-14
ATS Kit . . . . . V1-**T3**-14
Eaton's Green Line . . . . . V1-**T3**-11
Fully Automatic Transfer Switches . . . . . V1-**T3**-11

Auxiliary Contact
Type BR Loadcenters and Circuit Breakers
Accessories . . . . . V1-**T1**-86

## B

BR Circuit Breakers
BR Specialty Products
Type BR
Loadcenters and Circuit Breakers . . . . . V1-**T1**-76

BR Quick Connect Neutral Loadcenters
BR Specialty Products
Type BR
Loadcenters and Circuit Breakers . . . . . V1-**T1**-57

Breaker Plate
Marina Power and Lighting Equipment/RV Park Hook-Ups
Accessories . . . . . V1-**T5**-75

Bus Bar Assembly
Marina Power and Lighting Equipment/RV Park Hook-Ups
Accessories . . . . . V1-**T5**-76, V1-**T5**-77

## C

Cable TV and Telephone Bracket
Temporary Power/RV Park
Accessories . . . . . V1-**T5**-7

CH Circuit Breakers
Type CH
Loadcenters and Circuit Breakers . . . . . V1-**T1**-31

CH Specialty Products
Non-Metallic Loadcenter. . . . . V1-**T1**-21

CH Style Renovation Solutions
Metering Products
Meter Breakers . . . . . V1-**T4**-86

Circuit Breakers
Marina Power and Lighting Equipment/RV Park Hook-Ups
Accessories . . . . . V1-**T5**-75

Classified Circuit Breakers
Loadcenters and Circuit Breakers . . . . . V1-**T1**-96–V1-**T1**-100
Accessories . . . . . V1-**T1**-99
Type CH Replacement Breakers . . . . . V1-**T1**-97

Commercial Lever Bypass Sockets
Metering Products . . . . . V1-**T4**-10–V1-**T4**-17

Commercial Meter Stack Modules
Group Metering
Metering Products . . . . . V1-**T4**-129

Commercial Safety Sockets
Meter Breakers
Metering Products . . . . . V1-**T4**-83

Common Trip Quadplex Breakers
Type BR
Loadcenters and Circuit Breakers. . . . . V1-**T1**-83

Communications Grounding Device
Metering Products. . . . . V1-**T4**-35, V1-**T4**-36

Convertible Loadcenters MCB
Type BR
Loadcenters and Circuit Breakers. . . . . V1-**T1**-51
Type CH
Loadcenters and Circuit Breakers. . . . . V1-**T1**-11

Convertible Loadcenters MLO
Type BR
Loadcenters and Circuit Breakers. . . . . V1-**T1**-51
Type CH
Loadcenters and Circuit Breakers. . . . . V1-**T1**-11

Cover Set
Marina Power and Lighting Equipment/RV Park Hook-Ups
Accessories. . . . . V1-**T5**-75

Cross-Reference
Metering Products. . . . . V1-**T4**-31

## D

Decorator Cover
Type CH Loadcenters and Circuit Breakers
Accessories. . . . . V1-**T1**-26

Digital Electronic Kilowatthour Meters
Marina Power and Lighting Equipment
Power Pedestals. . . . . V1-**T5**-81
RV Park Hook-Ups
Power Pedestals. . . . . V1-**T5**-44

Digital Electronic Meters
Marina Power and Lighting Equipment/RV Park Hook-Ups
Accessories. . . . . V1-**T5**-76

Direct Feed Kit
Mobile Home Panels
Accessories. . . . . V1-**T5**-23

Distribution Equipment—Ground Fault Monitor
Marina Power and Lighting Equipment
Power Pedestals. . . . . V1-**T5**-82

Distribution Equipment—MegaYacht Powerpoint
Marina Power and Lighting Equipment
Power Pedestals. . . . . V1-**T5**-83

Distribution Equipment—Panels
Marina Power and Lighting Equipment
Power Pedestals. . . . . V1-**T5**-89
Power Pedestals
RV Park Hook-Ups. . . . . V1-**T5**-49

Distribution Equipment—Substations
Marina Power and Lighting Equipment
Power Pedestals. . . . . V1-**T5**-86

Distribution Equipment—Transformers
Marina Power and Lighting Equipment
Power Pedestals. . . . . V1-**T5**-90

Distribution—Ground Fault Monitor
RV Park Hook-Ups
Power Pedestals . . . . . V1-**T5**-45

Distribution—Substations
RV Park Hook-Ups
Power Pedestals . . . . . V1-**T5**-46

Distribution—Transformers
RV Park Hook-Ups
Power Pedestals . . . . . V1-**T5**-50

Door Hasp
Marina Power and Lighting Equipment/RV Park Hook-Ups
Accessories . . . . . V1-**T5**-77

## E

Eaton Terms & Conditions . . . . . V1-**T1**-1
Freight . . . . . V1-**T1**-3
Limitation of Liability . . . . . V1-**T1**-5
Terms and Conditions of Sale . . . . . V1-**T1**-1
Terms of Payment . . . . . V1-**T1**-2
Warranty . . . . . V1-**T1**-3

Eaton's Green Line
Automatic Transfer Switches . . . . . V1-**T3**-11

Emergency Generator Panels
Manual Transfer Switches . . . . . V1-**T3**-16–V1-**T3**-18

Emergency Power Panels
Manual Transfer Switches . . . . . V1-**T3**-16

Enclosed Breakers
Loadcenters and Circuit Breakers . . . . . V1-**T1**-94–V1-**T1**-95

EUSERC Requirements Service Entrance Devices
Meter Breakers
Metering Products . . . . . V1-**T4**-48

External Cover
Marina Power and Lighting Equipment/RV Park Hook-Ups
Accessories . . . . . V1-**T5**-76

## F

Faceplate
Marina Power and Lighting Equipment/RV Park Hook-Ups
Accessories . . . . . V1-**T5**-75–V1-**T5**-77

Factory-Installed Surge Protection
Surge Protection Devices and Lightning Arresters . V1-**T2**-2, V1-**T2**-9

Field Installation and Parts
Type BR Loadcenters and Circuit Breakers
Accessories . . . . . V1-**T1**-61
Type CH Loadcenters and Circuit Breakers
Accessories . . . . . V1-**T1**-22

Filler Plates
Type BR Loadcenters and Circuit Breakers
Accessories . . . . . V1-**T1**-61

Fire Extinguisher
Marina Power and Lighting Equipment/RV Park Hook-Ups
Accessories . . . . . V1-**T5**-77

Firehouse
Marina Power and Lighting Equipment
Power Pedestals . . . . . V1-**T5**-73
RV Park Hook-Ups
Power Pedestals . . . . . V1-**T5**-42

Fluorescent Light Assembly
Marina Power and Lighting Equipment/RV Park Hook-Ups
Accessories . . . . . V1-**T5**-75

Fluorescent Light Kit
Temporary Power/RV Park
Accessories . . . . . V1-**T5**-7

Flush Flange Kit
Manual Transfer Switches . . . . . V1-**T3**-18

Flushmount Kit
Surge Protection Devices and Lightning Arresters . . . . V1-**T2**-6

Fully Automatic Transfer Switches
Automatic Transfer Switches . . . . . V1-**T3**-11

Fuse Holder
Marina Power and Lighting Equipment/RV Park Hook-Ups
Accessories . . . . . V1-**T5**-76

Fused, Unfused and Molded Case Switch
Air Conditioning Disconnects . . . . . V1-**T6**-2–V1-**T6**-10

## G

Goof Collars
Type CH Loadcenters and Circuit Breakers
Accessories . . . . . V1-**T1**-26

Ground Bar Kits
Type BR Loadcenters and Circuit Breakers
Accessories . . . . . V1-**T1**-66, V1-**T1**-93
Type CH Loadcenters and Circuit Breakers
Accessories . . . . . V1-**T1**-25

Ground Fault Receptacle
Air Conditioning Disconnects . . . . . V1-**T6**-5

Group Metering
Metering Products . . . . . V1-**T4**-88–V1-**T4**-149
Accessories . . . . . V1-**T4**-138, V1-**T4**-141
Commercial Meter Stack Modules . . . . . V1-**T4**-129
Main Service Modules . . . . . V1-**T4**-101
Main Tenant Circuit Breaker . V1-**T4**-96, V1-**T4**-98, V1-**T4**-127, V1-**T4**-136
Meter Packs . . . . . V1-**T4**-90
Phase Balanced Stack . . . . . V1-**T4**-128
Renewal Parts . . . . . V1-**T4**-140, V1-**T4**-142
Residential and Commercial Applications . . . . . V1-**T4**-88
Residential Meter Stacks . . . . . V1-**T4**-118
Surge Metering . . . . . V1-**T4**-115
Type CCV Tenant Main Circuit Breaker . . . . . V1-**T4**-95

Group Metering Inline Current Transformer Cabinets
Group Metering
Metering Products . . . . . V1-**T4**-116

## H

Handle Lockdogs
Type CH Loadcenters and Circuit Breakers
Accessories . . . . . V1-**T1**-38

Handle Lockoffs
Type BR Loadcenters and Circuit Breakers
Accessories . . . . . V1-**T1**-85

Type CH Loadcenters and Circuit Breakers
Accessories . . . . . V1-**T1**-38

Handle Ties
Accessories
Type CH Loadcenters and Circuit Breakers . . . . . V1-**T1**-38
Type BR Loadcenters and Circuit Breakers
Accessories . . . . . V1-**T1**-85

Hatteras Light
Marina Power and Lighting Equipment
Power Pedestals . . . . . V1-**T5**-69

Hold-Down Kits
Type BR Loadcenters and Circuit Breakers
Accessories . . . . . V1-**T1**-85

Hose and Cable Brackets
Marina Power and Lighting Equipment/RV Park Hook-Ups
Accessories . . . . . V1-**T5**-75

House Panels
Meter Breakers
Accessories . . . . . V1-**T4**-77
Metering Products . . . . . V1-**T4**-75


## I


Instrument Rated Sockets
Metering Products . . . . . V1-**T4**-25, V1-**T4**-26

Isolation Plate
Marina Power and Lighting Equipment/RV Park Hook-Ups
Accessories . . . . . V1-**T5**-75


## L


Lens
Marina Power and Lighting Equipment/RV Park Hook-Ups
Accessories . . . . . V1-**T5**-77

Life Ring
Marina Power and Lighting Equipment/RV Park Hook-Ups
Accessories . . . . . V1-**T5**-77

Light and Lens Assembly
Marina Power and Lighting Equipment/RV Park Hook-Ups
Accessories . . . . . V1-**T5**-75

Light Fuse
Marina Power and Lighting Equipment/RV Park Hook-Ups
Accessories . . . . . V1-**T5**-76, V1-**T5**-77

Light Holder
Marina Power and Lighting Equipment/RV Park Hook-Ups
Accessories . . . . . V1-**T5**-77

Lighthouse
Marina Power and Lighting Equipment
Power Pedestals . . . . . V1-**T5**-54

Lighthouse—SS
Marina Power and Lighting Equipment
Power Pedestals . . . . . V1-**T5**-58

Liquid Cooled Generator
Standby Generator . . . . . V1-**T3**-4

Liquid Cooled Standby
Standby Generator System . . . . . V1-**T3**-2

Loadcenter Interiors/OEM Loadcenters
Loadcenters and Circuit Breakers . . . . . V1-**T1**-89–V1-**T1**-93

Loadcenters and Circuit Breakers . V1-**T1**-1–V1-**T1**-95, V1-**T1**-97–V1-**T1**-100
Classified Circuit Breakers . . . . . V1-**T1**-96–V1-**T1**-100
Accessories . . . . . V1-**T1**-99
Type CH Replacement Breakers . . . . . V1-**T1**-97
Enclosed Breakers . . . . . V1-**T1**-94–V1-**T1**-95
Loadcenter Interiors/OEM Loadcenters . . . V1-**T1**-89–V1-**T1**-93
Type BR . . . . . V1-**T1**-42–V1-**T1**-70
Accessories . . . . . V1-**T1**-61
BR Specialty Products
BR Circuit Breakers . . . . . V1-**T1**-76
BR Quick Connect Neutral Loadcenters . . . . . V1-**T1**-57
Riser Panel . . . . . V1-**T1**-59
Spa Panels . . . . . V1-**T1**-58
Type BR Renovation Loadcenter . . . . . V1-**T1**-60
Type BR Retrofit Interior Kits . . . . . V1-**T1**-73
Common Trip Quadplex Breakers . . . . . V1-**T1**-83
Convertible Loadcenters MCB . . . . . V1-**T1**-51
Convertible Loadcenters MLO . . . . . V1-**T1**-51
Plug-On Circuit Breakers . . . . . V1-**T1**-76
Quick-Pro . . . . . V1-**T1**-60
Single-Phase . . . . . V1-**T1**-48
Three-Phase . . . . . V1-**T1**-54
Type CH . . . . . V1-**T1**-2–V1-**T1**-28
Accessories . . . . . V1-**T1**-22
CH Circuit Breakers . . . . . V1-**T1**-31
CH Specialty Products
Non-Metallic Loadcenter . . . . . V1-**T1**-21
Plug-On Neutral Loadcenter . . . . . V1-**T1**-17
Spa Panels . . . . . V1-**T1**-14
Surge Panel . . . . . V1-**T1**-15
Type CH Renovation Loadcenter . . . . . V1-**T1**-18
Type CH Retrofit Interior Kits . . . . . V1-**T1**-19
Convertible Loadcenters MCB . . . . . V1-**T1**-11
Convertible Loadcenters MLO . . . . . V1-**T1**-11
Single-Phase . . . . . V1-**T1**-7
Three-Phase . . . . . V1-**T1**-12


## M


Main and Sub-Feed Lug Blocks
Type BR Loadcenters and Circuit Breakers
Accessories . . . . . V1-**T1**-61

Main Breaker Lug Kits
Type BR Loadcenters and Circuit Breakers
Accessories . . . . . V1-**T1**-85
Type CH Loadcenters and Circuit Breakers
Accessories . . . . . V1-**T1**-38

Main Door
Marina Power and Lighting Equipment/RV Park Hook-Ups
Accessories . . . . . V1-**T5**-75, V1-**T5**-77

Main Housing
Marina Power and Lighting Equipment/RV Park Hook-Ups
Accessories . . . . . V1-**T5**-75–V1-**T5**-77

Main Lugs
Type BR Loadcenters and Circuit Breakers
Accessories . . . . . V1-**T1**-61

Main Service Modules
Group Metering
Metering Products . . . . . V1-**T4**-101

Main Tenant Circuit Breaker
Group Metering
Metering Products V1-**T4**-96, V1-**T4**-98, V1-**T4**-127, V1-**T4**-136

Manual Transfer Switches . . . . . V1-**T3**-16–V1-**T3**-19
Emergency Generator Panels . . . . . V1-**T3**-16
Emergency Power Panels . . . . . V1-**T3**-16
Generator Panels . . . . . V1-**T3**-18
Indoor and Outdoor Designs . . . . . V1-**T3**-17
Indoor and Outdoor Designs . . . . . V1-**T3**-16
Standard Manual Transfer Switch . . . . . V1-**T3**-18
Switched Neutral Manual Transfer Switch . . . . . V1-**T3**-18

Marina Power and Lighting Equipment
Power Pedestals . . . . . V1-**T5**-2, V1-**T5**-51–V1-**T5**-90
Admiral—SS . . . . . V1-**T5**-62
Digital Electronic Kilowatthour Meters . . . . . V1-**T5**-81
Distribution Equipment—Ground Fault Monitor . . . . V1-**T5**-82
Distribution Equipment—MegaYacht Powerpoint . . V1-**T5**-83
Distribution Equipment—Panels . . . . . V1-**T5**-89
Distribution Equipment—Substations . . . . . V1-**T5**-86
Distribution Equipment—Transformers . . . . . V1-**T5**-90
Firehouse . . . . . V1-**T5**-73
Hatteras Light . . . . . V1-**T5**-69
Lighthouse . . . . . V1-**T5**-54
Lighthouse—SS . . . . . V1-**T5**-58
Mariner . . . . . V1-**T5**-80
Newport Harbor Mate . . . . . V1-**T5**-65
Smart Start . . . . . V1-**T5**-79

Marina Power and Lighting Equipment/RV Park Hook-Ups
Power Pedestals
Accessories . . . . . V1-**T5**-75

Mariner
Marina Power and Lighting Equipment
Power Pedestals . . . . . V1-**T5**-80

Mechanical Interlock Cover
Metering Products
Meter Breakers . . . . . V1-**T4**-65

Mechanical Interlock Covers
Type BR Loadcenters and Circuit Breakers
Accessories . . . . . V1-**T1**-64
Type CH Loadcenters and Circuit Breakers
Accessories . . . . . V1-**T1**-23

Mechanical Interlocks
Type BR Loadcenters and Circuit Breakers
Accessories . . . . . V1-**T1**-86
Type CH Loadcenters and Circuit Breakers
Accessories . . . . . V1-**T1**-23, V1-**T1**-38

Mechanical Lugs
Metering Products . . . . . V1-**T4**-34

Meter Breakers
Metering Products . . . . . V1-**T4**-37–V1-**T4**-87
Accessories . . . . . V1-**T4**-77
Aluminum Meter Breakers . . . . . V1-**T4**-87
CH Style Renovation Solutions . . . . . V1-**T4**-86
Commercial Safety Sockets . . . . . V1-**T4**-83
EUSERC Requirements Service Entrance Devices . V1-**T4**-48
House Panels . . . . . V1-**T4**-75
Mechanical Interlock Cover . . . . . V1-**T4**-65
Non-EUSERC Combination Service Entrance Devices . V1-**T4**-39
Residential Meter Breakers . . . . . V1-**T4**-37
West Coast All-In-One Design . . . . . V1-**T4**-59

Meter Packs
Group Metering
Metering Products . . . . . V1-**T4**-90

Metering Products . . . . . V1-**T4**-1–V1-**T4**-149
Commercial Lever Bypass Sockets . . . . . V1-**T4**-10–V1-**T4**-17
Communications Grounding Device . . . . . V1-**T4**-35, V1-**T4**-36
Cross-Reference . . . . . V1-**T4**-31
Group Metering . . . . . V1-**T4**-88–V1-**T4**-149
Accessories. . . V1-**T4**-117, V1-**T4**-138, V1-**T4**-139, V1-**T4**-141
Commercial Meter Stack Modules . . . . . V1-**T4**-129
Group Metering Inline Current Transformer Cabinets . V1-**T4**-116
Main Service Modules . . . . . V1-**T4**-101
Main Tenant Circuit Breaker . V1-**T4**-96, V1-**T4**-98, V1-**T4**-127, V1-**T4**-136
Meter Packs . . . . . V1-**T4**-90
Phase Balanced Stack . . . . . V1-**T4**-128
Renewal Parts . . . . . V1-**T4**-140, V1-**T4**-142
Residential and Commercial Applications . . . . . V1-**T4**-88
Residential Meter Stacks . . . . . V1-**T4**-118
Surge Metering . . . . . V1-**T4**-115
Type CCV Tenant Main Circuit Breaker . . . . . V1-**T4**-95
Instrument Rated Sockets . . . . . V1-**T4**-25, V1-**T4**-26
Mechanical Lugs . . . . . V1-**T4**-34
Meter Breakers . . . . . V1-**T4**-37–V1-**T4**-87
Accessories . . . . . V1-**T4**-77
Aluminum Meter Breakers . . . . . V1-**T4**-87
CH Style Renovation Solutions . . . . . V1-**T4**-86
Commercial Safety Sockets . . . . . V1-**T4**-83
EUSERC Requirements Service Entrance Devices . . V1-**T4**-48
House Panels . . . . . V1-**T4**-75
Mechanical Interlock Cover . . . . . V1-**T4**-65
Non-EUSERC Combination Service Entrance Devices . V1-**T4**-39
Residential Meter Breakers . . . . . V1-**T4**-37
West Coast All-In-One Design . . . . . V1-**T4**-59
Meter Socket Accessories
Accessories . . . . . V1-**T4**-30
Multiple Position Horizontal Ganged Sockets . V1-**T4**-18–V1-**T4**-24
Residential Pedestals . . . . . V1-**T4**-27, V1-**T4**-28
Single Meter Sockets . . . . . V1-**T4**-2–V1-**T4**-9
Residential Ringless Type Cover . . . . . V1-**T4**-4

Mobile Home Panels
Accessories
Power Pedestals . . . . . V1-**T5**-23
Power Pedestals . . . . . V1-**T5**-2, V1-**T5**-21–V1-**T5**-27

Molded Case Switch
Air Conditioning Disconnects . . . . . V1-**T6**-2, V1-**T6**-4

Mounting Bases
Type CH Loadcenters and Circuit Breakers
Accessories . . . . . V1-**T1**-38

Mounting Brackets
Marina Power and Lighting Equipment/RV Park Hook-Ups
Accessories . . . . . V1-**T5**-77

Mounting Feet
Marina Power and Lighting Equipment/RV Park Hook-Ups
Accessories . . . . . V1-**T5**-76

Multiple Position Horizontal Ganged Sockets
Metering Products . . . . . V1-**T4**-18–V1-**T4**-24

## N

Neutral Bar Accessories
Type CH Loadcenters and Circuit Breakers
Accessories . . . . . V1-**T1**-25

Newport Camp Mate Power Pedestal
RV Park Hook-Ups
Power Pedestals . . . . . V1-**T5**-36

Newport Harbor Mate
Marina Power and Lighting Equipment
Power Pedestals . . . . . V1-**T5**-65

Non-EUSERC Combination Service Entrance Devices
Metering Products
Meter Breakers . . . . . V1-**T4**-39

Non-Metallic Loadcenter
CH Specialty Products
Type CH
Loadcenters and Circuit Breakers . . . . . V1-**T1**-21

## O

Outdoor Communication Grounding Device
Surge Protection Devices and Lightning Arresters . . . . V1-**T2**-6

## P

Padlock Brackets
Type BR Loadcenters and Circuit Breakers
Accessories . . . . . V1-**T1**-86

Padmount Adapter
Mobile Home Panels
Accessories . . . . . V1-**T5**-23

Pad-Mount Bracket
Temporary Power/RV Park
Accessories . . . . . V1-**T5**-7

Park Light Power Pedestal
RV Park Hook-Ups
Power Pedestals . . . . . V1-**T5**-39

Pedestal Extension
Mobile Home Panels
Accessories . . . . . V1-**T5**-23
Temporary Power/RV Park
Accessories . . . . . V1-**T5**-7

Pedestal Units
Temporary Power/RV Park
Power Pedestals . . . . . V1-**T5**-16

Phase Adapters
Type CH Loadcenters and Circuit Breakers
Accessories . . . . . V1-**T1**-25

Phase Balanced Stack
Group Metering
Metering Products . . . . . V1-**T4**-128

Phone, Cable, Internet Assemblies
Marina Power and Lighting Equipment/RV Park Hook-Ups
Accessories. . . . . V1-**T5**-76

Plug-On Circuit Breakers
Type BR
Loadcenters and Circuit Breakers . . . . . V1-**T1**-76

Plug-On Neutral Loadcenter
CH Specialty Products
Type CH
Loadcenters and Circuit Breakers . . . . . V1-**T1**-17

Plug-On Surge Protection
Surge Protection Devices and Lightning Arrester . . . . . V1-**T2**-3

Portable Generators
Residential Standby Backup Power Solutions V1-**T3**-7–V1-**T3**-10

Power Inlet Box
Manual Transfer Switches . . . . . V1-**T3**-18

Power Outlet Panels
Power Pedestals . . . . . V1-**T5**-2

Power Pedestals . . . . . V1-**T5**-1–V1-**T5**-90
Marina Power and Lighting Equipment . V1-**T5**-2, V1-**T5**-51–V1-**T5**-90
Admiral—SS . . . . . V1-**T5**-62
Digital Electronic Kilowatthour Meters . . . . . V1-**T5**-81
Distribution Equipment—Ground Fault Monitor . . . . V1-**T5**-82
Distribution Equipment—MegaYacht Powerpoint . . V1-**T5**-83
Distribution Equipment—Panels . . . . . V1-**T5**-89
Distribution Equipment—Substations. . . . . V1-**T5**-86
Distribution Equipment—Transformers . . . . . V1-**T5**-90
Firehouse . . . . . V1-**T5**-73
Hatteras Light . . . . . V1-**T5**-69
Lighthouse . . . . . V1-**T5**-54
Lighthouse—SS . . . . . V1-**T5**-58
Mariner . . . . . V1-**T5**-80
Newport Harbor Mate. . . . . V1-**T5**-65
Smart Start . . . . . V1-**T5**-79
Marina Power and Lighting Equipment/RV Park Hook-Ups
Accessories. . . . . V1-**T5**-75
Mobile Home Panels . . . . . V1-**T5**-2, V1-**T5**-21–V1-**T5**-27
Accessories. . . . . V1-**T5**-23
Power Outlet Panels . . . . . V1-**T5**-2
RV Park Hook-Ups . . . . . V1-**T5**-28–V1-**T5**-50
Digital Electronic Kilowatthour Meters . . . . . V1-**T5**-44
Distribution Equipment—Panels . . . . . V1-**T5**-49
Distribution—Ground Fault Monitor . . . . . V1-**T5**-45
Distribution—Substations . . . . . V1-**T5**-46
Distribution—Transformers. . . . . V1-**T5**-50
Firehouse . . . . . V1-**T5**-42
Newport Camp Mate Power Pedestal . . . . . V1-**T5**-36
Park Light Power Pedestal . . . . . V1-**T5**-39
Powerhouse Power Pedestal . . . . . V1-**T5**-30
Powerhouse Stainless Steel Power Pedestal. . . . . V1-**T5**-33
Temporary Power/RV Park. . . . . V1-**T5**-3–V1-**T5**-20
Accessories. . . . . V1-**T5**-7
Pedestal Units. . . . . V1-**T5**-16
Surface Units . . . . . V1-**T5**-10

Powerhouse Power Pedestal
RV Park Hook-Ups
Power Pedestals . . . . . V1-**T5**-30

Powerhouse Stainless Steel Power Pedestal
RV Park Hook-Ups
Power Pedestals . . . . . V1-**T5**-33

Pullouts, Fused and Non-Fused
Air Conditioning Disconnects . . . . . V1-**T6**-2, V1-**T6**-4

## Q

Quick Connect Design
Surge Protection Devices and Lightning Arresters . . . . V1-**T2**-6

Quick-Pro
Type BR
Loadcenters and Circuit Breakers . . . . . V1-**T1**-60

## R

Rainproof Conduit Hub
Temporary Power/RV Park
Accessories . . . . . V1-**T5**-7

Rainproof Conduit Hubs
Type BR Loadcenters and Circuit Breakers
Accessories . . . . . V1-**T1**-66
Type CH Loadcenters and Circuit Breakers
Accessories . . . . . V1-**T1**-25

Raintight Enclosure
Surge Protection Devices and Lightning Arresters . . . . V1-**T2**-6

Receptacles
Marina Power and Lighting Equipment/RV Park Hook-Ups
Accessories . . . . . V1-**T5**-75

Renewal Parts
Group Metering
Metering Products . . . . . V1-**T4**-140, V1-**T4**-142
Temporary Power/RV Park
Accessories . . . . . V1-**T5**-8

Residential and Commercial Applications
Group Metering
Metering Products . . . . . V1-**T4**-88

Residential Meter Breakers
Meter Breakers
Metering Products . . . . . V1-**T4**-37

Residential Meter Stacks
Group Metering
Metering Products . . . . . V1-**T4**-118

Residential Pedestals
Metering Products . . . . . V1-**T4**-27, V1-**T4**-28

Residential Ringless Type Cover
Single Meter Sockets
Metering Products . . . . . V1-**T4**-4

Residential Standby Backup Power Solutions. . . . V1-**T3**-1–V1-**T3**-15
Automatic Transfer Switches . . . . . V1-**T3**-11–V1-**T3**-15
Manual Transfer Switches . . . . . V1-**T3**-16–V1-**T3**-19
Portable Generators . . . . . V1-**T3**-7–V1-**T3**-10
Standby Generator . . . . . V1-**T3**-2–V1-**T3**-6

Riser Panel
BR Specialty Products
Type BR
Loadcenters and Circuit Breakers . . . . . V1-**T1**-59

RV Park Hook-Ups
Power Pedestals . . . . . V1-**T5**-28–V1-**T5**-50
Digital Electronic Kilowatthour Meters . . . . . V1-**T5**-44
Distribution Equipment—Panels. . . . . V1-**T5**-49
Distribution—Ground Fault Monitor . . . . . V1-**T5**-45
Distribution—Substations . . . . . V1-**T5**-46
Distribution—Transformers. . . . . V1-**T5**-50
Firehouse . . . . . V1-**T5**-42
Newport Camp Mate Power Pedestal . . . . . V1-**T5**-36
Park Light Power Pedestal . . . . . V1-**T5**-39
Powerhouse Power Pedestal . . . . . V1-**T5**-30
Powerhouse Stainless Steel Power Pedestal. . . . . V1-**T5**-33

## S

Safety Sockets, Commercial
Meter Breakers
Metering Products . . . . . V1-**T4**-83

Service Entrance Surge Protection
Surge Protection Devices and Lightning Arresters . . . . V1-**T2**-2

Shunt Trip
Type BR Loadcenters and Circuit Breakers
Accessories. . . . . V1-**T1**-86
Type CH Loadcenters and Circuit Breakers
Accessories. . . . . V1-**T1**-39

Single Meter Sockets
Metering Products. . . . . V1-**T4**-2–V1-**T4**-9
Residential Ringless Type Cover. . . . . V1-**T4**-4

Single-Phase
Type BR
Loadcenters and Circuit Breakers. . . . . V1-**T1**-48
Type CH
Loadcenters and Circuit Breakers. . . . . V1-**T1**-7

Smart Start
Marina Power and Lighting Equipment
Power Pedestals. . . . . V1-**T5**-79

Spa Panels
BR Specialty Products
Type BR
Loadcenters and Circuit Breakers . . . . . V1-**T1**-58
CH Specialty Products
Type CH
Loadcenters and Circuit Breakers . . . . . V1-**T1**-14
Type BR. . . . . V1-**T1**-58

Spring Closure
Marina Power and Lighting Equipment/RV Park Hook-Ups
Accessories. . . . . V1-**T5**-75

Standard Manual Transfer Switch
Manual Transfer Switches. . . . . V1-**T3**-18

Standby Generator. . . . . V1-**T3**-2–V1-**T3**-6
Air Cooled Generators . . . . . V1-**T3**-3
Liquid Cooled Generators . . . . . V1-**T3**-4

Standby Generator System
Air Cooled Standby . . . . . V1-**T3**-2
Liquid Cooled Standby. . . . . V1-**T3**-2

Strobe Light
Marina Power and Lighting Equipment/RV Park Hook-Ups
Accessories . . . . . V1-**T5**-77

Surface Units
Temporary Power/RV Park
Power Pedestals . . . . . V1-**T5**-10

Surge Installed Loadcenters
Surge Protection Devices and Lightning Arrester . . . . . V1-**T2**-9

Surge Metering
Group Metering
Metering Products . . . . . V1-**T4**-115

Surge Panel
CH Specialty Products
Type CH
Loadcenters and Circuit Breakers . . . . . V1-**T1**-15

Surge Protection . . . . . V1-**T2**-1–V1-**T2**-10
Factory-Installed Surge Protection . . . . . V1-**T2**-2, V1-**T2**-9
Plug-On Surge Protection . . . . . V1-**T2**-3
Type 3 Point-of-Use Surge Protection . . . . . V1-**T2**-3
Type BRSURGE . . . . . V1-**T2**-3
Type BRSURGECSA. . . . . V1-**T2**-3
Type CHQSA . . . . . V1-**T2**-3
Type CHSA. . . . . V1-**T2**-3
Service Entrance . . . . . V1-**T2**-2
Surge Installed Loadcenters . . . . . V1-**T2**-9
Surge Protection Devices and Lightning Arresters . V1-**T2**-2–V1-**T2**-10
Surge Ready Loadcenter. . . . . V1-**T2**-2, V1-**T2**-9
Two-Stage Protection . . . . . V1-**T2**-2, V1-**T2**-3
UL 1449 3rd Edition Surge Protection
Type 1. . . . . V1-**T2**-2
Type 1 CHSP . . . . . V1-**T2**-4
Type 2. . . . . V1-**T2**-2
Type 2 Plug-On. . . . . V1-**T2**-10
UL 1449 3rd Edition, cUL
Type 2 CHSP Service Entrance . . . . . V1-**T2**-5

Surge Protection Devices and Lightning Arresters V1-**T2**-2–V1-**T2**-10
Surge Protection Receptacles with LED Indicators and Audible Alarm . . . . . V1-**T2**-8
Type BR and CH Surge Breakers . . . . . V1-**T2**-7

Surge Protection Receptacles with LED Indicators and Audible Alarm
Surge Protection Devices and Lightning Arresters . . . . V1-**T2**-8

Surge Ready
Type CH
Loadcenters and Circuit Breakers . . . . . V1-**T1**-16

Surge Ready Loadcenter. . . . . V1-**T2**-9
Surge Protection Devices and Lightning Arresters . . . . V1-**T2**-2

Switched Neutral Manual Transfer Switch
Manual Transfer Switches . . . . . V1-**T3**-18


## T


Temporary Power/RV Park
Power Pedestals . . . . . V1-**T5**-3–V1-**T5**-20
Accessories . . . . . V1-**T5**-7
Pedestal Units . . . . . V1-**T5**-16
Surface Units . . . . . V1-**T5**-10

Three-Phase
Type BR
Loadcenters and Circuit Breakers . . . . . V1-**T1**-54
Type CH
Loadcenters and Circuit Breakers . . . . . V1-**T1**-12

Transfer Panels
Manual Transfer Switches . . . . . V1-**T3**-16

Two-Stage Protection
Surge Protection Devices and Lightning Arresters V1-**T2**-2, V1-**T2**-3

Type 1 Surge Protective Device
Surge Protection Devices and Lightning Arresters . . . . V1-**T2**-2

Type 2 Surge Protective Device
Surge Protection Devices and Lightning Arresters . . . . V1-**T2**-2

Type 3 Point-of-Use Surge Protection
Surge Protection Devices and Lightning Arresters . . . . V1-**T2**-3

Type BR
Loadcenters and Circuit Breakers . . . . . V1-**T1**-42–V1-**T1**-70
Accessories. . . . . V1-**T1**-61
BR Specialty Products
BR Circuit Breakers . . . . . V1-**T1**-76
BR Quick Connect Neutral Loadcenters. . . . . V1-**T1**-57
Riser Panel . . . . . V1-**T1**-59
Spa Panels . . . . . V1-**T1**-58
Type BR Renovation Loadcenter . . . . . V1-**T1**-60
Type BR Retrofit Interior Kits . . . . . V1-**T1**-73
Common Trip Quadplex Breakers. . . . . V1-**T1**-83
Convertible Loadcenters MCB . . . . . V1-**T1**-51
Convertible Loadcenters MLO . . . . . V1-**T1**-51
Plug-On Circuit Breakers. . . . . V1-**T1**-76
Quick-Pro . . . . . V1-**T1**-60
Single-Phase . . . . . V1-**T1**-48
Spa Panels . . . . . V1-**T1**-58
Three-Phase . . . . . V1-**T1**-54

Type BR and CH Surge Breakers
Surge Protection Devices and Lightning Arresters . . . . V1-**T2**-7

Type BR Renovation Loadcenter
BR Specialty Products
Type BR
Loadcenters and Circuit Breakers . . . . . V1-**T1**-60

Type BR Retrofit Interior Kits
BR Specialty Products
Type BR
Loadcenters and Circuit Breakers . . . . . V1-**T1**-73

Type BRSURGE Surge Protection
Surge Protection Devices and Lightning Arresters . . . . V1-**T2**-3

Type CCV Tenant Main Circuit Breaker
Group Metering
Metering Products . . . . . V1-**T4**-95

Type CH. . . . . V1-**T1**-16
Loadcenters and Circuit Breakers . . . . . V1-**T1**-2–V1-**T1**-28
Accessories. . . . . V1-**T1**-22
CH Circuit Breakers. . . . . V1-**T1**-31
CH Specialty Products
Non-Metallic Loadcenter . . . . . V1-**T1**-21
Plug-On Neutral Loadcenter. . . . . V1-**T1**-17
Spa Panels . . . . . V1-**T1**-14

Surge Panel . . . . . V1-**T1**-15
Type CH Renovation Loadcenter . . . . . V1-**T1**-18
Type CH Retrofit Interior Kits . . . . . V1-**T1**-19
Convertible Loadcenters MCB . . . . . V1-**T1**-11
Convertible Loadcenters MLO . . . . . V1-**T1**-11
Single-Phase . . . . . V1-**T1**-7
Surge Ready . . . . . V1-**T1**-16
Three-Phase . . . . . V1-**T1**-12

Type CH Renovation Loadcenter
CH Specialty Products
Type CH
Loadcenters and Circuit Breakers . . . . . V1-**T1**-18

Type CH Replacement Breakers
Classified Circuit Breakers
Loadcenters and Circuit Breakers . . . . . V1-**T1**-97

Type CH Retrofit Interior Kits
CH Specialty Products
Type CH
Loadcenters and Circuit Breakers . . . . . V1-**T1**-19

Type CHQSA Surge Protection
Surge Protection Devices and Lightning Arresters . . . . V1-**T2**-3

Type CHSA Surge Protection
Surge Protection Devices and Lightning Arresters . . . . V1-**T2**-3

## U

UL 1449 3rd Edition
Surge Protection Devices and Lightning Arrester . . . . . V1-**T2**-2

## W

Water Assemblies
Marina Power and Lighting Equipment/RV Park Hook-Ups
Accessories . . . . . V1-**T5**-76

West Coast All-In-One Design
Meter Breakers
Accessories . . . . . V1-**T4**-60
Metering Products . . . . . V1-**T4**-59

## Numerics

3-Pack
Surge Protection Devices and Lightning Arresters V1-**T2**-6