Electrical Sector Solutions

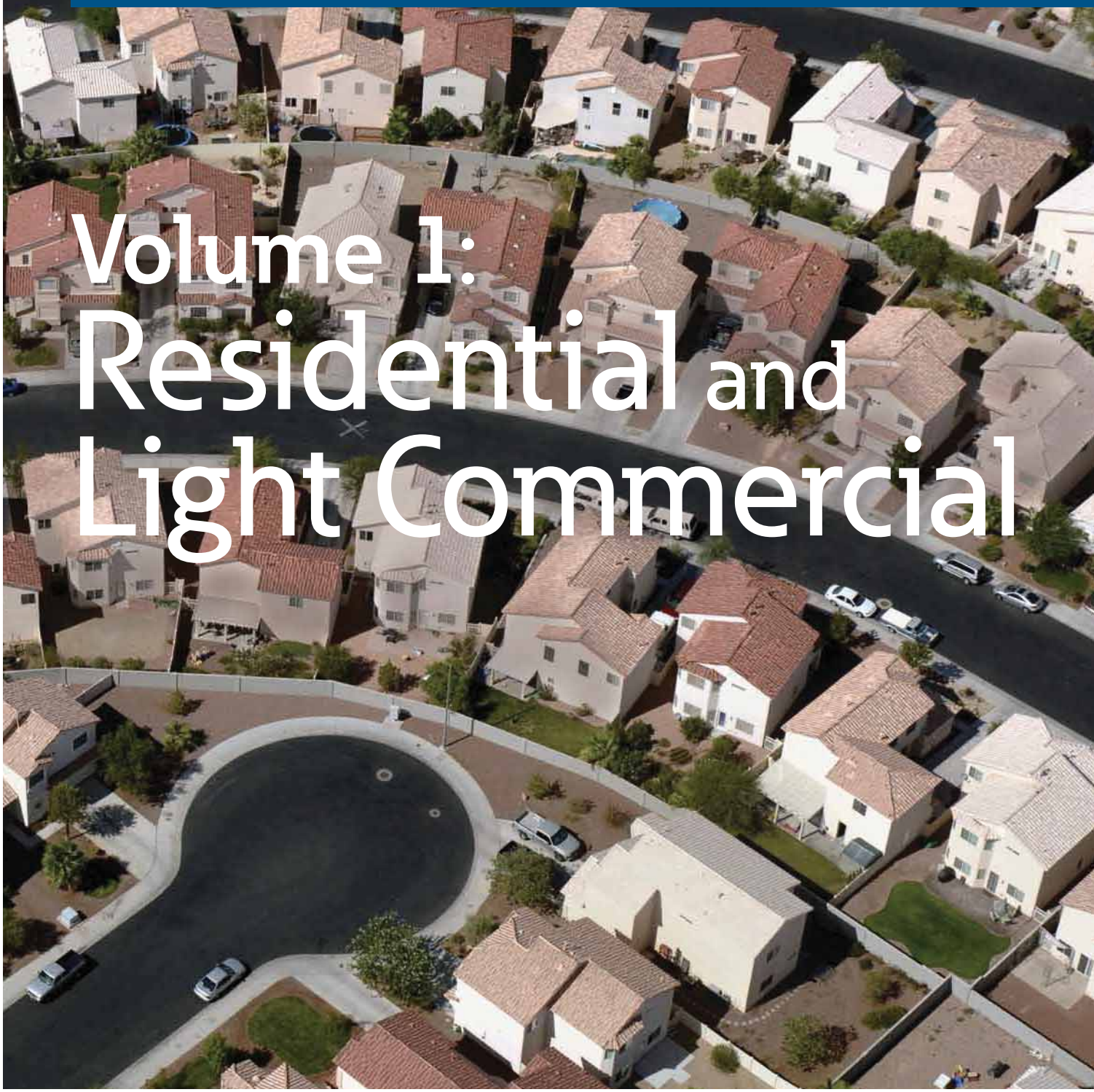

Volume 1: Residential and Light Commercial

Powering Business Worldwide

Volume 1—Residential and Light Commercial

1

Tab 1—Loadcenters and Circuit Breakers V1-T1-1

Tab 2—Surge Protection V1-T2-1

Tab 3—Residential Standby Backup Power Solutions V1-T3-1

Tab 4—Metering Products V1-T4-1

Tab 5—Power Pedestals V1-T5-1

Tab 6—Air Conditioning Disconnects V1-T6-1

Appendix 1—Eaton Terms & Conditions V1-A1-1

Appendix 2—Catalog Parent Number Index V1-A2-1

Appendix 3—Alphabetical Product Index V1-A3-1

Copyright

Dimensions, Weights and Ratings

Dimensions, weights and ratings given in this catalog **are approximate and should not be used for construction purposes**. Drawings containing exact dimensions are available upon request. All listed product specifications and ratings are subject to change without notice. Photographs are representative of production units.

Terms and Conditions

All prices and discounts are subject to change without notice. When price changes occur, they are published in Eaton's *Price and Availability Digest* (PAD). All orders accepted by Eaton's Electrical Sector are subject to the general terms and conditions as set forth in Appendix 1—Eaton Terms & Conditions.

Technical and Descriptive Publications

This catalog contains brief technical data for proper selection of products. Further information is available in the form of technical information publications and illustrated brochures. If additional product information is required, contact your local Eaton Products Distributor, call **1-800-525-2000** or visit our website at **www.eaton.com**.

Compliance with Nuclear Regulation 10 CFR 21

Eaton products are sold as commercial grade products not intended for application in facilities or activities licensed by the United States Nuclear Regulatory Commission for atomic purposes, under 10 CFR 21. Further certification will be required for use of these products in a safety-related application in any nuclear facility licensed by the U.S. Nuclear Regulatory Commission.

WARNING

The installation and use of Eaton products should be in accordance with the provisions of the U.S. National Electrical Code® and/or other local codes or industry standards that are pertinent to the particular end use. Installation or use not in accordance with these codes and standards could be hazardous to personnel and/or equipment.

These catalog pages do not purport to cover all details or variations in equipment, nor to provide for every possible contingency to be met in connection with installation, operation or maintenance. Should further information be desired or should particular problems arise which are not covered sufficiently for the purchaser's purposes, the matter should be referred to the local Eaton Products Distributor or Sales Office. The contents of this catalog shall not become part of or modify any prior or existing agreement, commitment or relationship. The sales contract contains the entire obligation of Eaton's Electrical Sector. The warranty contained in the contract between the parties is the sole warranty of Eaton. Any statements contained herein do not create new warranties or modify the existing warranty.

Copyright ©2015 Eaton, All Rights Reserved.

Powering Business Worldwide

Eaton is a global leader in power distribution, power quality, control and automation, and monitoring products.

At Eaton, we believe a reliable, efficient and safe power system is the foundation of every successful enterprise. Through innovative technologies, cutting-edge products and our highly skilled services team, we empower businesses around the world to achieve a powerful advantage.

In addition, Eaton is committed to creating and maintaining powerful customer relationships built on a foundation of excellence. From the products we manufacture to our dedicated customer service and support, we know what's important to you.

Solutions

Eaton takes the complexity out of power systems management with a holistic and strategic approach, leveraging our industry-leading technology, solutions and services. We focus on the following three areas in all we do:

- Reliability—maintain the appropriate level of power continuity without disruption or unexpected downtime
- Efficiency—minimize energy usage, operating costs, equipment footprint and environmental impact
- Safety—identify and mitigate electrical hazards to protect what you value most

Using the Eaton Catalog Library

As we grow, it becomes increasingly difficult to include all products in one or two comprehensive catalogs. Knowing that each user has their specific needs, we have created a library of catalogs for our products that when complete, will contain 15 volumes. Since the volumes will continuously be a work in progress and updated, each volume will stand alone. Refer to our volume directory, MZ08100001E, for a quick glance of where to look for the products you need. The 15 volumes include:

- Volume 1—Residential and Light Commercial (CA08100002E)
- Volume 2—Commercial Distribution (CA08100003E)
- Volume 3—Power Distribution and Control Assemblies (CA08100004E)
- Volume 4—Circuit Protection (CA08100005E)
- Volume 5—Motor Control and Protection (CA08100006E)
- Volume 6—Solid-State Motor Control (CA08100007E)
- Volume 7—Logic Control, Operator Interface and Connectivity Solutions (CA08100008E)
- Volume 8—Sensing Solutions (CA08100010E)
- Volume 9—Original Equipment Manufacturer (CA08100011E)
- Volume 10—Enclosed Control (CA08100012E)
- Volume 11—Vehicle and Commercial Controls (CA08100013E)
- Volume 12—Aftermarket, Renewal Parts and Life Extension Solutions (CA08100014E)
- Volume 13—Counters, Timers and Tachometers (CA08100015E)—Available in electronic format only
- Volume 14—Fuses (CA08100016E)—Available in electronic format only
- Volume 15—Solar Inverters and Electrical Balance of System (CA08100018E)

These volumes are not all-inclusive of every product, but they are meant to be an overview of our product lines. For our full range of product solutions and additional product information, consult Eaton.com/electrical and other catalogs and product guides in our literature library. These references include:

- The Consulting Application Guide (CA08104001E)
- The Eaton Power Quality Product Guide (COR01FYA)

If you don't have the volume that contains the product or information that you are looking for, not to worry. You can access every volume of the catalog library at Eaton.com/electrical in the Literature Library.

By installing our Automatic Tab Updater (ATU), you can be sure you always have the most recent version of each volume and tab.

Icons

Green Leaf

Eaton Green Solutions are products, systems or solutions that represent Eaton benchmarks for environmental performance. The green leaf symbol is our promise that the solution has been reviewed and documented as offering exceptional, industry-leading environmental benefits to customers, consumers and our communities. Though all of Eaton's products and solutions are designed to meet or exceed applicable government standards related to protecting the environment, our products with the Green Leaf designation further provide "exceptional environmental benefit."

Learn Online

When you see the Learn Online icon, go to Eaton.com/electrical and search for the product or training page. There you will find 100-level training courses, podcasts, webcasts or games and puzzles to learn more.

Drawings Online

When you see the Drawings Online icon, go to Eaton.com/electrical and find the products page. There you will find a tab that includes helpful product drawings and illustrations.

Contact Us

If you need additional help, you can find contact information under the Customer Care heading of Eaton.com/electrical.

Loadcenters and Circuit Breakers

Residential Loadcenters and Breaker Family

1.1 Type CH Loadcenters and Circuit Breakers

Overview V1-T1-2
Single-Phase V1-T1-7
Three-Phase V1-T1-12
CH Specialty Products V1-T1-14
Spa Panels V1-T1-14
Surge Panel V1-T1-15
Plug-On Neutral Loadcenter V1-T1-17
Type CH Renovation Loadcenter V1-T1-18
Type CH Retrofit Interior Kits V1-T1-19
Non-Metallic Loadcenter V1-T1-21
CH Circuit Breakers V1-T1-31

1.2 Type BR Loadcenters and Circuit Breakers

Overview V1-T1-42
Single-Phase V1-T1-48
Three-Phase V1-T1-54
BR Specialty Products V1-T1-57
BR Quick Connect Neutral Loadcenters V1-T1-57
Spa Panels V1-T1-58
Riser Panel V1-T1-59
Type BR Renovation Loadcenter V1-T1-60
Type BR Retrofit Interior Kits V1-T1-73
BR Circuit Breakers V1-T1-76

1.3 Loadcenter Interiors/OEM Loadcenters

Product Description V1-T1-89
Standards and Certifications V1-T1-90
Product Selection V1-T1-90

1.4 Enclosed Breakers

Product Overview V1-T1-94
Product Description V1-T1-94
Standards and Certifications V1-T1-94
Product Selection V1-T1-95
Dimensions V1-T1-95

1.5 Classified Circuit Breakers

Product Description V1-T1-96
Product Selection V1-T1-97
Accessories V1-T1-99
Technical Data V1-T1-99
Wiring Diagrams V1-T1-100

Learn Online

Eaton Type CH Convertible Family

Contents

Description	*Page*
Overview	
Product Description	**V1-T1-3**
Features, Benefits and Functions	**V1-T1-3**
Standards and Certifications	**V1-T1-4**
Catalog Number Selection	**V1-T1-6**
Product Selection	**V1-T1-7**
Technical Data and Specifications	**V1-T1-29**
CH Specialty Products	**V1-T1-14**
CH Loadcenter Options and Accessories	**V1-T1-22**
CH Circuit Breakers	**V1-T1-31**

Overview

Product Selection Guide

CH Loadcenters

Description	
Service	
Single-phase, three-wire, 120/240 Vac	Three-phase, four-wire, 208Y/120 Vac
Three-phase, three-wire, 240 V corner grounded delta	Three-phase, three-wire, 240 Vac delta
Short-Circuit Current Rating	
10 kAIC: All single- and three-phase loadcenters 40–400 A, 2–42 circuits except when series ratings are applied	35 kAIC available on convertible units using CSH main breaker
25 kAIC: All factory-installed main breakers single-phase loadcenters rated 150–225 A using Type CSR main breakers	42 and 100 kAIC are available on some styles: single-phase and three-phase
Main Breaker/Main Lug Loadcenters	
Single-phase	Three-phase
Main breaker: 100, 125, 150, 200, 225, 400 A	Main breaker: 150, 200, 225, 300, 400 A
Main lugs: 40, 70, 125, 150, 200, 225, 400 A	Main lugs: 125, 150, 200, 225, 400 A
Convertible Loadcenters	
Main breaker or main lugs: single-phase up to 225 A	
Branch Breakers	
Type CH: 10–150 A. Single-, two- and three-pole. Selected amperages available in shunt trip, HACR and switching duty	Type CH-AFCI arc fault circuit interrupter
Ground fault circuit interruptors: 15–60 A	Type CHP: 10–125 A. Single-, two- and three-pole. three-position commercial trip
Type CH-HID: 15–30 A. Single-, two- and three-pole	Selected amperages available in HACR switching duty
CH-HM high magnetic	Type CHP-HID: 15–30 A. Single-, two- and three-pole
CH-M50 high ambient	Type CHP-GFCI: 15–30 A. Single-pole ground fault breakers
Enclosures	
NEMA® Type 1 indoor	NEMA Type 3R outdoor
Loadcenter and Breaker Accessories	
Branch circuit breaker:	Complete line of ground bar kits 5, 10, 14 and 21 circuits, some with additional #2/0 lugs
Auxiliary components	Each terminal will accommodate: (3) #14–#10 Cu/Al or (1) #14–#4 Cu/Al
Hold-down kits	Sub-feed lugs 125, 150 A—two- and three-pole
Handle ties	Shunt trips
Lockoffs	Universal rainproof conduit hubs Group One: 3/4, 1, 1-1/4, 1-1/2, 2 inches (19.1, 25.4, 31.8, 38.1, 50.8 mm) Group Two: 2, 2-1/2, 3 inches (50.8, 63.5, 76.2 mm)
Lockdogs	Adapter plate
Bussing	
Silver flash plated copper bus is a standard feature	

Product Description

Loadcenters are enclosures specifically designed to house the branch circuit breakers and wiring required to distribute power to individual circuits. They contain either a main breaker when used at the service entrance point or a main lug when used as a sub-panel to add circuits to existing service. The main breaker protects the main entire panel and can be used as a service disconnect. The branch breakers protect the wires leading to individual electrical loads such as fixtures and outlets.

Features, Benefits and Functions

Loadcenter Construction

Eaton's Type CH loadcenters feature silver flash plated copper bus in all interiors. Stabs are rated 200 A throughout the CH line. Therefore, the sum of the handle ratings connected to any one stab is limited to 200 A maximum. NEMA 1 boxes are manufactured from cold rolled 16 gauge sheet steel. Raintight boxes are manufactured from galvanized steel. All boxes and trims are finished using an electrostatic powder coat, baked urethane paint process.

Neutrals

Eaton Type CH loadcenters feature two types of neutrals:

Insulated/Bondable Split Neutral

Panels are supplied with split insulated neutrals with an insulated cross strap. For service entrance applications, the neutral must be bonded by using the bonding strap supplied with the panel. For non-service entrance (sub-panel) applications, the panel may be installed with the bonding strap not connected to the neutral. Separate ground bars must be used on non-service entrance panels.

Insulated/Bondable Single Neutral

Panels are supplied with a single insulated neutral. For service entrance applications, all that is required to bond the neutral is to loosen the bonding screw and the neutral screw directly beside it, insert the bonding strap into the neutral bar, and re-tighten both connections. The single neutral can be moved by the contractor to the other side of the panel, if desired. When used as a service entrance panel, unused neutral connections may be used for the termination of equipment grounds. For non-service entrance (sub-panel) applications, the panel may be installed with the bonding strap not connected to the neutral. Separate ground bars must be used on non-service entrance panels.

Inboard Plug-On Neutral

Code changes and higher safety standards are leading to more arc fault circuit interrupter (AFCI) installations. With the electrical contractor in mind, Eaton has revolutionized the way Combination AFCIs are installed with the Plug-on Neutral line of loadcenters and breakers. This unique product solution enables the contractor to connect the breaker directly to the neutral bar, eliminating the need for wiring a pigtail.

Grounds

In service entrance applications where the neutral is bonded, unused neutral holes may be used for terminating ground conductors. In sub-feed panels, the neutral must be isolated (non-bonded), and ground wires must be terminated on a separate ground bar.

The insulated/bondable single/split neutral panels have sufficient terminations for both ground and neutral conductors. The insulated/bondable single split neutral panels are supplied with a separate factory-installed ground bar if the catalog number contains a "G." If not, a separate ground bar should be installed. Insulated/Bondable Single Neutral panels are supplied without a ground bar (unless otherwise noted), and ground bar kits, if needed, must be purchased separately.

1

Standards and Certifications

UL® Listings

All Eaton Type CH loadcenters are listed under UL File E8741.

Neutral and Ground Terminals

The standard terminals on grounds and neutrals are rated to accept (3)—#14–#10 Cu/Al or (1)—#14–4 wires. For larger cables, add-on neutral lugs may be ordered from the Accessories.

Note: NEC® allows only one current carrying conductor per hole on neutrals unless otherwise noted.

Bottom-Fed Loadcenters

When the power cable is brought into the loadcenter from below the panel; then the main lug panels, and single-phase, 225 A and below, loadcenters can be rotated 180 degrees to allow straight-in wiring of power cables to the main terminals. Because the CSR main circuit breaker handle operates horizontally, the orientation of the main circuit breaker handle is consistent with the requirements of NEC Article 240.81.

Gutter Splicing

Loadcenters are not UL listed as wiring troughs. Therefore, gutter splicing of riser cables to tap off to the main device is not permitted. Refer to NEC Article 373.8.

Fire Rating

Due to the numerous openings in both loadcenter boxes and trims, they should not be mounted in firewalls. There is no approval method for sealing the enclosures for this application.

Date Code

The date of manufacture of each loadcenter is printed on the outside of the carton as well as inside the loadcenter. On the carton, the date code is printed on the end carton label. In the loadcenter, the date code is located on the small white label located on the right side wall (with the main device on top).

The date code is in the following format: F # # # &. The "F" is the numeric code for the Lincoln, IL plant, and the three numbers are the year and week of manufacture, e.g., 023. The "&" sign at the end signifies the decade of the 2000s. The "!" at the end signifies the decade of the 2010s. Therefore, the date code F023& would indicate that the product was manufactured in the 23rd week of 2000. The 1980s are represented by a "+" sign and the 1990s are represented by a "=" at the end of the code.

Plug-On Type CH Breakers

Quick-make, quick-break switch mechanism combined with inverse time element tripping operation and trip-free handle design. Type CH circuit breakers trip to the OFF position eliminating nuisance callbacks. The thermal-magnetic trip curve avoids nuisance tripping on mild overloads while reacting almost instantaneously to severe short-circuit conditions. CHF breakers include a 'trip flag' to differentiate between a tripped breaker and one that has been turned off. Multipole breakers have internal common trip connection to operate all poles simultaneously. Handles are marked with ON-OFF indication and ampere rating of the breaker. Type CH breakers meet UL Standard 489, NEMA standards, and Federal Spec Classification W-C 375 b/Gen. They are UL listed under File Number E11713, E8741, E3624 and E51287: and CSA® certified file number LR87196, except Type CHT breakers.

Type CH Circuit Breaker Ratings

Single- and double-pole CH breakers rated 15 and 20 A have low instantaneous magnetic trip levels. The 15 and 20 A breakers with "HM" suffix have high magnetic trip settings recommended for circuits with inherently high inrush currents. All Type CH breakers are marked for heating, air conditioning and refrigeration (HACR) equipment application. Single-pole 15–20 A breakers are also suitable for switching duty (SWD). Shunt trip coils operate on 120 Vac and require one additional pole space per breaker.

Listed

Type CH Loadcenter

Extra 1.5 inch Knockout (38.1 mm)
- Larger knockout provides easier installation and time savings for renovation installations

Top or Bottom Feed
- Straight-in wiring saves labor and material
- One panel for either top or bottom applications

2/0 Lug
- Easily removable and can be installed in any location on the neutral bar

Commercial Grade Main Breaker
- 25 kAIC series rated main breaker in 150 A–225 A load-centers. 35, 42 and 100 kAIC series ratings are available
- Optional convertible design—reduces inventory requirements

One Piece Silver-Flashed Copper Bus
- Provides superior conductivity, corrosion resistance and durability

Drywall Marking on Enclosure
- Indicates proper mounting depth for flush applications

Steel Backpan
- Provides solid and reliable breaker mounting—single piece design for stability and durability

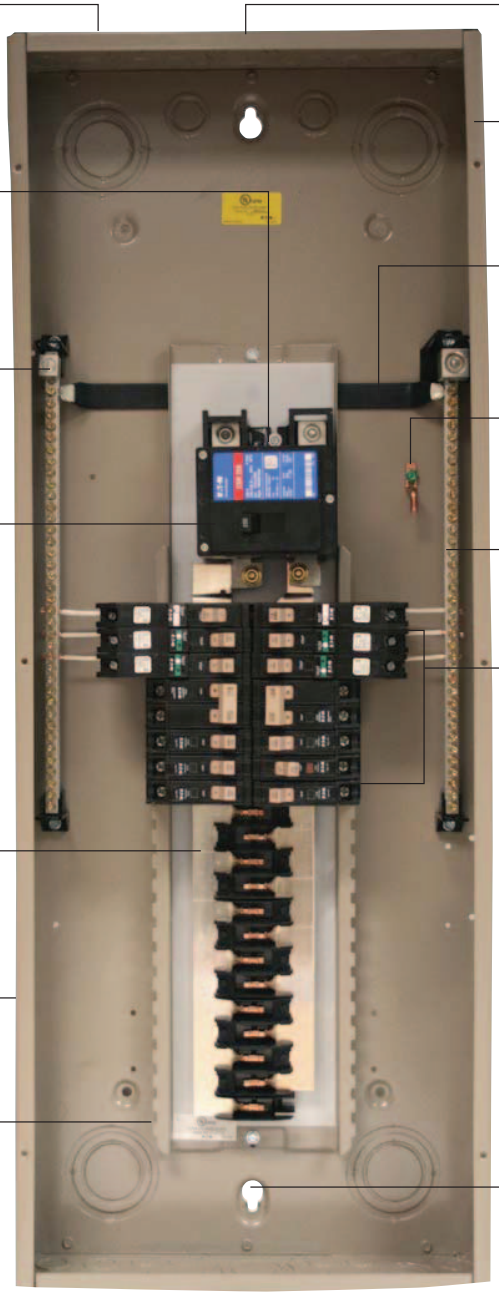

"Tangential" Center Knockout
- Easier installation for conduit applications

Unique Sandalwood Finish
- Aesthetically appealing, scratch-resistant powder coating

Neutral Bus (Strap)
- Easily removable for sub-panel applications

Bonding Z-Strap
- Provides easy field conversion for service entrance applications

Twin Neutral Bars
- Minimum 150% neutral capacity

Type CHF AFCI/GFCI/Thermal-Magnetic Breakers
- Advanced electronics effectively reduce nuisance tripping
- CHF AFCI breakers have a standard diagnostic LED indicating 1 of 7 trip codes
- Mechanical flag for trip indication (on thermal-magnetic AFCI and GFCI)
- All CH breakers provide industry exclusive 2-position handle with simple 1 step reset

Single Keyhole Mounting
- One keyhole at the top and bottom provides easier mounting and leveling

Warranty

The minimum warranty for residential loadcenters, breakers and surge protection devices shall be as follows:

- Lifetime loadcenter warranty
- Lifetime warranty on CH circuit breakers
- Lifetime warranty on CHSPT2ULTRA including $75,000 connected equipment warranty
- 1-year warranty on plug-in surge protective device (CHSA)

1

Catalog Number Selection

Loadcenters 100–225 A and 12–42 Circuits

CH 42 B _ _ 200 _ K

LC Type
Type CH 3/4-inch (19.1 mm) branch circuit breakers

Number of Circuits
Selection circuits

2	20
4	22
8	24
12	28
14	30
16	32
18	42

Main Device
- **L** = Main lug only
- **B** = Main breaker
- **N** = Convertible
- **H** = High AIC main breaker

Construction
- **Blank** = Standard
- **PN** = Plug-on neutral

Phases
- **Blank** = Single-phase
- **3** = Three-phase

Bus Amperes

40	150
70	200
100	225
125	

Box Sizes
- **B**
- **C**
- **D**
- **E**
- **G**
- **J**
- **K**
- **L**
- **R** = Outdoor (no cover)

Accessories
- **Blank** = Standard
- **EC** = Surge ready
- **SUR** = Surge factory installed

Indoor Covers Ordered Separately

CH _ 8 K F _

Type CH

Factory Options
- **Blank** = Standard
- **SUR** = Surge/surge ready

Loadcenter Cover Series

Box Size
Indicated in loadcenter catalog number

Mounting
- **F** = Combination flush/surface
- **S** = Surface

Accessories
- **Blank** = Standard
- **M** = Mechanical interlock

Note: All combinations are not valid, refer to the catalog section.

Product Selection

Single-Phase—Main Circuit Breaker Loadcenters—10/25 kAIC

CH42B200K

Single-Phase Three-Wire—120/240 Vac—Insulated/Bondable Split Neutral (Unless Otherwise Noted)

Main Breaker Type	Main Ampere Rating	Maximum Number 3/4-Inch (19.1 mm) of Poles	Enclosure Type	Box Size	Wire Size Range Cu/Al 60 °C or 75 °C for Main Breaker	Loadcenter ①② Catalog Number	Loadcenter Cover Catalog Number Combination ③	Surface
CH 10 kAIC	100	14	Indoor	B	#6–1/0	**CH14B100B** ④	**CH8BF**	**CH8BS**
		14	Outdoor	B	#6–1/0	**CH14B100R** ⑤	—	—
		18	Indoor	C	#6–1/0	**CH18B100C** ④	**CH8CF**	**CH8CS**
		18	Outdoor	C	#6–1/0	**CH18B100R** ⑤	—	—
		22	Indoor	C	#6–1/0	**CH22B100C** ④	**CH8CF**	**CH8CS**
		22	Outdoor	C	#6–1/0	**CH22B100R** ⑤	—	—
		30	Indoor	D	#6–1/0	**CH30B100D** ④	**CH8DF**	**CH8DS**
		30	Outdoor	D	#6–1/0	**CH30B100R** ⑤	—	—
	125	22	Indoor	C	#6–1/0	**CH22B125C** ④	**CH8CF**	**CH8CS**
		22	Outdoor	C	#6–1/0	**CH22B125R** ⑤	—	—
		30	Indoor	D	#6–1/0	**CH30B125D** ④	**CH8DF**	**CH8DS**
		30	Outdoor	D	#6–1/0	**CH30B125R** ⑤	—	—
CSR 25 kAIC	150	8	Outdoor	E	#2–300 kcmil	**CH8B150RF** ⑥	—	—
		24	Indoor	E	#2–300 kcmil	**CH24B150E** ④	**CH8EF**	**CH8ES**
		24	Outdoor	E	#2–300 kcmil	**CH24B150R** ⑤	—	—
		32	Indoor	J	#2–300 kcmil	**CH32B150J** ④	**CH8JF**	**CH8JS**
		32	Outdoor	J	#2–300 kcmil	**CH32B150R** ⑤	—	—
	200	8	Outdoor	E	#2–300 kcmil	**CH8B200RF** ⑥	—	—
		24	Indoor	E	#2–300 kcmil	**CH24B200E** ④	**CH8EF**	**CH8ES**
		24	Outdoor	E	#2–300 kcmil	**CH24B200R** ⑤	—	—
		32	Indoor	J	#2–300 kcmil	**CH32B200J** ④	**CH8JF**	**CH8JS**
		32	Outdoor	J	#2–300 kcmil	**CH32B200R** ⑤	—	—
		42	Indoor	K	#2–300 kcmil	**CH42B200K** ④	**CH8KF**	**CH8KS**
		42	Outdoor	K	#2–300 kcmil	**CH42B200R** ⑤	—	—
	225	32	Indoor	J	#2–300 kcmil	**CH32B225J** ④	**CH8JF**	**CH8JS**
		32	Outdoor	J	#2–300 kcmil	**CH32B225R** ⑤	—	—
		42	Indoor	K	#2–300 kcmil	**CH42B225K** ④	**CH8KF**	**CH8KS**
		42	Outdoor	K	#2–300 kcmil	**CH42B225R** ⑤	—	—
DK 10 kAIC	300	42	Indoor	PM	(2) 3/0–250 kcmil	**CH42PM300**	**CH7PMF** ⑦	**CH7PMS**
	400	42	Indoor	PM	(2) 3/0–250 kcmil	**CH42PM400**	**CH7PMF** ⑦	**CH7PMS**

Notes

① All main circuit breaker loadcenters are listed for use as service entrance equipment.
② Ground bar kits priced separately. See **Page V1-T1-25**.
③ Combination style covers may be used in surface or flush applications.
④ Can be top or bottom fed by rotating the enclosure and trim 180 degrees.
⑤ Rainproof panels are furnished with hub closure plates. For rainproof hubs, refer to **Page V1-T1-25**.
⑥ Panel includes #4–300 kcmil feed-through lugs.
⑦ This cover is for flush applications only (not combination).

Box sizes **Pages V1-T1-27** and **V1-T1-28**.

Single-Phase—High Interrupting Rated Main Circuit Breaker Loadcenters—100 kAIC

Single-Phase Three-Wire—120/240 Vac—Insulated/Bondable Split Neutral

Main Breaker Type	Main Ampere Rating	Maximum Number 3/4-Inch (19.1 mm) Poles	Enclosure Type	Box Size	Wire Size Range Cu/Al 60 °C or 75 °C for Main Breaker	Loadcenter ① Catalog Number	Loadcenter Cover Catalog Number Combination ②	Surface
CHB4 100 kAIC ⑤	100	32	Indoor	L	#6–1/0	**CH32H100L** ③	**CH8LF**	**CH8LS**
		32	Outdoor	L	#6–1/0	**CH32H100R** ④	—	—
CHH 100 kAIC ⑤	150	32	Indoor	L	#2/0–300 kcmil	**CH32H150L**	**CH8LF**	**CH8LS**
		32	Outdoor	L	#2/0–300 kcmil	**CH32H150R** ④	—	—
	200	32	Indoor	L	#2/0–300 kcmil	**CH32H200L**	**CH8LF**	**CH8LS**
		32	Outdoor	L	#2/0–300 kcmil	**CH32H200R** ④	—	—
		42	Indoor	L	#2/0–300 kcmil	**CH42H200L**	**CH8LF**	**CH8LS**
		42	Outdoor	L	#2/0–300 kcmil	**CH42H200R** ④	—	—
	225	42	Indoor	L	#2/0–300 kcmil	**CH42H225L**	**CH8LF**	**CH8LS**
		42	Outdoor	L	#2/0–300 kcmil	**CH42H225R** ④	—	—

Notes

① All main circuit breaker loadcenters are listed for use as service entrance equipment.
② Combination style covers may be used in surface or flush applications.
③ Loadcenter can be top or bottom fed by rotating the enclosure and trim 180 degrees.
④ Rainproof panels are furnished with hub closure plates. For rainproof hubs, refer to **Page V1-T1-25**.
⑤ Series rated for 100 kAIC with all Types CH, CHT and CHP breakers.

Single-Phase—Main Lug Loadcenters

Single-Phase Three-Wire—120/240 Vac—Insulated/Bondable Single Neutral

	Main Ampere Rating	Maximum Number 3/4-Inch (19.1 mm) Space	Poles	Enclosure Type	Type of Trim (Included)	Box Size	Wire Size Range Cu/Al 60 °C or 75 °C for Main Lugs	Loadcenter Catalog Number
Surface Outdoor	40	2	4 ①	Indoor	Surface (no door)	5	#14–6	**CH2L40SP** ②③
		2	4 ①	Outdoor	—	5R	#14–6	**CH2L40RP** ②③④
		2	4 ①	Indoor	Flush (no door)	5	#14–6	**CH2L40FP** ②③
Flush Outdoor	70	2	4 ①	Indoor	Surface (no door)	5	#14–2	**CH2L70SP** ②③
		2	4 ①	Outdoor	—	5R	#14–2	**CH2L70RP** ②③④
		2	4 ①	Indoor	Flush (no door)	5	#14–2	**CH2L70FP** ②③
Surface (No Door)	125	2	4 ①	Indoor	Surface (no door)	6	#14–1/0	**CH2L125SP** ②③
		2	4 ①	Outdoor	—	6R	#14–1/0	**CH2L125RP** ②③④
		2	2	Outdoor	—	—	#14–1/0	**CH2L125RSE2P** ④⑤⑥
		2	4 ①	Indoor	Flush (no door)	6	#14–1/0	**CH2L125FP** ②③
		4	8 ①	Indoor	Surface (no door)	7	#14–1/0	**CH4L125SP** ②⑦
		4	8 ①	Outdoor	—	7R	#14–1/0	**CH4L125RP** ②④⑦
Flush (No Door)		4	8 ①	Indoor	Flush (no door)	7	#14–1/0	**CH4L125FP** ②⑦
		6	12 ①	Outdoor	—	6R	#14–1/0	**CH6L125R** ②⑥⑦
		8	16 ①	Indoor	Surface (no door)	7	#6–1/0	**CH8L125SP** ②⑧
		8	16 ①	Outdoor	—	7R	#6–1/0	**CH8L125RP** ②⑥⑦
		8	16 ①	Indoor	Flush (no door)	7	#6–1/0	**CH8L125FP** ②⑧
Outdoor								

Notes

① Requires the use of Type CHT breakers.

② Ground bar kits priced separately, see **Page V1-T1-25**.
– For 2/4 and 6/12 circuit loadcenters, use Type GBK5 or GBK520 ground bar
– For 4/8 and 8/16 circuit loadcenters, use Type GBK10 ground bar
– Ground bars mount to the left side wall of the enclosure for the 4/8, 6/12 and 8/16 circuit loadcenters

③ Suitable for use as service equipment when not more than two service disconnecting mains are provided or when not used as a lighting and appliance panelboard (see Article 408.34 of the NEC).

④ Rainproof panels are furnished with hub closure plates. For rainproof hubs, refer to **Page V1-T1-25**.

⑤ For use as service entrance applications only.

⑥ Neutral/ground holes (6) #14–6 and (3) #14–2/0 AWG Cu/Al.

⑦ Suitable for use as service equipment when not more than two service disconnecting mains are provided or when not more than six service disconnecting mains are provided and when not used as a lighting and appliance panelboard (see Article 408.34 of the NEC).

⑧ Suitable for use as service equipment when a main breaker is used or when not more than six service disconnecting mains are provided and when not used as a lighting and appliance panelboard (see Article 408.34 of the NEC).

Box sizes **Pages V1-T1-27** and **V1-T1-28**.

CH42L225G

Single-Phase Three-Wire—120/240 Vac—Insulated/Bondable Split Neutral—Factory-Installed Ground Bar

Main Ampere Rating	Maximum Number 3/4-Inch (19.1 mm) Poles	Enclosure Type	Box Size	Wire Size Range Cu/Al 60 °C or 75 °C for Main Lugs	Loadcenter Catalog Number	Loadcenter Cover Catalog Number Combination	Loadcenter Cover Catalog Number Surface
125	12	Indoor	B	#6–2/0	**CH12L125B** ①	**CH8BF**	**CH8BS**
	12	Outdoor	B	#6–2/0	**CH12L125R** ①②	—	—
	16	Indoor	B	#6–2/0	**CH16L125B** ①	**CH8BF**	**CH8BS**
	16	Outdoor	B	#6–2/0	**CH16L125R** ①②	—	—
	20	Indoor	C	#6–2/0	**CH20L125C** ①	**CH8CF**	**CH8CS**
	20	Outdoor	C	#6–2/0	**CH20L125R** ①②	—	—
	24	Indoor	C	#6–2/0	**CH24L125C** ①	**CH8CF**	**CH8CS**
	24	Outdoor	C	#6–2/0	**CH24L125R** ①②	—	—
150	24	Indoor	D	#4–300 kcmil	**CH24L150D** ①	**CH8DF**	**CH8DS**
	24	Outdoor	D	#4–300 kcmil	**CH24L150R** ②③	—	—
	32	Indoor	D	#4–300 kcmil	**CH32L150D** ①	**CH8DF**	**CH8DS**
	32	Outdoor	D	#4–300 kcmil	**CH32L150R** ②③	—	—
200	12	Indoor	D	#4–300 kcmil	**CH12L200D** ①	**CH8DF**	**CH8DS**
	12	Outdoor	D	#4–300 kcmil	**CH12L200R** ②③	—	—
	16	Indoor	D	#4–300 kcmil	**CH16L200D** ①	**CH8DF**	**CH8DS**
	16	Outdoor	D	#4–300 kcmil	**CH16L200R** ②③	—	—
225	24	Indoor	D	#4–300 kcmil	**CH24L225D** ①	**CH8DF**	**CH8DS**
	24	Outdoor	D	#4–300 kcmil	**CH24L225R** ②③	—	—
	32	Indoor	D	#4–300 kcmil	**CH32L225D** ①	**CH8DF**	**CH8DS**
	32	Outdoor	D	#4–300 kcmil	**CH32L225R** ②③	—	—
	42	Indoor	G	#4–300 kcmil	**CH42L225G** ③	**CH8GF**	**CH8GS**
	42	Outdoor	G	#4–300 kcmil	**CH42L225R** ②③	—	—
400	42	Indoor	P	(2) 1/0–300 kcmil (1) 750 kcmil	**CH42PL400** ④	**CH7PF** ⑤	**CH7PS**

Notes

① Suitable for use as service equipment when not more than six disconnecting means are provided and when not used as a lighting and appliance panelboard (see Article 408.34 of the NEC).

② Rainproof panels are furnished with hub closure plates. For rainproof hubs, refer to **Page V1-T1-25**.

③ Suitable for use as service equipment when a circuit breaker is used as a main breaker. The main breaker is backfed and requires hold-down bracket kit catalog number **CH125RB**.

④ Suitable for use as service equipment when a circuit breaker is used as a main breaker. The main breaker is backfed and must be a Type CHB. **The breaker cannot be a Type CH**.

⑤ This cover is for flush application only (not combination).

Box sizes **Pages V1-T1-27** and **V1-T1-28**.

Convertible Loadcenters MCB or MLO—Base Units and Main Devices—10/25/35 kAIC

Complete assembly consists of: loadcenter, cover, and either main breaker kit or main lug kit.

Indoor—Single-Phase—Three-Wire—120/240 V—Insulated/Bondable Split Neutral—Top or Bottom Feed

Maximum Main Ampere Rating	Maximum Number of Single Poles	Box Size	Loadcenter Box and Panel Catalog Number ①	Loadcenter Cover Catalog Number		Main Lug Kit		Main Breaker Kit			
				Combination	Surface	Wire Size	Catalog Number	kAIC Rating	Wire Size	Catalog Number	
125	22	C	**CH22N125C**	**CH8CF**	**CH8CS**	#10–1/0	**CHL125N**	10	#10–1/0	**CH2100N** ③	—
										CH2125N ③	—
200	32	J	**CH32N200J**	**CH8JF**	**CH8JS**	#4–300 kcmil	**CHL225N**	25/35 ②	#2–300 kcmil	**CSR2125N**	**CSH2125N** ④
										CSR2150N	**CSH2150N** ④
										CSR2175N	**CSH2175N** ④
										CSR2200N	**CSH2200N** ④
225	42	K	**CH42N225K**	**CH8KF**	**CH8KS**	#4–300 kcmil	**CHL225N**	25/35 ②	#2–300 kcmil	**CSR2125N**	**CSH2125N** ④
										CSR2150N	**CSH2150N** ④
										CSR2175N	**CSH2175N** ④
										CSR2200N	**CSH2200N** ④
										CSR2225N	**CSH2225N** ④

Outdoor—Single-Phase—Three-Wire—120/240 V—Insulated/Bondable Split Neutral (Unless Otherwise Noted)

Maximum Main Ampere Rating	Maximum Number of Single Poles	Box Size	Loadcenter Box and Panel Catalog Number ①	Main Lug Kit		Main Breaker Kit			
				Wire Size	Catalog Number	kAIC Rating	Wire Size	Catalog Number	
125	22	C	**CH22N125R** ⑤	#10–1/0	**CHL125N**	10	#10–1/0	**CH2100N** ③	—
								CH2125N ③	—
200	8	E	**CH8N200RF** ⑤⑥⑦	#4–300 kcmil	**CHL225N**	25/35 ②	#2–300 kcmil	**CSR2125N**	**CSH2125N**
								CSR2150N	**CSH2150N**
								CSR2175N	**CSH2175N**
								CSR2200N	**CSH2200N**
200	32	J	**CH32N200R** ⑤	#4–300 kcmil	**CHL225N**	25/35 ②	#2–300 kcmil	**CSR2125N**	**CSH2125N** ④
								CSR2150N	**CSH2150N** ④
								CSR2175N	**CSH2175N** ④
								CSR2200N	**CSH2200N** ④
225	42	K	**CH42N225R** ⑤	#4–300 kcmil	**CHL225N**	25/35 ②	#2–300 kcmil	**CSR2125N**	**CSH2125N** ④
								CSR2150N	**CSH2150N** ④
								CSR2175N	**CSH2175N** ④
								CSR2200N	**CSH2200N** ④
								CSR2225N	**CSH2225N** ④

Notes

① Panel does not include main. Order main breaker or main lug kit separately.
② If 35 kAIC is required, use CSH breaker.
③ Hold-down kit included.
④ 35 kAIC series combination rating is obtained when Types CH, CHT and CHP branch breakers are used with CSH main.
⑤ Rainproof panels are furnished with hub closure plates. For rainproof hubs, refer to **Page V1-T1-25**.
⑥ Includes feed-through lugs for both phase and neutral conductors.
⑦ Insulated/bondable single neutral.

Interrupting rating depends on main circuit breaker selected.

Three-Phase—Main Circuit Breaker Loadcenters—10 kAIC

CH42B3200L

Three-Phase Four-Wire—208Y/120 Vac or 240 Vac Insulated/Bondable Split Neutral

Main Breaker Type	Main Ampere Rating	Maximum Number 3/4-Inch (19.1 mm) Poles	Enclosure Type	Box Size	Wire Size Range Cu/Al 60 °C or 75 °C for Main Breaker	Loadcenter ①② Catalog Number	Loadcenter Cover Catalog Number Combination	Loadcenter Cover Catalog Number Surface
CC 10 kAIC	150	30	Indoor	L	#1–4/0	**CH30B3150L**	**CH8LF**	**CH8LS**
		30	Outdoor	L	#1–4/0	**CH30B3150R** ③	—	—
	200	30	Indoor	L	#2/0–300 kcmil	**CH30B3200L**	**CH8LF**	**CH8LS**
		30	Outdoor	L	#2/0–300 kcmil	**CH30B3200R** ③	—	—
		42	Indoor	L	#2/0–300 kcmil	**CH42B3200L**	**CH8LF**	**CH8LS**
		42	Outdoor	L	#2/0–300 kcmil	**CH42B3200R** ③	—	—
	225	30	Indoor	L	#2/0–300 kcmil	**CH30B3225L**	**CH8LF**	**CH8LS**
		30	Outdoor	L	#2/0–300 kcmil	**CH30B3225R** ③	—	—
		42	Indoor	L	#2/0–300 kcmil	**CH42B3225L**	**CH8LF**	**CH8LS**
		42	Outdoor	L	#2/0–300 kcmil	**CH42B3225R** ③	—	—
	400	42	Indoor	PM	(2) 3/0–350 kcmil	**CH424PM400**	**CH7PMF** ④	**CH7PMS**

Three-Phase—High Interrupting Rated Main Circuit Breaker Loadcenters—100 kAIC

Three-Phase Four-Wire—208Y/120 Vac or 240 Vac Insulated/Bondable Split Neutral

Main Breaker Type	Main Ampere Rating	Maximum Number 3/4-Inch (19.1 mm) of Poles	Enclosure Type	Box Size	Wire Size Range Cu/Al 60 °C or 75 °C for Main Breaker	Loadcenter Catalog Number ①②	Loadcenter Cover Catalog Number Combination	Loadcenter Cover Catalog Number Surface
CHH 100 kAIC ⑤	200	30	Indoor	L	#2/0–300 kcmil	**CH30H3200L**	**CH8LF**	**CH8LS**
		30	Outdoor	L	#2/0–300 kcmil	**CH30H3200R** ③	—	—
		42	Indoor	L	#2/0–300 kcmil	**CH42H3200L**	**CH8LF**	**CH8LS**
		42	Outdoor	L	#2/0–300 kcmil	**CH42H3200R** ③	—	—
	225	42	Indoor	L	#2/0–300 kcmil	**CH42H3225L**	**CH8LF**	**CH8LS**
		42	Outdoor	L	#2/0–300 kcmil	**CH42H3225R** ③	—	—

Notes

① All main circuit breaker loadcenters are listed for use as service entrance equipment.
② Ground bar kits priced separately. For ground bar kits, see **Page V1-T1-25**.
③ Rainproof loadcenters are furnished with hub closure plates. For rainproof hubs, refer to **Page V1-T1-25**.
④ This cover for flush application only (not combination).
⑤ 100 kAIC series combination rating is obtained when Types CH and CHP branch breakers are used with CHH main.

Three-Phase—Main Lug Loadcenters

Three-Phase Four-Wire—208Y/120 Vac or 240 Vac Insulated/Bondable Split Neutral (Unless Otherwise Noted)

Main Ampere Rating	Maximum Number 3/4-Inch (19.1 mm) Spaces	Poles	Enclosure Type	Type of Trim Included	Box Size	Wire Size Range Cu/Al 60 °C or 75 °C for Main Lugs	Loadcenter Catalog Number	Loadcenter Cover Catalog Number Combination	Single
125	6	12 ①	Indoor	Surface, no door	7	#14–1/0	**CH6L3125SP** ②③④	—	—
	6	12 ①	Outdoor	—	7R	#14–1/0	**CH6L3125RP** ②③④⑤	—	—
	6	12 ①	Indoor	Flush, no door	7	#14–1/0	**CH6L3125FP** ②③④	—	—
	12	12	Indoor	—	B	#6–2/0	**CH12L3125B** ⑥⑦	**CH8BF**	**CH8BS**
	12	12	Outdoor	—	B	#6–2/0	**CH12L3125R** ⑤⑥⑦	—	—
	18	18	Indoor	—	C	#6–2/0	**CH18L3125C** ⑥⑦	**CH8CF**	**CH8CS**
	18	18	Outdoor	—	C	#6–2/0	**CH18L3125R** ⑥⑦⑧	—	—
	24	24	Indoor	—	C	#6–2/0	**CH24L3125C** ⑥⑦	**CH8CF**	**CH8CS**
	24	24	Outdoor	—	C	#6–2/0	**CH24L3125R** ⑥⑦⑧	—	—
150	30	30	Indoor	—	D	#4–300 kcmil	**CH30L3150D** ⑥⑦	**CH8DF**	**CH8DS**
	30	30	Outdoor	—	D	#4–300 kcmil	**CH30L3150R** ⑤⑥⑨	—	—
225	24	24	Indoor	—	D	#4–300 kcmil	**CH24L3225D** ⑥⑦	**CH8DF**	**CH8DS**
	24	24	Outdoor	—	D	#4–300 kcmil	**CH24L3225R** ⑤⑥⑨	—	—
	30	30	Indoor	—	D	#4–300 kcmil	**CH30L3225D** ⑥⑦	**CH8DF**	**CH8DS**
	30	30	Outdoor	—	D	#4–300 kcmil	**CH30L3225R** ⑤⑥⑨	—	—
	42	42	Indoor	—	G	#4–300 kcmil	**CH42L3225G** ⑧⑨	**CH8GF**	**CH8GS**
	42	42	Outdoor	—	G	#4–300 kcmil	**CH42L3225R** ⑤⑧⑨	—	—
400	42	42	Indoor	—	P	(2) 1/0–300 kcmil (1) 750 kcmil	**CH424PL400** ⑩⑪	**CH7PF** ⑫	**CH7PS**

Notes

① Requires the use of Type CHT breakers.
② Suitable for use as service equipment when not more than two service disconnecting means are provided or when not more than six service disconnecting means are provided and when not used as a lighting and appliance panelboard (see Article 408.34 of the NEC).
③ Ground bar kits priced separately, see **Page V1-T1-25**.
– Use GBK10 ground bar
– Ground bars mount to the left side wall of the enclosure.
④ Insulated/bondable single neutral.
⑤ Rainproof loadcenters are furnished with hub closure plates. For rainproof hubs, refer to **Page V1-T1-25**.
⑥ Ground bar Type GBK14 is installed.
⑦ Suitable for use as service equipment when a circuit breaker is used as a main breaker. The main breaker is backfed and requires hold-down bracket kit catalog number Type **CH125RB**. Suitable for use as service equipment when not more than six service disconnecting means are provided and when not used as a lighting and appliance panelboard (see Article 408.34 of the NEC).
⑧ Ground bar Type GBK21 is installed.
⑨ Suitable for use as service equipment when a circuit breaker is used as a main breaker. The main breaker is backfed and requires hold-down kit catalog number Type **CH125RB**.
⑩ For ground bar kits, see **Page V1-T1-25**.
⑪ Suitable for use as service equipment when a circuit breaker is used as a main breaker. The main breaker is backfed and must be a Type CHB. **The breaker cannot be a Type CH**.
⑫ This cover for flush application only (not combination).

Box sizes **Pages V1-T1-27** and **V1-T1-28**.

Spa Panels

Contents—CH Specialty Products

Description	*Page*
Overview	V1-T1-2
CH Specialty Products	
Spa Panels	
Surge Panel	V1-T1-15
Plug-On Neutral Loadcenter	V1-T1-17
Type CH Renovation Loadcenter	V1-T1-18
Type CH Retrofit Interior Kits	V1-T1-19
CH Loadcenter Options and Accessories	V1-T1-22
CH Circuit Breakers	V1-T1-31

CH Specialty Products

Spa Panels

Product Description:

Eaton's CH Spa Panels are premium factory-assembled "combination" units that provide ground fault protection, as well as a convenient way to turn spa pumps on and off. The NEC requires that all pool and spa pumps be protected by a ground fault interrupter and a disconnect switch mounted within 10 feet of the tub or the spa.

Features

- Two extra circuits for additional loads
- Limited lifetime warranty
- UL Listed
- Tough powder-coated galvanized steel enclosure
- Factory-installed two-pole ground fault circuit interrupter (GFCI)

Quick-Pro℠

All you need to know to save time and make more money. Specified on certain Eaton products, the Quick-Pro symbol allows for immediate recognition of products that are designed for straightforward installation. When you see Quick-Pro, you know you can install quickly—sometimes up to 50% less than the usual installation time—and move on to your next job.

Product Selection

CH Spa Panel

Single-Phase Three-Wire—120/240 Vac Insulated/Bondable Neutral—Factory-Installed Ground Bar

Main Ampere Rating	Circuit Breaker Included	Enclosure Type	Type of Trim Included	Box Size	Wire Size Range Cu/Al 60 °C or 75 °C for Main Lugs	Catalog Number
30	CH230GF	Outdoor	—	5R	#14–1/0	**CH30SPA** ①
40	CH240GF	Outdoor	—	5R	#14–1/0	**CH40SPA** ②
50	CH250GF	Outdoor	—	5R	#14–1/0	**CH50SPA** ③
60	CH260GF	Outdoor	—	5R	#14–1/0	**CH60SPA** ④

Notes

① Includes a CH230GFI breaker, factory installed, and two extra circuits for convenience.
② Includes a CH240GFI breaker, factory installed, and two extra circuits for convenience.
③ Includes a CH250GFI breaker, factory installed, and two extra circuits for convenience.
④ Includes a CH260GFI breaker, factory installed, and two extra circuits for convenience.

Surge Panel

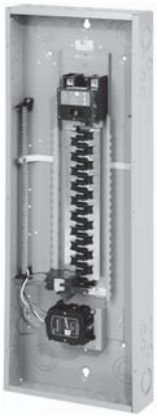

Contents—CH Specialty Products

Description	*Page*
Overview	V1-T1-2
CH Specialty Products	
Spa Panels	V1-T1-14
Surge Panel	
Plug-On Neutral Loadcenter	V1-T1-17
Type CH Renovation Loadcenter	V1-T1-18
Type CH Retrofit Interior Kits	V1-T1-19
CH Loadcenter Options and Accessories	V1-T1-22
CH Circuit Breakers	V1-T1-31

Surge Panel

Product Description

Eaton's Type CH Surge Loadcenter includes a factory-mounted and wired surge suppressor device. There is a knockout in the cover that allows the user to view the status indication lights on the surge suppressor. The CH Surge Loadcenter reduces the surge current, helping protect sensitive home electronic equipment.

Save labor by installing a factory-mounted surge protective device.

Factory-Installed Surge Protection

- Includes a CHSPT2ULTRA and a two-pole 50 A circuit breaker
- Increases the effectiveness of surge protection due to reduced lead length
- A modified deadfront allows for easy viewing of indicating lights

Surge Ready

- Provides a mounting provision for CHSPT2ULTRA
- A modified deadfront allows for easy viewing of indicating lights

Product Selection

Surge Installed Loadcenters

Ampere Rating	Type	Number of Circuits	Loadcenter Catalog Number	Loadcenter Cover Catalog Number Combination	Surface
225	Convertible	42	**CHSUR42N225L** ①	**CHSUR8LF**	**CHSUR8LS**
225	Convertible ②	42	**CHSUR42L225L2** ①	**CHSUR8LF**	**CHSUR8LS**
200	Main breaker	42	**CHSUR42B200L2** ①	**CHSUR8LF**	**CHSUR8LS**
225	Convertible	32	**CHSUR32N225K** ①	**CHSUR8KF**	**CHSUR8KS**
225	Convertible ②	32	**CHSUR32L225K** ①	**CHSUR8KF**	**CHSUR8KS**
200	Main breaker	32	**CHSUR32B200K** ①	**CHSUR8KF**	**CHSUR8KS**
150	Main breaker	32	**CHSUR32B150K** ①	**CHSUR8KF**	**CHSUR8KS**
100	Main breaker	32	**CHSUR32B100K** ①	**CHSUR8KF**	**CHSUR8KS**
125	Convertible ②	24	**CHSUR24L125E** ①	**CHSUR8EF**	**CHSUR8ES**
100	Main breaker	24	**CHSUR24B100E** ①	**CHSUR8EF**	**CHSUR8ES**
200	Convertible	40/40	**BRSUR4040N200**	Cover included	
200	Main lug	40/40	**BRSUR4040L200**	Cover included	
200	Main breaker	40/40	**BRSUR4040B200**	Cover included	
200	Convertible	30/40	**BRSUR3040N200**	Cover included	
200	Main lug	30/40	**BRSUR3040L200**	Cover included	
200	Main breaker	30/40	**BRSUR3040B200**	Cover included	

Notes

① Order cover separately.
② With main lugs installed.

Surge Ready Loadcenters (provision only, CHSPT2ULTRA and breaker not included)

Ampere Rating	Type	Number of Circuits	Loadcenter Catalog Number ①	Loadcenter Cover Catalog Number Combination	Surface
225	Convertible	42	**CHEC42N225L**	**CHSUR8LF**	**CHSUR8LS**
225	Convertible ②	42	**CHEC42L225L**	**CHSUR8LF**	**CHSUR8LS**
200	Main breaker	42	**CHEC42B200L**	**CHSUR8LF**	**CHSUR8LS**
225	Convertible ②	32	**CHEC32L225K**	**CHSUR8KF**	**CHSUR8KS**
225	Convertible	32	**CHEC32N225K**	**CHSUR8KF**	**CHSUR8KS**
225	Convertible	32	**CHEC32N225R** ③	—	—
200	Main breaker	32	**CHEC32B200K**	**CHSUR8KF**	**CHSUR8KS**
150	Main breaker	32	**CHEC32B150K**	**CHSUR8KF**	**CHSUR8KS**
100	Main breaker	32	**CHEC32B100K**	**CHSUR8KF**	**CHSUR8KS**
125	Convertible ②	24	**CHEC24L125E**	**CHSUR8EF**	**CHSUR8ES**
100	Main breaker	24	**CHEC24B100E**	**CHSUR8EF**	**CHSUR8ES**

Main Breaker Kits

Maximum Main Ampere Rating	Catalog Number 25 kAIC	35 kAIC
100	**CSR2100N**	**CSH2100N**
150	**CSR2150N**	**CSH2150N**
200	**CSR2200N**	**CSH2200N**
225	**CSR2225N**	**CSH2225N**

Main Lug Kits

Maximum Main Ampere Rating	Catalog Number
125	**CHL125N**
225	**CHL225N**

Technical Data and Specifications

Ratings

- Loadcenter
  - 25 kAIC main breaker, main lug only, and convertible main breaker/main lug
  - Factory installed or provision for field-installed surge suppressor
  - Top or bottom feed
- Surge protective device (CHSPT2ULTRA)
  - Nominal discharge current: 20 kA (I_n)
  - Surge current capacity per phase: 108 kA
  - Warranty: $75,000 connected equipment ④
  - For further product ratings, see Volume 1, Tab 2.1 Surge Protection

Notes

① Order cover separately.

② With main lugs installed.

③ Rainproof loadcenters are furnished with hub closure plates. For rainproof hubs, refer to **Page V1-T1-25**.

④ For warranty details, visit www.eaton.com/surgetrap.

60-Circuit Plug-On Neutral Loadcenter

Contents—CH Specialty Products

Description	*Page*
Overview	V1-T1-2
CH Specialty Products	
Spa Panels	V1-T1-14
Surge Panel	V1-T1-15
Plug-On Neutral Loadcenter	
Type CH Renovation Loadcenter	V1-T1-18
Type CH Retrofit Interior Kits	V1-T1-19
CH Loadcenter Options and Accessories	V1-T1-22
CH Circuit Breakers	V1-T1-31

Plug-On Neutral Loadcenter

Product Description

Code changes and higher safety standards are leading to more arc fault and ground fault circuit interrupter installations. Eaton offers a unique product solution that enables a direct connection of the breaker to the neutral bar, eliminating the need for wiring a pigtail.

Features and Benefits

- Time savings up to 25% per AFCI/GFCI installation
- Eliminates nuisance tripping due to loose pigtail connections
- Clean gutter space
- Easier troubleshooting due to less wiring
- Backed by a limited lifetime warranty

Product Selection

Main Breaker Plug-On Neutral Loadcenters

Main Breaker Type	Main Ampere Rating	Max. Number 3/4-Inch Poles	Enclosure Type	Wire Size Range for Main Breaker	Catalog Number	Cover Catalog Number Combination	Cover Catalog Number Surface
CSR 25 kAIC	100	24	Indoor	#2–300 kcmil	**CH24BPN100E**	**CH8EF**	**CH8ES**
	200	32	Indoor	#2–300 kcmil	**CH32BPN200J**	**CH8JF**	**CH8JS**
	200	42	Indoor	#2–300 kcmil	**CH42BPN200K**	**CH8KF**	**CH8KS**
	200	60	Indoor	#2–300 kcmil	**CH60BPN200N**	**CH8NF**	**CH8NS**

Main Lug Only/Convertible Plug-On Neutral Loadcenters—With Factory Installed Main Lugs

Max. Ampere Rating	Max. Number 3/4-Inch Poles	Enclosure Type	Catalog Number	Wire Size Range for Main Breaker	Cover Catalog Number Combination	Cover Catalog Number Surface
125	24	Indoor	**CH24NLPN125E** ①	#6–300 kcmil	**CH8NLEF**	**CH8NLES**
225	32	Indoor	**CH32NLPN225J**	#6–300 kcmil	**CH8NLJF**	**CH8NLJS**
225	42	Indoor	**CH42NLPN225K**	#6–300 kcmil	**CH8NLKF**	**CH8NLKS**
225	60	Indoor	**CH60NLPN225N**	#6–300 kcmil	**CH8NLNF**	—

Main Breaker Kits

Breaker Ampere Rating	Lug Size	Catalog Number
100	#2–300 kcmil	**CSR2100**
150	#2–300 kcmil	**CSR2150N**
200	#2–300 kcmil	**CSR2200N**
225	#2–300 kcmil	**CSR2225N**

Note

① Maximum 125 A main device.

Renovation Panel

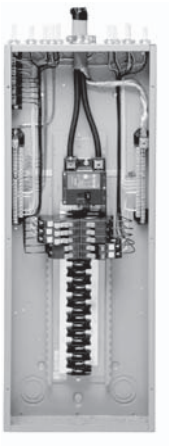

Contents—CH Specialty Products

Description	*Page*
Overview	V1-T1-2
CH Specialty Products	
Spa Panels	V1-T1-14
Surge Panel	V1-T1-15
Plug-On Neutral Loadcenter	V1-T1-17
Type CH Renovation Loadcenter	
Type CH Retrofit Interior Kits	V1-T1-19
CH Loadcenter Options and Accessories	V1-T1-22
CH Circuit Breakers	V1-T1-31

Type CH Renovation Loadcenter

Product Description

Eaton's Renovation Loadcenter is designed for the service contractor. With the addition of a five-circuit terminal block factory mounted in the top left corner of the loadcenter, the service contractor can terminate short-circuit wires instead of having to use expensive wire nuts. Also, the Renovation Loadcenter incorporates a twin-stacked neutral design that places the neutral and ground terminations higher in the loadcenter. Both of these features were added without increasing any size from a standard loadcenter. These features will eliminate the need for wire nuts and make for a much neater installation. There is a provision to field mount a second five-circuit terminal block (RN5TB) in the top right corner of the loadcenter. Choose amongst Eaton's Type CH breaker family for use in the Renovation Panel.

Product Selection

Single-Phase—Main Circuit Breaker Loadcenters 25 kAIC ①

Single-Phase, Three-Wire—120/240 Vac—Stacked Split Neutral

Main Breaker Type	Main Ampere Rating	Max. Number 3/4-Inch (19.1 mm) of Poles	Enclosure Type	Box Size	Wire Size Range Cu/Al 60 °C or 70 °C for Main Breakers	Loadcenter Catalog Number	Cover Catalog Number ② Combination	Cover Catalog Number ② Surface
CH	100	20	Indoor	C	#6–1/0	**CH22B100CRN**	**CH8CFF**	**CH8CS**
CSR	150	32	Indoor	J	#2–300 kcmil	**CH32B150JRN**	**CH8JF**	**CH8JS**
CSR	200	32	Indoor	J	#2–300 kcmil	**CH32B200JRN**	**CH8J**	**CH8JS**
CSR	200	42	Indoor	K	#2–300 kcmil	**CH42B200KRN**	**CH8KF**	**CH8KS**

Branch Circuit Breakers (CH)

See **Pages V1-T1-2–V1-T1-13**.

Renovation Loadcenter

Description	Catalog Number
Five-circuit terminal block kit	**RN5TB**
Ground bar kits (two maximum per panel)	(See **Page V1-T1-25**)

Notes

① 100 A main breaker is rated 10 kAIC.

② Combination style covers may be used in surface or flush applications.

All main circuit breaker loadcenters are listed for use as service entrance equipment. Loadcenters are factory-bonded for service entrance applications. Remove bonding strap for separate neutral and ground bars for sub-feed applications.

Type CH Retrofit Interior

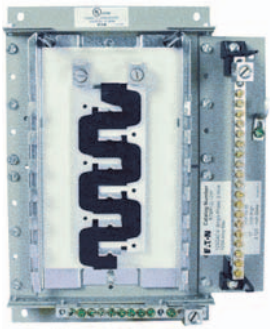

Type CH Retrofit Adjustable Interior

Type CH Retrofit Interior Collar and Assembly with Trim

Contents—CH Specialty Products

Description	*Page*
Overview	**V1-T1-2**
CH Specialty Products	
Spa Panels	**V1-T1-14**
Surge Panel	**V1-T1-15**
Plug-On Neutral Loadcenter	**V1-T1-17**
Type CH Renovation Loadcenter	**V1-T1-18**
Type CH Retrofit Interior Kits	
CH Loadcenter Options and Accessories	**V1-T1-22**
CH Circuit Breakers	**V1-T1-31**

Type CH Retrofit Interior Kits

Product Description

Eaton's unique Retrofit Interior allows the customer to cost-effectively and safely upgrade an electrical service without removing the existing enclosure from the wall.

Application Description

The Retrofit Interior is designed and tested specifically for renovating an outdated electrical panel in an apartment, a condominium or a single family home. These outdated panels are being recognized by local inspectors and other authorities as a possible hazard.

Opportunities to Retrofit

- Single- or three-phase
- Main lug only or main breaker
- Up to 42 circuits
- Up to 225 A interiors, 400 A available upon request
- Available with CH breakers (3/4-inch) with copper bus or BR breakers (1-inch) with aluminum bus
- The minimum lifetime warranty for residential breakers shall be as follows:
  - Limited lifetime warranty on all CH branch breakers and loadcenters
  - Refer to Eaton for complete warranty details

Features and Benefits

Upgrading Existing Electrical Infrastructure Is Simple

- Replaces vintage brands that have hard to find, expensive replacement breakers
- Safely upgrade to arc fault and ground fault breakers to meet current electrical codes
- Maximizes number of circuits available with compact design
- Eco-friendly in asbestos-filled environments
- Exclusive design

Save Time and Money Throughout the Installation

- Uses existing panel box and wires
- Eliminates expensive and time-consuming drywall/paint repair
- Saves 2–3 hours of installation time compared to a complete panel changeout
- Eliminates precise measurements with field-adjustable kit

Detailed Product Guide

For questions about retrofit solutions, contact the Lincoln Flex Center at 800-330-6479 or flexcenterlincoln@eaton.com. Be sure to provide width, height and depth of panel.

Standards and Certifications

Meets 2008/2011/2014 NEC wire bending requirements.

1

CH Specialty Product Selection

To select the retrofit kit:

1. From the existing box size determine which retrofit groups are suitable (may be more than one).
2. Use type of interior, number of phases, and type of main to find the selection chart.
3. Select part number from chart (if main breaker, replace XXX with specific amp rating).
4. Note that the overlap of the existing wall is the retro cover size minus the existing box size. If specific measurements are needed, communicate that you need a custom trim size.
5. Contact the Lincoln Flex Center at 800-330-6479 for pricing, lead-times, and order entry instructions.

How to Order:

1. Measure the existing panel enclosure to determine appropriate kits for your project.
2. Match the existing dimensions with the table below to obtain the correct catalog number.
3. Order your retrofit kit from a local Eaton authorized distributor.

Need assistance or can't find retrofit to fit existing enclosure?

Email or call Eaton's Residential Flex Center at 1-800-330-6479 for all your retrofit needs. Go to www.eaton.com/eccn to locate an Eaton Certified Contractor.

Retrofit Interior Kit Specifications

Five recommended groups: existing box height determines retro group size. Approximate Dimensions in Inches (mm).

		Existing Enclosure Parameters—Inches (mm)									
Catalog Number ①	**Cover ②**	**Minimum Depth**	**Maximum Depth**	**Minimum Width**	**Minimum Height**	**Phase**	**Main**	**Bus**	**Amperes ③**	**Spaces / Circuits**	**UL 67 Listed**
CH Retrofit Interiors and Covers											
RWCH6L125N	**CRWCH6ML******	3.13 (79.5)	4.13 (104.9)	7.00 (177.8)	8.50 (215.9)	Single	MLO	CH	125	6	No
RSCH10B125N	**CRWCH12ML******	3.50 (88.9)	4.50 (114.3)	8.50 (215.9)	16.50 (419.1)	Single	MCB	CH	125	10	No
RSCH12L125N	**CRWCH12ML******	3.50 (88.9)	4.50 (114.3)	8.50 (215.9)	16.50 (419.1)	Single	MLO	CH	125	12	No
RACH22B125J	**CRACH24ML******	3.75 (95.3)	4.25 (108.0)	13.00 (330.2)	21.00 (533.4)	Single	MCB	CH	125	22	No
RACH24L125J	**CRACH24ML******	3.75 (95.3)	4.25 (108.0)	13.00 (330.2)	21.00 (533.4)	Single	MLO	CH	125	24	No
RBCH24B200_	**CRBCH24CS******	3.75 (95.3)	6.00 (152.4)	13.00 (330.2)	29.00 (736.6)	Single	MCB	CH	200	24	No
RBCH32L200_	**CRBCH32ML******	3.75 (95.3)	6.00 (152.4)	13.00 (330.2)	29.00 (736.6)	Single	MLO	CH	200	32	No
RCCH32B200_	**CRBCH32CS******	3.75 (95.3)	6.00 (152.4)	13.00 (330.2)	34.00 (863.6)	Single	MCB	CH	200	32	No

Notes

① Catalog numbers shown with "_" at the end need one of the following suffixes to denote depth:
J = 3.75–4.25
K = 4.25–5.00
L = 5.00–6.00
Example: RBCH24B200J would signify an interior set with a depth range of 3.75 to 4.25 inches.

② ****Denotes characters in the catalog number that relate to overall cover size.
Example: CRWCH6ML2620 would signify a cover 26.00 inches H x 20.00 inches W, or CRBCH24CS3324 would be 33.00 inches H x 24.00 inches W.

③ Amperes for MB panels is maximum; catalog number will reflect actual amperage of breaker included.

For UL applications, maximum cover sizes may apply.

Complete Assembly

Note: For complete assembly, interior and cover need to be ordered separately.

Adjustable Interior

- Factory installed ground and neutral bars positioned to accept existing wires
- Field adjustable depth matches existing panel box
- Adjustable height enables optional placement of the interior
- Field bondable for service entrance options

Adjustable Interior

Standard Trim and Collar

- Standard trim matches new interior
- New circuit directory for updated labeling
- Oversized collar eliminates expensive wall/paint repair

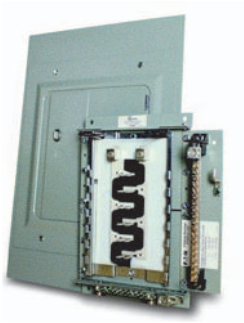

Collar and Assembly with Trim

Single-Phase—Main Lug Loadcenters, Non-Metallic

2460SNM

Single-Phase Three-Wire—120/240 Vac—Insulated/Bondable Neutral

Main Ampere Rating	Maximum Number 1-Inch (25.4 mm) Spaces	Circuits	Enclosure Type	Trim Type	Box Size	Wire Size Range Cu/Al 60 °C or 75 °C for Main Lugs	Loadcenter Catalog Number
40 ①	2	4	Indoor	Flush (no door)	2	②	**TT120FLGNM** ②③
	2	4	Indoor	Surface (no door)	2		**TT120SLGNM** ②③
60	2	4	Indoor	Flush (no door)	2	#14–2	**2460FNM**
	2	4	Indoor	Surface (no door)	2		**2460SNM**
	2	4	Indoor	Flush (no door)	2		**2460FGNM** ③
	2	4	Indoor	Surface (no door)	2		**2460SGNM** ③
	2	4	Outdoor	—	—		**2460RNM-A2**

Notes

① Suitable for use as service equipment when not more than six main disconnecting means are provided and when not used as a lighting and appliance panelboard (see Article 408.34 of the NEC).

② This device has no main lugs. A Type BR or BD breaker is required to be backfed to supply power to branch breakers. This device is single-phase 120 Vac only. With the use of three Type BR breakers, there are two branch circuits available. With the use of three Type BD breakers, there are five branch circuits available.

③ Includes GB4NM ground bar.

1

CH Loadcenter Options and Accessories

CHSF2125

CHSF3125

CHFP

TDL

BINA

Field Installation and Parts

Description	Ordering Quantity ①	Catalog Number
Sub-feed lug blocks—two-pole, 125 A, 3/4-inch (19.1 mm) spaces needed	1	**CHSF2125**
Sub-feed lug blocks—three-pole, 125 A, 3/4-inch (19.1 mm) spaces needed	1	**CHSF3125**
Neutral/ground lug—add-on neutral or ground lug	1	**NL20**
	1	**NL30**
	1	**NL300**
Filler plates—3/4-inch (19.1 mm) space circuit breaker space	25	**CHFP**
CSR main circuit breaker filler plate (with hardware)	1	**CSRFP**
Door lock—12–42 circuits, and 100–225 A	1	**TDL**
Sandlewood spray paint	1	**SPCSW**
ANSI-61 light gray touchup paint for outdoor loadcenters	1	**SPC61**
Isolated neutral assembly (computer circuits)	1	**BINA**
Circuit directory—adhesive backed	10	**TCD**
Cover screws	25	**LCCS**
Cover replacement latch 14-5/16 inch (363.55 mm) wide loadcenters only	1	**CHRLS**
Circuit marking strip (next to breakers)	10	**CHMS**
Circuit identification label (preprinted breaker labels next to breakers)	25	**CHBL**
Series rated caution label	25	**SRL**
Branch circuit numbering strip	20	**CHNS**
Bonding strap with screw	1	**BSSUSE**
CH plug-on neutral ground bonding strap	1	**BSCHPON**

Note

① Must be purchased in multiples of ordering quantities indicated.

Mechanical Interlock Covers

Covers mechanically interlock two breakers. Type A covers interlock two CH breakers mounted across from one another. Type B covers interlock a main Type CSR breaker with a Type CH.

CH8BRM Type A

CH8EFM Type B

Mechanical Interlocks

Type	Fits Loadcenter Catalog Numbers	Mechanical Interlock Trim/Deadfront Catalog Numbers: Flush	Surface
A	CH12L125B	CH8BFM	CH8BSM
	CH16L125B		
	CH12L3125B		
	CH14B100B		
	CH20L125C	CH8CFM	CH8CSM
	CH24L125C		
	CH18L3125C		
	CH24L3125C		
	CH22B100C		
	CH22N100C		
	CH24L150D	CH8DFM	CH8DSM
	CH32L150D		
	CH24L3225D		
	CH30L3150D		
	CH42L225G	CH8GFM	CH8GSM
	CH42L3225G		
	Inner cover of Box B raintight	—	CH8BRM
	Inner cover of Box C raintight	—	CH8CRM
Indoor			
B	CH24B150E	CHEFM	CHESM
	CH24B200E		
	CH32B150J	CH8JFM	CH8JSM
	CH32B200J		
	CH3242B200J		
	CH32N200J		
	CH32B225J		
	CH42B200K	CH8KFM	CH8KSM
	CH42N200K		
	CH42B225K		
	CH60BPN200N	CH8NFM	—
Outdoor			
B	CH8B150RF	CH3RDF7M	—
	CH8B200RF		
	CH8N200RF		
	CH24B150R		
	CH24B200R		
	CH32B150R	CH3RDF9M	—
	CH32B200R		
	CH32N200R		
	CH32B225R		
	CH42B200R	CH3RDF10M	—
	CH42N200R		
	CH42B225R		

CH8BRM Type A

CH8EFM Type B

Mechanical Interlocks, continued

Type	Fits Loadcenter Catalog Numbers	Mechanical Interlock Trim/Deadfront Catalog Numbers: Flush	Surface
Next Generation Power Center			
B	CHPC32B150L	CHPC8B32LFM	—
	CHPC32B200L		
	CHPC32N200L		
	CHPC42B150L	CHPC8B42LFM	—
	CHPC42B200L		
	CHPC42N200L		
	CHPC32B125TR	CH3RDF15M	—
	CHPC32B150TR		
	CHPC32B200TR		
	CHPC32N200TR		
	CHPC42B150TR	CH3RDF16M	—
	CHPC42B200TR		
	CHPC42N200TR		
	CHPC32B150TR	CH3RDF17M	—
	CHPC32B200TR		
	CHPC42B200BR	CH3RDF18M	—
Vintage ①			
	CH20JJM200	CH7JJFREPLM	—
	CH24JJM150		
	CH30JJM150		
	CH30JJM200		
	CH30JJM150H		
	CH3040JJMM200		
	CH304JJM150		
	CH304JJM200		
	CH304JJM200H		
	CH30KKM225	CH7KKFREPLM	—
	CH40KKM200H		
	CH40KKM225		
	CH40KKM200H		
	CH40KKM225H		
	CH304KKM200		
	CH304KKM200H		
	CH304LLM225	CH7LLFREPLM	—
	CH424LLM225H		

Note

① If vintage part number does not match exactly, the cover may not fit. Simple variations such as an "N" at the end of the part number contain minor design variations that will prevent our cover from working with that particular loadcenter.

DS100H1

Field Installation Rainproof Conduit Hubs

Description	Conduit Size Inches (mm)	Ordering Quantity ①	Catalog Number
Group 1—for use with 70, 100 and 125 A MLO and MCB loadcenters and circuit breaker enclosures	0.75 (19.1)	1	**DS075H1**
	1.00 (25.4)	1	**DS100H1**
	1.25 (31.8)	1	**DS125H1**
	1.50 (38.1)	1	**DS150H1**
	2.00 (50.8)	1	**DS200H1**
Group 2—for use with 150, 200 and 225 A MLO and MCB loadcenters and circuit breaker enclosures	2.00 (50.8)	1	**DS200H2**
	2.50 (63.5)	1	**DS250H2**
	3.00 (76.2)	1	**DS300H2**
Adapter kit—allows installing a Group 1 hub on devices arranged for Group 2 hubs	—	1	**DS900AP**
Group 1—small blank hub closure plate	—	1	**DS900CP1**
Group 2 —large blank hub closure plate	—	1	**DS900CP2**

GBK14

Ground Bar Kits

Description (See Legend)	Length Inches (mm)	Ordering Quantity ②	Catalog Number
●○○○○●○	2.54 (64.5)	1	**GBK5** ②
●○○○○●○■	3.59 (91.2)	1	**GBK520** ②
●○○○○●○○○○○○	4.29 (109.0)	1	**GBK10** ②
●○○○○●○○○○○○■	5.34 (135.6)	1	**GBK1020** ②
◒●◒◒◒⬓◒●◒⬓◒◒◒	4.61 (117.1)	1	**GBK13** ②
●○○○○●○○○○○○○○○	5.69 (144.5)	1	**GBK14** ②
●○○○○●○○○○○○○○○■	6.74 (171.2)	1	**GBK1420** ②
●○○○○●○○○○○○○○○○○○○○○	8.14 (206.8)	1	**GBK21** ②
●○○○○●○○○○○○○○○○○○○○○○○■	9.19 (233.4)	1	**GBK2120** ②
○○○○○○○○●○○○○○○●○○○○○○○	7.94 (201.7)	1	**CH9GP21** ③④

Ground Bar Legend

○ = (3) #14–#10 Cu/Al or (1) #14–#4 Cu/Al
■ = (1) #6–2/0 Cu/Al
⬓ = (1) 1/0–14 or (3) #10–12 Cu/Al
◒ = (1) #14–1/0 Cu/Al or (3) #14–#10 Cu/Al
● = Mounting hole

Grounded "B" Phase Adapters

Maximum Amperes	Three-Phase Loadcenter Types of Panels	Kit Catalog Number ⑤
125	12–32 circuit main lug	**CHGRD1**
225	Main lug and CHH main breaker panels	**CHGRD2**
	CC main CB panels	**CHGRD3**

Neutral Bar Accessories

Description	Catalog Number ⑤
Replacement neutral for all B and C type boxes	**CHN125C**
Replacement neutral for all D type boxes	**CHN125D**
Replacement neutral for all E, G, J, K and L type boxes	**CHN225L**
Isolated Neutral Assembly (computer circuits)	**BINA**

Notes

① Must be purchased in multiples of ordering quantities indicated.
② Distance between mounting holes is 1-3/4 inches (44.5 mm).
③ For single- and three-phase 400 A loadcenters.
④ Distance between mounting holes is 2-13/32 inches.
⑤ Cannot be used in Safety Breaker Panels. Classic Plus Panels only.

Decorator Cover Accessory

- For easy use with CH loadcenters mounted in living space
- Easily wallpapered or painted to match any decor
- Loadcenter accessory—exclusively from Eaton

Now you see it …

… Now you don't.

Decorator Cover Accessory ①

Catalog Number Corresponding Cover	Existing CH Loadcenter Cover
CH8BF	**CH8KDNB**
CH8CF	**CH8KDNC**
CH8DF/EF	**CH8KDND**
CH8GF/JF	**CH8KDNJ**
CH8KF	**CH8KDNK**

Loadcenter Goof Collars

Don't let an ugly drywall problem ruin a beautiful electrical installation.

Eaton's Goof Collar is designed to cover gaps between the finished drywall and loadcenter enclosure. This is often necessary when upgrading the electrical service and the drywall surrounding the panel is damaged. The collar allows 2 inches of overhang beyond the standard flush trim.

Before

After

CH Goof Collars

Inches (mm) Height	Width	Catalog Number Loadcenter Cover	Goof Collar
21.00 (533.4)	19.00 (482.6)	**CH8BF**	**CH8BFC1921**
26.00 (660.4)	19.00 (482.6)	**CH8CF**	**CH8CFC1926**
34.00 (863.6)	19.00 (482.6)	**CH8DF**	**CH8DFC1934**
		CH8EF	
		CHSUR8EF	
39.00 (990.6)	19.00 (482.6)	**CH8GF**	**CH8JFC1939**
		CH8JF	
42.00 (1066.8)	19.00 (482.6)	**CH8KF**	**CH8KFC1942**
		CHSUR8KF	
44.00 (1117.6)	19.00 (482.6)	**CH8LF**	**CH8LFC1944**
		CHSUR8LF	

BR Goof Collars

Inches (mm) Height	Width	Catalog Number BR Box Size	Goof Collar
21.00 (533.4)	19.00 (482.6)	**B1**	**BRB2GC2319**
23.00 (584.2)	19.00 (482.6)	**B2**	**BRB1GC2119**
25.00 (635.0)	19.00 (482.6)	**C1**	**BRC1GC2519**
27.00 (685.8)	19.00 (482.6)	**C2**	**BRC2GC2719**
31.00 (787.4)	19.00 (482.6)	**C4**	**BRC4GC3119**
34.00 (863.6)	19.00 (482.6)	**D1**	**BRD1GC3419**
38.00 (965.2)	19.00 (482.6)	**G1**	**BRG1GC3819**
43.00 (1092.2)	19.00 (482.6)	**L1**	**BRL1G4319**
48.00 (1219.2)	19.00 (482.6)	**L2**	**BRL2GC4819**

Note

① For goof collars not listed in the table, please contact the Lincoln Flex Center at 1-800-330-6479.

Dimensions

Approximate Dimensions in Inches (mm)

Residential/Commercial/Unit Enclosure—Box Sizes

Note: Box sizes do not include covers/fronts.

Residential Loadcenters

Box Size	Height	Width	Depth
NEMA Type 1 Indoor			
5	9.50 (241.3)	4.50 (114.3)	3.13 (79.4)
6	11.38 (288.9)	6.88 (174.6)	3.39 (86.1)
7	13.00 (330.2)	11.00 (279.4)	3.69 (93.7)
B	16.75 (425.5)	14.31 (363.5)	3.88 (98.4)
C	21.00 (533.4)	14.31 (363.5)	3.88 (98.4)
D	29.13 (739.8)	14.31 (363.5)	3.88 (98.4)
E	29.13 (739.8)	14.31 (363.5)	3.88 (98.4)
G	34.13 (866.8)	14.31 (363.5)	3.88 (98.4)
J	34.13 (866.8)	14.31 (363.5)	3.88 (98.4)
K	37.00 (939.8)	14.31 (363.5)	3.88 (98.4)
L	39.00 (990.6)	14.31 (363.5)	3.88 (98.4)
N	45.00 (1143.0)	14.31 (363.5)	3.88 (98.4)
NEMA Type 3R Outdoor			
5R	9.50 (241.3)	4.50 (114.3)	3.13 (79.4)
6R	11.75 (298.5)	6.50 (165.1)	4.50 (114.3)
7R	13.00 (330.2)	11.00 (279.4)	3.69 (93.7)
B	16.75 (425.5)	14.31 (363.5)	5.19 (131.8)
C	21.00 (533.4)	14.31 (363.5)	5.19 (131.8)
D	29.13 (739.8)	14.31 (363.5)	5.19 (131.8)
E	29.13 (739.8)	14.31 (363.5)	5.19 (131.8)
G	34.13 (866.8)	14.31 (363.5)	5.19 (131.8)
J	34.13 (866.8)	14.31 (363.5)	5.19 (131.8)
K	37.00 (939.8)	14.31 (363.5)	5.19 (131.8)
L	39.00 (990.6)	14.31 (363.5)	5.19 (131.8)

Commercial Loadcenters

Box Size	Height	Width	Depth
NEMA Type 1 Indoor			
P	54.38 (1381.1)	21.00 (533.4)	6.00 (152.4)
PM	62.63 (1590.7)	21.00 (533.4)	6.00 (152.4)

Types ECB and ECC Unit Enclosures

Height	Width	Depth
NEMA Type 1 Indoor		
23.25 (590.6)	8.88 (225.4)	4.50 (114.3)
NEMA Type 3R Outdoor		
23.69 (601.7)	9.31 (236.5)	5.44 (138.1)

Residential Loadcenter Knockout

Residential NEMA Type 1 Indoor and NEMA Type 3R Outdoor Enclosures.

Knockouts for Box Sizes 5, 6, 7, 5R, 6R, 7R

Code	Diameter			
A	0.50 (12.7)	—	—	—
B	0.50 (12.7)	0.75 (19.1)	—	—
C	0.50 (12.7)	0.75 (19.1)	1.00 (25.4)	—
D	0.50 (12.7)	0.75 (19.1)	1.00 (25.4)	1.25 (31.8)
E	0.75 (19.1)	1.00 (25.4)	1.25 (31.8)	—
F	0.75 (19.1)	1.00 (25.4)	1.25 (31.8)	1.50 (38.1)
G	1.00 (25.4)	1.25 (31.8)	1.50 (38.1)	—
H	1.00 (25.4)	1.25 (31.8)	1.50 (38.1)	2.00 (50.8)
I	1.25 (31.8)	1.50 (38.1)	2.00 (50.8)	—

Knockout Positions

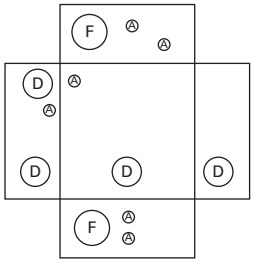

Box 5

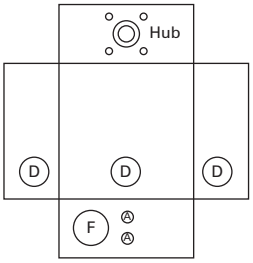

Box 5R

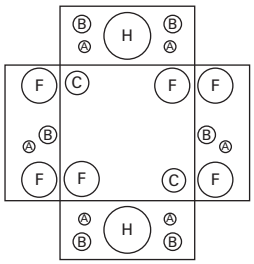

Box 6

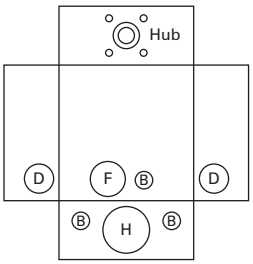

Box 6R

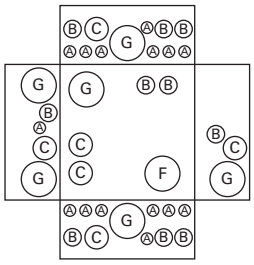

Box 7

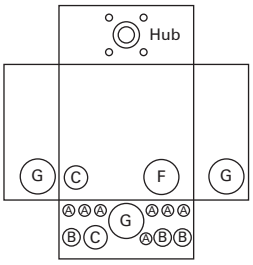

Box 7R

Approximate Dimensions in Inches (mm)

Residential and Commercial Loadcenter Knockout

Residential NEMA Type 1 indoor and NEMA Type 3R outdoor enclosures.

Knockouts for Box Sizes 8, 8R, P, PM, B, C, D, E, G, J, K, L, N and Outdoor Boxes 12–60 Circuits

Code	Diameter				
a	0.75 (19.1)	—	—	—	—
b	0.50 (12.7)	0.75 (19.1)	—	—	—
c	0.50 (12.7)	—	—	—	—
d	1.00 (25.4)	1.25 (31.8)	1.50 (38.1)	2.00 (50.8)	2.50 (63.5)
e	1.25 (31.8)	1.50 (38.1)	2.00 (50.8)	2.50 (63.5)	—
f	0.75 (19.1)	1.25 (31.8)	1.50 (38.1)	2.00 (50.8)	—
g	0.50 (12.7)	0.75 (19.1)	1.00 (25.4)	—	—
h	1.50 (38.1)	2.00 (50.8)	2.50 (63.5)	—	—
i	0.50 (12.7)	0.75 (19.1)	1.00 (25.4)	1.25 (31.8)	1.50 (38.1)
j	1.00 (25.4)	1.25 (31.8)	1.50 (38.1)	—	—
k	1.25 (31.8)	1.50 (38.1)	2.00 (50.8)	—	—
m	0.75 (19.1)	1.00 (25.4)	1.25 (31.8)	1.50 (38.1)	2.00 (50.8)
n	0.75 (19.1)	1.00 (25.4)	1.25 (31.8)	1.50 (38.1)	—
p	2.00 (50.8)	2.50 (63.5)	—	—	—

Knockout Diagram

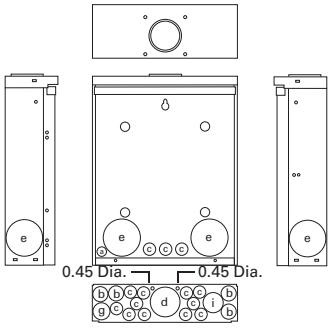

Outdoor Boxes
12–42 Circuits 225 A Maximum

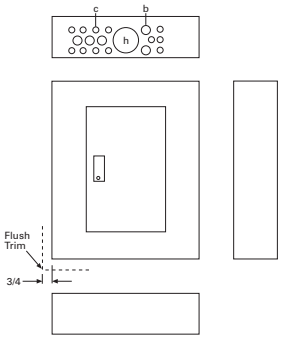

Box P, PM

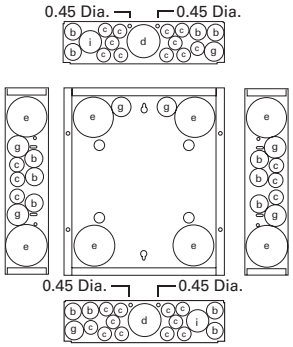

Box B

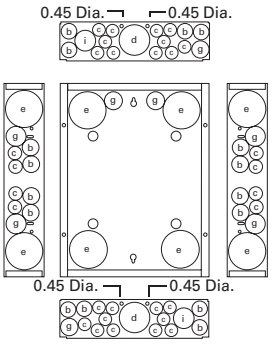

Box C, D, E, G, J, K, L, N

Type ECB and ECC Unit Enclosure Knockout

Code	Diameter				
NEMA Type 1 Indoor (Flush and Surface Trims)					
A	0.50 (12.7)	—	—	—	—
B	1.25 (31.8)	1.50 (38.1)	1.75 (44.5)	2.00 (50.8)	2.50 (63.5)
NEMA Type 3R Outdoor					
A	0.50 (12.7)	—	—	—	—
B	1.25 (31.8)	1.50 (38.1)	1.75 (44.5)	2.00 (50.8)	2.50 (63.5)

NEMA Type 1—Indoor

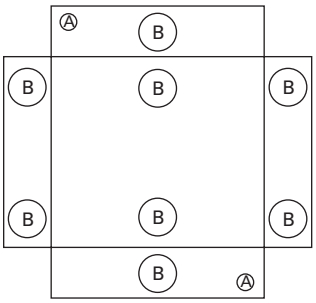

NEMA Type 3R—Outdoor

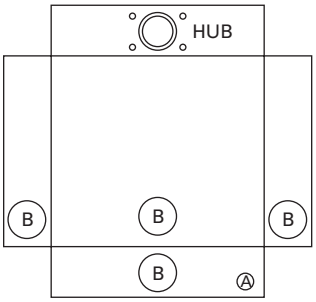

Technical Data and Specifications

General

A. The Contractor shall furnish and install loadcenters incorporating circuit breakers of the number, rating and type as specified herein and as shown on the contract drawings.

B. The loadcenter and all components shall be designed, manufactured and tested in accordance with the latest applicable standards of UL and NEMA including:

1. UL 67—standards for panelboards
2. UL 50—standards for cabinets and boxes
3. UL 489—standards for molded case circuit breakers
4. Federal Spec Classification W-C 375
5. UL 1699—all fault interrupting

Qualifications

A. The manufacturer of the loadcenter shall be the manufacturer of the circuit breaker within the load center. All breakers shall be full size.

B. For the equipment specified herein, the manufacturer shall be ISO® 9000 certified.

C. The manufacturer of this equipment shall have produced similar electrical equipment for a minimum period of seven (7) years.

Manufacturers

A. Eaton

Ratings

A. Loadcenters shall be rated for 240 Vac and shall have short-circuit ratings as shown on the drawings or as herein scheduled, but not less than 10,000 amperes rms symmetrical.

B. Breakers shall be full size and a minimum of 125 A frame. Breakers 10 –125 A trip size shall take up the same pole spacing.

C. Loadcenters shall be labeled with a UL short-circuit rating. When series ratings are applied with integral or remote devices, a label shall be provided. Series ratings shall cover all trip ratings of installed frames. It shall state the conditions of the UL series ratings including:

1. Size and type of upstream device.
2. Branch devices that can be used.
3. UL series short-circuit rating.

Construction

A. All interiors, with the exception of the branch circuit breakers shall be completely factory assembled with main breakers, main lugs or no main device.

B. Interiors shall be so designed that circuit breakers can be replaced without disturbing adjacent units and without removing the main bus connectors and shall be so designed that circuits may be changed without machining, drilling or tapping.

C. Physical means must be provided to prevent the installation of more overcurrent devices than that number for which the enclosure was designed. Full size breakers are required.

Bus

A. Busbars for the main and cross connectors shall be of silver flash plated copper construction in accordance with UL standards. Bussing shall be braced to 65 kAIC.

B. Neutral bussing shall have a suitable lug for each outgoing feeder requiring a neutral connection of same ampacity as branch.

Wiring/Termination

A. All wire connectors and terminals shall be of the anti-turn solderless type and suitable for copper or aluminum wire of the sizes indicated. All connectors shall meet the "Requirements for Wire Connectors and Soldering Lugs" UL 486B.

B. All loadcenters where marked shall be suitable for use with 60/75 °C rated wire.

Circuit Breakers

A. Circuit breakers shall be molded case type, 3/4-inch (19.1 mm) wide per pole. Multipole circuit breakers shall be of a stack pole design to provide electrical phase isolation and have an internal common trip.

B. Each pole of the circuit breaker will have inverse time delay overload and instantaneous short-circuit protection by means of both thermal and magnetic sensors. Circuit breakers shall be quick-make/quick-break.

C. The circuit breaker calibration shall not be affected by environmental changes in relative humidity. Breakers shall be calibrated after assembly.

D. All circuit breakers shall be operated by a toggle-type handle and multipole circuit breakers shall have an internal common trip mechanism. The circuit breakers shall incorporate trip mechanisms that are mechanically trip-free from the handle. The handle position shall provide good visual trip indication.

E. Contacts shall be of non-welding silver alloy.

F. All branch breaker handles shall be of a different color than the case of the breaker.

G. All terminals shall be listed for use with copper or aluminum conductors. Terminals shall be of the box lug design. The terminals shall meet UL 486B requirements and shall be suitable for use with either 60 °C or 75 °C wire.

H. Breakers shall be SWD rated and/or HACR rated as required.

I. Arc fault interrupting circuit breakers, (AFC), shall be provided on all 15 and 20 A single-phase 120/240 Vac circuits except those indicated as remote controlled breakers. AFI breakers shall be "Classified for mitigating the effects of arcing faults," or conforming to UL Standard 1699 and as defined by per Article 210.12 Section A of the NEC Code.

Enclosures

A. Loadcenters shall have NEMA 1 general purpose or NEMA 3R rainproof enclosures as indicated on the drawings and shall be surface or flush mounted except where noted.

B. For indoor applications, enclosures shall be rated NEMA 1. Enclosures shall be manufactured from cold-rolled code-gauge sheet steel having multiple knockouts and painted per paint specification. For outdoor applications, enclosures shall be rated NEMA 3R. Enclosures shall be manufactured from galvanized steel which shall be painted per the painted as specified. Enclosures shall be of sufficient size to meet or exceed NEC wire bending space.

C. The cover shall have an easy adjustment feature for flush applications.

D. Boxes shall be factory assembled into a single rigid structure.

E. Provide circuit breaker marking labels and directories.

Finish

A. Boxes and trims shall be finished with a high scratch-resistant aesthetically pleasing finish. The finish shall be polyurethane coating electrostatically applied to a thickness of 1.8 to 2 mils.

All loadcenters shall be provided with provisions for accepting a paintable or wall paperable decorator accessory cover. Where loadcenters are installed in living areas, provide manufacturer designed and tested decorator cover kits.

Plug-On Circuit Breakers

Contents

Description	*Page*
Overview	**V1-T1-2**
CH Specialty Products	**V1-T1-14**
CH Loadcenter Options and Accessories	**V1-T1-22**
CH Circuit Breakers	
Product Selection	**V1-T1-32**
Options and Accessories	**V1-T1-38**
Technical Data and Specifications	**V1-T1-40**
Wiring Diagrams	**V1-T1-40**

CH Circuit Breakers

Product Description

Quick-make, quick-break switch mechanism combined with inverse time element tripping operation and trip-free handle design. Type CH circuit breakers trip to the OFF position, eliminating nuisance callbacks. The CHF family also includes a trip flag to differentiate between a trip and the breaker being turned off. The thermal-magnetic trip curve avoids nuisance tripping on mild overloads while reacting almost instantaneously to severe short-circuit conditions. Multipole breakers have internal common trip connection to operate all poles simultaneously. Handles are marked with ON-OFF indication and ampere rating of the breaker.

Special Application Plug-On Circuit Breakers—Type CH 10 kAIC 120 Vac and 120/240 Vac

Branch Feeder Type Arc Fault Circuit Breakers
A branch feeder type arc fault circuit interrupter is a device intended to mitigate high current arcing faults in the complete circuit, including connected cords. High current arcing faults can occur from line to neutral or line to ground. These arcing faults are in parallel with the load and produce the most energy of all arcing faults.

The branch feeder type AFCI is required in the 1999 and 2002 National Electrical Code.

The Combination Type AFCI is required in all subsequent editions of the National Electrical Code.

Combination Type Arc Fault Circuit Breakers
A combination type arc fault circuit interrupter is a device that offers mitigation of high current arcing faults in the complete circuit, including connected cords. In addition it provides direct detection of persistent low current arcing faults down to 5 amps with associated mitigation of fire hazards in the cords connected to the outlets. High current arcing faults can occur from line to neutral or line to ground. These arcing faults are in parallel with the load and produce the most energy of all arcing faults. The current level of low current arcing faults is limited by the load.

Ground Fault Circuit Breakers—Ground Fault Application Notes
Single-pole Type CHGFIs are designed for use in two-wire, 120 Vac circuits. The diagram on **Page V1-T1-40** shows a typical wiring configuration.

Two-pole Type CHGFIs are designed for use in three-wire, 120/240 Vac circuits, 120 Vac multiwire circuits employing common, neutral and two-wire, 240 Vac circuits obtained from a 120/240 Vac source.

Diagrams on **Page V1-T1-40** illustrate typical wiring configurations for 120/240 Vac multiwire circuits.

The diagram on **Page V1-T1-40** depicts a 240 Vac, two-wire circuit. Note the "panel neutral" conductor connects to the neutral bar, even though the neutral is not included in the load circuit. This connection is necessary to supply a 120 Vac power source to the ground fault sensing circuit.

The figures are shown with a 120/240 Vac, single-phase, three-wire power source, but are also applicable to a 120/208 Vac, three-phase, four-wire power supply. For all figures, the electrical operation of the Type CHGFI is not affected by the equipment ground.

Features

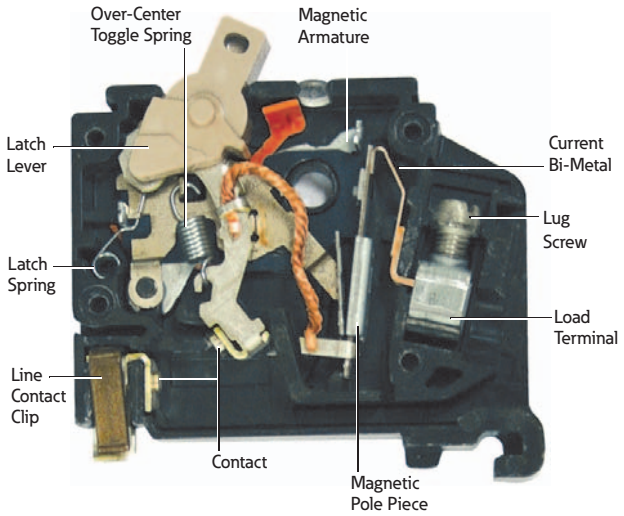

1

Product Selection

10 kAIC, 120 Vac, 120/240 Vac and 240 Vac

Type CH Plug-On Circuit Breakers

Type CH Breakers, 3/4-Inch (19.1 mm) per Pole 120, 120/240 or 240 Vac, 10 kAIC

Ampere Rating	Wire Size Range Cu/Al 60 °C or 75 °C	Catalog Number Single-Pole 120/240 Vac Requires One 3/4-Inch (19.1 mm) Space 10 per Shelf Carton	Two-Pole 120/240 Vac Common Trip Requires Two 3/4-Inch (19.1 mm) Spaces 5 per Shelf Carton	Three-Pole 240 Vac Common Trip Requires Three 3/4-Inch (19.1 mm) Spaces 5 per Shelf Carton
10	(1) #14–8 ① (2) #14–10 ①② (1) #14–6 ③	**CH110**	**CH210**	**CH310**
15		**CH115** ⑦⑧	**CH215** ⑧	**CH315** ⑧
20		**CH120** ⑦⑧	**CH220** ⑧	**CH320** ⑧
25		**CH125** ⑧	**CH225** ⑧	**CH325** ⑧
30		**CH130** ⑧	**CH230** ⑧	**CH330** ⑧
35	#14–2 ① #14–6 ③	**CH135** ⑧	**CH235** ⑧	**CH335** ⑧
40	#10–1/0 ④ #14–2 ⑤ #3/0 ⑥	**CH140** ⑧	**CH240** ⑧	**CH340** ⑧
45		**CH145** ⑧	**CH245** ⑧	**CH345** ⑧
50		**CH150** ⑧	**CH250** ⑧	**CH350** ⑧
60		**CH160**	**CH260**	**CH360**
70		**CH170**	**CH270**	**CH370**
80		—	**CH280**	**CH3080**
90		—	**CH290**	**CH3090**
100		—	**CH2100**	**CH3100**
110		—	**CH2110**	—
125		—	**CH2125**	—

Type CH Plug-On Circuit Breakers

CHF Breakers with Mechanical Trip Flag

Ampere Rating	Wire Size Range Cu/Al 60 °C or 75 °C	Catalog Number Single-Pole 120/240 Vac Requires One 3/4-Inch (19.1 mm) Space 10 per Shelf Carton	Two-Pole 120/240 Vac Common Trip Requires Two 3/4-Inch (19.1 mm) Spaces 5 per Shelf Carton
10	(1) #14–8 ① (2) #14–10 ①②	**CHF110**	**CHF210**
15		**CHF115** ⑦⑧	**CHF215** ⑧
20		**CHF120** ⑦⑧	**CHF220** ⑧
25		**CHF125** ⑧	**CHF225** ⑧
30		**CHF130** ⑧	**CHF230** ⑧
35	#14–2 ①	**CHF135** ⑧	**CHF235** ⑧
40	#10–1/0 ④ #14–2 ⑤	**CHF140** ⑧	**CHF240** ⑧
45		**CHF145** ⑧	**CHF245** ⑧
50		**CHF150** ⑧	**CHF250** ⑧

Notes

① For single- and two-pole breakers.
② Solid and stranded wire can be used together.
③ For three-pole breakers.
④ Single-pole 60–70 A, two-pole 80–125 A, three-pole 40–100 A.
⑤ Single-pole 40–50 A, two-pole 40–70 A.
⑥ Two-pole 150 A.
⑦ Switching duty rated.
⑧ HACR rated.

For factory-installed options, refer to **Page V1-T1-39.**

Type CH AF/GF Single-Pole Circuit Breaker

Type CH AFCI Single-Pole Circuit Breaker

Dual Purpose Arc Fault/Ground Fault 3/4-Inch (19.1 mm) Wide Circuit Breakers, Type CH, 120 Vac—10 kAIC ①②

Poles	Ampere Rating	Configuration	Catalog Number
Single-pole 10 kAIC	15	Combination AFCI GFCI	**CHFAFGF115** ③
	20	Combination AFCI GFCI	**CHFAFGF120** ③
Single-pole, plug-on neutral 10 kAIC	15	Combination AFCI GFCI	**CHFAFGF115PN**
	20	Combination AFCI GFCI	**CHFAFGF120PN**

Plug-On Branch Feeder Type Arc Fault Circuit Breakers, Type CH 10 kAIC, 120 Vac and 120/240 Vac

Type CH AFCI Single-Pole Circuit Breaker

Combination Type CH AFCI 3/4-Inch (19.1 mm) Wide Circuit Breakers

Poles	Ampere Rating	Catalog Number
Standard Pigtail		
Single-pole 10 kAIC	15	**CHFCAF115**
	20	**CHFCAF120**
Two-pole 10 kAIC	15	**CH215CAF**
	20	**CH220CAF**

Type CH AFCI Single-Pole Circuit Breaker

Branch Type CH AFCI 3/4-Inch (19.1 mm) Wide FIRE-GUARD® Circuit Breakers

Poles	Ampere Rating	Configuration	Catalog Number
Single-pole 10 kAIC	15	AFCI	**CH115AF** ③
	20	AFCI	**CH120AF** ③
Two-pole 10 kAIC ④⑤	15	AFCI common trip	**CH215AF**
	20	AFCI common trip	**CH220AF**

Plug-On Combination Type Arc Fault Circuit Breakers and Ground Fault, Type CH 10 kAIC, 120 Vac and 120/240 Vac ⑥

Type CH AFCI Single-Pole PON Combo Circuit Breaker

Combination Type CH AFCI 3/4-Inch (19.1 mm) and CHGFCI Circuit Breakers

Poles	Ampere Rating	Configuration	Catalog Number
Single-pole 10 kAIC	15	AFCI plug-on neutral	**CHFCAF115PN**
	20	AFCI plug-on neutral	**CHFCAF120PN**
	15	GFCI plug-on neutral	**CHFGF115PN**
	20		**CHFGF120PN**
	25		**CHFGF125PN**
	30		**CHFGF130PN**

Notes

① Breaker qualifies as combination arc fault, per UL 1699.
② Breaker qualifies as personnel protection ground fault, (5 mA) per UL 943.
③ Clamshell packaging available with CS modification code on the end of catalog number.
④ Common trip refers to two-pole 240 V load application sourced by 120/240 Vac (see diagram on **Page V1-T1-40**).
⑤ Independent trip refers to two-pole multi-wire, home run or shared neutral circuits (see diagrams on **Page V1-T1-40**).
⑥ Requires plug-on neutral loadcenter.

Plug-On Ground Fault Circuit Breakers, Type CH 10 kAIC, 120 Vac and 120/240 Vac

Type CH Single-Pole

Type CH Ground Fault Circuit Breakers (5 Milliampere) 3/4-Inch (19.1 mm) per Pole 120 Vac or 120/240 Vac,10 kAIC

Ampere Rating	Wire Size Range Cu/Al 60 °C or 75 °C ①	Catalog Number—1 per Shelf Carton Single-Pole 120 Vac Requires One 3/4-Inch (19.1 mm) Space	Two-Pole 120/240 Vac Common Trip Requires Two 3/4-Inch (19.1 mm) Spaces
15	#14–6	CHFGF115	CH215GF
20	#14–6	CHFGF120	CH220GF
25	#14–6	CHFGF125	CH225GF
30	#14–6	CHFGF130	CH230GF
35	#14–6	—	CH235GF
40	#14–6	—	CH240GF
45	#14–6	—	CH245GF
50	#14–6	—	CH250GF
60	#14–6 ①	—	CH260GF

Type CH Two-Pole

Type CH Ground Fault Equipment Protectors (30 Milliampere) 3/4-Inch (19.1 mm) per Pole 120 Vac or 120/240 Vac, 10 kAIC

Ampere Rating	Wire Size Range Cu/Al 60 °C or 75 °C ①	Catalog Number—1 per Shelf Carton Single-Pole 120 Vac Requires One 3/4-Inch (19.1 mm) Space	Two-Pole 120/240 Vac Common Trip Requires Two 3/4-Inch (19.1 mm) Spaces
15	#14–6	CHFEP115	CH215EPD
20	#14–6	CHFEP120	CH220EPD
25	#14–6	CHFEP125	—
30	#14–6	CHFEP130	CH230EPD
40	#14–6	—	CH240EPD
50	#14–6	—	CH250EPD
60	#14–6 ①	—	CH260EPD

Type CH Switching Neutral Breakers—10 kAIC, 120 Vac and 120/240 Vac

Used to open the neutral along power line(s) for applications of gas pumps.

CH220SW

3/4-Inch (19.1 mm) per Pole 120/240 or 240 Vac, 10 kAIC

Ampere Rating	Wire Size Range Cu/Al 60 °C or 75 °C	Catalog Number—1 per Shelf Carton Two-Pole 120 Vac Common Trip Requires Two 3/4-Inch (19.1 mm) Spaces (Hot leg) Neutral Out Neutral In	Three-Pole 120/240 Vac Common Trip Requires Three 3/4-Inch (19.1 mm) Spaces Phase Phase Neutral Out Neutral In
15	#14–8	CH215SW ②	CH315SW ③
20	#14–8	CH220SW ②	CH320SW ③
30	#14–8	CH230SW ②	CH330SW ③
40	#14–8	CH240SW ②	CH340SW ③
50	#14–8	CH250SW ②	CH350SW ③

Notes

① 60 A breaker listed for 75 °C Cu wire only.

② For circuit breakers with shunt trip, add ST suffix. Shunt trip requires one additional pole space.

③ Switching duty rated.

Type CH-HID Circuit Breakers—10 kAIC, 120 Vac, 120/240 and 240 Vac

Suitable for use in circuits for fluorescent and high intensity discharge lighting. Also suitable for HACR applications.

3/4-Inch (19.1 mm) per Pole 120 Vac, 120/240 and 240 Vac, 10 kAIC

Ampere Rating	Wire Size Range Cu/Al 60 °C or 75 °C	Single-Pole 120/240 Vac Requires One 3/4-Inch (19.1 mm) Space 10 per Shelf Carton Catalog Number	Two-Pole 240 Vac Common Trip Requires Two 3/4-Inch (19.1 mm) Spaces 5 per Shelf Carton Catalog Number	Three-Pole 240 Vac Common Trip Requires Three 3/4-Inch (19.1 mm) Spaces 5 per Shelf Carton Catalog Number
15	#14–8	**CH115HID**	**CH215HID** ①	**CH315HID**
20	#14–8	**CH120HID**	**CH220HID**	**CH320HID**
30	#14–8	**CH130HID**	**CH230HID**	**CH330HID**

Type CHT Twin 10 kAIC, 120/240 Vac, Universal CTL and Non-CTL Plug-On Circuit Breakers

Suitable for CTL and Non-CTL CH loadcenters.

Type CH and CHT Circuit Breakers Mounted in Twin Breaker Panel

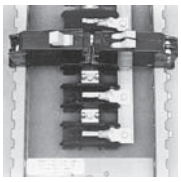

Twin (CTL) 3/4-Inch (19.1 mm) per Pole 120 Vac Class CTL 10 kAIC

Ampere Rating	Wire Size Range Cu/Al 60 °C or 75 °C	Single-Pole Requires One 3/4-Inch (19.1 mm) Space 10 per Shelf Carton Catalog Number 120/240 Vac 120/240 Vac
15–15	#14–8	**CHT1515** ②③
15–20	#14–8	**CHT1520** ②③
20–20	#14–8	**CHT2020** ②③

Notes

① CH215HID is rated for 120/240 V.
② Switching duty rated.
③ HACR rated.

Type CHP Commercial Breakers—10 kAIC, 120 Vac, 120/240 Vac and 240 Vac

Note: CHP breakers feature on-off and trip positions for commercial applications.

3/4-Inch (19.1 mm) per Pole 120, 120/240 or 240 Vac, 10 kAIC

Ampere Rating	Wire Size Range Cu/Al 60 °C or 75 °C	Single-Pole 120/240 Vac Requires One 3/4-Inch (19.1 mm) Space 10 per Shelf Carton Catalog Number	Two-Pole 120/240 Vac Common Trip Requires Two 3/4-Inch (19.1 mm) Spaces 5 per Shelf Carton Catalog Number	Three-Pole 240 Vac Common Trip Requires Three 3/4-Inch (19.1 mm) Spaces 5 per Shelf Carton Catalog Number
10	(1) #14–8 ① (2) #14–10 ①② (1) #14–6 ③	**CHP110**	**CHP210**	**CHP310**
15		**CHP115** ⑥⑦	**CHP215** ⑦	**CHP315** ⑦
20		**CHP120** ⑥⑦	**CHP220** ⑦	**CHP320** ⑦
25		**CHP125** ⑦	**CHP225** ⑦	**CHP325** ⑦
30		**CHP130** ⑦	**CHP230** ⑦	**CHP330** ⑦
35	#14–2 ① #14–6 ③	**CHP135** ⑦	**CHP235** ⑦	**CHP335** ⑦
40	#10–1/0 ④ #14–2 ⑤	**CHP140** ⑦	**CHP240** ⑦	**CHP340** ⑦
45		**CHP145** ⑦	**CHP245** ⑦	**CHP345** ⑦
50		**CHP150** ⑦	**CHP250** ⑦	**CHP350** ⑦
60		**CHP160** ⑦	**CHP260** ⑦	**CHP360** ⑦
70		**CHP170**	**CHP270**	**CHP370**
80		—	**CHP280**	—
90		—	**CHP290**	—
100		—	**CHP2100**	**CHP3100**
110		—	**CHP2110**	—
125		—	**CHP2125**	—

Type CHP-GFCI Circuit Breakers—10 kAIC, 120 Vac and 120/240 Vac

Note: CHP breakers offer on-off and trip positions for commercial applications.

5 Milliampere—3/4-Inch (19.1 mm) per Pole 120 V and 120/240 Vac, 10 kAIC

Ampere Rating	Wire Size Range Cu/Al 60 °C or 75 °C	Single-Pole 120 Vac Requires One 3/4-Inch (19.1 mm) Space 1 per Individual Carton Catalog Number
15	#14–6	**CHP115GF**
20	#14–6	**CHP120GF**
30	#14–6	**CHP130GF**

Notes

① For single- and two-pole breakers.
② Solid and stranded wire can be used together.
③ For three-pole breakers.
④ Single-pole 60–70 A, two-pole 80–125 A, three-pole 40–100 A.
⑤ Single-pole 40–50 A, two-pole 40–70 A.
⑥ Switching duty rated.
⑦ HACR rated.

CHP breakers offer on-off and trip positions for commercial applications.

Type CHP Neutral Switching Breakers—10 kAIC, 120 Vac and 120/240 Vac

Used to open the neutral along power line(s) for applications of gas pumps.

3/4-Inch (19.1 mm) per Pole 120 or 120/240 Vac, 10 kAIC

Ampere Rating	Wire Size Range Cu/Al 60 °C or 75 °C	Two-Pole 120 Vac Common Trip Requires Two 3/4-Inch (19.1 mm) Spaces 1 per Shelf Carton Catalog Number (Hot leg) Neutral Out Neutral In	Three-Pole 120/240 Vac Common Trip Requires Three 3/4-Inch (19.1 mm) Spaces 1 per Shelf Carton Catalog Number Phase Phase Neutral Out Neutral In
15	#14–8	**CHP215SW** ①	**CHP315SW** ①
20	#14–8	**CHP220SW** ①	**CHP320SW** ①

Type CH-M50 High Ambient Breaker

3/4-Inch (19.1 mm) per Pole 120 or 120/240 Vac, 10 kAIC

Ampere Rating	Wire Size Range Cu/Al 60 °C or 75 °C	Single-Pole 120/240 Vac Requires One 3/4-Inch (19.1 mm) Space 10 per Shelf Carton Catalog Number	Two-Pole 120/240 Vac Common Trip Requires Two 3/4-Inch (19.1 mm) Spaces 5 per Shelf Carton Catalog Number
15	(1) #14–8 (2) #14–10	**CH115M50**	**CH215M50**
20		**CH120M50**	**CH220M50**
25		**CH125M50**	**CH225M50**
30		**CH130M50**	**CH230M50**
35		**CH135M50**	**CH235M50**
40		**CH140M50**	**CH240M50**
45		**CH145M50**	**CH245M50**
50		**CH150M50**	**CH250M50**
60		—	**CH260M50**
70		—	**CH270M50**

Type CH-HM and CHP-HM High Magnetic Breakers

3/4-Inch (19.1 mm) per Pole 120 or 120/240 Vac, 10 kAIC

Ampere Rating	Wire Size Range Cu/Al 60 °C or 75 °C	Single-Pole 120/240 Vac Requires One 3/4-Inch (19.1 mm) Space 10 per Shelf Carton Catalog Number	Two-Pole 120/240 Vac Common Trip Requires Two 3/4-Inch (19.1 mm) Spaces 5 per Shelf Carton Catalog Number
15	(1) #14–8 (2) #14–10	**CH115HM**	**CH215HM**
20		**CH120HM**	**CH220HM**
15	(1) #14–8 (2) #14–10	**CHP115HM**	**CHP215HM**
20		**CHP120HM**	**CHP220HM**

Note

① For circuit breakers with shunt trip, add ST suffix. Shunt trip requires one additional pole space, obtain pricing from **Page V1-T1-39**.

1 Options and Accessories

CHHT

CHPL

CHPLGF

MCBPL

CHLO

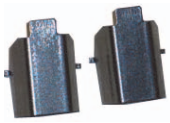

CH125RB

CH9MB270

CHML

Field Installation Kits and Parts

Description	Ordering Quantity ①	Catalog Number
Handle Ties ②		
Handle tie bar for physically joining the handles of two adjacent single-pole Type CH circuit breakers (molded plastic handle cover)	25	**CHHT**
Handle Lockoffs ③④		
Padlockable device for locking the handle of single-, two- or three-pole Type CH circuit breakers (escutcheon mounted) ⑤	1	**CHPL**
Padlockable device for locking the handle of a single-, two- or three-pole Type CHGFI circuit breaker (escutcheon mounted) ⑤	1	**CHPLGF**
Padlockable device for locking the handle of main circuit breaker Types CC and CCH into the ON or OFF position.(screw mounted) ⑥	1	**CCPL**
Padlockable device for locking the handle of main breaker Types BW and CSR into the ON or OFF position (escutcheon mounted) ⑤	1	**MCBPL**
Handle Lockdogs ④⑦		
Device used to secure handle in ON or OFF position for single-pole Type CH circuit breakers (handle mounted) ⑧	10	**CHLO**
Hold-Down Kits ⑨		
Hold-down retainer kit for single-, two-, three-pole Type CH circuit breakers. For 6–24 circuit 125 A single- and three-phase, 12–42 circuit single-phase 225 A and 24–42 circuit three-phase 225 A MLO Type CH loadcenters	1	**CH125RB**
Hold-down retainer kit for single-, two-, three-pole Type CH circuit breakers for 2–4 circuit MLO CH loadcenters.	1	**CH125RB24**
Mounting Bases		
Mounting base for two-pole Type CH circuit breaker—70 A maximum	1	**CH9MB270**
Main Breaker Lug Kits		
Types CC and CCH main breaker lug kit (2) 300 kcmil	1	**CCL300**
Type CSR main breaker lug kit (2) 300 kcmil	1	**MCBL300**
Mechanical Interlock		
Type CH for two-, three- and four-pole breakers	10	**CHML ⑩**

Notes

① Must be purchased in multiples of ordering quantities indicated.
② Handle ties: typically used to join two similar independent single-pole breakers to form a two-pole noncommon trip breaker.
③ Handle lockoffs: devices that use a padlock to lock the circuit breaker's handle in the ON or OFF position.
④ Requires one additional pole space.
⑤ Escutcheon mounted: device mounted semipermanently to the face of the circuit breaker and secured by the loadcenter deadfront.
⑥ Screw mounted: device permanently mounted to the face of the circuit breaker by the use of a non-removable screw.
⑦ Handle lockdogs: devices that are used to secure a circuit breaker's handle in the ON or OFF position. Handle lockdogs are not padlockable devices.
⑧ Handle mounted: device mounted above or below handle using spring pressure.
⑨ Hold-down kits: devices used to secure the circuit breaker to the loadcenter for back-feed main application. See NEC Article 384.16(g).
⑩ CHML not suitable to transfer emergency power.

Shunt Trip Options

Description Type	Volts	Catalog Number Suffix Adder ①
CSR	12 DC	**SR12**
CSR	24 DC	**SR24**
CSR	120 AC	**SR01**
CH	120 AC	**ST** ②
CC	12 DC	**SR12**
CC	24 DC	**SR24**
CC	120 AC	**SR01**
CC	208 AC	**SR08**
CC	240 AC	**SR02**

Handle Position Changeability Chart

	To Change Handle Position from ON to OFF or OFF to ON You Must...		
Handle Lockoff and Lockdog Types	**Remove Padlock**	**Remove Device**	**Remove Loadcenter Deadfront**
Lockoff escutcheon mounted	Remove	—	—
Lockoff screw mounted	Remove	—	—
Lockdog handle mounted	N/A	Remove	—

Notes

① Add suffix indicated to end of breaker catalog number.

② Requires one additional pole space.

Technical Data and Specifications

Ratings

Single- and two-pole CH breakers rated 15 and 20 A have low instantaneous magnetic trip levels. The 15 and 20 A breakers with "HM" suffix have high magnetic trip settings recommended for circuits with inherently high inrush currents. All Type CH breakers are marked for heating, air conditioning and refrigeration (HACR) equipment application. Single-pole 15–20 A breakers are also suitable for switching duty (SWD). Shunt trip coils operate on 120 Vac and require one additional pole space per breaker.

Wiring Diagrams

Typical Single-Pole

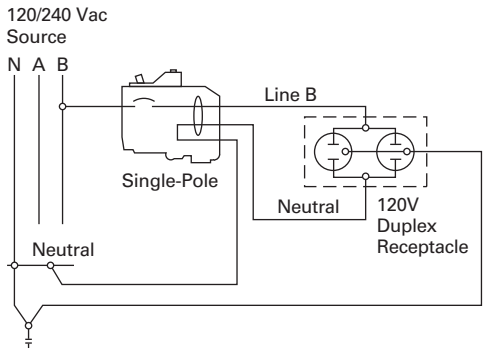

Two-Pole 240 V Load Application Sourced by 120/240 Vac

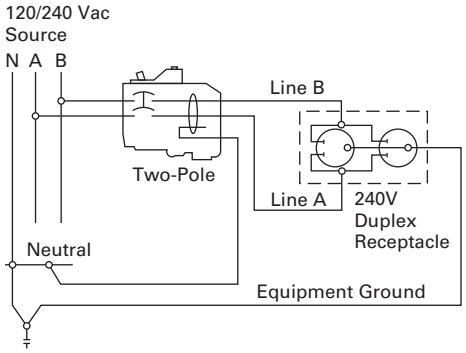

Single-Pole 120 V Load Application Sourced by 120/240 Vac

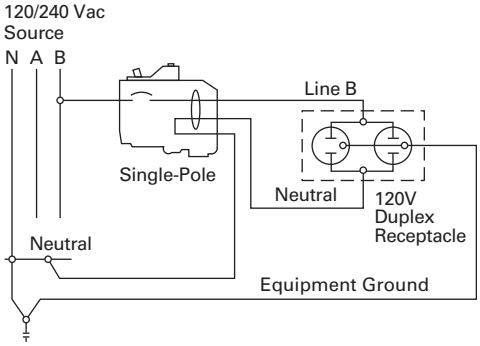

Two-Pole Shared Neutral with Duplex Receptacle Application

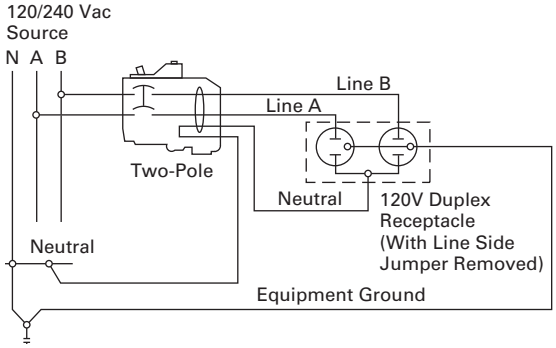

Two-Pole Shared Neutral with Multi-Duplex Receptacle Application

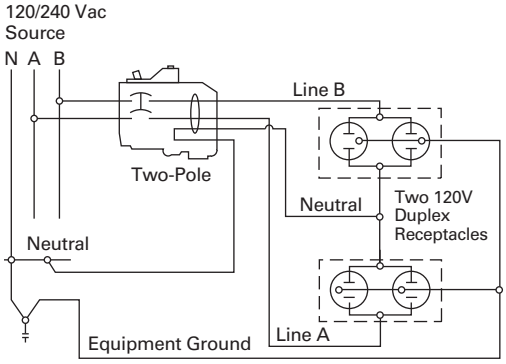

Single-Pole 120 V Duplex Receptacle Application

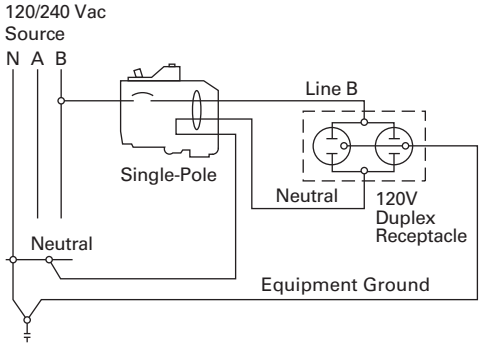

Two-Pole 120 V Multi-Duplex Receptacle Application

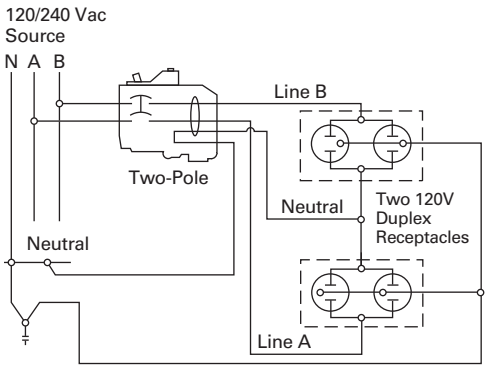

Two-Pole 120 V Duplex Receptacle Application

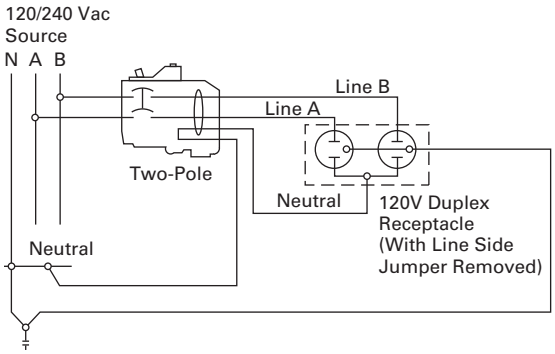

Two-Pole 240 V Duplex Receptacle Application

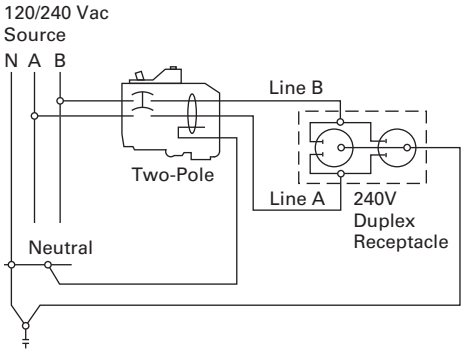

Type BR Loadcenters and Circuit Breakers

Contents

Description	*Page*
Overview	
Product Description	**V1-T1-43**
Features, Benefits and Functions	**V1-T1-43**
Standards and Certifications	**V1-T1-45**
Catalog Number Selection	**V1-T1-45**
Product Selection	**V1-T1-46**
BR Specialty Products	
BR Quick Connect Neutral Loadcenters	**V1-T1-57**
Spa Panels	**V1-T1-58**
Riser Panel	**V1-T1-59**
Type BR Renovation Loadcenter	**V1-T1-60**
Type BR Mechanical Interlock Kits	**V1-T1-62**
Type BR Retrofit Interior Kits	**V1-T1-73**
BR Circuit Breakers	**V1-T1-76**

Overview

Product Selection Guide

BR Loadcenters

Description

Service	
Single-phase, three-wire, 120/240 Vac	Three-phase, four-wire, 208Y/120 Vac Three-phase, three-wire, 240 Vac delta
Short-Circuit Current Rating	
10 kAIC: All single- and three-phase loadcenters 70–225 A, 8 to 42 circuits 22 kAIC: All convertible loadcenters using 125 A rated Type BRH main breakers or selected factory installed 125 A rated Type BRH main breaker	25 kAIC: All convertible and factory-installed single-phase loadcenters rated 150 and 200 A using Type CSR main breakers
Main Breaker/Main Lug Loadcenters	
Single-phase Main breaker: 100, 125, 150, 200, 225, 400, 600 A Main lugs: 70, 125, 150, 200, 225, 400, 600 A	Three-phase Main breaker: 100, 125, 150, 200, 225, 400, 600 A Main lugs: 100, 125, 150, 200, 225, 400, 600 A
Convertible Loadcenters	
Main breaker: single-phase up to 200 A and three-phase up to 225 A	Main lugs: single-phase up to 200 A and three-phase up to 150 A
Branch Breakers	
Types BR, BRH and BRHH: 10–150 A. single-, two- and three-pole; selected amperage available in switching duty, HACR, shunt trip and high magnetic setting Type GFCB: 15–60 A Types BJ and BJH: 125–225 A; two- and three-pole Type BD Twin: 10–50 A; two of one-pole; take one 1-inch (25.4 mm) space	Type BQ and BQC Multibreaker: 15–30 A. Two of two-pole or one two-pole and two one-pole; takes two 1-inch (25.4 mm) spaces Type BRW: 15–30 A; two-pole water heater breakers Type BRSN: 15–30 A; two-pole switching neutral breakers Type BR 15–100 A; two-pole, 240 Vac delta breakers BR-AFCI arc fault circuit interrupter
Enclosures	
NEMA Type 1 indoor NEMA Type 3R outdoor	NEMA 4X Meets or exceeds UL requirements for indoor or outdoor applications
Loadcenter and Breaker Accessories	
Branch circuit breaker: Auxiliary components, Hold-down kits, Handle ties, Lockoffs, Lockdogs Complete line of ground bar kits 5, 10, 14 and 21 circuit, some with additional #2/0 lugs; each terminal will accommodate: (3) #14–#10 Cu/Al or (1) #14–#4 Cu/Al Main and sub-feed lugs 125, 150, 225 A—two- and three-pole Shunt trips	Surge protection: Single-phase plug-on surge protector, Single-phase bottle type surge protector, Three-phase bottle type surge protector, Single-phase whole home surge protector Universal rainproof conduit hubs Group One: 3/4, 1, 1-1/4, 1-1/2, 2 inches (19.1, 25.4, 31.8, 38.1, 50.8 mm) Group Two: 2, 2-1/2, 3 inches (50.8, 63.5, 76.2 mm) Adapter plate
Bussing	
Tin-plated aluminum as standard	Limited copper bus panels available

Product Description

Loadcenters are enclosures specifically designed to house the branch circuit breakers and wiring required to distribute power to individual circuits. They contain either a main breaker when used at the service entrance point or a main lug when used as a sub-panel to add circuits to existing service. The main breaker protects the main entire panel and can be used as a service disconnect. The branch breakers protect the wires leading to individual electrical loads such as fixtures and outlets.

Features, Benefits and Functions

Loadcenter Construction

Eaton's Type BR loadcenters have standard tin-plated aluminum bus with a limited availability of copper bus. The sum of the handle ratings connected to any stab is limited to 150 A maximum on the 100 and 125 A loadcenters, and 200 A on loadcenters with 150 A or higher main bus. NEMA Type 1 boxes or enclosures are manufactured from galvanized steel. Raintight boxes are manufactured from galvanized steel, then finished using an electrostatic powder coat, baked urethane paint process.

Neutrals

Eaton Type CH loadcenters feature two types of neutrals:

Insulated/Bondable Split Neutral

Panels are supplied with split insulated neutrals with an insulated cross strap. For service entrance applications, the neutral must be bonded by using the bonding strap supplied with the panel. For non-service entrance (sub-panel) applications, the panel may be installed with the bonding strap not connected to the neutral. Separate ground bars must be used on non-service entrance panels.

Insulated/Bondable Single Neutral

Panels are supplied with a single insulated neutral. For service entrance applications, all that is required to bond the neutral is to loosen the bonding screw and the neutral screw directly beside it, insert the bonding strap into the neutral bar, and re-tighten both connections. The single neutral can be moved by the contractor to the other side of the panel, if desired. When used as a service entrance panel, unused neutral connections may be used for the termination of equipment grounds. For non-service entrance (sub-panel) applications, the panel may be installed with the bonding strap not connected to the neutral. Separate ground bars must be used on non-service entrance panels.

Grounds

In service entrance applications where the neutral is bonded, unused neutral holes may be used for terminating ground conductors. In sub-feed panels, the neutral must be isolated (non-bonded), and ground wires must be terminated on a separate ground bar.

The insulated/bondable single/split neutral panels have sufficient terminations for both ground and neutral conductors. The insulated/bondable single split neutral panels are supplied with a separate factory-installed ground bar if the catalog number contains a "G." If not, a separate ground bar should be installed. Insulated/Bondable Single Neutral panels are supplied without a ground bar (unless otherwise noted), and ground bar kits if needed must be purchased separately.

Neutral and Ground Terminals

The standard terminals on grounds and neutrals are rated to accept (3) #14–#10 Cu/Al or (1) #14–4, provided the cables terminated are of the same material. For larger cables, add-on neutral lugs may be ordered from the accessories on **Page V1-T1-66**.

Note: NEC allows only one current-carrying conductor per hole on neutrals unless otherwise noted.

Bottom Fed Loadcenters

For single-phase 225 A and below loadcenters that are bottom fed, a standard panel can be rotated 180 degrees to allow straight-in wiring of power cables to the main terminals. Because the main circuit breaker handle operates horizontally, the orientation of the main circuit breaker handle is consistent with the requirements of NEC 2008 Article 240.81.

Gutter Splicing

Loadcenters are not UL listed as wiring troughs. Therefore, gutter splicing of riser cables to tap off to the main device is not permitted. Refer to NEC 2008 Article 312.8.

Fire Rating

Due to the numerous openings in both loadcenter boxes and trims, they should not be mounted in firewalls. There is no approved method for sealing the enclosures for this application.

Date Code

The date of manufacture of each loadcenter is printed on the outside of the carton as well as inside the loadcenter. On the carton, the date code is printed on the end carton label. In the loadcenter, the date code is located on the small white label located on the right side wall (with the main device on top).

The date code is in the following format: F # # # &. The "F" is the numeric code for the Lincoln, IL plant, and the three numbers are the year and week of manufacturing, e.g., 023. The "!" sign at the end signifies the decade of the 2010. Therefore, the date code F023& would indicate that the product was manufactured in the 23rd week of 2010. The 1980s are represented by the "+" sign and the 1990s are represented by a "=" at the end of the code.

Surge Protectors

Complete home surge protection is available in multiple options, including a factory-installed option that provides the highest level of surge protection in a residential design. See Tab 3 for more details.

Circuit Breaker Case Interrupting Capacity

- 10 kAIC
- 22 kAIC
- 25 kAIC

Warranty Information

- 10-year limited loadcenter warranty
- 10-year limited branch breaker warranty

1

Type BR Loadcenter

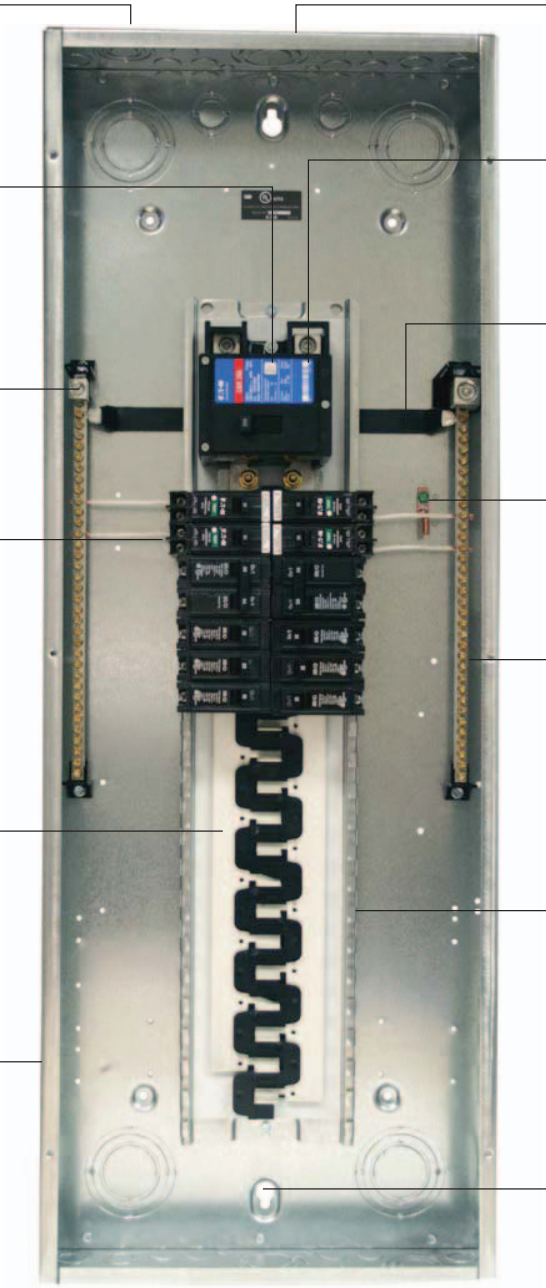

Extra 1.5 inch Knockout (38.1 mm)
- Larger knockout provides easier installation and time savings

Top or Bottom Feed
- Straight-in wiring saves labor and material
- One panel for either top or bottom applications

2/0 Lug
- Easily removable and can be installed in any location on the neutral bar

Type BR AFCI Breakers
- Compact design for easier wiring and improved wireway access
- Optional LED indicates one of six trip codes for circuit diagnostics
- Provides a clean gutter space

Standard Tin-Plated Aluminum Bus
- Excellent conductivity and corrosion resistance
- Copper bus options available for select catalog numbers

Drywall Marking on Enclosure
- Indicates proper mounting depth for flush applications

"Tangential" Center Knockout
- Easier installation for conduit applications

Commercial Grade Main Breaker
- 25 kAIC series rated main breaker for superior protection

Neutral Bus (Strap)
- Is easily removable for sub-panel applications

Bonding Z-Strap
- Provides easy field conversion for service entrance applications

Twin Neutral Bars
- Minimum 150% neutral capacity

Steel Backpan
- Provides solid and reliable breaker mounting—single piece design for stability and durability

Single Keyhole Mounting
- One keyhole at the top and bottom provides easier mounting and leveling

Warranty

10-year warranty on all Type BR loadcenters and circuit breakers.

Standards and Certifications

UL Listings

All Eaton Type BR loadcenters are listed under UL File E52977 except the 2–8 circuit loadcenters, up through and including 125 A, which are listed under UL File E8741.

Listed

Catalog Number Selection

Single- and Three-Phase Through 600 A

3 BR _ 30 42 B C 200 _ _

Phase
- **Blank** = Single-phase ①
- **3** = Three-phase

Eaton's Type BR Loadcenter

Factory Options
- **SUR** = Factory integrated surge

Number of 1-Inch (25.4 mm) Spaces

Maximum Number of Circuits

Main Device
- **B** = Main breaker
- **L** = Main lug
- **N** = Convertible main
- **H** = Main breaker high AIC

Bus
- **Blank** = Aluminum bus ①
- **C** = Copper bus

Amperes

50 = 50 A	**200** = 200 A
70 = 70 A	**225** = 225 A
100 = 100 A	**300** = 300 A
125 = 125 A	**400** = 400 A
150 = 150 A	**600** = 600 A

Enclosure
- **R** = NEMA Type 3R rainproof
- **S** = NEMA Type 1 indoor with surface trim
- **F** = NEMA Type 1 indoor with flush trim
- **Blank** = NEMA Type 1 indoor with combination trim ①
- **RIS** = Riser panel

Construction
- **Blank** = No feed thru lugs ①
- **F** = Feed-through lugs
- **G** = Ground bar
- **P** = Current design
- **NY** = NY City gutter space

Note

① No character space used.

1

Product Selection

Single-Phase—Main Circuit Breaker Loadcenters—10/25 kAIC

BR4040B200

Single-Phase Three-Wire—120/240 Vac—Insulated/Bondable Split Neutral

Main Breaker Type	Main Ampere Rating	Maximum Number 1-Inch (25.4 mm) Spaces	Maximum Number 1-Inch (25.4 mm) Circuits	Enclosure Type	Box Size	Wire Size Range Cu/Al 60 °C or 75 °C for Main Breaker	Loadcenter Catalog Number with Combination ① or NEMA Type 3R Cover
BR 10 kAIC	100	8	16	Indoor	B1	#4–1/0 ②	**BR816B100**
		10	20	Indoor	A1		**BR1020B100S11**
		10	20	Indoor	A1		**BR1020B100F11**
		10	20	Outdoor	B2R		**BR1020B100RF** ③④
		12	12	Indoor	B2		**BR1212B100**
		12	20	Indoor	B2		**BR1220B100**
		12	24	Outdoor	B2R		**BR1224B100R** ④
		16	16	Indoor	C1		**BR1616B100**
		16	20	Indoor	C1		**BR1620B100**
		16	24	Outdoor	C1R		**BR1624B100R** ④
		20	24	Outdoor	C3R		**BR2024B100R** ④
		20	20	Indoor	C2		**BR2020B100**
		16	24	Indoor	C1		**BR1624B100**
		30	30	Indoor	D1		**BR3030B100**
	125	16	24	Indoor	C1	#4–2/0	**BR1624B125**
		20	24	Indoor	C1		**BR2024B125**
		20	24	Outdoor	C3R		**BR2024B125R** ④
		30	30	Indoor	D1		**BR3030B125**
BRH ⑤ 22 kAIC	100	20	24	Indoor	C2	#4–1/0	**BR2024H100** ⑤
CSR ⑥ 25 kAIC	150	8	16	Outdoor	C3R	#2–300 kcmil	**BR816B150RF** ③④
		16	30	Indoor	C4		**BR1630B150**
		20	30	Indoor	C4		**BR2030B150**
		20	30	Outdoor	D1R		**BR2030B150R** ④
		20	40	Indoor	D1		**BR2040B150**
		20	40	Outdoor	D1R		**BR2040B150R** ④
		24	30	Indoor	G1		**BR2430B150**
		30	30	Outdoor	G1R		**BR3030B150R** ④
		30	30	Indoor	G1		**BR3030B150**
		30	40	Indoor	G1		**BR3040B150**
	200	4	8	Outdoor	8R	#2–300 kcmil	**BR48B200RF** ③⑦⑧
		8	16	Outdoor	C3R		**BR816B200RF** ③④
		16	32	Indoor	C4		**BR1632B200**
		20	40	Outdoor	D1R		**BR2040B200R** ④
		20	40	Indoor	D1		**BR2040B200**
		24	40	Indoor	G1		**BR2440B200**
		30	40	Outdoor	G1R		**BR3040B200R** ④
		30	40	Indoor	G1		**BR3040B200** ⑨
		40	40	Outdoor	L1R		**BR4040B200R** ④
		40	40	Indoor	L1		**BR4040B200**
		40	50	Indoor	L1		**BR4050B200**
		60	120	Indoor	L3		**BR60120B200**
		60	120	Outdoor	L3R		**BR60120B200R**
	225	42	42	Indoor	L2	#1–250 kcmil	**BR4242B225**
		42	42	Outdoor	L2R		**BR4242B225R** ④

Notes

① Combination style covers may be used in surface or flush applications.
② Wire range size for BR1020B100SP is #6–#1 Cu/Al.
③ Includes through-feed lugs for both phase and neutral conductors.
④ Rainproof panels are furnished with hub closure plates. For rainproof hubs, refer to **Page V1-T1-66**.
⑤ 22 kAIC series combination rating is obtained when Types BD, BR, BQ, BQC and GFCB 10 kAIC branch breakers are used in series with Type BRH main breaker.
⑥ 25 kAIC series combination rating is obtained when Types BD, BR, BQ, BQC and GFCB 10 kAIC branch circuit breakers are used in series with Type CSR main breaker.
⑦ Supplied with adapter plate to use DS Group1 hubs on **Page V1-T1-66**. If 2.50-inch (63.5 mm) hub is needed, remove adapter and use ARP00007CH25 hub.
⑧ Neutral is bonded—suitable for service entrance only—cannot be converted for sub-feed application.
⑨ Add G to the end of the catalog number for factory-installed GBK2120 ground bar.

All main circuit breaker loadcenters are listed for use as service entrance equipment and are shipped with neutral bonding strap preattached. The maximum rating of the panel is the main circuit breaker rating when used as service entrance equipment. Ground bar kits priced separately. See **Page V1-T1-66**.

Main Circuit Breaker Loadcenters—10/22 kAIC

B4242DFN

Single-Phase Three-Wire—120/240 Vac—Insulated/Bondable Split Neutral

Main Breaker Type	Main Ampere Rating	Maximum Number 1-Inch (25.4 mm) Spaces	Maximum Number 1-Inch (25.4 mm) Circuits	Enclosure Type	Box Size	Wire Size Range Cu/Al 60 °C or 75 °C for Main Breaker	Commercial Loadcenter Catalog Number ①②③ With Flush or NEMA Type 3R Cover	Commercial Loadcenter Catalog Number ①②③ With Surface Cover
DK ④	300	42	42	Indoor	24	(2) #3/0–250 kcmil	**BR4242B300F**	**BR4242B300S**
	400	42	42	Indoor	24	(2) #3/0–250 kcmil	**BR4242B400F**	**BR4242B400S**
		42	42	Outdoor	47	(2) #3/0–250 kcmil	**BR4242B400R** ⑤	—
HLD ⑥	600	42	42	Indoor	24	(2) #3/0–500 kcmil	—	**BR4242B600S**

Notes

① Ground bar kits priced separately. See **Page V1-T1-66**.
② The maximum rating of the panel is the main circuit breaker rating when used as service entrance equipment.
③ Door lock and key included with loadcenter.
④ Type DK main circuit breaker is rated 65 kAIC at 240 Vac and allows a 22 kAIC series rating on the panel when Types BR, BD and BJ branch circuit breakers are used.
⑤ Rainproof panels are furnished with hub closure plates. For rainproof hubs, refer to **Page V1-T1-66**.
⑥ Type HLD main circuit breaker is rated 65 kAIC at 240 Vac. Type HLD circuit breaker **is not** series rated with Types BR, BD and BJ branch circuit breakers.

Box sizes **Pages V1-T1-67** through **V1-T1-70**.

Please contact the Lincoln Flex Center for any configurations not listed.

1

Single-Phase—Main Lug Loadcenters

Surface **Outdoor**

Flush **Outdoor**

Surface (No Door)

Flush (No Door)

Outdoor

Single-Phase Three-Wire—120/240 Vac—Insulated/Bondable Split Neutral

Main Ampere Rating	Maximum Number 1-Inch (25.4 mm) Spaces	Circuits	Enclosure Type	Trim Type	Box Size	Wire Size Range Cu/Al 60 °C or 75 °C for Main Lugs	Loadcenter Catalog Number
70	2	4	Indoor	Surface (no door)	5	#8–#2	**BR24L70SP** ①②
	2	4	Indoor	Surface (no door)	5		**BR24L70SGP** ②③
	2	4	Outdoor	—	5R		**BR24L70RP** ①②④
	2	4	Indoor	Flush (no door)	5		**BR24L70FP** ①②
	2	4	Indoor	Flush (no door)	5		**BR24L70FGP** ②⑤
125	2	4	Indoor	Surface (no door)	6	#14–1/0	**BR24L125SP** ①②
	2	4	Outdoor	—	6R		**BR24L125RP** ①②④
	2	4	Outdoor	—	6R		**BR24L125RSEP** ②⑦⑧
	2	4	Outdoor	—	6R		**BR24L125RSE2P** ②⑥⑦
	2	4	Indoor	Flush (no door)	6		**BR24L125FP** ①②
	4	8	Indoor	Surface (no door)	7	#14–1/0	**BR48L125SP** ①⑨
	4	8	Indoor	Surface (no door)	7		**BR48L125SGP** ③⑨
	4	8	Outdoor	—	7R		**BR48L125RP** ①④⑨
	4	8	Indoor	Flush (no door)	7		**BR48L125FP** ①⑨
	4	8	Indoor	Flush (with door)	7		**BR48L125FDP** ①⑨
	4	8	Indoor	Flush (no door)	7		**BR48L125FGP** ③⑨
	6	12	Indoor	Surface (no door)	7	#14–#1	**BR612L125SP** ①⑩
	6	12	Indoor	Surface (no door)	7		**BR612L125SGP** ⑩⑪
	6	12	Indoor	Surface (with door)	7		**BR612L125SDP** ①⑩
	6	12	Indoor	Surface (with door)	7		**BR612L125SDGP** ⑩⑪
	6	12	Outdoor	—	7R		**BR612L125RP** ①④⑩
	6	12	Indoor	Flush (no door)	7		**BR612L125FP** ①⑩
	6	12	Indoor	Flush (no door)	7		**BR612L125FGP** ⑤⑩⑪
	6	12	Indoor	Flush (with door)	7		**BR612L125FDP** ⑩
	6	12	Indoor	Flush (with door)	7		**BR612L125FDGP** ⑤⑩⑪
	8	16	Indoor	Surface (no door)	7	#14–#1	**BR816L125SP** ①⑩
	8	16	Indoor	Surface (no door)	7		**BR816L125SGP** ⑩⑫
	8	16	Indoor	Surface (with door)	7		**BR816L125SDP** ①⑩
	8	16	Indoor	Surface (with door)	7		**BR816L125SDGP** ⑩⑫
	8	16	Outdoor	—	7R		**BR816L125RP** ①④⑩
	8	16	Indoor	Flush (no door)	7		**BR816L125FP** ①⑩
	8	16	Indoor	Flush (no door)	7		**BR816L125FGP** ⑤⑩⑫
	8	16	Indoor	Flush (with door)	7		**BR816L125FDP** ①⑩
	8	16	Indoor	Flush (with door)	7		**BR816L125FDGP** ⑤⑩⑫

Notes

① Ground bar kits priced separately. See **Page V1-T1-66**.
– For 2/4 circuit loadcenters, use GBK5 or GBK520 ground bar.
– For 4/8, 6/12 and 8/16 circuit loadcenters, use GBK10 ground bar.
– Ground bars mount to the left side wall of the enclosure for the 4/8, 6/12 and 8/16 circuit loadcenters.

② Suitable for use as service equipment when not more than two service disconnecting mains are provided or when not used as a lighting and appliance panelboard (see Article 408.34 of the NEC).

③ Ground bar GBK5 is installed.

④ Rainproof panels are furnished with hub closure plates. For rainproof hubs, refer to **Page V1-T1-66**.

⑤ CSA and UL approved.

⑥ Neutral/ground holes (6) #14–6 and (3) #14–2/0 AWG Cu/Al.

⑦ For use as service entrance applications only.

⑧ Neutral/ground holes (6) #14–6 and (3) #14–1/0 AWG Cu/Al.

⑨ Suitable for use as service equipment when not more than two service disconnecting mains are provided or when not more than six service disconnecting mains are provided and when not used as a lighting and appliance panelboard (see Article 408.34 of the NEC).

⑩ Suitable for use as service equipment when a main breaker is used or when not more than six service disconnecting mains are provided and when not used as a lighting and appliance panelboard (see Article 408.34 of the NEC).

⑪ Ground bar GBK10 is installed.

⑫ Ground bar GBK14 is installed.

Box sizes **Pages V1-T1-67** through **V1-T1-70**.

Single-Phase—Main Lug Loadcenters

Single-Phase Three-Wire—120/240 Vac—Insulated/Bondable Split Neutral, continued

	Main Ampere Rating	Maximum Number 1-Inch (25.4 mm) Spaces	Circuits	Enclosure Type	Box Size	Wire Size Range Cu/Al 60 °C or 75 °C for Main Lugs	Loadcenter Catalog Number with Combination or NEMA Type 3R Cover ①
BR1224L125	125	12	12	Indoor	B1	#6–2/0	**BR1212L125** ②③④⑤
		12	24	Indoor	B1		**BR1224L125** ②④⑤
		12	24	Indoor	B1		**BR1224L125G** ②④⑤
		12	24	Indoor	B1		**BR1224L125DG** ②④⑤⑥
		12	24	Outdoor	B1R		**BR1224L125R** ②⑤⑦
		16	16	Indoor	B2		**BR1616L125** ②④⑤
		16	24	Indoor	B2		**BR1624L125** ②④
		16	24	Indoor	B2		**BR1624L125G** ②④
		16	24	Outdoor	B2R		**BR1624L125R** ②⑦
		20	20	Indoor	C1		**BR2020L125** ②④⑤
		20	24	Indoor	C1		**BR2024L125** ②④
		20	24	Indoor	C1		**BR2024L125G** ②④⑧
		20	24	Outdoor	C1R		**BR2024L125R** ②⑦
		24	24	Indoor	C2		**BR2424L125** ②④
		24	24	Indoor	C2		**BR2424L125G** ②④⑧
		30	42	Indoor	D1		**BR3042L125** ②④
	150	16	30	Indoor	C2	#1–300 kcmil	**BR1630L150** ④⑨
		20	30	Indoor	C2		**BR2030L150** ④⑨
BR1224L200	200	8	16	Outdoor	B2R	#1–300 kcmil	**BR816L200RF** ⑤⑦⑩
		12	24	Indoor	B2		**BR1224L200** ④⑤⑨
		12	24	Outdoor	B2R		**BR1224L200R** ⑤⑦⑨
		20	40	Indoor	C2		**BR2040L200** ④⑨
		20	40	Indoor	C2		**BR2040L200G** ④⑧⑨
		20	40	Outdoor	C3R		**BR2040L200R** ⑦⑨
		24	40	Indoor	C4		**BR2440L200** ④⑨
		30	40	Indoor	D1		**BR3040L200** ④⑨
		30	40	Indoor	D1		**BR3040L200G** ④⑧⑨
		30	40	Outdoor	D1R		**BR3040L200R** ⑦⑨
		40	40	Indoor	G1		**BR4040L200** ④⑨
		40	40	Indoor	G1		**BR4040L200G** ④⑨
		40	40	Outdoor	G1R		**BR4040L200R** ⑦⑨
		60	120	Indoor	L3		**BR60120L200** ⑪
	225	42	42	Indoor	L1	#1–300 kcmil	**BR4242L225** ④
		42	42	Outdoor	L1R		**BR4242L225R** ⑦

Notes

① Ground bar kits priced separately unless otherwise noted. See **Page V1-T1-66**.
② Has notch for BREQS125 hold-down kit.
③ Single, movable neutral is provided.
④ Combination cover style.
⑤ Suitable for use as service equipment when not more than six main disconnecting means are provided and when not used as a lighting and appliance panelboard (see Article 408.34 of the NEC).
⑥ Ground bars GBK5 and GBK520 installed.
⑦ Rainproof panels are furnished with hub closure plates. For rainproof hubs, refer to **Page V1-T1-66**.
⑧ Ground bar GBK1220 installed.
⑨ Has notch for BRHDK125 hold-down kit.
⑩ Includes through-feed lugs for both phase and neutral conductors.
⑪ Includes main lugs. Loadcenters can convert to main breaker using kit.

1

Single-Phase—Main Lug Loadcenters—400 and 600 A

4242DFN

Single-Phase Three-Wire—120/240 Vac—Insulated/Bondable Split Neutral

Main Ampere Rating	Maximum Number 1-Inch (25.4 mm) Spaces	Circuits	Enclosure Type	Box Size	Wire Size Range Cu/Al 60 °C or 75 °C for Main Lugs	Commercial Loadcenter Catalog Number ①②③ With Flush or NEMA Type 3R Cover	With Surface Cover
400	12	24	Outdoor	42	(2) #3/0–400 kcmil	**BR1224L400R** ④⑤	—
	42	42	Indoor	22		**BR4242L400F**	**BR4242L400S**
	42	42	Outdoor	46		**BR4242L400R** ④	—
600	42	42	Indoor	22	(2) #2–500 kcmil	—	**BR4242L600S**

Notes

① Ground bar kits priced separately unless otherwise noted. See **Page V1-T1-66**.

② Has notch for BRHDK125 hold-down kit.

③ Ground bar GBK8 installed.

④ Rainproof panels are furnished with hub closure plates. For rainproof hubs, refer to **Page V1-T1-66**.

⑤ Suitable for use as service equipment when not more than six main disconnecting means are provided and when not used as a lighting and appliance panelboard (see Article 408.34 of the NEC).

Convertible Loadcenters MCB or MLO—Base Units and Main Devices 10/22/25 kAIC, Complete Assembly Consists of: Loadcenter and Either Main Breaker Kit or Main Lug Kit

Note: Interrupting rating depends on main circuit breaker selected.

BR3040N200

Base Units—Single-Phase Three-Wire—120/240 Vac—Insulated/Bondable Split Neutral (Unless Otherwise Noted)

Main Ampere Rating ①	Maximum Number 1-Inch (25.4 mm) Spaces	Circuits	Enclosure Type	Box Size	Wire Size Range Cu/Al 60 °C or 75 °C for Main	Loadcenter Catalog Number With Combination or NEMA Type 3R Cover ②③
125 ④	12	24	Indoor	B2	See main breaker and main lug kit tables **Page V1-T1-54**.	**BR1224N125** ⑤⑥
	12	24	Outdoor	B2R		**BR1224N125R** ⑤⑥⑦
	16	24	Indoor	C1		**BR1624N125** ⑤
	16	24	Outdoor	C1R		**BR1624N125R** ⑤⑦
	20	24	Indoor	C2		**BR2024N125** ⑤
	20	24	Outdoor	C3R		**BR2024N125R** ⑤⑦
200 ⑧	8	16	Outdoor	C3R		**BR816N200RF** ⑦⑨⑩⑪
	12	24	Indoor	C4		**BR1224N200** ⑩
	12	24	Outdoor	C3R		**BR1224N200R** ⑦⑩
	16	32	Indoor	C4		**BR1632N200** ⑩
	20	40	Indoor	D1		**BR2040N200** ⑩
	20	40	Indoor	D1		**BR2040N200G** ⑫
	20	40	Outdoor	D1R		**BR2040N200R** ⑦⑩
	20	40	Outdoor	D1R		**BR2040N200RG** ⑫
	24	40	Indoor	G1		**BR2440N200** ⑦⑩
	30	40	Indoor	G1		**BR3040N200** ⑩
	30	40	Indoor	G1		**BR3040N200G** ⑫
	30	40	Outdoor	G1R		**BR3040N200R** ⑦⑩
	30	40	Outdoor	G1R		**BR3040N200RG** ⑫
	40	40	Indoor	L1		**BR4040N200** ⑩
	40	40	Indoor	L1		**BR4040N200G** ⑫
	40	40	Outdoor	L1R		**BR4040N200R** ⑦⑩
	40	40	Outdoor	L1R		**BR4040N200RG** ⑫
	40	50	Indoor	L1		**BR4050N200**
	40	50	Outdoor	L1R		**BR4050N200R**

Notes

① The maximum rating of the loadcenter is the main circuit breaker rating when used as service entrance equipment.
② 100, 125 and 200 A convertible base unit catalog numbers include interior, box and cover only. Main devices and accessories must be ordered separately for field installation. All convertible base units are listed as suitable for use as service entrance equipment when used per Article 384 of the NEC.
③ Ground bar kits priced separately except as noted, refer to **Page V1-T1-66**.
④ For main breaker, use Type BR. For main lug use Type BRSF.
⑤ BREQS125 hold-down screw comes with loadcenter for back-fed Types BR and BRH main circuit breakers.
⑥ Convertible to maximum of 100 A main circuit breaker and 125 A main lug.
⑦ Rainproof loadcenters are furnished with hub closure plates. For rainproof hubs, refer to **Page V1-T1-66**.
⑧ For main breaker, use Type BW or CSR. For main lug, use Type BRL.
⑨ Includes through-feed lugs for both phase and neutral conductors.
⑩ No hold-down provisions for back-fed Types BR and BRH main circuit breakers.
⑪ Insulated/bondable single neutral.
⑫ Includes GBK2120 ground bar.

Convertible Loadcenters MCB or MLO—Base Units and Main Devices 10/22/25 kAIC, Complete Assembly Consists of: Loadcenter and Either Main Breaker Kit or Main Lug Kit

Note: Interrupting rating depends on main circuit breaker selected.

BW2200

Main Devices—Two- and Three-Pole Main Circuit Breakers—120/240 Vac or 208Y/120 Vac or 240 Vac

Ampere Rating	Wire Size Range Cu/Al 60 °C or 75 °C for Main Breaker	10 kAIC Catalog Number	22/25 kAIC Catalog Number ①
Two-Pole			
100	#4–1/0	**BR2100**	**BRH2100**
110	#4–1/0	**BR2110**	**BRH2110**
125	#4–2/0	**BR2125**	**BRH2125**
125	#2–300 kcmil	**BW2125**	**CSR2125N**
150	#2–300 kcmil	**BW2150**	**CSR2150N**
175	#2–300 kcmil	**BW2175**	**CSR2175N**
200	#2–300 kcmil	**BW2200**	**CSR2200N**
Three-Pole			
100	#1	**BR3100**	**BRH3100**

BRL200

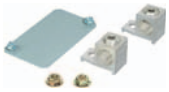

Main Devices—Two- and Three-Pole Main Lug Kits—120/240 Vac or 208Y/120 Vac or 240 Vac

Ampere Rating	Wire Size Range Cu/Al 60 °C or 75 °C for Main Lugs	Catalog Number
Two-Pole		
125	#6–2/0	**BRSF125**
150	#1–300 kcmil	**BRL200**
175	#1–300 kcmil	**BRL200**
200	#1–300 kcmil	**BRL200**
Three-Pole		
150	#6–3/0	**3BRSF150**

Main Circuit Breaker with Accessory

Example: BW22005R01 (Put description with catalog number on order. See **Page V1-T1-87**.)

Main Circuit Breaker Loadcenters—Copper Bus 10/22/25 kAIC

BR3030BC100

Main Circuit Breaker Loadcenters—With Copper Bus—Single-Phase Three-Wire—120/240 Vac—Insulated/Bondable Split Neutral

Main Breaker Type	Main Ampere Rating	Maximum Number 1-Inch (25.4 mm) Spaces	Maximum Number 1-Inch (25.4 mm) Circuits	Enclosure Type	Box Size	Wire Size Range Cu/Al 60 °C or 75 °C for Main Breaker	Loadcenter Catalog Number with Combination Cover ②③
BR 10 kAIC	100	20	20	Indoor	C2	#4–1/0	**BR2020BC100**
		30	30	Indoor	D1	#4–1/0	**BR3030BC100**
BRH 22 kAIC ④	100	30	30	Indoor	D1	#4–1/0	**BR3030HC100**
CSR 25 kAIC	150	30	30	Indoor	G1	#2–300 kcmil	**BR3030BC150**
	200	20	40	Indoor	D1	#2–300 kcmil	**BR2040BC200**
		30	40	Indoor	G1	#2–300 kcmil	**BR3040BC200**
		40	40	Indoor	L1	#2–300 kcmil	**BR4040BC200**

Main Lug Only Loadcenters—Copper Bus

BR816LC125FDP

Single-Phase Three-Wire—120/240 Vac—Insulated/Bondable Single Neutral with Copper Bus

Main Ampere Rating	Maximum Number 1-Inch (25.4 mm) Spaces	Maximum Number 1-Inch (25.4 mm) Circuits	Enclosure Type	Trim Type	Box Size	Wire Size Range Cu/Al 60 °C or 75 °C for Main Lugs	Loadcenter Catalog Number
125	8	16	Indoor	Surface (with door)	7	#14–1	**BR816LC125SDP**
	8	16	Indoor	Flush (with door)	7		**BR816LC125FDP**

Notes

① Series combination rating with Types BD, BR, BQ, BQC and GFCB is 22 kAIC with BRH main and 25 kAIC with CSR main.

② All main circuit breaker loadcenters are listed for use as service entrance equipment and are shipped with neutral bonding strap preattached. The maximum rating of the panel is the main circuit breaker rating when used as service entrance equipment.

③ Ground bar kits priced separately. See **Page V1-T1-66**.

④ 22 kAIC series combination rating is obtained when Types BD, BR, BQ, BQC and GFCB 10 kAIC branch breakers are used in series with Type BRH main breaker.

Box sizes **Pages V1-T1-67** through **V1-T1-70**.

Convertible Loadcenters—Copper Bus 10/22/25 kAIC

BR3040NC200

Convertible—Single-Phase, Three-Wire—120/240 Vac—Insulated/Bondable Split Neutral

Main Ampere Rating	Maximum Number 1-Inch (25.4 mm) Spaces	Circuits	Enclosure Type	Box Size	Wire Size Range Cu/Al 60 °C or 75 °C for Main	Loadcenter Catalog Number (With Combination or NEMA Type 3R Cover) ①②③
125 10/22 kAIC ④⑤	12	24	Indoor	B2	See main breaker and main lug kit tables on **Page V1-T1-54**.	**BR1224NC125** ⑥⑦
	12	24	Outdoor	B2R		**BR1224NC125R** ⑥⑦⑧
	20	24	Indoor	C2		**BR2024NC125** ⑦
	20	24	Outdoor	C3R		**BR2024NC125R** ⑦⑧
200 10/25 kAIC ④⑨	20	40	Indoor	D1		**BR2040NC200**
	20	40	Outdoor	D1R		**BR2040NC200R** ⑧
	30	40	Indoor	G1		**BR3040NC200**
	30	40	Outdoor	G1R		**BR3040NC200R** ⑧
	40	40	Indoor	L1		**BR4040NC200**
	40	40	Outdoor	L1R		**BR4040NC200R** ⑧

Notes

① 100, 125 and 200 A convertible base unit catalog numbers include interior, box and cover only. Main devices and accessories must be ordered separately for field installation. All convertible base units are listed as suitable for use as service entrance equipment when used per Article 384 of the NEC.

② Ground bar kits priced separately, refer to **Page V1-T1-66**.

③ All main circuit breaker loadcenters are listed for use as service entrance equipment and are shipped with a neutral bonding strap preattached. The maximum main rating of the loadcenter is the main breaker rating when used as service entrance equipment.

④ Interrupting rating depends on main circuit breaker selected. See **Page V1-T1-66** for mains.

⑤ For main breaker, use Type BW or CSR. For main lug, use Type BRL.

⑥ Rainproof loadcenters are furnished with hub closure plates. For rainproof hubs, refer to **Page V1-T1-66**.

⑦ Hold-down screw BREQS125 comes with loadcenter for back-fed Types BR and BRH main circuit breakers.

⑧ For main breaker, use Type BR. For main lug, use Type BRSF.

⑨ Suitable for use as service equipment when not more than six main disconnecting means are provided and when not used as a lighting and appliance panelboard. (see Article 408.34 of the NEC).

Three-Phase—Type BR Main Circuit Breaker Loadcenters

Three-Phase, Four-Wire—Main Lug Loadcenters—Copper Bus—208Y/120 Vac or 240 Vac, Insulated/Bondable Split Neutral

Main Ampere Rating	Maximum Number 1-Inch (25.4 mm) Spaces	Circuits	Enclosure Type	Box Size	Wire Size Range Cu/Al 60 °C or 75 °C for Main	Loadcenter Catalog Number (With Combination or NEMA Type 3R Cover)
125	12	24	Indoor	C1	#6–3/0	**3BR1224LC125**
125	12	24	Outdoor	C1R	#6–3/0	**3BR1224LC125R**
150	24	42	Indoor	D1	#4–300 kcmil	**3BR2442LC150**
150	24	42	Outdoor	D1R	#4–300 kcmil	**3BR2442LC150R**
200	12	24	Indoor	C4	#4–300 kcmil	**3BR1224LC200**
200	12	24	Outdoor	C3R	#4–300 kcmil	**3BR1224LC200R**
200	30	42	Indoor	G1	#4–300 kcmil	**3BR3042LC200**
200	30	42	Outdoor	G1R	#4–300 kcmil	**3BR3042LC200R**
200	42	42	Indoor	L1	#4–300 kcmil	**3BR4242LC200**
200	42	42	Outdoor	L1R	#4–300 kcmil	**3BR4242LC200R**
225	30	42	Indoor	L1	#4–300 kcmil	**3BR3042LC225**
225	30	42	Outdoor	L1R	#4–300 kcmil	**3BR3042LC225R**
400	42	42	Indoor	24	(2) 3/0–250 kcmil	**3BR4242LC400S**
	42	42	Outdoor	47		**3BR4242BC400R**
600	42	42	Indoor	24	(2) 3/0–500 kcmil	**3BR4242LC600S**

Three-Phase, Four-Wire—Main Circuit Breaker Loadcenters—Copper Bus—208Y/120 Vac or 240 Vac, Insulated/Bondable Split Neutral

Main Breaker Type	Main Ampere Rating	Maximum Number 1-Inch (25.4 mm) Spaces	Circuits	Enclosure Type	Box Size	Wire Size Range Cu/Al 60 °C or 75 °C for Main Breaker	Loadcenter Catalog Number (With Combination or NEMA Type 3R Cover)
BR 10 kAIC	100	12	24	Indoor	C1	#14–1/0	**3BR1224BC100**
	100	12	24	Outdoor	C1R	#14–1/0	**3BR1224BC100R**
CC 10 kAIC	150	30	42	Indoor	L1	#6–4/0	**3BR3042BC150**
	150	30	42	Outdoor	L1R	#6–4/0	**3BR3042BC150R**
	200	42	42	Indoor	L2	2/0–300 kcmil	**3BR4242BC200**
	200	42	42	Outdoor	L2R	2/0–300 kcmil	**3BR4242BC200R**
	225	42	42	Indoor	L2	2/0–300 kcmil	**3BR4242BC225**
	225	42	42	Outdoor	L2R	2/0–300 kcmil	**3BR4242BC225R**
DK 22 kAIC	400	42	42	Indoor	24	(2) 3/0–250 kcmil	**3BR4242BC400S**
		42	42	Outdoor	47		**3BR4242BC400R**
HLD 10 kAIC	600	42	42	Indoor	24	(2) 3/0–500 kcmil	**3BR4242BC600S**

3BR4242B200

Three-Phase, Four-Wire—Main Circuit Breaker Loadcenters—Aluminum Bus—208Y/120 Vac or 240 Vac Insulated/Bondable Split Neutral

Main Breaker Type	Main Ampere Rating	Maximum Number 1-Inch (25.4 mm) Spaces	Circuits	Enclosure Type	Box Size	Wire Size Range Cu/Al 60 °C or 75 °C for Main Breaker	Loadcenter Catalog Number ①② (With Combination or NEMA Type 3R Cover)
BR 10 kAIC	100	12	24	Indoor	C1	#14–1/0	**3BR1224B100**
		12	24	Outdoor	C1R		**3BR1224B100R** ③
CC 10 kAIC	125	30	42	Indoor	L1	#6–4/0	**3BR3042B125**
	150	30	42	Indoor	L1	#6–4/0	**3BR3042B150**
		30	42	Outdoor	L1R		**3BR3042B150R** ③
	200	30	42	Indoor	L1	#1–250 kcmil	**3BR3042B200**
		30	42	Outdoor	L1R		**3BR3042B200R** ③
		42	42	Indoor	L2		**3BR4242B200**
		42	42	Outdoor	L2R		**3BR4242B200R** ③
CHH 100 kAIC	200	42	42	Indoor	L2	2/0–300 kcmil	**3BR4242H200** ⑥
CC 10 kAIC	225	42	42	Indoor	L2	2/0–300 kcmil	**3BR4242B225**
		42	42	Outdoor	L2R		**3BR4242B225R** ③
DK ④ 22 kAIC	400	42	42	Indoor	24	(2) #3/0–250 kcmil	**3BR4242B400S** ⑦
		42	42	Indoor	24		**3BR4242B400F**
		42	42	Outdoor	47		**3BR4242B400R** ③
LD ⑤	600	42	42	Indoor	24	(2) #3/0–500 kcmil	**3BR4242B600F**

Notes

① All main circuit breaker loadcenters are listed for use as service entrance equipment and are shipped with a neutral bonding strap pre-attached (commercial loadcenters do not have a pre-attached bonding strip). The maximum main rating of the panel is the main circuit breaker rating when used as service entrance equipment.

② Ground bar kits priced separately. See **Page V1-T1-66**.

③ Rainproof loadcenters are furnished with hub closure plates. For rainproof hubs, refer to **Page V1-T1-66**.

④ Type DK main circuit breaker is rated 65 kAIC at 240 Vac and allows a 22 kAIC series rating on the loadcenter when Types BR, BD and BJ branch circuit breakers are used.

⑤ The LD main circuit breaker is rated 65 kAIC at 240 Vac. Type LD circuit breaker **is not** series rated with Types BR, BD and BJ branch circuit breakers.

⑥ Includes CHH 100 kAIC rated MCB. 100 kAIC series rating combination is obtained when types BD, BR, BQ, BQC and GFGB branch breakers are used with CHH main.

⑦ With surface cover.

3BR1224L125

Three-Phase, Four-Wire—Main Lug Loadcenters—Aluminum Bus—208Y/120 Vac or 240 Vac, Insulated/Bondable (Unless Otherwise Noted)

Main Ampere Rating	Maximum Number 1-Inch (25.4 mm) Spaces	Circuits	Enclosure Type	Box Size	Wire Size Range Cu/Al 60 °C or 75 °C for Main Lugs	Loadcenter Catalog Number ① (With Combination or NEMA Type 3R Cover)
100	3	3	Indoor	9	#6–1/0	**3BR3L100S** ②③
	3	3	Outdoor	9R		**3BR3L100R** ③④
125	12	24	Indoor	C1	#6–3/0	**3BR1224L125** ⑤⑥
	12	24	Outdoor	C1R		**3BR1224L125R** ④⑤⑥
150	18	36	Indoor	C2	#6–4/0	**3BR1836L150**
	18	36	Outdoor	C3R		**3BR1836L150R**
	24	42	Indoor	D1	#4–300 kcmil	**3BR2442L150**
	24	42	Outdoor	D1R		**3BR2442L150R** ④
200	12	24	Indoor	C4	#4–300 kcmil	**3BR1224L200** ⑥
	12	24	Outdoor	C3R		**3BR1224L200R** ④⑥
	18	36	Indoor	C4	#4–300 kcmil	**3BR1836L200**
	18	36	Outdoor	C3R		**3BR1836L200R**
	30	42	Indoor	G1	#4–300 kcmil	**3BR3042L200**
	30	42	Outdoor	G1R		**3BR3042L200R** ④
	42	42	Indoor	L1	#4–300 kcmil	**3BR4242L200**
	42	42	Outdoor	L1R		**3BR4242L200R** ④
225	42	42	Indoor	L1	#4–300 kcmil	**3BR4242L225**
	42	42	Outdoor	L1R		**3BR4242L225R** ④

3BR4242L400F

Three-Phase, Four-Wire—Main Lug Loadcenters—Aluminum Bus—208Y/120 Vac or 240 Vac, Insulated/Bondable Split Neutral

Main Ampere Rating	Maximum Number 1-Inch (25.4 mm) Spaces	Circuits	Enclosure Type	Box Size	Wire Size Range Cu/Al 60 °C or 75 °C for Main Lugs	Commercial Loadcenter Catalog Number ⑦ With Flush or NEMA Type 3R Cover	With Surface Cover
400	42	42	Indoor	22	(1) 250–750 kcmil or (2) #3/0–250 kcmil	**3BR4242L400F**	**3BR4242L400S**
	42	42	Outdoor	46		**3BR4242L400R** ④	—
600	42	42	Indoor	22	(2) #2–500 kcmil	—	**3BR4242L600S**

Notes

① Ground bar kits priced separately. See **Page V1-T1-66**.
② Surface cover only.
③ Insulated/bondable single neutral.
④ Rainproof loadcenters are furnished with hub closure plates. For rainproof hubs, refer to **Page V1-T1-66**.
⑤ Has notch for BREQS125 hold-down kit.
⑥ Suitable for use as service equipment when not more than six main disconnecting means are provided and when not used as a lighting and appliance panelboard (see Article 408.34 of the NEC).
⑦ Door lock and key included with loadcenter.

Box sizes **Pages V1-T1-67** through **V1-T1-70**.

3BR3030N100

3BR4242N225NY

Three-Phase, Four-Wire—Convertible Loadcenters—Aluminum Bus—208Y/120 Vac or 240 Vac, Insulated/Bondable Split Neutral

Main Ampere Rating ①	Maximum Number 1-Inch (25.4 mm) Spaces	Circuits	Enclosure Type	Box Size	Wire Size Range Cu/Al 60 °C or 75 °C for Main	Loadcenter Catalog Number ②③ (With Combination or NEMA Type 3R Cover)
100 ④	30	30	Indoor	D1	See main breaker and main lug kit tables below.	**3BR3030N100** ⑤
	30	30	Outdoor	D1R		**3BR3030N100R** ⑤⑥
125 ④	12	24	Indoor	C1		**3BR1224N125** ⑤⑥⑦
	12	24	Outdoor	C1R		**3BR1224N125R** ⑤⑥⑦⑧
200	30	42	Indoor	L1		**3BR3042N200**
225	42	42	Indoor	L2		**3BR4242N225**
	42	42	Indoor	B		**3BR4242B225NY** ⑨

Three-Phase Main Breaker Kits—10 kAIC

Ampere Rating	Wire Size Range Cu/Al 60 °C or 75 °C	Catalog Number
100	#6–4/0	**CC3100N**
125	#6–4/0	**CC3125N**
150	#6–4/0	**CC3150N**
175	#2/0–300 kcmil	**CC3175N**
200	#2/0–300 kcmil	**CC3200N**
225	#2/0–300 kcmil	**CC3225N**

Three-Phase Main Lugs Kit for Convertible Loadcenters

Ampere Rating	Wire Size Range Cu/Al 60 °C or 75 °C	Catalog Number
225	#1–300 kcmil	**3BRL225**
225	#1–300 kcmil	**3BRS225** ⑩

Notes

① The maximum rating of the loadcenter is the main circuit breaker rating when used as service entrance equipment.

② 100, 125 and 200 A convertible base unit catalog numbers include interior, box and cover only. Main devices and accessories must be ordered separately for field installation.
All convertible base units are listed as suitable for use as service entrance equipment when used per Article 384 of the NEC.

③ Ground bar kits priced separately. See **Page V1-T1-66**.

④ For main breaker, use Type BR. For main lug, use Type BRSF.

⑤ BREQS125 hold-down screw comes with loadcenter for back-fed Types BR and BRH main circuit breakers.

⑥ Rainproof loadcenters are furnished with hub closure plates. For rainproof hubs, refer to **Page V1-T1-66**.

⑦ Convertible to maximum of 100 A main circuit breaker and 125 A main lug.

⑧ Suitable for use as service equipment when not more than six main disconnecting means are provided and when not used as a lighting and appliance panelboard
(see Article 408.34 of the NEC).

⑨ Order 3BR42FTNY or 3BR42STNY cover separately.

⑩ For subfeed.

Box sizes **Pages V1-T1-67** through **V1-T1-70**.

BR Quick Connect Neutral Loadcenters

Contents—BR Specialty Products

Description	*Page*
Overview	V1-T1-42
BR Specialty Products	
BR Quick Connect Neutral Loadcenters	
Spa Panels	V1-T1-58
Riser Panel	V1-T1-59
Type BR Renovation Loadcenter	V1-T1-60
Type BR Mechanical Interlock Kits	V1-T1-62
Type BR Retrofit Interior Kits	V1-T1-73
BR Circuit Breakers	V1-T1-76

BR Specialty Products

BR Quick Connect Neutral Loadcenters

Product Description

The Type BR Quick Connect Neutral loadcenters coupled with Type BR Quick Connect Neutral electronic breakers provide a clean, quick connection for an installer looking to save time while providing a professional look.

Features and Benefits

- Full-length neutral bars provide over 300% neutral capacity while enhancing installation flexibility for the installer
- Backed-out neutral screws allow an installer to make a quick connection when terminating neutral and ground wires
- Extended circuits (30/60, 40/80) provide maximum flexibility to a contractor on every space possible
- Standard LED diagnostics on AFCI and AF/GF breakers provides installers best-in-class troubleshooting technology
- Cut-to-length neutral wires provides a clean, professional look versus traditional pigtail circuit breakers
- Solid-tip, stranded neutral wires provide a quick connection to the full length neutral bar

Product Selection

BR Quick Connect Neutral Loadcenters ①

Main Device	Ampere Rating	Spaces	Circuits ②	Incoming Lug Size	Enclosure Type ③	Box Size	Ground Bar	Number of Neutral Terminations	Catalog Number
BR 10 kAIC	100	30	60	#4–1/0	Indoor	D1	④	96	**BR3060BQN100**
CSR 25 kAIC	150	30	60	#2–300 kcmil	Indoor	G1	④	102	**BR3060BQN150**
CSR 25 kAIC	200	30	60	#2–300 kcmil	Indoor	G1	④	102	**BR3060BQN200**
CSR 25 kAIC	200	40	80	#2–300 kcmil	Indoor	L1	④	128	**BR4080BQN200**
CSR 25 kAIC	200	30	60	#2–300 kcmil	Outdoor	L1R	④	94	**BR3060BQN200R**
CSR 25 kAIC	200	40	80	#2–300 kcmil	Outdoor	G1R	④	128	**BR4080BQN200R**
Main lug only	125	24	48	#6–2/0	Indoor	C2	GBK14	80	**BR2448LQN125G**
Main lug only	125	30	60	#6–2/0	Indoor	D1	GBK10	96	**BR3060LQN125G**
Main lug only	200	30	60	#1–300 kcmil	Indoor	D1	GBK1020 + GBK10	96	**BR3060LQN200G**
Main lug only	200	40	80	#1–300 kcmil	Indoor	G1	GBK1020 + GBK10	122	**BR4080LQN200G**
Main lug only	125	20	40	#6–2/0	Outdoor	C1R	GBK14	68	**BR2040LQN125RG**
Main lug only	200	30	60	#1–300 kcmil	Outdoor	D1R	GBK1420	94	**BR3060LQN200RG**
Convertible	200	30	60	—	Indoor	G1	④	102	**BR3060NQN200**
Convertible	200	40	80	—	Indoor	L1	④	128	**BR4080NQN200**
Convertible	200	30	60	—	Outdoor	G1R	④	94	**BR3060NQN200R**
Convertible	200	40	80	—	Outdoor	L1R	④	128	**BR4080NQN200R**

BR Quick Connect Neutral Electronic Breakers

Ampere Rating	Poles	Wire Size	Breaker Type	LED Diagnostics Included	Catalog Number
15	Single-pole 10 kAIC	#14–4	Combination AFCI	Yes	**BRCAF115QN**
20	Single-pole 10 kAIC	#14–4	Combination AFCI	Yes	**BRCAF120QN**
15	Single-pole 10 kAIC	#14–4	Arc fault/ground fault	Yes	**BRLAFGF115QN**
20	Single-pole 10 kAIC	#14–4	Arc fault/ground fault	Yes	**BRLAFGF120QN**

Notes

① BR Quick Connect Neutral loadcenters accept both standard and Quick Connect Neutral breakers.
② Loadcenters accept Type BR twin breakers.
③ Combination cover included with every indoor loadcenter.
④ Ground bar kit not included. Purchase separately.

Spa Panels

Contents—BR Specialty Products

Description	*Page*
Overview	**V1-T1-42**
BR Specialty Products	
BR Quick Connect Neutral Loadcenters	**V1-T1-57**
Spa Panels	
Riser Panel	**V1-T1-59**
Type BR Renovation Loadcenter	**V1-T1-60**
Type BR Mechanical Interlock Kits	**V1-T1-62**
Type BR Retrofit Interior Kits	**V1-T1-73**
BR Circuit Breakers	**V1-T1-76**

Spa Panels

Product Description

Eaton's BR Spa Panels distribute power to outdoor loads and provide protection for people from electric shock. Save time and money with streamlined installation procedures and easy-access features. Spa panels meet NEC requirements by providing a ground fault circuit interruption device and a disconnect switch in a single simple device. Ships assembled prewired, factory tested and ready to install.

Features

- 10-year warranty
- UL Listed
- Factory-installed two-pole ground fault circuit interrupter (GFCI)

Product Selection

BR Spa Panel

Spa Panel—Meets NEC Article 680.40 Through 680.43—Requirements for GFCI Protection

Main Ampere Rating	Maximum Number 1-Inch (25.4 mm) Space	Poles	Enclosure Type	Box Size	Wire Size Range Cu/Al 60 °C or 75 °C for Main Lugs	Catalog Number
40	—	—	Outdoor	5R	#8–#2	**BR40SPA** ①
50	—	—	Outdoor	5R	#8–#2	**BR50SPA** ②

Notes

① Includes a GFCB240 breaker, factory installed.

② Includes a GFCB250 breaker, factory installed.

Riser Panel

Contents—BR Specialty Products

Description	*Page*
Overview	V1-T1-42
BR Specialty Products	
BR Quick Connect Neutral Loadcenters	V1-T1-57
Spa Panels	V1-T1-58
Riser Panel	
Type BR Renovation Loadcenter	V1-T1-60
Type BR Retrofit Interior Kits	V1-T1-73
BR Circuit Breakers	V1-T1-76

Riser Panel

Product Description

Eaton's Riser Panel is a loadcenter with an offset interior to allow riser cables to pass through the enlarged gutter. By using lay-in tap lugs, the contractor is able to simply strip off a length of the riser cable's insulation, and tap off to the riser panel's main lugs. These panels are used in the construction of assisted living homes, dormitories, public housing complexes and apartments.

Product Selection

BR1224L125RIS

Riser Panel

Main Ampere Rating	Maximum Number 1-Inch (25.4 mm) Space	Circuits	Enclosure Type	Box Size	Wire Size Range Cu/Al 60 °C or 75 °C for Main Lugs	Catalog Number
125	12	24	Indoor	C4	#6–2/0	**BR1224L125RIS**
125	12	24	Indoor	C4	#6–2/0	**BR1224L125RISBP** ①
125	20	24	Indoor	C4	#6–2/0	**BR2024L125RIS**
125	20	24	Indoor	C4	#6–2/0	**BR2024L125RISBP** ①
125	20	30	Indoor	C2	#6–2/0	**BR2030L125RIS**
200	30	40	Indoor	D1	#1–300	**BR3040L200RIS**

BRGUTTER (Shown with Loadcenter)

Riser Panel Accessories

Catalog Number
BRGUTTER ②
GTAP250

Notes

① Bulk-packaged loadcenter without carton. Must be ordered in multiples of 16.

② Refer to **Page V1-T1-68** for dimensions. BRGUTTER is box size C2.

Accessories

For riser panels not shown, contact the Flex Center at 1-800-330-6479 for both CH and BR riser panels.

BR Renovation Loadcenters

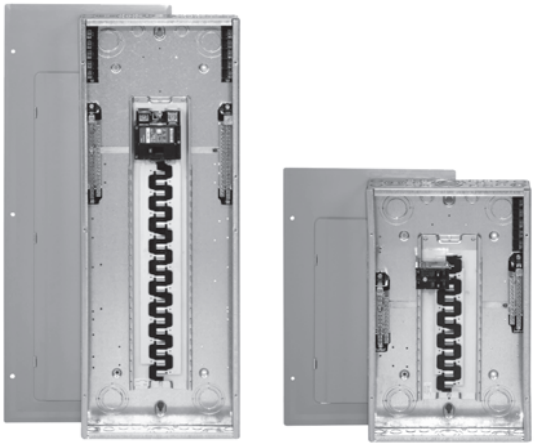

Contents—BR Specialty Products

Description	*Page*
Overview	**V1-T1-42**
BR Specialty Products	
BR Quick Connect Neutral Loadcenters	**V1-T1-57**
Spa Panels	**V1-T1-58**
Riser Panel	**V1-T1-59**
Type BR Renovation Loadcenter Options and Accessories	**V1-T1-61**
Type BR Retrofit Interior Kits	**V1-T1-73**
BR Circuit Breakers	**V1-T1-76**

Type BR Renovation Loadcenter

Product Description

- Available in 10, 20, 30 and 40 circuit main breaker styles
- Designed to replace existing loadcenters and fuse boxes
- Type BR loadcenter packaged with circuit breakers
- Factory-installed 5-circuit terminal block(s)
- Twin-stacked neutral design

Quick-Pro℠

All you need to know to save time and make more money. Specified on certain Eaton products, the Quick-Pro symbol allows for immediate recognition of products that are designed for straightforward installation. When you see Quick-Pro, you know you can install quickly—sometimes up to 50% less than the usual installation time—and move on to your next job.

Features, Benefits and Functions

- Factory-installed terminal block(s) allows installer to terminate existing short wires without using wire nuts or junction boxes
- Twin-stacked neutrals are mounted up high in the loadcenter, which allows for all neutral and ground wires to be terminated in the top half of the loadcenter
- Specifically designed for the service contractor—this is the ONLY renovation line in the industry
- Single-pole and two-pole breakers included
- 10-year warranty on loadcenter and breakers

Product Selection

BR2020B100RN

BR Value Packs ①

Main Breaker Type	Description	Wire Size Range	Number of 5-Circuit Terminal Blocks	Single-Pole Breakers	Two-Pole Breakers	Catalog Number
BR 10 kAIC	Single-phase 100 A 10k main breaker 10/20 circuit surface-mount box is 11.75" wide x 13" tall	#6–1/0	0	(2) BR115	(1) BR230	**BR1020B100SRNV**
	Single-phase 100 A 10k main breaker 10/20 circuit flush-mount box is 11.75" wide x 13" tall		0	(2) BR115	(1) BR230	**BR1020B100FRNV**

Note

① Indoor enclosure type.

Options and Accessories

BRSF125

3BRS225

BRL200

TDL

Field Installation Kits and Parts

Number of Poles	Ampere Rating	Number of 1-Inch (25.4 mm) Spaces Needed	Wire Size Range Cu/Al 60 °C or 75 °C	Ordering Quantity ①	Catalog Number
Main and Sub-Feed Lug Blocks					
2	125	2	#8–2/0	1	**BRSF125**
	150	2	#8–2/0	1	**BRSF150** ②
	225	4	#2–300 kcmil	1	**BRS225**
3	150	3	#8–2/0	1	**3BRSF150** ②
	225	6	#2–300 kcmil	1	**3BRS225**
Main Lugs					
Two-pole, 200 A stud mounted (includes deadfront filler plate)			#1–300 kcmil	1	**BRL200**
Neutral/ground lug Add-on neutral or ground lug			#2/0 maximum	1	**NL20**
			#3/0 maximum	1	**NL30**
			300 kcmil maximum	1	**NL300**
Filler Plates					
1-inch (25.4 mm) circuit breaker space				25	**BRFP**
BW main circuit breaker space (with hardware)				1	**BWFP**
Door lock —12–42 circuits, and 100–225 A				1	**TDL**
Door lock—4–8 circuits, 125 A				1	**CH9FL**
ANSI-61 light gray touchup paint for current loadcenters				1	**SPC61**
Isolated neutral assembly (computer circuits)				1	**BINA**
Circuit directory—adhesive backed				10	**TCD**
Cover screws				25	**LCCS**
Cover replacement latch (gray) 14-5/16 (363.5 mm) wide loadcenters only				1	**BRRL**
Circuit marking strip (next to breaker)				10	**BRMS**
Circuit identification label (preprinted breaker labels)				25	**CHBL**
Series rated caution label				25	**SRL**
Bonding strip with screw				1	**BSSUSE**

Notes

① Must be purchased in multiples of ordering quantities indicated.
② #8–2/0 wire size range is 75 °C rated only.

Type BR Loadcenter with Mechanical Interlock Kit

Contents

Description	*Page*
Overview	**V1-T1-42**
BR Specialty Products	
BR Quick Connect Neutral Loadcenters	**V1-T1-57**
Spa Panels	**V1-T1-58**
Riser Panel	**V1-T1-59**
Type BR Renovation Loadcenter	**V1-T1-60**
Type BR Retrofit Interior Kits	**V1-T1-73**
Type BR Mechanical Interlock Kits	
BR Circuit Breakers	
Product Selection	**V1-T1-77**
Circuit Breaker Accessories	**V1-T1-85**
Wiring Diagrams	**V1-T1-87**

Type BR Mechanical Interlock Kits

Product Description

With the aging electrical infrastructure and frequent severe storms, power outages are becoming more and more frequent, affecting thousands of people nationwide. Eaton mechanical interlock kit provides an easy and cost-effective solution when using backup emergency power.

This solution expands the robust line of emergency power products and accessories.

Features and Benefits

- Prevents utility and generator supplies from being on at the same time
- Protects utility linemen from dangerous generator backfeed
- Robust interlock design
- Offered in two unique styles for almost any BR loadcenter, which can reduce inventory levels
- Quick and easy installation—drill points or fixtures for pilot holes are provided on all applicable BR loadcenters; no additional assembly is required

Standards and Certifications

- UL 67 Listed—For use with BR loadcenters
- Meets NEC® Article 702

Product Selection

Each mechanical interlock kit includes:

- Interlock assembly
- Hold down kit ①
- New labels
- Necessary screws

Warranty information:

- 10-year warranty on all Type BR circuit breakers and loadcenters
- Refer to Eaton for complete warranty details

Mechanical Interlock Kits ②

	Description	Catalog Number
BRMIKBR	Single	**BRMIKBR**
	Bulk pack ③	**BRMIKBRBP**
BRMIKCSR	Single	**BRMIKCSR**
	Bulk pack ③	**BRMIKCSRBP**

Notes

① For breakers under 70 A used in backfed applications, add "B" to the end of the catalog string to get the appropriate "hold-down" version.
② Clamshell packaged.
③ Bulk pack contains 10 units, individually packaged.

1

Mechanical Interlock Cover

Covers mechanically interlock two breakers—Type BW or CSR main breaker with a Type BR branch breaker.

BR816B100

Mechanical Interlock Cover

Fits Loadcenter Catalog Numbers	Mechanical Interlock Trim/Deadfront Catalog Numbers	Mechanical Interlock Kit Catalog Numbers
Indoor		
BR816B100	BRCOVC10M	BRMIKBR
BR816N100		
BR1212B100	BRCOVC12M	
BR1220B100		
BR1220H100		
BR1224N125	BRCOVC13M	
BR1616B100	BRCOVC16M	
BR1620B100		
BR1624B100		
BR1624B125	BRCOVC17M	
BR1624N125		
BR2020B100, BR2020BC100 BR2020H100, BR2020HC100	BRCOVC22M	
BR2024H100		
BR2020HC100		
BR2030B100		
BR2040B100		
BR2024B125	BRCOVC23M	
BR2024N125, BR2024NC125		
BR3030B100, BR3030BC100	BRCOVC59M	
BR3030H100, BR3030HC100		
Raintight		
BR1020B100R	BR3RDF1M	Field-installed interlock kits not available for these catalog numbers.
BR1224B100R		
BR1224N125R, BR1224NC125R		
BR1624B100R	BR3RDF2M	
BR1624N125R		
BR2024B100R, BR2024B125R	BR3RDF4M	
BR2024N125R, BR2024NC125R		

BR4040B200

Mechanical Interlock Cover, continued

Fits Loadcenter Catalog Numbers	Mechanical Interlock Trim/Deadfront Catalog Numbers	Mechanical Interlock Kit Catalog Numbers
Indoor		
BR1630B150	BRCOV16C4FM	BRMIKCSR
BR1224N200		
BR1632B200		
BR1632N200		
BR2030B150	BRCOV20C4FM	
BR2030H150		
BR2040B150		
BR2040B200, BR2040BC200	BRCOV20D1FM	
BR2040H200		
BR2040N200, BR2040NC200		
BR2430B150, BR2430BC150	BRCOV30G1FM	
BR3030B150		
BR3030H150		
BR3040B150		
BR2440B200		
BR2440N200		
BR3040B200, BR3040BC200		
BR3040N200, BR3040NC200		
BR3040H200		
BR4040B200, BR4040BC200	BRCOV40L1FM	
BR4040H200		
BR4040N200, BR4040NC200		
BR4242B225	BRCOV42L2FM	
Raintight		
BR816B150RF	BR3RDF5M ①	
BR816B200RF		
BR816N200RF		
BR1224N200R		
BR2030B150R	BR3RDF11M ①	
BR2040B150R		
BR2040B200R		
BR2040B225R		
BR2040N200R		
BR3030B150R	BR3RDF12M ①	
BR3040B200R		
BR3040N200R		
BR4040B200R	BR3RDF13M ①	
BR4040N200R		
BR48B200RF	BR3RDF14M	
BR4242B225R	BR3RDF15M ①	
Mechanical Interlock Loadcenter Replacement Covers ②		
BR2020B100M, BR2020BC100M	BRCOV20C2FM	Field-installed interlock kits not available for these catalog numbers.
BR2024H100M		
BR3030BC100M	BRCOV30D1FM	

Notes

① Deadfront only.

② Can only be provided as replacement covers for factory-installed mechanically interlock loadcenters.

DS300H2

Field Installation Rainproof Conduit Hubs

Description	Conduit Size Inches (mm)	Ordering Quantity ①	Catalog Number
Group 1—for use with 70, 100 and 125 A MLO and MCB loadcenters and circuit breaker enclosures and the following 150 and 200 A panels: BR48B200RF	0.75 (19.1)	1	**DS075H1**
	1.00 (25.4)	1	**DS100H1**
	1.25 (31.8)	1	**DS125H1**
	1.50 (38.1)	1	**DS150H1**
	2.00 (50.8)	1	**DS200H1**
Group 2—for use with 150, 200 and 225 A MLO and MCB loadcenters and circuit breaker enclosures except for the following 200 A loadcenters: BR48B200RF. Also for use with 400 and 600 A loadcenters and New York City loadcenters manufactured after November 1, 2005	2.00 (50.8)	1	**DS200H2**
	2.50 (63.5)	1	**DS250H2**
	3.00 (76.2)	1	**DS300H2**
Type H conduit hubs for loadcenters PL0724R and S3100RN	0.75 (19.1)	1	**RH75P**
	1.00 (25.4)	1	**RH100P**
	1.25 (31.8)	1	**RH125P**
	1.50 (38.1)	1	**RH150P**
Adapter kit—Allows Installing a Group 1 hub on devices arranged for Group 2 hubs	—	1	**DS900AP**
Group 1 small blank hub plate with bump	—	1	**DS900CP1**
Group 2 Large blank hub plate with bump	—	1	**DS900CP2**

GBK14

BRGBK39512

Ground Bar Kits

Description (See Legend)	Length Inches (mm)	Ordering Quantity ①	Catalog Number
●○○○○●○	2.54 (64.5)	1	**GBK5** ②
●○○○○●○■	3.59 (91.2)	1	**GBK520** ②
●○○○○●○○○○○○	4.29 (109.0)	1	**GBK10** ②
●○○○○●○○○○○○■	5.34 (135.6)	1	**GBK1020** ②
◒●◒◒◒⬓◒●◒⬓◒◒◒	4.61 (117.1)	1	**GBK13** ②
●○○○○●○○○○○○○○○○	5.69 (144.5)	1	**GBK14** ②
●○○○○●○○○○○○○○○○■	6.74 (171.2)	1	**GBK1420** ②
●○○○○●○○○○○○○○○○○○○○○○	8.14 (206.8)	1	**GBK21** ②
●○○○○●○○○○○○○○○○○○○○○○○■	9.19 (233.4)	1	**GBK2120** ②
◒⬓◒●◒⬓◒◒◒⬓◒●◒⬓◒◒◒⬓◒	5.78 (146.8)	1	**BRGBK39512** ③④
○○○○○	1.84 (46.7)	1	**GB4NM** ⑤

Ground Bar Legend

- ○ (3) #14–10 Cu/Al or (1) #14–4 Cu/Al
- ■ (1) #6–2/0 Cu/Al
- ⬓ (1) #14–1/0 Cu/Al or (3) #14–10 Cu/Al
- ◒ (1) #14–6 Cu/Al or (2) #14–12 Cu/Al
- ● Mounting Hole

Notes

① Must be purchased in multiples of ordering quantities indicated.
② Distance between mounting holes is 1.75 inches (44.5 mm).
③ For single- and three-phase 400 and 600 A applications.
④ Distance between mounting holes is 2.34 inches (59.5 mm).
⑤ For non-metallic enclosures. Snaps into molded base.

Dimensions

Approximate Dimensions in Inches (mm)

Residential/Commercial/New York City Loadcenters, Unit Enclosures—Box Sizes

Note: Box sizes do not include covers/fronts.

Residential Loadcenters—NEMA Type 1 Indoor

Box Size	Height	Width	Depth
A1	15.00 (381.0)	11.25 (285.8)	3.75 (95.3)
B1	16.75 (425.5)	14.31 (363.5)	3.88 (98.4)
B2	18.75 (476.3)	14.31 (363.5)	3.88 (98.4)
C1	21.00 (533.4)	14.31 (363.5)	3.88 (98.4)
C2	23.00 (584.2)	14.31 (363.5)	3.88 (98.4)
C4	27.00 (685.8)	14.31 (363.5)	3.88 (98.4)
D1	29.13 (739.8)	14.31 (363.5)	3.88 (98.4)
G1	34.13 (866.8)	14.31 (363.5)	3.88 (98.4)
L1	39.00 (990.6)	14.31 (363.5)	3.88 (98.4)
L2	45.00 (1143.0)	14.31 (363.5)	3.88 (98.4)
L3	48.38 (1228.3)	14.31 (363.5)	3.88 (98.4)
2	8.63 (219.1)	5.00 (127.0)	3.50 (88.9)
3	9.44 (239.7)	4.50 (114.3)	3.00 (76.2)
4	13.00 (330.2)	11.00 (279.4)	3.56 (90.5)
5	9.44 (239.7)	4.50 (114.3)	3.00 (76.2)
6	12.00 (304.8)	6.88 (174.6)	4.50 (114.3)
7	13.00 (330.2)	11.00 (279.4)	3.56 (90.5)
9	14.50 (368.3)	6.50 (165.1)	3.50 (88.9)

Residential Loadcenters—NEMA Type 3R Outdoor

Box Size	Height	Width	Depth
B1R	16.75 (425.5)	14.31 (363.5)	5.19 (131.8)
B2R	18.75 (476.3)	14.31 (363.5)	5.19 (131.8)
C3R	25.00 (635.0)	14.31 (363.5)	5.19 (131.8)
D1R	29.13 (739.8)	14.31 (363.5)	5.19 (131.8)
G1R	34.13 (866.8)	14.31 (363.5)	5.19 (131.8)
L1R	39.00 (990.6)	14.31 (363.5)	5.19 (131.8)
L2R	45.00 (1143.0)	14.31 (363.5)	5.19 (131.8)
L3R	48.75 (1238.2)	14.31 (363.5)	5.19 (131.8)
2R	8.63 (219.1)	5.00 (127.0)	3.50 (88.9)
3R	9.44 (239.7)	4.50 (114.3)	3.00 (76.2)
4R	13.00 (330.2)	11.00 (279.4)	3.56 (90.5)
5R	9.44 (239.7)	4.50 (114.3)	3.00 (76.2)
6R	11.75 (298.5)	6.50 (165.1)	4.50 (114.3)
7R	13.00 (330.2)	11.00 (279.4)	3.56 (90.5)
8R	27.00 (685.8)	10.50 (266.7)	4.75 (120.7)
9R	14.25 (362.0)	6.50 (165.1)	4.00 (101.6)
C1R	21.00 (533.4)	14.31 (363.5)	5.19 (131.8)

Commercial Loadcenters—NEMA Type 1 Indoor

Box Size	Height	Width	Depth
19	44.00 (1117.6)	16.16 (410.4)	6.25 (158.8)
20	44.00 (1117.6)	16.16 (410.4)	6.25 (158.8)
22	54.00 (1371.6)	16.22 (412.0)	6.31 (160.3)
24	66.50 (1689.1)	16.22 (412.0)	6.31 (160.3)

Commercial Loadcenters—NEMA Type 3R Outdoor

Box Size	Height	Width	Depth
42	38.00 (965.2)	16.31 (414.3)	6.38 (161.9)
43	44.00 (1117.6)	16.31 (414.3)	6.38 (161.9)
46	54.00 (1371.6)	16.31 (414.3)	6.38 (161.9)
47	66.56 (1690.7)	16.31 (414.3)	6.38 (161.9)

New York City Loadcenters—NEMA Type 1 Indoor

Box Size	Height	Width	Depth
A	38.00 (965.2)	18.13 (460.4)	5.00 (127.0)
B	44.00 (1117.6)	18.13 (460.4)	5.00 (127.0)
C	66.50 (1689.1)	18.13 (460.4)	6.25 (158.8)

ECC Unit Enclosures—NEMA Type 1 Indoor

Height	Width	Depth
23.25 (590.6)	8.88 (225.4)	4.50 (114.3)

ECC Unit Enclosures—NEMA Type 3R Outdoor

Height	Width	Depth
23.68 (601.7)	9.31 (236.5)	5.44 (138.1)

1

Approximate Dimensions in Inches (mm)

Residential Loadcenter Knockouts

Knockouts for Box Sizes A1, B1, B2, C1, C2, C4, D1, G1, L1, L2, B1R, B2R, C1R, C3R, D1R, G1R, L1R, L2R

Code	Diameter				
A	0.50 (12.7)	0.75 (19.1)	—	—	—
B	0.50 (12.7)	—	—	—	—
C	0.50 (12.7)	1.25 (31.8)	1.50 (38.1)	2.00 (50.8)	2.50 (63.5)
D	1.25 (31.8)	1.25 (31.8)	2.00 (50.8)	2.50 (63.5)	—
E	0.50 (12.7)	0.75 (19.1)	1.00 (25.4)	—	—
F	0.50 (12.7)	0.75 (19.1)	1.00 (25.4)	1.50 (38.1)	2.00 (50.8)
G	1.25 (31.8)	1.50 (38.1)	2.00 (50.8)	—	—
H	0.50 (12.7)	0.75 (19.1)	1.00 (25.4)	1.25 (31.8)	1.50 (38.1)
I	1.00 (25.4)	1.25 (31.8)	1.50 (38.1)	2.00 (50.8)	2.50 (63.5)
J	1.00 (25.4)	1.25 (31.8)	1.50 (38.1)	—	—

Residential NEMA Type 1 Indoor and NEMA Type 3R Outdoor Enclosures

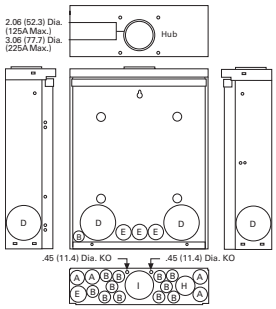

Outdoor Boxes B1R, B2R, C1R, C3R, D1R, G1R, L1R, L2R

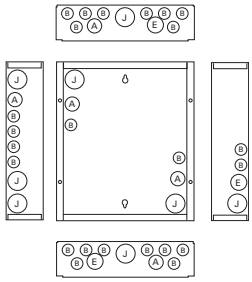

Indoor Boxes A1

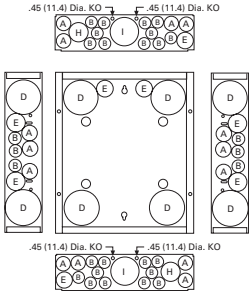

Indoor Boxes B1, B2

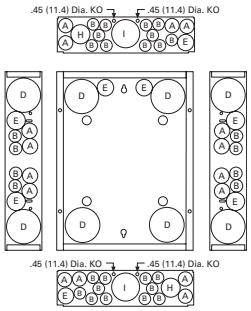

Indoor Boxes C1, C2, C4, D1, G1, L1, L2

Approximate Dimensions in Inches (mm)

Knockouts for Box Sizes 3, 4, 5, 6, 7, 9, 2R, 3R, 4R, 5R, 6R, 7R, 8R, 9R

Code	Diameter			
A	0.50 (12.7)	—	—	—
B	0.50 (12.7)	0.75 (19.1)	—	—
C	0.50 (12.7)	0.75 (19.1)	1.00 (25.4)	—
D	0.50 (12.7)	0.75 (19.1)	1.00 (25.4)	1.25 (31.8)
E	0.75 (19.1)	1.00 (25.4)	1.25 (31.8)	—
F	0.75 (19.1)	1.00 (25.4)	1.25 (31.8)	1.50 (38.1)
G	1.00 (25.4)	1.25 (31.8)	1.50 (38.1)	—
H	1.00 (25.4)	1.25 (31.8)	1.50 (38.1)	2.00 (50.8)
I	1.25 (31.8)	1.50 (38.1)	2.00 (50.8)	—

Residential NEMA Type 1 Indoor and NEMA Type 3R Outdoor Enclosures

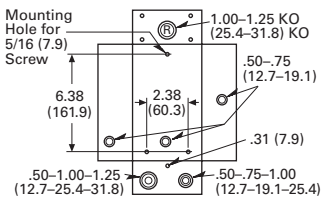

Box 2, 2R

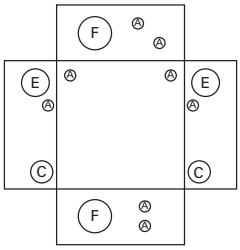

Box 3

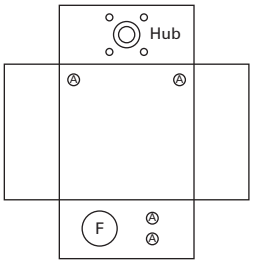

Box 3R

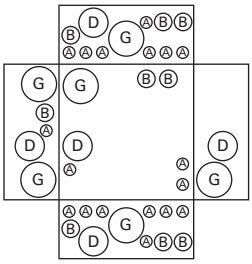

Box 4

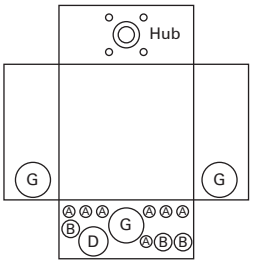

Box 4R

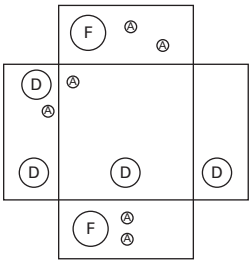

Box 5

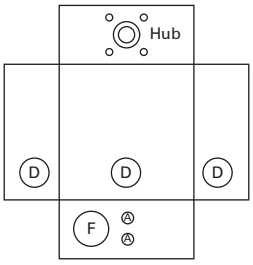

Box 5R

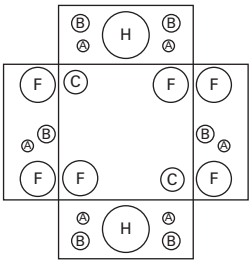

Box 6

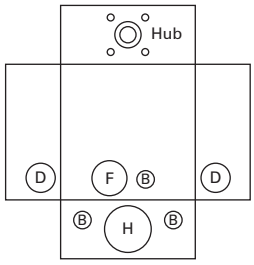

Box 6R

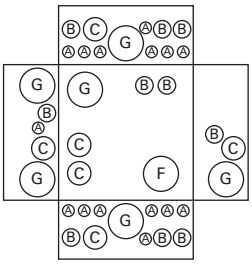

Box 7

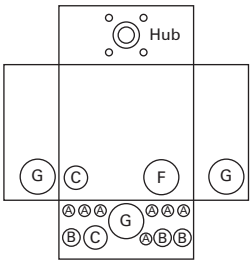

Box 7R

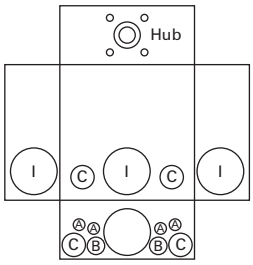

Box 8R

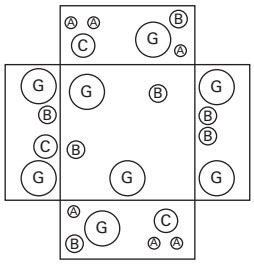

Box 9

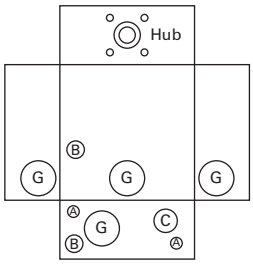

Box 9R

1

Approximate Dimensions in Inches (mm)

Commercial Loadcenter Knockouts

NEMA Type 1 Indoor Commercial Enclosures Knockouts for Box Sizes 19, 20, 22, 24

Code	Diameter			
A	0.50 (12.7)	—	—	—
B	0.50 (12.7)	0.75 (19.1)	—	—
C	0.75 (19.1)	1.00 (25.4)	1.50 (38.1)	—
D	1.50 (38.1)	2.00 (50.8)	2.50 (63.5)	3.00 (76.2)
E	2.00 (50.8)	2.50 (63.5)	3.00 (76.2)	—
F	2.50 (63.5)	3.00 (76.2)	3.50 (88.9)	—

NEMA Type 3R Outdoor Commercial Enclosures Knockouts for Box Sizes 42, 43, 46, 47

Code	Diameter			
A	0.50 (12.7)	—	—	—
B	0.50 (12.7)	0.75 (19.1)	—	—
C	0.75 (19.1)	1.00 (25.4)	1.25 (31.8)	—
D	1.50 (38.1)	2.00 (50.8)	2.50 (63.5)	—
E	2.00 (50.8)	2.50 (63.5)	3.00 (76.2)	—
F	2.50 (63.5)	3.00 (76.2)	3.50 (88.9)	—
G	1.25 (31.8)	1.50 (38.1)	2.00 (50.8)	2.50 (63.5)
H	3.25 (82.6) Sq.	—	—	—

Unit Enclosure Knockouts, Types ECB and ECC Knockouts

Code	Diameter				
NEMA Type 1 Indoor (Flush and Surface Trims)					
A	0.50 (12.7)	—	—	—	—
B	1.25 (31.8)	1.50 (38.1)	1.75 (44.5)	2.00 (50.8)	2.50 (63.5)
NEMA Type 3R Outdoor					
A	0.50 (12.7)	—	—	—	—
B	1.25 (31.8)	1.50 (38.1)	1.75 (44.5)	2.00 (50.8)	2.50 (63.5)

Indoor Commercial Enclosures

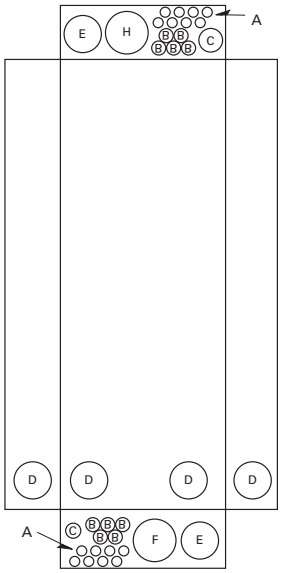

Box 19, 20

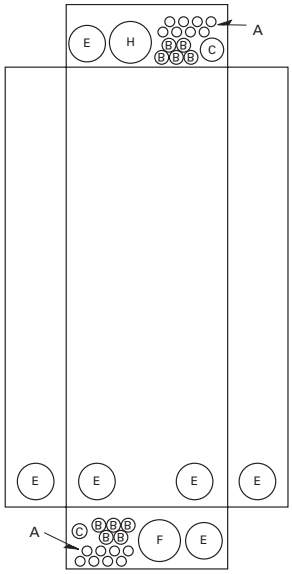

Box 22, 24

Outdoor Commercial Enclosures

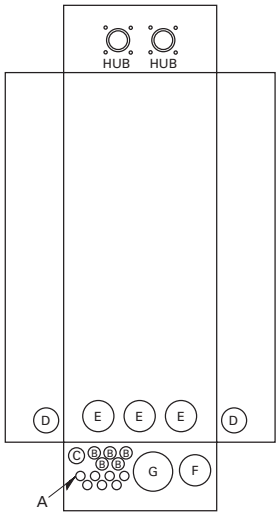

Box 42

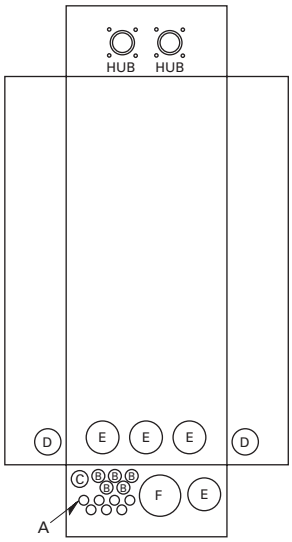

Box 43, 46, 47

Unit Enclosure Knockouts

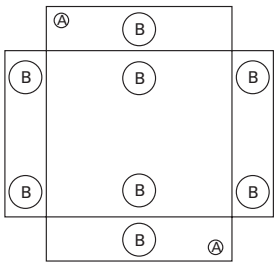

NEMA Type 1—Indoor

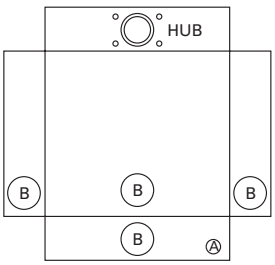

NEMA Type 3R—Outdoor

Technical Data and Specifications

General

A. The Contractor shall furnish and install deadfront loadcenters incorporating circuit breakers of the number, rating and type as specified herein and as shown on the contract drawings.

B. The loadcenter and all components shall be designed, manufactured and tested in accordance with the latest applicable standards of UL, NEMA and NEC including:

1. UL 67—Standards for Panelboards.

C. UL 50—Standards for Cabinets and Boxes.

D. UL 489—Standards for Molded Case Circuit Breakers.

E. UL 869—Standards for Service Equipment.

F. Federal Specification W-C 375B—Circuit Breakers.

G. Federal Specification W-C P115b—Panel Power Distribution Type 1, Class 2.

Qualifications

A. The manufacturer of the loadcenter shall be the manufacturer of the circuit breaker within the loadcenter.

B. For the equipment specified herein, the manufacturer shall be ISO 9000 certified.

C. The manufacturer of this equipment shall have produced similar electrical equipment for a minimum period of seven (7) years.

Manufacturers

A. Eaton.

Ratings

A. Loadcenters shall be rated for 120/240 Vac and shall have short-circuit ratings as shown on the drawings or as herein scheduled, but not less than 10,000 amperes rms symmetrical.

B. Circuit breakers shall be a minimum of 125 A frame. Circuit breakers 15 through 125 A trip size shall take up the same pole spacing.

C. Loadcenters shall be labeled with a UL short-circuit rating. When series combination ratings are applied with integral or remote upstream devices, a label shall be provided. Series combination ratings shall cover all trip ratings of installed frames. It shall state the conditions of the UL series ratings including:

1. Size and type of upstream device.

2. Branch devices that can be used.

3. UL series short circuit rating.

Construction

A. All interiors, with the exception of the branch circuit breakers, shall be completely factory assembled with main breakers, main lugs, or no main device.

B. Interiors shall be designed so that circuit breakers can be replaced without disturbing adjacent units and without removing the main bus connectors and shall be designed so that circuits may be changed without machining, drilling, or tapping.

C. Physical means shall be provided to prevent the installation of more overcurrent devices than that number for which the enclosure was designed, rated and approved. Half-size breakers shall have a UL listed rejection tab over the line terminals. Loadcenter interiors must have notched stabs to accept these rejection tab class CTL breakers, if required and approved.

Bus

A. Busbars for the main and cross connectors shall be [tin-plated aluminum] [copper] in accordance with Underwriters Laboratories standards. Busing shall be braced throughout to conform to industry standard practice governing short-circuit stresses in loadcenters.

Note: Note to spec writer—select one (copper available in limited ratings).

B. Neutral busing shall have a suitable lug for each outgoing feeder requiring a neutral connection of same ampacity as branch.

Wiring/Termination

A. All wire connectors and terminals shall be of the anti-turn solderless type and shall be suitable for copper or aluminum wire of the sizes indicated. All connectors must meet the "Requirements for Wire Connectors and Soldering Lugs" as stated in UL 486B.

B. All loadcenters where marked shall be suitable for use with 60 °C or 75 °C rated wire.

Circuit Breakers

A. Circuit breakers shall be molded case type. Circuit breakers shall have four-rivet construction (GFI Type—5 rivets). Multipole circuit breakers shall be of a stack pole design to provide electrical phase isolation.

B. Each pole of the circuit breaker will provide inverse time delay overload and instantaneous short-circuit protection by means of both thermal and magnetic sensors.

C. The circuit breaker calibration shall not be affected by environmental changes in relative humidity. The thermal bimetal element shall be welded to the steel frame and calibration shall be set independent of the molded case by computer controlled equipment.

D. All circuit breakers shall be operated by a toggle-type handle and multipole circuit breakers shall have an internal common trip mechanism. The circuit breakers shall incorporate trip mechanisms that are mechanically trip-free from the handle. The handle position shall provide visual trip indication.

E. Contacts shall be of non-welding silver alloy.

F. All circuit breakers shall have the trip rating inscribed on the handle on each circuit breaker pole. Also, unique color-coded cases that indicate the UL listed 10 kA or 22 kA interrupting ratings. Breakers shall be able to be used as main or branch disconnect devices.

G. Branch circuit breakers may also be used in the 1/2-inch (12.7 mm) per pole ratings that include two-pole 1-inch (25.4 mm) wide modules and four-pole 2-inch (50.8 mm) wide modules. Two-pole circuit breakers must incorporate a common trip mechanism. The exclusive CTL rejection tab feature shall be provided to limit the number of branch devices for a loadcenter to 42, in compliance with NEC Article 384.15.

H. Circuit breakers shall be completely enclosed in a molded case of thermoset material. No internal aluminum parts shall be used. All internal ferrous parts shall be plated to prevent corrosion.

I. All terminals shall be listed for use with copper or aluminum conductors. Terminals shall be of the box lug or clamp type design. The terminals shall meet UL 486B requirements and shall be suitable for use with either 60 °C or 75 °C wire.

J. The calibrated bimetal assembly shall be mechanically isolated from the load terminal using a flexible braided copper shunt wire, such that movement of the terminals due to twisting and overtorquing does not affect breaker calibration.

K. Breakers shall be SWD rated and/or HACR rated as required.

L. Arc Fault Interrupting circuit breakers, (AFI), shall be provided on all 15 and 20 A single-phase 120/240 Vac circuits except those indicated as remote controlled breakers. AFI breakers shall be "Classified for mitigating the effects of arcing faults," or conforming to UL Standard 1699 and as defined by Article 210.12 Section A of the 1999 NEC Code.

Surge Protection Devices

See Volume 1, Tab 2 for complete details on surge protection.

Enclosures

A. Loadcenter shall have NEMA Type 1 general purpose or NEMA Type 3R rainproof enclosures as indicated on the drawings and shall be surface or combination flush/surface mounted except where noted.

B. Boxes shall be made from galvanized sheet steel having multiple knockouts. Rainproof boxes shall use galvanized steel or an approved coating system which meets or exceeds standards for outdoor NEMA Type 3R enclosures. Boxes shall be of sufficient size to provide at least a minimum code gutter space on all sides.

C. The deadfront shall have an easy adjustment feature for flush applications.

D. Boxes shall be factory assembled into a single rigid structure.

E. Unless otherwise noted on drawings, hinged doors covering all circuit breaker handles shall be included in all trims. Trim doors shall not uncover any live parts in making the circuit breaker handles accessible. If key locks are required, all locks shall be keyed alike.

F. Combination trims for flush and surface panels shall be flat and shall overlap the box by at least 5/8-inch (15.9 mm) all around. Trims shall be mounted by a screwdriver without the need for special tools.

Finish

A. Trims shall be bonderized and finished with a light gray ANSI-61 enamel. The paint finish shall be of a type to which field applied paint will adhere.

Factory Testing

A. The standard factory tests shall be performed on the equipment provided under this section. All tests shall be in accordance with the latest version of UL and NEMA.

Type BR Retrofit Interior

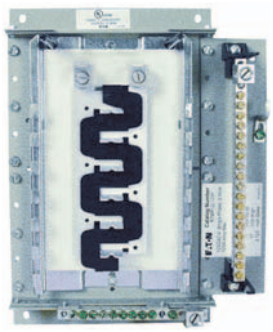

Type BR Retrofit Adjustable Interior

Type BR Retrofit Interior Collar and Assembly with Trim

Contents—BR Specialty Products

Description	*Page*
Overview	V1-T1-42
BR Specialty Products	
BR Quick Connect Neutral Loadcenters	V1-T1-57
Spa Panels	V1-T1-58
Riser Panel	V1-T1-59
Type BR Renovation Loadcenter	V1-T1-60
Type BR Mechanical Interlock Kits	V1-T1-62
Type BR Retrofit Interior Kits	
BR Circuit Breakers	V1-T1-76

Type BR Retrofit Interior Kits

Product Description

Eaton's unique Retrofit Interior allows the customer to cost-effectively and safely upgrade an electrical service without removing the existing enclosure from the wall.

Quick-Pro℠

All you need to know to save time and make more money. Specified on certain Eaton products, the Quick-Pro symbol allows for immediate recognition of products that are designed for straightforward installation. When you see Quick-Pro, you know you can install quickly—sometimes up to 50% less than the usual installation time—and move on to your next job.

Application Description

The Retrofit Interior is designed and tested specifically for renovating an outdated electrical panel in an apartment, a condominium or a single family home. These outdated panels are being recognized by local inspectors and other authorities as a possible hazard.

Opportunities to Retrofit

- Single- or three-phase
- Main lug only or main breaker
- Up to 42 circuits
- Up to 225 A interiors, 400 A available upon request
- Available with CH breakers (3/4-inch) with copper bus or BR breakers (1-inch) with aluminum bus
- The minimum lifetime warranty for residential breakers shall be as follows:
  - 10-year warranty on all BR branch breakers and loadcenters
  - Refer to Eaton for complete warranty details

Features and Benefits

Upgrading Existing Electrical Infrastructure Is Simple

- Replaces vintage brands that have hard to find, expensive replacement breakers
- Safety upgrade to arc fault and ground fault breakers to meet current electrical codes
- Maximizes number of circuits available with compact design
- Eco-friendly in asbestos-filled environments
- Exclusive design

Save Time and Money Throughout the Installation

- Uses existing panel box and wires
- Eliminates expensive and time-consuming drywall/paint repair
- Saves 2–3 hours of installation time compared to a complete panel changeout
- Eliminates precise measurements with field-adjustable kit

Detailed Product Guide

All standard retrofit kits are suitable for a range of existing box sizes:

- Box width ranging from 14.50 to 22.00 inches (368.3 to 558.8 mm)
- Box depth ranging from 4.00 inches (101.6 mm) for BR
- Box height ranging from 21.00 to 45.00 inches (533.4 to 1143.0 mm)

For box dimensions outside of these ranges, contact the Lincoln Flex Center at 800-330-6479. Be sure to provide the existing incoming line wire size.

Standards and Certifications

- Meets 2008/2011/2014 NEC wire bending requirements
- UL 67 Listed (for UL listings for specific part numbers, see the table on the following page.

1

BR Specialty Product Selection

To select the retrofit kit:

1. From the existing box size determine which retrofit groups are suitable (may be more than one).
2. Use type of interior, number of phases, and type of main to find the selection chart.
3. Select part number from chart (if main breaker, replace XXX with specific amp rating).
4. Note that the overlap of the existing wall is the retro cover size minus the existing box size. If specific measurements are needed, communicate that you need a custom trim size.
5. Contact the Lincoln Flex Center at 800-330-6479 for pricing, lead-times, and order entry instructions.

How to Order:

1. Measure the existing panel enclosure to determine appropriate kits for your project.
2. Match the existing dimensions with the table below to obtain the correct catalog number.
3. Order your retrofit kit from a local Eaton authorized distributor.

Need assistance or can't find retrofit to fit existing enclosure?

Call Eaton's Residential Flex Center at 1-800-330-6479 or email for all your retrofit needs. Go to www.eaton.com/eccn to locate an Eaton Certified Contractor.

Retrofit Interior Kit Specifications

Five recommended groups: existing box height determines retro group size. Approximate Dimensions in Inches (mm).

		Existing Enclosure Parameters—Inches (mm)									
Catalog Number ①	**Cover ②**	**Minimum Depth**	**Maximum Depth**	**Minimum Width**	**Minimum Height**	**Phase**	**Main**	**Bus**	**Amperes ③**	**Spaces / Circuits**	**UL 67 Listed**
BR Retrofit Interiors and Covers											
RTBR8L100P	**CRTBR8ML******	3.13 (79.5)	3.63 (92.2)	10.50 (266.7)	13.00 (330.2)	Single	MLO	BR	100	16	Yes
RUBR8L100_	**CRUBR8ML******	3.75 (95.3)	6.00 (152.4)	10.50 (266.7)	13.00 (330.2)	Single	MLO	BR	100	16	Yes
RTBR12L100P	**CRTBR12ML******	3.13 (79.5)	3.63 (92.2)	10.50 (266.7)	14.50 (368.3)	Single	MLO	BR	100	24	Yes
RTBR10B100P	**CRTBR12ML******	3.13 (79.5)	3.63 (92.2)	10.50 (266.7)	14.50 (368.3)	Single	MLO	BR	100	20	Yes
RUBR12L100_	**CRUBR12ML******	3.75 (95.3)	6.00 (152.4)	10.50 (266.7)	14.50 (368.3)	Single	MLO	BR	100	24	Yes
RUBR10B100_	**CRUBR12ML******	3.75 (95.3)	6.00 (152.4)	10.50 (266.7)	14.50 (368.3)	Single	MB	BR	100	20	Yes
RTBR12L125P	**CRTBR12ML******	3.13 (79.5)	3.63 (92.2)	11.00 (279.4)	17.00 (431.8)	Single	MLO	BR	125	24	Yes
RTBR10B125P	**CRTBR12ML******	3.13 (79.5)	3.63 (92.2)	11.00 (279.4)	17.00 (431.8)	Single	MB	BR	125	20	Yes
RUBR12L125_	**CRUBR12ML******	3.75 (95.3)	6.00 (152.4)	11.00 (279.4)	17.00 (431.8)	Single	MLO	BR	125	24	Yes
RUBR10B125_	**CRUBR12ML******	3.75 (95.3)	6.00 (152.4)	11.00 (279.4)	17.00 (431.8)	Single	MB	BR	125	20	Yes
RABR20B125_	**CRABR20ML******	3.75 (95.3)	6.00 (152.4)	13.00 (330.2)	21.00 (533.4)	Single	MCB	BR	125	24	No
RABR20L125_	**CRABR20ML******	3.75 (95.3)	6.00 (152.4)	13.00 (330.2)	21.00 (533.4)	Single	MLO	BR	125	24	No
RBBR20B200_	**CRBBR20BW******	3.75 (95.3)	6.00 (152.4)	13.00 (330.2)	29.00 (736.6)	Single	MLO	BR	200	40	No
RCBR40L200_	**CRCBR40ML******	3.75 (95.3)	6.00 (152.4)	13.00 (330.2)	34.00 (863.6)	Single	MLO	BR	200	40	No
RDBR40B200_	**CRDBR40BW******	3.75 (95.3)	6.00 (152.4)	13.00 (330.2)	37.00 (939.8)	Single	MLO	BR	200	40	No

Notes

① Catalog numbers shown with "_" at the end need one of the following suffixes to denote depth:
J = 3.75–4.25
K = 4.25–5.00
L = 5.00–6.00
Example: RTBR12L125J would signify an interior set with a depth range of 3.75 to 4.25 inches.

② ****Denotes characters in the catalog number that relate to overall cover size.
Example: CRTBR12ML2620 would signify a cover 26.00 inches H x 20.00 inches W.

③ Amperes for MB panels is maximum; catalog number will reflect actual amperage of breaker included.

For UL applications, maximum cover sizes may apply.

Complete Assembly

Note: For complete assembly, interior and cover need to be ordered separately.

Adjustable Interior

- Factory installed ground and neutral bars positioned to accept existing wires
- Field adjustable depth matches existing panel box
- Adjustable height enables optional placement of the interior
- Field bondable for service entrance options

Adjustable Interior

Standard Trim and Collar

- Standard trim matches new interior
- New circuit directory for updated labeling
- Oversized collar eliminates expensive wall/paint repair

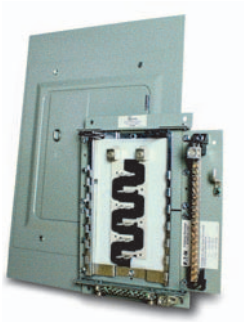

Collar and Assembly with Trim

BR Circuit Breakers

Contents

Description	*Page*
Overview	**V1-T1-42**
BR Specialty Products	
BR Quick Connect Neutral Loadcenters	**V1-T1-57**
Spa Panels	**V1-T1-58**
Riser Panel	**V1-T1-59**
Type BR Renovation Loadcenter	**V1-T1-60**
Type BR Mechanical Interlock Kits	**V1-T1-62**
Type BR Retrofit Interior Kits	**V1-T1-73**
BR Circuit Breakers	
Product Selection	**V1-T1-77**
Circuit Breaker Accessories	**V1-T1-85**
Wiring Diagrams	**V1-T1-87**

BR Circuit Breakers

Product Description

Plug-On Branch Feeder Type Arc Fault Circuit Breakers, Type BR—10 kAIC, 120 Vac and 120/240 Vac

A branch feeder type arc fault circuit interrupter is a device intended to mitigate high current arcing faults in the complete circuit, including connected cords. High current arcing faults can occur from line to neutral or line to ground. These arcing faults are in parallel with the load and produce the most energy of all arcing faults.

The branch feeder type AFCI is required in the 1999 and 2002 National Electrical Code.

The Combination Type AFCI is required in the 2005, 2008, and 2011 National Electrical Code.

Plug-On Combination Type Arc Fault Circuit Breakers, Type BR—10 kAIC, 120 Vac and 120/240 Vac

A combination type arc fault circuit interrupter is a device that includes all of the protection offered by the branch feeder AFCI (mitigation of high current arcing faults in the complete circuit, including connected cords). In addition it provides direct detection of persistent low current arcing faults down to 5 amps with associated mitigation of fire hazards in the cords connected to the outlets. High current arcing faults can occur from line to neutral or line to ground. These arcing faults are in parallel with the load and produce the most energy of all arcing faults. The current level of low current arcing faults is limited by the load.

Plug-On Ground Fault Circuit Breakers, Type GFCB and GFEP—10/22 kAIC, 120 Vac and 120/240 Vac

Ground Fault Application Notes

Single-pole GFCBs are designed for use in two-wire, 120 Vac circuits. See **Page V1-T1-87** for a typical wiring configuration.

Two-pole GFCBs are designed for use in three-wire, 120/240 Vac circuits, 120 Vac multiwire circuits employing common, neutral and two-wire, 240 Vac circuits obtained from a 120/240 Vac source.

Page V1-T1-87 shows typical wiring configurations for a 120/240 Vac multiwire circuits, and a 240 Vac, two-wire circuit. Note the "panel neutral" conductor connects to the neutral bar, even though the neutral is not included in the load circuit. This connection is necessary to supply a 120 Vac power source to the ground fault sensing circuit.

The figures are shown with a 120/240 Vac, single-phase, three-wire power source, but are also applicable to a 120/208 Vac, three-phase, four-wire power supply. For all figures, the electrical operation of the GFCB is not affected by the equipment ground.

Non-CTL Plug-On Replacement —Circuit Breakers, Type BRD—10 kAIC, 120/240 Vac

Non-CTL 10 kAIC for Replacement Purposes Only

For replacement in enclosures manufactured prior to 1968 with unnotched stabs. Circuit breakers do not have rejection tab.

Product Selection

Plug-On Circuit Breakers, Types BR—10/22/42 kAIC, 120 Vac, 120/240 Vac and 240 Vac

BR120

BR215

BR320

BRH2100

BRX2125

Type BR Breakers, 1-Inch (25.4 mm) per Pole 120/240, 10, 22 and 42 kAIC

		Single-Pole 120/240 Vac Requires One 1-Inch (25.4 mm) Space		Two-Pole 120/240 Vac Common Trip Requires Two 1-Inch (25.4 mm) Spaces			
		10 per Shelf Carton		5 per Shelf Carton			
		10 kAIC	22 kAIC	10 kAIC	22 kAIC	42 kAIC	65 kAIC
Ampere Rating	Wire Size Range Cu/Al 60 °C or 75 °C	Catalog Number	Catalog Number	Catalog Number	Catalog Number	Catalog Number	Catalog Number
10	#14–4	**BR110**	—	**BR210**	—	—	—
15	#14–4	**BR115** ①②	**BRH115**	**BR215** ③	**BRH215**	—	—
20	#14–4	**BR120** ①②	**BRH120**	**BR220** ③	**BRH220**	—	—
25	#14–4	**BR125**	**BRH125**	**BR225** ③	**BRH225**	—	—
30	#14–4	**BR130**	**BRH130**	**BR230** ③	**BRH230**	—	—
35	#14–4	**BR135**	**BRH135**	**BR235** ③	**BRH235**	—	—
40	#14–4	**BR140**	**BRH140**	**BR240** ③	**BRH240** ③	—	—
45	#14–4	—	**BRH145**	**BR245** ③	**BRH245**	—	—
50	#14–4	**BR150**	**BRH150**	**BR250** ③	**BRH250** ③	—	—
55	#14–3	**BR150**	**BRH155**	**BR255**	**BRH255**	—	—
60	#8–1/0	**BR160**	**BRH160**	**BR260**	**BRH260**	**BRHH260**	**BRX260**
70	#8–1/0	**BR170**	**BRH170**	**BR270**	**BRH270**	**BRHH270**	**BRX270**
80	#8–1/0	—	—	**BR280**	**BRH280**	**BRHH280**	**BRX280**
90	#8–1/0	—	—	**BR290**	**BRH290**	**BRHH290**	**BRX290**
100	#8–1/0	—	—	**BR2100**	**BRH2100**	**BRHH2100**	**BRX2100**
110	#8–1/0	—	—	**BR2110**	**BRH2110**	**BRHH2110**	**BRX2110**
125	#4–2/0	—	—	**BR2125**	**BRH2125**	**BRHH2125**	**BRX2125**
150	#4–2/0	—	—	**BR2150** ④	—	—	—

Notes

① One pole, 1-inch (25.4 mm) per pole circuit breakers are available with high magnetic setting for switching large tungsten lamp loads. Add suffix H to catalog number.
② Switching duty rated.
③ On the black handle breaker, add suffix "B" to the catalog number to obtain a tapped molded opening for proper use with hold-down kits.
④ For use as a branch circuit breaker in 400 and 600 ampere panels only.

All Type BR single-, two- and three-pole circuit breakers carry listing for HACR application. For circuit breakers with a shunt trip, add ST suffix.

1

BR Breakers

Type BR Breakers, 1-Inch (25.4 mm) per Pole 240 Vac, 10, 22 and 42 kAIC

Ampere Rating	Wire Size Range Cu/Al 60 °C or 75 °C	Three-Pole 240 Vac Common Trip Requires Three 1-Inch (25.4 mm) Spaces 5 per Shelf Carton 10 kAIC Catalog Number	 22 kAIC Catalog Number
10	#14–4	**BR310**	—
15	#14–4	**BR315** ①	**BRH315**
20	#14–4	**BR320** ①	**BRH320**
25	#14–4	**BR325**	**BRH325**
30	#14–4	**BR330**	**BRH330**
35	#14–4	**BR335**	**BRH335**
40	#14–4	**BR340**	**BRH340**
45	#14–4	**BR345**	**BRH345**
50	#14–4	**BR350**	**BRH350**
55	#14–3	**BR355**	**BRH355**
60	#4–1/0	**BR360**	**BRH360**
70	#4–1/0	**BR370**	**BRH370**
80	#4–1/0	**BR380**	**BRH380**
90	#4–1/0	**BR390**	**BRH390**
100	#4–1/0	**BR3100**	**BRH3100**

Plug-On Branch Feeder Type Arc Fault Circuit Breakers, Type BR—10 kAIC, 120 Vac and 120/240 Vac

Type BR AFCI Circuit Breaker

Type BR, 1-Inch (25.4 mm) Wide FIRE-GUARD AFCI Circuit Breakers

Poles	Ampere Rating	Configuration	Catalog Number
Single-pole 10 kAIC	15	AFCI	**BR115AF** ②
	20	AFCI	**BR120AF** ②
Single-pole 22 kAIC	15	AFCI	**BRH115AF**
	20	AFCI	**BRH120AF**
Two-pole 10 kAIC ③④	15	AFCI Common Trip	**BRL215AF**
	20	AFCI Common Trip	**BRL220AF**

Notes

① One pole, 1-inch (25.4 mm) per pole circuit breakers are available with high magnetic setting for switching large tungsten lamp loads. Add suffix H to catalog number.

② Clamshell packaging available with CS modification code on the end of catalog number.

③ Common trip refers to two-pole 240 V load application sourced by 120/240 Vac (see **Page V1-T1-87**).

④ Independent trip refers to two-pole multi-wire, home run or shared neutral circuits (see **Pages V1-T1-87** and **V1-T1-88**).

All Type BR single-, two- and three-pole circuit breakers carry listing for HACR application. For circuit breakers with a shunt trip, add ST suffix.

Plug-On, Dual Purpose Arc Fault/ Ground Fault Circuit Breakers, Type BR—10 kAIC, 120 Vac

BRLAFGF115

Type BR, 1-Inch (25.4 mm) wide Dual Purpose AF/GF Circuit Breakers ①②

Poles	Ampere Rating	Configuration	Catalog Number
Single-pole 10 kAIC	15	Combination AFCI GFCI	**BRLAFGF115**
	20	Combination AFCI GFCI	**BRLAFGF120**

Plug-On Combination Type Arc Fault Circuit Breakers, Type BR—10 kAIC, 120 Vac and 120/240 Vac

BRCAF115

Type BR, 1-Inch (25.4 mm) wide FIRE-GUARD Combination Type AFCI Circuit Breakers

Poles	Ampere Rating	Configuration	Catalog Number
Single-pole 10 kAIC	15	AFCI	**BRCAF115** ③
		Diagnostic AFCI	**BRACAF115**
	20	AFCI	**BRCAF120** ③
		Diagnostic AFCI	**BRACAF120**
Single-pole 22 kAIC	15	AFCI	**BRHCAF115** ③
	20	AFCI	**BRHCAF120** ③
Two-pole 10 kAIC	15	AFCI	**BRL215CAF**
	20	AFCI	**BRL220CAF**

Plug-On Ground Fault Circuit Breakers, Type GFCB and GFEP—10/22 kAIC, 120 Vac and 120/240 Vac

Type GFCB Single-Pole

Type GFCB Two-Pole

Type GFCB Ground Fault Circuit Breakers—5 Milliampere—1-Inch (25.4 mm) per Pole 120 Vac or 120/240 Vac, 10 kAIC

Ampere Rating	Wire Size Range Cu/Al 60 °C or 75 °C	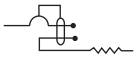 Single-Pole 120 Vac Requires One 1-Inch (25.4 mm) Space 1 per Shelf Carton Catalog Number ④	Two-Pole 120/240 Vac Common Trip Requires Two 1-Inch (25.4 mm) Spaces 1 per Shelf Carton Catalog Number
15	#14–4	**GFCB115**	**GFCB215**
20	#14–4	**GFCB120**	**GFCB220**
25	#14–4	**GFCB125**	**GFCB225**
30	#14–4	**GFCB130**	**GFCB230**
40	#14–4	**GFCB140**	**GFCB240**
50	#14–4	—	**GFCB250** ⑤
60	#14–6	—	**GFCB260**

Notes

① Breaker qualifies as combination arc fault, per UL 1699.
② Breaker qualifies as personnel protection ground fault, (5 mA) per UL 943.
③ Clamshell packaging available with CS modification code on the end of catalog number.
④ Available with bell alarm or auxiliary switch. See circuit breaker accessories on **Page V1-T1-85**.
⑤ For use with copper wire only.

Type GFCBH Ground Fault Breakers—5 Milliampere—1-Inch (25.4 mm) per Pole 120 Vac or 120/240 Vac, 22 kAIC

Ampere Rating	Wire Size Range Cu/Al 60 °C or 75 °C	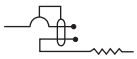 Single-Pole 120 Vac Requires One 1-Inch (25.4 mm) Space 1 per Shelf Carton Catalog Number	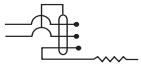 Two-Pole 120/240 Vac Common Trip Requires Two 1-Inch (25.4 mm) Spaces 1 per Shelf Carton Catalog Number
15	#14–4	**GFCBH115**	**GFCBH215**
20	#14–4	**GFCBH120**	**GFCBH220**
25	#14–4	**GFCBH125**	**GFCBH225**
30	#14–4	**GFCBH130**	**GFCBH230**

Type GFEP Ground Fault Equipment Protectors—30 Milliampere—1-Inch (25.4 mm) per Pole 120 Vac or 120/240 Vac, 10 kAIC

Ampere Rating	Wire Size Range Cu/Al 60 °C or 75 °C	Single-Pole 120 Vac Requires One 1-Inch (25.4 mm) Space 1 per Shelf Carton Catalog Number	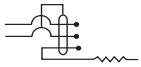 Two-Pole 120/240 Vac Common Trip Requires Two 1-Inch (25.4 mm) Space 1 per Shelf Carton Catalog Number
15	#14–4	**GFEP115**	**GFEP215**
20	#14–4	**GFEP120**	**GFEP220**
25	#14–4	**GFEP125**	**GFEP225**
30	#14–4	**GFEP130**	**GFEP230**
40	#14–4	—	**GFEP240**
50	#14–4	—	**GFEP250** ①

Note

① For use with copper wire only.

CTL Plug-On Circuit Breakers, Type BD Duplex, BQ and BQC Quadplex—10 kAIC, 120/240 Vac

BD2020

BQ2302115

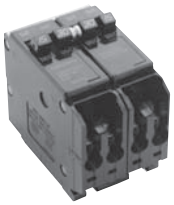

BQ230230

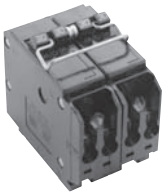

Class CTL, 1-Inch (25.4 mm) per Pole 10 kAIC—All Circuit Breakers Have Rejection Tab Feature

Type BD Duplex (UL Type BRD)			Type BQ Quadplex Independent Trip (UL Type BRD)				Type BQ Quadplex Independent Trip (UL Type BRD)		
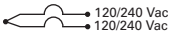			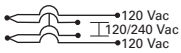				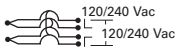		
Single-Pole ① **Requires One 1-Inch (25.4 mm) Space** **10 per Shelf Carton**			**Two-Pole ② and Single-Pole ①** **Requires Two 1-Inch (25.4 mm) Spaces** **5 per Shelf Carton**				**Two-Pole** **Requires Two 1-Inch (25.4 mm) Spaces** **5 per Shelf Carton**		
	120 Vac	**Wire Size Range**	**120 Vac**	**120/240 Vac**	**120 Vac**		**120/240 Vac**		
			Ampere Rating				**Ampere Rating**		
Ampere Rating	**Catalog Number**	**Cu/Al 65 °C or 75 °C**	**Outer Left Single-Pole**	**Center Two-Pole Independent Trip**	**Outer Right Single-Pole**	**Catalog Number**	**Outer Two-Pole Independent Trip**	**Center Two-Pole Independent Trip**	**Catalog Number**
10–10	**BD1010**	#14–4	15	20	15	**BQ2202115**	15	15	**BQ215215**
15–15	**BD1515**	#14–4	20	20	20	**BQ2202120**	15	20	**BQ215220**
15–20	**BD1520**	#14–4	15	30	15	**BQ2302115**	15	30	**BQ215230**
15–30	**BD1530**	#14–4	20	30	20	**BQ2302120**	15	40	**BQ215240**
20–15	**BD2015**	#14–4	15	40	15	**BQ2402115**	15	50	**BQ215250**
20–20	**BD2020**	#14–4	20	40	20	**BQ2402120**	20	20	**BQ220220**
20–30	**BD2030**	#14–4	15	50	15	**BQ2502115**	20	30	**BQ220230**
25–25	**BD2525**	#14–4	20	50	20	**BQ2502120**	20	40	**BQ220240**
30–15	**BD3015**	#14–4	—	—	—	**—**	20	50	**BQ220250**
30–20	**BD3020**	#14–4	—	—	—	**—**	25	25	**BQ225225**
30–30	**BD3030**	#14–4	—	—	—	**—**	30	30	**BQ230230**
30–40	**BD3040**	#14–4	—	—	—	**—**	30	40	**BQ230240**
30–50	**BD3050**	#14–4	—	—	—	**—**	30	50	**BQ230250**
50–30	**BD5030**	#14–4	—	—	—	**—**	40	40	**BQ240240**
50–50	**BD5050**	#14–4	—	—	—	**—**	40	50	**BQ240250**
—	**—**	—	—	—	—	**—**	50	50	**BQ250250**

Notes

① All 15 and 20 A single poles are switch-duty rated.

② All Type BD duplex and BQ quadplex circuit breakers carry listing for HACR applications.

1

Non-CTL Plug-On Replacement—Circuit Breakers, Type BRD—10 kAIC, 120/240 Vac

BR2020

Class Non-CTL, 1-Inch (25.4 mm) per Pole 10 kAIC—Breakers Do Not Have Rejection Tab Feature

Type BR Duplex			Type Brand BRD Quadplex Independent Trip			Type BRD Quadplex Common Trip Center and Outer Poles		
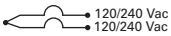			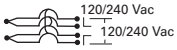			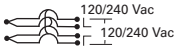		
Single-Pole Requires One 1-Inch (25.4 mm) Space 10 per Shelf Carton			**Two-Pole Requires Two 1-Inch (25.4 mm) Spaces 5 per Shelf Carton**			**Two-Pole Requires Two 1-Inch (25.4 mm) Spaces 5 per Shelf Carton**		
	120 Vac		**120/240 Vac**	**120/240 Vac**		**120/240 Vac**		
		Wire Size Range	**Ampere Rating**			**Ampere Rating**		
Ampere Rating	**Catalog Number**	**Cu/Al 65 °C or 75 °C**	**Outer Two-Pole Independent Trip**	**Center Two-Pole Independent Trip**	**Catalog Number**	**Outer Two-Pole Common Trip**	**Center Two-Pole Common Trip**	**Catalog Number**
15–15	**BR1515**	#14–4	15	15	**BR415**	15	15	**BRDC215215**
15–20	**BR1520**	#14–4	20	20	**BR420**	30	30	**BRDC230230**
20–15	**BR2015**	#14–4	30	30	**BR430**	30	40	**BRDC230240**
20–20	**BR2020**	#14–4	20	30	**BRD220230**	30	50	**BRDC230250**
30–30	**BR3030**	#14–4	30	40	**BRD230240**	—	—	—
30–50	**BR3050**	#14–4	30	50	**BRD230250**	—	—	—

CTL and Non-CTL Breakers

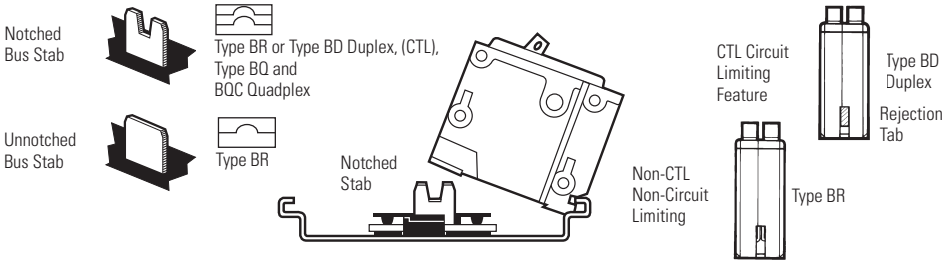

Note

Type BD Duplex, BQ and BQC Quadplex circuit breakers can be installed in Circuit Limiting (CTL) listed BR loadcenters. Type BR twin breakers can be installed in Non-CTL BR loadcenters.

Common Trip Quadplex Breakers

BQC2302115

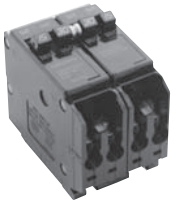

BQC2302115

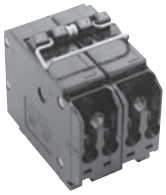

Class CTL, 1-Inch (25.4 mm) per Pole 10 kAIC—All Circuit Breakers Have Rejection Tab Feature

Type BQC Quadplex Common Trip Center Poles (UL Type BRD)

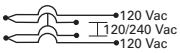

Two-Pole ① and Single-Pole ②
Requires Two 1-Inch (25.4 mm) Spaces
5 per Shelf Carton

Type BQC Quadplex Common Trip Center and Outer Poles (UL Type BRD)

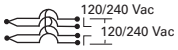

Two-Pole ①
Requires Two 1-Inch (25.4 mm) Spaces
5 per Shelf Carton

120 Vac Ampere Rating Outer Left Single-Pole	120/240 Vac Center Two-Pole Common Trip	120 Vac Outer Right Single-Pole	Catalog Number	Wire Size Range Cu/Al 65 °C or 75 °C	120/240 Vac Ampere Rating Outer Two-Pole Common Trip	Center Two-Pole Common Trip	Catalog Number
15	20	15	**BQC2202115**	#14–4	15	15	**BQC215215**
15	25	15	**BQC2252115**	#14–4	15	20	**BQC215220**
15	30	15	**BQC2302115**	#14–4	15	30	**BQC215230**
15	40	15	**BQC2402115**	#14–4	20	15	**BQC220215**
15	50	15	**BQC2502115**	#14–4	20	20	**BQC220220**
—	—	—	—	#14–4	20	30	**BQC220230**
—	—	—	—	#14–4	20	40	**BQC220240**
—	—	—	—	#14–4	20	50	**BQC220250**
20	15	20	**BQC2152120**	#14–4	25	25	**BQC225225**
20	20	20	**BQC2202120**	#14–4	25	30	**BQC225230**
20	25	20	**BQC2252120**	#14–4	30	15	**BQC230215**
20	30	20	**BQC2302120**	#14–4	30	30	**BQC230230**
20	40	20	**BQC2402120**	#14–4	30	40	**BQC230240**
20	50	20	**BQC2502120**	#14–4	30	50	**BQC230250**
30	50	20	**BQC2502030**	#14–4	40	30	**BQC240230**
—	—	—	—	#14–4	40	40	**BQC240240**
—	—	—	—	#14–4	40	50	**BQC240250**
—	—	—	—	#14–4	50	20	**BQC250220**
—	—	—	—	#14–4	50	50	**BQC250250**

Notes

① All Type BQC quadplex circuit breakers carry listing for HACR applications.
② All 15 and 20 ampere single poles are switch-duty rated.

1

Plug-On Circuit Breakers, Types BJ and BJH—10/22 kAIC, 120/240 Vac and 240 Vac

For Use in Single-Phase and Three-Phase Loadcenters—150 Amperes and Above

Type BJ

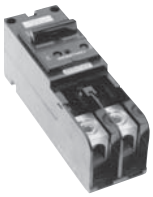

Types BJ and BJH Breakers, 1-Inch (25.4 mm) per Pole, 120/240 or 240 Vac, 10, 22 kAIC

	Two-Pole 120/240 Vac Common Trip Requires Four 1-Inch (25.4 mm) Spaces ① 10 per Shelf Carton			Three-Pole 240 Vac Common Trip Requires Six 1-Inch (25.4 mm) Spaces ② 5 per Shelf Carton	
Ampere Rating	**10 kAIC Catalog Number**	**22 kAIC Catalog Number**	**Wire Size Range Cu/Al 60 °C or 75 °C**	**10 kAIC Catalog Number**	**22 kAIC Catalog Number**
125	**BJ2125**	**BJH2125**	#2–300 kcmil	**BJ3125**	**BJH3125**
150	**BJ2150**	**BJH2150**	#2–300 kcmil	**BJ3150**	**BJH3150**
175	**BJ2175**	**BJH2175**	#2–300 kcmil	**BJ3175**	**BJH3175**
200	**BJ2200**	**BJH2200**	#2–300 kcmil	**BJ3200**	**BJH3200**
225	**BJ2225**	**BJH2225**	#2–300 kcmil	**BJ3225**	**BJH3225**

Plug-On Special Application Circuit Breakers—10 kAIC, 120 Vac, 120/240 Vac and 240 Vac

BRWH215
Water Heater Breaker

BRSN220
Switching Neutral Breaker

Special Application Circuit Breakers, 1-Inch (25.4 mm) per Pole

Water Heater Breakers		Switching Neutral Breakers			240 V Breakers		Non-Automatic Molded Case Switches	
LINE / LOAD		OUT / IN / NEUTRAL						
Two-Pole 120/240 Vac Common Trip Requires Two 1-Inch (25.4 mm) Spaces With Isolated Line Terminals for Separately Metered Water Heaters 5 per Shelf Carton 10 kAIC		Two-Pole 120 Vac Common Trip Requires Two 1-Inch (25.4 mm) Spaces With Switching Neutral Pole for Gasoline Pump Applications 5 per Shelf Carton 10 kAIC			Two-Pole 240 Vac Common Trip Requires Two 1-Inch (25.4 mm) Spaces Where Voltage to Ground is 240 Vac 5 per Shelf Carton 10 kAIC		Two-Pole 240 Vac Requires Two 1-Inch (25.4 mm) Spaces For Use as Disconnect Contains No Magnetic or Thermal Trip Properties 5 per Shelf Carton 5 kAIC	
Ampere Rating	**Catalog Number**	**Ampere Rating**	**Catalog Number**	**Wire Size Range Cu/Al 60 °C or 75 °C**	**Ampere Rating**	**Catalog Number**	**Ampere Rating**	**Catalog Number**
15	**BRWH215**	15	**BRSN215**	#14–4	10	**BR210H**	—	—
20	**BRWH220**	20	**BRSN220**	#14–4	15	**BR215H**	—	—
30	**BRWH230**	25	**BRSN225**	#14–4	20	**BR220H**	—	—
—	—	30	**BRSN230**	#14–4	25	**BR225H**	—	—
—	—	—	—	#14–4	30	**BR230H**	—	—
—	—	—	—	#14–4	35	**BR235H**	—	—
—	—	—	—	#14–4	40	**BR240H**	—	—
—	—	—	—	#14–4	45	**BR245H**	—	—
—	—	—	—	#14–4	50	**BR250H**	50	**BR250NA**
—	—	—	—	#14–4	55	**BR255H**	—	—
—	—	—	—	#4–1/0	60	**BR260H**	60	**BR260NA**
—	—	—	—	#4–1/0	70	**BR270H**	—	—
—	—	—	—	#4–1/0	80	**BR280H**	—	—
—	—	—	—	#4–1/0	90	**BR290H**	—	—
—	—	—	—	#4–1/0	100	**BR2100H**	100	**BR2100NA**

Notes

① Breaker uses two 1-inch (25.4 mm) pole spaces on left side and two 1-inch (25.4 mm) pole spaces on right side of loadcenter.

② Breaker uses three 1-inch (25.4 mm) pole spaces on left side and three 1-inch (25.4 mm) pole spaces on right side of loadcenter.

If BJ or BJH breakers are used as a main or a back feed device, a hold-down kit is required. See **Page V1-T1-85**.

Circuit Breaker Accessories

THS1

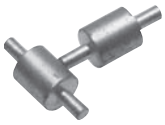

BHLW2

BRQLW

MCBPL (Installed)

BHLW

BRLW2

BREQS125

BRHDK125

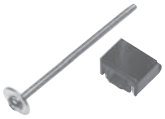

Field Installation Kits and Parts

Description	Ordering Quantity ①	Catalog Number
Handle Ties ②		
Handle tie bar for physically joining the handles of two adjacent single-pole Type BR circuit breakers (metal cylinder pin type)	10	**BHT**
Handle tie bar for joining two independent outside poles of Types BQ and BQC Quadplex and outside poles of two Type BD duplex circuit breakers	10	**THOW**
Handle tie bar for joining two adjacent outside poles of Types BQ and BQC Quadplex and outside poles of two Type BD duplex circuit breakers	10	**THS1**
Handle Lockoffs ③④		
Padlockable device for locking the handle of single-, two- or three-pole Type BR Circuit Breakers and single-pole of a Type BD Duplex or one independent outside pole of a Type BQ or BQC Quadplex circuit breakers (escutcheon mounted) ⑤	10	**BRLW**
Padlockable device for locking the handle of a single-pole Type BR circuit breaker (handle mounted) ⑥	10	**BRLW1**
Padlockable device for locking the handle of a two- and three-pole Type BR circuit breaker (handle mounted) ⑥	10	**BRLW2**
Padlockable device for locking the handle of a single-pole Type BD Duplex, BQ or BQC Quadplex breaker (handle mounted) ⑥	10	**BRDL1**
Padlockable device for locking the handle of the two center poles and the two outer poles of a two-pole Types BQ and BQC quadplex circuit breakers (escutcheon mounted) ⑤	10	**BRQLW**
Padlockable device for locking the handle of main circuit breaker Types CC and CHH into the ON or OFF position (screw mounted) ⑦	1	**CCPL**
Padlockable device for locking the handle of main breaker Types BW and CSR into the ON or OFF position (escutcheon mounted) ⑤	1	**MCBPL**
Device used to secure handle in ON or OFF position for single-, two- or three-pole Type BR circuit breakers and single-pole of Type BD duplex and one independent outside pole of Type BQ or BQC Quadplex circuit breakers (escutcheon mounted) ⑤	10	**BHLW**
Device used to secure handle in ON or OFF position for single-pole Type BR circuit breakers (handle mounted) ⑥	10	**BHLW1**
Device used to secure handle in ON or OFF position for two- and three-pole Type BR circuit breakers (handle mounted) ⑥	10	**BHLW2**
Device used to secure handle in ON or OFF position for single-pole Type GFCB ground fault circuit breakers (handle mounted) ⑥	10	**BHGW**
Device used to secure handle in ON or OFF position for one independent outside pole of Types BQ and BQC Quadplex or single-pole Type BD duplex circuit breakers (handle mounted) ⑥	10	**HLW1**
Hold-Down Kits ⑧		
Hold-down retainer kit for three-pole Type BR circuit breakers in S3100 and 3100R loadcenters only	1	**BRHDB**
Hold-down screw kit for two- and three-pole Type BR circuit breakers in single-phase MLO loadcenters through 100–125 A	1	**BREQS125**
Hold-down screw kit for two- and three-pole Type BR circuit breakers in MLO loadcenters 150–225 A	1	**BRHDK125**
Hold-down screw kit for two-pole Types BJ and BJH circuit breakers in MLO loadcenters 125–225 A	1	**BJHDS**
Hold-down screw kit for three-pole Types BJ and BJH circuit breakers in MLO loadcenters 125–225 A	1	**BJHDS3P**
Main Breaker Lug Kits		
Types CC and CHH main breaker lug kit (2) 300 kcmil	1	**CCL300**
Types BW/CSR main breaker lug kit (2) 300 kcmil	1	**MCBL300**

Notes

① Must be purchased in multiples of ordering quantities indicated.
② Handle ties: typically used to join two similar independent single-pole breakers to form a two-pole noncommon trip breaker.
③ Handle lockoffs: devices that use a padlock to lock the circuit breaker's handle in the ON or OFF position.
④ See table on **Page V1-T1-86** for handle position changeability chart.
⑤ Escutcheon mounted: device mounted semipermanently to the face of the circuit breaker and secured by the loadcenter deadfront.
⑥ Handle mounted: device mounted directly to the handle by the use of a set screw.
⑦ Screw mounted: device permanently mounted to the face of the circuit breaker by the use of a non-removable screw.
⑧ Hold-down kits: devices used to secure the circuit breaker to the loadcenter for back-feed main application. See NEC Article 384.16(g). Add "B" suffix to two-pole breaker for tapped hole for hold-down kit (ex. BR230B) for BR breakers below 60 A.

BRML

Field Installation Kits and Parts, continued

Description	Ordering Quantity ①	Catalog Number
Mechanical Interlocks		
Types BR for two-, three- and four-pole breakers	10	**BRML**
Padlock Brackets		
BR padlock mounting bracket	10	**BRPLOFF**
BR three-pole lock-off bracket	10	**BRPLOFF3P**
BJ two-pole lock-off bracket	10	**BJL2P**
BJ three-pole lock-off bracket	10	**BJL3P**

Shunt Trips, Auxiliary and Alarm Contacts

Description	Catalog Number ② Suffix Adder
Shunt Trip for Types BW/CSR	
12 Volts	**SR12**
24 Volts	**SR24**
120 Volts	**SR01**
Shunt Trip for Types BR	
120 Volts	**ST**
Auxiliary Contact for Types BW/CSR	
1NO and 1NC	**AL1**
2NO and 2NC	**AL2**
Alarm Contacts for Types BW/CSR	
Types BW/CSR	**CR1**
Alarm Contacts for Type GFCB (Single-Pole)	
Alarm contact for GFCB (single-pole)	**W1**
1NO and 1NC	**W2**

Handle Position Changeability Chart

	To Change Handle Position from ON to OFF, or OFF to ON You Must...		
Handle Lockoff and Lockdog Types	**Remove Padlock**	**Remove Device**	**Remove Loadcenter Deadfront**
Lockoff escutcheon mounted	Remove	—	—
Lockoff handle mounted	Remove	Remove	—
Lockoff screw mounted	Remove	—	—
Lockdog escutcheon mounted	N/A	Remove	Remove
Lockdog handle mounted	N/A	Remove	—

Notes

① Must be purchased in multiples of ordering quantities indicated.

② Add suffix indicated to end of breaker catalog number.

Wiring Diagrams

Single-Pole 120 V Load Application Sourced by 120/240 Vac

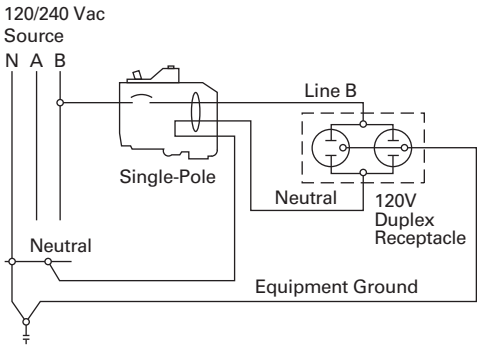

Two-Pole Shared Neutral with Duplex Receptacle Application

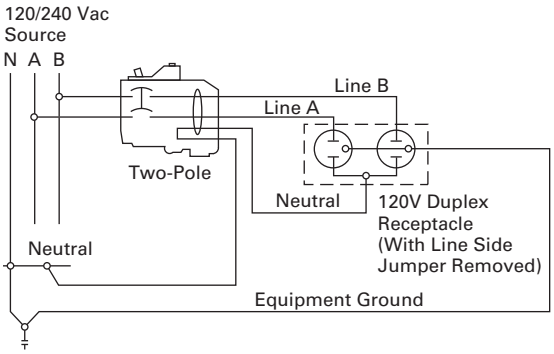

Two-Pole Shared Neutral with Multi-Duplex Receptacle Application

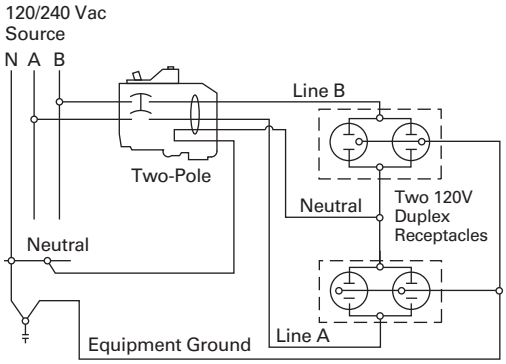

Single-Pole 120 V Load Application Sourced by 120/240 Vac

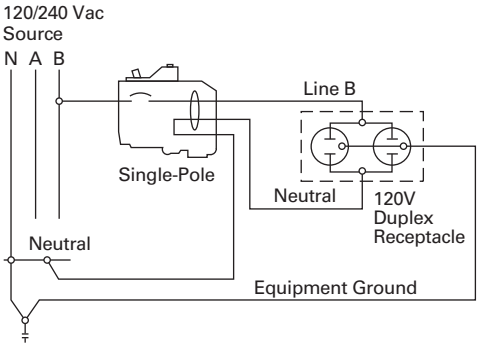

Two-Pole 240 V Load Application Sourced by 120/240 Vac

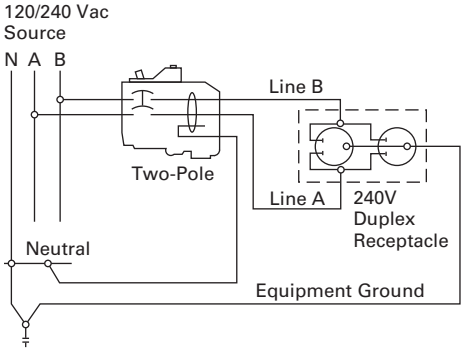

Single-Pole 120 V Duplex Receptacle Application

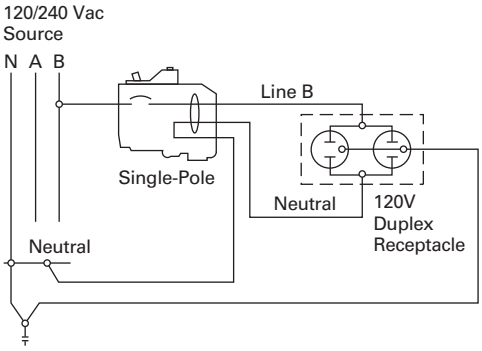

Two-Pole 120 V Multi-Duplex Receptacle Application

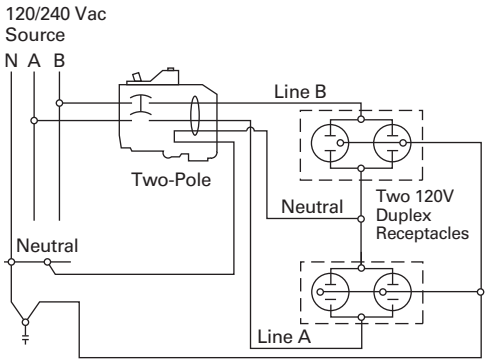

Two-Pole 120 V Duplex Receptacle Application

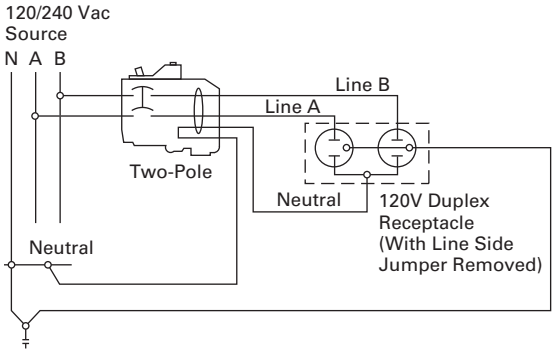

Two-Pole 240 V Duplex Receptacle Application

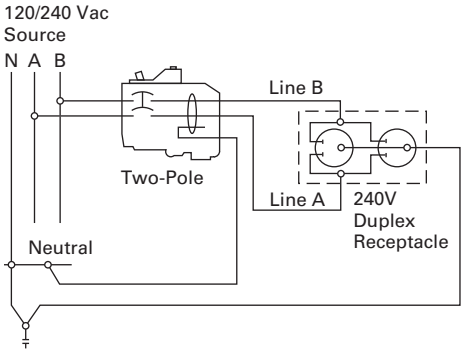

OEM Loadcenters

Contents

Description	*Page*
Standards and Certifications	**V1-T1-90**
Product Selection	**V1-T1-90**

Product Description

As a leader in the electrical distribution equipment business, Eaton has a unique product offering for equipment manufacturers, panel builders and virtually any OEM that has a need for power distribution within their equipment. The OEM interior offering consists of a wide variety of power distribution options utilizing components from Eaton's CH and BR loadcenter product lines. With high-volume, standardized products, OEMs can expect to receive high-quality products covering configurations meeting virtually any power distribution need.

Coupled with Eaton's expertise in circuit breaker design and manufacturing, OEM interiors provide solid power distribution and circuit protection in a compact, easy-to-install package. Interiors are offered from 2 to 42 circuits and from 70 to 225 A.

Quality

Built in ISO 9002 certified manufacturing facilities, customers can be assured of the process quality in place for the manufacture of these products. Utilizing the latest in computer-controlled plating, painting, molding, stamping and welding processes, Eaton's customers have come to expect consistent high-quality from shipment to shipment.

Two Products Offer Design Flexibility

As a manufacturer of two lines of loadcenters, Eaton is in a unique position to offer the broadest range of interiors in the market. Each line has its own unique characteristics that appeal to various segments of the market. OEM interiors are UL recognized components and are listed in either of the following UL files: E8741 or E52977.

The CH interiors feature 100% copper bus and use the CH 3/4-inch (19.1 mm) wide circuit breaker, which minimizes panel space. Recognized by contractors for its sturdy design, the CH interior will appeal to those customers seeking an industrial quality bolted busbar and the space saving of 3/4-inch (19.1 mm) per bus stab. With a typical 12 circuit CH interior, this space savings amounts to an inch and a half savings over its 1-inch (25.4 mm) counterparts. The stab rating of the CH interiors is 140 A maximum meaning that the handle rating of breakers mounted across from one another may not exceed 140 A.

The BR interiors are manufactured of formed, plated aluminum or copper, and use Eaton's Type BR 1-inch (25.4 mm) wide circuit breaker. This design affords customers the most circuit flexibility as many of these interiors allow the installation of standard single- and two-pole breakers as well as duplex (two poles in a 1-inch (25.4 mm) space) or quadplex (four poles in a 2-inch (50.8 mm) space) breakers.

The stab rating of the BR interiors is 200 A maximum, meaning that the handle rating of the breakers that are mounted across from one another may not exceed 200 A.

The interiors are designed for either horizontal (single-row breaker mounting), or vertical (double-row breaker mounting). To comply with National Electrical Code (NEC) requirements, if mounted horizontally, when the breaker is ON, the handle should be in the UP position. When mounted vertically, the handle toggles from left to right, so this is not a concern.

Standards and Certifications

Class CTL

National Electrical Code Paragraph 384.15 requires branch circuit panelboards to be provided with physical means to prevent the installation of more overcurrent devices than that number of which the enclosure was designed, rated and approved. Class CTL Duplex, Quadplex and twin breakers (identified by a catalog number prefix BD, BQ, BQC and CHT) are equipped with a UL listed rejection tab over the line terminal. All OEM interiors have appropriately notched stabs to accept these rejection tab Class CTL breakers.

Duplex, Quadplex and twin breakers manufactured without the rejection tab (identified by a catalog number prefix BR, BRD and CHT) are available for replacement purposes in older interiors.

Federal Specifications

All loadcenter enclosures meet Federal Specifications W-P-115b, Type 1, Class 2 requirements.

All 120/240 V breakers, both 1-inch (25.4 mm), 1/2-inch (12.7 mm) and 3/4-inch (19.1 mm) per pole meet the requirement of Federal Specifications W-C 375B/Gen Type 1.

Canadian Standards Association Listing

All single-pole and two-pole, 120/240 V breakers, both 1-inch (25.4 mm), 1/2-inch (12.7 mm) and 3/4-inch (19.1 mm) per pole, 225 A maximum, are listed as Certified by the Canadian Standards Association, Guide No. 69-11.19, Class 1432, File 18328.

Underwriters Laboratories Listing

All grounding bars manufactured comply with Underwriters Laboratories standards and are listed under Guide No. DHJR, File E31424, Volume W, Section 17.

All circuit breakers 10 A and larger comply with the Underwriters Laboratories "Standard for Branch Circuit and Service Circuit-Breakers" UL 489; Guide No. 60 10.2 File E31424, and "Requirements for Wire Connectors and Soldering Lugs," UL 486B, Guide No. 461 10-C File E7830.

All Eaton breakers where marked, are suitable for use with 60/75 °C rated wire, unless otherwise specified.

All devices comply with the 22 kAIC–10 kAIC UL series connected components File DKSY2 of the Recognized Components Index.

Lighting and Appliance Panelboards

Lighting and appliance branch circuit panelboards are defined in NEC (Article 384) as "One having more than 10 percent of its overcurrent devices rated 30 A or less for which neutral connections are provided." Article 384 also limits the number of overcurrent devices (branch circuit poles) to a maximum of 42 in any one cabinet. When the 42 poles are exceeded, two or more separate panels are required.

For more details and engineering drawings, see BR.31.02.S.E.

Listed

Product Selection

Type CH Loadcenter Interior Assemblies—Copper Bus

Ampere Rating	Maximum Number 1-Inch (24.5 mm) Spaces	Single Poles	UL File Reference	Main Terminal Size (Per Phase)	Standard Package Quantity	Catalog Number
Single-Phase Single Row Breaker Mounting—120/240 Vac, Three-Wire						
70	2	2	E8741	(1) #8–#2 AWG Cu/Al	1	**CH9MB270**
125	2	2	E8741	(1) 2/0–#6 AWG Cu/Al	20	**CH2L125INT**
Single-Phase Double Row Breaker Mounting—120/240 Vac, Three-Wire						
125	4	4	E8741	(1) 2/0–#14 AWG Cu/Al	20	**CH4L125INT**
125	8	8	E8741	(1) 2/0–#6 AWG Cu/Al	20	**CH8L125INT**
125	12	12	E8741	(1) 2/0–#6 AWG Cu/Al	20	**CH12L125INT**
125	16	16	E8741	(1) 2/0–#6 AWG Cu/Al	20	**CH16L125INT**
200	12	12	E8741	(1) 300 kcmil–#4 AWG Cu/Al	20	**CH12L200INT**
200	16	16	E8741	(1) 300 kcmil–#4 AWG Cu/Al	10	**CH16L200INT**
225	24	24	E8741	(1) 300 kcmil–#4 AWG Cu/Al	10	**CH24L225INT**
225	32	32	E8741	(1) 300 kcmil–#4 AWG Cu/Al	10	**CH32L225INT**
225	42	42	E8741	(1) 300 kcmil–#4 AWG Cu/Al	10	**CH42L225INT**
Three-Phase Double Row Breaker Mounting—208Y/120 Vac, Four-Wire—240 Vac, Three-Wire—120/240 Vac, Four-Wire Delta						
125	12	12	E8741	(1) 2/0–#6 AWG Cu/Al	10	**CH12L3125INT**
125	18	18	E8741	(1) 2/0–#6 AWG Cu/Al	10	**CH18L3125INT**
125	24	24	E8741	(1) 2/0–#6 AWG Cu/Al	10	**CH24L3125INT**
225	24	24	E8741	(1) 300 kcmil–#4 AWG Cu/Al	10	**CH24L3225INT**
225	30	30	E8741	(1) 300 kcmil–#4 AWG Cu/Al	10	**CH30L3225INT**
225	42	42	E8741	(1) 300 kcmil–#4 AWG Cu/Al	10	**CH42L3225INT**

BR Loadcenter Interior Assembly

Type BR Loadcenter Interior Assemblies—Aluminum Bus

Ampere Rating	Maximum Number 1-Inch (24.5 mm) Spaces	Single Poles	UL File Reference	Main Terminal Size (Per Phase)	Standard Package Quantity	Catalog Number
Single-Phase Single Row Breaker Mounting—120/240 Vac, Three-Wire						
70	2	4	E8741	(1) #8–#2 AWG Cu/Al	20	**24INT70B**
125	2	4	E8741	(1) 1/0–#14 AWG Cu 2/0–12 AWG Al	20	**24INT125B**
125	6	12	E52977	(1) 2/0–#14 AWG Cu/Al	20	**612INT125SRB**
Single-Phase Double Row Breaker Mounting—120/240 Vac, Three-Wire						
125	4	8	E8741	(1) 2/0–#14 AWG Cu/Al	20	**48INT125B**
125	6	12	E8741	(1) 2/0–#14 AWG Cu/Al	20	**612INT125B**
125	8	16	E8741	(1) 2/0–#14 AWG Cu/Al	20	**816INT125B**
125	12	12	E52977	(1) 2/0–#14 AWG Cu/Al	20	**1212INT125B**
125	12	24	E52977	(1) 2/0–#14 AWG Cu/Al	20	**1224INT125B**
125	16	24	E52977	(1) 2/0–#14 AWG Cu/Al	20	**1624INT125B**
125	20	24	E52977	(1) 2/0–#14 AWG Cu/Al	10	**2024INT125B**
125	24	24	E52977	(1) 2/0–#14 AWG Cu/Al	10	**2424INT125B**
200	8	16	E52977	(1) 300 kcmil–#1 AWG Cu/Al	20	**816INT200B**
200	12	24	E52977	(1) 300 kcmil–#1 AWG Cu/Al	20	**1224INT200B**
200	30	40	E52977	(1) 300 kcmil–#1 AWG Cu/Al	10	**3040INT200B**
225	42	42	E52977	(1) 300 kcmil–#1 AWG Cu/Al	10	**4242INT225B**
Three-Phase Double Row Breaker Mounting—208Y/120 Vac, Four-Wire—240 Vac, Three-Wire—120/240 Vac, Four-Wire Delta						
125	12	24	E52977	(1) 2/0–#8 AWG Cu/Al	10	**1224INT3125B**
150	18	36	E52977	(1) 300 kcmil–#2 AWG Cu/Al	10	**1836INT3150B**
150	24	42	E52977	(1) 300 kcmil–#2 AWG Cu/Al	10	**2442INT3150B**
200	30	42	E52977	(1) 300 kcmil–#2 AWG Cu/Al	10	**3042INT3200B**
225	42	42	E52977	(1) 300 kcmil–#2 AWG Cu/Al	10	**4242INT3225B**

Type BR Loadcenter Interior Assemblies—Copper Bus

Ampere Rating	Maximum Number 1-Inch (24.5 mm) Spaces	Single Poles	UL File Reference	Main Terminal Size (Per Phase)	Standard Package Quantity	Catalog Number
Single-Phase Double Row Breaker Mounting—120/240 Vac, Three-Wire						
125	8	16	E5297	(1) 2/0–#14 AWG Cu/Al	20	**816INT125BC**
125	12	12	E5297	(1) 2/0–#14 AWG Cu/Al	20	**1212INT125BC**
200	12	24	E5297	(1) 300 kcmil–#1 AWG Cu/Al	20	**1224INT200BC**
Three-Phase Double Row Breaker Mounting—208Y/120 Vac, Four-Wire—240 Vac, Three-Wire—120/240 Vac, Four-Wire Delta						
125	12	24	E52977	(1) 2/0–#8 AWG Cu/Al	10	**1224INT3125BC**
200	12	24	E52977	(1) 300 kcmil–#2 AWG Cu/Al	10	**1224INT3200BC**

Neutral Assemblies

Ampere Rating	UL File Rating	Main Incoming Terminal Wire Size Range 60 °C or 75 °C	Number of Terminals #14–4 AWG Cu/Al	Number of Terminals #6–1/0 AWG Cu #6–2/0 AWG Al	Standard Package Quantity	Figure	Dimensions–Inches (mm) Overall Length A	Dimensions–Inches (mm) Mounting B	Catalog Number
125	E52977	#6–1/0 AWG Cu #6–2/0 AWG Al	10	—	20	1	5.938 (150.83)	5.400 (137.16)	**10NEU125B**
125	E52977	#6–1/0 AWG Cu #6–2/0 AWG Al	17	—	20	1	8.388 (213.06)	7.850 (199.40)	**17NEU125B**
125	E52977	#6–1/0 AWG Cu #6–2/0 AWG Al	20	—	20	1	9.438 (239.73)	8.900 (226.06)	**20NEU125B**
225	E52977	#1–300 kcmil Cu/Al	24	1	20	2	10.913 (277.19)	10.300 (261.62)	**24NEU225B**
225	E52977	#1–300 kcmil Cu/Al	35	1	20	2	15.813 (401.65)	15.200 (386.08)	**35NEU225B**
125	—	—	4	2	1	3	2.266 (57.56)	0.594 (15.09)	**BINA**

Figure 1

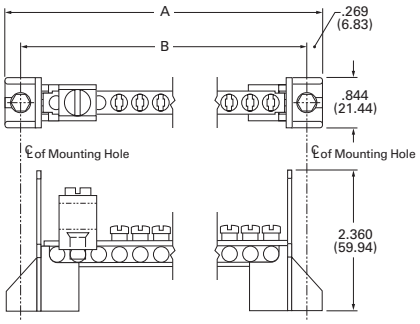

Figure 2

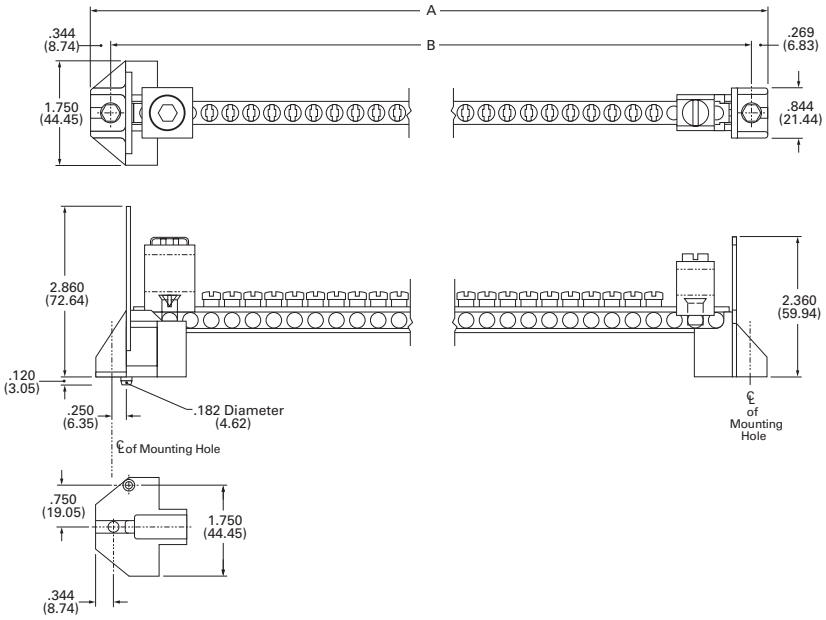

Figure 3

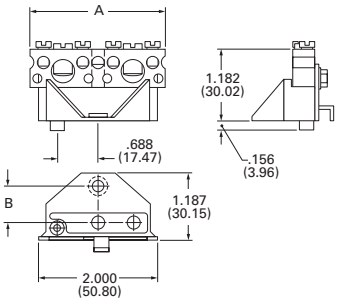

Add-on Lugs for Neutral Assemblies

Description	Wire Size Range Cu/Al 60 °C or 75 °C	Ordering Quantity ①	Catalog Number
Neutral/ground lug Add-on neutral or ground lug	#2/0 maximum	1	**NL20**
	#3/0 maximum	1	**NL30**
	300 kcmil maximum	1	**NL300**

GBK14

BRGBK39512

Ground Bar Kits

Description (See Legend)	Length Inches (mm)	Ordering Quantity ①	Catalog Number
●○○○○●○	2.54 (64.5)	1	**GBK5** ②
●○○○○●○■	3.59 (91.2)	1	**GBK520** ②
●○○○○●○○○○○○	4.29 (109.0)	1	**GBK10** ②
●○○○○●○○○○○○■	5.34 (135.6)	1	**GBK1020** ②
◒●◒◒◒⬓◒●◒⬓◒◒◒	4.61 (117.1)	1	**GBK13** ②
●○○○○●○○○○○○○○○	5.69 (144.5)	1	**GBK14** ②
●○○○○●○○○○○○○○○■	6.74 (171.2)	1	**GBK1420** ②
●○○○○●○○○○○○○○○○○○○○○	8.14 (206.8)	1	**GBK21** ②
●○○○○●○○○○○○○○○○○○○○○○■	9.19 (233.4)	1	**GBK2120** ②
◒⬓◒●◒⬓◒◒◒⬓◒●◒⬓◒◒◒⬓◒	5.78 (146.8)	1	**BRGBK39512** ③④

Ground Bar Legend

○ (3) #14–10 Cu/Al or (1) #14–4 Cu/Al
■ (1) #6–2/0 Cu/Al
⬓ (1) #14–1/0 Cu/Al or (3) #14–10 Cu/Al
◒ (1) #14–6 Cu/Al or (2) #14–12 Cu/Al
● Mounting Hole

Notes

① Must be purchased in multiples of ordering quantities indicated.
② Distance between mounting holes is 1.75 inches (44.5 mm).
③ For single- and three-phase 400 and 600 A applications.
④ Distance between mounting holes is 2.34 inches (59.5 mm).

Enclosed Breakers

Contents

Description	*Page*
Product Selection	**V1-T1-95**
Dimensions	**V1-T1-95**

Product Overview

Eaton enclosed breakers offer all the advantages of circuit breakers packed in an enclosure for 240 Vac applications and include a wide range of accessories.

Product Description

- 100–225 A, 240 Vac maximum
- NEMA 1 general purpose—surface or flush mounting
- NEMA 3R rainproof surface mounting

Standards and Certifications

- UL 489
- CSA 22.2
- NEMA 250

Listed

Product Selection

Single-Phase and Three-Phase Circuit Breaker Enclosures—10/25 kAIC

ECC225R

Type ECC Circuit Breaker Enclosure—Order Type CC Circuit Breaker Separately

Main Ampere Rating	Unit Enclosure Type	Mounting Type	Circuit Breaker Type	Wire Size Range Cu/Al 60 °C or 75 °C	Catalog Number
Single- and Three-Phase—240 Vac Maximum					
100	Indoor	Surface	CCVH factory installed (25 kAIC)	#4–4/0	**ECCVH100S** ①②③
150	Indoor	Surface	CCVH factory installed (25 kAIC)	#4–4/0	**ECCVH150S** ①②③
200	Indoor	Surface	CCVH factory installed (25 kAIC)	#2/0–300 kcmil	**ECCVH200S** ①②③
100	Outdoor	—	CCVH factory installed (25 kAIC)	#4–4/0	**ECCVH100R** ①②④
150	Outdoor	—	CCVH factory installed (25 kAIC)	#4–4/0	**ECCVH150R** ①②④
200	Outdoor	—	CCVH factory installed (25 kAIC)	#2/0–300 kcmil	**ECCVH200R** ①②④
225	Indoor	Flush	CC/CCV/CCH	⑥	**ECC225F** ②③⑤
225	Indoor	Surface	CC/CCV/CCH	⑥	**ECC225S** ②③⑤
225	Outdoor	—	CC/CCV/CCH	⑥	**ECC225R** ②③④⑤

CCV2200

Circuit Breaker 240 Vac for Use in Type ECC Enclosures

Ampere Rating	Wire Size Range Cu/Al 60 °C or 75 °C for Line Terminals	Type CCV and CC 10 kAIC Catalog Number	Type CCVH/CCH 25 kAIC Catalog Number
Two-Pole			
60	#4–4/0	**CCV2060**	**CCVH2060**
70		**CCV2070**	**CCVH2070**
80		**CCV2080**	**CCVH2080**
90		**CCV2090**	**CCVH2090**
100		**CCV2100**	**CCVH2100**
125		**CCV2125**	**CCVH2125**
150		**CCV2150**	**CCVH2150**
175	#2/0–300 kcmil	**CCV2175**	**CCVH2175**
200		**CCV2200**	**CCVH2200**
225		**CCV2225**	**CCVH2225**
Three-Pole			
100	#4–4/0	**CC3100**	**CCH3100**
125		**CC3125**	**CCH3125**
150		**CC3150**	**CCH3150**
175	#2/0–300 kcmil	**CC3175**	**CCH3175**
200		**CC3200**	**CCH3200**
225		**CC3225**	**CCH3225**

Shunt Trips and Auxiliary Contacts

Description Type	Volts	Catalog Number Suffix Adder ⑦
Shunt Trip		
CC	12 DC	**SR12**
CC	24 DC	**SR24**
CC	120 AC	**SR01**
CC	208 AC	**SR08**
CC	240 AC	**SR02**
CCV	48–127 AC/48–60 DC	**SR01**
CCV	9–24 AC/12–24 DC	**SR02**
CCV	208–380 AC/100–127 DC	**SR04**
Auxiliary Contact		
CC 1NO and 1NC	—	**AL1**

Dimensions

Approximate Dimensions in Inches (mm)

ECC Unit Enclosures—NEMA Type 1 Indoor

Height	Width	Depth
23.25 (590.6)	8.88 (225.4)	4.50 (114.3)

ECC Unit Enclosures—NEMA Type 3R Outdoor

Height	Width	Depth
23.68 (601.7)	9.31 (236.5)	5.44 (138.1)

Notes

① Factory installed CCVH breaker.
② Approved for service entrance.
③ One ground lug accepting (1) #14–#2 is factory installed. Also, there are pre-drilled holes to accept a GBK5 ground bar.
④ Rainproof panels are furnished with hub closures plates. For rainproof hubs, refer to **Page V1-T1-66**.
⑤ Order circuit breaker separately.
⑥ Wire size is determined by the circuit breaker installed in enclosure.
⑦ Add suffix indicated to end of breaker catalog number.

Classified Breakers

Contents

Description	*Page*
Product Selection	**V1-T1-97**
Accessories	**V1-T1-99**
Technical Data	**V1-T1-99**
Wiring Diagrams	**V1-T1-100**

Product Description

Eaton UL classified Replacement Circuit Breakers are available in both 3/4-inch Type CHQ and 1-inch Type CL, single- and two-pole configurations. These breakers are classified as direct replacements by Underwriters Laboratories. In addition to a UL listing, they also come with a 15-year warranty.

Specified vs. UL Classified

Specified breakers are listed by the manufacturer of the panelboard for use in a particular panel. This doesn't mean that the panelboard manufacturer produced the specified breaker; it merely means that the panelboard manufacturer has tested the breaker in the panel. In fact, through the years, Eaton has manufactured thousands of breakers for other panelboard manufacturers.

UL classified breakers are produced by one manufacturer for use in place of the breakers specified on the panelboard. Like specified breakers, UL classified breakers have been tested in the panels for which they are approved.

Testing

Classified breakers are tested extensively in numerous General Electric®, Siemens®, Murray®, Thomas & Betts®, Square D®, and Crouse-Hinds® panels. The tests are conducted with witnesses from Underwriters Laboratories Inc. and involve short-circuit, temperature, and insertion/withdrawal applications. This level of testing ensures that the breakers meet identified standards and have been found suitable by UL for the specified purpose.

Understanding Classified Breaker Terminology

Definitions

Specified circuit breaker—each manufacturer lists the brands of circuit breakers that can be used in their panelboards. Often, manufacturers will not list competitors as specified, even though they are suitable replacements.

Classified circuit breaker—a breaker that is considered suitable, by a qualified third-party organization, for use in another manufacturer's panelboard.

Listed breaker—the listing of a circuit breaker is by an independent third party. Eaton classified breakers are listed by UL.

Labeled breaker—a breaker with a label affixed by an independent third party.

Product Selection

Type CHQ Replacement Breakers for Square D Type QO Loadcenters

10 kAIC, 120 and 120/240 Vac

CHQ120 CHQ230

Type CHQ Classified Breakers 3/4-Inch (19.1 mm) per Pole 120 or 120/240 Vac, 10 kAIC

Ampere Rating	Wire Size Range Cu/Al 60 °C or 75 °C	Single-Pole 120/240 Vac Requires One 3/4-Inch (19.1 mm) Space 10 per Shelf Carton Catalog Number	Two-Pole 120/240 Vac Common Trip Requires Two 3/4-Inch (19.1 mm) Spaces 5 per Shelf Carton Catalog Number
15	(1) #14–8 (2) #14–10	CHQ115	CHQ215
20		CHQ120	CHQ220
25		CHQ125	CHQ225
30		CHQ130	CHQ230
35		CHQ135	CHQ235
40		CHQ140	CHQ240
45		CHQ145	CHQ245
50		CHQ150	CHQ250
60		—	CHQ260

Type CHQ Ground Fault and Arc Fault Replacement Breakers for Square D Type QO Loadcenters

10 kAIC, 120 and 120/240 Vac

CHQ115GF CHQ220GF

Type CHQ Ground Fault Breakers—5 Milliampere—3/4-Inch (19.1 mm) per Pole, 10 kAIC

Ampere Rating	Wire Size Range Cu/Al 60 °C or 75 °C	Single-Pole 120 Vac Requires One 3/4-Inch (19.1 mm) Space 10 per Shelf Carton Catalog Number	Two-Pole 120/240 Vac Common Trip Requires Two 3/4-Inch (19.1 mm) Spaces 5 per Shelf Carton Catalog Number
15	(1) #14–8 (2) #14–10	CHQ115GF	CHQ215GF
20		CHQ120GF	CHQ220GF
25		CHQ125GF	CHQ225GF
30		CHQ130GF	CHQ230GF
35		—	CHQ235GF
40		—	CHQ240GF
45		—	CHQ245GF
50		—	CHQ250GF

Type CHQ Surge Arrester

Catalog Number
CHQSA

1

Type CL Replacement Breakers for Square D HOMELINE, General Electric, Crouse-Hinds, Thomas & Betts, Murray and ITE®/Siemens Loadcenters

CL_

Type CL Breakers, 1-Inch (25.4 mm) per Pole, 10 kAIC

Ampere Rating	Wire Size Range Cu/Al 60 °C or 75 °C	Single-Pole 120/240 V Requires One 1-Inch (25.4 mm) Space 10 per Shelf Carton Catalog Number	Two-Pole 120/240 V Common Trip Requires Two 1-Inch (25.4 mm) Spaces 5 per Shelf Carton Catalog Number
15	#14–4	**CL115**	**CL215**
20	#14–4	**CL120**	**CL220**
25	#14–4	**CL125**	**CL225**
30	#14–4	**CL130**	**CL230**
35	#14–4	**CL135**	**CL235**
40	#14–4	**CL140**	**CL240**
45	#14–4	**CL145**	**CL245**
50	#14–4	**CL150**	**CL250**

CL_AF

Type CL Classified Arc and Ground Fault Breakers (5 Milliampere), 1-Inch (25.4 mm) per Pole, 10 kAIC

Ampere Rating	Wire Size Range Cu/Al 60 °C or 75 °C	Single-Pole 120/240 V Requires One 1-Inch (25.4 mm) Space 1 per Shelf Carton Catalog Number
Arc Fault Breakers		
15	#14–4	**CL115AF**
20	#14–4	**CL115CAF**
20	#14–4	**CL120AF**
20	#14–4	**CL120CAF**
Ground Fault Breakers		
15	#14–4	**CL115GF**
20	#14–4	**CL120GF**
30	#14–4	**CL130GF**

CLR_

Type CL Classified Latching Remote Control Smart Breakers™, 1-Inch (25.4 mm) per Pole, 10 kAIC

Ampere Rating	Wire Size Range Cu/Al 60 °C or 75 °C	Single-Pole 120 V Requires One 1-Inch (25.4 mm) Space 10 per Shelf Carton Catalog Number	Two-Pole 120/240 V Common Trip Requires Two 1-Inch (25.4 mm) Spaces 5 per Shelf Carton Catalog Number
15	(2) #14–10	**CLRP115**	**CLRP215**
20	(2) #14–10	**CLRP120**	**CLRP220**
25	(1) #8–6	**CLRP125**	**CLRP225**
30	(1) #8–6	**CLRP130**	**CLRP230**

Accessories

CHQ Breaker Accessories

Description	Catalog Number
Breaker handle lock	**CHLO**

Technical Data

Arc Fault Application Notes

An arc fault circuit interrupter is a device intended to provide protection from the effects of arc faults by recognizing characteristics unique to arcing and by functioning to de-energize the circuit when the arc fault is detected. As of January 1, 2002, the National Electrical Code (NEC) requires all branch circuits that supply 125 V, single-phase, 15 and 20 A receptacle outlets installed in dwelling unit bedrooms shall be protected by an arc fault circuit interrupter(s). This includes ceiling lighting (recessed, ceiling fans, etc.) as well as smoke detectors and all other bedroom outlets. The 2005 NEC introduced the application of the Combination Type AFCI for bedroom circuits required as of January 1, 2008. The 2008 NEC expands this application to other living areas.

Ground Fault Application Notes

Single-pole GFCBs are designed for use in two-wire, 120 Vac circuits. Drawing on **Page V1-T1-100** shows a typical wiring configuration.

Two-pole GFCBs are designed for use in three-wire, 120/240 Vac circuits, 120 Vac multiwire circuits employing common, neutral and two-wire, 240 Vac circuits obtained from a 120/240 Vac source.

Drawings on **Page V1-T1-100** illustrate typical wiring configurations for 120/240 Vac multiwire circuits.

Drawing on **Page V1-T1-100** depicts a 240 Vac, two-wire circuit. Note the "panel neutral" conductor connects to the neutral bar, even though the neutral is not included in the load circuit. This connection is necessary to supply a 120 Vac power source to the ground fault sensing circuit.

The figures are shown with a 120/240 Vac, single-phase, three-wire power source, ut are also applicable to a 120/208 Vac, three-phase, four-wire power supply. For all figures, the electrical operation of the GFCB is not affected by the equipment ground.

1

Wiring Diagrams

Single-Pole 120 V Load Application Sourced by 120/240 Vac

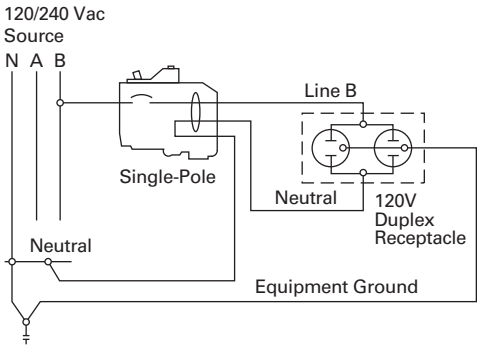

Two-Pole 240 V Load Application Sourced by 120/240 Vac

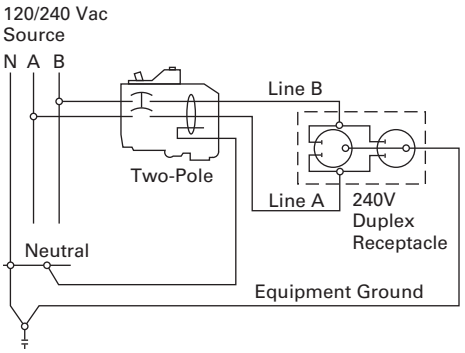

Two-Pole Shared Neutral with Multi-Duplex Receptacle Application

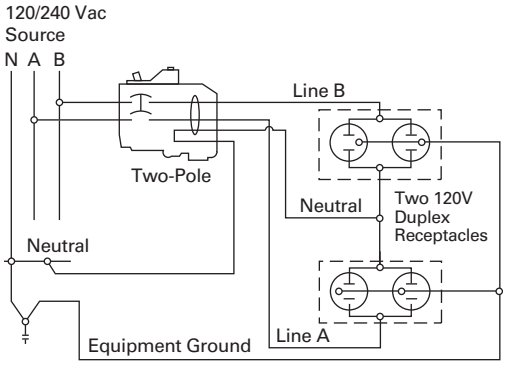

Two-Pole Shared Neutral with Duplex Receptacle Application

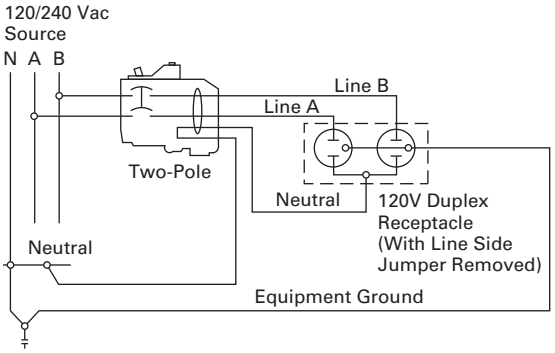

Single-Pole 120 V Duplex Receptacle Application

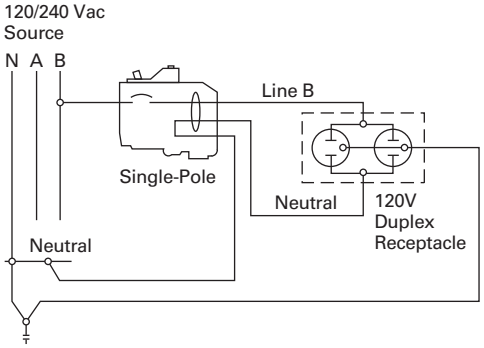

Two-Pole 120 V Duplex Receptacle Application

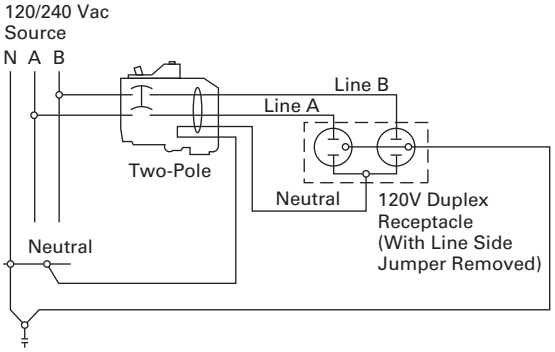

Two-Pole 120 V Multi-Duplex Receptacle Application

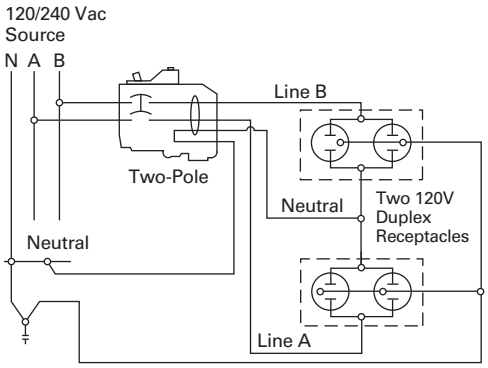

Two-Pole 240 V Duplex Receptacle Application

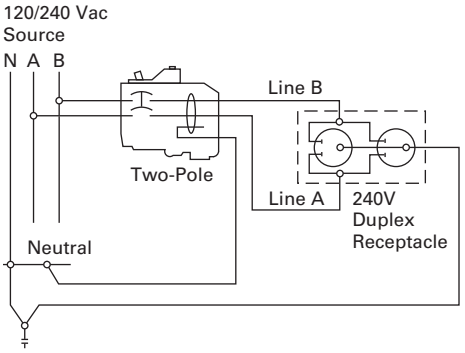

Surge Protection Devices

2.1 Surge Protection Devices and Lightning Arresters

Product Description V1-T2-2
Application Description V1-T2-2
Standards and Certifications V1-T2-3
Product Selection V1-T2-4

Learn Online

Surge Protection Devices

Contents

Description	*Page*
Surge Protection Devices and Lightning Arresters	
Standards and Certifications	**V1-T2-3**
Product Selection	**V1-T2-4**

Product Description

Due to the evolution of electronics and microprocessors in the home, there is a continuous challenge to provide quality (clean) power for electronic loads such as appliances, computers/home office and entertainment systems. Surges caused by lightning, utility grid switching and other sources travel on current carrying conductors throughout the home, which can affect and destroy sensitive electronic loads.

Eaton offers a comprehensive family of surge products for use at service entrances. These products can help protect sensitive electronics against the damaging effects of surges.

Application Description

Two-Stage Protection

Two stages of surge suppression are recommended to provide the best protection for electronic equipment. Two-stage surge suppression should be provided for all cables entering a home, including power, Internet, coaxial and telephone.

Service Entrance Surge Protection

Eaton's service entrance surge protection units provide premier surge protection for AC power at the service entrance. These products provide protection for residential electrical equipment by reducing power surges to an acceptable level for surge strips to handle at the point of use.

UL 1449 3rd Edition Type 1 and Type 2 Surge Protection

- **Type 1 Surge Protective Device (SPD)**—Permanently connected Type 1 SPDs are intended for installation between the secondary of the service transformer and the line side of the service equipment overcurrent device, as well as the load side, including watt-hour meter socket enclosures, and are intended to be installed without an external overcurrent protective device. Type 1 devices are dual-rated for Type 2 applications as well, providing the highest ratings available for installation at the service entrance
  - Eaton's CHSPT1 products provide Type 1 surge protection in accordance with UL® 1449 3rd Edition. These units can be universally mounted outside any manufacturer's primary service equipment
- **Type 2 Surge Protective Device**—Permanently connected Type 2 SPDs are intended for installation on the load side of the service equipment overcurrent device, including SPDs located at the branch panel
  - CHSPT2 products provide Type 2 surge protection in accordance with UL 1449 3rd Edition. These units can be mounted outside of any manufacturer's loadcenter or inside an Eaton Surge/Surge Ready loadcenter. Eaton also offers accessories to the CHSPT2 line for telephone and cable protection
- **Factory-Installed Surge Protection**—Eaton's loadcenters with factory-installed surge protection include a CHSPT2ULTRA and a two-pole 50 A circuit breaker. These loadcenters increase the effectiveness of surge protection due to reduced lead length. A modified deadfront allows for easy viewing of indicating lights for status indication

Surge Panel

- **Surge Ready Loadcenter**—The Surge Ready loadcenter provides a mounting provision for the CHSPT2ULTRA. This loadcenter has a modified deadfront to allow for viewing of indicating lights

Two-Stage Protection

① CHSP installed at the service entrance panel.
② SurgeTrap™ surge traps and strips located where sensitive electronics are plugged in.

Plug-On Surge Protection

- **Type CHSA**—For use on single-phase 120/240 Vac systems. The CHSA easily plugs into a single-phase Type CH loadcenter and occupies two 3/4-inch (19.1 mm) pole spaces, similar to a two-pole Type CH breaker. When installed properly, it provides surge protection for the entire loadcenter. If internal components are damaged, the CHSA LED visual indicators will signal the need for a replacement. This device is suitable for service entry locations when installed in accordance with NEC® guidelines
- **Type BRSURGE**—For use on single-phase 120/240 Vac systems. This easily plugs into a single-phase Type BR loadcenter and occupies two 1-inch (25.4 mm) pole spaces similar to a two-pole Type BR breaker. When installed properly, it provides surge protection for the entire loadcenter. If internal components are damaged, the BRSURGE LED visual indicators will signal the need for replacement. This device is suitable for service entry locations when installed in accordance with NEC guidelines. This unit is also classified by UL for use in select GE, ITE/Siemens and Crouse-Hinds Panels (refer to Pub No. 5655B65H01 for additional details)
- **Type CHQSA**—For use on single-phase, 120/240 Vac systems. This unit easily plugs into a Square D single-phase loadcenter Type QO® and occupies two 3/4-inch (19.1 mm) pole spaces similar to a two-pole Type QO breaker. When installed properly, it provides surge protection for the entire loadcenter. If internal components are damaged, the CHQSA LED visual indicators will signal the need for a replacement. This device is suitable for service entrance locations installed in accordance with NEC guidelines. This device is UL classified to be used in place of Square D Type QO surge arresters (refer to Pub-23974)
- **Type BRSURGECSA**—For use on single-phase 120/240 Vac systems. This easily plugs into a single-phase Type BR loadcenter and occupies two 1-inch (25.4 mm) pole spaces similar to a two-pole Type BR breaker. When installed properly, it provides surge protection for the entire loadcenter. If internal components are damaged, the BRSURGECSA LED visual indicators will signal the need for replacement. This device is suitable for service entry locations when installed in accordance with Canadian Electrical Code. This device is CSA® listed to be used in a Type BR loadcenter

Type 3 Point-of-Use Surge Protection

Point-of-use surge protectors such as surge receptacles are installed within 30 ft of conductor length from the service panel and are designed to offer premium surge protection for specific electronics while providing innovative features to enhance user convenience.

Standards and Certifications

- CHSPT1 Products: UL 1449 3rd Edition Type 1
- CHSPT2 Products: UL/cUL® 1449 3rd Edition Type 2
- CHSPTELE: UL 497A, cUL
- CHSPCABLE: UL 6500, cUL
- NEMA® 3R Enclosure for CHSPTELE and CHSPCABLE: UL 50 Enclosure
- BRSURGE, CHSA, BRSURGECSA, CHQSA: UL 1449 3rd Edition plug-in type; Type 2 SPD

Product Selection

SPD Type 1 CHSP Service Entrance Surge Protection—UL 1449 3rd Edition

Product Features

- Commercial grade AC power protection
- Type 1 surge device for installation before or after the main service disconnect
- Convenient mounting options—universal fit to any manufacturer's equipment
- Clear, visible LED indication displaying status of the surge protector

	Catalog Number	Connection	Enclosure	Voltage	Phase	Frequency (Hz)	MCOV ①	VPR ②	I_n ③	SCCR ④	Surge Current Capacity, Per Phase Rating ⑤
CHSPT1ULTRA	CHSPT1ULTRA	Permanently connected device installed before or after the service disconnect overcurrent device.	NEMA 4	100/200 Vac, 110/220 Vac, 120/240 Vac	Single	50/60	300 V L–L, 150 V L–N	1000 V L–L, 600 V L–N	20 kA	200 kA	50 kA
CHSPT1MAX	CHSPT1MAX	Permanently connected device installed before or after the service disconnect overcurrent device.	NEMA 4	100/200 Vac, 110/220 Vac, 120/240 Vac	Single	50/60	300 V L–L, 150 V L–N	1000 V L–L, 600 V L–N	20 kA	200 kA	45 kA
CHSPT1MICRO	CHSPT1MICRO	Permanently connected device installed before or after the service disconnect overcurrent device.	NEMA 4	100/200 Vac, 110/220 Vac, 120/240 Vac	Single	50/60	300 V L–L, 150 V L–N	1000 V L–L, 600 V L–N	20 kA	200 kA	36 kA
CHSPT1-208Y	CHSPT1-208Y	Permanently connected device installed before or after the service disconnect overcurrent device.	NEMA 4	120/208 Vac	Three-phase wye	50/60	300 V L–L, 150 V L–N	1000 V L–L, 600 V L–N	20 kA	200 kA	50 kA

Accessory for Type 1 CHSP Service Entrance Surge Protection

	Catalog Number	Description
SP1DINRAILKIT	SP1DINRAILKIT	Mounting kit for wall or DIN rail installation.

Notes

① MCOV: Maximum Continuous Operating Voltage that may be applied to the device per mode.
② VPR: Voltage Protection Rating is the measured limiting voltage after a surge event.
③ I_n: Nominal Discharge Current is the current that the device can withstand for 15 impulses.
④ SCCR: The amount of current the product can withstand under short-circuit conditions.
⑤ Surge Current Capacity: The maximum one time surge current rating per phase.

For warranty details, go to www.eaton.com/surgetrap.

SPD Type 2 CHSP Service Entrance Surge Protection—UL 1449 3rd Edition; cUL

Product Features

- AC power protection
- Universally connects to any manufacturer's loadcenter (breaker box)
- Quick connect design—easy to mount telephone and cable protection modules
- LED status indication

	Catalog Number	Connection	Enclosure	Voltage	Phase	Frequency (Hz)	MCOV ①	VPR ②	I_n ③	SCCR ④	Surge Current Capacity, Per Phase Rating ⑤
CHSPT2ULTRA	**CHSPT2ULTRA**	Can be attached to the outside of any manufacturer's loadcenter (breaker box). This product should be connected on the load side of the loadcenter main service disconnect through a dedicated circuit breaker (follow NEC Guidelines).	NEMA 4	120/240 Vac rated line voltage	Single	60	150 V L–N, 300 V L–L	600 V L–N, 1000 V L–L, 800 V N–G, 600 V L–G	20 kA ⑥	22 kA	**108 kA** (L1–N 54 kA, L1–G 54 kA, L2-N 54 kA, L2–G 54 kA)
CHSPT2MAX	**CHSPT2MAX**	Can be attached to the outside of any manufacturer's loadcenter (breaker box). This product should be connected on the load side of the loadcenter main service disconnect through a dedicated circuit breaker (follow NEC Guidelines).	NEMA 4	120/240 Vac rated line voltage	Single	60	150 V L–N, 300 V L–L	600 V L–N, 1000 V L–L, 800 V N–G, 600 V L–G	10 kA	22 kA	**72 kA** (L1–N 36 kA, L1–G 36 kA, L2–N 36 kA, L2–G 36 kA)
CHSPT2MICRO	**CHSPT2MICRO**	Can be attached to the outside of any manufacturer's loadcenter (breaker box). This product should be connected on the load side of the loadcenter main service disconnect through a dedicated circuit breaker (follow NEC Guidelines).	NEMA 4	120/240 Vac rated line voltage	Single	60	150 V L–N, 300 V L–L	600 V L–N, 1000 V L–L, 800 V N–G, 600 V L–G	5 kA	22 kA	**36 kA** (L1–N 18 kA, L1–G 18 kA, L2–N 18 kA, L2–G 18 kA)

Notes

① MCOV: Maximum Continuous Operating Voltage that may be applied to the device per mode.
② VPR: Voltage Protection Rating is the measured limiting voltage after a surge event.
③ I_n: Nominal Discharge Current is the current that the device can withstand for 15 impulses.
④ SCCR: The amount of current the product can withstand under short-circuit conditions.
⑤ Surge Current Capacity: The maximum one time surge current rating per phase.
⑥ When used with a 50 A two-pole circuit breaker, 10 kA when used with a 15 A two-pole circuit breaker.

For warranty details, go to www.eaton.com/surgetrap.

Accessories for CHSP Type 2 Service Entrance Protection

	Catalog Number	Description	Installation	Surge Current Capacity	DC Breakdown Voltage	Voltage
CHSPCABLE	**CHSPCABLE**	Quick Connect design—add additional telephone and AC protection modules; protects two quad shield cables; bi-directional	Indoor installation; or rain-tight when used with recommended enclosure	10 kA per line	145 V	
CHSPTELE	**CHSPTELE**	Quick Connect design—add additional AC and cable protection modules; protects four telephone lines	Indoor installation; or rain-tight when used with recommended enclosure	20 kA per line	230 V	Ring 90–120 Vac/ Tone 48–52 Vdc
CHSPT23PACK	**CHSPT23PACK**	3-Pack: CHSPT2ULTRA+CHSPTELE+CHSPCABLE; Surge protection for AC power, telephone and cable—see individual product features		See individual product ratings		
CHSP3RTELCABLE	**CHSP3RTELCABLE**	Raintight enclosure for CHSPTELE and CHSPCABLE; top or bottom feed; enclosure only, surge not included; accommodates up to two devices				
CHSPFMKIT	**CHSPFMKIT**	Flushmount kit for: CHSPT2ULTRA, CHSPT2MAX, CHSPT2MICRO, CHSPTELE, CHSPCABLE				
MSEGR2	**MSEGR2**	Outdoor communication grounding device; meets 2008 NEC requirements for intersystem bonding termination				

Note

For warranty details, go to www.eaton.com/surgetrap.

Type BR and CH Surge Breakers

Product Description

The CH and BR surge breaker is designed to provide premier AC power surge protection for sensitive electronics and appliances from the damaging effects of electrical surges. In addition, the surge breaker is a functional two-pole thermal magnetic breaker.

The combination of circuit protection and surge protection provides extra flexibility and space saving in the loadcenter.

Product Features

- Complete home surge protection for all circuits plus a functional two-pole thermal magnetic breaker
- LEDs provide protection status
- Plug-on connection to the busbar provides superior protection and easy installation for new construction or renovation
- Eliminates the potential for incorrect installation of externally mounted surge devices—(longer "lead" lengths can reduce protection levels)

Type CH Surge Breakers

Type BR Surge Breakers

Catalog Number ①	Poles	Ampere Rating	Voltage	Phase	Frequency (Hz)	MCOV ②	VPR ③	I_n ④	SCCR ⑤	Surge Current Capacity, Per Phase Rating ⑥
Type CH Surge Breakers										
CH230SUR	Two-pole 10 kAIC	30	120/240 Vac	Single	50/60	150 V L–N, 300 V L–L	600 V L–N, 1000 V L–L	10 kA	10 kA	36 kA (L1–N 36 kA, L2–N 36 kA)
CH250SUR		50	120/240 Vac	Single	50/60	150 V L–N, 300 V L–L	600 V L–N, 1000 V L–L	10 kA	10 kA	36 kA (L1–N 36 kA, L2–N 36 kA)
Type BR Surge Breakers										
BR230SUR	Two-pole 10 kAIC	30	120/240 Vac	Single	50/60	150 V L–N, 300 V L–L	600 V L–N, 1000 V L–L	10 kA	10 kA	36 kA (L1–N 36 kA, L2–N 36 kA)
BR250SUR		50	120/240 Vac	Single	50/60	150 V L–N, 300 V L–L	600 V L–N, 1000 V L–L	10 kA	10 kA	36 kA (L1–N 36 kA, L2–N 36 kA)

Notes

① Clamshell packaging available with CS modification code on the end of catalog number.
② MCOV: Maximum Continuous Operating Voltage that may be applied to the device per mode.
③ VPR: Voltage Protection Rating is the measured limiting voltage after a surge event.
④ I_n: Nominal Discharge Current is the current that the device can withstand for 15 impulses.
⑤ SCCR: The amount of current the product can withstand under short-circuit conditions.
⑥ Surge Current Capacity: The maximum one time surge current rating per phase.

Surge Protection Receptacles with LED Indicators and Audible Alarm

Product Description

- Two-pole, three-wire grounding
- 15 A, 125 Vac; 20 A, 125 Vac; NEMA 5-15R and 5-20R

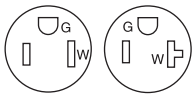

5-15R 5-20R

ArrowLink option available. Add "M" suffix to standard catalog number (example 8300WS, 8300WSM).

Build-to-spec customizable devices.

5362_S

IG5350_S

IG1208

1209

35M2S

Catalog Number	Color Suffix	Ampere Rating	Voltage	NEMA	Description		
Receptacles with Audible Alarm and LED Indicators, Back and Side Wire							
5262__S	BL, GY, V, W	15	125 Vac	5-15R	Surge duplex receptacle	■	■
IG5262__S	BL, GY, RN, V, W				IG Surge duplex receptacle	■	■
5362__S	BL, GY, V, W	20	125 Vac	5-20R	Surge duplex receptacle	■	■
IG5362__S	BL, GY, RN, V, W				IG Surge duplex receptacle	■	■
560 Joules, max. surge current—18 kA per mode							
Receptacles with LED Indicators, Back and Side Wire							
5250__S	BL, GY, V, W	15	125 Vac	5-15R	Surge duplex receptacle	■	■
IG5250__S	BL, GY, RN, V, W				IG Surge duplex receptacle	■	■
5350__S	BL, GY, V, W	20	125 Vac	5-20R	Surge duplex receptacle	■	■
IG5350__S	BL, GY, RN, V, W				IG Surge duplex receptacle	■	■
840 Joules, max. surge current—18 kA per mode							
Receptacles with Audible Alarm							
1208__	V, W	15	125 Vac	5-15R	Surge duplex receptacle	■	■
IG1208__	V, W				IG Surge duplex receptacle	■	■
1210__	BL, V, W	20	125 vac	5-20R	Surge duplex receptacle	■	■
IG1210__	V, W				IG Surge duplex receptacle	■	■
340 Joules, max. surge current—12 kA per mode							

Catalog Number	Color Suffix	Ampere Rating	Voltage	Description
Multimedia Wallplates with Surge Protectors				
35M2S-__	W	15	125	Multimedia wallplate with recessed duplex surge receptacle
cETLus listed to UL1863 & ANSI/UL 60950-1, CSA C22.2 no. 60950-1-03; complies with all TIA/EIA 568-A & 570-B requirements				

Catalog Number	Color Suffix	Description
Replacement Surge Bloc Module		
1209__	A, BL, GY, V, W	Replacement module

Catalog Number	Color Suffix	Description
Accessories for Surge Protection Receptacles		
PJ26BL	BL	1-Gang mid-size decorator polycarbonate wallplate
PJ26W	W	1-Gang mid-size decorator polycarbonate wallplate
PJ26IG	RN	1-Gang mid-size decorator polycarbonate wallplate, pre-marked "ISOLATED GROUND"

Notes

For ordering devices, include catalog number followed by the color suffix: BL (Blue), GY (Gray), RD (Red), RN (Orange), V (Ivory), W (White)

BL	GY	RD	RN	V	W
(Blue)	(Gray)	(Red)	(Orange)	(Ivory)	(White)

Compliances, specifications and availability are subject to change without notice.

Factory-Installed Surge Protection

- Includes a CHSPT2ULTRA and a two-pole 50 A circuit breaker
- Increases the effectiveness of surge protection due to reduced lead length
- A modified deadfront allows for easy viewing of indicating lights for status indication

Surge Installed

Surge Installed Loadcenters

Catalog Number	Description	Cover Catalog Number Combination	Surface
CHSUR42N225L ①	42 ckt, 225 A, convertible	**CHSUR8LF**	**CHSUR8LS**
CHSUR42L225L2 ①	42 ckt, 225 A, convertible ②	**CHSUR8LF**	**CHSUR8LS**
CHSUR42B200L2 ①	42 ckt, 200 A, main breaker	**CHSUR8LF**	**CHSUR8LS**
CHSUR32N225K ①	32 ckt, 225 A, convertible	**CHSUR8KF**	**CHSUR8KS**
CHSUR32L225K ①	32 ckt, 225 A, convertible ②	**CHSUR8KF**	**CHSUR8KS**
CHSUR32B200K ①	32 ckt, 200 A, main breaker	**CHSUR8KF**	**CHSUR8KS**
CHSUR32B150K ①	32 ckt, 150 A, main breaker	**CHSUR8KF**	**CHSUR8KS**
CHSUR32B100K ①	32 ckt, 100 A, main breaker	**CHSUR8KF**	**CHSUR8KS**
CHSUR24L125E ①	24 ckt, 125 A, convertible ②	**CHSUR8EF**	**CHSUR8ES**
CHSUR24B100E ①	24 ckt, 100 A, main breaker	**CHSUR8EF**	**CHSUR8ES**
BRSUR4040N200	40/40 ckt, 200 A, convertible	Cover included	
BRSUR4040L200	40/40 ckt, 200 A, main lug	Cover included	
BRSUR4040B200	40/40 ckt, 200 A, main breaker	Cover included	
BRSUR3040N200	30/40 ckt, 200 A, convertible	Cover included	
BRSUR3040L200	30/40 ckt, 200 A, main lug	Cover included	
BRSUR3040B200	30/40 ckt, 200 A, main breaker	Cover included	

Surge Ready Loadcenters

- Provides a mounting provision for CHSPT2ULTRA
- A modified deadfront allows for easy viewing of indicating lights

Surge Ready

Surge Ready Loadcenters (Provision Only, CHSPT2ULTRA and Breaker Not Included)

Catalog Number	Description	Cover Catalog Number Combination	Surface
CHEC42N225L ①	42 ckt, 225 A, convertible	**CHSUR8LF**	**CHSUR8LS**
CHEC42L225L ①	42 ckt, 225 A, convertible ②	**CHSUR8LF**	**CHSUR8LS**
CHEC42B200L ①	42 ckt, 200 A, main breaker	**CHSUR8LF**	**CHSUR8LS**
CHEC32L225K ①	32 ckt, 225 A, convertible ②	**CHSUR8KF**	**CHSUR8KS**
CHEC32N225K ①	32 ckt, 225 A, convertible	**CHSUR8KF**	**CHSUR8KS**
CHEC32B200K ①	32 ckt, 200 A, main breaker	**CHSUR8KF**	**CHSUR8KS**
CHEC32B150K ①	32 ckt, 150 A, main breaker	**CHSUR8KF**	**CHSUR8KS**
CHEC32B100K ①	32 ckt, 100 A, main breaker	**CHSUR8KF**	**CHSUR8KS**
CHEC24L125E ①	24 ckt, 125 A, convertible ②	**CHSUR8EF**	**CHSUR8ES**
CHEC24B100E ①	24 ckt, 100 A, main breaker	**CHSUR8EF**	**CHSUR8ES**

Notes

① Order cover separately.
② With main lugs installed.

SPD Type 2 Plug-On Surge Protection—UL 1449 3rd Edition

Product Features

- Convenient surge protection for the loadcenter

	Catalog Number	Description	Connection	Voltage	Phase	Frequency (Hz)	MCOV ①	VPR ②	I_n ③	SCCR ④	Surge Current Capacity, Per Phase Rating ⑤
BRSURGE	**BRSURGE**	UL for use in a single-phase Type BR loadcenter. This unit is classified by UL for use in select GE, ITE/Siemens and Crouse-Hinds panels (refer to Pub. No. 5655B65H01 for additional details).	Plug on to the loadcenter bus; see instructions.	120/240 Vac	Single	60	150 V L1–N, 300 V L–L	600 V L1–N, 1000 V L–L	3 kA	10 kA	18 kA
CHSA	**CHSA**	UL and CSA for use in a Type CH loadcenter.	Plug on to the loadcenter bus; see instructions.	120/240 Vac	Single	60	150 V L1–N, 300 V L–L	600 V L1–N, 1000 V L–L	3 kA	10 kA	18 kA
BRSURGECSA	**BRSURGECSA**	CSA for use in an Eaton Type BR loadcenter.	Plug on to the loadcenter bus; see instructions.	120/240 Vac	Single	60	150 V L1–N, 300 V L–L	600 V L1–N, 1000 V L–L	3 kA	10 kA	18 kA
CHQSA	**CHQSA**	This device is UL classified to be used in place of Square D Type QO surge arresters (refer to Pub-23974).	Plug on to the loadcenter bus; see instructions.	120/240 Vac	Single	60	150 V L1–N, 300 V L–L	600 V L1–N, 1000 V L–L	3 kA	10 kA	18 kA

Notes

① MCOV: Maximum Continuous Operating Voltage that may be applied to the device per mode.
② VPR: Voltage Protection Rating is the measured limiting voltage after a surge event.
③ I_n: Nominal Discharge Current is the current that the device can withstand for 15 impulses.
④ SCCR: The amount of current the product can withstand under short-circuit conditions.
⑤ Surge Current Capacity: The maximum one-time surge current rating per phase.

For warranty details, go to www.eaton.com/surgetrap.

Residential Standby Backup Power Solutions

3.1 Standby Generators

Product Description V1-T3-2
Application Description V1-T3-2
Features, Benefits and Functions V1-T3-2
Standards and Certifications V1-T3-2
Catalog Number Selection V1-T3-3
Product Selection V1-T3-3
Air-Cooled Generators V1-T3-3
Liquid-Cooled Generators V1-T3-4
Accessories V1-T3-5
Sizing Guidelines V1-T3-6
Dimensions V1-T3-6

3.2 Portable Generators

Product Selection V1-T3-8
Dimensions V1-T3-10

3.3 Automatic Transfer Switches

Product Description V1-T3-11
Application Description V1-T3-11
Standards and Certifications V1-T3-12
Product Selection V1-T3-13
Standard Automatic Transfer Switches V1-T3-13
Green Automatic Transfer Switches—Featuring Active Load Management Technology V1-T3-13
ATS Ready Loadcenter V1-T3-14
Dimensions V1-T3-15

3.4 Manual Transfer Switches

Product Description V1-T3-16
Application Description V1-T3-16
Features, Benefits and Functions V1-T3-16
Standards and Certifications V1-T3-17
Reference Information V1-T3-17
Product Selection V1-T3-18
Manual Transfer Switches and Generator Panels Selection V1-T3-18
Power Inlet Boxes V1-T3-18
Technical Data and Specifications V1-T3-19
Dimensions V1-T3-19

Standby Generator Systems

EGENX20A

EGEN70

Contents

Description	*Page*
Standby Generators	
Catalog Number Selection	**V1-T3-3**
Product Selection	**V1-T3-3**
Accessories	**V1-T3-5**
Sizing Guidelines	**V1-T3-6**
Dimensions	**V1-T3-6**

Product Description

A standby generator system is a package of equipment specifically designed to provide substitute electrical power to a residence in the event of a utility power outage. These systems are comprised of a generator, transfer switch and the connections necessary for installation. Eaton's standby generator line consists of air-cooled and liquid-cooled models ranging from 8000 watts up to 150,000 watts.

Air-Cooled Standby

Eaton's air-cooled generators range from 8 to 22 kW and these units are perfect for automatically backing up every circuit within a home such as air conditioner units, refrigerators, lighting, furnace fans, sump pumps and water pumps.

Eaton's air-cooled standby generators offer fully automatic operation and provide most homeowners with enough power for complete whole house comfort. These units all operate at ultra quiet 66 dB, or less, sound level.

Liquid-Cooled Standby

Eaton's liquid-cooled generators feature automotive style engines that range from 22 to 150 kW of power output. These units run so quietly that you'll forget that you own a generator until you need it. These units are available in steel or aluminum enclosures and are available in single- and three-phase in four voltages: 120/240 V, single-phase; 120/208 V, three-phase; 240 V, three-phase; and 277/480 V, three-phase.

Application Description

Standby generator systems are most often used in residential, agricultural and light commercial applications. Comfort and safety are key concerns of many homeowners who are dependent on an uninterrupted supply of electricity.

The increase in our dependence on power is due in part to the popularity of home offices and in-home health care. Many regions of the United States experience periodic power outages due to extreme weather conditions such as ice and snowstorms, heat waves, tornadoes or hurricanes.

Eaton highly recommends that any generator system be installed by a qualified electrician and/or generator installer.

Features, Benefits and Functions

Eaton's generator systems offer a wide range of features. All systems feature:

- Powerful engines
- Reliable Eaton transfer switches and control systems using switching duty rated circuit breakers
- Weekly exercise function
- Automatic transfer systems feature automatic start/stop

Standards and Certifications

- CSA®, cUL® and UL 2200 listed and approved
- SCAQMD (selected models only)
- All transfer switches are UL® 67 and UL 1008 listed as "Transfer Switches"
- All generators are UL 2200 listed

Listed Listed

Catalog Number Selection

Air-Cooled Generators

EGENX 22 A

Type	Rated Power (LP/NG)	Enclosure
Eaton generator EGENX Series	**8** = 8/7 kW **11** = 11/10 kW **16** = 16/16 kW **20** = 20/18 kW **22** = 22/19.5 kW	**A** = Aluminum **Blank** = Steel

Liquid-Cooled Generators

EGEN 25 A N S Y

kW Rating		Voltage Required	Fuel Type	Enclosure	SCAQMD Compliance
22	**60**	**A** = Single-phase 120/240 V	**N** = Natural gas	**A** = Aluminum	**N** = No
25	**70**	**G** = Three-phase 208 V	**L** = Liquid propane	**S** = Steel	**Y** = Yes
27	**80**	**J** = Three-phase 240 V			
30	**100**	**K** = Three-phase 480 V			
36	**130**				
45	**150**				
48					

Product Selection

Air-Cooled Generators

Rated Power kW (LP/NG)	Maximum Rated Amperes at 240 Vac (LP/NG)	Main Line Circuit Breaker Amperes	Enclosure Material	Engine Size	Number of Cylinders	Fuel Type	GFI Receptacle	SCAQMD Compliant	Sound Emissions (dB at 7 m)	Limited Warranty (yrs)	Catalog Number ①
8/7	33.3/29.2	35	Steel	410 cc	1	Liquid propane/ natural gas	No	Yes	62	5	**EGENX8**
11/10	45.8/41.7	50	Aluminum	530 cc	2	Liquid propane/ natural gas	No	Yes	63	5	**EGENX11A**
16/16	66.6/66.6	65/55	Aluminum	992 cc	2	Liquid propane/ natural gas	No	Yes	66	5	**EGENX16A**
20/18	83.3/75.0	90	Aluminum	999 cc	2	Liquid propane/ natural gas	Yes	Yes	66	5	**EGENX20A** ②
22/19.5	91.7/81.2	100	Aluminum	999 cc	2	Liquid propane/ natural gas	Yes	Yes	67	5	**EGENX22A** ②

Notes

① Battery to be furnished by others. Recommended size: Group 26R, 12 V, 225 CCA min.

② Includes base fascia (No. EGENFASCIA) as standard.

EGEN48ANAN

Liquid-Cooled Generators ①②

Catalog Number Prefix	kW Rating	Voltages Available	Fuel Type	Enclosure	SCAQMD Compliance ③
EGEN22	22	**G**—208 V, three-phase	**N**—NG/LP field convertible (Default set up for NG)	**S**—Steel	**Y**—Yes (Default Compliant)
		J—240 V, three-phase			
EGEN25	25	**A**—120/240 V, single-phase	**N**—NG/LP field convertible (Default set up for NG)	**S**—Steel	**Y**—Yes (Default Compliant)
		G—208 V, three-phase			
		J—240 V, three-phase			
EGEN27	27	**A**—120/240 V, single-phase	**N**—NG/LP field convertible (Default set up for NG)	**A**—Aluminum	**Y**—Yes (Default Compliant)
		G—208 V, three-phase			
		J—240 V, three-phase			
EGEN30	30	**A**—120/240 V, single-phase	**N**—NG/LP field convertible (Default set up for NG)	**S**—Steel	**Y**—Yes (Default Compliant)
		G—208 V, three-phase			
		J—240 V, three-phase			
EGEN36	36	**A**—120/240 V, single-phase	**N**—NG/LP field convertible (Default set up for NG)	**A**—Aluminum	**Y**—Yes
		G—208 V, three-phase			
		J—240 V, three-phase			**N**—No
		K—480 V, three-phase			
EGEN45	45	**A**—120/240 V, single-phase	**N**—NG/LP field convertible (Default set up for NG)	**S**—Steel	**Y**—Yes
		G—208 V, three-phase			
		J—240 V, three-phase			**N**—No
		K—480 V, three-phase			
EGEN48	48	**A**—120/240 V, single-phase	**N**—NG/LP field convertible (Default set up for NG)	**A**—Aluminum	**Y**—Yes
		G—208 V, three-phase			
		J—240 V, three-phase			**N**—No
		K—480 V, three-phase			
EGEN60	60	**A**—120/240 V, single-phase	**N**—Natural gas	**A**—Aluminum	**Y**—Yes
		G—208 V, three-phase			
		J—240 V, three-phase	**L**—Liquid propane	**S**—Steel	**N**—No
		K—480 V, three-phase			
EGEN70	70	**A**—120/240 V, single-phase	**N**—Natural gas	**A**—Aluminum	**Y**—Yes
		G—208 V, three-phase			
		J—240 V, three-phase	**L**—Liquid propane		**N**—No
		K—480 V, three-phase			
EGEN80	80	**A**—120/240 V, single-phase	**N**—Natural gas	**A**—Aluminum	**Y**—Yes
		G—208 V, three-phase			
		J—240 V, three-phase	**L**—Liquid propane		**N**—No
		K—480 V, three-phase			
EGEN100	100	**A**—120/240 V, single-phase	**N**—Natural gas	**A**—Aluminum	**Y**—Yes
		G—208 V, three-phase			
		J—240 V, three-phase	**L**—Liquid propane		**N**—No
		K—480 V, three-phase			
EGEN130	130	**A**—120/240 V, single-phase	**N**—Natural gas	**A**—Aluminum	**Y**—Yes
		G—208 V, three-phase			
		J—240 V, three-phase	**L**—Liquid propane		**N**—No
		K—480 V, three-phase			
EGEN150	150	**A**—120/240 V, single-phase	**N**—Natural gas	**A**—Aluminum	**Y**—Yes
		G—208 V, three-phase			
		J—240 V, three-phase	**L**—Liquid propane		**N**—No
		K—480 V, three-phase			

Notes

① All liquid-cooled models suitable for "optional" standby backup power only, as dictated by NEC Article 702/NFPA 70. Not suitable for neither "emergency" nor "legally required" applications as dictated by NEC Article 700/701 and NFPA 110.

② Models 70–150 kW include battery. For all other liquid-cooled models, battery must be furnished by others.

③ South Coast Air Quality Management District (CA and MA). Check your local requirements.

Accessories

Generator Accessories—Air and Liquid-Cooled Generators

Description	Catalog Number
General Accessories	
Air-cooled transportation cart	**EGENCART**
Bisque paint kit for 2009 model lineup	**EGENPAINT**
Display shell—bisque color	**EGENSHELL**
Generator fascia for air-cooled models. Bisque color (included as standard on EGENX20A and EGENX22A models)	**EGENFASCIA**
Wireless Remote Monitoring	
Advanced wireless remote monitor w/smart device connectivity. Air-cooled/liquid-cooled generators. 2009 models or newer	**EGENMOBILE**
Adapter wire harness kit for EGENMOBILE. Required for liquid-cooled generators only 22–150 kW. 2009 models or newer	**EGENKIT**
Basic in-house remote wireless monitor. Compatible with air/liquid-cooled models. 2009 models or newer	**EGENinHOME**
Adapter wire harness kit for EGENinHOME. Required for liquid-cooled units only 22–150 kW. 2009 models or newer	**EGENinHOMEKIT**
Cold Weather Kits	
Cold weather kit for all air-cooled generator models (8–20 kW). Battery and crankcase warmer	**6212CH**
22, 27, 36, 45 and 60 kW (2.4 L) cold weather kit	**5630CH**
25 and 30 kW (1.5 L) cold weather kit	**6175CH**
100 and 130 kW (6.8 L) cold weather kit	**5633CH**
48 (5.4 L), 80 (4.6 L) and 70 and 150 kW (6.8 L) cold weather kit	**5632CH**
25 and 30 kW (1.6 L) cold weather kit for models prior to February 2012	**5629CH**
48 kW (4.2 L) cold weather kit for models prior to February 2012	**5631CH**
Extreme Cold Weather Kits	
25 and 30 kW extreme cold weather kit 1.5 L engine	**6174CH**
25 and 30 kW extreme cold weather kit 1.6 L engine (prior to February 2012)	**5615CH**
22, 27, 36, 45 and 60 kW extreme cold weather kit for 2.4 L engine	**5616CH**
48 kW extreme cold weather kit for 5.4 L engine	**6204CH**
48 kW extreme cold weather kit for 4.2 L engine (prior to February 2012)	**5618CH**
70, 100 and 130 kW generator extreme cold weather kit for 6.8 L engine gear drive	**5620CH**
80 kW extreme cold weather kit for 4.6 L engine	**5619CH**
150 kW generator extreme cold weather kit for 6.8 L engine direct drive	**5667CH**
Extreme cold weather kit (engine warmer) for air-cooled 8–10 kW, 410/530 cc engines (after April 2010)	**5863CH**
Extreme cold weather kit (engine warmer) for air-cooled 14–20 kW, 760/992/999 cc engines (after April 2010)	**5864CH**
Maintenance Kits	
8 kW generator maintenance kit 410 cc engine. For #EGENX8 model only	**6482CH**
11 kW generator maintenance kit 530 cc engine. For #EGENX11A model only	**6483CH**
16 kW generator maintenance kit, 992 cc engine. For #EGENX16A model only	**6484CH**
20 kW generator maintenance kit, 999 cc engine. For #EGENX20A model only	**6485CH**
22 kW generator maintenance kit, 999 cc engine. For #EGENX22A model only	**6485CH**
8 kW generator maintenance kit 410 cc engine. #EGEN8 vintage model only	**5662CH**
10 kW generator maintenance kit 530 cc engine. #EGEN10 vintage model only	**5663CH**
14 and 17 kW generator maintenance kit, 760/990 cc engine. #EGEN14 and #EGEN17-17A vintage models only	**5664CH**
14 and 17 kW generator maintenance kit, 760/990 cc engine. For #EGENX14 and #EGENX17-17A vintage models only	**6484CH**
20 kW generator maintenance kit, 999 cc engine. #EGEN20A vintage model only	**5665CH**
22 and 27 kW generator maintenance kit, 2.4 L engine	**5656CH**
25 and 30 kW generator maintenance kit, 1.5 L engine	**6176CH**
25 and 30 kW generator maintenance kit, 1.6 L engine (prior to February 2012)	**5655CH**
36 kW generator maintenance kit, 2.4 L engine	**5984CH**
45 kW generator maintenance kit, 2.4 L engine	**6172CH**
48 kW generator maintenance kit, 4.2 L engine	**5658CH**
60 kW generator maintenance kit, 2.4 L engine	**6171CH**
80 kW generator maintenance kit, 4.6 L engine	**5985CH**
70, 100, 130 and 150 kW generator maintenance kit, 6.8 L engine	**5660CH**

EGENMOBILE

Cold Weather Kits

Extreme Cold Weather Kits

Maintenance Kits

Sizing Guidelines

When selecting the essential circuits that will be switched to "Backup Power," it is important that the sum of the combined circuit loads does not exceed the wattage/amperage capacity of the generator. To help you with your selection of essential circuits, please add up the total wattage of all electrical devices to be connected at one time. This total should NOT be greater than the generator's wattage capacity.

Refer to Eaton Generator Sizing Guide Publication Number TD00405018E and consult with a trained professional.

Circuit Selection ①②③

Device	Common Running Watts
Air conditioner (12,000 btu)	1700
Air conditioner (24,000 btu)	3800
Air Conditioner (40,000 btu)	6000
Battery charger (20 amp)	500
Circular saw (6-1/2-inch)	800–1000
Clothes dryer (electric)	5750
Clothes dryer (gas)	700
Clothes washer	1150
Coffee maker	1750
Compressor (1 hp)	2000
Compressor (1/2 hp)	1400
Compressor (3/4 hp)	1800
Curling iron	700
Dehumidifier	650
Electric blanket	400
Electric range (per element)	1500
Electric skillet	1250
Freezer	700
Furnace fan (3/5 hp)	875
Garage door opener	500–750
Hair dryer	1200
Hand drill	250–1100
Iron	1200
Jet pump	800
Light bulb	100
Microwave oven	700–1000
Milk cooler	1100
Oil burner on furnace	300
Oil fired space heater (140,000 btu)	400
Oil fired space heater (30,000 btu)	150
Oil fired space heater (85,000 btu)	225
Radio	50–200
Refrigerator	700
Slow cooker	200
Submersible pump (1 hp)	2000
Submersible pump (1/2 hp)	1500
Submersible pump (1-1/2 hp)	2800
Sump pump	800–1050
Table saw (10-inch)	1750–2000
Television	200–500
Toaster	1000–1650

Dimensions

Approximate Dimensions in Inches (mm)

Air-Cooled Standby

Catalog Number	Length	Width	Height	Weight in Lbs (kg)
EGENX8	48.00 (1219.2)	25.00 (635.0)	29.00 (736.6)	360 (163.0)
EGENX11A	48.00 (1219.2)	25.00 (635.0)	29.00 (736.6)	373 (169.2)
EGENX16A	48.00 (1219.2)	25.00 (635.0)	29.00 (736.6)	437 (198.2)
EGENX20A	48.00 (1219.2)	25.00 (635.0)	29.00 (736.6)	451 (204.6)
EGENX22A	48.00 (1219.2)	25.00 (635.0)	29.00 (736.6)	476 (216.0)

Liquid-Cooled Standby

Catalog Number	Length	Width	Height	Weight in Lbs (kg)
EGEN22	62.00 (1574.8)	29.00 (736.6)	34.00 (863.6)	895 (406.3)
EGEN25	63.00 (1600.2)	30.00 (762.0)	35.00 (889.0)	875 (397.3)
EGEN27	64.00 (1625.6)	31.00 (787.4)	36.00 (914.4)	891 (404.5)
EGEN30	60.00 (1651.0)	32.00 (812.8)	37.00 (939.8)	935 (424.5)
EGEN36	77.00 (1955.8)	34.00 (863.6)	45.00 (1143.0)	1683 (764.1)
EGEN45	78.00 (1981.2)	35.00 (889.0)	46.00 (1168.4)	1414 (642.0)
EGEN48	79.00 (2006.6)	36.00 (914.4)	47.00 (1193.8)	1703 (773.2)
EGEN60 ④	80.00 (2032.0)	37.00 (939.8)	48.00 (1219.2)	1650 (749.1)
EGEN70 ④	97.00 (2463.8)	37.00 (939.8)	48.00 (1219.2)	2185 (992.0)
EGEN80 ④	115.00 (2921.0)	36.80 (934.7)	79.00 (2006.6)	2010 (912.5)
EGEN100 ④	116.00 (2946.4)	36.80 (934.7)	80.00 (2032.0)	2705 (1228.1)
EGEN130 ④	117.00 (2971.8)	36.80 (934.7)	81.00 (2057.4)	2873 (1304.3)
EGEN150 ④	118.00 (2997.2)	36.80 (934.7)	82.00 (2082.8)	2666 (1210.4)

Notes

① The rated wattage of lights can be taken from light bulbs. The rated wattage of tools, appliances and motors can usually be found on a data plate or decal affixed to the device.

② If the appliance, tool or motor does not give wattage, multiply 120 volts times the ampere rating to determine watts (volts x amps = watts) for single-phase only.

③ Some electric motors (induction types) require about three times more watts of power for starting than for running. This surge lasts for only a few seconds. Be sure you allow for this high starting wattage when selecting electrical devices that will be energized by the backup power system:
Figure the watts required to start the largest motor.
Add that to the total running watts of all other connected loads.

④ All weights provided for steel enclosures only.

EGENP8000EX

Contents

Description	*Page*
Portable Generators	
Product Selection	**V1-T3-8**
Dimensions	**V1-T3-10**

Product Description

Whereas permanently installed standby systems are designed for larger homes, small businesses or secondary residences, portable generators are primarily used for smaller homes, essential loads, construction sites, camping, tailgating and wherever portable temporary power is required.

Application Description

Portable generator systems are primarily used for smaller homes or for construction sites where temporary power is required. Permanently installed standby systems are designed for larger homes, small businesses or secondary residences, such as vacation homes and cabins, that require uninterrupted power for critical loads.

As the name indicates and due to physical size and weight, portable generators can easily be transported from one location to another.

Designed for outdoor use only, common applications vary from homes to camping to construction sites, providing backup power everywhere electrical power is needed.

Standards and Certifications

- UL Listed

UL Listed

Catalog Number Selection

Portable Generators

EGEN P 8000 E X

Eaton generator

Type
P = Portable

Power Output
5500 = 5.5 kW
6500 = 6.5 kW
7000 = 7.5 kW
8000 = 8 kW
15000 = 15 kW
17500 = 17.5 kW

Startup Method
Blank = Manual/recoil only
E = Electric and/or manual/recoil

Model
Blank = General purpose
CA = General purpose "CARB" compliant (CA only)
X = XG Series

Product Selection

Portable Generators

	Running Watts	Starting Watts	Engine Displacement/ Type	Startup Method	Fuel Tank Capacity (gal) ①	Approx. Running Time at 1/2 load (hrs)	Battery Included	Outlets Configuration	Warranty Residential/ Commercial (yrs)	Catalog Number
General Purpose (49-State)										
EGENP5500	5500	6875	389 cc/OHV	Manual	7.2	10	No	1 x 30 A L14-30R (twist lock), 2 x 20 A 5-20R duplex	2/1 Ltd	**EGENP5500**
EGENP6500	6500	8125	389 cc/OHV	Manual	7.2	10	No	1 x 30 A L14-30R (twist lock), 2 x 20 A 5-20R duplex	2/1 Ltd	**EGENP6500**
EGENP6500E	6500	8125	389 cc/OHV	Manual/ electric	7.2	10	Yes	1 x 30 A L14-30R (twist lock), 2 x 120 A 5-20R duplex	2/1 Ltd	**EGENP6500E**
EGENP7500E	7500	9375	420 cc/OHV	Manual/ electric	8.0	12	Yes	1 x 30 A L14-30R (twist lock), 2 x 20 A 5-20R duplex	2/1 Ltd	**EGENP7500E**
EGENP15000E	15000	22500	992 cc/OHVI	Manual/ electric	16.0	12	Yes	1 x 50 A 14-50R, 1 x 30 A L14-30R (twist lock), 2 x 30 A L5-30R (twist lock), 1 x 20 A 5-20R duplex, 1 x 20 A GFCI 5-20R duplex	2/1 Ltd	**EGENP15000E**
EGENP17500E	17500	26250	992 cc/OHVI	Manual/ electric	16.0	10	Yes	1 x 50 A 14-50R, 1 x 30 A L14-30R (twist lock), 1 x 30 A L5-30R (twist lock),1 x 20 A 5-20R duplex, 1 x 20 A 5-20R GFCI duplex	2/1 Ltd	**EGENP17500E**

Note

① Requires gasoline as fuel to operate.

Portable Generators, continued

	Running Watts	Starting Watts	Engine Displacement/ Type	Startup Method	Fuel Tank Capacity (gal) ①	Approx. Running Time at 1/2 load (hrs)	Battery Included	Outlets Configuration	Warranty Residential/ Commercial (yrs)	Catalog Number
XG Series										
EGENP7000EX	7000	8750	407 cc/OHVI	Manual/ electric	9	10	Yes	1 x 30 A L14-30R (twist lock), 2 x 20 A GFCI 5-20R duplex	2/1 Ltd	**EGENP7000EX**
EGENP8000EX	8000	10000	407 cc/OHVI	Manual/ electric	10	10	Yes	1 x 30 A L14-30R (twist lock), 2 x 20 A GFCI 5-20R duplex	2/1 Ltd	**EGENP8000EX**
EGENP10000EX	10000	12500	530 cc/OHVI	Manual/ electric	10	10	Yes	1 x 50 A 14-50R, 1 x 30 A L14-30R (twist lock), 1 x 30 A L5-30R (twist Lock), 2 x 20 A GFCI 5-20R duplex	2/1 Ltd	**EGENP10000EX**
CARB ② Compliant (Required in California Only)										
EGENP5500CA	5500	6875	389 cc/OHV	Manual	7.2	10	No	1 x 30 A L14-30R (twist lock), 2 x 20 A GFCI 5-20R duplex	2/1 Ltd	**EGENP5500CA**
EGENP6500CA	6500	8125	389 cc/OHV	Manual	7.2	10	No	1 x 30 A L14-30R (twist lock), 2 x 120 A 5-20R duplex	2/1 Ltd	**EGENP6500CA**

Notes

① Requires gasoline as fuel to operate.

② California Air Resources Board.

Dimensions

Approximate Dimensions in Inches (mm)

Portable Generators

Catalog Number	Length	Width	Height	Weight Lbs (kg)
EGENP5500	27.25 (692.2)	27.00 (685.8)	25.00 (635.0)	171.0 (77.6)
EGENP6500	27.25 (692.2)	27.00 (685.8)	25.00 (635.0)	175.0 (79.5)
EGENP6500E	27.25 (692.2)	27.00 (685.8)	25.00 (635.0)	186.0 (84.4)
EGENP7500E	27.25 (692.2)	27.00 (685.8)	25.00 (635.0)	191.5 (86.9)
EGENP15000E	48.50 (1231.9)	31.00 (787.4)	39.50 (1003.3)	363.0 (164.8)
EGENP17500E	48.50 (1231.9)	31.00 (787.4)	39.50 (1003.3)	390.0 (177.1)
EGENP7000EX	31.00 (787.4)	25.50 (647.7)	28.00 (711.2)	245.0 (111.2)
EGENP8000EX	31.00 (787.4)	25.50 (647.7)	28.00 (711.2)	235.0 (106.7)
EGENP10000EX	30.00 (762.0)	29.50 (749.3)	31.00 (787.4)	300.0 (136.2)
EGENP5500CA	27.25 (692.2)	27.00 (685.8)	25.00 (635.0)	170.9 (77.6)
EGENP6500CA	27.25 (692.2)	27.00 (685.8)	25.00 (635.0)	177.0 (80.3)

Residential Automatic Transfer Switches

Contents

Description	*Page*
Automatic Transfer Switches	
Standards and Certifications	**V1-T3-12**
Catalog Number Selection	**V1-T3-12**
Product Selection	**V1-T3-13**
ATS Ready Loadcenter	**V1-T3-14**
Dimensions	**V1-T3-15**

Product Description

50, 100, 150, 200 and 400 A Fully Automatic

All Eaton automatic transfer switches (ATS) monitor utility and generator voltages and will automatically connect to the appropriate source of power. Eaton offers two types of automatic transfer switches to suit your personal backup power needs—the standard ATS EGSX series with load shedding capabilities and the Green ATS EGSU series that provides a truly active load management solution.

Green Line of Automatic Transfer Switches

With the rising cost of commodities and fuel in today's economy, consumers are concerned with maximizing the value of their purchases.

Electrical loads are now intelligently managed with Eaton's Green Line of automatic transfer switches. The active load management inside each Green ATS allows the consumer to use 100% of the power rated output of the generator and/or use a smaller generator, reducing upfront installation costs and saving on ongoing fuel consumption costs.

As a part of Eaton's commitment to quality, every Green ATS, at no extra cost, will ship with a CHSPT2ULTRA whole surge protector, which will help prevent potential damage to valued electronics caused by power surges in the utility line.

Application Description

50, 100, 150, 200 and 400 A Switches

100, 200 and 400 A switches are capable of "whole house" power transfer in residential/small business applications.

50 A—Indoor Installation—Selected Load Pre-Wired

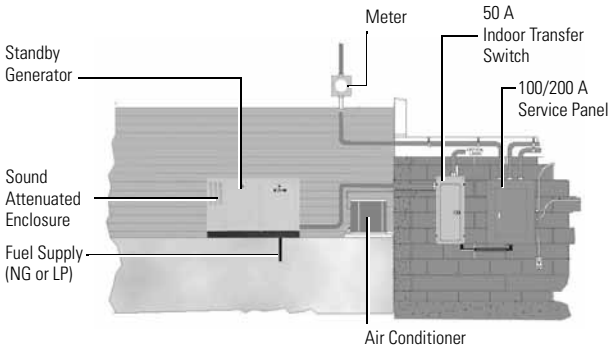

100/200 A—Outdoor Installation—Whole House Pre-Wired

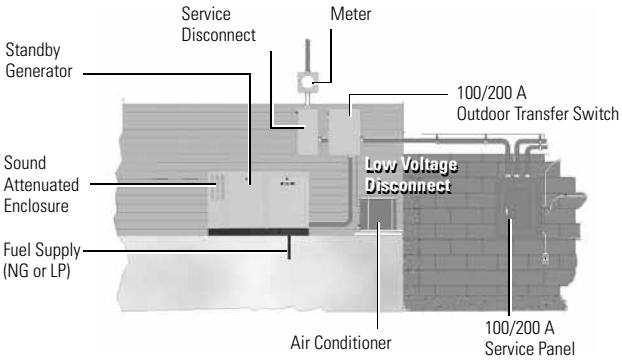

Standards and Certifications

- UL 1008 listed

Listed

Catalog Number Selection

Standard Automatic Transfer Switches—EGSX Series

E GSX 200 __ NSEA

Manufacturer
Eaton

Type
Generator transfer switch EGSX Series

Ampere Rating
50 = 50 A
100 = 100 A
150 = 150 A
200 = 200 A
400 = 400 A

Loadcenter (CH Type, Integral)
Blank = None
L12 = 12 circuits N1
L12R = 12 circuits N3R
L24R = 24 circuits N3R

Service Entrance Rated
NSEA = Service entrance (normal source only)
A = Non-service entrance

Green Automatic Transfer Switches—EGSU Series

E GSU 200 __ NSE ACA

Manufacturer
Eaton

Type
Generator universal transfer switch EGSU "Green" Series

Ampere Rating
100 = 100 A
150 = 150 A
200 = 200 A
400 = 400 A

Loadcenter (CH Type, Integral)
Blank = None
L24 = 24 circuits

Service Entrance Rated
NSE = Service entrance (normal source only)
Blank = Non-service entrance

Load Management
ACA = Active load management

Product Selection

EGSX50L12R

Standard Automatic Transfer Switches ①

Ampere Rating	Voltage	Service Entrance Rated	No. of Load Shed Contacts	Contactor Wire Size Range(s)	No. of Cables per Phase	Withstand Current (rms) at 240 Vac	No. of Circuits Included ②	Frequency (Hz)	Enclosure Type	Most Common Generator Sizes (kW) ③	Catalog Number
50	120/240	No	2	#14–#6	1	5000	12	50/60	NEMA 1 (indoor)	8, 11	**EGSX50L12**
50	120/240	No	2	#14–#6	1	5000	12	50/60	NEMA 3R (outdoor)	8, 11	**EGSX50L12R**
100	120/240	No	2	#14–#2/0	1	10,000	—	50/60	NEMA 3R (outdoor)	8, 11, 16	**EGSX100A**
100	120/240	Yes	2	#14–#2/0	1	25,000	—	50/60	NEMA 3R (outdoor)	8, 11, 16	**EGSX100NSEA**
100	120/240	No	2	#14–#2/0	1	10,000	24	50/60	NEMA 3R (outdoor)	8, 11, 16	**EGSX100L24RA**
150	120/240	Yes	2	#4–300 kcmil	1	25,000	—	50/60	NEMA 3R (outdoor)	16, 20, 22	**EGSX150NSEA**
200	120/240	No	2	#4–300 kcmil	1	10,000	—	50/60	NEMA 3R (outdoor)	16, 20, 22	**EGSX200A**
200	120/240	Yes	2	#4–300 kcmil	1	25,000	—	50/60	NEMA 3R (outdoor)	16, 20, 22	**EGSX200NSEA**
400	120/240	Yes	2	750 kcmil–2 300 kcmil–1/0	1/2	35,000	—	50/60	NEMA 3R (outdoor)	>22	**EGSX400NSEA**

EGSU200NSEACA

Green Automatic Transfer Switches ④—Featuring Active Load Management Technology

Ampere Rating	Voltage	Service Entrance Rated	Contactor Wire Size Range(s)	No. of Cables per Phase	Withstand Current (rms) at 240 Vac	No. of Circuits Included ②	Frequency (Hz)	Enclosure Type	Most Common Generator Sizes (kW) ③	Catalog Number ⑤
100	120/240	No	#14–#2/0	1	10,000	—	50/60	NEMA 3R (outdoor)	8, 11, 16	**EGSU100ACA**
100	120/240	Yes	#14–#2/0	1	25,000	—	50/60	NEMA 3R (outdoor)	8, 11, 16	**EGSU100NSEACA**
100	120/240	No	#14–#2/0	1	10,000	24	50/60	NEMA 3R (outdoor)	8, 11, 16	**EGSU100L24RACA**
150	120/240	Yes	#4–300 kcmil	1	25,000	—	50/60	NEMA 3R (outdoor)	16, 20, 22	**EGSU150NSEACA**
200	120/240	No	#4–300 kcmil	1	10,000	—	50/60	NEMA 3R (outdoor)	16, 20, 22	**EGSU200ACA**
200	120/240	Yes	#4–300 kcmil	1	25,000	—	50/60	NEMA 3R (outdoor)	16, 20, 22	**EGSU200NSEACA**
400	120/240	Yes	750 kcmil–2 300 kcmil–1/0	1/2	35,000	—	50/60	NEMA 3R (outdoor)	>22	**EGSU400NSEACA**

Notes

① Standard ATS "EGSX" Series compatible with Eaton generators only.
② Uses CH type circuit breakers.
③ For reference only. Generator size must be determined with proper/actual load calculations.
④ UNIVERSAL ATS: compatible with any single-phase, 120/240 V generator brand.
⑤ Whole house surge Cat. No. CHSPT2ULTRA included in every Green ATS "EGSU" Series.

ATS Ready Loadcenter

From the far-reaching power failures brought on by hurricanes and snow/ice storms, to the increasing power outage concerns and an aging electrical infrastructure, backup power is more important than ever. Eaton's ATS Ready loadcenter addresses future backup power needs by enabling a fast, efficient installation of an automatic transfer switch kit to convert from utility power to generator power.

The ATS Ready loadcenter gives homebuilders and electrical contractors the flexibility to install a generator ready system or to install a loadcenter and easily add an ATS in the future. Backup power had never been that versatile before.

ATS Ready Loadcenter Features

- CH Premium Type 200 A single-phase MCB 36-circuit loadcenter
- 50 A ATS "EGSX" type kit for factory or field installation (compatible with Eaton generators only)
- 22 circuits for non-essential loads and 14 circuits for essential backup power loads
- Versatile, space-saving design
- For use with 8 or 11 kW air-cooled generators
- CH cover included
- Lifetime warranty on CH loadcenter and breakers
- NEMA 1 design
- UL Listed

ATS Ready Loadcenter

	Description	Catalog Number
CH36B200EGP	ATS Ready loadcenter Kit CHEGSX50KIT must be ordered separately Loadcenter only. Includes provision for ATS kit	**CH36B200EGP**
CHEGSX50KIT	ATS "EGSX" kit for ATS Ready loadcenter Field-installable automatic transfer switch kit ATS Ready loadcenter CH36B200EGP must be ordered separately Intuitive, easy installation Compatible with Eaton generators only	**CHEGSX50KIT**
CH36B200EGPK	ATS Ready LC with factory-installed ATS kit Factory assembled Compatible with Eaton generator only. Generator needed to complete backup power system Recommended Eaton generators models: 8/7 kW–Catalog #EGENX8 11/10 kW–Catalog #EGENX11A	**CH36B200EGPK**

Dimensions

Approximate Dimensions in Inches (mm)

Automatic Transfer Switches

Catalog Number	Width	Height	Depth	Weight Lbs (kg)
EGSX50L12	14.25 (362.0)	21.00 (533.4)	4.00 (101.6)	25 (11.33)
EGSX50L12R	14.25 (362.0)	21.00 (533.4)	6.00 (152.4)	29 (13.15)
EGSX100A	14.46 (367.3)	16.87 (428.5)	5.32 (135.1)	25 (11.33)
EGSX100NSEA	14.46 (367.3)	16.87 (428.5)	5.32 (135.1)	28 (12.70)
EGSX100L24RA	14.46 (367.3)	29.33 (744.0)	5.32 (135.1)	38 (17.24)
EGSX200A	14.46 (367.3)	25.08 (637.0)	5.25 (133.4)	35 (15.87)
EGSX150NSEA	14.46 (367.3)	29.20 (741.7)	5.32 (135.1)	45 (20.41)
EGSX200NSEA	14.46 (367.3)	29.20 (741.7)	5.32 (135.1)	45 (20.41)
EGSU100L24RACA	14.46 (367.3)	29.33 (745.0)	5.32 (135.1)	38 (17.24)
EGSU100ACA	14.46 (367.3)	16.87 (428.5)	5.32 (135.1)	25 (11.33)
EGSU100NSEACA	14.46 (367.3)	16.87 (428.5)	5.32 (135.1)	28 (12.70)
EGSU150NSEACA	14.46 (367.3)	29.20 (741.7)	5.32 (135.1)	45 (20.41)
EGSU200ACA	14.46 (367.3)	25.08 (637.0)	5.25 (133.4)	35 (15.88)
EGSU200NSEACA	14.46 (367.3)	29.20 (741.7)	5.32 (135.1)	45 (20.41)
EGSU400NSEACA	23.14 (587.8)	35.55 (903.0)	10.00 (254.0)	120 (54.43)
CH36B200EGPK	14.31 (363.5)	47.50 (1206.5)	3.88 (98.6)	40 (18.14)

All Panels are Manufactured in the USA and Meet UL 1008

Contents

Description	*Page*
Manual Transfer Switches	
Standards and Certifications	**V1-T3-17**
Reference Information	**V1-T3-17**
Product Selection	**V1-T3-18**
Technical Data and Specifications	**V1-T3-19**
Dimensions	**V1-T3-19**

Learn Online

Product Description

A manual transfer switch is a device that is mounted next to the loadcenter (distribution panel) in the home or small business. The manual transfer switch is used in conjunction with a portable backup power generator and serves the purpose of turning selected circuits on and off during a power outage. The transfer switch panel allows the owner to start up a generator to restore power to critical circuits when utility power is not available.

The owner designates which circuits are critical, such as the refrigerator and certain lights. Sometimes called emergency power panels or emergency generator panels, manual transfer switch panels provide the homeowner or small business owner with a safe and easy way to continue using electrical appliances when the utility power is unavailable temporarily.

Application Description

Manual transfer switches are most often used in residential, agricultural and light commercial applications. Comfort and safety are key concerns of many homeowners who are dependent on an uninterrupted supply of electricity.

The increase in our dependence on power is due in part to the popularity of home offices and in-home health care. Various heavily populated regions of the United States experience periodic power outages due to extreme weather conditions, such as ice and snowstorms, heat waves, tornadoes or hurricanes. These regions that include the Pacific Northwest, Atlantic Coast and the Gulf Coast are the strongest markets for portable generators and manual transfer switches.

Features, Benefits and Functions

Eaton offers two manual transfer switch backup power solutions:

- Manual transfer switches
- Generator panels

Manual Transfer Switches

- Panel and components sold separately
- Hardwired generator connection
- Ideal for new construction/ larger loads
- Sturdy copper bus construction
- Uses CH and CHT circuit breaker types (sold separately)
- Mechanically interlocked main disconnects to prevent paralleling of normal and emergency power source
- Indoor and outdoor designs available

Manual Transfer Switch Indoor Design

Manual Transfer Switch Indoor/Outdoor Design

Generator Panels

- Mechanically interlocked main disconnects prevent paralleling of normal and emergency power source
- Panel and components sold separately
- Integral plug-in generator connection (power inlet box)
- All circuit breakers are included—switching duty rated
- Includes dual wattmeters for load balancing
- Indoor and outdoor designs available

Generator Panel Indoor Design

Generator Panel Outdoor Design

Standards and Certifications

- UL 67 listed
- UL 1008 listed

Listed

Reference Information

Cross-Reference

Watts	Number of Circuits	Ampere Rating	Catalog Number Eaton	Gen/Tran ①	EmerGen ①	Square D	Generac ②
5000	4–8	30	**CH48GEN3060R**	—	—	QO48M30DSGP	—
15,000	8–16	60	**CH816GEN6060**	—	—	QO48M60DSGP	—
5000	6	20	**CH6EGEN2060**	20216	6-5000	—	—
5000	6	20	**CH6EGEN2060R**	R20216	6-5000 + RTE657	—	—
5000	6	20	**CH6EGEN2060SU**	—	—	—	—
5000	6	20	**CH6EGEN2060RSU**	—	—	—	—
7500	10	30	**CH10EGEN3060**	302110-20	10-7500	—	—
7500	10	30	**CH10EGEN3060R**	R30211-20	10-7500 + RTE1075	—	—
7500	10	30	**CH10EGEN3060SUR**	—	—	—	—
7500	10	30	**CH10EGEN3060RSU**	—	—	—	—
7500	10	30	**CH10GEN5030SN**	—	—	—	—
7500	10	30	**CH10GEN5030RSN**	—	—	—	—
12,000	10	50	**CH10GEN5050SN**	—	—	—	—
12,000	10	50	**CH10GEN5050RSN**	—	—	—	—

Notes

① Gen/Trans device is not supplied with a power cord.

② Generac device is 7200 maximum watts on six-circuit device and 12,000 maximum watts on 10-circuit device.

Product Selection

Manual Transfer Switches and Generator Panels Selection

Enclosure Type	Watts	Number of Circuits	Ampere Rating	Main/ Emergency Ampere Rating	Feeder Breakers	Included Accessories	Catalog Number
Standard Manual Transfer Switch							
NEMA 3R	5000	4–8	30	Provision	Provision	None	**CH48GEN3060R**
NEMA 1	10,000	8–16	60	Provision	Provision	None	**CH816GEN6060**
Generator Panel							
NEMA 1	5000	6	20	60/20	5–1P151–1P20	None	**CH6EGEN2060**
NEMA 3R	5000	6	20	60/20	5–1P151–1P20	None	**CH6EGEN2060R**
NEMA 1	5000	6	20	60/20	5–1P151–1P20	Two-pole surge protector	**CH6EGEN2060SUR**
NEMA 3R	5000	6	20	60/20	5–1P151–1P20	Two-pole surge protector	**CH6EGEN2060RSU**
NEMA 1	7500	10	30	60/30	6–1P152–1P2012P30	None	**CH10EGEN3060**
NEMA 3R	7500	10	30	60/30	6–1P152–1P2012P30	None	**CH10EGEN3060R**
NEMA 1	7500	10	30	60/30	7–1P152–1P2012P30	Two-pole surge protector	**CH10EGEN3060SUR**
NEMA 3R	7500	10	30	60/30	7–1P152–1P2012P30	Two-pole surge protector	**CH10EGEN3060RSU**
Switched Neutral Manual Transfer Switch							
NEMA 1	7500	10	30	50/30	6–1P15, 2–1P20, 1–2P30	None	**CH10GEN5030SN**
NEMA 3R	7500	10	30	50/30	6–1P15, 2–1P20, 1–2P30	None	**CH10GEN5030RSN**
NEMA 1	12,000	10	50	50/50	6–1P15, 2–1P20, 1–2P30	None	**CH10GEN5050SN**
NEMA 3R	12,000	10	50	50/50	6–1P15, 2–1P20, 1–2P30	None	**CH10GEN5050RSN**

Power Inlet Boxes

Description	Ampere Rating	Voltage	Catalog Number
Flush flange kit (for use with generator panel only)	—	120/240 V	**CHEGENFKIT**
Power inlet box	20	120/240 V	**EGSPIB20**
Power inlet box	30	120/240 V	**EGSPIB30**
Power inlet box	50	120/240 V	**EGSPIB50**

Warranty

Manual Transfer Switch

- 15-year loadcenter warranty
- Lifetime branch breaker warranty

Generator Panel

- 15-year loadcenter warranty
- Lifetime branch breaker warranty

Technical Data and Specifications

- 10,000 AIC rating
- Switching devices must be circuit breakers
- Manual transfer switch must be supplied with neutral and ground
- Power inlet box must be connected to a circuit breaker for generator protection

Installation Diagrams

Manual Transfer Switches—Indoor Installation Diagram

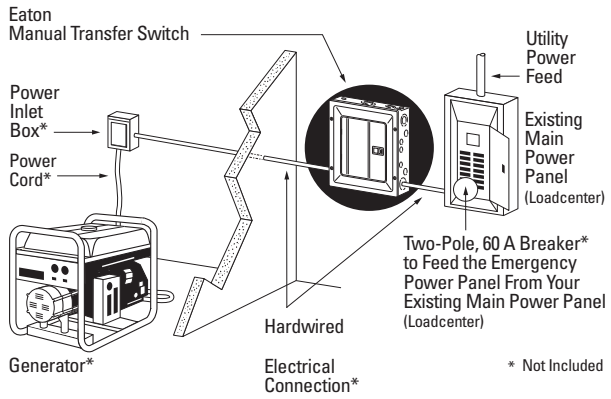

Generator Panels—Indoor Installation Diagram

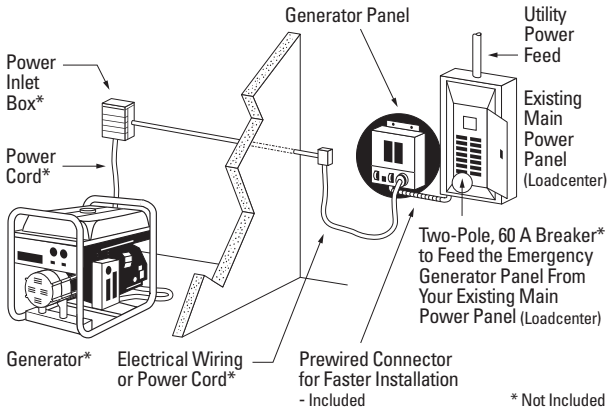

Manual Transfer Switches—Outdoor Installation Diagram

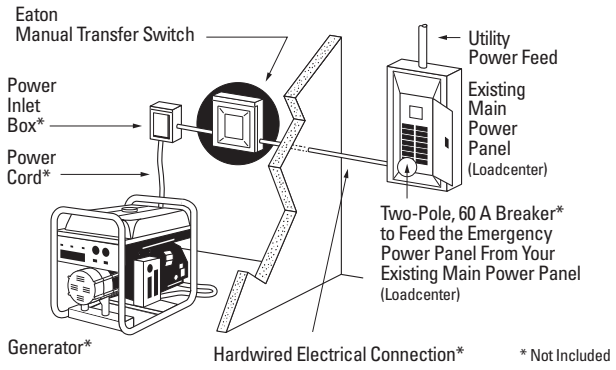

Generator Panels—Outdoor Installation Diagram

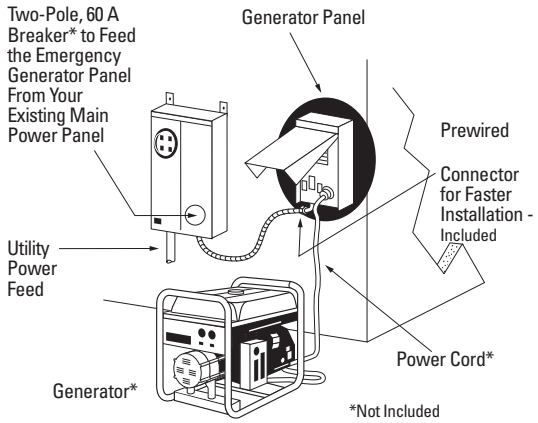

Dimensions

Approximate Dimensions in Inches (mm)

Manual Transfer Switch

Enclosure Type	Height	Width	Depth	Weight Lbs (kg)
NEMA 1	16.75 (425.5)	14.31 (363.5)	3.88 (98.5)	25 (11)
NEMA 3R	13.00 (330.2)	11.00 (279.4)	3.56 (90.4)	14 (6)

Generator Panel

Enclosure Type	Height	Width	Depth	Weight Lbs (kg) 6-Circuit	Weight Lbs (kg) 10-Circuit
NEMA 1	13.23 (336.0)	11.41 (289.8)	4.10 (104.1)	24 (11)	26 (12)
NEMA 3R	17.12 (434.8)	9.45 (240.0)	7.16 (181.9)	29 (13)	31 (14)

Group Metering and
Meter Breaker Family

4.1 Single Meter Sockets
Product Description V1-T4-2

4.2 Commercial Lever Bypass Sockets
Product Description V1-T4-10

4.3 Multiple Position Horizontal Ganged Sockets
Product Description V1-T4-18

4.4 Instrument Rated Sockets
Product Description V1-T4-25

4.5 Residential Pedestals
Product Description V1-T4-27

4.6 Accessories and Cross-Reference
Product Description V1-T4-29

4.7 Mechanical Lugs
Product Description V1-T4-34

4.8 Communications Grounding Device (NEC 250.94)
Product Description V1-T4-35

4.9 Meter Breakers
Residential Meter Breakers V1-T4-37
Non-EUSERC Combination Service Entrance Devices 100–200 A Styles V1-T4-39
Meets EUSERC Requirements Service Entrance Devices 100–225 A . V1-T4-48
West Coast All-In-One Design V1-T4-59
Mechanical Interlock Cover V1-T4-65
House Panels V1-T4-75
Commercial Safety Sockets V1-T4-83
CH Style Renovation Solutions V1-T4-86
Aluminum Meter Breakers V1-T4-87

4.10 Group Metering
Systems for Residential and Commercial Applications V1-T4-88
Meter Packs V1-T4-90
Type CCV 120/240 V Tenant Main Circuit Breaker V1-T4-95
Type CV 120/240 V Tenant Main Circuit Breaker V1-T4-96
Meter Packs—1MP, 1MM and 3MM Main Tenant Circuit Breakers . . . V1-T4-98
Main Service Modules V1-T4-101
Surge Metering V1-T4-115
Group Metering Inline Current Transformer Cabinets V1-T4-116
Residential Meter Stacks V1-T4-118
1MP, 1MM and 3MM Main Tenant Circuit Breakers V1-T4-127
Phase Balanced Stack V1-T4-128
Commercial Meter Stack Modules V1-T4-129
35MM, 37MM, 35SS and 37SS Main Tenant Circuit Breakers V1-T4-136

Learn
Online

Single Meter Sockets

Contents

Description	*Page*
Features and Benefits	**V1-T4-3**
Catalog Number Selection	**V1-T4-3**
Product Selection	**V1-T4-4**
Dimensions	**V1-T4-8**

Product Description

Single-Phase Three-Wire and Three-Phase Four-Wire 600 Vac Single Meter Sockets

All Eaton sockets are rated 600 Vac maximum and either 100, 200 or 320 A continuous. All have a minimum short-circuit rating of 10,000 rms symmetrical amperes (watthour meter is not included in rating).

All single meter sockets are UL labeled and are supplied in surface mounted outdoor enclosures. Confirm local utility acceptance prior to order entry.

Features and Benefits

Single Meter Sockets

Features	Benefits
Block assembly base exceeds 400 in-lbs of torque	Provides durability under the most extreme installation circumstances
One-piece, die-run enclosure	Eliminates tampering and extends product life
High visibility Eaton name embossed on cover	Company identity and brand preference
Knockouts are installer friendly	Labor savings, less time needed for removing knockouts
Oversized 7/8-inch diameter, heavy-duty, steel lug screws	Stronger connection component facilitates a reliable wire termination
Slide-nuts are captive	Allow for ease in installation of conductors and eliminates lost components
Horn bypass kit is field installable by changing out slide nut	Less inventory required and field modifications are simple
Integral triplex or quadplex ground extruded in neutral lug	One piece for terminating incoming/outgoing neutral conductors, which increases integrity of connections
100% plated bridge with 4-point mounting	Zinc chromate plated to provide superior corrosion resistance
kAIC rating	Tested and UL listed up to 200 kAIC rating with specified overcurrent protection devices
Provides a complete Eaton residential solution	Adding meter sockets to the already existing (loadcenter, surge, breakers, generators and AC disconnect) product lines that we already provide, makes Eaton a one-stop shop for our customers residential and light commercial needs
Copper-plated alloy jaws with reinforcing spring	Steel reinforcing springs used in all socket jaws to maintain electrical connections

Catalog Number Selection

Single Meter Sockets RS Group

UT RS 2 0 2 B CH

Note: The "U" prefix is always used first followed by other prefixes required in alphabetical order.

Standard Prefixes

- **A** = Aluminum enclosure
- **B** = Barrel lock provision, for an exposed INNER-TITE® or Brooks barrel lock; unit includes an internal lock receiver bracket
- **F** = Barrel Lock with guard provision, for a lock guard INNER-TITE or Brooks barrel lock; unit includes an internal lock receiver bracket
- **G** = Grounded fifth terminal (9 o'clock position)
- **H** = Horn bypass
- **I** = Inhibitor installed in wire connectors
- **M** = Temporary meter cover (waxed cardboard)
- **N** = No sealing ring (applies only to ring style sockets)
- **R** = Ring style socket
- **S** = Aluminum screw type sealing ring (applies only to ring style sockets)
- **T** = Grounding connector (#14–#2 Cu) for triplex ground
- **TT** = Two grounding connectors (#14–#2 Cu) for quadplex ground
- **U** = UL Underwriters Laboratories label
- **Z** = 5/16-inch hex head connector screw in place of slotted (100 A only)

Product Group

- **RS** = Residential service, single position
- **2R-6R** = Residential service, multiple position
- **2H-6H** = Commercial or residential service, multiple position
- **H** = Commercial or residential service, single position

Ampere Rating

- **1** = 100 A
- **2** = 200 A
- **5** = 150 A

Service Design

- **0** = Overhead
- **1** = Combination overhead/underground
- **2** = Underground, side wired
- **3** = Combination overhead/underground, side wired

Maximum Conductor (Line and Load)

- **0** = 0.38-inch stud connectors
- **1** = #2/0 connectors
- **2** = #250 kcmil connectors
- **3** = #350 kcmil connectors

Standard Suffixes

- **A** = Solid top
- **B** = Small hub opening
- **C** = Small hub closing plate mounted
- **L** = 1.25-inch (31.8 mm) hub mounted
- **M** = 1.50-inch (38.1 mm) hub mounted
- **N** = 2.00-inch (50.8 mm) hub mounted
- **P** = 2.50-inch (63.5 mm) hub mounted
- **T** = Large hub opening hub
- **U** = Large hub cover plate hub mounted
- **V** = 2.50-inch (63.5 mm) large hub mounted
- **Q** = 3.00-inch (76.2 mm) large hub mounted
- **R** = 3.50-inch (88.9 mm) large hub mounted
- **S** = 4.00-inch (101.6 mm) large hub mounted
- **Z** = Large to small hub adapter mounted

Product Selection

URS212ACH

Residential Ringless Type Cover

Ampere Rating	Jaws	Service	Bypass	Connections Line	Load	Opening, Hub or Closure Plate	Catalog Number
200	4	UG	—	3/8-inch studs	3/8-inch studs	Solid top	**UTRS240ACH**
200	4	OH/UG	—	3/8-inch studs	3/8-inch studs	3-5/16 hub cover plate	**UTRS2303CCH**
200	4	UG	—	#8–350 kcmil	#8–350 kcmil	Solid top	**UTRS223ACH**
200	4	UG	—	3/8-inch studs	3/8-inch studs	Solid top	**UTRS220ACH**
200	4	OH/UG	—	#8–350 kcmil	#8–350 kcmil	3-5/16 cover plate	**UTRS213CFLCH**
200	4	OH/UG	—	#8–350 kcmil	#8–350 kcmil	3-5/16 hub cover plate	**UTRS213CEPCH**
200	4	OH/UG	—	#6–350 kcmil	#6–350 kcmil	3-5/16 hub cover plate	**UGTRS213CE**
200	4	OH/UG	—	#6–350 kcmil	#6–350 kcmil	3-5/16 hub cover plate	**UTRS213CE**
200	4	OH/UG	—	#6–350 kcmil	#6–350 kcmil	3-5/16 hub opening	**UATRS213BCH**
200	4	OH/UG	—	#6–350 kcmil	#6–350 kcmil	3-5/16 hub opening	**URS213BCH**
200	4	OH/UG	—	#6–350 kcmil	#6–350 kcmil	3-5/16 hub opening	**UTRS213BE**
200	4	UG	—	#8–350 kcmil	#8–350 kcmil	Solid top	**UTRS213AFLCH**
200	4	UG	—	#8–350 kcmil	#8–350 kcmil	Solid top	**UTRS213ACH**
200	4	OH/UG	Horn	#8–350 kcmil	#8–350 kcmil	3-5/16 hub opening	**UTRS2138BCH**
200	4	OH/UG	—	#8–250 kcmil	#8–250 kcmil	Solid top	**UTRS212ACH**
200	4	OH/UG	—	#8–250 kcmil	#8–250 kcmil	3-5/16 cover plate	**UTRS212CCH**
200	4	OH/UG	—	#8–250 kcmil	#8–250 kcmil	3-5/16 cover plate	**UTRS212CFLCH**
200	4	OH/UG	—	#8–250 kcmil	#8–250 kcmil	3-5/16 hub opening	**UTRS212BCH**
200	4	OH	—	#8–250 kcmil	#8–250 kcmil	2-inch bolt-on hub	**UTRS202NCH**
200	4	OH	—	#8–250 kcmil	#8–250 kcmil	Small hub opening	**UATRS202BFLCH** ①
200	4	OH/UG	—	#8–250 kcmil	#8–250 kcmil	3-5/16 cover plate	**UTRS232CCH**
200	4	OH	—	#8–2/0 cu/al	#8–2/0 cu/al	3-5/16 hub opening	**UTRS202BCH**
200	4	OH/UG	—	#8–250 kcmil	#8–250 kcmil	Solid top	**URS212ACH**
200	4	OH	—	#8–250 kcmil	#8–250 kcmil	2-inch bolt-on hub	**URS202NCH**
200	5	OH	Horn	#8–250 kcmil	#8–250 kcmil	3-5/16 hub opening	**URS202BDQCH**
200	4	OH/UG	Horn	#8–350 kcmil	#8–350 kcmil	3-5/16 hub cover plate	**UFHTRS213CCH** ②
200	4	OH/UG	Horn	#8–350 kcmil	#8–350 kcmil	3-5/16 hub opening	**UHTTRS213BCH**
200	4	OH/UG	Horn	#8–350 kcmil	#8–350 kcmil	3-5/16 hub cover plate	**UHTTRS213CCH**
200	4	OH	Horn	#8–250 kcmil	#8–250 kcmil	3-5/16 hub opening	**UHTTRS202BCH**
200	5	OH/UG	Horn	#8–350 kcmil	#8–350 kcmil	3-5/16 hub cover plate	**UHTRS233CCH**
200	4	UG	Horn	#8–350 kcmil	#8–350 kcmil	Solid top	**UHTRS223ARHCH**
200	4	UG	Horn	#8–350 kcmil	#8–350 kcmil	Solid top	**UFHTRS223ACH**
200	5	UG	Horn	#8–350 kcmil	#8–350 kcmil	Solid top	**UGHTRS223ACH**
200	4	UG	Horn	#8–350 kcmil	#8–350 kcmil	Solid top	**UHTTRS223ACH**
200	4	UG	Horn	#8–350 kcmil	#8–350 kcmil	Solid top	**UHTRS223ACH**
200	4	OH/UG	Horn	#6–350 kcmil	#6–350 kcmil	3-5/16 hub opening	**UHTRS213CE**
200	4	OH/UG	Horn	#6–350 kcmil	#6–350 kcmil	3-5/16 hub opening	**UHTRS213BE**
200	4	OH/UG	Horn	#8–350 kcmil	#8–350 kcmil	Solid top	**UHTRS213AE**
200	4	OH	Horn	#8–350 kcmil	#8–350 kcmil	3-5/16 hub opening	**UHTRS203BCH**
200	4	OH	Horn	#8–250 kcmil	#8–250 kcmil	3-5/16 hub opening	**UHTRS202BCH**
200	4	OH/UG	None	#8–250 kcmil	#8–250 kcmil	2-inch bolt-on hub	**URS202NPECCH** ③

Notes

① Aluminum enclosure.
② Barrel lock.
③ PEC approved.

For dimensions, see **Pages V1-T4-8** and **V1-T4-9**.

Residential Ringless Type Cover, continued

Ampere Rating	Jaws	Service	Bypass	Connections Line	Load	Opening, Hub or Closure Plate	Catalog Number
200	4	OH/UG	Horn	#8–350 kcmil	#8–350 kcmil	Solid top	**UHIRS223ACVCH**
200	4	OH/UG	Horn	#8–350 kcmil	#8–350 kcmil	3-5/16 hub opening	**UHIRS213BCVCH**
200	5	OH/UG	—	#6–350 kcmil	#6–350 kcmil	Closure plate	**UGTRS213CE**
200	5	OH/UG	—	#6–350 kcmil	#6–350 kcmil	Hub opening	**UGTRS213BE**
200	5	OH/UG	Horn	#6–350 kcmil	#6–350 kcmil	Closure plate	**786685217918**
200	5	OH/UG	Horn	#6–350 kcmil	#6–350 kcmil	3-5/16 hub opening	**UGHTRS213BE**
200	5	OH/UG	Horn	#8–250 kcmil	#8–250 kcmil	3-5/16 hub cover plate	**UGHRS212CKCCH**
200	4	OH	—	#8–250 kcmil	#8–250 kcmil	3-5/16 hub opening	**UFTRS202BCH**
200	4	OH	Horn	#8–250 kcmil	#8–250 kcmil	3-5/16 hub opening	**UFHTRS202BCH**
200	4	UG	Horn	#8–350 kcmil	#8–350 kcmil	Solid top	**UBHTRS223ARHCH**
200	4	UG	Horn	#8–350 kcmil	#8–350 kcmil	Solid top	**UBHRS223ACH**
200	4	OH	Horn	#8–250 kcmil	#8–250 kcmil	3-5/16 hub cover plate	**UBHRS202BCH**
200	4	OH/UG	—	#8–350 kcmil	#8–350 kcmil	3-5/16 hub opening	**UATRS213CFLCH**
200	4	OH/UG	Horn	#8–350 kcmil	#8–350 kcmil	3-5/16 hub cover plate	**UAHTRS233CSHCH**
200	4	UG	Horn	#8–350 kcmil	#8–350 kcmil	Solid top	**UAHTRS223AFLCH**
200	4	OH	Horn	#8–250 kcmil	#8–250 kcmil	3-5/16 hub opening	**UAHTRS202BFLCH**
200	4	OH/UG	—	#8–350 kcmil	#8–350 kcmil	3-5/16 hub closure plate	**U92197CCCPLCH**
200	4	OH/UG	—	#8–350 kcmil	#8–350 kcmil	3-5/16 hub closure plate	**1009928CH**
200	4	OH/UG	Horn	#8–250 kcmil	#8–250 kcmil	Solid top	**1009874ACH**
200	4	UG	—	3/8-inch studs	3/8-inch studs	Solid top	**1009046CH**
200	4	UG	Horn	#8–350 kcmil	#8–350 kcmil	Solid top	**1008941CH**
200	4	UG	Horn	#8–350 kcmil	#8–350 kcmil	Solid top	**1008940CH**
200	4	UG	Horn	#8–350 kcmil	#8–350 kcmil	Solid top	**1008827CH**
200	4	UG	Horn	#8–350 kcmil	#8–350 kcmil	Solid top	**1008819CH**
200	4	UG	Horn	#8–350 kcmil	#8–350 kcmil	Solid top	**1008717CH**
200	4	UG	—	#8–350 kcmil	#8–350 kcmil	Solid top	**1008617CH**
200	4	OH/UG	Horn	#8–350 kcmil	#8–350 kcmil	3-5/16 hub opening	**1007817CH**
200	4	OH	Horn	#8–250 kcmil	#8–250 kcmil	3-5/16 hub opening	**1007699CH**
200	4	OH	Horn	#8–250 kcmil	#8–250 kcmil	3-5/16 hub opening	**1007665CH**
200	4	UG	Horn	#8–350 kcmil	#8–350 kcmil	Solid top	**1007588CH**
200	4	OH/UG	—	3/8-inch studs	3/8-inch studs	3-5/16 hub opening	**1007448ACH**
200	4	UG	Horn	#8–350 kcmil	#8–350 kcmil	Solid top	**1004884ARHCH** ①
200	4	UG	Horn	#8–350 kcmil	#8–350 kcmil	Solid top	**1004884ACH**
200	4	OH/UG	—	#8–#250 kcmil	#8–#250 kcmil	3-5/16 hub cover plate	**1004710ECH**
200	4	OH	—	N/A	N/A	N/A	**1004709DCH**
200	4	OH	Horn	#8–#250 kcmil	#8–#250 kcmil	2-inch bolt-on hubs	**1004455BCH**
200	4	OH	Horn	#8–250 kcmil	#8–250 kcmil	3-5/16 hub opening	**1004161ACH**
200	4	OH/UG	Horn	#8–350 kcmil	#8–350 kcmil	3-5/16 hub opening	**1004159ACH**
200	4	OH/UG	—	#8–350 kcmil	#8–350 kcmil	Hub closure plate	**1008826ACH** ②
200	4	OH/UG	Lever	#6–350 kcmil	#6–350 kcmil	Hub closure plate	**1006352CCH** ②
200	5	OH	Horn	#8–250 kcmil	#8–250 kcmil	3-5/16 hub opening	**1003879ACH**
200	5	OH/UG	Horn	#8–350 kcmil	#8–350 kcmil	3-5/16 hub opening	**1003878ACH**

Notes

① Right hand incoming.

② Austin Energy approved.

For dimensions, see **Pages V1-T4-8** and **V1-T4-9**.

URS101BCH

Residential Ringless Type Cover, continued

Ampere Rating	Jaws	Service	Bypass	Connections Line	Load	Opening, Hub or Closure Plate	Catalog Number
150	4	OH/UG	—	#8–2/0 AWG	#8–2/0 AWG	Hub closure plate	**1004326DCH** ①
150	4	OH/UG	—	#8–250 kcmil	#8–250 kcmil	Hub opening	**UTRS502BCH**
150	4	OH	—	#8–250 kcmil	#8–250 kcmil	3-5/16 hub opening	**UTRS502BCH**
150	4	OH	—	#8–250 kcmil	#8–250 kcmil	3-5/16 hub cover plate	**UTRS502CCH**
125	4	UG	—	N/A	N/A	N/A	**1006385BCH**
125	4	OH/UG	—	#8–2/0 cu/al	#8–2/0 cu/al	3-5/16 hub opening	**UTRS111BCH**
125	4	OH	—	#8–2/0 cu/al	#8–2/0 cu/al	3-5/16 hub opening	**UBTRS101BCH**
125	4	OH	—	#8–2/0 cu/al	#8–2/0 cu/al	1-1/4-inch bolt-on hub	**UTRS101LCH**
125	4	OH	—	#8–2/0 cu/al	#8–2/0 cu/al	3-5/16 hub cover plate	**UTRS101CE**
125	4	OH	—	#8–2/0 cu/al	#8–2/0 cu/al	3-5/16 hub opening	**UTRS101BE**
125	4	OH	—	#8–2/0	#8–2/0	3-5/16 hub cover plate	**URS101CCPLCH**
125	4	OH	Horn	cu/al with 1/2-inch hex head wire clamping screw	cu/al with 1/2-inch hex head wire clamping screw	3-5/16 hub cover plate	**URS101BDQCH**
125	4	OH	—	#8–2/0	#8–2/0	3-5/16 hub opening	**URS101BCPLCH**
125	4	OH	—	#8–2/0	#8–2/0	3-5/16 hub opening	**URS101BCH**
125	4	OH	Horn	#8–2/0	#8–2/0	3-5/16 hub opening	**UHTTRS101BCH**
125	4	OH/UG	Horn	#8–250 kcmil	#8–250 kcmil	3-5/16 hub opening	**UHTRS111BCH**
125	4	OH	Horn	#8–2/0	#8–2/0	1.25-inch hub mounted	**UHTRS101LCH**
125	4	OH	Horn	#8–2/0	#8–2/0	Closure plate	**UHTRS101CE**
125	4	OH	Horn	#8–2/0	#8–2/0	3-5/16 hub opening	**UHTRS101BE**
125	5	OH/UG	—	#8–2/0	#8–2/0	3-5/16 hub cover plate	**UGRS10101CKCCH**
125	5	OH/UG	—	#8–2/0	#8–2/0	3-5/16 hub cover plate	**UGHTRS111CCH**
125	5	OH	—	#8–2/0	#8–2/0	3-5/16 hub opening	**UGHTRS101BCH**
125	4	OH	—	#8–2/0	#8–2/0	3-5/16 hub cover plate	**UBHRS101BCH**
125	4	OH/UG	—	#8–2/0	#8–2/0	3-5/16 hub cover plate	**UATZRS101CFLCH**
125	4	OH	—	#8–2/0	#8–2/0	3-5/16 hub cover plate	**UATRS101CCH**
125	4	OH	—	#8–2/0	#8–2/0	3-5/16 hub opening	**1008947CH**
125	4	UG	N/A	N/A	N/A	N/A	**1005826ACH**
125	4	OH	—	#8–2/0	#8–2/0	1-1/4-inch bolt-on hub	**1004931BCH**
125	4	OH	—	#8–2/0	#8–2/0	3-5/16 hub opening	**1004162ACH**
125	5	OH	—	#8–2/0	#8–2/0	3-5/16 hub opening	**1003880ACH**
125	4	OH	—	#8–2/0	#8–2/0	3-5/16 hub opening	**UTZRS101BFLCH**
125	4	OH	—	#8–2/0	#8–2/0	3-5/16 hub closure plate	**UTZRS101CFLCH**
125	5	OH	Horn	#8–2/0	#8–2/0	Hub opening	**UTRS101CEPSEG** ②
100	4	OH	—	#8–2/0	#8–2/0	3-5/16 hub opening	**1009079CH**
200	5	OH/UG	Horn	#8–350 kcmil	#8–350 kcmil	Hub closure plate	**UTRS213CEPSEG** ②

Notes

① Austin Energy approved.

② PSE&G approved.

For dimensions, see **Pages V1-T4-8** and **V1-T4-9**.

Residential Ring Type Cover

Ampere Rating	Jaws	Service	Connections Line	Load	Opening, Hub or Closure Plate	Catalog Number
200	4	UG	#8–350 kcmil	#8–350 kcmil	Solid top	**URTRS223ACH**
200	4	OH/UG	#8–350 kcmil	#8–350 kcmil	3-5/16 hub cover plate	**URRS213CCH**
200	4	OH/UG	#8–350 kcmil	#8–350 kcmil	2 inch hub mounted	**URTRS213NEUSCH**
200	4	OH/UG	#8–350 kcmil	#8–350 kcmil	3-5/16 hub cover plate	**URTRS213CEUSCH**
200	4	OH/UG	#8–350 kcmil	#8–350 kcmil	3-5/16 hub cover plate	**1009424CH**
200	4	OH/UG	#8–350 kcmil	#8–350 kcmil	Knockouts	**1009449CH**
200	4	OH	#8–350 kcmil	#8–350 kcmil	3-5/16 hub opening	**URSTRS203BCH**
200	4	OH	#8–250 kcmil	#8–250 kcmil	3-5/16 hub cover plate	**URS212BCRCH**
200	4	OH/UG	#8–250 kcmil	#8–250 kcmil	3-5/16 hub cover plate	**URTRS202BCH**
200	4	OH	#8–250 kcmil	#8–250 kcmil	3-5/16 hub opening	**URTRS213BE**
200	4	OH/UG	#6–350 kcmil	#6–350 kcmil	Hub opening	**URTRS202BCH**
200	4	OH/UG	#6–350 kcmil	#6–350 kcmil	Closure plate	**URTRS213CE**
200	4	UG	#6–350 kcmil	#6–350 kcmil	3-5/16 hub opening	**URTRS213BEUSCH**
200	4	OH	#8–250 kcmil	#8–250 kcmil	2-inch hub mounted	**URTRS202NEUSCH**
200	4	OH	#8–250 kcmil	#8–250 kcmil	3-5/16 hub opening	**UNRRS202BEUSCH**
200	4	OH/UG	#6–350 kcmil	#6–350 kcmil	Closure plate	**UNRRS213CEUSE**
200	4	OH	#8–250 kcmil	#8–250 kcmil	Hub opening	**UNRRS213BEUSE**
200	4	UG	#6–350 kcmil	#6–350 kcmil	Solid top	**UNRRS213AEUSE**
200	4	OH/UG	#6–250 kcmil	#6–250 kcmil	5x5 hub opening 3-5/16 adapter plate	**1009097CH**
125	4	OH	#8–2/0 cu/al	#8–2/0 cu/al	3-5/16 hub opening	**URS101BCRCH**
125	4	OH	#8–2/0 cu/al	#8–2/0 cu/al	1-1/4-inch bolt-on hub	**URRS101LCH**
125	4	OH	#8–2/0 cu/al	#8–2/0 cu/al	Hub cover plate	**URTRS101BE**
125	4	OH	#8–2/0 cu/al	#8–2/0 cu/al	Hub cover plate	**URTRS101CE**
125	4	OH	#8–2/0 cu/al	#8–2/0 cu/al	3-5/16 hub cover plate	**UNRRS101BEUSE**
125	4	OH	#8–2/0 cu/al	#8–2/0 cu/al	Closure plate	**UNRRS101CEUSE**
125	4	OH/UG	#8–2/0 cu/al	#8–2/0 cu/al	3-5/16 hub cover plate	**UNRRS111BEUSE**
125	4	UG	#8–2/0 cu/al	#8–2/0 cu/al	Solid top	**UNRRS111AEUSE**
125	4	OH	#8–2/0 cu/al	#8–2/0 cu/al	3-5/16 hub opening	**URSTRS101BCH**

Note

For dimensions, see **Pages V1-T4-8** and **V1-T4-9**.

Dimensions

Approximate Dimensions in Inches (mm)

Residential Ringless Type Cover

Catalog Number	Height	Width	Depth
UTRS240ACH	18.63 (473.2)	13.00 (330.2)	4.94 (125.5)
UTRS2303CCH	20.00 (508.0)	13.00 (330.2)	4.94 (125.5)
UTRS223ACH	13.00 (330.2)	13.00 (330.2)	4.94 (125.5)
UTRS220ACH	15.13 (384.3)	13.00 (330.2)	4.94 (125.5)
UTRS213CFLCH	15.00 (381.0)	11.00 (279.4)	4.37 (111.0)
UTRS213CEPCH	15.00 (381.0)	11.00 (279.4)	4.37 (111.0)
UGTRS213CE	15.13 (384.3)	11.25 (285.8)	4.50 (114.3)
UTRS213CE	15.13 (384.3)	11.25 (285.8)	4.50 (114.3)
UATRS213BCH	15.13 (384.3)	11.25 (285.8)	4.50 (114.3)
URS213BCH	15.00 (381.0)	11.00 (279.4)	4.36 (110.7)
UTRS213BE	15.13 (384.3)	11.25 (285.8)	4.50 (114.3)
UTRS213AFLCH	15.00 (381.0)	11.00 (279.4)	4.37 (111.0)
UTRS213ACH	15.00 (381.0)	11.00 (279.4)	4.36 (110.7)
UTRS2138BCH	20.00 (508.0)	13.00 (330.2)	4.94 (125.5)
UTRS212ACH	14.00 (355.6)	11.00 (279.4)	4.37 (111.0)
UTRS212CCH	14.00 (355.6)	11.00 (279.4)	4.36 (110.7)
UTRS212CFLCH	14.00 (355.6)	11.00 (279.4)	4.36 (110.7)
UTRS212BCH	14.00 (355.6)	11.00 (279.4)	4.36 (110.7)
UTRS202NCH	14.00 (355.6)	8.00 (203.2)	4.36 (110.7)
UATRS202BFLCH ①	14.00 (355.6)	8.00 (203.2)	4.36 (110.7)
UTRS232CCH	17.12 (434.8)	13.00 (330.2)	4.93 (125.2)
UTRS202BCH	14.00 (355.6)	8.00 (203.2)	4.36 (110.7)
URS212ACH	14.00 (355.6)	11.00 (279.4)	4.38 (111.3)
URS202NCH	14.00 (355.6)	8.00 (203.2)	4.38 (111.3)
URS202BDQCH	14.00 (355.6)	8.00 (203.2)	4.38 (111.3)
UFHTRS213CCH ②	15.00 (381.0)	11.00 (279.4)	4.38 (111.3)
UHTTRS213BCH	15.00 (381.0)	11.00 (279.4)	4.38 (111.3)
UHTTRS213CCH	15.00 (381.0)	11.00 (279.4)	4.38 (111.3)
UHTTRS202BCH	14.00 (355.6)	8.00 (203.2)	4.38 (111.3)
UHTRS233CCH	17.13 (435.1)	13.00 (330.2)	4.94 (125.5)
UHTRS223ARHCH	13.00 (330.2)	13.00 (330.2)	4.94 (125.5)
UFHTRS223ACH	13.00 (330.2)	13.00 (330.2)	4.94 (125.5)
UGHTRS223ACH	13.00 (330.2)	13.00 (330.2)	4.94 (125.5)
UHTTRS223ACH	13.00 (330.2)	13.00 (330.2)	4.94 (125.5)
UHTRS223ACH	13.00 (330.2)	13.00 (330.2)	4.94 (125.5)
UHTRS213CE	15.00 (381.0)	11.00 (279.4)	4.38 (111.3)
UHTRS213BE	15.00 (381.0)	11.00 (279.4)	4.38 (111.3)
UHTRS213AE	15.00 (381.0)	11.00 (279.4)	4.38 (111.3)
UHTRS203BCH	15.00 (381.0)	8.00 (203.2)	4.38 (111.3)
UHTRS202BCH	14.00 (355.6)	8.00 (203.2)	4.38 (111.3)
UHIRS223ACVCH	13.00 (330.2)	13.00 (330.2)	4.94 (125.5)

Residential Ringless Type Cover, continued

Catalog Number	Height	Width	Depth
UHIRS213BCVCH	15.00 (381.0)	11.00 (279.4)	4.38 (111.3)
UGTRS213CE	15.13 (384.3)	11.25 (285.8)	4.50 (114.3)
UGTRS213BE	15.13 (384.3)	11.25 (285.8)	4.50 (114.3)
786685217918	15.13 (384.3)	11.25 (285.8)	4.50 (114.3)
UGHTRS213BE	15.13 (384.3)	11.25 (285.8)	4.50 (114.3)
UGHRS212CKCCH	14.00 (355.6)	11.00 (279.4)	4.38 (111.3)
UFTRS202BCH	14.00 (355.6)	8.00 (203.2)	4.38 (111.3)
UFHTRS202BCH	14.00 (355.6)	8.00 (203.2)	4.38 (111.3)
UBHTRS223ARHCH	13.00 (330.2)	13.00 (330.2)	4.94 (125.5)
UBHRS223ACH	13.00 (330.2)	13.00 (330.2)	4.94 (125.5)
UBHRS202BCH	14.00 (355.6)	8.00 (203.2)	4.38 (111.3)
UATRS213CFLCH	15.00 (381.0)	11.00 (279.4)	4.38 (111.3)
UAHTRS233CSHCH	17.13 (435.1)	13.00 (330.2)	4.94 (125.5)
UAHTRS223AFLCH	13.00 (330.2)	13.00 (330.2)	4.94 (125.5)
UAHTRS202BFLCH	14.00 (355.6)	8.00 (203.2)	4.38 (111.3)
U92197CCCPLCH	14.13 (358.9)	13.00 (330.2)	4.94 (125.5)
1009928CH	15.00 (381.0)	11.00 (279.4)	4.38 (111.3)
1009874ACH	15.00 (381.0)	13.00 (330.2)	4.94 (125.5)
1009046CH	20.75 (527.1)	9.00 (228.6)	4.94 (125.5)
1008941CH	17.13 (435.1)	13.00 (330.2)	4.94 (125.5)
1008940CH	17.13 (435.1)	13.00 (330.2)	4.94 (125.5)
1008827CH	13.00 (330.2)	13.00 (330.2)	4.94 (125.5)
1008819CH	13.00 (330.2)	13.00 (330.2)	4.94 (125.5)
1008717CH	15.00 (381.0)	13.00 (330.2)	4.94 (125.5)
1008617CH	15.00 (381.0)	13.00 (330.2)	4.94 (125.5)
1007817CH	15.00 (381.0)	11.00 (279.4)	4.38 (111.3)
1007699CH	14.00 (355.6)	8.00 (203.2)	4.38 (111.3)
1007665CH	14.00 (355.6)	8.00 (203.2)	4.38 (111.3)
1007588CH	13.00 (330.2)	13.00 (330.2)	4.94 (125.5)
1007448ACH	19.00 (482.6)	11.00 (279.4)	4.38 (111.3)
1004884ARHCH ③	13.00 (330.2)	13.00 (330.2)	4.93 (125.2)
1004884ACH	13.00 (330.2)	13.00 (330.2)	4.93 (125.2)
1004710ECH	14.00 (355.6)	11.00 (279.4)	4.38 (111.3)
1004709DCH	N/A	N/A	N/A
1004455BCH	15.00 (381.0)	8.00 (203.2)	4.38 (111.3)
1004161ACH	14.00 (355.6)	8.00 (203.2)	4.38 (111.3)
1004159ACH	15.00 (381.0)	11.00 (279.4)	4.38 (111.3)
1003879ACH	15.00 (381.0)	8.00 (203.2)	4.38 (111.3)
1003878ACH	15.00 (381.0)	11.00 (279.4)	4.38 (111.3)
UTRS502BCH	14.00 (355.6)	8.00 (203.2)	4.38 (111.3)

Notes

① Aluminum enclosure.
② Barrel lock.
③ Right hand incoming.

Approximate Dimensions in Inches (mm)

Residential Ringless Type Cover, continued

Catalog Number	Height	Width	Depth
UTRS502BCH	14.00 (355.6)	8.00 (203.2)	4.36 (110.7)
UTRS502CCH	14.00 (355.6)	8.00 (203.2)	4.36 (110.7)
1006385BCH	N/A	N/A	N/A
UTRS111BCH	14.00 (355.6)	11.00 (279.4)	4.36 (110.7)
UBTRS101BCH	10.88 (276.4)	8.00 (203.2)	3.50 (88.9)
UTRS101LCH	10.88 (276.4)	8.00 (203.2)	3.50 (88.9)
UTRS101CE	11.05 (280.7)	8.22 (208.8)	3.61 (91.7)
UTRS101BE	11.05 (280.7)	8.22 (208.8)	3.61 (91.7)
URS101CCPLCH	10.88 (276.4)	8.00 (203.2)	3.50 (88.9)
URS101BDQCH	10.88 (276.4)	8.00 (203.2)	3.50 (88.9)
URS101BCPLCH	10.88 (276.4)	8.00 (203.2)	3.50 (88.9)
URS101BCH	10.88 (276.4)	8.00 (203.2)	3.50 (88.9)
UHTTRS101BCH	10.88 (276.4)	8.00 (203.2)	3.50 (88.9)
UHTRS111BCH	14.00 (355.6)	11.00 (279.4)	4.38 (111.3)
UHTRS101LCH	10.88 (276.4)	8.00 (203.2)	3.50 (88.9)
UHTRS101CE	11.05 (280.7)	8.22 (208.8)	3.61 (91.7)
UHTRS101BE	11.05 (280.7)	8.22 (208.8)	3.61 (91.7)
UGRS10101CKCCH	12.00 (304.8)	8.00 (203.2)	3.50 (88.9)
UGHTRS111CCH	14.00 (355.6)	11.00 (279.4)	4.36 (110.7)
UGHTRS101BCH	10.88 (276.4)	8.00 (203.2)	3.50 (88.9)
UBHRS101BCH	10.88 (276.4)	8.00 (203.2)	3.50 (88.9)
UATZRS101CFLCH	10.88 (276.4)	8.00 (203.2)	3.50 (88.9)
UATRS101CCH	10.87 (276.1)	8.00 (203.2)	3.50 (88.9)
1008947CH	10.89 (276.6)	8.00 (203.2)	3.50 (88.9)
1005826ACH	N/A	N/A	N/A
1004931BCH	10.88 (276.4)	8.00 (203.2)	3.50 (88.9)
1004162ACH	10.89 (276.6)	8.00 (203.2)	3.50 (88.9)
1003880ACH	10.89 (276.6)	8.00 (203.2)	3.50 (88.9)
UTZRS101BFLCH	N/A	N/A	N/A
UTZRS101CFLCH	N/A	N/A	N/A
1009079CH	23.75 (603.3)	8.00 (203.2)	3.48 (88.4)

Residential Ring Type Cover

Catalog Number	Height	Width	Depth
URTRS223ACH	13.00 (330.2)	13.00 (330.2)	4.93 (125.2)
URRS213CCH	15.00 (381.0)	11.00 (279.4)	4.38 (111.3)
URTRS213NEUSCH	15.00 (381.0)	11.00 (279.4)	4.38 (111.3)
URTRS213CEUSCH	15.00 (381.0)	11.00 (279.4)	4.38 (111.3)
1009424CH	15.00 (381.0)	11.00 (279.4)	4.38 (111.3)
1009449CH	18.31 (465.1)	14.19 (360.4)	5.13 (130.3)
URSTRS203BCH	N/A	N/A	N/A
URS212BCRCH	14.00 (355.6)	8.00 (203.2)	4.38 (111.3)
URTRS202BCH	14.00 (355.6)	11.00 (279.4)	4.38 (111.3)
URTRS213BE	14.00 (355.6)	8.00 (203.2)	4.50 (114.3)
URTRS202BCH	15.13 (384.3)	11.25 (285.8)	4.50 (114.3)
URTRS213CE	15.13 (384.3)	11.25 (285.8)	4.50 (114.3)
URTRS213BEUSCH	15.13 (384.3)	11.25 (285.8)	4.50 (114.3)
URTRS202NEUSCH	14.00 (355.6)	8.00 (203.2)	4.38 (111.3)
UNRRS202BEUSCH	14.00 (355.6)	8.00 (203.2)	4.38 (111.3)
UNRRS213CEUSE	15.13 (384.3)	11.25 (285.8)	4.50 (114.3)
UNRRS213BEUSE	15.13 (384.3)	11.25 (285.8)	4.50 (114.3)
UNRRS213AEUSE	15.13 (384.3)	11.25 (285.8)	4.50 (114.3)
1009097CH	19.00 (482.6)	13.00 (330.2)	5.25 (133.4)
URS101BCRCH	10.88 (276.4)	8.00 (203.2)	3.50 (88.9)
URRS101LCH	10.88 (276.4)	8.00 (203.2)	3.50 (88.9)
URTRS101BE	11.00 (279.4)	8.25 (209.6)	3.63 (92.2)
URTRS101CE	11.00 (279.4)	8.25 (209.6)	3.63 (92.2)
UNRRS101BEUSE	10.88 (276.4)	8.00 (203.2)	3.50 (88.9)
UNRRS101CEUSE	10.88 (276.4)	8.00 (203.2)	3.50 (88.9)
UNRRS111BEUSE	14.00 (355.6)	11.00 (279.4)	4.38 (111.3)
URSTRS101BCH	10.88 (276.4)	8.00 (203.2)	3.50 (88.9)

Commercial Lever Bypass Sockets

Contents

Description	*Page*
Catalog Number Selection	**V1-T4-11**
Product Selection	**V1-T4-12**
Dimensions	**V1-T4-16**

Product Description

- Heavy-duty, lever bypass, jaw clamping ringless meter socket design
- 200 A and 320 A styles available
- Single-phase or three-phase
- 4, 5 or 7 terminal available
- 600 Vac maximum rating
- Multiple service design offerings

Standards and Certifications

- UL 414 listed and recognized

Listed

Catalog Number Selection

Single Meter Sockets H Group

UT H 4 2 0 3 B CH

Note: The "U" prefix is always used first followed by other prefixes required in alphabetical order.

Standard Prefixes	
A	= Aluminum enclosure
B	= Barrel lock provision, for an exposed INNER-TITE or Brooks barrel lock; unit includes an internal lock receiver bracket
F	= Barrel Lock with guard provision, for a lock guard INNER-TITE or Brooks barrel lock; unit includes an internal lock receiver bracket
G	= Grounded fifth terminal (9 o'clock position)
H	= Horn bypass
I	= Inhibitor installed in wire connectors
M	= Temporary meter cover (waxed cardboard)
N	= No sealing ring (applies only to ring style sockets)
R	= Ring style socket
S	= Aluminum screw type sealing ring (applies only to ring style sockets)
T	= Grounding connector (#14–#2 Cu) for triplex ground
TT	= Two grounding connectors (#14–#2 Cu) for quadplex ground
U	= UL label
Z	= 5/16-inch hex head connector screw in place of slotted (100 A only)

Product Group	
RS	= Residential service, single position
2R-6R	= Residential service, multiple position
2H-6H	= Commercial or residential service, multiple position
H	= Commercial or residential service, single position

Jaw Quantity
4 = 4 terminals
5 = 5 terminals
7 = 7 terminals

Ampere Rating
2 = 200 A
3 = 320 A

Service Design
0 = Overhead
1 = Combination overhead/underground
2 = Underground, side wired
3 = Combination overhead/underground, side wired

Maximum Conductor (Line & Load)
0 = 0.38-inch stud connectors
3 = #350 kcmil connectors
5 = #500 kcmil connectors
6 = #600 kcmil connectors
7 = #750 kcmil connectors
8 = Dual #250 kcmil connectors
9 = Dual #350 kcmil connectors

Standard Suffixes	
A	= Solid top
B	= Small hub opening
C	= Small hub closing plate mounted
L	= 1.25-inch (31.8 mm) hub mounted
M	= 1.50-inch (38.1 mm) hub mounted
N	= 2.00-inch (50.8 mm) hub mounted
P	= 2.50-inch (63.5 mm) hub mounted
T	= Large hub opening hub
U	= Large hub cover plate hub mounted
V	= 2.50-inch (63.5 mm) large hub mounted
Q	= 3.00-inch (76.2 mm) large hub mounted
R	= 3.50-inch (88.9 mm) large hub mounted
S	= 4.00-inch (101.6 mm) large hub mounted
Z	= Large to small hub adapter mounted

Product Selection

Commercial Lever Bypass

Ampere Rating	Jaws	Service	Bypass	Connections Line	Load	Opening, Hub or Closure Plate	Catalog Number
320	7	OH/UG	Lever	#4-600 kcmil	#4–600 kcmil	5x5 hub opening	**UTTH7336TCH**
320	7	OH	Lever	#600 kcmil	Dual #6–350	5x5 hub opening	**UTH73069THLCH**
320	7	OH/UG	Lever	#14–1/0 cu/al	#6–350 kcmil	5x5 hub cover plate	**UTH73369UHLCH**
320	7	OH/UG	Lever	#14–1/0 cu/al	#6–350 kcmil	5x5 hub opening	**UTH73369THLCH**
320	7	OH/UG	Lever	3/8-inch studs	3/8-inch studs	5x5 hub cover plate	**UFTH7330UCH**
320	7	OH/UG	Lever	#600 kcmil	#600 kcmil	5x5 hub opening	**UTH7336TCH**
320	7	OH/UG	Lever	3/8-inch studs	3/8-inch studs	5x5 hub cover plate	**UTH7330UCH**
320	7	OH/UG	Lever	3/8-inch studs	3/8-inch studs	5x5 hub cover plate	**UTH7330UFLCH**
320	7	OH/UG	Lever	3/8-inch studs	3/8-inch studs	5x5 hub cover plate	**UATH7330UFLCH** ①
320	7	OH/UG	Lever	3/8-inch studs	3/8-inch studs	5x5 hub opening	**UH7330TCPLCH**
320	7	OH/UG	Lever	3/8-inch studs	3/8-inch studs	5x5 hub opening	**UTH7330TCH**
320	7	OH/UG	Lever	3/8-inch studs	3/8-inch studs	5x5 hub-inch opening	**UTTH7330TCH**
320	7	OH/UG	Lever	3/8-inch studs	3/8-inch studs	5x5 hub cover plate	**UH7300UCPLCH**
320	7	OH/UG	Lever	3/8-inch studs	3/8-inch studs	5x5 hub cover plate	**UTH7300UCH**
320	7	OH/UG	Lever	3/8-inch studs	3/8-inch studs	5x5 hub opening	**UTH7300TCH**
320	7	OH/UG	Lever	#6–350 kcmil	#6–350 kcmil	Hub closure plate	**1006353CCH** ②
320	5	OH/UG	Lever	3/8-inch studs	3/8-inch studs	5x5 hub cover plate	**UTH5330UFLCH**
320	5	OH/UG	Lever	3/8-inch studs	3/8-inch studs	5x5 hub cover plate	**UTH5330UCH**
320	5	OH	Lever	3/8-inch studs	3/8-inch studs	5x5 hub opening	**UTH5300TCH**
320	5	OH/UG	Lever	3/8-inch studs	3/8-inch studs	5x5 hub cover plate	**UATH5330UFLCH**
320	4	OH/UG	lever	#4–600 kcmil	#4–600 kcmil	Hub closure plate	**1010468CH** ②
320	4	UG	Lever	3/8-inch studs	3/8-inch studs	Solid top	**UTH4320ACH**
320	4	UG	Lever	3/8-inch studs	Dual #6–350	Solid top	**UTH43209ACH**
320	4	OH/UG	Lever	#6–350 kcmil	#6–350 kcmil	5x5 hub cover plate	**UTH4339UCH**
320	4	OH/UG	Lever	#6–250 kcmil	#6–250 kcmil	5x5 hub cover plate	**UTH4338UCH**
320	4	OH/UG	Lever	#4–600 kcmil	#4–600 kcmil	5x5 hub cover plate	**UTH4336UCH**
320	4	OH/UG	Lever	#4–600 kcmil	#4–600 kcmil	5x5 hub opening	**UTH4336TCH**
320	4	OH/UG	Lever	#4–600 kcmil	#6–350 kcmil	5x5 hub cover plate	**UTH43369UCH**
320	4	OH/UG	Lever	#4–600 kcmil	#6–350 kcmil	5x5 hub opening	**UTH43369TCH**
320	4	OH/UG	Lever	3/8-inch studs	3/8-inch studs	3-5/16 hub cover plate	**UTTH4330UCH**
320	4	OH/UG	Lever	3/8-inch studs	3/8-inch studs	3-5/16 hub cover plate	**UTH4330UCH**
320	4	OH/UG	Lever	3/8-inch studs	3/8-inch studs	5x5 hub opening	**UBTH4330TCH**
320	4	OH/UG	Lever	3/8-inch studs	3/8-inch studs	5x5 hub opening	**UTH4330TCH**
320	4	OH/UG	Lever	3/8-inch studs	3/8-inch studs	5x5 cover plate	**UTH4300UCH**
320	4	OH/UG	Lever	3/8-inch studs	3/8-inch studs	5x5 hub opening	**UTH4300TCH**
320	5	OH/UG	Lever	3/8-inch studs	3/8-inch studs	5x5 hub cover plate	**UH5300UKCCH**
320	4	OH/UG	Lever	#6–250 kcmil	#4–600 kcmil	5x5 hub cover plate	**UH43168UCPLCH**
320	4	OH/UG	Lever	#4–600 kcmil	#6–250 kcmil	5x5 hub cover plate	**UH43068TCPLCH**
320	5	OH/UG	Lever	3/8-inch studs	3/8-inch studs	5x5 hub cover plate	**UGTH4330UCH**
320	5	OH/UG	Lever	3/8-inch studs	3/8-inch studs	5x5 hub opening	**UGTH4330TCH**
320	7	OH/UG	Lever	3/8-inch studs	3/8-inch studs	5x5 hub opening	**UFTH7330TCH**
320	4	OH/UG	Lever	3/8-inch studs	3/8-inch studs	5x5 hub opening	**UFTH4330TCH**

Notes

① Aluminum enclosure.

② Austin Energy approved.

For dimensions, see **Pages V1-T4-16** and **V1-T4-17**.

Commercial Lever Bypass, continued

Ampere Rating	Jaws	Service	Bypass	Connections Line	Load	Opening, Hub or Closure Plate	Catalog Number
320	7	OH/UG	Lever	#4–600 kcmil	#4–600 kcmil	5x5 hub opening	**UATH7336TCH**
320	5	OH/UG	Lever	3/8-inch studs	3/8-inch studs	5x5 hub cover plate	**UATH5330UFLCH**
320	4	OH/UG	Lever	#4–600 kcmil	#4–600 kcmil	5x5 hub opening	**UATH4336TCH**
320	4	OH/UG	Lever	3/8-inch studs	3/8-inch studs	5x5 hub opening	**UATH4330TCH**
320	4	OH/UG	Lever	3/8-inch studs	3/8-inch studs	5x5 hub cover plate	**1009788CH**
320	4	OH/UG	Lever	3/8-inch studs	3/8-inch studs	5x5 hub cover plate	**1009788ACH** ①
320	4	OH/UG	Lever	Dual #6–350	Dual #6–350	(2) 5x5 hub cover plates	**1009760ACH**
320	4	OH/UG	Lever	Dual #6–350	Dual #6–350	5x5 hub cover plate	**1009722CH**
320	4	OH/UG	Lever	3/8-inch studs	3/8-inch studs	5x5 hub cover plate	**782116975945**
320	4	OH/UG	Lever	3/8-inch studs	3/8-inch studs	5x5 hub cover plate	**1009260CH**
320	7	OH/UG	Lever	#4–600 kcmil/Dual 1/0–250 kcmil cu/al	#4–600 kcmil/Dual 1/0–250 kcmil cu/al	5x5 hub opening	**1009181CH**
320	4	UG	Lever	#6–350 kcmil	#6–350 kcmil	Solid top	**1009018CH**
320	4	OH/UG	Lever	3/8-inch studs	3/8-inch studs	5x5 hub opening	**1008950CH**
320	4	OH/UG	Lever	3/8-inch studs	3/8-inch studs	5x5 hub opening	**1008948CH**
320	4	UG	Lever	3/8-inch studs	3/8-inch studs	Solid top	**1008848CH**
320	4	OH/UG	Lever	3/8-inch studs	3/8-inch studs	5x5 hub opening	**1008837CH**
320	4	OH/UG	Lever	3/8-inch studs	3/8-inch studs	5x5 hub opening	**1008836CH**
320	7	OH/UG	Lever	3/8-inch studs	3/8-inch studs	5x5 hub opening	**1008798CH**
320	4	OH/UG	Lever	3/8-inch studs	3/8-inch studs	5x5 hub opening	**1008793CH**
320	5	OH/UG	Lever	3/8-inch studs	3/8-inch studs	5x5 hub opening	**1008792CH**
320	7	OH/UG	Lever	#4–600 kcmil/Dual 1/0–250 kcmil cu/al	#4–600 kcmil/Dual 1/0–250 kcmil cu/al	5x5 hub opening	**1008543CH**
320	4	OH/UG	Lever	#4–600 kcmil cu/al	#4–600 kcmil cu/al	5x5 hub opening	**1008541CH**
320	4	UG	Lever	N/A	N/A	Solid top	**1008540CH**
320	4	OH/UG	Lever	#4–600 kcmil cu/al	#4–600 kcmil cu/al	Solid top	**1008435CH**
320	4	OH/UG	Lever	3/8-inch studs	3/8-inch studs	5x5 hub opening	**1008191CH**
320	4	OH/UG	Lever	#6–350 kcmil	#6–350 kcmil	5x5 hub opening	**1008068CH**
320	4	OH/UG	Lever	N/A	N/A	N/A	**1007818CH**
320	4	OH/UG	Lever	3/8-inch studs	3/8-inch studs	5x5 hub opening	**1007801CH**
320	4	OH/UG	Lever	3/8-inch studs	3/8-inch studs	5x5 hub opening	**1007672CH**
320	4	OH/UG	Lever	#6–350 kcmil	#6–350 kcmil	5x5 hub opening	**1006344ACH**
320	4	OH/UG	Lever	TBD	TBD	5x5 hub opening	**1004984ACH**
320	4	OH/UG	N/A	#4–600 kcmil	#4–600 kcmil	3-inch bolt-on hub	**1004771BCH**
200	7	OH/UG	Lever	3/8-inch studs	3/8-inch studs	N/A	**UBTH7230ACH**
200	7	OH/UG	Lever	#6–350 kcmil	#6–350 kcmil	5x5 hub cover plate	**UTH7233UCH**

Notes

① Bolted in shield.

For dimensions, see **Pages V1-T4-16** and **V1-T4-17**.

Commercial Lever Bypass, continued

Ampere Rating	Jaws	Service	Bypass	Connections Line	Load	Opening, Hub or Closure Plate	Catalog Number
200	7	OH/UG	Lever	#6–350 kcmil	#6–350 kcmil	5x5 hub cover plate	**UTE7213UFLCH**
200	7	OH/UG	Lever	#6–350 kcmil	#6–350 kcmil	3-5/16 hub cover plate	**UETH72137UCH**
200	7	OH/UG	Lever	#6–350 kcmil	#6–350 kcmil	3-5/16 hub cover plate	**UTE7213UCH**
200	7	OH/UG	Lever	#6–350 kcmil	#6–350 kcmil	5x5 hub opening	**UTE7213THLCH**
200	7	OH/UG	Lever	#6–350 kcmil	#6–350 kcmil	5x5 hub opening	**UBHRS212BCH**
200	7	OH/UG	Lever	#6–350 kcmil	#6–350 kcmil	5x5 hub opening	**UBEH7213TCH**
200	7	OH/UG	Lever	#6–350 kcmil	#6–350 kcmil	5x5 hub opening	**UFTE7213TCH** ①
200	7	OH/UG	Lever	#6–350 kcmil	#6–350 kcmil	Large to small hub adapter	**UTE7213ZCH**
200	7	OH/UG	Lever	#6–350 kcmil	#6–350 kcmil	5x5 hub opening	**UTE7213TCH**
200	7	OH/UG	Lever	#6–350 kcmil	#6–350 kcmil	3-5/16 hub cover plate	**UTE7213CFLCH**
200	7	OH/UG	Lever	#6–350 kcmil	#6–350 kcmil	3-5/16 hub cover plate	**UTE7213CCH**
200	7	OH/UG	Lever	#6–350 kcmil	#6–350 kcmil	3-5/16 hub opening	**UBTE7213BCH**
200	7	OH/UG	Lever	#6–350 kcmil	#6–350 kcmil	3-5/16 hub opening	**UTE7213BCH**
200	7	OH/UG	Lever	3/8-inch studs	3/8-inch studs	5x5 hub cover plate	**UTE7210UCH**
200	7	OH	Lever	#6–350 kcmil	#6–350 kcmil	5x5 hub opening	**UTE7203TCH**
200	7	OH	Lever	#6–350 kcmil	#6–350 kcmil	3-5/16 hub opening	**UTE7203BCH**
200	5	OH/UG	Lever	#6–350 kcmil	#6–350 kcmil	5x5 hub cover plate	**UETH5213UCH**
200	5	OH/UG	Lever	#6–350 kcmil	#6–350 kcmil	5x5 hub opening	**UTE5213TCH**
200	5	OH/UG	Lever	#6–350 kcmil	#6–350 kcmil	5x5 hub opening	**UTTE5213TCH**
200	5	OH/UG	Lever	#6–350 kcmil	#6–350 kcmil	3-5/16 hub cover plate	**UTE5213CCH**
200	5	OH/UG	Lever	#6–350 kcmil	#6–350 kcmil	3-5/16 hub opening	**UTE5213BNDCH**
200	5	OH/UG	Lever	#6–350 kcmil	#6–350 kcmil	Large to small hub adapter	**UTE5213ZCH**
200	5	OH/UG	Lever	#6–350 kcmil	#6–350 kcmil	5x5 hub cover plate	**UTE5213UFLCH**
200	5	OH/UG	Lever	#6–350 kcmil	#6–350 kcmil	3-5/16 hub cover plate	**UTE5213CFLCH**
200	5	OH/UG	Lever	#6–350 kcmil	#6–350 kcmil	3-5/16 hub opening	**UTE5213BCH**
200	5	OH/UG	Lever	3/8-inch studs	3/8-inch studs	3-5/16 hub cover plate	**UTE5210CCH**
200	5	OH	Lever	#6–350 kcmil	#6–350 kcmil	3-5/16 hub opening	**UTE5203BCH**
200	4	OH/UG	Lever	#6–350 kcmil	#6–350 kcmil	5x5 hub opening with adapter plate	**UTE4213ZCH**
200	5	OH/UG	Lever	#6–350 kcmil	#6–350 kcmil	5x5 hub cover plate	**UGTE4213CCH**
200	4	OH/UG	Lever	#6–350 kcmil	#6–350 kcmil	5x5 hub opening	**UTE4213TCH**
200	4	OH/UG	Lever	#6–350 kcmil	#6–350 kcmil	5x5 hub cover plate	**UTTE4213UCH** ②
200	4	OH/UG	Lever	#6–350 kcmil	#6–350 kcmil	5x5 hub cover plate	**UTE4213CCH**
200	4	OH/UG	Lever	#6–350 kcmil	#6–350 kcmil	3-5/16 hub opening	**UTE4213BCH**
200	4	OH	Lever	#6–350 kcmil	#6–350 kcmil	3-5/16 hub opening	**UTE4203BCH**
200	7	OH/UG	Lever	#6–350 kcmil	#6–350 kcmil	5x5 hub cover plate	**UIH7213UCVCH**
200	7	OH/UG	Lever	#6–350 kcmil	#6–350 kcmil	3-5/16 hub cover plate	**UE7213CCCCH**
200	7	OH/UG	Lever	#6–350 kcmil	#6–350 kcmil	3-5/16 hub cover plate	**UE7213CCPLCH**
200	7	OH/UG	Lever	#6–350 kcmil	#6–350 kcmil	3-5/16 hub opening	**UE7213BCPLCH**

Notes

① Barrel lock.

② TT = quadplex ground.

For dimensions, see **Pages V1-T4-16** and **V1-T4-17**.

Commercial Lever Bypass, continued

Ampere Rating	Jaws	Service	Bypass	Connections Line	Load	Opening, Hub or Closure Plate	Catalog Number
200	5	OH/UG	Lever	#6–350 kcmil	#6–350 kcmil	3-5/16 hub opening	**UGTE4213BCH**
200	4	OH/UG	Lever	#6–350 kcmil	#6–350 kcmil	3-5/16 hub cover plate	**UGE4213CCCCH**
200	7	OH/UG	Lever	#6–350 kcmil	#6–350 kcmil	3-5/16 hub opening	**UFTE7213BCH**
200	7	OH/UG	Lever	#6–350 kcmil	#6–350 kcmil	5x5 hub opening	**UATE7213TCH**
200	5	OH/UG	Lever	#6–350 kcmil	#6–350 kcmil	3-5/16 hub cover plate	**UATE5213CCH**
200	4	OH/UG	Lever	#6–350 kcmil	#6–350 kcmil	5x5 hub cover plate	**UATE4213UFLCH**
200	5	OH	Lever	#6–350 kcmil	#6–350 kcmil	3-5/16 hub opening	**UBGTE4203BCH**
200	7	UG	Lever	4/0 compression line	#6–350 kcmil cu/al load	Solid top	**1009845ECH**
200	5	OH/UG	Lever	#6–350 kcmil	#6–350 kcmil	3-5/16 hub cover plate	**1008801ECH**
200	5	OH/UG	Lever	3/8-inch studs	3/8-inch studs	3-5/16 hub cover plate	**1008832ECH**
200	4	UG	Lever	#6–350 kcmil	#6–350 kcmil	Solid top	**1007944ECH**
200	7	OH/UG	Lever	#6–350 kcmil cu/al	#6–350 kcmil cu/al	5x5 hub opening	**1007670ECH**
200	7	OH/UG	Lever	#6–350 kcmil	#6–350 kcmil	5x5 hub opening	**UTTE7213TCH**

Note

For dimensions, see **Pages V1-T4-16** and **V1-T4-17**.

Dimensions

Approximate Dimensions in Inches (mm)

Commercial Lever Bypass

Catalog Number	Height	Width	Depth
UTTH7336TCH	39.89 (1013.2)	20.00 (508.0)	6.50 (165.1)
UTH73069THLCH	N/A	N/A	N/A
UTH73369UHLCH	39.89 (1013.2)	20.00 (508.0)	6.50 (165.1)
UTH73369THLCH	39.89 (1013.2)	20.00 (508.0)	6.50 (165.1)
UFTH7330UCH	39.89 (1013.2)	20.00 (508.0)	6.50 (165.1)
UTH7336TCH	39.89 (1013.2)	20.00 (508.0)	6.50 (165.1)
UTH7330UCH	39.89 (1013.2)	20.00 (508.0)	6.50 (165.1)
UTH7330UFLCH	39.89 (1013.2)	20.00 (508.0)	6.50 (165.1)
UATH7330UFLCH ①	39.89 (1013.2)	20.00 (508.0)	6.50 (165.1)
UH7330TCPLCH	39.89 (1013.2)	20.00 (508.0)	6.50 (165.1)
UTH7330TCH	39.89 (1013.2)	20.00 (508.0)	6.50 (165.1)
UTTH7330TCH	39.89 (1013.2)	20.00 (508.0)	6.50 (165.1)
UH7300UCPLCH	39.89 (1013.2)	20.00 (508.0)	6.50 (165.1)
UTH7300UCH	39.89 (1013.2)	20.00 (508.0)	6.50 (165.1)
UTH7300TCH	34.50 (876.3)	15.00 (381.0)	5.63 (143.0)
UTH5330UFLCH	39.88 (1013.0)	20.00 (508.0)	6.50 (165.1)
UTH5330UCH	39.88 (1013.0)	20.00 (508.0)	6.50 (165.1)
UTH5300TCH	39.88 (1013.0)	20.00 (508.0)	6.50 (165.1)
UATH5330UFLCH	39.88 (1013.0)	20.00 (508.0)	6.50 (165.1)
UTH4320ACH	26.00 (660.4)	15.00 (381.0)	5.68 (144.3)
UTH43209ACH	N/A	N/A	N/A
UTH4339UCH	36.63 (930.4)	15.00 (381.0)	5.69 (144.5)
UTH4338UCH	29.00 (736.6)	15.00 (381.0)	5.69 (144.5)
UTH4336UCH	36.63 (930.4)	15.00 (381.0)	5.69 (144.5)
UTH4336TCH	36.63 (930.4)	15.00 (381.0)	5.69 (144.5)
UTH43369UCH	36.63 (930.4)	15.00 (381.0)	5.69 (144.5)
UTH43369TCH	36.63 (930.4)	15.00 (381.0)	5.69 (144.5)
UTTH4330UCH	36.63 (930.4)	15.00 (381.0)	5.69 (144.5)
UTH4330UCH	36.63 (930.4)	15.00 (381.0)	5.69 (144.5)
UBTH4330TCH	36.63 (930.4)	15.00 (381.0)	5.69 (144.5)
UTH4330TCH	36.63 (930.4)	15.00 (381.0)	5.69 (144.5)
UTH4300UCH	34.50 (876.3)	13.00 (330.2)	4.94 (125.5)
UTH4300TCH	34.50 (876.3)	13.00 (330.2)	4.94 (125.5)
UH5300UKCCH	34.50 (876.3)	13.00 (330.2)	4.94 (125.5)
UH43168UCPLCH	34.50 (876.3)	15.00 (381.0)	5.69 (144.5)
UH43068TCPLCH	34.50 (876.3)	13.00 (330.2)	4.94 (125.5)
UGTH4330UCH	36.63 (930.4)	15.00 (381.0)	5.69 (144.5)
UGTH4330TCH	36.63 (930.4)	15.00 (381.0)	5.69 (144.5)
UFTH7330TCH	39.88 (1013.0)	20.00 (508.0)	6.50 (165.1)
UFTH4330TCH	36.63 (930.4)	15.00 (381.0)	5.69 (144.5)

Commercial Lever Bypass, continued

Catalog Number	Height	Width	Depth
UATH7336TCH	39.88 (1013.0)	20.00 (508.0)	6.50 (165.1)
UATH5330UFLCH	39.88 (1013.0)	20.00 (508.0)	6.50 (165.1)
UATH4336TCH	36.63 (930.4)	15.00 (381.0)	5.69 (144.5)
UATH4330TCH	36.63 (930.4)	15.00 (381.0)	5.69 (144.5)
1009788CH	34.50 (876.3)	13.00 (330.2)	4.94 (125.5)
1009788ACH ②	34.50 (876.3)	13.00 (330.2)	4.94 (125.5)
1009760ACH	36.63 (930.4)	15.00 (381.0)	5.68 (144.3)
1009722CH	36.63 (930.4)	15.00 (381.0)	5.68 (144.3)
782116975945	36.63 (930.4)	15.00 (381.0)	5.69 (144.5)
1009260CH	36.63 (930.4)	15.00 (381.0)	5.69 (144.5)
1009181CH	34.50 (876.3)	15.00 (381.0)	5.69 (144.5)
1009018CH	63.00 (1600.2)	12.97 (329.4)	4.94 (125.5)
1008950CH	39.88 (1013.0)	20.00 (508.0)	6.50 (165.1)
1008948CH	36.63 (930.4)	15.00 (381.0)	5.69 (144.5)
1008848CH	58.00 (1473.2)	12.97 (329.4)	4.94 (125.5)
1008837CH	36.63 (930.4)	15.00 (381.0)	6.50 (165.1)
1008836CH	36.63 (930.4)	15.00 (381.0)	6.50 (165.1)
1008798CH	34.50 (876.3)	15.00 (381.0)	5.69 (144.5)
1008793CH	34.50 (876.3)	13.00 (330.2)	4.94 (125.5)
1008792CH	34.50 (876.3)	13.00 (330.2)	4.94 (125.5)
1008543CH	39.89 (1013.2)	20.00 (508.0)	6.60 (167.6)
1008541CH	36.63 (930.4)	15.00 (381.0)	5.69 (144.5)
1008540CH	N/A	N/A	N/A
1008435CH	26.00 (660.4)	15.00 (381.0)	5.69 (144.5)
1008191CH	36.63 (930.4)	15.00 (381.0)	5.69 (144.5)
1008068CH	34.50 (876.3)	16.44 (417.6)	6.50 (165.1)
1007818CH	N/A	N/A	N/A
1007801CH	28.50 (723.9)	18.00 (457.2)	5.69 (144.5)
1007672CH	36.63 (930.4)	15.00 (381.0)	5.69 (144.5)
1006344ACH	28.50 (723.9)	18.00 (457.2)	5.69 (144.5)
1004984ACH	36.63 (930.4)	15.00 (381.0)	5.69 (144.5)
1004771BCH	36.62 (930.1)	15.00 (381.0)	5.68 (144.3)
UBTH7230ACH	N/A	N/A	N/A
UTH7233UCH	27.00 (685.8)	16.00 (406.4)	5.63 (143.0)

Notes

① Aluminum enclosure.
② Bolted in shield.

Approximate Dimensions in Inches (mm)

Commercial Lever Bypass, continued

Catalog Number	Height	Width	Depth
UTE7213UFLCH	19.00 (482.6)	13.00 (330.2)	4.94 (125.5)
UETH72137UCH	19.00 (482.6)	13.00 (330.2)	4.94 (125.5)
UTE7213UCH	19.00 (482.6)	13.00 (330.2)	4.94 (125.5)
UTE7213THLCH	19.00 (482.6)	13.00 (330.2)	4.94 (125.5)
UBHRS212BCH	19.00 (482.6)	13.00 (330.2)	4.94 (125.5)
UBEH7213TCH	19.00 (482.6)	13.00 (330.2)	4.94 (125.5)
UFTE7213TCH ①	19.00 (482.6)	13.00 (330.2)	4.94 (125.5)
UTE7213ZCH	19.00 (482.6)	13.00 (330.2)	4.94 (125.5)
UTE7213TCH	19.00 (482.6)	13.00 (330.2)	4.94 (125.5)
UTE7213CFLCH	19.00 (482.6)	13.00 (330.2)	4.94 (125.5)
UTE7213CCH	19.00 (482.6)	13.00 (330.2)	4.94 (125.5)
UBTE7213BCH	19.00 (482.6)	13.00 (330.2)	4.94 (125.5)
UTE7213BCH	19.00 (482.6)	13.00 (330.2)	4.94 (125.5)
UTE7210UCH	24.69 (627.1)	13.00 (330.2)	4.94 (125.5)
UTE7203TCH	19.00 (482.6)	10.50 (266.7)	4.94 (125.5)
UTE7203BCH	19.00 (482.6)	10.50 (266.7)	4.94 (125.5)
UETH5213UCH	19.00 (482.6)	13.00 (330.2)	4.94 (125.5)
UTE5213TCH	19.00 (482.6)	13.00 (330.2)	4.94 (125.5)
UTTE5213TCH	19.00 (482.6)	13.00 (330.2)	4.94 (125.5)
UTE5213CCH	19.00 (482.6)	13.00 (330.2)	4.94 (125.5)
UTE5213BNDCH	19.00 (482.6)	13.00 (330.2)	4.94 (125.5)
UTE5213ZCH	19.00 (482.6)	13.00 (330.2)	4.94 (125.5)
UTE5213UFLCH	19.00 (482.6)	13.00 (330.2)	4.94 (125.5)
UTE5213CFLCH	19.00 (482.6)	13.00 (330.2)	4.94 (125.5)
UTE5213BCH	19.00 (482.6)	13.00 (330.2)	4.94 (125.5)
UTE5210CCH	20.13 (511.3)	13.00 (330.2)	4.94 (125.5)
UTE5203BCH	19.00 (482.6)	10.50 (266.7)	4.94 (125.5)
UTE4213ZCH	19.00 (482.6)	13.00 (330.2)	4.94 (125.5)
UGTE4213CCH	19.00 (482.6)	13.00 (330.2)	4.94 (125.5)
UTE4213TCH	19.00 (482.6)	13.00 (330.2)	4.94 (125.5)
UTTE4213UCH ②	19.00 (482.6)	13.00 (330.2)	4.94 (125.5)
UTE4213CCH	19.00 (482.6)	13.00 (330.2)	4.94 (125.5)
UTE4213BCH	19.00 (482.6)	13.00 (330.2)	4.94 (125.5)
UTE4203BCH	19.00 (482.6)	10.50 (266.7)	4.94 (125.5)
UIH7213UCVCH	19.00 (482.6)	13.00 (330.2)	4.94 (125.5)
UE7213CCCCH	19.00 (482.6)	13.00 (330.2)	4.94 (125.5)
UE7213CCPLCH	19.00 (482.6)	13.00 (330.2)	4.94 (125.5)
UE7213BCPLCH	19.00 (482.6)	13.00 (330.2)	4.94 (125.5)

Commercial Lever Bypass, continued

Catalog Number	Height	Width	Depth
UGTE4213BCH	19.00 (482.6)	13.00 (330.2)	4.94 (125.5)
UGE4213CCCCH	19.00 (482.6)	13.00 (330.2)	4.94 (125.5)
UFTE7213BCH	19.00 (482.6)	13.00 (330.2)	4.94 (125.5)
UATE7213TCH	19.00 (482.6)	13.00 (330.2)	4.94 (125.5)
UATE5213CCH	19.00 (482.6)	13.00 (330.2)	4.94 (125.5)
UATE4213UFLCH	19.00 (482.6)	13.00 (330.2)	4.94 (125.5)
UBGTE4203BCH	19.00 (482.6)	10.50 (266.7)	4.94 (125.5)
1009845ECH	64.00 (1625.6)	11.00 (279.4)	6.00 (152.4)
1008801ECH	19.00 (482.6)	13.00 (330.2)	4.94 (125.5)
1008832ECH	24.69 (627.1)	13.00 (330.2)	4.94 (125.5)
1007944ECH	22.00 (558.8)	16.00 (406.4)	5.69 (144.5)
1007670ECH	19.00 (482.6)	13.00 (330.2)	4.94 (125.5)
UTTE7213TCH	19.00 (482.6)	13.00 (330.2)	4.94 (125.5)

Notes

① Barrel lock.

② TT = quadplex ground.

Multiple Position Horizontal Ganged Sockets

Contents

Description	*Page*
Catalog Number Selection	**V1-T4-19**
Product Selection	**V1-T4-20**
Dimensions	**V1-T4-23**

Product Description

- Available in 100 A and 200 A designs
- Available in 2-position through 6-position designs
- Multiple service design offerings
- Multiple line/load lug configurations
- Residential or lever bypass socket designs
- Multiple hub opening and closure plate sizes available

Catalog Number Selection

Single Meter Sockets 2R-6R and 2H-6H Group

UT 2R 1 1 2 1 B CH

Note: The "U" prefix is always used first followed by other prefixes required in alphabetical order.

Standard Prefixes

- **A** = Aluminum enclosure
- **B** = Barrel lock provision, for an exposed INNER-TITE or Brooks barrel lock; unit includes an internal lock receiver bracket
- **F** = Barrel lock with guard provision, for a lock guard INNER-TITE or Brooks barrel lock; unit includes an internal lock receiver bracket
- **G** = Grounded fifth terminal (9 o'clock position)
- **H** = Horn bypass
- **I** = Inhibitor installed in wire connectors
- **M** = Temporary meter cover (waxed cardboard)
- **N** = No sealing ring (applies only to ring style sockets)
- **R** = Ring style socket
- **S** = Aluminum screw type sealing ring (applies only to ring style sockets)
- **T** = Grounding connector (#14–#2 Cu) for triplex ground
- **TT** = Two grounding connectors (#14–#2 Cu) for quadplex ground
- **U** = UL label
- **Z** = 5/16-inch hex head connector screw in place of slotted (100 A only)

Product Group

- **RS** = Residential service, single position
- **2R-6R** = Residential service, multiple position
- **2H-6H** = Commercial or residential service, multiple position
- **H** = Commercial or residential service, single position

Ampere Rating

- **1** = 100 A
- **2** = 200 A

Service Design

- **0** = Overhead
- **1** = Combination overhead/underground
- **2** = Underground, side wired
- **3** = Combination overhead/underground, side wired
- **4** = End feed

Maximum Line Conductor

- **0** = 0.38-inch stud connectors
- **1** = #2/0 connectors
- **2** = #250 kcmil connectors
- **3** = #350 kcmil connectors
- **5** = #500 kcmil connectors
- **6** = #600 kcmil connectors
- **7** = #750 kcmil connectors
- **8** = Dual #500 kcmil connectors

Maximum Load Conductor

- **0** = 0.38-inch stud connectors
- **1** = #2/0 connectors
- **2** = #250 kcmil connectors
- **3** = #350 kcmil connectors
- **5** = #500 kcmil connectors
- **6** = #600 kcmil connectors
- **7** = #750 kcmil connectors
- **8** = Dual #500 kcmil connectors

Standard Suffixes

- **A** = Solid top
- **B** = Small hub opening
- **C** = Small hub closing plate mounted
- **L** = 1.25-inch (31.8 mm) hub mounted
- **M** = 1.50-inch (38.1 mm) hub mounted
- **N** = 2.00-inch (50.8 mm) hub mounted
- **P** = 2.50-inch (63.5 mm) hub mounted
- **T** = Large hub opening hub
- **U** = Large hub cover plate hub mounted
- **V** = 2.50-inch (63.5 mm) large hub mounted
- **Q** = 3.00-inch (76.2 mm) large hub mounted
- **R** = 3.50-inch (88.9 mm) large hub mounted
- **S** = 4.00-inch (101.6 mm) large hub mounted
- **Z** = Large to small hub adapter mounted

Product Selection

UT2R2332BCH

Horizontal Design—Multi Position Ringless

Ampere Rating	Jaws	Position	Service	Bypass	Connections Line	Load	Opening, Hub or Closure Plate	Catalog Number
200	4	2	OH/UG	Horn	#6–350 kcmil	#8–250 kcmil	5x5 hub opening	**1004401BCH**
200	4	3	OH/UG	Horn	#6–350 kcmil	#8–250 kcmil	5x5 hub opening	**1004404BCH**
200	5	2	OH/UG	Horn	#6–350 kcmil	#8–250 kcmil	5x5 hub opening	**1004418ACH**
200	4	2	OH/UG	—	3/8-inch stud	#8–250 kcmil	5x5 hub cover plate	**1006737BCH**
200	4	2	OH/UG	Horn	3/8-inch stud	#8–250 kcmil	5x5 hub opening	**1007700CH**
200	4	3	OH/UG	Horn	3/8-inch stud	#8–250 kcmil	Hub opening	**1007701CH**
200	4	2	OH/UG	Horn	#6–350 kcmil	#8–250 kcmil	5x5 hub cover plate	**1008842CH**
200	4	3	OH/UG	Horn	1/0–500 kcmil cu/al	#8–250 kcmil	5x5 hub cover plate	**1008843CH**
200	4	4	OH/UG	Horn	1/0–500 kcmil cu/al	#8–250 kcmil	5x5 hub cover plate	**1008844CH**
200	4	2	OH/UG	Horn	#6–350 kcmil	#8–250 kcmil	5x5 hub cover plate	**1008958CH**
200	4	3	OH/UG	Horn	1/0–500 kcmil cu/al	#8–250 kcmil	5x5 hub cover plate	**1008959CH**
200	4	4	OH/UG	Horn	1/0–500 kcmil cu/al	#8–250 kcmil	5x5 hub cover plate	**1008960CH**
200	4	5	OH/UG	Horn	(2) 1/0–500 kcmil cu/al	#8–250 kcmil	(2) 5x5 hub cover plate	**1009579ACH**
200	4	4	OH/UG	Horn	1/0–500 kcmil cu/al	#8–250 kcmil	5x5 hub opening	**U4R2352TDQCH**
200	4	5	OH/UG	Horn	(2) 1/0–500 kcmil cu/al	#8–250 kcmil	(2) 5x5 hub opening	**U5R2392TTDQCH**
200	4	6	OH/UG	Horn	(2) 1/0–500 kcmil cu/al	#8–250 kcmil	5x5 hub opening (2) places	**U6R2392TTDQCH**
200	4	4	OH/UG	Horn	1/0–500 kcmil cu/al	#8–250 kcmil	5x5 hub opening	**UBH4R2352TCH**
200	4	2	OH/UG	Horn	#6–350 kcmil	#8–250 kcmil	5x5 hub opening	**UBH2R2332TCH**
200	4	3	OH/UG	Horn	#6–350 kcmil	#8–250 kcmil	5x5 hub opening	**UBH3R2332TCH**
200	4	4	OH/UG	Horn	3/8-inch stud	#8–250 kcmil	5x5 hub cover plate	**UEHT4R2302UCH**
200	4	3	OH/UG	Horn	3/8-inch stud	#8–250 kcmil	5x5 hub cover plate	**UEHT3R2302UCH**
200	4	2	OH/UG	Horn	3/8-inch stud	#8–250 kcmil	5x5 hub cover plate	**UEHT2R2302UCH**
200	4	2	UG	Horn	#6–350 kcmil	#8–250 kcmil	Solid top	**UHI2R2332ACVCH**
200	4	2	OH/UG	Horn	#6–350 kcmil	#8–250 kcmil	Hub opening	**UHI2R2332TCVCH**
200	4	4	UG	Horn	1/0–500 kcmil cu/al	#8–250 kcmil	Solid top	**UHI4R2352ACVCH**
200	4	2	OH/UG	Horn	#6–350 kcmil	#8–250 kcmil	5x5 hub cover plate	**UHTT2R2332UCH**
200	4	2	OH/UG	Horn	#6–350 kcmil	#8–250 kcmil	5x5 hub opening	**UHT2R2332TCH**
200	4	3	OH/UG	Horn	#6–350 kcmil	#8–250 kcmil	5x5 hub opening	**UHT3R2332TCH**
200	4	3	OH/UG	Horn	1/0–500 kcmil cu/al	#8–250 kcmil	5x5 hub cover plate	**UHT3R2352UCH**
200	4	4	OH/UG	Horn	1/0–500 kcmil cu/al	#8–250 kcmil	5x5 hub opening	**UHT4R2352TCH**
200	4	4	OH/UG	—	1/0–500 kcmil cu/al	#8–250 kcmil	5x5 hub cover plate	**UT4R2352UFLCH**
200	4	4	OH/UG	Horn	1/0–500 kcmil cu/al	#8–250 kcmil	5x5 hub cover plate	**UHT4R2352UCH**
200	5	2	OH/UG	Lever	1/0–500 kcmil cu/al	#6–350 kcmil	5x5 hub opening	**UT2H52353TCH**
200	4	2	OH/UG	Horn	#6–350 kcmil	#8–250 kcmil	5x5 hub cover plate	**UHT2R2332UCH**
200	4	2	OH/UG	—	#6–350 kcmil	#8–250 kcmil	3-5/16 hub opening	**UT2R2332BCH**
200	4	2	OH/UG	—	#6–350 kcmil	#8–250 kcmil	5x5 hub opening	**UAT2R2332TCH** ①
200	4	2	OH/UG	—	#6–350 kcmil	#8–250 kcmil	5x5 hub opening	**UT2R2332TCH**
200	4	2	OH/UG	—	#6–350 kcmil	#8–250 kcmil	5x5 hub opening	**U2R2332TCPLCH**
200	4	2	OH/UG	—	#6–350 kcmil	#8–250 kcmil	5x5 hub cover plate	**U2R2332UCPLCH**
200	4	2	OH/UG	Horn	#6–350 kcmil	#8–250 kcmil	5x5 hub opening	**U2R2332TDQCH**
200	4	2	OH/UG	—	#6–350 kcmil	#8–250 kcmil	5x5 hub cover plate	**UT2R2332UCH**
200	4	3	OH/UG	Horn	#6–350 kcmil	#8–250 kcmil	Large 5X5 hub opening	**U3R2332TDQCH**

Notes

① Aluminum enclosure.

For dimensions, see **Pages V1-T4-23** and **V1-T4-24**.

UT2R1121BCH

Horizontal Design—Multi Position Ringless, continued

Ampere Rating	Jaws	Position	Service	Bypass	Connections Line	Load	Opening, Hub or Closure Plate	Catalog Number
200	4	3	OH/UG	Lever	1/0–500 kcmil cu/al	#6–350 kcmil	5x5 hub opening	**UT3H42353TCH**
200	5	3	OH/UG	Lever	1/0–500 kcmil cu/al	#6–350 kcmil	5x5 hub opening	**UT3H52353TCH**
200	7	3	OH/UG	Lever	1/0–500 kcmil cu/al	#6–350 kcmil	5x5 hub cover plate	**UT3H72353UHLCH**
200	4	3	OH/UG	—	#6–350 kcmil	#8–250 kcmil	5x5 hub opening	**UT3R2332TCH**
200	4	3	OH/UG	—	#6–350 kcmil	#8–250 kcmil	5x5 hub cover plate	**UT3R2332UCH**
200	4	3	OH/UG	—	1/0–500 kcmil cu/al	#8–250 kcmil	5x5 hub opening	**UT3R2352TCH**
200	4	4	OH/UG	—	1/0–500 kcmil cu/al	#8–250 kcmil	5x5 hub opening	**UT4R2352TCH**
200	4	5	OH/UG	Horn	(2) 1/0–500 kcmil cu/al	#8–250 kcmil	5x5 hub opening (in two places)	**UHT5R2392TTCH**
200	4	5	OH/UG	—	(2) 1/0–500 kcmil cu/al	#8–250 kcmil	5x5 hub opening (in two places)	**UT5R2392TTCH**
200	7	5	OH/UG	Lever	Dual 1/0–500 kcmil	#6–350 kcmil	(2) 5X5 hub closure plates	**UT5H72393UUHLCH**
200	4	6	OH/UG	Horn	(2) 1/0–500 kcmil cu/al	#8–250 kcmil	5x5 hub opening (in two places)	**UHT6R2392TTCH**
200	4	6	OH/UG	—	(2) 1/0–500 kcmil cu/al	#8–250 kcmil	5x5 hub opening (in two places)	**UT6R2392TTCH**
200	4	6	OH/UG	—	(2) 1/0–500 kcmil cu/al	#8–250 kcmil	5x5 closure plate (in two places)	**UT6R2392UUFLCH**
200	7	6	OH/UG	Lever	Dual 1/0–500 kcmil	#6–350 kcmil	5x5 closure plate (in two places)	**UT6H72393UUHLCH**
200	4	6	OH/UG	Horn	(2) 1/0–500 kcmil cu/al	#8–250 kcmil	5x5 hub opening (in two places)	**UHT6R2392TTCH**
150	4	2	OH/UG	Horn	#6–350 kcmil	#8–250 kcmil	3-5/16 hub opening	**U2R5432BDQCH**
150	4	5	OH/UG	—	#6–350 kcmil	#8–250 kcmil	3-5/16 hub opening (in two places)	**UT5R5632BCH**
100	4	6	OH/UG	—	#6–350 kcmil	#8–2/0 cu/al	3-5/16 hub opening	**UT6R1131BCH**
100	4	2	OH/UG	Horn	#6–250 kcmil	#8–2/0 cu/al	5x5 hub opening	**1004426ACH**
100	4	2	OH/UG	Horn	#6–250 kcmil	#8–2/0 cu/al	3-5/16 hub opening	**1008951CH**
100	4	3	OH/UG	Horn	#6–250 kcmil	#8–2/0 cu/al	3-5/16 hub opening	**1008952CH**
100	4	2	OH/UG	Horn	#6–250 kcmil	#8–2/0 cu/al	3-5/16 hub cover plate	**1009693CH**
100	4	3	OH/UG	Horn	#6–250 kcmil	#8–2/0 cu/al	3-5/16 hub cover plate	**1009694CH**
100	4	4	OH/UG	Horn	#6–250 kcmil	#8–2/0 cu/al	3-5/16 hub cover plate	**1009695CH**
100	4	5	OH/UG	Horn	#6–250 kcmil	#8–2/0 cu/al	3-5/16 hub cover plate	**1009696CH**
100	4	6	OH/UG	—	#6–350 kcmil	#8–2/0 cu/al	3-5/16 hub cover plate	**UATZ6R1131CFLCH** ①
100	4	2	OH/UG	Horn	#6–250 kcmil	#8–2/0 cu/al	3-5/16 hub opening	**UBH2R1121BCH**
100	4	3	OH/UG	Horn	#6–250 kcmil	#8–2/0 cu/al	3-5/16 hub opening	**UBH3R1121BCH**
100	4	4	OH/UG	Horn	#6–250 kcmil	#8–2/0 cu/al	3-5/16 hub opening	**UBH4R1121BCH**
100	4	2	OH/UG	Horn	#6–250 kcmil	#8–2/0 cu/al	3-5/16 hub opening	**UHT2R1121BCH**
100	4	4	OH/UG	—	#6–250 kcmil	#8–2/0 cu/al	3-5/16 hub opening	**UT4R1121BCH**
100	4	4	OH/UG	—	#6–250 kcmil	#8–2/0 cu/al	3-5/16 closure plate	**UT4R1121CCH**
100	4	4	OH/UG	Horn	#6–250 kcmil	#8–2/0 cu/al	3-5/16 hub opening	**UHT4R1121BCH**
100	4	5	OH/UG	Horn	#6–250 kcmil	#8–2/0 cu/al	3-5/16 hub opening	**UHT5R1121BCH**
100	4	5	OH/UG	—	#6–250 kcmil	#8–2/0 cu/al	3-5/16 hub opening	**UT5R1121BCH**
100	4	5	OH/UG	—	#6–250 kcmil	#8–2/0 cu/al	3-5/16 closure plate	**UT5R1121CCH**
100	4	2	OH/UG	—	#6–250 kcmil	#8–2/0 cu/al	3-5/16 hub opening	**UT2R1121BCH**
100	4	2	OH/UG	—	#6–250 kcmil	#8–2/0 cu/al	3-5/16 closure plate	**UT2R1121CCH**
100	4	2	OH/UG	Horn	#6–250 kcmil	#8–2/0 cu/al	3-5/16 closure plate	**UHT2R1421CCH**
100	4	2	OH/UG	—	#6–250 kcmil	#8–2/0 cu/al	3-5/16 hub opening 3-5/16 hub cover plate	**UT2R1421BCH**
100	4	3	OH/UG	Horn	#6–250 kcmil	#8–2/0 cu/al	3-5/16 hub opening	**UHT3R1121BCH**
100	4	3	OH/UG	—	#6–250 kcmil	#8–2/0 cu/al	3-5/16 hub opening	**UT3R1121BCH**

Notes

① Aluminum enclosure.

For dimensions, see **Pages V1-T4-23** and **V1-T4-24**.

Horizontal Design—Multi Position Ring Type

Ampere Rating	Jaws	Position	Service	Bypass	Connections Line	Load	Opening, Hub or Closure Plate	Catalog Number
200	4	2	OH/UG	—	1/0–500 kcmil cu/al	#8–250 kcmil	5x5 hub opening	**U2R2352TCRCH**
200	4	2	OH/UG	—	#6–350 kcmil	#8–250 kcmil	5x5 hub cover plate	**URT2R2332UCH**
200	5	4	OH/UG	—	1/0–500 kcmil cu/al	#8–250 kcmil	Large 5x5 hub opening	**U4R2352TCRCH**
125	5	2	OH	—	#8–350 kcmil	#8–2/0 cu/al	Hub opening	**U2V1031BCRCH** ①
125	5	3	OH	—	#8–350 kcmil	#8–2/0 cu/al	Hub opening	**U3V1031BCRCH** ①
100	5	2	OH/UG	—	#6–250 kcmil	#8–2/0 cu/al	3-5/16 opening	**U2R1121BCRCH**
100	5	3	OH/UG	—	#6–250 kcmil	#8–2/0 cu/al	3-5/16 opening	**U3R1121BCRCH**
100	5	4	OH/UG	—	#6–250 kcmil	#8–2/0 cu/al	3-5/16 opening	**U4R1121BCRCH**
100	5	5	OH/UG	—	#6–250 kcmil	#8–2/0 cu/al	3-5/16 opening	**U5R1121BCRCH**

Notes

① Vertical gang.

For dimensions, see **Pages V1-T4-23** and **V1-T4-24**.

Dimensions

Approximate Dimensions in Inches (mm)

Horizontal Design—Multi Position Ringless

Catalog Number	Height	Width	Depth
1004401BCH	14.13 (358.9)	24.31 (617.5)	5.38 (136.7)
1004404BCH	14.13 (358.9)	32.47 (824.7)	5.38 (136.7)
1004418ACH	14.13 (358.9)	24.31 (617.5)	5.38 (136.7)
1006737BCH	14.13 (358.9)	24.31 (617.5)	5.38 (136.7)
1007700CH	14.13 (358.9)	24.31 (617.5)	5.38 (136.7)
1007701CH	14.13 (358.9)	32.47 (824.7)	5.38 (136.7)
1008842CH	14.13 (358.9)	24.31 (617.5)	5.38 (136.7)
1008843CH	14.13 (358.9)	32.47 (824.7)	5.38 (136.7)
1008844CH	14.13 (358.9)	40.63 (1032.0)	5.38 (136.7)
1008958CH	14.13 (358.9)	24.31 (617.5)	5.38 (136.7)
1008959CH	14.13 (358.9)	32.47 (824.7)	5.38 (136.7)
1008960CH	14.13 (358.9)	40.63 (1032.0)	5.38 (136.7)
1009579ACH	14.13 (358.9)	54.78 (1391.4)	5.38 (136.7)
U4R2352TDQCH	14.13 (358.9)	40.63 (1032.0)	5.38 (136.7)
U5R2392TTDQCH	14.13 (358.9)	62.94 (1598.7)	5.38 (136.7)
U6R2392TTDQCH	14.13 (358.9)	62.94 (1598.7)	5.38 (136.7)
UBH4R2352TCH	14.13 (358.9)	40.63 (1032.0)	5.38 (136.7)
UBH2R2332TCH	14.13 (358.9)	24.31 (617.5)	5.38 (136.7)
UBH3R2332TCH	14.13 (358.9)	32.47 (824.7)	5.38 (136.7)
UEHT4R2302UCH	14.13 (358.9)	40.63 (1032.0)	5.38 (136.7)
UEHT3R2302UCH	14.13 (358.9)	32.47 (824.7)	5.38 (136.7)
UEHT2R2302UCH	14.13 (358.9)	24.31 (617.5)	5.38 (136.7)
UHI2R2332ACVCH	14.13 (358.9)	24.31 (617.5)	5.38 (136.7)
UHI2R2332TCVCH	14.13 (358.9)	24.31 (617.5)	5.38 (136.7)
UHI4R2352ACVCH	14.13 (358.9)	40.63 (1032.0)	5.38 (136.7)
UHTT2R2332UCH	14.13 (358.9)	24.31 (617.5)	5.38 (136.7)
UHT2R2332TCH	14.13 (358.9)	24.31 (617.5)	5.38 (136.7)
UHT3R2332TCH	14.13 (358.9)	32.94 (836.7)	5.38 (136.7)
UHT3R2352UCH	14.13 (358.9)	32.47 (824.7)	5.38 (136.7)
UHT4R2352TCH	14.13 (358.9)	40.63 (1032.0)	5.38 (136.7)
UT4R2352UFLCH	14.13 (358.9)	40.63 (1032.0)	5.38 (136.7)
UHT4R2352UCH	14.13 (358.9)	40.63 (1032.0)	5.38 (136.7)
UT2H52353TCH	23.56 (598.4)	32.78 (832.6)	6.00 (152.4)
UHT2R2332UCH	14.13 (358.9)	24.31 (617.5)	5.38 (136.7)
UT2R2332BCH	14.13 (358.9)	24.31 (617.5)	5.38 (136.7)
UAT2R2332TCH ①	14.13 (358.9)	24.31 (617.5)	5.38 (136.7)
UT2R2332TCH	14.13 (358.9)	24.31 (617.5)	5.38 (136.7)
U2R2332TCPLCH	14.13 (358.9)	24.31 (617.5)	5.38 (136.7)
U2R2332UCPLCH	14.13 (358.9)	24.31 (617.5)	5.38 (136.7)
U2R2332TDQCH	14.13 (358.9)	24.31 (617.5)	5.38 (136.7)
UT2R2332UCH	14.13 (358.9)	24.31 (617.5)	5.38 (136.7)
U3R2332TDQCH	14.13 (358.9)	32.47 (824.7)	5.38 (136.7)
UT3H42353TCH	23.56 (598.4)	43.91 (1115.3)	6.00 (152.4)
UT3H52353TCH	23.56 (598.4)	43.91 (1115.3)	6.00 (152.4)
UT3H72353UHLCH	23.56 (598.4)	43.91 (1115.3)	5.38 (136.7)

Horizontal Design—Multi Position Ringless, continued

Catalog Number	Height	Width	Depth
UT3R2332TCH	14.13 (358.9)	32.47 (824.7)	5.38 (136.7)
UT3R2332UCH	14.13 (358.9)	32.47 (824.7)	5.38 (136.7)
UT3R2352TCH	14.13 (358.9)	40.63 (1032.0)	5.38 (136.7)
UT4R2352TCH	14.13 (358.9)	40.63 (1032.0)	5.38 (136.7)
UHT5R2392TTCH	14.13 (358.9)	54.78 (1391.4)	5.38 (136.7)
UT5R2392TTCH	14.13 (358.9)	54.78 (1391.4)	5.38 (136.7)
UT5H72393UUHLCH	29.56 (750.8)	72.15 (1832.6)	6.00 (152.4)
UHT6R2392TTCH	14.13 (358.9)	62.94 (1598.7)	5.38 (136.7)
UT6R2392TTCH	14.13 (358.9)	62.94 (1598.7)	5.38 (136.7)
UT6R2392UUFLCH	14.13 (358.9)	62.94 (1598.7)	5.38 (136.7)
UT6H72393UUHLCH	23.56 (598.4)	83.28 (2115.3)	6.00 (152.4)
UHT6R2392TTCH	14.13 (358.9)	62.94 (1598.7)	5.38 (136.7)
U2R5432BDQCH	14.13 (358.9)	20.16 (512.1)	5.38 (136.7)
UT5R5632BCH	14.13 (358.9)	48.63 (1235.2)	5.38 (136.7)
UT6R1131BCH	14.13 (358.9)	56.93 (1446.0)	4.50 (114.3)
1004426ACH	14.13 (358.9)	24.31 (617.5)	4.50 (114.3)
1008951CH	14.13 (358.9)	24.31 (617.5)	4.50 (114.3)
1008952CH	14.13 (358.9)	32.47 (824.7)	4.50 (114.3)
1009693CH	14.13 (358.9)	24.16 (613.7)	5.38 (136.7)
1009694CH	14.13 (358.9)	32.31 (820.7)	5.38 (136.7)
1009695CH	14.13 (358.9)	49.94 (1268.5)	5.38 (136.7)
1009696CH	14.13 (358.9)	48.63 (1235.2)	5.38 (136.7)
UATZ6R1131CFLCH	14.13 (358.9)	56.94 (1446.3)	4.50 (114.3)
UBH2R1121BCH	14.13 (358.9)	24.94 (633.5)	4.50 (114.3)
UBH3R1121BCH	14.13 (358.9)	32.47 (824.7)	4.50 (114.3)
UBH4R1121BCH	14.13 (358.9)	40.63 (1032.0)	4.50 (114.3)
UHT2R1121BCH	14.13 (358.9)	24.31 (617.5)	4.50 (114.3)
UT4R1121BCH	14.13 (358.9)	40.63 (1032.0)	4.50 (114.3)
UT4R1121CCH	14.13 (358.9)	40.63 (1032.0)	4.50 (114.3)
UHT4R1121BCH	14.13 (358.9)	40.63 (1032.0)	4.50 (114.3)
UHT5R1121BCH	14.13 (358.9)	48.78 (1239.0)	4.50 (114.3)
UT5R1121BCH	14.13 (358.9)	48.78 (1239.0)	4.50 (114.3)
UT5R1121CCH	14.13 (358.9)	48.78 (1239.0)	4.50 (114.3)
UT2R1121BCH	14.13 (358.9)	24.31 (617.5)	4.50 (114.3)
UT2R1121CCH	14.13 (358.9)	24.31 (617.5)	4.50 (114.3)
UHT2R1421CCH	14.13 (358.9)	20.16 (512.1)	5.38 (136.7)
UT2R1421BCH	14.13 (358.9)	20.16 (512.1)	5.38 (136.7)
UHT3R1121BCH	14.13 (358.9)	32.47 (824.7)	4.50 (114.3)
UT3R1121BCH	14.13 (358.9)	32.47 (824.7)	4.50 (114.3)

Note

① Aluminum enclosure.

Approximate Dimensions in Inches (mm)

Horizontal Design—Multi Position Ring Type

Catalog Number	Height	Width	Depth
U2R2352TCRCH	14.13 (358.9)	24.31 (617.5)	5.38 (136.7)
URT2R2332UCH	14.13 (358.9)	24.31 (617.5)	5.38 (136.7)
U4R2352TCRCH	14.13 (358.9)	48.00 (1219.2)	5.38 (136.7)
U2V1031BCRCH ①	8.00 (203.2)	25.63 (650.9)	4.38 (111.1)
U3V1031BCRCH ①	8.00 (203.2)	35.88 (911.2)	4.38 (111.1)
U2R1121BCRCH	14.13 (358.9)	28.00 (711.2)	4.50 (114.3)
U3R1121BCRCH	14.13 (358.9)	38.00 (965.2)	4.50 (114.3)
U4R1121BCRCH	14.13 (358.9)	48.00 (1219.2)	4.50 (114.3)
U5R1121BCRCH	14.13 (358.9)	58.00 (1473.2)	4.50 (114.3)

Note

① Vertical gang.

Instrument Rated Sockets

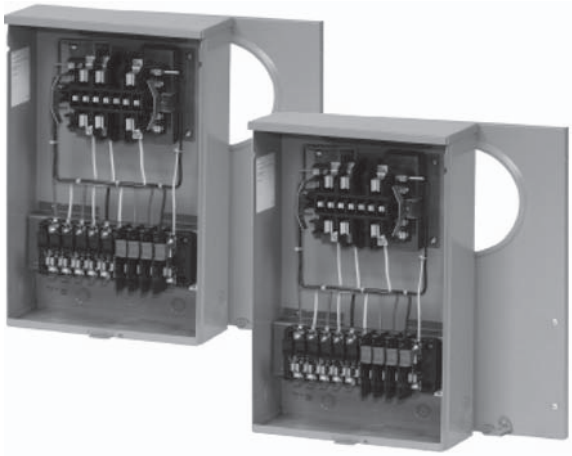

Contents

Description	*Page*
Product Selection	**V1-T4-26**
Dimensions	**V1-T4-26**

Product Description

- Available in 6, 7, 8 and 13 terminal designs
- 20 A ratings standard
- Multiple service designs available (overhead, underground, overhead/ underground)
- Multiple hub opening and closure plate sizes available
- 600 Vac rated
- Single cover/dual cover availability
- Provisional test switches and factory-installed test switch designs available

Product Selection

USTS132CCH

Instrument Rated Sockets

Ampere Rating	Jaws	Service	Opening, Hub or Closure Plate	Catalog Number
20	13 terminal	UG	Solid top	**USTH131A123CH**
20	13 terminal	OH/UG	3-5/16 hub cover plate	**USTS131B102CH**
20	13 terminal	OH/UG	3-5/16 hub cover plate	**USTS132B101CH**
20	13 terminal	OH/UG	3-5/16 hub cover plate	**USTS132CCH**
20	13 terminal	OH/UG	1-inch bolt-on hub	**1008694ACH**
20	8 terminal	OH/UG	1-inch bolt-on hub	**1008695ACH**
20	13 terminal	N/A	N/A	**1007003BCH**
20	13 terminal	Solid top and bottom	Solid top	**1007003CCH**
20	13 terminal	OH/UG	3-5/16 hub cover plate	**USTL131C207CH**
20	13 terminal	OH/UG	Hub opening	**USTS131BCH**
20	13 terminal	OH/UG	1-1/4-inch bolt-on hub	**USTS131L143CH**
20	13 terminal	N/A	N/A	**USTS132BCH**
20	6 terminal	OH/UG	Hub opening	**USTS61B138CH**
20	6 terminal	OH/UG	Hub opening	**UST61BCH**
20	8 terminal	OH/UG	Hub opening	**USTS82B166CH**
20	8 terminal	N/A	Solid top and bottom	**1007361BCH**
N/A	N/A	N/A	N/A	**1008539CH**
20	13 terminal	OH/UG	3-5/16 hub cover plate	**UASTS131C226CH**
20	13 terminal	OH	3-5/16 hub cover plate	**1004671CH**
20	7 terminal	OH	3-5/16 hub cover plate	**ULTS131CCH**
20	6 terminal	UG	Solid top	**STL61A433CH**
20	13 terminal	UG	Solid top	**STL131A120CH**

Dimensions

Approximate Dimensions in Inches (mm)

Instrument Rated Sockets

Catalog Number	Height	Width	Depth
USTH131A123CH	20.00 (304.8)	12.00 (304.8)	4.36 (110.7)
USTS131B102CH	20.00 (304.8)	12.00 (304.8)	4.36 (110.7)
USTS132B101CH	20.00 (304.8)	12.00 (304.8)	4.36 (110.7)
USTS132CCH	20.00 (304.8)	12.00 (304.8)	4.36 (110.7)
1008694ACH	20.00 (304.8)	12.00 (304.8)	4.36 (110.7)
1008695ACH	20.00 (304.8)	12.00 (304.8)	4.36 (110.7)
1007003BCH	N/A	N/A	N/A
1007003CCH	16.50 (419.1)	14.00 (355.6)	3.50 (88.9)
USTL131207CH	20.00 (304.8)	12.00 (304.8)	4.35 (110.5)
USTS131BCH	20.00 (304.8)	12.00 (304.8)	4.35 (110.5)
USTS131L143CH	20.00 (304.8)	12.00 (304.8)	4.35 (110.5)
USTS132BCH	N/A	N/A	N/A
USTS61B138CH	20.00 (304.8)	12.00 (304.8)	4.35 (110.5)
UST61BCH	20.00 (304.8)	12.00 (304.8)	4.35 (110.5)
USTS82B166CH	20.00 (304.8)	12.00 (304.8)	4.35 (110.5)
1007361BCH	16.50 (419.1)	14.00 (355.6)	3.50 (88.9)
1008539CH	N/A	N/A	N/A
UASTS131C226CH	20.00 (304.8)	12.00 (304.8)	4.35 (110.5)
1004671CH	17.00 (431.8)	10.00 (254.0)	5.00 (127.0)
ULTS131CCH	22.00 (558.8)	12.00 (304.8)	4.94 (125.5)

Residential Pedestals

Contents

Description	*Page*
Product Selection	**V1-T4-28**
Dimensions	**V1-T4-28**

Product Description

- Available in 100 A, 200 A, 300 A and 320 A designs
- Available in 4- or 5-jaw configurations
- Underground service design is standard
- Bypass options (lever, horn) are available
- Solid top designs

Product Selection

UHTRP242363CH

Residential Pedestals

Ampere Rating	Jaws	Service	Bypass	Connections Line	Load	Opening, Hub or Closure Plate	Catalog Number
320	4	UG	—	3/8-inch studs	3/8-inch studs	Solid top	**1008847CH**
320	4	UG	Lever	#6–350 kcmil line and line neutral	2/0–250 kcmil load and load neutral	Solid top	**1009017CH** ①
300	4	UG	Lever	#6–350 kcmil line and line neutral	2/0–250 kcmil load and load neutral	Solid top	
200	4	UG	Horn	4/0 compression (line) 2/0 compression (neutral)	#6–250 kcmil load and load neutral	Solid top	**1006388CH**
200	4	UG	Horn	#8–350 kcmil	#8–350 kcmil	Solid top	**UHTRP242363CH**
200	4	UG	Horn	#6–350 kcmil line and line neutral	#6–250 kcmil load neutral	Solid top	**1008846CH**
200	4	UG	Horn	#6–350 kcmil line and line neutral	#6–250 kcmil load neutral	N/A	**1008961CH**
200	5	N/A	N/A	N/A	N/A	N/A	**1008966CH**
200	4	UG	—	#6–350 kcmil line and line neutral	#6–350 kcmil load and load neutral	Solid top	**1009264CH**
200	4	UG	—	4/0 compression (line) 2/0 compression (neutral)	#6–350 kcmil load and load neutral	Solid top	**1009265CH**
100	4	UG	—	#6–350 kcmil line and line neutral	#6–250 kcmil load neutral	Solid top	**1009078CH**

Pedestal Extension Kits

Connections Line	Load	Catalog Number
Pedestal extension kit for 1008846CH	Pedestal extension kit for 1008846CH	**1009021CH**
		1009022CH
		1009026CH

Dimensions

Approximate Dimensions in Inches (mm)

Residential Pedestals

Catalog Number	Height	Width	Depth
1008847CH	58.00 (1473.2)	12.97 (329.4)	4.93 (125.2)
1009017CH ①	63.00 (1600.2)	12.96 (329.2)	4.93 (125.2)
1006388CH	61.00 (1549.4)	8.96 (227.6)	4.93 (125.2)
UHTRP242363CH	62.63 (1590.8)	8.97 (227.8)	4.94 (125.5)
1008846CH	70.00 (1778.0)	11.00 (279.4)	6.00 (152.4)
1008961CH	69.93 (1776.2)	N/A	6.00 (152.4)
1008966CH	N/A	N/A	N/A
1009264CH	74.00 (1879.6)	8.96 (227.6)	4.93 (125.2)
1009265CH	74.00 (1879.6)	8.97 (227.8)	4.94 (125.5)
1009078CH	69.93 (1776.2)	11.00 (279.4)	6.00 (152.4)

Pedestal Extension Kits

Catalog Number	Height	Width	Depth
1009021CH	18.00 (457.2)	11.00 (279.4)	6.00 (152.4)
1009022CH	18.00 (457.2)	12.96 (329.2)	4.93 (125.2)
1009026CH	30.00 (762.0)	12.96 (329.2)	4.93 (125.2)

Note

① 200 A breakers.

Product Description

This section will help you better understand the features and benefits of the 125 A and 200 A Eaton designed meter socket.

Features and Benefits

Construction Features

1. High strength, glass-filled meter block assembly, lay-in connectors with captive slide nut and screw.

2. 100% plated copper alloy meter jaw with reinforcing spring clip and meter guide.

3. Extruded neutral lug with integral triplex ground and quadplex ground provision.

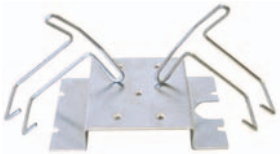

4. Bridge and meter supports are 100% zinc chromate plated.

200 A Ringless Block Assembly With Horn Bypass

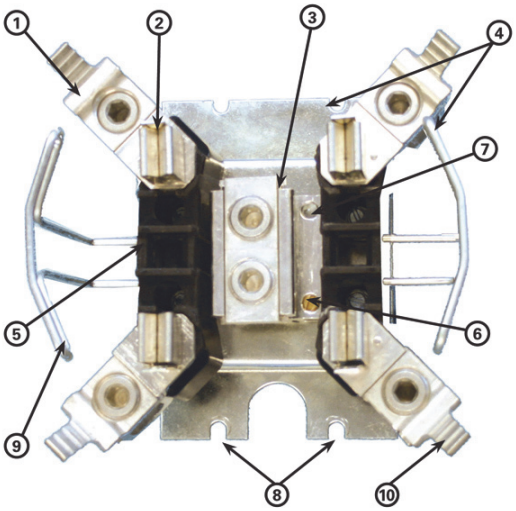

5. Fifth terminal locating hole in 9 o'clock position.
6. Triplex ground is a standard feature.
7. Quadplex ground provision.
8. Durable "four-point" bridge mounting (2 top, 2 bottom).
9. Extra rigid meter support for ringless sockets.
10. Optional, integral horn bypass extruded on slide nut. Horn is ribbed for secure attachment to utility bypass jumpers. Field-installable horn bypass kit available.

Product Selection

Meter Socket Accessories

Description	Part Number
Hub Closure Plates	
Hub closure plate meter socket accessories	**ARP00002CHB**
Clam shell hub closure plate meter socket accessories	**ARP00002CHBCS**
1-inch hub closure plate meter socket accessories	**ARP00003CH1**
Clam shell 1-inch hub closure plate—small opening	**ARP00003CH1CS**
1-1/4-inch hub closure plate meter socket accessories	**ARP00004CH12**
Clam shell 1-1/4-inch hub closure plate—small opening	**ARP00004CH12CS**
1-1/2-inch hub closure plate meter socket accessories	**ARP00005CH15**
Clam shell 1-1/2-inch hub closure plate—small opening	**ARP00005CH15CS**
2-inch hub closure plate meter socket accessories	**ARP00006CH2**
Aluminum hub closure plate for single sockets	**ARP00008CH**
Large hub cover plate	**ARP00016CHB**
Hubs	
2-inch hub with large diameter opening	**ARP00017CH2**
2-1/2-inch hub for meter socket accessories	**ARP00007CH25**
Clam shell 2-1/2-inch hub for meter socket accessories	**ARP00007CH25CS**
2.5-inch hub with large diameter opening	**ARP00018CH25**
3-inch hub	**ARP00019CH3**
3-1/2-inch hub for meter sockets	**ARP00020CH35**
4-inch hub	**ARP00021CH4**
Hub adapter from large opening to small opening	**ARP00015CHAP**
Lug Kits	
(2) #6–250 kcmil, double barrel lug for 4, 5 and 7 terminal 3/8-inch stud sockets	**ARP00118CH**
#4–600 or (2) 1/0–250 kcmil, single barrel lug for 4, 5 and 7 terminal 3/8-inch stud sockets	**ARP00429CH**
#6–350 kcmil, single barrel lug for 4, 5 and 7 terminal 3/8-inch stud sockets	**ARP00119CH**
#4–600 kcmil, single barrel lug for 4, 5 and 7 terminal 3/8-inch stud sockets	**ARP00129CH**
(2) #6–350 kcmil, double barrel lug for 4 terminal 3/8-inch stud sockets	**ARP00427CH**
Miscellaneous	
Screw sealing ring for single meter sockets	**ARP00027CH**
Fifth jaw kit	**ARP00035CHJ**
Fifth jaw for bolt on meter	**ARP00326CH**
Neutral insulating kit for lever bypass sockets only	**ARP00759CH**
100 A meter socket horn cap assembly kit	**ARP00777CH**
Fifth jaw kit for 320 A offset socket	**ARP00862CH**
HQ anti-inversion clip for single meter sockets	**ARP00984CH**
Fifth jaw for Chicago and Wisconsin pedestal	**ARP01085CH**
350 kcmil BNS cap assembly kit for meter sockets	**ARP01226CH**
Right hand block assembly with Z Bar	**ARP01258CH**
Left hand block assembly with Z Bar	**ARP01414CH**
Meter pack trough closure plate kit	**ARP01565CH**
2/0 connector kit for MBB and MBP socket breaker	**ARP01612CH**

Cross-Reference

Meter Sockets

Description	Manufacturer Eaton Part Number	Milbank Part Number
125 A, OH/UG, ringless, triplex ground, hub opening	**UTRS101BE**	**U7487-RL-TG**
125 A, OH/UG, ringless, triplex ground, hub cover plate	**UTRS101CE**	**U7487-XL-TG**
125 A, OH/UG, ringless, triplex ground, hub opening, horn bypass	**UHTRS101BE**	**U7487-RL-TG-KK**
125 A, OH/UG, ringless, triplex ground, hub cover plate, horn bypass	**UHTRS101CE**	**U7487-XL-TG-KK**
125 A, OH/UG, ringless, triplex ground, hub opening, fifth terminal	**UTRS101BCH + MSR5TK**	**U7487-RL-TG-5T**
125 A, OH/UG, ringless, triplex ground, hub cover plate, fifth terminal	**UTRS101CE + MSR5TK**	**U7487-XL-TG-5T**
125 A, OH/UG, ringless, triplex ground, hub opening, horn bypass, fifth terminal	**UHTRS101BCH + MSR5TK**	**U7487-RL-TG-KK-5T**
125 A, OH/UG, ringless, triplex ground, hub cover plate, horn bypass, fifth terminal	**UGHTRS101CE + MSR5TK**	**U7487-XL-TG-KK-5T**
200 A, OH, ringless, triplex ground, hub opening	**UTRS202BCH**	**U7021-RL-TG**
200 A, OH, ringless, triplex ground, hub cover plate	**UTRS202CCH**	**U7021-XL-TG**
200 A, OH, ringless, triplex ground, hub opening, horn bypass	**UHTRS202BCH**	**U7021-RL-TG-KK**
200 A, OH, ringless, triplex ground, hub cover plate, horn bypass	**UHTRS202CCH**	**U7021-RL-TG-KK**
200 A, OH, ringless, triplex ground, hub opening, fifth terminal	**UGTRS202BCH**	**U7021-RL-TG-5T**
200 A, OH, ringless, triplex ground, hub cover plate, fifth terminal	**UGTRS202CCH**	**U7021-XL-TG-5T**
200 A, OH, ringless, triplex ground, hub opening, horn bypass, fifth terminal	**UGHTRS202BCH**	**U7021-RL-TG-KK-5T**
200 A, OH, ringless, triplex ground, hub cover plate, horn bypass, fifth terminal	**UGHTRS202CCH**	**U7021-RL-TG-KK-5T**
200 A, OH/UG, ringless, triplex ground, hub opening, 250 kcmil lugs	**UTRS212BCH**	**No cross (no 250 kcmil lugs)**
200 A, OH/UG, ringless, triplex ground, hub cover plate, 250 kcmil lugs	**UTRS212CCH**	**No cross (no 250 kcmil lugs)**
200 A, OH/UG, ringless, triplex ground, hub opening, horn bypass, 250 kcmil lugs	**UHTRS212BCH**	**No cross (no 250 kcmil lugs)**
200 A, OH/UG, ringless, triplex ground, hub cover plate, horn bypass, 250 kcmil lugs	**UHTRS212CCH**	**No cross (no 250 kcmil lugs)**
200 A, OH/UG, ringless, triplex ground, hub opening, fifth terminal, 250 kcmil lugs	**UGTRS212BCH**	**No cross (no 250 kcmil lugs)**
200 A, OH/UG, ringless, triplex ground, hub cover plate, fifth terminal, 250 kcmil lugs	**UGTRS212CCH**	**No cross (no 250 kcmil lugs)**
200 A, OH/ UG, ringless, triplex ground, hub opening, horn bypass, fifth terminal, 250 kcmil lugs	**UGHTRS212BCH**	**No cross (no 250 kcmil lugs)**
200 A, OH/UG, ringless, triplex ground, hub cover plate, horn bypass, fifth terminal, 250 kcmil lugs	**UGHTRS212CCH**	**No cross (no 250 kcmil lugs)**
200 A, OH/UG, ringless, triplex ground, hub opening, 350 kcmil lugs	**UTRS213BE**	**U7040-RL-TG**
200 A, OH/UG, ringless, triplex ground, hub cover plate, 350 kcmil lugs	**UTRS213CE**	**U7040-XL-TG**
200 A, OH/UG, ringless, triplex ground, hub opening, horn bypass, 350 kcmil lugs	**UHTRS213BE**	**U7040-RL-TG-KK**
200 A, OH/UG, ringless, triplex ground, hub cover plate, horn bypass, 350 kcmil lugs	**UHTRS213CE**	**U7040-XL-TG-KK**
200 A, OH/UG, ringless, triplex ground, hub opening, fifth terminal, 350 kcmil lugs	**UGTRS213BE**	**U7040-RL-TG-5T**
200 A, OH/UG, ringless, triplex ground, hub cover plate, fifth terminal, 350 kcmil lugs	**UGTRS213CE**	**U7040-XL-TG-5T**
200 A, OH/ UG, ringless, triplex ground, hub opening, horn bypass, fifth terminal, 350 kcmil lugs	**UGHTRS213BE**	**U7040-RL-TG-KK-5T**
200 A, OH/UG, ringless, triplex ground, hub cover plate, horn bypass, fifth terminal, 350 kcmil lugs	**UGHTRS213CE**	**U7040-XL-TG-KK-5T**
200 A, UG, ringless, triplex ground, solid top	**UTRS223ACH**	**U1980-0-TG**
200 A, UG, ringless, triplex ground, solid top, horn bypass	**UHTRS223ACH**	**U1980-0-TG-KK**
200 A, UG, ringless, triplex ground, solid top, fifth terminal	**UGTRS223ACH**	**U1980-O-TG-5T**
200 A, UG, ringless, triplex ground, solid top, horn bypass, fifth terminal	**UGHTRS223ACH**	**U1980-O-TG-KK-5T**

Lever Bypass

Description	Manufacturer Eaton Part Number	Milbank Part Number
200 A, OH, lever bypass, 4 terminal, small hub opening	UTE4203BCH	U9800-RL
200 A, OH, lever bypass, 4 terminal, hub cover plate	UTH4203CCH	U9800-XL
200 A, OH, lever bypass, 4 terminal, large hub opening	UTH4203TCH	U9800-R
200 A, OH, lever bypass, 4 terminal, large hub cover plate	UTH4203UCH	U9800-X
200 A, OH, lever bypass, 5 terminal, small hub opening	UTE5203BCH	U4550-RL
200 A, OH, lever bypass, 5 terminal, hub cover plate	UTH5203CCH	U4550-XL
200 A, OH, lever bypass, 5 terminal, large hub opening	UTH5203TCH	U9559-R
200 A, OH, lever bypass, 5 terminal, large hub cover plate	UTH5203UCH	U9550-X
200 A, OH, lever bypass, 7 terminal, small hub opening	UTE7203BCH	U4701-RL
200 A, OH, lever bypass, 7 terminal, hub cover plate	UTH7203CCH	U4701-XL
200 A, OH, lever bypass, 7 terminal, large hub opening	UTE7203TCH	U4701-R
200 A, OH, lever bypass, 7 terminal, large hub cover plate	UTH7203UCH	U4701-X
200 A, OH/UG, lever bypass, 4 terminal, small hub opening	UTE4213BCH	U9801-RL
200 A, OH/UG, lever bypass, 4 terminal, hub cover plate	UTE4213CCH	U9801-XL
200 A, OH/UG, lever bypass, 4 terminal, large hub opening	UTE4213TCH	U9801-R
200 A, OH/UG, lever bypass, 4 terminal, large hub cover plate	UTH4213UCH	U9801-XL
200 A, OH/UG, lever bypass, 4 terminal, large hub opening with adapter plate	UTE4213ZCH	U9801-RRL
200 A, OH/UG, lever bypass, 4 terminal, large hub opening with adapter and cover plate	UTH4213YCH	U9801-RXL
200 A, OH/UG, lever bypass, 5 terminal, small hub opening	UTE5213BCH	U4551-RL
200 A, OH/UG, lever bypass, 5 terminal, hub cover plate	UTE5213CCH	U4551-XL
200 A, OH/UG, lever bypass, 5 terminal, large hub opening	UTE5213TCH	U9551-R
200 A, OH/UG, lever bypass, 5 terminal, large hub cover plate	UTH5213UCH	U9551-X
200 A, OH/UG, lever bypass, 5 terminal, large hub opening with adapter plate	UTE5213ZCH	U9551-RRL or U4551-RRL
200 A, OH/UG, lever bypass, 5 terminal, large hub opening with adapter and cover plate	UTH5213YCH	U9551-RXL or U4551-RXL
200 A, OH/UG, lever bypass, 7 terminal, small hub opening	UTE7213BCH	U9701-RL or U4701-RL
200 A, OH/UG, lever bypass, 7 terminal, hub cover plate	UTE7213CCH	U9701-XL or U4701-XL
200 A, OH/UG, lever bypass, 7 terminal, large hub opening	UTE7213TCH	U9701-R or U4701-R
200 A, OH/UG, lever bypass, 7 terminal, large hub cover plate	UTE7213UCH	U9701-RX or U4701-RX
200 A, OH/UG, lever bypass, 7 terminal, large hub opening with adapter plate	UTE7213ZCH	U9701-RRL or U4701-RRL
200 A, OH/UG, lever bypass, 7 terminal, large hub opening with adapter and cover plate	UTH7213YCH	U9701-RXL or U4701-RXL
320 A, OH, lever bypass, 4 terminal, large hub opening	UTH4300TCH	U1079-R or U1797-R
320 A, OH, lever bypass, 4 terminal, large hub cover plate	UTH4300UCH	U1079-X or U1797X
320 A, OH/UG, lever bypass, 4 terminal, large hub opening	UTH4330TCH	U2448-R or U2124-R
320 A, OH/UG, lever bypass, 4 terminal, large hub cover plate	UTH4330UCH	U2448-RX or U2124-RX
320 A, OH, lever bypass, 7 terminal, large hub opening	UTH7300TCH	—
320 A, OH, lever bypass, 7 terminal, large hub cover plate	UTH7300UCH	—
320 A, OH/UG, lever bypass, 7 terminal, large hub opening	UTH7330TCH	U2120-R
320 A, OH/UG, lever bypass, 7 terminal, large hub cover plate	UTH7330UCH	U2120-X

Accessories

Description	Manufacturer Eaton Part Number	Milbank Part Number
Small hub cover plate	**ARP00002CHB**	**A7551**
1-inch hub	**ARP00003CH1**	**A7514**
1-1/4-inch hub	**ARP00004CH12**	**A7515**
1-1/2-inch hub	**ARP00005CH15**	**A7516**
2-inch hub	**ARP00006CH2**	**A7517**
2-1/2-inch hub	**ARP00007CH25**	**A7518**
3-inch hub	**ARP00019CH3**	**A8110**
3-1/2-inch hub	**ARP00020CH35**	**A8111**
4-inch hub	**ARP00021CH4**	**A8112**
Large to small hub opening adapter plate	**ARP00015CHAP**	**S8324**
Large hub cover plate	**ARP00016CHB**	**S9064**

Mechanical Lugs

Contents

Description

Mechanical Lugs

Product Description

- Single lug
- Extended tang single lug
- Extended tang triple lug
- Double lug
- Extended tang double lug
- Extended tang quadruple lug

Product Selection

Mechanical Lugs

Description	Style Number
Single #14–#6 mechanical lug	**ESL146**
Single #14–2/0 mechanical lug	**ESL1420**
Single #6–250 kcmil mechanical lug	**ESL6250**
Single #4–500 kcmil mechanical lug	**ESL4500**
Double #14–2/0 mechanical lug	**EDL1420**
Double #6–250 kcmil mechanical lug	**EDL6250**
Extended tang single lug #6–350 kcmil	**EPBSL6350**
Extended tang single lug 300–800 kcmil	**EPBSL300800**
Extended tang double lug #6–350 kcmil	**EPBDL6350**
Extended tang double lug 300–800 kcmil	**EPBDL300800**
Extended tang triple lug #6–350 kcmil	**EPBTL6350**
Extended tang triple lug 300–800 kcmil	**EPBTL300800**
Extended tang quadruple lug #6–350 kcmil	**EPBQL6350**
Extended tang quadruple lug 300–750 kcmil	**EPBQL300800**
Extended tang single lug #2–600 kcmil	**EPBSL2600**
Extended tang single lug 500–1000 kcmil	**EPBSL5001000**
Extended tang triple lug #2–600 kcmil	**EPBTL2600**

Dimensions

Approximate Dimensions in Inches (mm)

Mechanical Lugs

Style Number	Height	Width	Length
ESL146	2.50 (63.5)	8.25 (82.6)	3.50 (88.9)
ESL1420	2.50 (63.5)	10.50 (266.7)	3.50 (88.9)
ESL6250	2.50 (63.5)	10.50 (266.7)	3.50 (88.9)
ESL4500	2.50 (63.5)	10.50 (266.7)	3.50 (88.9)
EDL1420	3.50 (88.9)	4.00 (101.6)	3.50 (88.9)
EDL6250	3.50 (88.9)	3.75 (95.3)	4.50 (114.3)
EPBSL6350	2.50 (63.5)	8.25 (82.6)	3.50 (88.9)
EPBSL300800	2.50 (63.5)	10.50 (266.7)	3.50 (88.9)
EPBDL6350	3.50 (88.9)	4.50 (114.3)	5.50 (139.7)
EPBDL300800	3.00 (76.2)	10.50 (266.7)	5.50 (139.7)
EPBTL6350	3.50 (88.9)	4.50 (114.3)	5.50 (139.7)
EPBTL300800	2.50 (63.5)	10.00 (254.0)	5.75 (146.0)
EPBQL6350	2.25 (57.2)	6.50 (165.1)	6.00 (152.4)
EPBQL300800	4.25 (108.0)	8.50 (215.9)	8.50 (215.9)
EPBSL2600	2.50 (63.5)	8.25 (82.6)	3.50 (88.9)
EPBSL5001000	2.50 (63.5)	10.50 (266.7)	3.50 (88.9)
EPBTL2600	2.25 (57.2)	6.50 (165.1)	6.00 (152.4)

Communication Grounding Device

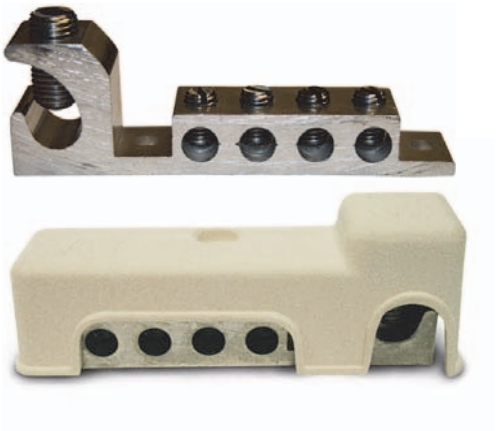

Contents

Description	*Page*
Wiring Diagram	**V1-T4-36**
Dimensions	**V1-T4-36**

Product Description

This product is required per the 2008 NEC Article 250.94 "Bonding for Other Systems."

This product is applied externally to residential homes, so that communications systems devices such as satellite, TV, cable and CATV can be properly bonded at a single point. This device has two mounting holes that can be used for easy installation.

Features, Benefits and Functions

Communication Grounding Device Features

- Lay-in lug for ease of installation
- Four bonding terminals
- Heavy-duty zinc-plated steel screws included
- Two mounting holes to securely hold device into place
- For use with copper and aluminum conductors

Cover Features

- Outdoor rated reinforced glass polyester compound
- Suitable for UV exposure
- Paintable exterior, allowing for matching of exterior of home

Standards and Certifications

- ETL listed

Product Selection

Communication Grounding Device

Wire Range Bonding Conductor	Wire Range Ground Electrode	Quantity	Catalog Number
#14–#2–STR–SOL–CU #12–#2–SRT–SOL–AL	#8–1/0–STR–SOL–CU/AL	(1) Clamshell	**MSEGR2CS**
#14–#2–STR–SOL–CU #12–#2–SRT–SOL–AL	#8–1/0–STR–SOL–CU/AL	(10) Bulk pack	**MSEGR2**

Wiring Diagram

Installation and Configuration

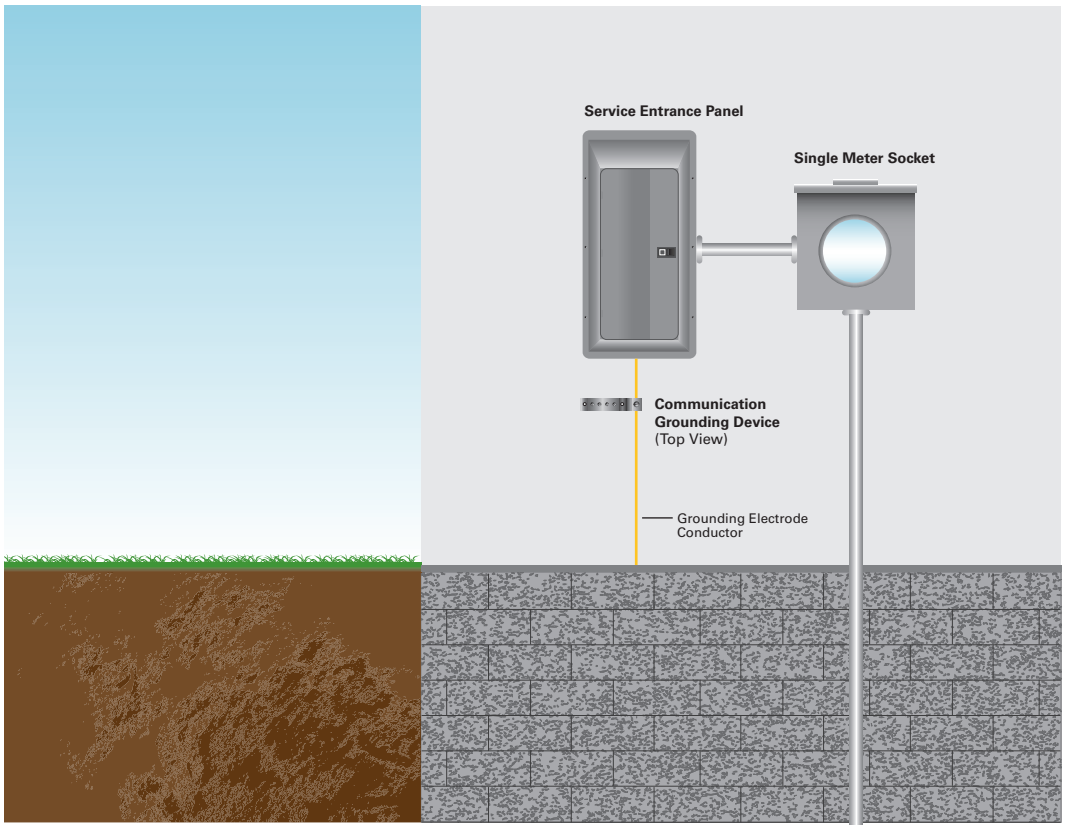

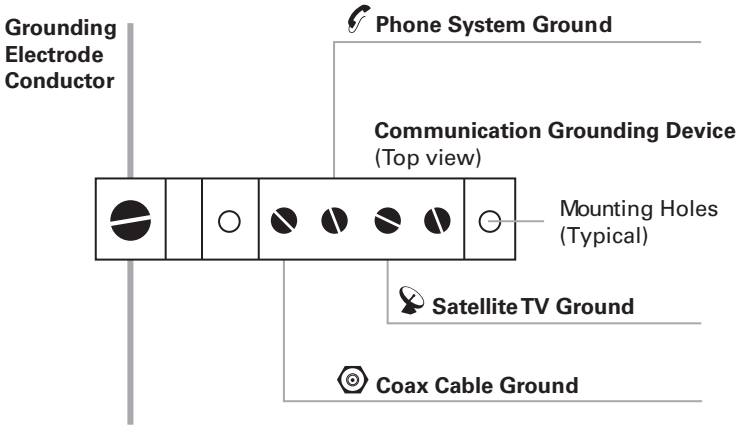

Dimensions

Approximate Dimensions in Inches (mm)

Communication Grounding Device

Catalog Number	Length	Width	Height
MSEGR2CS	0.75 (19.1)	3.90 (99.1)	1.20 (30.5)
MSEGR2	0.75 (19.1)	3.90 (99.1)	1.20 (30.5)

Residential Meter Breakers

Contents

Description	*Page*
Residential Meter Breakers	
Non-EUSERC Combination Service Entrance Devices 100–200 A Styles	**V1-T4-39**
Meets EUSERC Requirements Service Entrance Devices 100–225 A.	**V1-T4-48**
West Coast All-In-One Design	**V1-T4-59**
Mechanical Interlock Cover	**V1-T4-65**
House Panels	**V1-T4-75**
Commercial Safety Sockets	**V1-T4-83**
CH Style Renovation Solutions	**V1-T4-86**
Aluminum Meter Breakers	**V1-T4-87**

Residential Meter Breakers

Product Description

A meter breaker is service entrance equipment that consists of a single meter socket and loadcenter (circuit breaker distribution section) or meter socket and main breaker combined in one enclosure. Sometimes called Combos, All-in-Ones, Meter Centers or Meter Mains, these units are increasing in popularity as the socket and loadcenter or main breaker are located in one location, thus providing the contractor with a labor and material savings when installing.

Application Description

In addition to residential installations, meter breakers are equally applicable for rural service entrance, mobile homes and construction site temporary power. Meter breakers are most often sold in the western, southwestern and southeastern United States. The popularity of meter breakers is continuing to increase as more utilities deregulate and pass the responsibility of supplying watthour meter sockets on to the electrical contractor.

Application Considerations

Eaton has the meter breaker to meet your application, offering:

- Non-EUSERC
- EUSERC/West Coast
- House panels
- Commercial safety socket

Non-EUSERC (Page V1-T4-39)

Eaton's line of non-EUSERC meter breakers are designed for customers served by utilities that are not members of EUSERC.

EUSERC/West Coast (Page V1-T4-59)

Eaton's line of EUSERC required devices adhere to the agreed upon standards. EUSERC utilities are predominately located in the western United States, but some eastern and midwestern utilities are also members. These units can also be used in many Non-EUSERC areas.

House Panels (Page V1-T4-75)

CH and BR Styles (**Page V1-T4-76**).

Meter breaker device rated at 300–400 A. Applied in EUSERC and non-EUSERC areas.

Commercial Safety Sockets (Page V1-T4-83)

Applied in EUSERC and non-EUSERC service areas and used in commercial applications.

Features, Benefits and Functions

- Both Type BR and CH branch circuit breaker styles available
- Meets latest NEC wire bending space requirements
- Slotted sealing screws at hub with sealing provision provided
- Surface units are supplied with mounting tabs
- Semi-flush units are supplied with stucco flange
- Meter socket ring landing will accept locking security rings
- Overhead or underground service
- Fifth jaw can be installed in the 3 o'clock or 9 o'clock position
- Semi-flush with nail flange or surface mounting
- Meter mounting and underground pull sections are utility sealable
- Units are rated a minimum of 10 kAIC; some units are 22 kAIC
- Numerous units supplied with center keyhole for ease of mounting
- NEMA 3R rainproof construction

Standards and Certifications

- UL Specification 414 (socket)
- UL File Number E52977
- AEIC-EEI-NEMA Standards (MSJ-7)
- Meet EUSERC utility requirements where noted
- Documented seismic qualified—UBC and CBC Title 24
- UL Specification 67 (panel)

Listed

Technical Data and Specifications

- Ratings single-phase, three-wire, 120/240 Vac
- 100–225 A main breaker and main lug types
- 10,000 A rms symmetrical short-circuit rating
- Available kAIC ratings: 10 k with BW breaker, 22 k with CSR breaker and 35 k with CSH breaker

Consult TD.31F.01.T.E for dimensions, wiring diagrams and knockouts.

Residential Meter Breakers

Standard Design Non-EUSERC Panel

Compact Design

Contents

Description	*Page*
Residential Meter Breakers	**V1-T4-37**
Non-EUSERC Combination Service Entrance Devices 100–200 A Styles	
Meets EUSERC Requirements Service Entrance Devices 100–225 A.	**V1-T4-48**
West Coast All-In-One Design	**V1-T4-59**
Mechanical Interlock Cover	**V1-T4-65**
House Panels	**V1-T4-75**
Commercial Safety Sockets	**V1-T4-83**
CH Style Renovation Solutions	**V1-T4-86**
Aluminum Meter Breakers	**V1-T4-87**

Non-EUSERC Combination Service Entrance Devices 100–200 A Styles

Product Description

A device that may include a meter socket, main breaker and loadcenter section within the same enclosure.

- Meter main = meter socket and main breaker
- Meter breaker = meter socket, main breaker and loadcenter section

Application Description

Eaton's line of non-EUSERC meter breakers are designed for customers served by utilities that are not members of EUSERC.

Features, Benefits and Functions

Meter Mains and All-in-Ones

- Single-phase, three-wire, 120/240 Vac,10 kAIC
- Larger lay-in lugs and 3-inch (76.2 mm) knockouts for ease of installation
- Box-type main lugs included
- Factory-installed neutral
- Hub provisions on top endwall. If hubs are required, order "DS" style
- Ring, ringless and ringless with horn bypass styles available
- Ringless style, provided with embossed covers and security latch for utility company lock
- Padlockable device covers provide additional measure of safety and help prevent tampering
- NEMA 3R rainproof construction

Meter Mains

- Meter socket and main breaker
- Stainless steel latches on meter compartments in MBP types
- No distribution section included

All-in-Ones

- Meter socket and loadcenter distribution section
- Stainless steel latches on meter compartments
- Several designs with horn bypass and fifth jaw
- Center-fed main breaker, lugs or provision
- Uses Type BR 1-inch (25.4 mm) wide branch breakers
- Special channel for top exit

Catalog Number Selection

MB 20 40 B 200 BT S _

Meter Breaker Type
- **MB** = 1-inch BR Type
- **MBE** = 1-inch BR Type—EUSERC
- **CMB** = 3/4-Inch (19.1 mm) CH Type
- **CMBE** = 3/4-inch (19.1 mm) CH Type—EUSERC

Spacing
Number of spaces

Poles
Maximum number of poles

Main
- **B** = Main breaker included
- **P** = Provision for main
- **L** = Main lug

Amperes
Amperage of unit

Breaker Feed
- **BT** = Bottom and top
- **B** = Bottom only
- **T** = Top only

Mounting
- **S** = Surface
- **F** = Flush/stucco

Accessories/Modifications
- **D** = 5th jaw and horn bypass
- **CU** = Copper
- **C** = Single cover compact design
- **CR** = Two cover compact design

Product Selection

Note: See knockout drawings on **Pages V1-T4-68 through V1-T4-74** for hub information.

Standard Design Non-EUSERC Panel

Compact Design

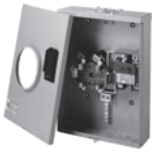

Combination Service Entrance Devices—Non-EUSERC

Ampere Rating	Bypass	Service	kAIC	Jaws	Distribution	Main	Branch Breaker Type	Dimensions and Enclosure Shape ①	Page Numbers Wiring	Page Numbers Knockout ①	Catalog Number
Ring Style Meter Mains (no distribution section included)											
150	None	OH/UG	10	4	None	CSR2150	None	13	**V1-T4-46**	**V1-T4-74**	**MBB150BTSCR**
150	None	OH/UG	22	4	None	CSR2150	None	3	**V1-T4-43**	**V1-T4-70**	**CMBB150BTS** ⑥⑦
200	None	OH/UG	10	4	None	CSR2200	None	13	**V1-T4-46**	**V1-T4-74**	**MBB200BTSCR**
200	None	OH/UG	②	4	None	Provision ④⑤	None	3	**V1-T4-43**	**V1-T4-70**	**CMBP200BTS** ⑥⑦
200	None	OH/UG	22	4	None	CSR2200	None	3	—	**V1-T4-70**	**CMBB200BTS** ⑥⑦
Ringless Meter Mains (no distribution section included)											
150	None	OH/UG	10	4	None	CSR2150	None	13	**V1-T4-46**	**V1-T4-74**	**MBB150BTSC** ⑦
200	None	OH/UG	10	4	None	CSR2200	None	9	**V1-T4-47**	**V1-T4-74**	**MBB200BTS** ⑧
200	None	OH/UG	10	4	None	CSR2200	None	13	**V1-T4-46**	**V1-T4-74**	**MBB200BTSC** ⑦
150	None	OH/UG	10	4	None	CSR2125	None	9	**V1-T4-47**	**V1-T4-74**	**MBB150BTS**
200	None	OH/UG	②	4	None	Provision ③	None	9	**V1-T4-47**	**V1-T4-74**	**MBP200BTS** ⑦
200	Horn	OH/UG	②	5	None	Provision ③④	None	11	**V1-T4-45**	**V1-T4-74**	**MBP200SD**
200	Horn	OH/UG	②	5	None	Provision ③④	None	9	**V1-T4-47**	**V1-T4-74**	**MBP200BTSD**
100	Horn	OH/UG	10	5	None	Provision	None	15	—	**V1-T4-74**	**CHMMB100BTS**
150	Horn	OH/UG	10	5	None	CSR2150	None	16	—	**V1-T4-74**	**CHMMB150BTS**
200	Horn	OH/UG	10	5	None	CSR2200	None	16	—	**V1-T4-74**	**CHMMB200BTS**
150	None	OH/UG	10	4	4/8	CSR	BR	—	—	—	**MB48B150TSG**
200	None	OH/UG	10	4	4/8	CSR	BR	—	—	—	**MB48B200BTSG**
200	Lever	OH/UG	22	4	8/16	CSR	BR	—	—	—	**MBX816B200BTS**
200	Lever	OH/UG	22	4	20/40	CSR	BR	—	—	—	**MBX2040B200BTS**

Notes

① See **Page V1-T4-68** for box details.
② Per installed main breaker rating.
③ When a provision for main is provided, order one of the main breakers listed in **Page V1-T4-43**. Panels are dual labeled to accept Types BW, CSR or CSH Main Breakers.
④ MCBK225 lug kit is needed for load side cable connection for Meter Mains. Please order separately.
⑤ When a provision for main is provided, order one of the main breakers listed in this table. Panels are labeled to accept Type CSR Main Breakers.
⑥ Copper bus.
⑦ One-piece cover on utility side, Florida approved.
⑧ Single cover design.
⑨ Xcel approved.

Note: See knockout drawings on **Pages V1-T4-68 through V1-T4-74** for hub information.

Combination Service Entrance Devices—Non-EUSERC, continued

Ampere Rating	Bypass	Service	kAIC	Jaws	Distribution	Main	Branch Breaker Type	Dimensions and Enclosure Shape ①	Page Numbers Wiring	Page Numbers Knockout ①	Catalog Number
Ring Style All-in-Ones (includes distribution section)											
125	None	OH/UG	②	4	2/4	None—refer to Distribution CSR2150	CH	2	**V1-T4-43**	**V1-T4-70**	**CMB24L125BTS** ④⑤
150	None	OH/UG	22	4	8		CH	3	**V1-T4-44**	**V1-T4-70**	**CMB88B150BTS** ④⑤
200	None	OH/UG	10	4	4/8	CSR2200	BR	3	**V1-T4-44**	**V1-T4-70**	**MB48B200BTS** ⑤⑥
200	None	OH/UG	22	4	8	CSR2200	CH	3	**V1-T4-44**	**V1-T4-70**	**CMB88B200BTS** ④⑤⑥
200	None	UG	22	4	32/42	CSR2200	CH	7	**V1-T4-43**	**V1-T4-69**	**CMB3242B200BS** ④⑤
200	None	OH/UG	22	—	42/42	—	CH	—	—	—	**CMB4242B200BTS** ④
Ringless All-in-Ones (includes distribution section)											
125	None	OH/UG	22	4	4/8	CSR2125	BR	21	—	**V1-T4-73**	**MBT48B125BTS**
150	None	OH/UG	22	4	4/8	CSR2150	BR	21	**V1-T4-46**	**V1-T4-73**	**MBT48B150BTS**
150	Horn	OH/UG	10	5	8/16	BW2150	BR	11	—	—	**MB816B150STD** ⑦
150	Horn	OH/UG	10	5	20/40	BW2150	BR	11	**V1-T4-47**	**V1-T4-74**	**MB2040B150SD** ⑦
200	None	OH/UG	10	4	8/16	CSR2200	BR	10	**V1-T4-46**	**V1-T4-74**	**MB816B200BTS** ⑤⑥
200	None	OH/UG	10	4	8/16	CSR2200	BR	10	**V1-T4-46**	**V1-T4-74**	**MB816B200BTSCU** ④⑤⑥
200	Horn	OH/UG	10	5	8/16	BW2200	BR	11	—	—	**MB816B200STD** ⑦
200	None	OH/UG	②	4	8/16	Provision ③	BR	10	**V1-T4-46**	**V1-T4-74**	**MB816P200BTS** ⑤⑥
200	None	OH/UG	②	4	8/16	Provision ③	BR	10	**V1-T4-46**	**V1-T4-74**	**MB816P200BTSCU** ④⑤⑥
200	Horn	OH/UG	②	5	8/16	Provision ③	BR	11	**V1-T4-46**	**V1-T4-74**	**MB816P200STD** ⑥⑦
200	Horn	OH/UG	②	5	8/16	Provision ③	BR	10	**V1-T4-46**	**V1-T4-74**	**MB816P200BTSD** ⑥
200	None	OH/UG	10	4	12/12	CSR2200	CH	10	**V1-T4-44**	**V1-T4-70**	**CMB1212B200BTS** ④⑤⑥
200	None	OH/UG	②	4	6–2 Pole	Main lugs	CH	9	**V1-T4-45**	**V1-T4-71**	**CMB1212L200BTS** ④⑥
200	None	OH/UG	②	4	12/12	Provision ③	CH	10	**V1-T4-45**	**V1-T4-71**	**CMB1212P200BTS** ④⑤⑥
200	None	OH/UG	②	4	6–2 Pole	Main lugs	BR	9	**V1-T4-44**	**V1-T4-71**	**MB1212L200BTS** ⑥
200	None	OH/UG	22	4	24/24	CSR2200	CH	10	**V1-T4-44**	**V1-T4-74**	**CMB2424B200BTS** ④⑤
200	None	OH/UG	22	4	24/36	CSR2200	CH	10	**V1-T4-45**	**V1-T4-74**	**CMB2436B200BTS** ④
200	None	OH/UG	10	4	20/40	CSR2200	BR	10	**V1-T4-47**	**V1-T4-74**	**MB2040B200BTS** ④
200	None	OH/UG	②	4	20/40	Provision ③	BR	10	**V1-T4-47**	**V1-T4-74**	**MB2040P200BTS** ⑤
200	Horn	OH/UG	②	5	20/40	Provision ③	BR	11	**V1-T4-47**	**V1-T4-74**	**MB2040P200SD** ⑦
200	Horn	OH/UG	10	5	20/40	CSR2200	BR	10	**V1-T4-47**	**V1-T4-74**	**MB2040B200SD** ⑦
200	Lever	OH/UG	10	5	None	CSR2200	None	14	**V1-T4-45**	**V1-T4-73**	**CMBXB200BTS** ④
200	Lever	OH/UG	10	5	12/12	CSR2200	CH	14	**V1-T4-45**	**V1-T4-73**	**CMBX1212B200BTS** ④⑥
200	Lever	OH/UG	10	5	32/42	CSR2200	CH	14	**V1-T4-46**	**V1-T4-73**	**CMBX3242B200BTS** ④
200	Lever	OH/UG	10	5	None	Provision	None	14	**V1-T4-45**	**V1-T4-73**	**CMBXP200BTS** ④
200	Lever	OH/UG	10	5	12/12	Provision	CH	14	**V1-T4-45**	**V1-T4-73**	**CMBX1212P200BTS** ④⑥
200	Lever	OH/UG	10	5	32/42	Provision	CH	14	**V1-T4-46**	**V1-T4-73**	**CMBX3242P200BTS** ④
200	None	OH/UG	②	4	4/8	Provision	BR	21	**V1-T4-46**	**V1-T4-73**	**MBT48P200BTS** ⑥
200	None	OH/UG	22	4	4/8	CSR2200	BR	21	**V1-T4-46**	**V1-T4-73**	**MBT48B200BTS** ⑥

Notes

① See **Page V1-T4-68** for box details.
② Per installed main breaker rating.
③ When a provision for main is provided, order one of the main breakers listed on **Page V1-T4-43**. All panels are dual labeled to accept Types BW, CSR, CSH Main Breakers.
④ Copper bus.
⑤ One-piece cover on utility side, Florida approved.
⑥ Units come with feed-through lugs.
⑦ Xcel approved.

Main Breaker Selection Chart

Maximum Ampere Rating	Two-Pole Breaker Catalog Numbers			
	10 kAIC	25 kAIC	25 kAIC	35 kAIC
100	**BW2100**	**CSR2100**	**CSR2100N**	**CSH2100N**
125	**BW2125**	**CSR2125**	**CSR2125N**	**CSH2125N**
150	**BW2150**	**CSR2150**	**CSR2150N**	**CSH2150N**
200	**BW2200**	**CSR2200**	**CSR2200N**	**CSH2200N**
Load Side Lug Kit for BW and CSR Breakers ①			**MCBK225**	

Wiring Diagrams

Catalog Number—CMB3242B200BS

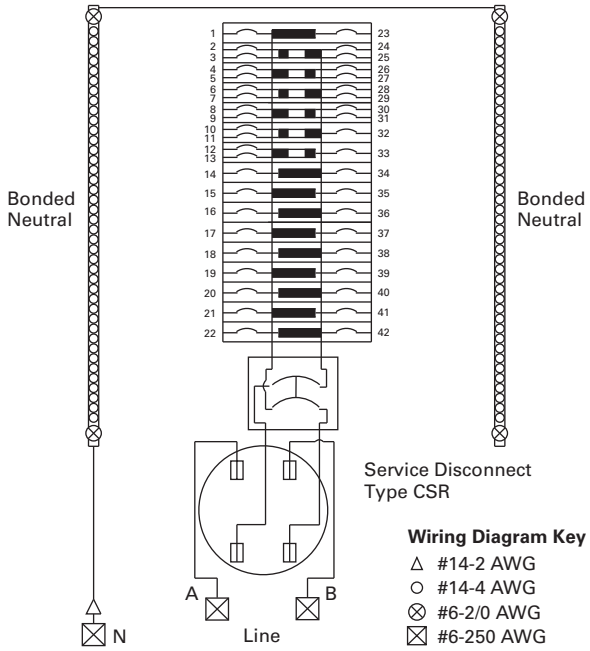

Catalog Numbers—CMBP200BTS, CMBB150BTS

Install 200 Ampere Maximum Service Disconnect Type CSR ②

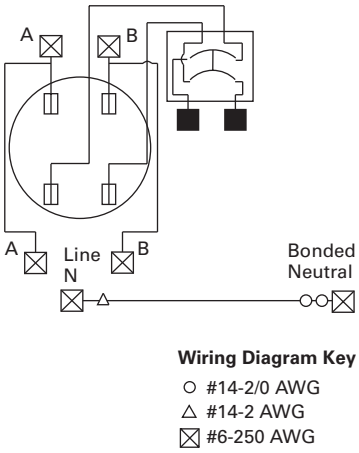

Catalog Number—CMB24L125BTS

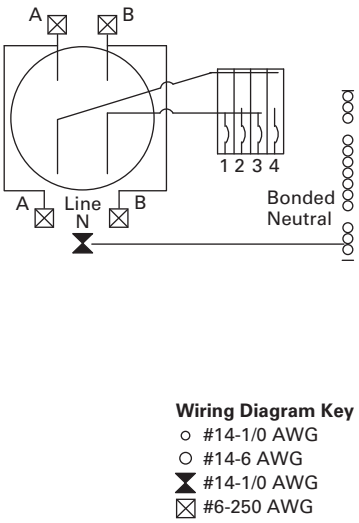

Notes

① When a provision for main is provided, order one of the main breakers listed in this table. All panels are dual labeled to accept Types BW, CSR and CSR Main Breakers.

② Factory-installed **MCBK225** Kit for C/B load lugs.

Catalog Numbers—CMB88B200BTS, CMB88B150BTS

Service Disconnect
Type CSR 200 Ampere Maximum

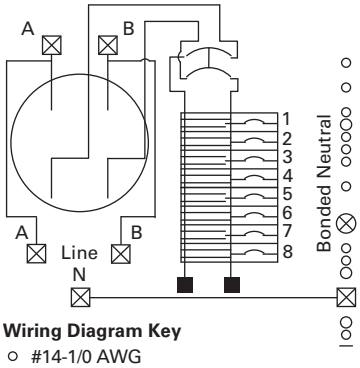

Wiring Diagram Key
- ○ #14-1/0 AWG
- ○ #14-6 AWG
- ⊗ #6-2/0 AWG
- ☒ #6-250 AWG
- ■ #4-300 AWG

Catalog Number—MB1212L200BTS

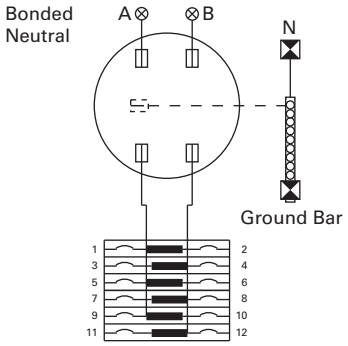

Wiring Diagram Key
- ○ #14-2/0 AWG
- ⊗ #6-350 kcmil
- ⧗ #6-300 kcmil

Catalog Number—MB48B200BTS

200 A Maximum
Service Disconnect
Type BW or CSR

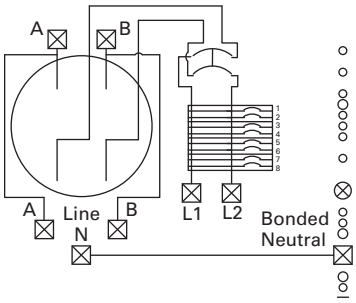

Wiring Diagram Key
- ○ #14-1/0 AWG
- ○ #14-6 AWG
- ⊗ #6-2/0 AWG
- ☒ #6-250 AWG

Catalog Number—CMB2424B200BTS

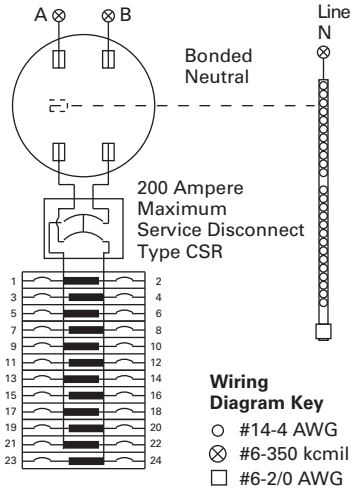

Wiring Diagram Key
- ○ #14-4 AWG
- ⊗ #6-350 kcmil
- □ #6-2/0 AWG
- ☒ #4-300 kcmil

Catalog Number—CMB1212B200BTS

5th Jaw Factory Installed
on CMB1212B200BTSD and
CMB1212P200BTSD Only

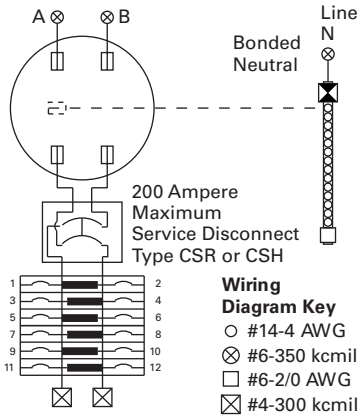

Wiring Diagram Key
- ○ #14-4 AWG
- ⊗ #6-350 kcmil
- □ #6-2/0 AWG
- ☒ #4-300 kcmil
- ⧗ #6-300 kcmil

Catalog Number—CMB1212L200BTS

5th Jaw Factory Installed
on CMB1212L200BTSD Only

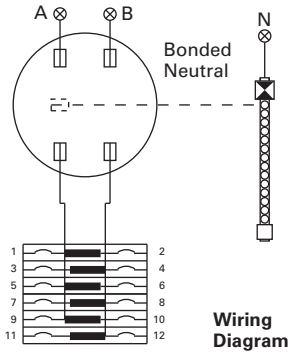

Wiring Diagram Key
- ○ #14-4 AWG
- ⊗ #6-350 kcmil
- □ #6-2/0 AWG
- ⧗ #6-300 kcmil

Catalog Numbers—MBP200SD, CMBXB200BTS, CMBXP200BTS

CMBXB200BTS &
CMBXP200BTS
included lever by
pass meter socket

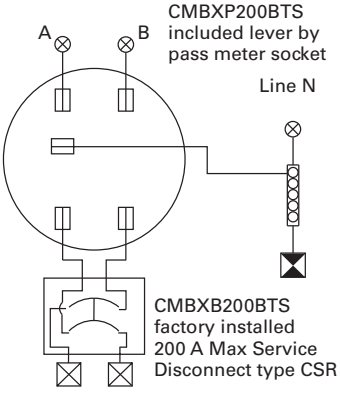

CMBXB200BTS
factory installed
200 A Max Service
Disconnect type CSR

MBP200SD
install 200 A Max
Service Disconnect
Type BW or CSR

Wiring
Diagram Key
- ○ #6-2/0 AWG
- ⊗ #6-350 kcmil
- ⊠ #1-300 kcmil
- ⧗ #6-300 kcmil

Catalog Number—CMB2436B200BTS

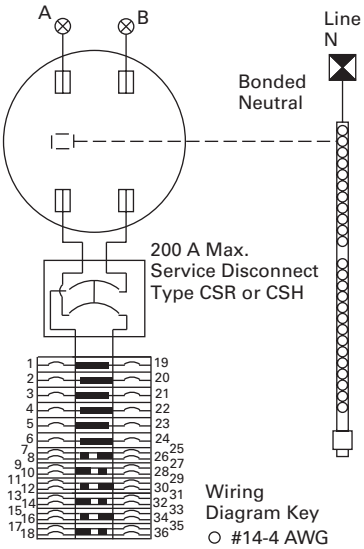

Wiring
Diagram Key
- ○ #14-4 AWG
- ⊗ #6-350 kcmil
- □ #6-2/0 AWG
- ⧗ #4-300 kcmil

Maximum of 12 twin
Breakers as Shown

Catalog Numbers—CMB1212B150BTS, CMBX1212B200BTS, CMB1212B200BTS, CMB1212P200BTS, CMBX1212P200BTS

5th Jaw Factory Installed
on CMB1212B200BTSD and
CMB1212P200BTSD Only

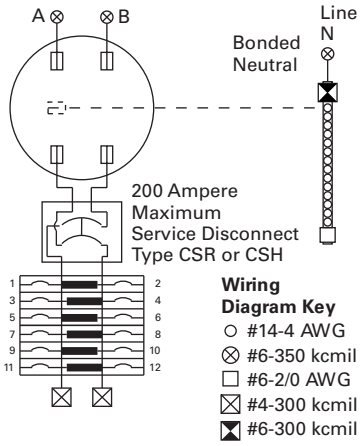

Wiring Diagram Key
- ○ #14-4 AWG
- ⊗ #6-350 kcmil
- □ #6-2/0 AWG
- ⊠ #4-300 kcmil
- ⧗ #6-300 kcmil

CMBX1212B200BTS &
CMBX1212P200BTS include
lever bypass meter socket

Catalog Numbers—MBT48B200BTS, MBT48P200BTS, MBT48B150BTS, MBT48P150BTS

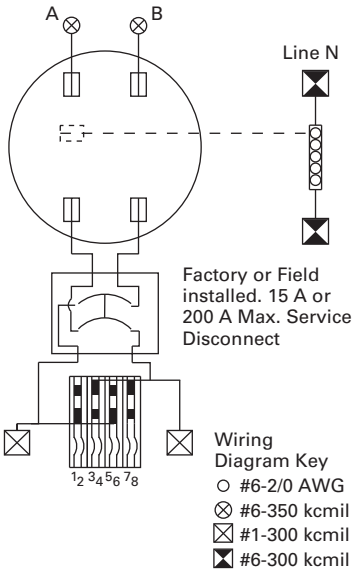

Catalog Numbers—MBB150BTSC, MBB150BTSCR, MBB200BTSCR and MBB200BTSC

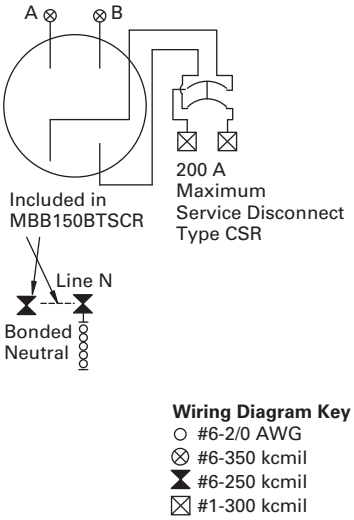

Catalog Numbers—CMBX3242P200BTS, CMBX3242B200BTS

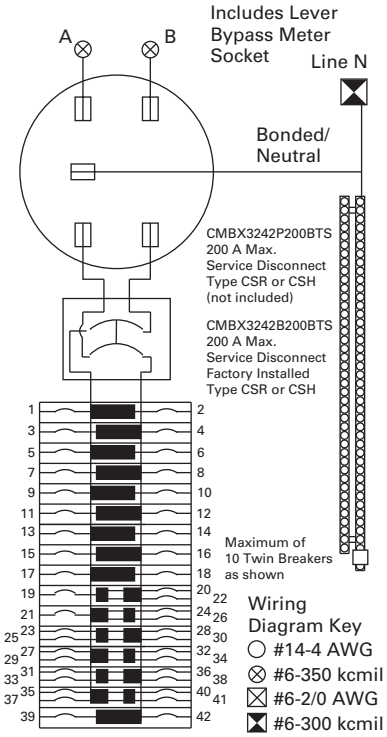

Catalog Numbers—MB816P200STD, MB816B200BTS, MB816B200BTSCU, MB816P200BTS, MB816P200BTSCU and MB816P200BTSD

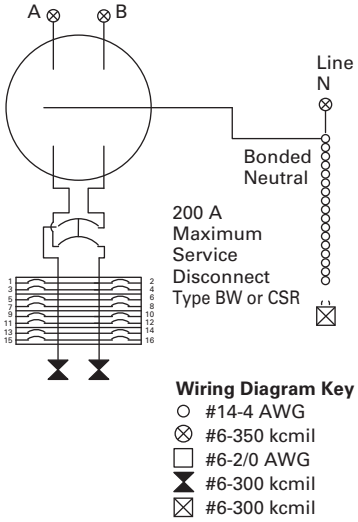

Catalog Numbers—MBB150BTS, MBP200SD, MBB200BTS, MBP200BTS, MBP200BTSD, CMBXB200BTS and CMBXP200BTS

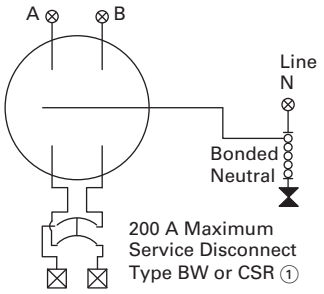

Wiring Diagram Key
- ○ #6-2/0 AWG
- ⊗ #6-350 kcmil
- ☒ #1-300 kcmil
- ⧗ #6-300 kcmil

Catalog Numbers—MB2040P200SD, MB2040B200BTS, MB2040P200BTS, MB2040B150SD and MB2040B200SD

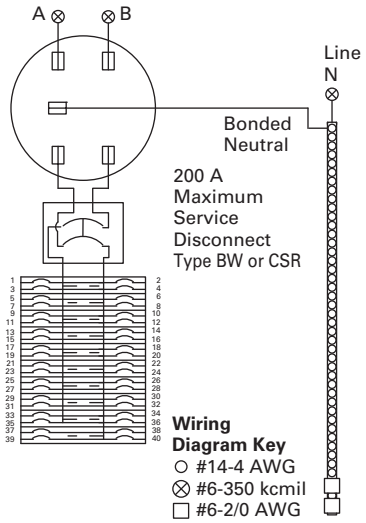

Residential Meter Breakers

Meets EUSERC Requirements Service Entrance Devices 100–225 A

Contents

Description	*Page*
Residential Meter Breakers	**V1-T4-37**
Non-EUSERC Combination Service Entrance Devices 100–200 A Styles	**V1-T4-39**
Meets EUSERC Requirements Service Entrance Devices 100–225 A	
West Coast All-In-One Design	**V1-T4-59**
Mechanical Interlock Cover	**V1-T4-65**
House Panels	**V1-T4-75**
Commercial Safety Sockets	**V1-T4-83**
CH Style Renovation Solutions	**V1-T4-86**
Aluminum Meter Breakers	**V1-T4-87**

Meets EUSERC Requirements Service Entrance Devices 100–225 A

Product Description

Eaton is proud to introduce a new line of West Coast/EUSERC Meter Breaker units. The new EUSERC devices complement the existing standard meter breaker devices. Customers who are interested in the complete meter breaker line of products can refer to Technical Data TD.31F.01.T.E.

Application Description

Eaton's line of EUSERC required devices adhere to the agreed upon standards. EUSERC utilities are predominately located in the western United States, but some eastern and midwestern utilities are also members. **These units can also be used in many Non-EUSERC areas.**

Features, Benefits and Functions

- Single-phase, three-wire, 120/240 V, 10 kAIC
- Larger 250 kcmil lugs and additional knockouts for ease of installation
- Box type main lugs are included
- Factory-installed neutrals
- Hub provisions on top endwall. If hubs are required, order "DS" type hubs
- Ring type sockets are provided with a sealing ring
- Padlockable device covers provide an additional measure of security and help prevent tampering
- Most units have center keyhole for easy one-person installation
- NEMA 3R rainproof construction

Catalog Number Selection

MBE 20 40 B 200 B S ____

Meter Breaker Type

MB	= 1-inch (25.4 mm) BR Type
MBE	= 1-inch (25.4 mm) BR Type—EUSERC
CMB	= 0.75-inch (19.1 mm) CH Type
CMBE	= 0.75-inch (19.1 mm) CH Type—EUSERC
MBED	= 7-inch (177.8 mm) deep
MBER	= 1-inch (25.4 mm) BR Type—EUSERC ranch
CMBER	= 0.75-inch (19.1 mm) CH Type—EUSERC ranch
MBEB	= 1-inch (25.4 mm) BR Type back-to-back
MBX	= Xcel approved lever bypass meter breaker

Spacing

Number of spaces

Poles

Maximum number of poles

Main

B = Main breaker included
P = Provision for main
L = Main lug

Amperes

Amperage of unit

Breaker Feed

BT = Bottom and top
B = Bottom only
T = Top only

Mounting

S = Surface
F = Flush/stucco

Accessories/Modifications

D = 5th jaw and horn bypass
CU = Copper
C = Single cover compact design
CR = Two cover compact design

Last Digits

G = Suffix = GA PWE spec
R ① = Suffix = ECCN renovation
PV = Suffix = PV rated units
6 = 2 x 6 construction
A = Aluminum enclosure

Note

① Not available in CR.

Product Selection

Note: See knockout drawings on **Pages V1-T4-68 through V1-T4-74** for hub information.

Combination Service Entrance Devices—EUSERC

Ampere Rating	By-pass	Service	kAIC	Jaws	Distribution	Main	Branch Breaker Type	Dimensions and Enclosure Shape ①	Page Numbers Wiring	Page Numbers Knockout ①	Catalog Number—Surface	Catalog Number—Flush
Ring Style Meter Mains (no distribution section included)												
125	None	OH/UG	②	4	2/4	MLO	BR	2	**V1-T4-55**	**V1-T4-70**	**MBE24L125BTS** ③	**MBE24L125BTF**
125	None	OH/UG	②	4	2/4	MLO	CH	2	**V1-T4-53**	**V1-T4-70**	**CMBE24L125BTS** ③④	—
150	None	OH/UG	22	4	None	CSR2150N	None	3	**V1-T4-52**	**V1-T4-70**	**CMBEB150BTS** ③④	—
200	None	OH/UG	10	4	None	CSR2200	None	3	**V1-T4-56**	**V1-T4-70**	**MBEB200BTS** ③	**MBEB200BTF**
200	None	OH/UG	22	4	None	CSR2200N	None	3	**V1-T4-52**	**V1-T4-70**	**CMBEB200BTS** ③④	—
200	None	OH/UG	②	4	2/4	MLO	BR	3	**V1-T4-56**	**V1-T4-70**	**MBE24L200BTS** ③	**MBE24L200BTF**
200	None	OH/UG	②	4	2/4	MLO	CH	3	**V1-T4-53**	**V1-T4-70**	**CMBE24L200BTS** ③④	—
Ring Style All-in-Ones (includes distribution section)												
100	None	OH/UG	10	4	12/24	BR2100	BR	2	**V1-T4-53**	**V1-T4-70**	**MBE1224B100BTS**	**MBE1224B100BTF**
100	None	UG	10	4	14/28	BR2100	BR	4	**V1-T4-55**	**V1-T4-69**	**MBE1428B100BS** ⑤	**MBE1428B100BF** ⑤
100	None	OH	10	4	12/24	BR2100	BR	9	**V1-T4-58**	**V1-T4-71**	**MBE1224B100TS**	—
125	None	OH/UG	10	4	12/24	BR2125	BR	2	**V1-T4-53**	**V1-T4-70**	**MBE1224B125BTS**	**MBE1224B125BTF**
125	None	OH	10	4	12/24	BR2125	BR	9	**V1-T4-58**	**V1-T4-71**	**MBE1224B125TS**	—
125	None	UG	10	4	18/36	BR2125	BR	5	**V1-T4-54**	**V1-T4-69**	—	**MBE1836B125BF** ⑤
150	None	OH/UG	10	4	4/8	CSR2150	BR	19	—	—	**MBER48B150BTS** ⑥⑦	—
150	None	OH/UG	22	4	8/8	CSR2150N	CH	19	—	—	**CMBER88B150BTS** ④⑥⑦	—
150	None	OH/UG	22	4	8	CSR2150N	CH	3	**V1-T4-53**	**V1-T4-70**	**CMBE88B150BTS** ④⑥	**CMBE88B150BTF** ④⑥
150	None	UG	22	4	32/42	CSR2150N	CH	7	**V1-T4-52**	**V1-T4-69**	**CMBE3242B150BS** ④⑤	—
150	None	UG	10	4	20/40	CSR2150	BR	6	**V1-T4-54**	**V1-T4-69**	—	**MBE2040B150BF** ⑤⑧

Notes

① See **Page V1-T4-68** for box details.
② Interrupting rating is dependent on the main breaker that is installed.
③ Reference drawing EUSERC DWG-301, G1.
④ Unit has copper bus.
⑤ Reference drawing EUSERC DWG-301/301A.
⑥ Units come with feed-through lugs.
⑦ Units include a two-pole provision for secondary main 70 A max. Type BR, BRH, BRHH.
⑧ Please use RH-Type hubs on top end wall for overhead feed.

Note: See knockout drawings on **Pages V1-T4-68 through V1-T4-74** for hub information.

Combination Service Entrance Devices—EUSERC, continued

Ampere Rating	By-pass	Service	kAIC	Jaws	Distribution	Main	Branch Breaker Type	Dimensions and Enclosure Shape ①	Page Numbers Wiring	Page Numbers Knockout ①	Catalog Number—Surface	Catalog Number—Flush
Ring Style All-in-Ones (includes distribution section), continued												
150	None	OH/UG	22	4	20/40	CSR2150	BR	—	**V1-T4-55**	—	**MBE2040B150BTS** ③	—
150	None	OH/UG	10	4	4/8	CSR2150	BR	3	**V1-T4-56**	**V1-T4-70**	**MBE48B150BTS**	—
200	None	OH/UG	10	4	4/8	CSR2200	BR	3	**V1-T4-56**	**V1-T4-70**	**MBE48B200BTS** ④	**MBE48B200BTF** ④
200	None	OH/UG	22	4	8	CSR2200N	CH	3	**V1-T4-53**	**V1-T4-70**	**CMBE88B200BTS** ④⑤	**CMBE88B200BTF** ④⑤
200	None	OH/UG	10	4	8	CSR2200	BR	3	**V1-T4-56**	**V1-T4-70**	**MBE88B200BTS**	—
200	None	OH/UG	10	4	4/8	CSR2200	BR	19	**V1-T4-58**	**V1-T4-73**	**MBER48B200BTS** ④⑥	—
200	None	OH/UG	10	4	4/8	CSR2200	BR	19	**V1-T4-58**	**V1-T4-73**	**MBER48B200BTS** ④⑥	—
200	None	OH/UG	②	4	8/16	Provision	BR	10	**V1-T4-57**	**V1-T4-71**	**MBE816P200TSCU** ③⑤	—
200	None	OH	②	4	8/16	Provision	BR	10	**V1-T4-57**	**V1-T4-71**	**MBE816P200TS** ③④	—
200	None	UG	②	4	6–2 Pole	Main Lug	CH	5	**V1-T4-52**	**V1-T4-69**	**CMBE1212L200BS** ⑤⑦	**MBE1212L200BTF** ⑦
200	None	OH/UG	②	4	6–2 Pole	Main Lug	BR	9	**V1-T4-57**	**V1-T4-69**	**MBE1212L200BTS**	—
200	None	OH	10	4	20/40	CSR2200	BR	10	**V1-T4-57**	**V1-T4-71**	**MBE2040B200TS** ③	**MBE2040B200TF** ⑧
200	None	UG	10	4	20/40	CSR2200	BR	6	**V1-T4-54**	**V1-T4-69**	**MBE2040B200BS** ③	**MBE2040B200BF** ⑧
200	None	OH/UG	22	4	20/40	CSR2200	BR	—	**V1-T4-55**	—	**MBE2040BH200BTS** ③	—
200	None	OH/UG	22	4	20/40	CSR2200	BR	—	**V1-T4-55**	—	**MBE2040BH200BTF** ③	—
200	None	UG	22	4	30/42	CSR2200	BR	7	**V1-T4-54**	—	—	**MBE3042B200BF**
200	None	UG	22	4	32/42	CSR2200N	CH	7	**V1-T4-52**	**V1-T4-69**	**CMBE3242B200BS** ⑤⑦	**CMBE3242B200BF** ⑤⑦
200	None	UG	22	4	40	CSR2200	BR	12	**V1-T4-58**	—	**MBE4040B200BSH** ③⑦	—
200	None	OH/UG	22	4	40	CSR2200	BR	12	**V1-T4-58**	—	**MBE4040B200BTS**	**MBE4040B200BTF** ⑨
200	None	OH/UG	22	4	42	CSR2200N	CH	12	**V1-T4-57**	—	**CMBE4242B200BTS** ⑤	—
200	None	OH/UG	10	4	20/40	CSR2200	BR	18	**V1-T4-55**	**V1-T4-73**	**MBE2040B200BTS** ③	**MBE2040B200BTF** ③
225	None	OH/UG	10	4	20/40	CSR2225	BR	18	**V1-T4-58**	**V1-T4-73**	**MBE2040B225BTS** ③	**MBE2040B225BTF** ③
225	None	UG	22	4	30/42	CSR2225	BR	7	**V1-T4-55**	—	—	**MBE3042B225BF** ⑦
225	None	UG	22	4	32/42	CSR2225N	CH	7	**V1-T4-52**	**V1-T4-69**	**CMBE3242B225BS** ⑤⑦	**CMBE3242B225BF** ⑤⑦

Notes

① See **Page V1-T4-68** for box details.
② Interrupting rating is dependent on the main breaker that is installed.
③ Please use RH-Type hubs on top end wall for overhead feed.
④ Units come with feed-through lugs.
⑤ Unit has copper bus.
⑥ Semi-flush flange, not full stucco flange.
⑦ Reference drawing EUSERC DWG-301/301A.
⑧ When a provision for main is provided, order one of the main breakers listed on **Page V1-T4-68**. All panels are dual labeled to accept Types BW or CSR Main Breakers.
⑨ Includes factory-mounted 2.50-inch hub on bottom endwall. UG feed only.

Wiring Diagrams

Catalog Numbers—CMBE3242B150BS, CMBE3242B200BS, CMBE3242B200BF, CMBE3242B225BS and CMBE3242B225BF

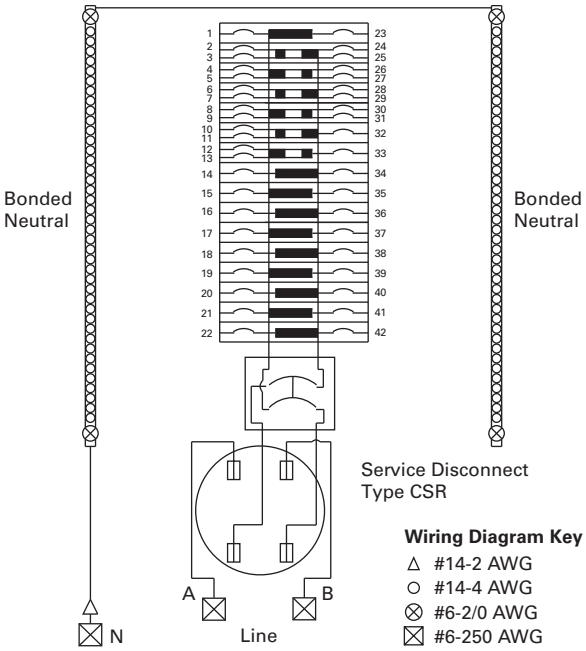

Catalog Number—CMBE1212L200BS

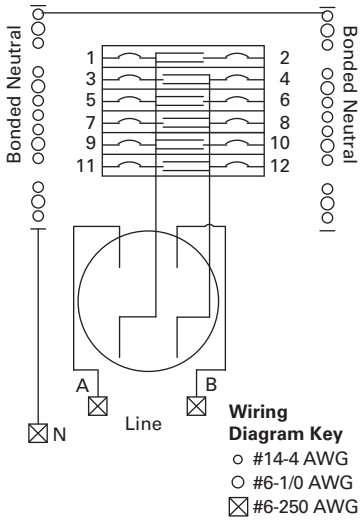

Catalog Numbers—CMBE2222P125BF and CMBE2222P125BS

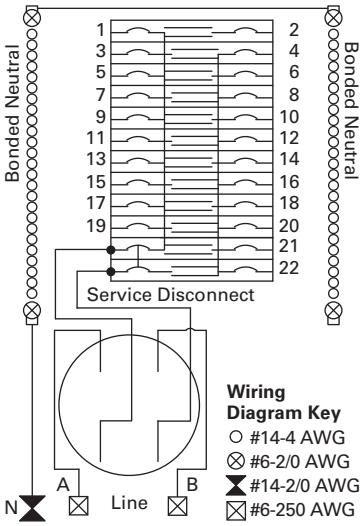

Catalog Numbers—CMBEB150BTS and CMBEB200BTS

Install 200 Ampere Maximum Service Disconnect Type CSR ②

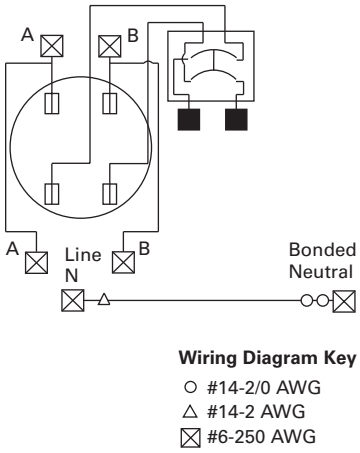

Note

① Factory-installed **MCBK225** kit for C/B load lugs.

Catalog Number—CMBE24L125BTS

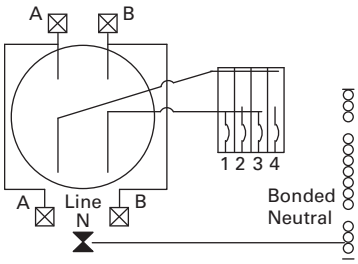

Wiring Diagram Key
- ○ #14-1/0 AWG
- ○ #14-6 AWG
- ⧗ #14-1/0 AWG
- ☒ #6-250 AWG

Catalog Numbers—CMBE88B200BTS, CMBE88B200BTF, CMBE88B150BTS and CMBE88B150BTF

Service Disconnect
Type CSR 200 Ampere Maximum

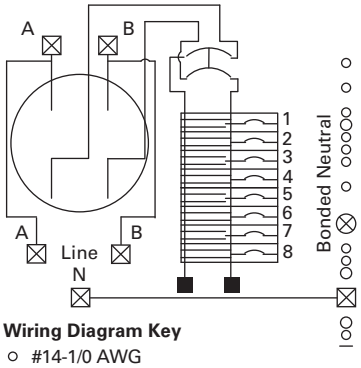

Wiring Diagram Key
- ○ #14-1/0 AWG
- ○ #14-6 AWG
- ⊗ #6-2/0 AWG
- ☒ #6-250 AWG
- ■ #4-300 AWG

Catalog Number—CMBE24L200BTS

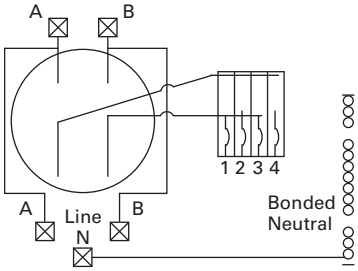

Wiring Diagram Key
- ○ #14-6 AWG
- ○ #14-1/0 AWG
- ☒ #6-250 AWG

Catalog Numbers—MBE1224B100BTS, MBE1224B100BTF, MBE1224B125BTS and MBE1224B125BTF

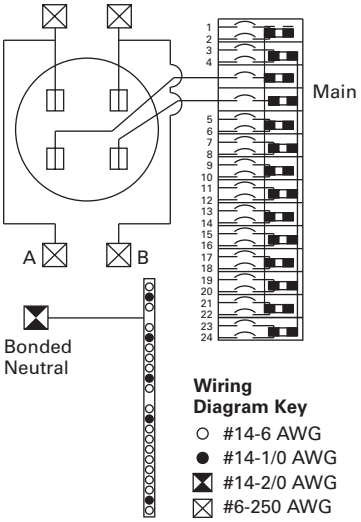

Wiring Diagram Key
- ○ #14-6 AWG
- ● #14-1/0 AWG
- ⧗ #14-2/0 AWG
- ☒ #6-250 AWG

Catalog Numbers—MBE2040B150BF, MBE2040B200BS and MBE2040B200BF

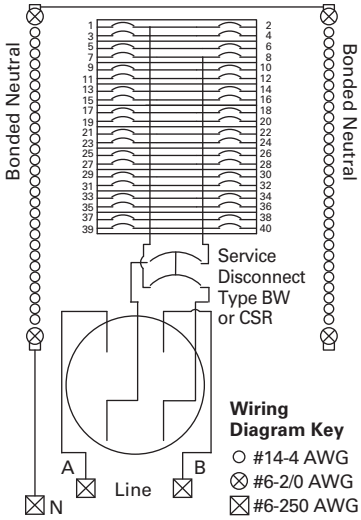

Catalog Numbers—MBE1212L200BF and MBE1212L200BS

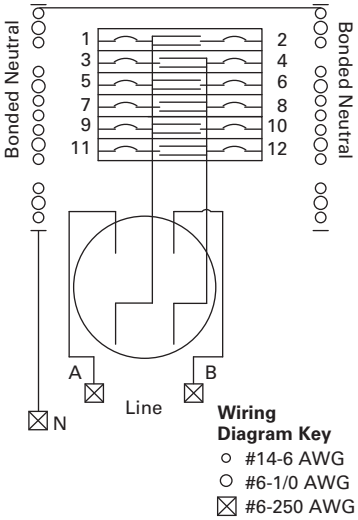

Catalog Number—MBE1836B125BF

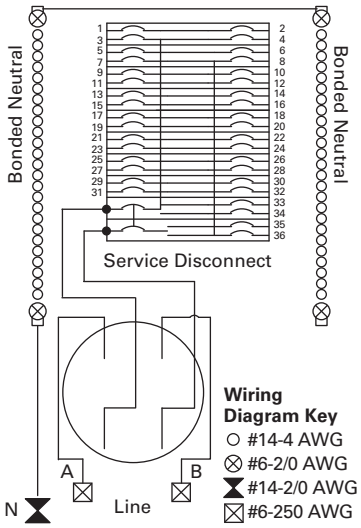

Catalog Number—MBE3042B200BF

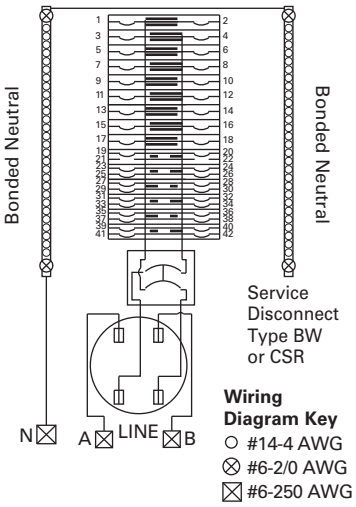

Catalog Numbers—MBE1428B100BS and MBE1428B100BF

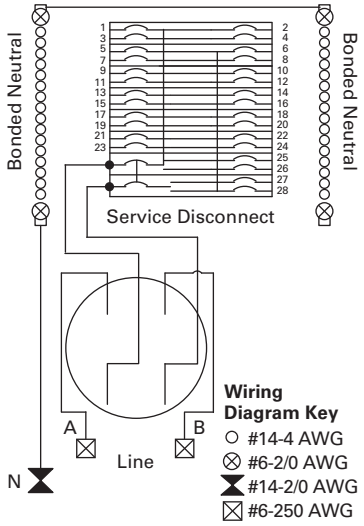

Catalog Number—MBE3042B225BF

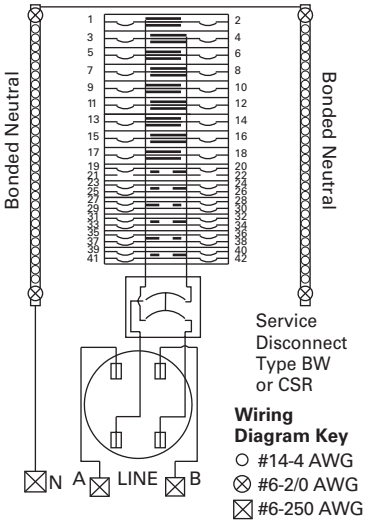

Catalog Numbers—MBE2040B200BTS, MBE2040B150BTS, MBE2040BH200BTS and MBE2040BH200BTF

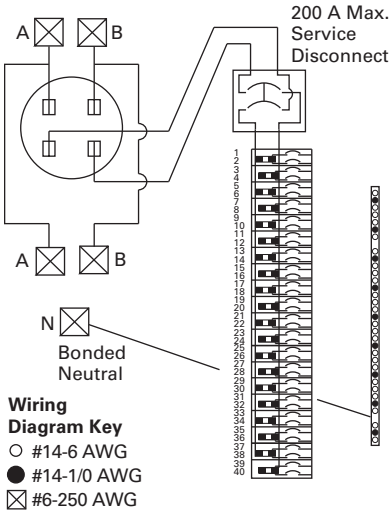

Catalog Numbers—MBE24L125BTS and MBE24L125BTF

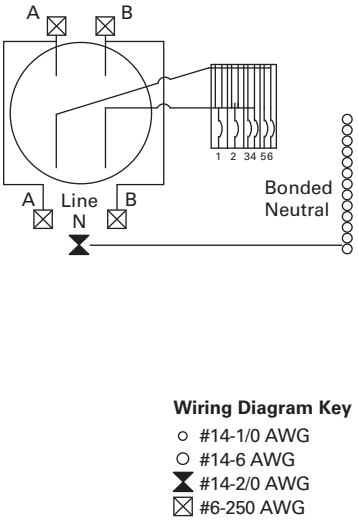

Catalog Numbers—MBE48B150BTS, MBE48B200BTS, MBE48B200BTF

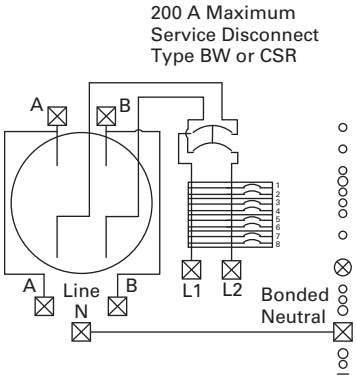

Wiring Diagram Key
- ○ #14-1/0 AWG
- ○ #14-6 AWG
- ⊗ #6-2/0 AWG
- ⊠ #6-250 AWG

Catalog Numbers—MBE24L200BTS and MBE24L200BTF

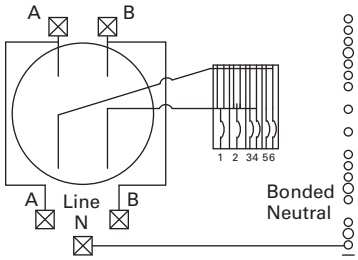

Wiring Diagram Key
- ○ #14-1/0 AWG
- ○ #14-6 AWG
- ⧗ #14-2/0 AWG
- ⊠ #6-250 AWG

Catalog Numbers—MBEB200BTS and MBEB200BTF

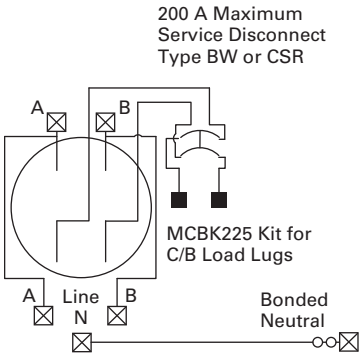

Wiring Diagram Key
- ○ #14-2/0 AWG
- ⊗ #6-2/0 AWG
- ⊠ #6-250 AWG

Catalog Number—MBE88B200BTS

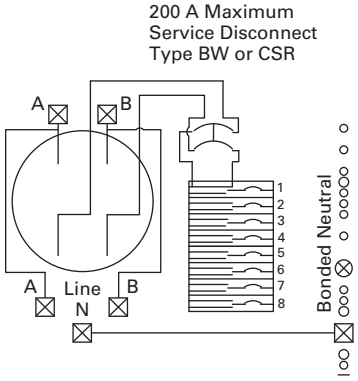

Wiring Diagram Key
- ○ #14-1/0 AWG
- ○ #14-6 AWG
- ⊗ #6-2/0 AWG
- ⊠ #6-250 AWG

Catalog Numbers—MBE816P200TS and MBE816P200TSCU

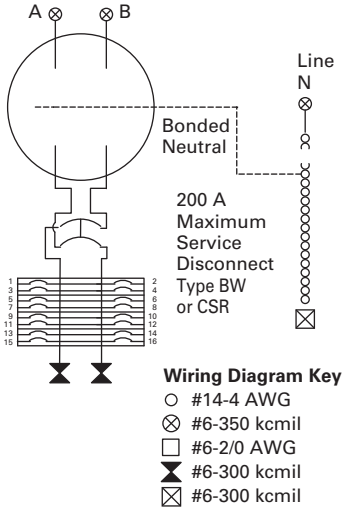

Catalog Number—MBE1212L200BTS

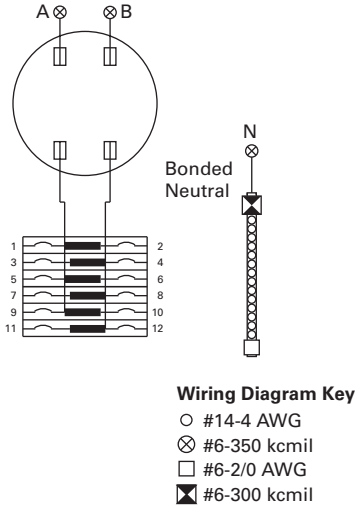

Catalog Numbers— MBE2040B200TS and MBE2040B200TF

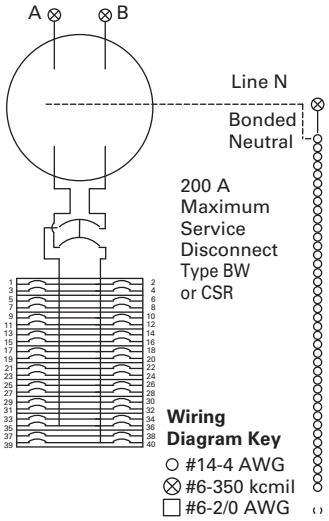

Catalog Number—CMBE1212L200TS

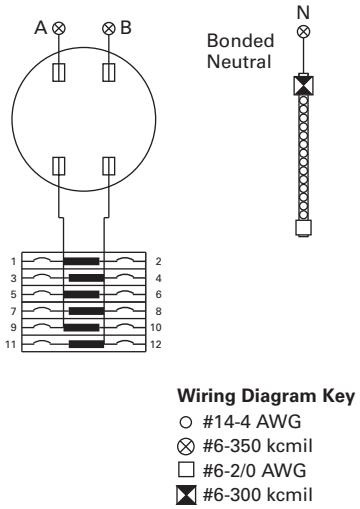

Catalog Number—MBE1212L200BTS

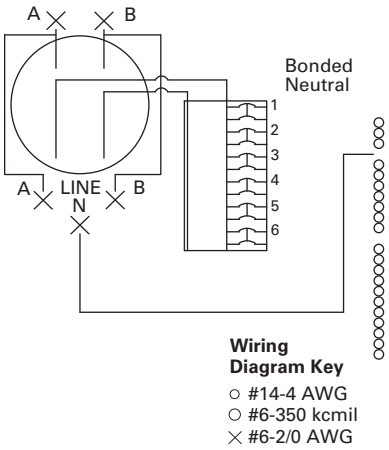

Catalog Number—CMBE4242B200BTS

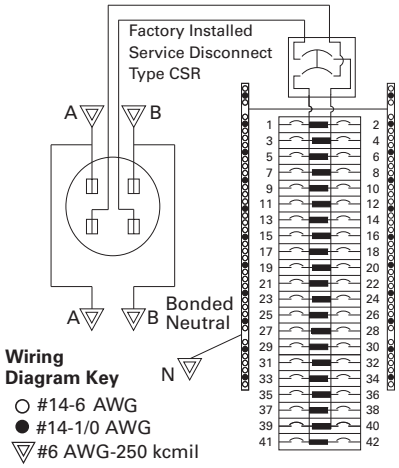

Catalog Numbers—CMBER88B200BTS and CMBER88B200BTF

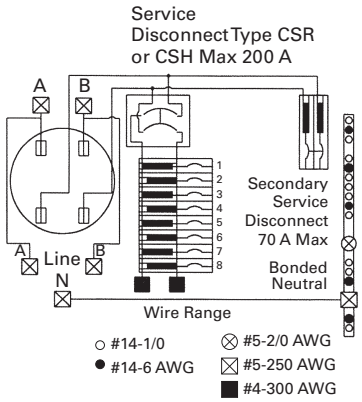

Catalog Numbers—MBE2040B225BTS, MBE2040B225BTF

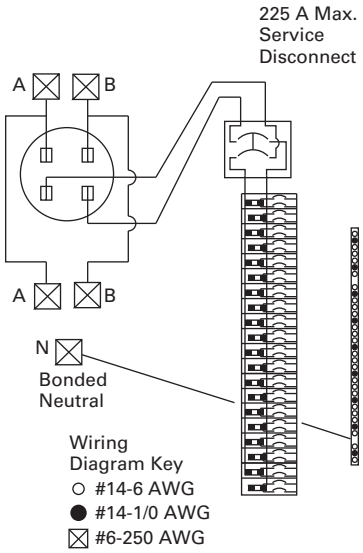

Catalog Numbers—MBE4040B200BTS and MBE4040B200BSH

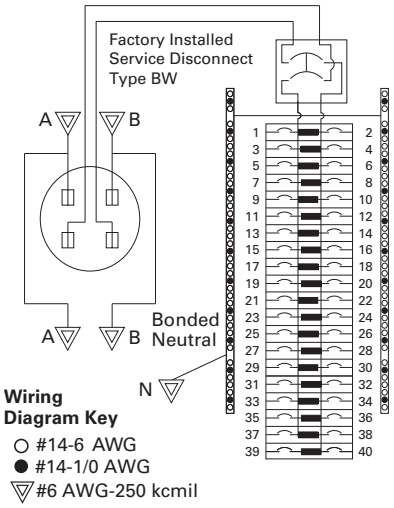

Catalog Numbers—MBE1224B125TS and MBE1224B100TS

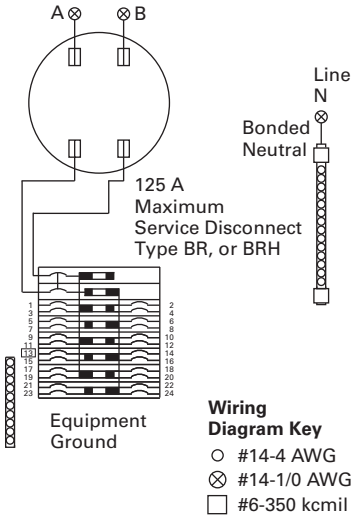

Catalog Numbers—MBER48B200BTS and MER48B200BTF

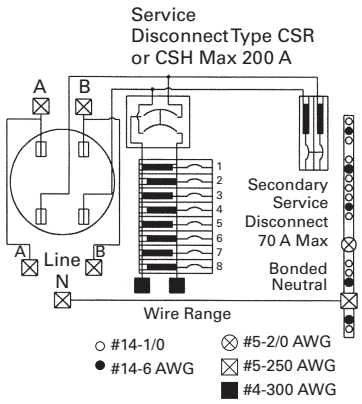

West Coast All-In-One Design

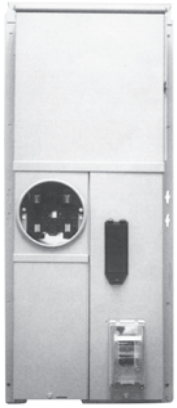

Contents

Description	*Page*
Residential Meter Breakers	**V1-T4-37**
Non-EUSERC Combination Service Entrance Devices 100–200 A Styles	**V1-T4-39**
Meets EUSERC Requirements Service Entrance Devices 100–225 A.	**V1-T4-48**
West Coast All-In-One Design	
Mechanical Interlock Cover	**V1-T4-65**
House Panels	**V1-T4-75**
Commercial Safety Sockets	**V1-T4-83**
CH Style Renovation Solutions	**V1-T4-86**
Aluminum Meter Breakers	**V1-T4-87**

West Coast All-In-One Design

Product Description

A metering device that may contain a meter socket, main breaker and distribution section within the same enclosure.

Features, Benefits and Functions

- Semi-flush mounting. 7-inch design ideal for stucco homes
- Endwall knockouts are easily accessible for future wiring without damaging stucco
- Knockout in back of case for mounting car-charging receptacle in garage (meets future electric car requirements)
- Outboard split neutral for easy wiring
- Commercial grade main breaker
- Value-added kits available: Hub adapter plate

Product Selection

MBED3042B200BF

7-Inch Deep Meter Breaker—Standard Design OH/NG ①

Ampere Rating	Bypass	Service	kAIC	Jaws	Distribution	Main	Branch Breaker Type	Catalog Number—Flush	Factory-Installed Kits
100	None	UG	10	4	18/36	BW2100	BR	**MBED1836B100BF**	—
125	None	UG	10	4	18/36	BW2125	BR	**MBED1836B125BF**	—
200	None	UG	10	4	20/40	BW2200	BR	**MBED2040B200BF**	—
200 ②	None	UG	10	4	20/40	BW2200	BR	**MBED2040B200BFN**	—
200	None	UG	10	4	30/42	BW2200	BR	**MBED3042B200BF**	—
225	None	UG	10	4	20/40	BW2225	BR	**MBED2040B225BF**	—
225 ②	None	UG	10	4	20/40	BW2225	BR	**MBED2040B225BFN**	—
225	None	UG	10	4	30/42	BW2225	BR	**MBED3042B225BF**	—

Accessories

Hub Adapter Plate

Description	Catalog Number
Hub adapter plate	**MBEDADPT**

Notes

① Reference drawing EUSERC DWG-301A, G1

② Main Breaker Bus connected to 20/40 distribution. Main and Disconnect in same compartment.

Wiring Diagrams

Typical Wiring Diagram for Catalog Numbers MBED3042B200BF, MBED3042B225BF, MBED3042BH200BF

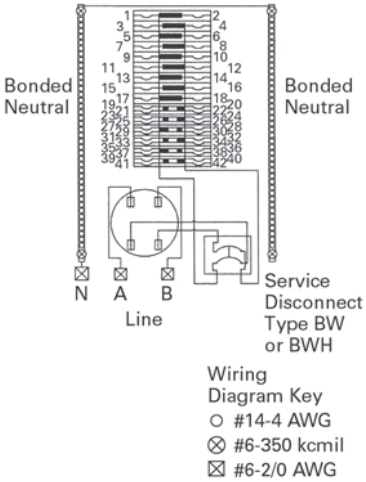

Typical Wiring Diagram for Catalog Numbers MBED2040B200BFN, MBED2040B225BFN

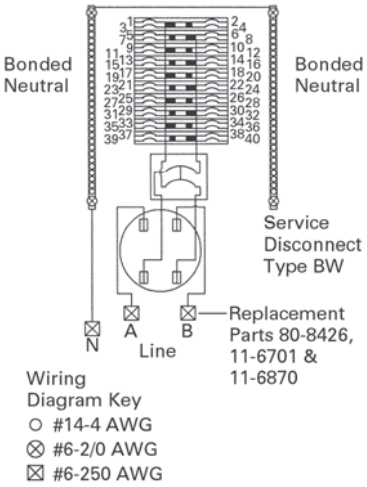

Typical Wiring Diagram for Catalog Numbers MBED1836B100BF, MBED1836B125BF

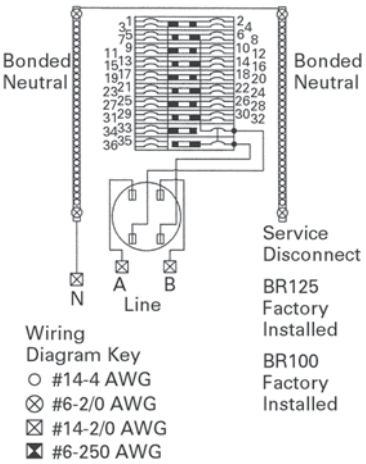

Typical Wiring Diagram for Catalog Numbers MBED2040B200BF, MBED2040B225BF, MBED2040BH200BF, MBED2040BH225BF

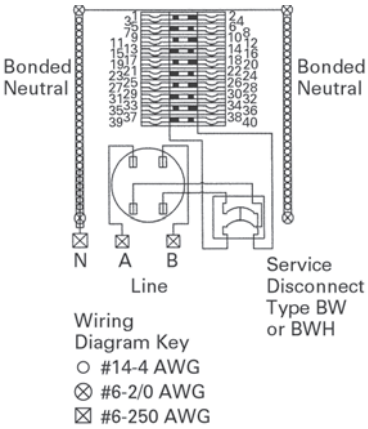

Typical Wiring Diagram for Catalog Numbers MBEB2003040BB and MBEB2253040BB

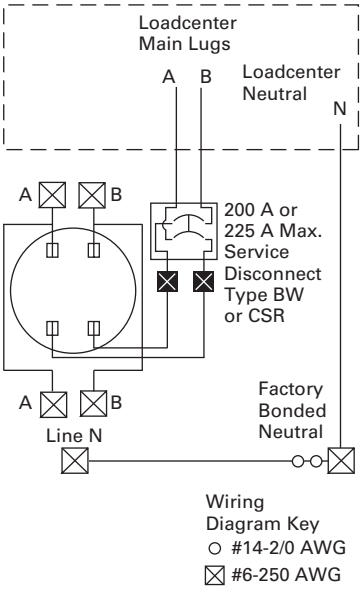

Dimensions and Knockouts

Approximate Dimensions in Inches (mm)

7-Inch Deep Meter Breaker

Catalog Number—Flush	Height	Width	Depth
MBED1836B100BF	38.00 (965.2)	14.19 (360.4)	7.00 (177.8)
MBED1836B125BF	38.00 (965.2)	14.19 (360.4)	7.00 (177.8)
MBED2040B200BF	38.00 (965.2)	14.19 (360.4)	7.00 (177.8)
MBED2040B200BFN	42.50 (1079.5)	14.19 (360.4)	7.00 (177.8)
MBED3042B200BF	42.50 (1079.5)	14.19 (360.4)	7.00 (177.8)
MBED2040B225BF	38.00 (965.2)	14.19 (360.4)	7.00 (177.8)
MBED2040B225BFN	42.50 (1079.5)	14.19 (360.4)	7.00 (177.8)
MBED3042B225BF	42.50 (1079.5)	14.19 (360.4)	7.00 (177.8)

Approximate Dimensions in Inches (mm)

Catalog Numbers MBED2040B200BFN, MBED20408225BFN, MBED3042B200BF, MBED3042B225BF, MBED2040B200BF, MBED2040B225BF, MBED1836B100BF, MBED1836B125BF

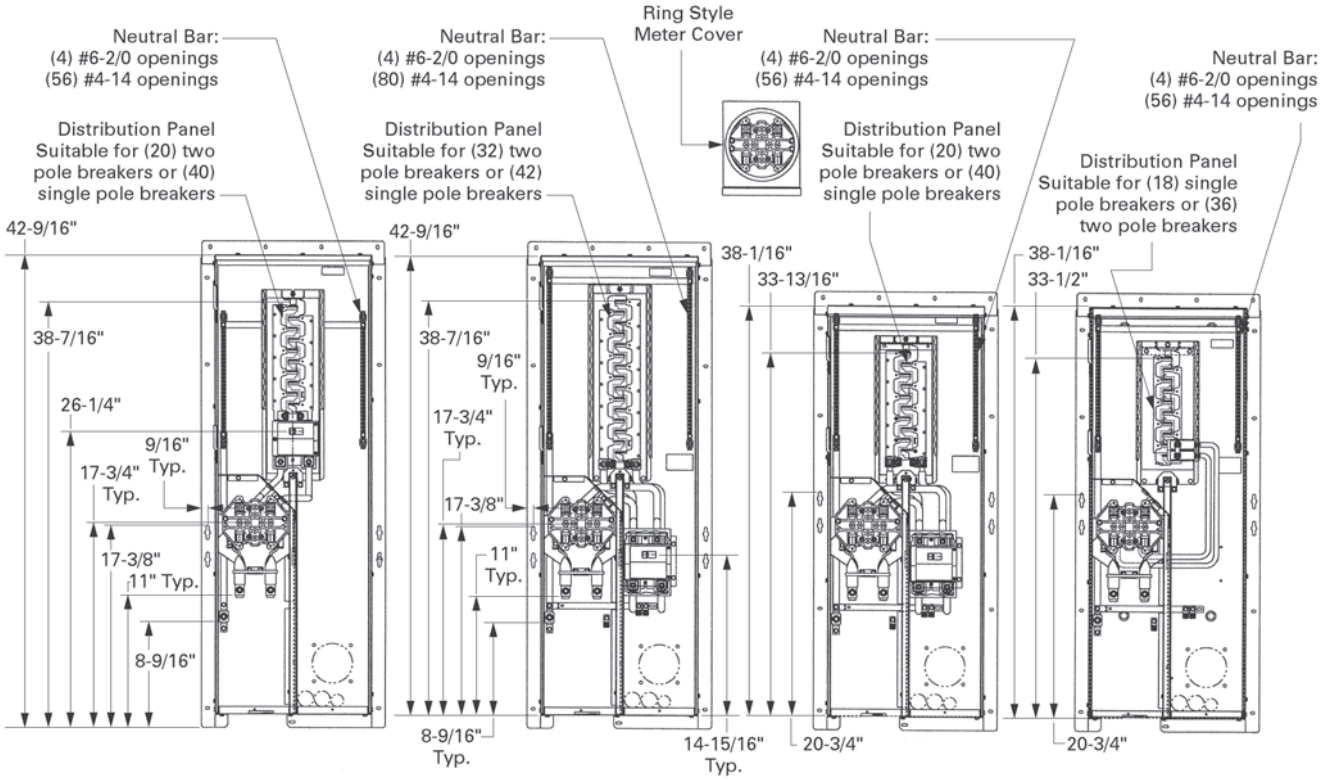

Knockout Configurations and Dimensions for MBED2040B200BFN, MBED20408225BFN, MBED3042B200BF, MBED3042B225BF, MBED2040B200BF, MBED2040B225BF, MBED1836B100BF, MBED1836B125BF

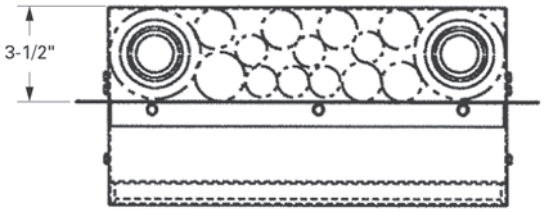

Top Endwall

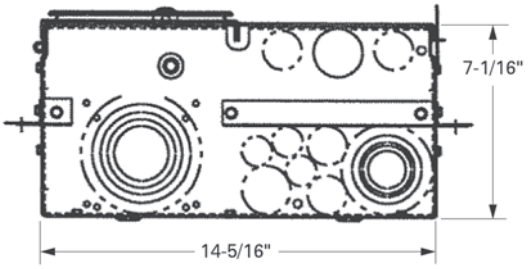

Bottom Endwall

Approximate Dimensions in Inches (mm)

Catalog Numbers MBEB2003040BB, MBEB2253040BB

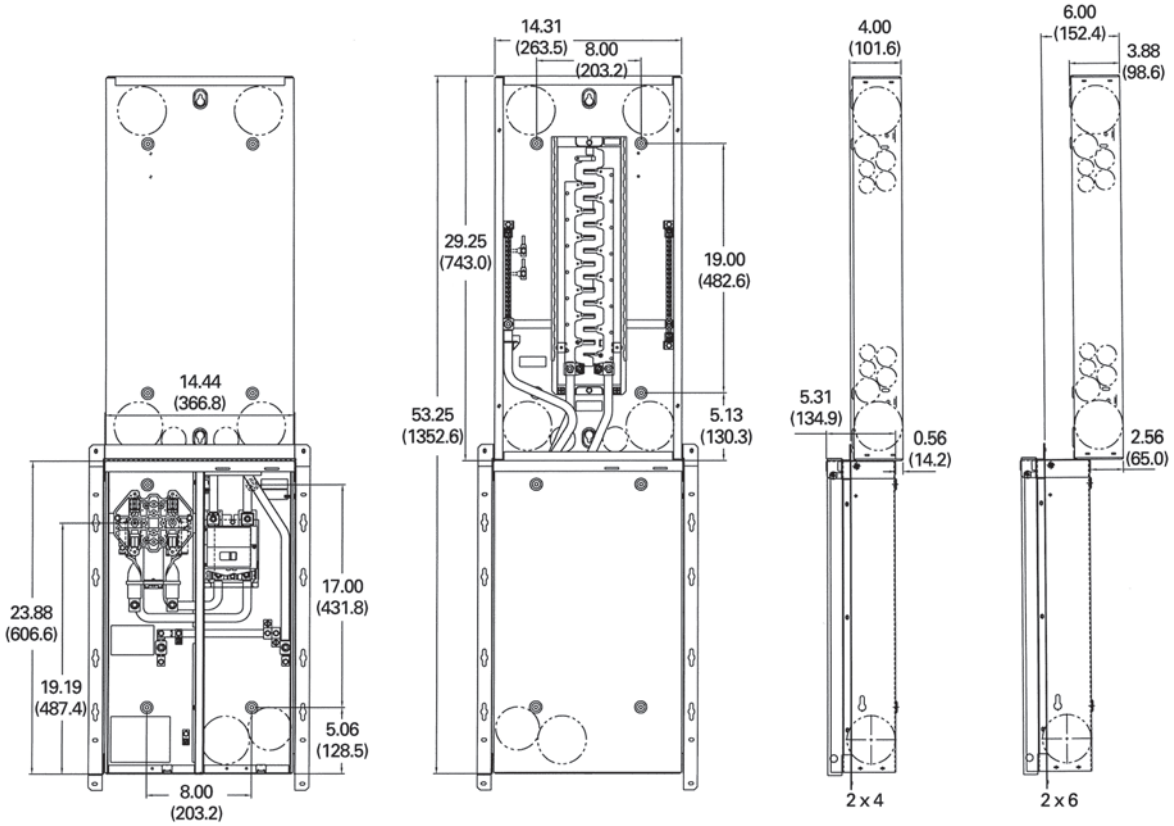

Knockout Configurations for MBEB2003040BB, MBEB2253040BB

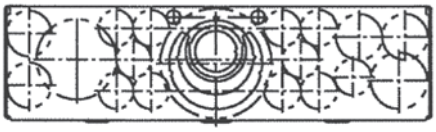

Top Endwall

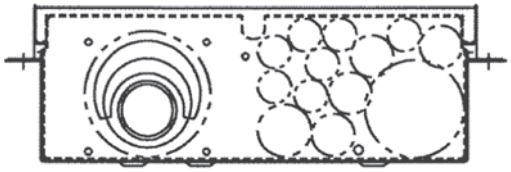

Bottom Endwall

Mechanical Interlock Cover

Meter Breaker with Interlock Cover

Contents

Description	*Page*
Residential Meter Breakers	**V1-T4-37**
Non-EUSERC Combination Service Entrance Devices 100–200 A Styles	**V1-T4-39**
Meets EUSERC Requirements Service Entrance Devices 100–225 A.	**V1-T4-48**
West Coast All-In-One Design	**V1-T4-59**
Mechanical Interlock Cover	
House Panels	**V1-T4-75**
Commercial Safety Sockets	**V1-T4-83**
CH Style Renovation Solutions	**V1-T4-86**
Aluminum Meter Breakers	**V1-T4-87**

Mechanical Interlock Cover

Product Description

Covers mechanically interlock two breakers. Covers interlock main breaker with two-pole breaker mounted in the distribution section of the meter breakers.

Product Selection

Meter Breaker with Interlock Cover

Mechanical Interlock Cover

Mechanical Interlock Deadfront	Meter Breaker Catalog Number
MBDF1M	**CMB1212B200BTS**
	CMB1212B200BTSD
	CMB1212P200BTS
	CMB1212P200BTSD
MBDF2M	**MB816B200BTS**
	MB816B200BTSCU
	MB816P200BTS
	MB816P200BTSCU
	MB816P200STD
MBDF3M	**MB2040B200BTS**
	MB2040P200BTS
	MB2040P200SD
MBDF4M	**MBE816P200TS**
	MBE816P200TSCU
MBDF5M	**MBE2040B150BF**
	MBE2040B150BS
	MBE2040B200BF
	MBE2040B200BS
MBDF6M	**MBE2040B200TF**
	MBE2040B200TS
	MBE2040P200TF
	MBE2040P200TS
MBDF7M	**CMBE3242B150BF**
	CMBE3242B150BS
	CMBE3242B200BF
	CMBE3242B200BS
	CMB3242B150BS
	CMB3242B200BS
MBDF8M	**CMBE4242B200BSH**
	CMBE4242B200BTF
	CMBE4242B200BTS
MBDF9M	**MBE4040B200BSH**
	MBE4040B200BSHH
	MBE4040B200BTF
	MBE4040B200BTS

Mechanical Interlock Deadfront	Meter Breaker Catalog Number
MBDF1AM	**CMB2424M200BTS**
MBDF10M	**CMB24B200TFR**
	CMB24B200TSR
MBDF11M	**CMBXB200BTS**
	CMBXP200BTS
MBDF12M	**CMBX3242B200BTS**
	CMBX3242P200BTS
MBDF13M	**MBE3042B200BF**
	MBE3042B225BF
MBDF14M	**CMBE88B150BTF**
	CMBE88B150BTS
	CMBE88B200BTF
	CMBE88B200BTS
	CMB88B150BTS
	CMB88B200BTS
MBDF15M	**MBE48B150BTF**
	MBE48B150BTS
	MBE48B200BTF
	MBE48B200BTS
MBDF16M	**MBE88B150BTF**
	MBE88B150BTS
	MBE88B200BTF
	MBE88B200BTS
MBDF17M	**MBE2040BC200BTS**
	MBE2040BH200BTF
	MBE2040BH200BTS
	MBE2040B150BTF
	MBE2040B150BTS
	MBE2040B200BTF
	MBE2040B200BTS
	MBE2040B200BTSV
	MBE2040B225BTF
	MBE2040B225BTS

Technical Data and Specifications

Meter Breaker Parts ①

Description	Catalog Number
5th Jaw Kits	
Compact and standard styles (MB and CMB)	**MB5JAWKIT**
EUSERC style	**IMM5JKOP** ②
Horn Bypass Kits	
Ringless Style units only (MB and CMB)	**MBHBPKIT**

Hub Selection Chart

Hub Size Dimensions in Inches (mm)	Catalog Number
1.00 (25.4)	**DS100H2**
1.25 (31.8)	**DS125H2**
1.50 (38.1)	**DS150H2**
2.00 (50.8)	**DS200H2**
2.50 (63.5)	**DS250H2**
3.00 (76.2)	**DS300H2**

Top Endwall (Surface)

Hub Provision Catalog Number	
DS100H2	
DS125H2	
DS150H2	
DS200H2	
DS250H2	
DS300H2	
DS900AP	(Adapter Plate if using DS___H1 hubs only) ③

Wire Size Chart

Main	Wire Size Range Cu/Al 60 °C or 75 °C for Line Terminals
BR250	#14–4 kcmil
BR260	#4–1/0 kcmil
BR270	#4–1/0 kcmil
BR280	#4–1/0 kcmil
BR290	#4–1/0 kcmil
BR2100	#4–1/0 kcmil
BW2125	#2–300 kcmil
BW2150	#2–300 kcmil
BW2200	#2–300 kcmil
CSR2125	#2–300 kcmil
CSR2150	#2–300 kcmil
CSR2200	#2–300 kcmil
CSR2125N	#1/0–250 kcmil
CSR2150N	#1/0–250 kcmil
CSR2200N	#1/0–250 kcmil
125 A main lugs	—
200 A main lugs	—
MCBK225	#2–300 kcmil

Wire Size is Determined by the Circuit Breaker Installed in the Enclosure

Wire/Application	Maximum Wire Size	Ampere Rating
Aluminum—Standard	250 kcmil	200
Aluminum—Service Entrance	250 kcmil	225
Copper—Standard and Service Entrance	250 kcmil	225

Notes

① For breakers under 70 A used in backfed applications, add "B" to the end of the catalog string to get the appropriate "hold-down" version.

② Reference drawing EUSERC DWG-G1.

③ Use when DS H1 Type 1, 1.25 and 1.50-inch hubs are needed.

Use DS...H2 hubs for bottom endwalls (for all units). Use RH hubs for top endwalls on semi-flush units. Use DS...H2 hubs for top endwalls on surface devices.

Dimensions and Knockouts

Approximate Dimensions in Inches (mm)

Box Styles—Five Different Styles (Shapes) of Product

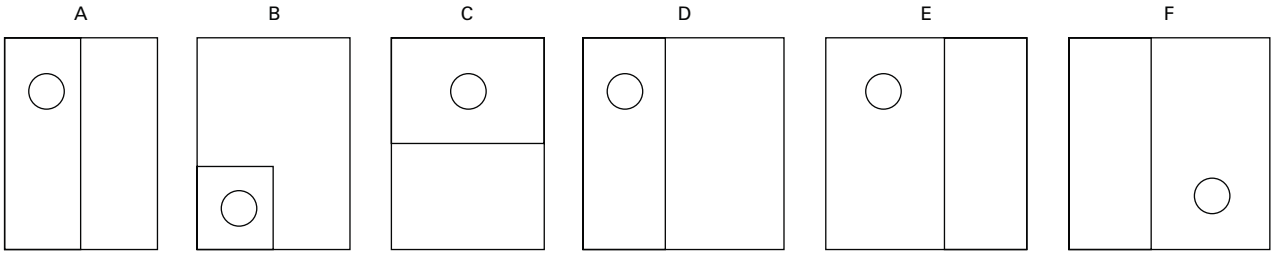

Box Dimensions

Box Number	Height	Width	Depth	Box Style
1	12.50 (317.5)	14.44 (366.7)	4.00 (101.6)	A
2	23.88 (606.4)	14.44 (366.7)	5.38 (136.5)	A
3	28.38 (720.7)	14.44 (366.7)	5.38 (136.5)	A
4	34.13 (866.8)	14.44 (366.7)	5.38 (136.5)	B
5	36.13 (917.6)	14.44 (366.7)	5.38 (136.5)	B
6	43.38 (1101.7)	14.44 (366.7)	5.38 (136.5)	B
7	46.88 (1190.6)	14.44 (366.7)	5.38 (136.5)	B
8	19.75 (501.7)	7.50 (190.5)	4.00 (101.6)	C
9	25.00 (635.0)	14.44 (366.7)	5.38 (136.5)	C
10	32.38 (822.3)	14.44 (366.7)	5.38 (136.5)	C
11	36.63 (930.3)	14.44 (366.7)	5.38 (136.5)	C
12	34.38 (873.1)	22.00 (558.8)	5.38 (136.5)	D
13	19.75 (501.7)	14.44 (366.7)	5.38 (136.5)	E
14	39.91 (1013.7)	14.44 (366.7)	5.38 (136.5)	C
15	23.88 (606.6)	13.00 (330.2)	4.94 (125.5)	F
16	28.38 (720.9)	13.00 (330.2)	4.94 (125.5)	F
17	34.19 (868.4)	22.13 (562.1)	5.00 (127.0)	D
18	36.06 (915.9)	16.63 (422.4)	5.50 (139.7)	A
19	28.38 (720.9)	14.44 (366.8)	4.94 (125.5)	A
20	32.06 (814.3)	14.44 (366.8)	4.94 (125.5)	C
21	25.50 (647.7)	14.44 (366.8)	4.94 (125.5)	C

Approximate Dimensions in Inches (mm)

Knockouts for Stucco and Surface Units Catalog Numbers—CMBE3242B200BF, CMBE3242B225BF, MBE2040B200BF, MBE2040B150BF, MBE1428B100BF, MBE1212L200BTF, MBE1836B125BF and MBE1212L200BTS

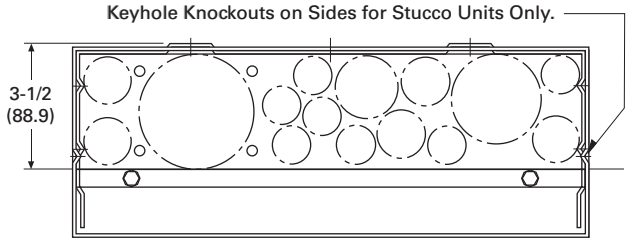

Top Stucco

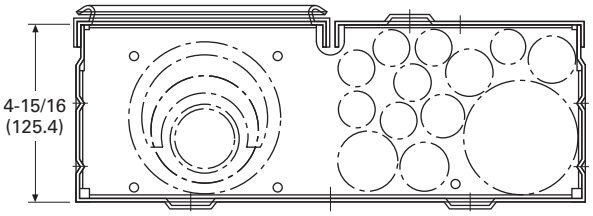

Bottom

Knockouts for Stucco and Surface Units Catalog Numbers—CMBE3242B150BS, CMBE3242B200BS, CMBE3242B225BS, CMBE1212L200BS, MBE2040B200BS, MBE1428B100BS, MBE1212L200BTS, CMB3242B150BS and CMB3242B200BS

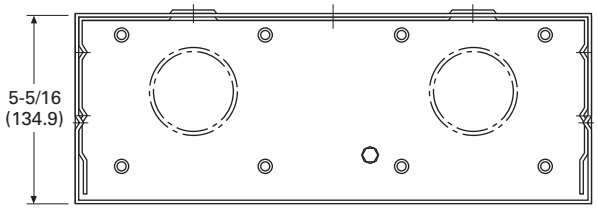

Top Surface

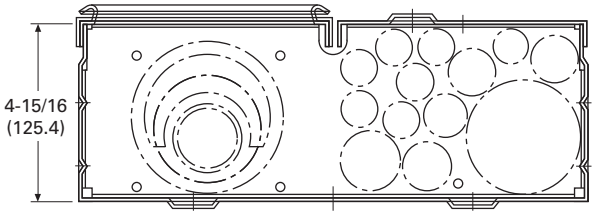

Bottom

Top Endwall (Surface)

Hub Provision Catalog Number	Quantity
DS100H2	①
DS125H2	①
DS150H2	①
DS200H2	①
DS250H2	①
DS300H2	①
DS900AP (Adapter Plate if using DS___H1 hubs only) ②	①

Top Endwall (Stucco) ③

Knockout Size Dimensions in Inches (mm)	Quantity
1.25, 1.50, 2.00, 2.50 (31.8, 38.1, 50.8, 63.5)	1
1.00, 1.25, 1.50 (25.4, 31.8, 38.1)	1
0.50, 0.75, 1.00 (12.7, 19.1, 25.4)	1
0.50, 0.75 (12.7, 19.1)	3
0.50 (12.7)	3

Bottom Endwall

Knockout Size Dimensions in Inches (mm)	Quantity
0.50 (12.7)	7
0.50, 0.75 (12.7, 19.1)	4
0.50, 0.75, 1.00 (12.7, 19.1, 25.4)	1
1.00, 1.25, 1.50, 2.00 (25.4, 31.8, 38.1, 50.8)	1
1.25, 1.50, 2.00, 2.50, 3.00 (31.8, 38.1, 50.8, 63.5, 76.2)	1

Notes

① For details regarding quantities, please contact the Technical Resource Center (TRC) at 1-877-ETN-CARE.

② Use when DS H1 Type 1, 1.25 and 1.50-inch hubs are needed.

③ RH hubs are to be used for Top Endwall (Stucco) endwalls.

Approximate Dimensions in Inches (mm)

Knockouts for Stucco and Surface Units Catalog Numbers—CMBE88B150BTF, CMBE88B200BTF, MBE24L125BTF, MBE24L200BTF, MBE48B200BTF, MBEB200BTF, MBE1224B100BTF and MBE1224B125BTF

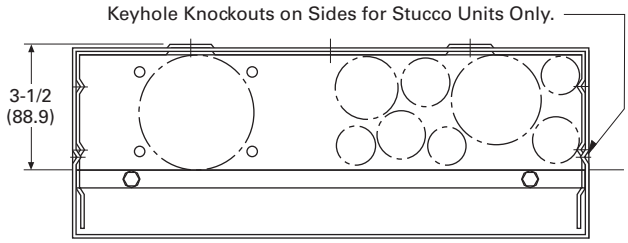

Top Stucco

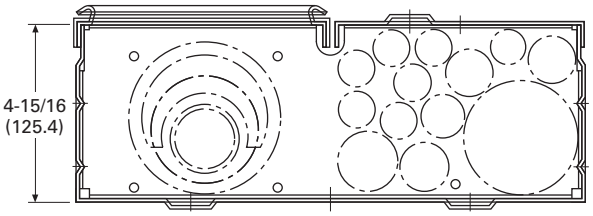

Bottom

Knockouts for Stucco and Surface Units Catalog Numbers—CMBB150BTS, CMBB200BTS, CMBP200BTS, CMBE24L125BTS, CMB24L125BTS, CMBE24L200BTS, CMBEB200BTS, CMBEB150BTS, CMBE88B150BTS, CMBP200BTS, CMBE88B200BTS, MBE24L125BTS, MBE24L200BTS, MBE48B150BTS, MBE48B200BTS, MBE88B200BTS, MBEB200BTS, MBE1224B100BTS, MBE1224B125BTS, CMB88B150BTS, CMB88B200BTS and MB48B200BTS

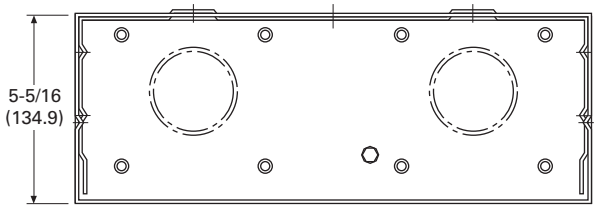

Top Surface

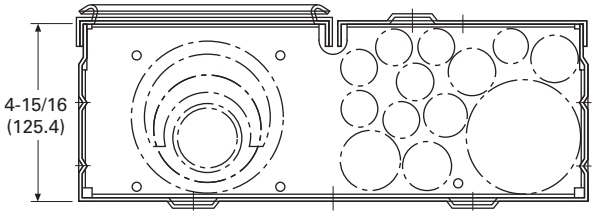

Bottom

Top Endwall (Surface)

Hub Provision Catalog Number	Quantity
DS100H2	①
DS125H2	①
DS150H2	①
DS200H2	①
DS250H2	①
DS300H2	①
DS900AP (Adapter Plate if using DS___H1 hubs only) ②	①

Top Endwall (Stucco) ③

Knockout Size Dimensions in Inches (mm)	Quantity
1.25, 1.50, 2.00, 2.50 (31.8, 38.1, 50.8, 63.5)	1
1.00, 1.25, 1.50 (25.4, 31.8, 38.1)	1
0.50, 0.75, 1.00 (12.7, 19.1, 25.4)	1
0.50, 0.75 (12.7, 19.1)	3
0.50 (12.7)	3

Bottom Endwall

Knockout Size Dimensions in Inches (mm)	Quantity
0.50 (12.7)	7
0.50, 0.75 (12.7, 19.1)	4
0.50, 0.75, 1.00 (12.7, 19.1, 25.4)	1
1.00, 1.25, 1.50, 2.00 (25.4, 31.8, 38.1, 50.8)	1
1.25, 1.50, 2.00, 2.50, 3.00 (31.8, 38.1, 50.8, 63.5, 76.2)	1

Notes

① For details regarding quantities, please contact the Technical Resource Center (TRC) at 1-877-ETN-CARE.

② Use when DS H1 Type 1, 1.25 and 1.50-inch hubs are needed.

③ RH hubs are to be used for Top Endwall (Stucco) endwalls.

Approximate Dimensions in Inches (mm)

Knockouts for Stucco and Surface Units Catalog Number—MMBE2040B200TF

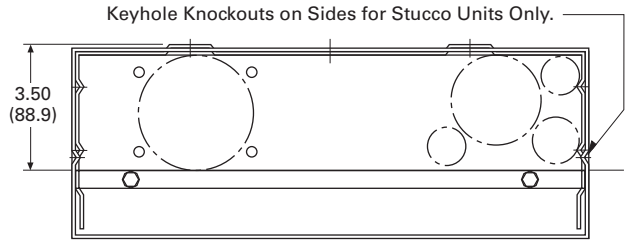

Top Stucco

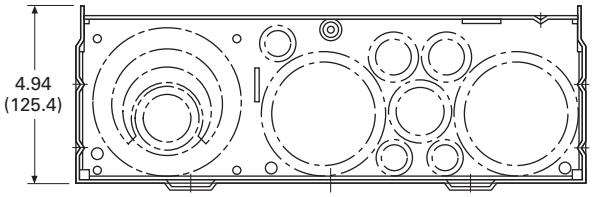

Bottom

Knockouts for Stucco and Surface Units Catalog Numbers—MBE1224B100TS, MBE1224B125TS, MBE816P200TS, MBE816P200TSCU, MBE2040B200TS, CMB1212P200BTS, CMB1212P200BTSD, CMB1212B200BTS, MB1212L200BTS and CMB1212L200BTS

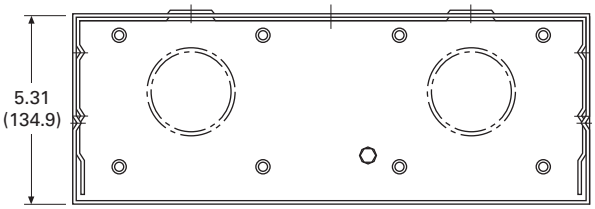

Top Surface

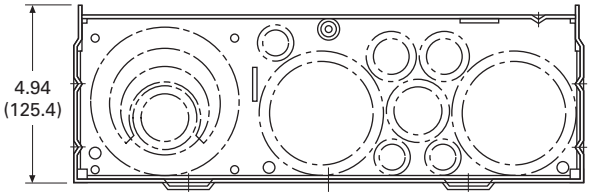

Bottom

Top Endwall (Surface)

Hub Provision Catalog Number	Quantity
DS100H2	①
DS125H2	①
DS150H2	①
DS200H2	①
DS250H2	①
DS300H2	①
DS900AP (Adapter Plate) ②	①

Top Endwall (Stucco) ③

Knockout Size Dimensions in Inches (mm)	Quantity
1.25, 1.50, 2.00, 2.50 (31.8, 38.1, 50.8, 63.5)	1
1.00, 1.25, 1.50 (25.4, 31.8, 38.1)	1
0.50, 0.75, 1.00 (12.7, 19.1, 25.4)	1
0.50, 0.75 (12.7, 19.1)	3
0.50 (12.7)	3

Bottom Endwall

Knockout Size Dimensions in Inches (mm)	Quantity
0.50 (12.7)	7
0.50, 0.75 (12.7, 19.1)	4
0.50, 0.75, 1.00 (12.7, 19.1, 25.4)	1
1.00, 1.25, 1.50, 2.00 (25.4, 31.8, 38.1, 50.8)	1
1.25, 1.50, 2.00, 2.50, 3.00 (31.8, 38.1, 50.8, 63.5, 76.2)	1

Notes

① For details regarding quantities, please contact the Technical Resource Center (TRC) at 1-877-ETN-CARE.

② Use when DS H1 Type 1, 1.25 and 1.50-inch hubs are needed.

③ RH hubs are to be used for Top Endwall (Stucco) endwalls.

Approximate Dimensions in Inches (mm)

Knockouts for Stucco and Surface Units

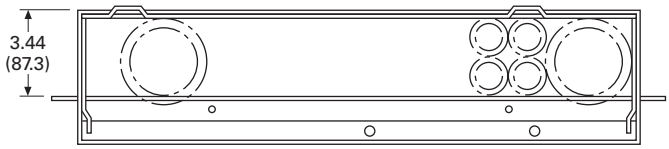

Top Flush

MBE4040B200BTF

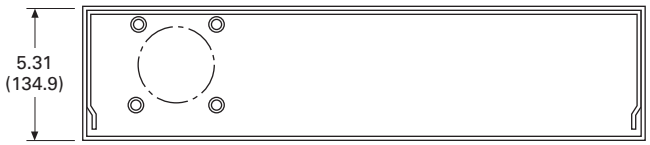

Top Surface

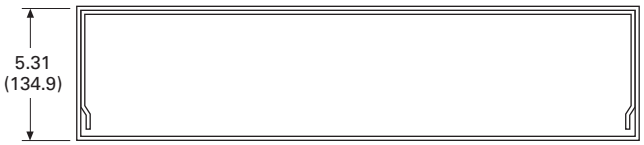

Top Surface

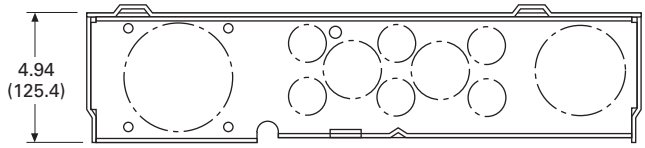

Bottom

CMBE4242B200BTS
MBE4040B200BTS

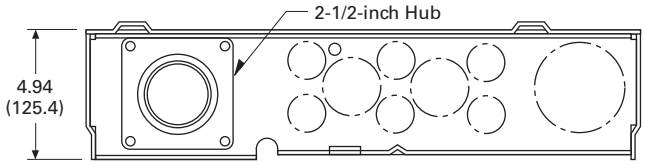

Bottom

MBE4040B200BSH

Top Endwall (Surface)

Hub Provision Catalog Number	Quantity
DS100H2	①
DS125H2	①
DS150H2	①
DS200H2	①
DS250H2	①
DS300H2	①
DS900AP (Adapter Plate) ②	①

Top Endwall (Stucco) ③

Knockout Size Dimensions in Inches (mm)	Quantity
1.25, 1.50, 2.00, 2.50 (31.8, 38.1, 50.8, 63.5)	2
0.50, 0.75 (12.7, 19.1)	3

Bottom Endwall

Knockout Size Dimensions in Inches (mm)	Quantity
0.50, 0.75 (12.7, 19.1)	6
0.50, 0.75, 1, 1.25 (12.7, 19.1, 25.4, 31.8)	2
1.00, 1.25, 1.50, 2.00, 2.50 (25.4, 31.8, 38.1, 50.8, 63.5)	1
1.00, 1.25, 1.50, 2.00, 2.50, 3.00 (25.4, 31.8, 38.1, 50.8, 63.5, 76.2)	1

Notes

① For details regarding quantities, please contact the Technical Resource Center (TRC) at 1-877-ETN-CARE.
② Use when DS H1 Type 1, 1.25 and 1.50-inch hubs are needed.
③ RH hubs are to be used for Top Endwall (Stucco) endwalls.

Approximate Dimensions in Inches (mm)

Knockout Configurations and Dimensions for Catalog Numbers MBER48B200BTS and CMBER88B200BTS

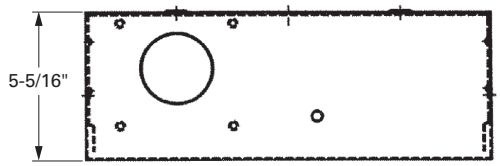

Top Surface

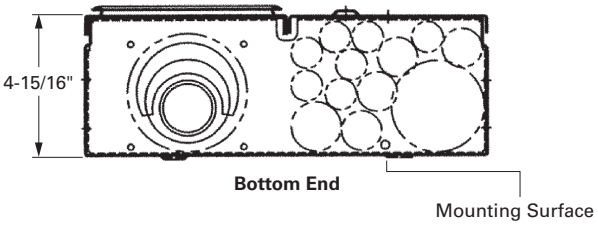

Bottom End

Semi-Flush Stucco Unit Knockout Configurations and Dimensions for MBE2040B200BTS, MBE2040B225BTS, MBE2040B200BTF and MBE2040B225BTF

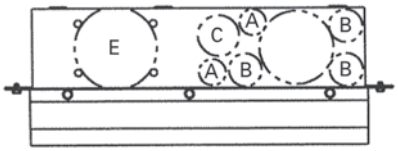

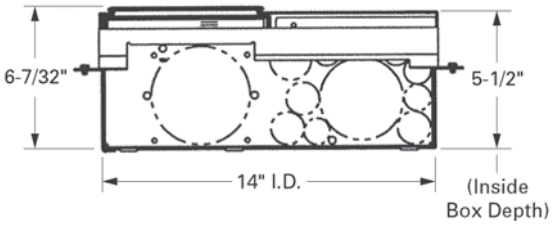

Knockout Configurations and Dimensions for Catalog Numbers CMBXP200BTS, CMBXB200BTS, CMBX1212P200BTS and CMBX3242P200BTS, CMBX3242B200BTS, CMBX1212B200BTS

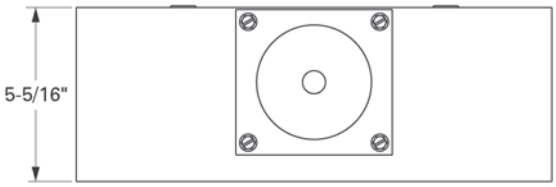

Top Endwall

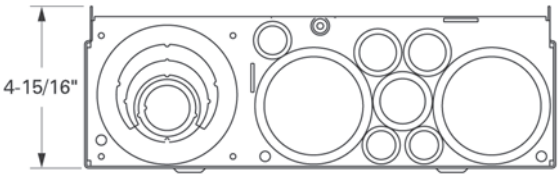

Bottom Endwall

Knockout Configurations and Dimensions for Catalog Numbers MBT48B125BTS, MBT48B150BTS, MBT48B200BTS and MBT48P200BTS

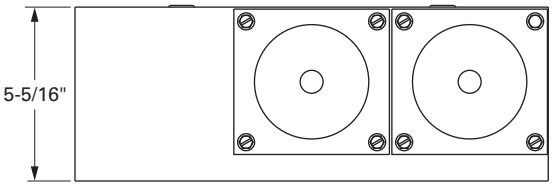

Top Surface

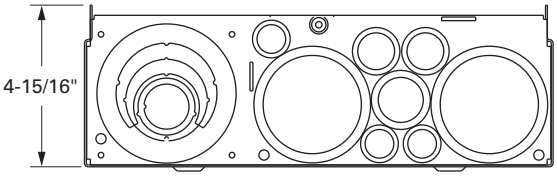

Bottom

Surface Unit Knockout Configurations and Dimensions for MBE2040B200BTS, MBE2040B225BTS, MBE2040B200BTF and MBE2040B225BTF

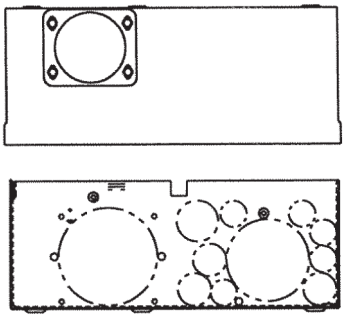

Approximate Dimensions in Inches (mm)

Knockouts for Non-EUSERC Units Catalog Numbers—MBB150BTS, MBB200BTS, MBP200BTS, MB816P200BTS, MB816P200BTSCU, MB816P200BTSD, MB816B200BTS, MB816B200BTSCU, MB2040P200BTS, MB2040B200BTS, MBP200BTSD, MBP200SD, MB816P200STD, MB2040B150SD, MB2040B200SD and MB2040P200SD

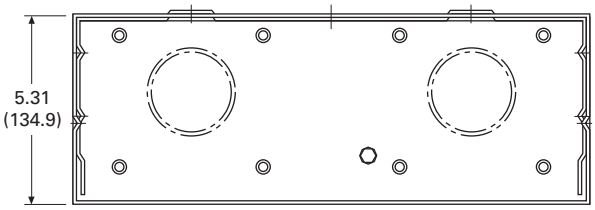

Top Surface

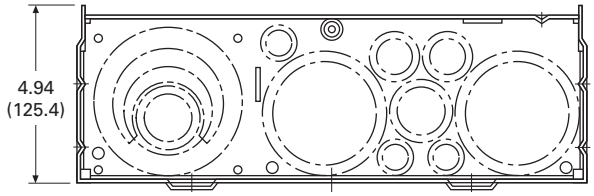

Bottom

Top Endwall (Surface)

Hub Provision Catalog Number	Quantity
DS100H2	①
DS125H2	①
DS150H2	①
DS200H2	①
DS250H2	①
DS300H2	①
DS900AP (Adapter Plate) ②	①

Knockouts for Non-EUSERC Units Catalog Number—CHMMB100BTS

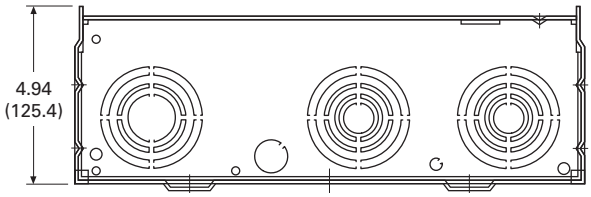

Bottom

Bottom Endwall

Knockout Size Dimensions in Inches (mm)	Quantity
0.31 (7.9)	1
0.50 (12.7)	1
0.50, 0.75, 1.00, 1.25, 1.50, 2.00, 2.50 (12.7, 19.1, 25.4, 31.8, 38.1, 50.8, 63.5)	2
1,00, 1.25, 1.50, 2.00, 2.50 (25.4, 31.8, 38.1, 50.8, 63.5)	1

Knockouts for Non-EUSERC Units Catalog Numbers—CMB2424B200BTS, MBB150BTSCR, MBB200BTSCR, MBB150BTSC, MBB200BTSC and CMB2436B200BTS

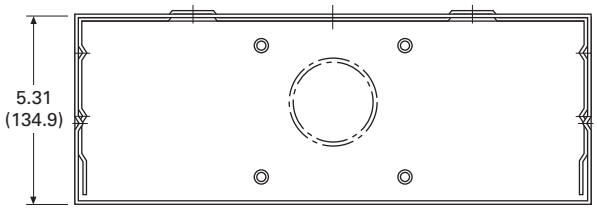

Top Surface (Catalog Numbers with SC and SCR Suffix Only)

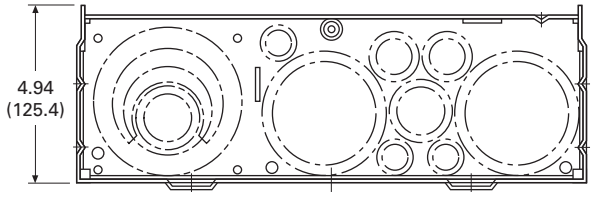

Bottom

Bottom Endwall

Knockout Size Dimensions in Inches (mm)	Quantity
0.31 (7.9)	3
0.50 (12.7)	3
0.50, 0.75 (12.7, 19.1)	2
0.75, 1.00 (12.7, 25.4)	1
1.25, 1.50, 2.00, 2.50 (19.1, 38.1, 50.8, 63.5)	2
1.50, 2.00, 2.50, 3.00 (38.1, 50.8, 63.5, 76.2)	1

Knockouts for Non-EUSERC Units Catalog Numbers—CHMMB150BTS and CHMMB200BTS

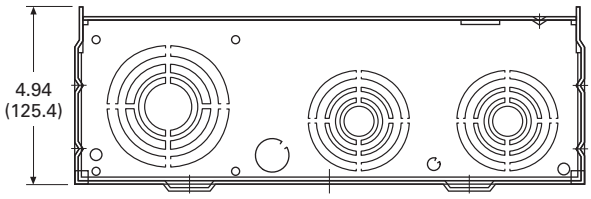

Bottom

Bottom Endwall

Knockout Size Dimensions in Inches (mm)	Quantity
0.31 (7.9)	1
0.50 (12.7)	1
0.50, 0.75, 1.00, 1.25, 1.50, 2.00, 2.50 (12.7, 19.1, 25.4, 31.8, 38.1, 50.8, 63.5)	2
1.00, 1.25, 1.50, 2.00, 2.50, 3.00 (25.4, 31.8, 38.1, 50.8, 63.5, 76.2)	1

Notes

① For details regarding quantities, please contact the Technical Resource Center (TRC) at 1-877-ETN-CARE.

② Use when DS H1 Type 1, 1.25 and 1.50-inch hubs are needed.

House Panels

Contents

Description	*Page*
Residential Meter Breakers	**V1-T4-37**
Non-EUSERC Combination Service Entrance Devices 100–200 A Styles	**V1-T4-39**
Meets EUSERC Requirements Service Entrance Devices 100–225 A.	**V1-T4-48**
West Coast All-In-One Design	**V1-T4-59**
Mechanical Interlock Cover	**V1-T4-65**
House Panels	
Commercial Safety Sockets	**V1-T4-83**
CH Style Renovation Solutions	**V1-T4-86**
Aluminum Meter Breakers	**V1-T4-87**

House Panels

Product Description

Eaton's House Panels offer a faster, easier and safer installation.These 400 A units are ideal for larger homes in North America that require meter breakers. Available in both CH and BR styles, these service entrance devices consist of a meter socket and a distribution section. In response to contractor feedback, these panels have been redesigned with a focus on flexibility, simplified wiring, and an overall ease of installation. All units come standard with a 22 kAIC main breaker.The load conductors can exit the top, bottom, side or back for greater application and installation flexibility.

Application Description

Additionally, Eaton's House Panels can be used for apartments, condominiums, clubhouses or common areas.

Features, Benefits and Functions

- NEMA 3R rainproof
- Rated for service entrance equipment
- Lever bypass socket available on certain catalog numbers
- Pin type door hinges
- Socket to distribution section is connected via insulated cable for safety
- Second main space can accept 100–200 A BW, CSR or CSR breakers

Standards and Certifications

- Ring style units meet EUSERC requirements
- UL listed

Listed

Product Selection

House Panels

400 A "House Panels"

Ampere Rating	Security ①	Bypass ②	Main Breaker	Optional Secondary Main Breaker (Not Included)	Service Type	kAIC	Dist.	Line Side Main Lugs and Neutral (Lugs Not Included)	Semi-Flush Catalog Number ③	Surface Catalog Number
300	Ringless	Lever	CSR2150	BW/CSR	OH/UG	22	8/16	Lug landings for compression	—	**HP816P300BSL**
300	Ringless	Lever	CSR2150	BW/CSR	UG	22	None		—	**HPC30SHL**
400	Ring	None	CSR2200N	CSH	UG	22	32/42		—	**CG403242SH** ④
400	Ring	None	CSR2200N	CSH	UG	22	12/12		—	**CG1212P400BS** ④⑤
400	Ring	Manual	CSR2200	BRH/CSR	UG	22	None		—	**HP40SHA** ⑥
400	Ring	Manual	CSR2200	BRH/CSR	UG	22	40/40		—	**HP404040SHA** ⑥⑦
400	Ring	None	DK2400	None	UG	22	None		—	**HP40** ④
400	Ring	None	CSR2200	BRH/CSR	UG	22	None		—	**HP40SH** ④④⑥
400	Ring	None	DK2400	None	UG	22	24/42		—	**HP402442** ④
400	Ring	None	CSR220	BRH/CSR	UG	22	40/40		**HP404040SHF** ④	**HP404040SH** ④⑥
400	Ring	Manual	CSR2200	BRH/CSR	UG	22	40/40		**HP404040SHFA** ⑦	—
400	Ring	None	CSR2200	BRH/CSR	UG	22	8/16		—	**HP816P400BS** ④⑤⑥
400	Ringless	Lever	CSR2200N	CSH	UG	22	12/12		—	**CG1212P400BSL** ⑤
400	Ringless	Lever	CSR2200N	CSH	UG	22	42/42		—	**CG404242SHL**
400	Ringless	Lever	CSR2200	BRH/CSR	UG	22	None		—	**HP40SHL** ⑥
400	Ringless	Lever	CSR2200	BRH/CSR	OH/UG	22	None		—	**HPC40SHL** ⑥
400	Ringless	Lever	CSR2200	BRH/CSR	UG	22	40/40		—	**HP404040SHL** ⑥
400	Ringless	Lever	CSR2200	BRH/CSR	UG	22	8/16		—	**HP816P400BSL** ⑤⑥
400	Ringless	Lever	CSR2200	BRH/CSR	OH/UG	22	4/6		—	**HPC4046SHLG** ⑧
400	Ringless	Lever	CSR2200	BRH/CSR	OH/UG	22	4/6		—	**HPC4046SHLX** ⑨
Bolt-On Socket										
400	Ringless	None	DK2400	None	UG	22	24/40	Lug landings for compression	—	**HP402440B** ⑩
400	Ringless	None	CSR2200	BRH/CSR	UG	22	24/40		—	**HP402440SBH** ⑥⑩

Notes

① Confirm security type for individual EUSERC utility requirements.
② Included in all of the following devices.
③ If unit needs to be semi-flush, order accessory item catalog number **HPPR** to convert **all** surface mounting devices to semi-flush mounting.
④ Reference drawing EUSERC DWG-302A, G1.
⑤ Feed-through lugs included.
⑥ For 10 kAIC, use BR or BW breakers as secondary main.
⑦ Includes manual bypass and additional ground lug to meet Nevada Power requirements.
⑧ Georgia Power approved.
⑨ Xcel approved.
⑩ Bolt-on meter socket.

Accessories

- Top-feed gutter kit to ease top-fed installation
- Re-engineered, adjustable flush mount kit for a cleaner installation
- 100 A second main breaker kit
- New 750 kcmil box type lug kit

Accessories

	Description	Catalog Number
HP40TFKIT	Top feed kit to convert surface mount house panel for overhead service	**HP40TFKIT**
HPBLK750	750 kcmil lug kit	**HPBLK750**
HPBPK	Manual bypass kit	**HPBPK**
HP2NDMNKIT 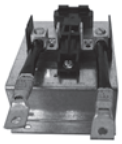	Flushmount kit	**HPPR**
	100 A 2nd main kit (Type BR branch)	**HP2NDMNKIT**
	100 A 2nd main kit (Type CH branch)	**CH2NDMNKIT**
	5th jaw for lever bypass house panels	**ARP00326CH**
	Locates 3-inch (only) incoming conduit to back of can by utilizing the 4-inch knockout useful in semi-flush applications	**HP40HUBPLATE**

Wiring Diagrams

Type CH Style House Panels

Type CH Wiring—Catalog Number CG403242SH

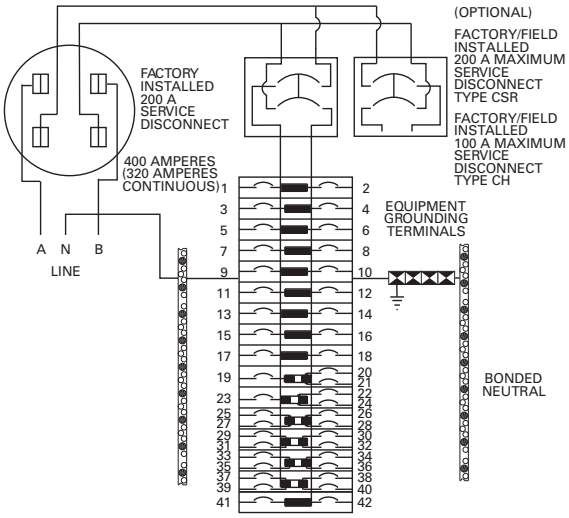

Type CH Wiring—Catalog Number CG404242SHL

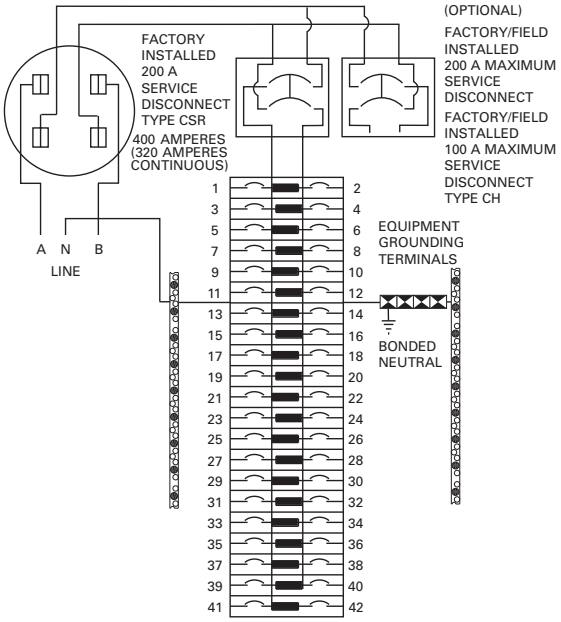

Type CH Wiring—Catalog Number CG1212P400BS

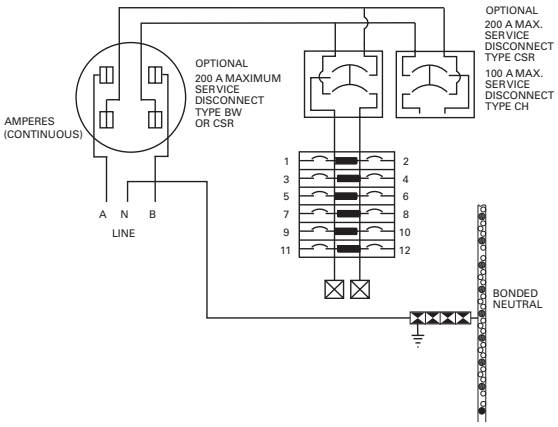

Type CH Wiring—Catalog Number CG1212P400BSL

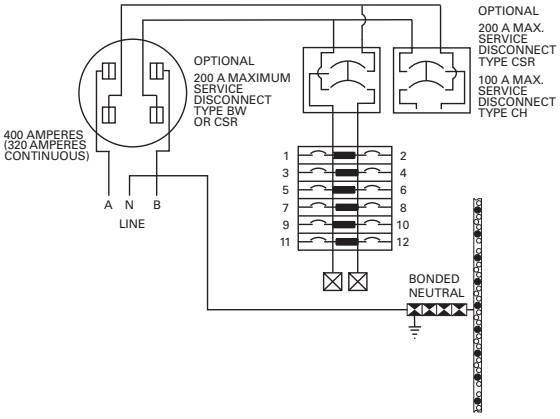

Type CH Wiring Diagram Key

- ○ #14-6 AWG
- ● #14-1/0 AWG
- ▬ 1/0 – 300 kcmil
- ⊠ #4 AWG – 300 kcmil

Type BR Style House Panels

Type BR Wiring—Catalog Number HP40

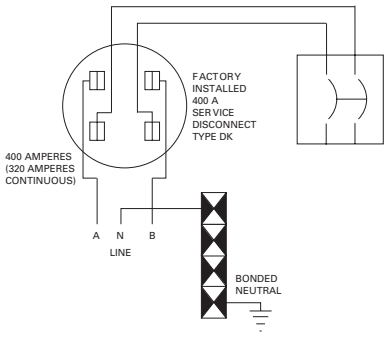

Type BR Wiring—Catalog Number HP816P400BS

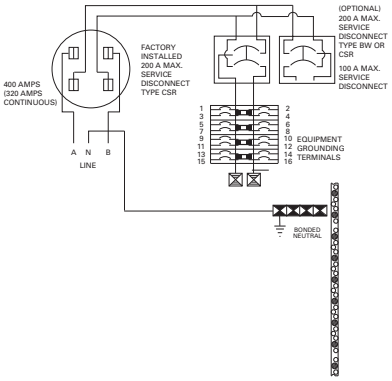

Type BR Wiring—Catalog Number HP402440B

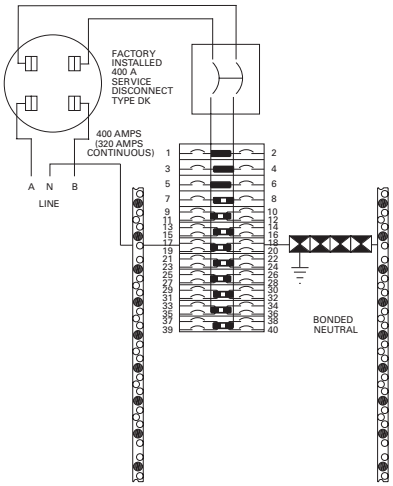

Type BR Wiring—Catalog Number HP402440SBH

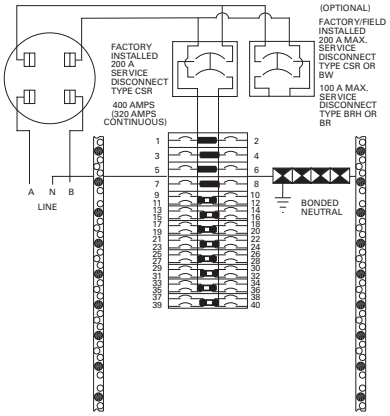

Type BR Wiring—Catalog Number HP404040SH

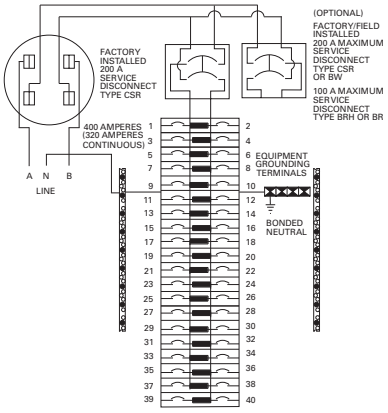

Type BR Wiring Diagram Key

- ○ #14-6 AWG
- ● #14-1/0 AWG
- ▽ #6 AWG – 250 kcmil
- ▼ #1 AWG – 300 kcmil
- ⧗ 1/0 – 300 kcmil
- ☒ #4 AWG – 300 kcmil
- ☒ #6 AWG – 300 kcmil

Type BR Wiring—Catalog Number HP402442

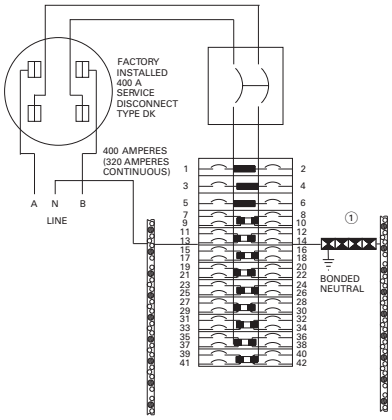

Type BR Wiring—Catalog Number HP404040SHL

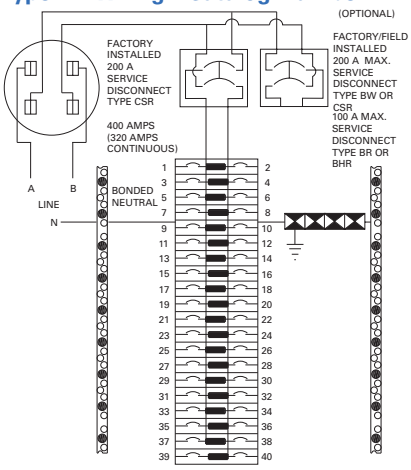

Type BR Wiring—Catalog Number HP40SH

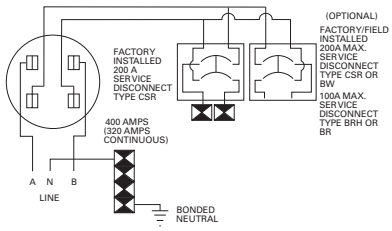

Type BR Wiring—Catalog Number HP40SHL

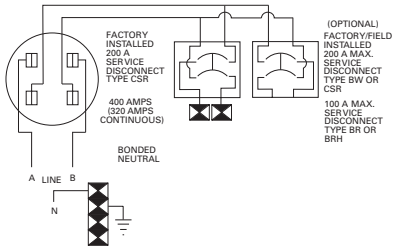

Type BR Wiring—Catalog Number HP404040SHA

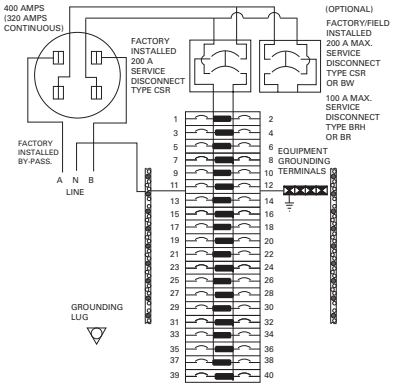

Type BR Wiring—Catalog Number HP816P400BSL

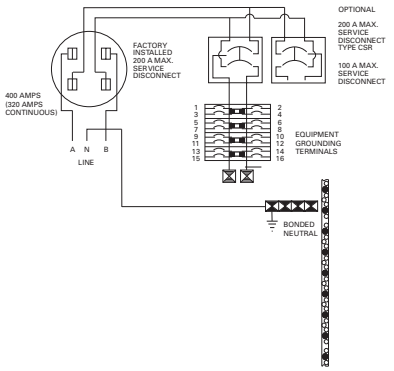

Type BR Wiring Diagram Key

- ○ #14-6 AWG
- ● #14-1/0 AWG
- ▽ #6 AWG – 250 kcmil
- ▼ #1 AWG – 300 kcmil
- ⧗ 1/0 – 300 kcmil
- ⧗ 1/3 – 300 kcmil ①
- ⊠ #4 AWG – 300 kcmil
- ⊠ #6 AWG – 300 kcmil

Catalog Numbers HPC40SHL and HPC30SHL

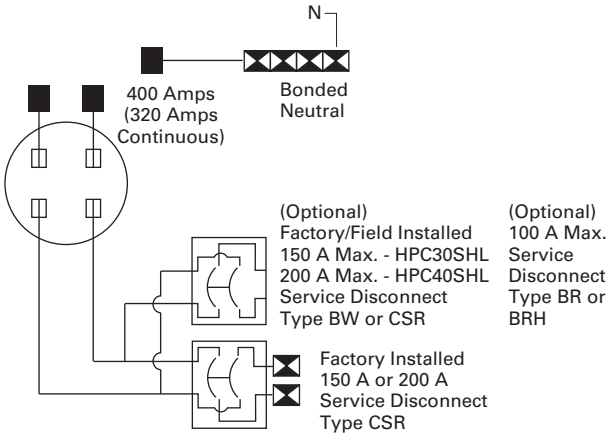

Dimensions and Knockouts

Approximate Dimensions in Inches (mm)

Catalog Numbers HPC40SHL and HPC30SHL

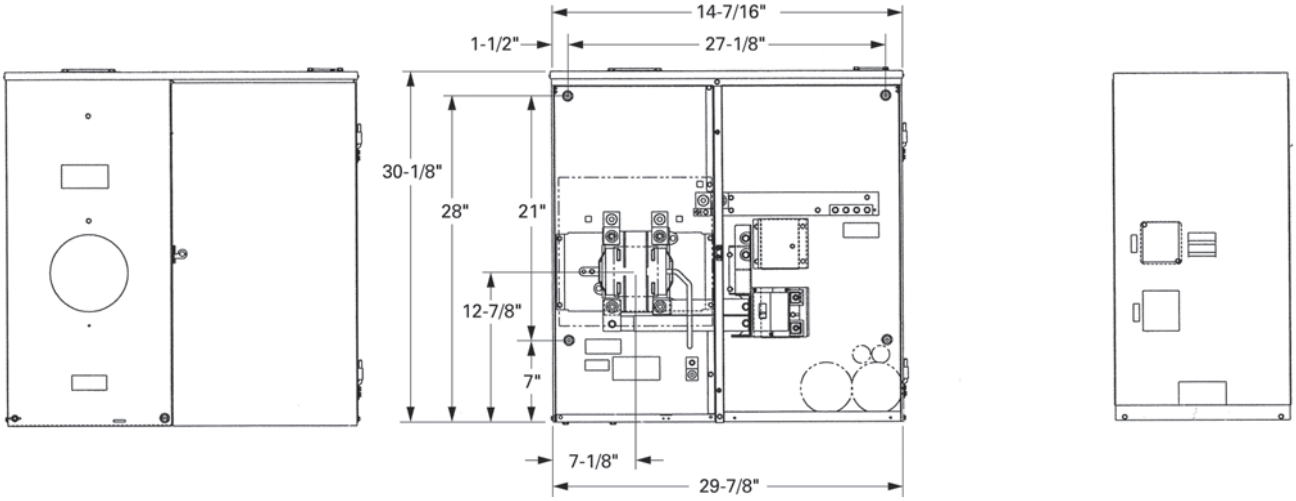

Knockout Configurations and Dimensions for HPC40SHL and HPC30SHL

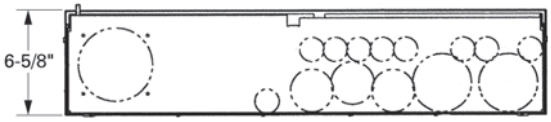

Approximate Dimensions in Inches (mm)

House Panel Dimensions and Knockouts—For All House Panels Except Those With HPCPREFIX

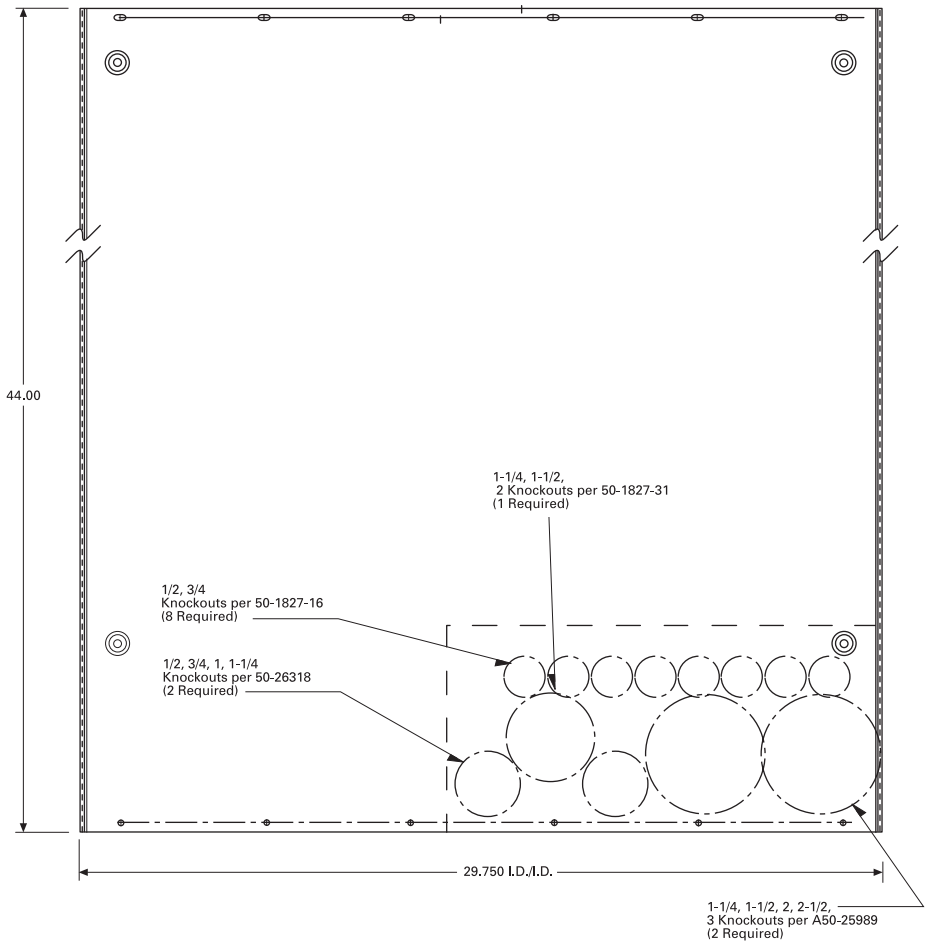

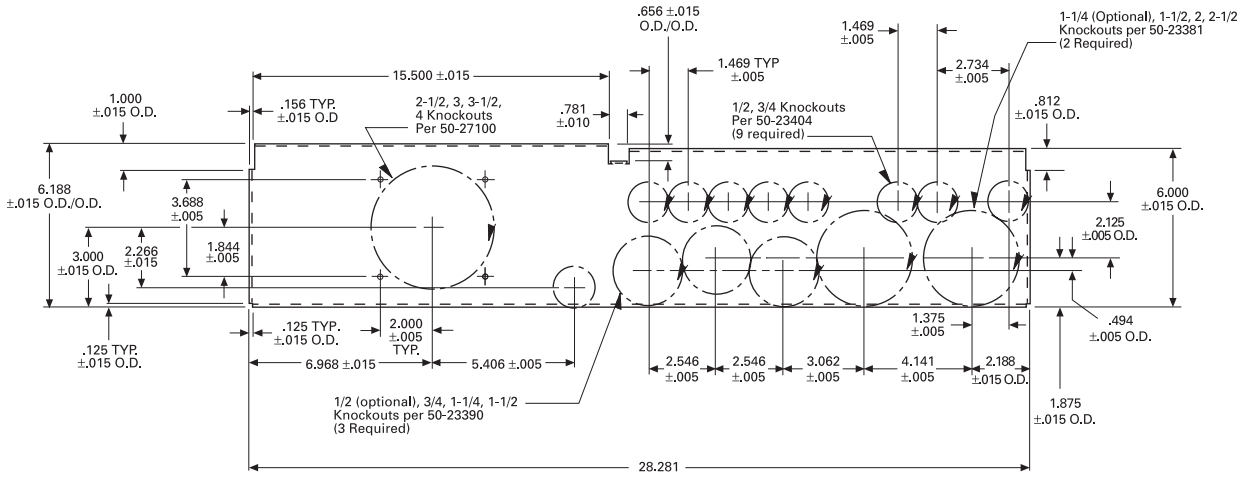

Residential Meter Breakers

Contents

Description	*Page*
Residential Meter Breakers	**V1-T4-37**
Non-EUSERC Combination Service Entrance Devices 100–200 A Styles	**V1-T4-39**
Meets EUSERC Requirements Service Entrance Devices 100–225 A.	**V1-T4-48**
West Coast All-In-One Design	**V1-T4-59**
Mechanical Interlock Cover	**V1-T4-65**
House Panels	**V1-T4-75**
Commercial Safety Sockets	
CH Style Renovation Solutions	**V1-T4-86**
Aluminum Meter Breakers	**V1-T4-87**

Commercial Safety Sockets

Product Description

A Commercial Safety Socket is service entrance equipment that consists of a commercial meter socket with a test block, and may come with or without a loadcenter type distribution section.

Application Description

Eaton's Commercial Safety Sockets are typically used where a single meter socket or single meter socket with a distribution section are needed. These areas could include a commercial business, commercial office building, individual retail facilities and signs and street lighting. Commercial Safety Sockets are typically used in EUSERC utility regions.

Features, Benefits and Functions

Commercial Safety Sockets with No Secondary Feeder

- Ring type continuous duty meter socket. 600 Vac maximum, single- or three-phase
- 100 and 200 A units
- Bussed connection from meter socket to test block
- For use with self-contained watthour meter
- Conform with EUSERC standards
- NEMA 3R construction for indoor/outdoor applications
- Units can be individually mounted with provisions for hub kits and pole mounting

Overhead Combination Units

- NEMA 3R construction for indoor/outdoor applications
- T-fuse protection, 480 Vac maximum
- Line at top, load at bottom
- 100 and 200 A units available up to 480 Vac maximum
- Circuit breaker protection to 480 Vac maximum in 10, 22, 42 and 100 kAIC ratings
- Factory-cabled connection from test block to line side of tenant main

Underground Combination Units

- 100 and 200 A units
- 480 Vac maximum
- NEMA 3R construction for indoor/outdoor applications
- Underground or overhead feed
- Provisions for self-contained watthour meter
- Bussed connection from meter socket to test block
- Tenant main disconnects are available with circuit breakers up to 480 Vac maximum and T-fuse mains, 240 Vac maximum
- Load wires can exit top or bottom

Product Selection

Overhead and Underground Combination Units and Individual Units

CH127TB

Individual Safety Sockets—600 V Maximum—No Secondary Feeder Devices ①

Ampere Rating	No. of Jaws	AC Voltage	Service	Phase, Wire	Maximum Interrupting Rating	Wire Size	Catalog Number
125	4	600	OH/UG	Single-phase, three-wire	②	#14–2/0	**CH114TB**
125	5	600	OH/UG	Three-phase, three-wire	②	#14–2/0	**CH115TB**
125	7	600	OH/UG	Three-phase, four-wire	②	#14–2/0	**CH117TB**
200	4	600	OH/UG	Single-phase, three-wire	②	#6–250 kcmil	**CH124TB**
200	5	600	OH/UG	Three-phase, three-wire	②	#6–250 kcmil	**CH125TB**
200	7	600	OH/UG	Three-phase, four-wire	②	#6–250 kcmil	**CH127TB**

Commercial Safety Sockets with Provision for Main Circuit Breaker ③

Ampere Rating	No. of Jaws	AC Voltage	Service	Phase, Wire	Feeder Circuit Breaker	Maximum Interrupting Rating	Wire Size	Catalog Number
125	4	240	OH	Single-phase, three-wire	Provision ④	⑥	#14–2/0	**CH214MTBLB**
125	7	208/120	OH	Three-phase, four-wire	Provision ④	⑥	#14–2/0	**CH217MTBLB**
125	4	240	UG	Single-phase, three-wire	Provision ④	⑥	#14–2/0	**CHU214MTBLB**
125	7	208/120	UG	Three-phase, four-wire	Provision ④	⑥	#14–2/0	**CHU217MTBLB**
200	4	120/240	OH	Single-phase, three-wire	Provision ⑤	⑦	#6–250 kcmil	**CH224MTBLB**
200	7	208/120	OH	Three-phase, four-wire	Provision ⑤	⑦	#6–250 kcmil	**CH227MTBLB**
200	4	120/240	UG	Single-phase, three-wire	Provision ⑤	⑦	#6–250 kcmil	**CHU224MTBLB**
200	7	208/120	UG	Three-phase, four-wire	Provision ⑤	⑦	#6–250 kcmil	**CHU227MTBLB**

Commercial Safety Sockets with Main Circuit Breaker Included ③

Ampere Rating	No. of Jaws	AC Voltage	Service	Phase, Wire	Feeder Circuit Breaker	Maximum Interrupting Rating	Wire Size	Catalog Number
100	7	480/277	OH	Three-phase, four-wire	EHD3100	14 kA	#14–2/0	**CH217MTBM515**
100	7	480/277	UG	Three-phase, four-wire	EHD3100	14 kA	#14–2/0	**CHU217MTBMS15**
200	7	480/277	OH	Three-phase, four-wire	JD3200	25 kA	#6–250 kcmil	**CH227MTBHMS15**
200	7	480/277	UG	Three-phase, four-wire	JD3200	25 kA	#6–250 kcmil	**CHU227MTBHMS15**

Notes

① Reference drawing EUSERC DWG-305, G1.
② If being protected by a fuse, the interrupting rating of the unit is limited to the fuse AIC rating. If being protected by a single- or three-phase, 600 V breaker, the AIC is 14 kA; by a maximum 400 A, single-phase, 240 V breaker, the AIC is 18 kA; by a maximum 200 A, single- or three-phase, 240 V breaker, the AIC is 18 kA; by a maximum 125 A, single-phase, 240 V breaker, the AIC is 22 kA.
③ Reference drawing EUSERC DWG-305A, G1.
④ Order plug-on Type BR, BRH or BRHH circuit breaker separately.
⑤ Order Type CC breaker or CCH breaker separately.
⑥ Type BR = 10 kA; Type BRH = 22 kA; Type BRHH = 42 kA.
⑦ Type CCV = 10 kA; Type CCVH = 25 kA.

Underground Combination Units and Safety Socket Accessories

CHU227MTBP

Commercial Safety Sockets with T-Fuse Switch ①

Ampere Rating	No. of Jaws	AC Voltage	Service	Phase, Wire	Feeder Circuit Breaker	Maximum Interrupting Rating	Wire Size	
100	4	120/240	OH	Single-phase, three-wire	200 kA	#14–2/0		**CH214MTBP**
100	7	208/120	OH	Three-phase, four-wire	200 kA	#14–2/0		**CH217MTBP**
100	4	120/240	UG	Single-phase, three-wire	200 kA	#14–2/0		**CHU214MTBP**
100	7	208/120	UG	Three-phase, four-wire	200 kA	#14–2/0		**CHU217MTBP**
200	4	120/240	OH	Single-phase, three-wire	200 kA	#6–250 kcmil		**CH224MTBP**
200	7	208/120	OH	Three-phase, four-wire	200 kA	#6–250 kcmil		**CH227MTBP**
200	4	120/240	UG	Single-phase, three-wire	200 kA	#6–250 kcmil		**CHU224MTBP**
200	7	208/120	UG	Three-phase, four-wire	200 kA	#6–250 kcmil		**CHU227MTBP**

Hubs

Description	Carton Weight Lbs (kg)	Catalog Number
Hub closure plate	3 (1.4)	**ARP00002CHB**
1.00-inch (25.4 mm) hub	3 (1.4)	**ARP00003CH1**
1.25-inch (31.8 mm) hub	3 (1.4)	**ARP00004CH12**
1.50-inch (38.1 mm) hub	3 (1.4)	**ARP00005CH15**
2.00-inch (50.8 mm) hub	3 (1.4)	**ARP00006CH2**
2.50-inch (63.5 mm) hub	3 (1.4)	**ARP00007CH25**

Jaws

Description	Part Number
5th jaw kit	**CH50371**

Notes

① Reference drawing EUSERC DWG-305A, G1.

Order Type CC or CHH breaker separately.

CH Style Renovation Solutions

Contents

Description	*Page*
Residential Meter Breakers	**V1-T4-37**
Non-EUSERC Combination Service Entrance Devices 100–200 A Styles	**V1-T4-39**
Meets EUSERC Requirements Service Entrance Devices 100–225 A.	**V1-T4-48**
West Coast All-In-One Design	**V1-T4-59**
Mechanical Interlock Cover	**V1-T4-65**
House Panels	**V1-T4-75**
Commercial Safety Sockets	**V1-T4-83**
CH Style Renovation Solutions Aluminum Meter Breakers	**V1-T4-87**

CH Style Renovation Solutions

Product Description

- Ring style meter socket design
- Provisional main breaker or factory main breaker available
- Center top feed design
- Exit bottom or top design
- 100 A, 125 A or 200 A ratings available

Product Selection

CH Style Retrofit Solutions ①

Ampere Rating	Description	Catalog Number
100	CH, 22 circuit, provision, center top feed, exit top or bottom, flush, OH/UG	**CMBE22P100BTFR**
125	CH, 22 circuit, provision, center top feed, exit top or bottom, surface, OH/UG	**CMBE22P125BTSR**
125	CH, 22 circuit, provision, center top feed, exit top or bottom, flush, OH/UG	**CMBE22P125BTFR**
200	CH, 32/42 circuit, 200 A main breaker, center top feed, exit top or bottom, semi-flush, OH/UG	**CMBE3242B200BTS**
200	CH, 32/42 circuit, 200 A main breaker, center top feed, exit top or bottom, flush, OH/UG	**CMBE3242B200BTFR**

Note

① Reference drawing EUSERC DWG-308, G1.

Contents

Description	*Page*
Residential Meter Breakers	**V1-T4-37**
Non-EUSERC Combination Service Entrance Devices 100–200 A Styles	**V1-T4-39**
Meets EUSERC Requirements Service Entrance Devices 100–225 A.	**V1-T4-48**
West Coast All-In-One Design	**V1-T4-59**
Mechanical Interlock Cover	**V1-T4-65**
House Panels	**V1-T4-75**
Commercial Safety Sockets	**V1-T4-83**
CH Style Renovation Solutions	**V1-T4-86**
Aluminum Meter Breakers	

Aluminum Meter Breakers

Product Description

Eaton's Aluminum Meter Breaker enclosure and external cover offers excellent corrosion resistance in the harshest coastal environments. The meter breaker's light weight and overhead/underground design offers flexibility and ease of installation.

Features and Benefits

- Overhead/underground design provides flexibility with wiring options
- Steel meter guides are standard, which provides a means of easy installation of the utility glass bulb meter into the meter's jaws
- Main Lug Only design includes six two-pole breaker locations, which complies with National Electrical Code 225.33 (maximum number of disconnects)
- Distribution section accepts BR branch breakers
- Single-phase, three-wire 120/240 Vac applications
- Hub closure plate is provided, attached to the top of the device
- Optional fifth jaw can be applied to 3 o'clock or 9 o'clock meter socket position
- 10-year warranty
- For customer support, contact Eaton's Technical Resource Center at 1-877-ETN-CARE
- For additional information or to place an order, contact your local Eaton representative or visit us at www.eaton.com

Catalog Number Selection

Meter Breakers

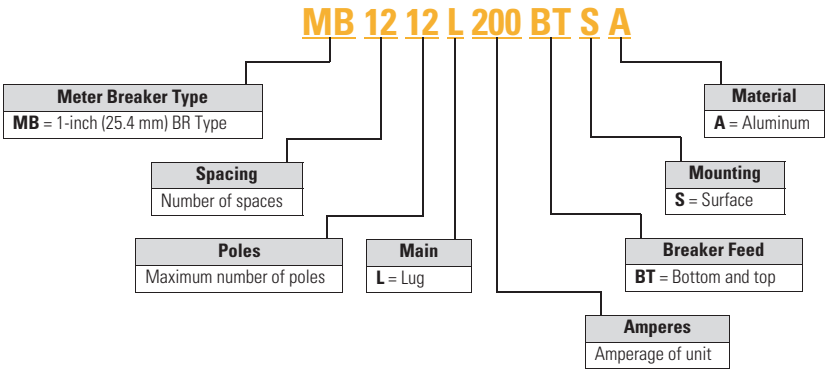

Systems for Residential and Commercial Application

Contents

Description	*Page*
Systems for Residential and Commercial Applications	
Meter Packs	**V1-T4-90**
Type CCV 120/240 V Tenant Main Circuit Breaker	**V1-T4-95**
Type CV 120/240 V Tenant Main Circuit Breaker	**V1-T4-96**
Meter Packs—1MP, 1MM and 3MM Main Tenant Circuit Breakers	**V1-T4-98**
Main Service Modules	**V1-T4-101**
Surge Metering	**V1-T4-115**
Group Metering Inline Current Transformer Cabinets	**V1-T4-116**
Residential Meter Stacks	**V1-T4-118**
1MP, 1MM and 3MM Main Tenant Circuit Breakers	**V1-T4-127**
Phase Balanced Stack	**V1-T4-128**
Commercial Meter Stack Modules	**V1-T4-129**
35MM, 37MM, 35SS and 37SS Main Tenant Circuit Breakers	**V1-T4-136**

Systems for Residential and Commercial Applications

Product Description

Group metering is a service entrance product line that consists of a main device and multiple meter sockets in one enclosure or several connected enclosures. Group metering allows the customer to install a multiple tenant-metering device in one location while providing a space and installation cost savings.

Application Description

Eaton's Electrical Sector offers two group metering designs—Meter Packs and Gangable Metering. Meter Packs, also called All-in-Ones, consist of main lugs and up to six meter sockets in one enclosure. Meter Packs are supplied as one complete unit and the user cannot "add" additional meter sockets to the unit in the future. The most common application for Meter Packs is garden apartments, small condominiums and townhouses where six or less units are metered through one centrally located Meter Pack.

Gangable Metering (Main Service Modules and Meter Stacks)

The second type of group metering is Gangable Metering, which consists of a Main Service Module used in conjunction with a Meter Stack to make a custom metering lineup. The Main Service Module can be main lug, main circuit breaker, main fusible switch or bolted pressure switch. The Meter Stack is offered with various meter sockets and bus ratings. This type of custom lineup allows the owner to add/remove meter sockets and main devices to meet future need. Gangable Metering is often used in large condominiums, strip malls and light commercial applications where more than six units are metered, or there will be a future need to add more units.

Features, Benefits and Functions

Clip-Tight™ Socket

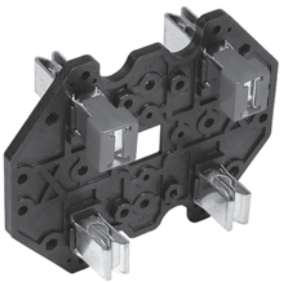

Clip-Tight Socket

Eaton's series of 1MP, 1MM, 3MM metering devices incorporate the only socket base in the industry without fasteners. This component uses jaws on both sides of a thermoplastic polyester glass fiber reinforced (PBT) base, eliminating the need for self-tapping screw connections to vertical busbars.

Field Phase Balancing

Field Phase Balancing

Due to popular incoming three-phase voltage systems and single-phase outgoing loads, installers have the option to field phase balance on the individual stack (A-B, B-C, A-C). This feature eliminates the chance of installing an incorrectly phased device due to its versatility.

Lever Bypass

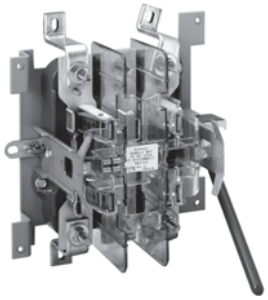

Lever Bypass

Due to commercial requirements, Eaton offers a lever bypass (as standard) on all 35MM and 37MM devices. Each socket base consists of a lever bypass, which also releases the jaws (when lever is engaged in bypass position), enabling utility company mechanics to easily remove and/or insert utility meter.

Main Tenant Breaker Cover

Main Tenant Breaker Cover

Each tenant circuit breaker is protected by a lockable raintight cover that secures the breaker against unauthorized operation. The tenant breaker cover is a high impact plastic to resist wear, rusting and corrosion.

One-Piece Vertical Busbar

One-Piece Vertical Busbar

Eaton's series of 1MP, 1MM, 3MM meter stacks embody a one-piece busbar construction to each socket, as well as a one-piece cross bus to each tenant main. Because the Eaton design uses the Clip-Tight meter socket and does not have busbar joints, the chance of hot spots occurring is virtually eliminated.

Horn and Manual Bypass

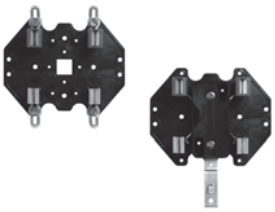

Horn and Manual Bypass

With an increasing demand for uninterrupted power, Eaton's series of 1MP, 1MM and 3MM meter sockets offer horn (ringless style) and manual (ring style) field-installable bypass accessories. These accessories provide uninterrupted tenant service if a meter is pulled for inspection or replacement.

Test Bypass Disconnects

Test Bypass Disconnects

Eaton also provides commercial meter stacks with EUSERC required test-bypass disconnects (35SS and 37SS). This bypass is used in the same applications as the lever bypass and it is required by EUSERC utilities.

Mounting Features

Mounting Features

A standard mounting rail and factory-installed swing away feet speed up and simplify installation.

Standards and Certifications

- UL listed

Listed

Meter Pack

Contents

Description	*Page*
Systems for Residential and Commercial Applications	**V1-T4-88**
Meter Packs	
Type CCV 120/240 V Tenant Main Circuit Breaker	**V1-T4-95**
Type CV 120/240 V Tenant Main Circuit Breaker	**V1-T4-96**
Meter Packs—1MP, 1MM and 3MM Main Tenant Circuit Breakers	**V1-T4-98**
Main Service Modules	**V1-T4-101**
Surge Metering	**V1-T4-115**
Group Metering Inline Current Transformer Cabinets	**V1-T4-116**
Residential Meter Stacks	**V1-T4-118**
1MP, 1MM and 3MM Main Tenant Circuit Breakers	**V1-T4-127**
Phase Balanced Stack	**V1-T4-128**
Commercial Meter Stack Modules	**V1-T4-129**
35MM, 37MM, 35SS and 37SS Main Tenant Circuit Breakers	**V1-T4-136**

Meter Packs

Product Overview

- Eaton's 1MP units are self-contained (main terminal box included) for installations requiring up to six meter socket positions in a single enclosure
- Units are not gangable with any other metering device
- Approved by major power companies, UL listed, suitable as service equipment and meet the service and electrical requirements of EUSERC and CECHA
- Series rating up to 100 kAIC
- All ringless cover devices include fifth jaw as standard
- Ring type devices do not include fifth jaw as standard. Order 1MM5JK if needed
- Bondable neutral
- 120/240 Vac, single-phase three-wire metering device
- Up to 600 A maximum horizontal bus rating
- Incoming lugs not included (phase A, phase B and neutral)
- Indoor/outdoor construction
- Provision for two-pole breaker (plug-on type for 125 A sockets and bolt-on type for 200 A sockets)—circuit breakers not included
- Underground incoming feed
- Aluminum or copper bus

Catalog Number Selection

1 MP 4 12 4 R C

Single-Phase

Type of Metering
MP = Meter pack

Number of Meters
2, 3, 4, 5 or 6
Blank = Accessory

Ampere Rating
12 = 125 A
20 = 200 A
Blank = Accessory

Bus Ampere Rating
2 = 200 A
4 = 400 A
6 = 600 A
Blank = Accessory

Security or Accessory Code
R= Ring
RRL = Ringless
RRLB = Ringless with horn bypass
LK = Lug kit (accessory)
SC = Crimp lug landing pad kit (accessory)

Bus Material
C = Copper bus
Blank = Aluminum bus

When Ordering:

1. Determine catalog number of the basic device.
2. Include Lug Kit for incoming section. See **Page V1-T4-94**.
3. Find quantity and catalog numbers for tenant circuit breakers. (Order one breaker per socket.) See **Page V1-T4-94**.
4. Select required accessories. See **Page V1-T4-138**.

Product Selection

Meter Packs

Aluminum Bus—Main Lugs Not Included—See Page V1-T4-94

Socket Ampere Rating	Number of Meter Sockets	Bus Ampere Rating	Main Tenant Breaker Type (See Page V1-T4-94)	Catalog Number	Semi-Flush Flange Kit Catalog Number
Ring Style Meter Socket Covers ①②					
125 ③	2 ⑤	200	Plug-on type BR2_ BRH2_ BRHH2_ BRX2_	**1MP2122R** ⑥⑨	**1MPSFK1**
125 ③	3	400		**1MP3124R** ⑦	**1MPSFK2**
125 ③	4	400		**1MP4124R** ⑦	**1MPSFK2**
125 ③	5 ⑤	600		**1MP5126R** ⑦	**1MPSFK3**
125 ③	6 ⑤	600		**1MP6126R** ⑦	**1MPSFK3**
200 ④	2	400	Bolt-on type CCV2_X CCVH2_X CVS2_XMM CV2_XMM CVH2_XMM	**1MP2204R** ⑦	**1MPSFK4**
200 ④	3	600		**1MP3206R** ⑦	**1MPSFK5**
200 ④	4	600		**1MP4206R** ⑦	**1MPSFK5**
200 ④	5	600		**1MP5206R** ⑦	**1MPSFK6**
200 ④	6	600		**1MP6206R** ⑦	**1MPSFK6**
Ringless Style Meter Socket Covers ⑧					
125	2	200	Plug-on type BR2_ BRH2_ BRHH2_ BRX2_	**1MP2122RRL** ⑥⑨	**1MPSFK1**
125	3	400		**1MP3124RRL** ⑦	**1MPSFK2**
125	4	400		**1MP4124RRL** ⑦	**1MPSFK2**
125	5	600		**1MP5126RRL** ⑦	**1MPSFK3**
125	6	600		**1MP6126RRL** ⑦	**1MPSFK3**
200	2	400	Bolt-on type CCV2_X CCVH2_X CVS2_XMM CV2_XMM CVH2_XMM	**1MP2204RRL** ⑦	**1MPSFK4**
200	3	600		**1MP3206RRL** ⑦	**1MPSFK5**
200	4	600		**1MP4206RRL** ⑦	**1MPSFK5**
200	5	600		**1MP5206RRL** ⑦	**1MPSFK6**
200	6	600		**1MP6206RRL** ⑦	**1MPSFK6**
Ringless Style Covers with Horn Bypass ⑧					
125	2	200	Plug-on type BR2_ BRH2_ BRHH2_ BRX2_	**1MP2122RRLB** ⑥⑨	**1MPSFK1**
125	3	400		**1MP3124RRLB** ⑦⑩	**1MPSFK2**
125	4	400		**1MP4124RRLB** ⑦⑩	**1MPSFK2**
125	5	600		**1MP5126RRLB** ⑦⑩	**1MPSFK3**
125	6	600		**1MP6126RRLB** ⑦⑩	**1MPSFK3**
200	2	400	Bolt-on type CCV2_X CCVH2_X CVS2_XMM CV2_XMM CVH2_XMM	**1MP2204RRLB** ⑦⑩	**1MPSFK4**
200	3	600		**1MP3206RRLB** ⑦⑩	**1MPSFK5**
200	4	600		**1MP4206RRLB** ⑦⑩	**1MPSFK5**
200	5	600		**1MP5206RRLB** ⑦⑩	**1MPSFK6**
200	6	600		**1MP6206RRLB** ⑦⑩	**1MPSFK6**

Notes

① Ring Style Meter Packs do not come with fifth jaw. Order **1MM5JK** if needed.
② Reference drawing EUSERC DWG-342, G1.
③ To change in field from ring to ringless—order **1MMRC125**.
④ To change in field from ring to ringless—order **1MMRC200**.
⑤ To change from ring to ringless covers, the top socket only in 2, 5 and 6 socket designs—order **1MMRC125T**. Top socket only.
⑥ Main lugs included. #6–300 kcmil. (Optional lugs are not available.)
⑦ For overhead use, order DS_H2 type hub.
⑧ Fifth jaw factory installed at 9 o'clock position.
⑨ For overhead use, order DS type hub.
⑩ To order with raceway provision in bottom endwall, add "T" suffix to the catalog number. Trough accessory catalog number is **1008934CH**.

See **Page V1-T4-94** for Main Lug Kit selection and Wire Sizes.

Copper Bus—Main Lugs Not Included—See Page V1-T4-94

Socket Ampere Rating	Number of Meter Sockets	Bus Ampere Rating	Main Tenant Breaker Type (See Page V1-T4-94)	Catalog Number	Semi-Flush Flange Kit Catalog Number
Ring Style Meter Socket Covers ①②					
125 ③	2 ⑤	200	Plug-on type BR2_ BRH2_ BRHH2_ BRX2_	**1MP2122RC** ⑦	**1MPSFK1**
125 ③	3	400		**1MP3124RC** ⑧	**1MPSFK2**
125 ③	4	400		**1MP4124RC** ⑧	**1MPSFK2**
125 ③	5 ⑤	600		**1MP5126RC** ⑧	**1MPSFK3**
125 ③	6 ⑤	600		**1MP6126RC** ⑧	**1MPSFK3**
200 ④	2	400	Bolt-on type CCV2_X CCVH2_X CVS2_XMM CV2_XMM CVH2_XMM	**1MP2204RC** ⑧	**1MPSFK4**
200 ④	3	600		**1MP3206RC** ⑧	**1MPSFK5**
200 ④	4	600		**1MP4206RC** ⑧	**1MPSFK5**
200 ④	5	600		**1MP5206RC** ⑧	**1MPSFK6**
200 ④	6	600		**1MP6206RC** ⑧	**1MPSFK6**
Ringless Style Meter Socket Covers ⑥					
125	2	200	Plug-on type BR2_ BRH2_ BRHH2_ BRX2_	**1MP2122RRLC** ⑧	**1MPSFK1**
125	3	400		**1MP3124RRLC** ⑧	**1MPSFK2**
125	4	400		**1MP4124RRLC** ⑧	**1MPSFK2**
125	5	600		**1MP5126RRLC** ⑧	**1MPSFK3**
125	6	600		**1MP6126RRLC** ⑧	**1MPSFK3**
200	2	400	Bolt-on type CCV2_X CCVH2_X CVS2_XMM CV2_XMM CVH2_XMM	**1MP2204RRLC** ⑧	**1MPSFK4**
200	3	600		**1MP3206RRLC** ⑧	**1MPSFK5**
200	4	600		**1MP4206RRLC** ⑧	**1MPSFK5**
200	5	600		**1MP5206RRLC** ⑧	**1MPSFK6**
200	6	600		**1MP6206RRLC** ⑧	**1MPSFK6**
Ringless Style Covers with Horn Bypass ⑥					
125	2	200	Plug-on type BR2_ BRH2_ BRHH2_ BRX2_	**1MP2122RRLBC** ⑧	**1MPSFK1**
125	3	400		**1MP3124RRLBC** ⑧	**1MPSFK2**
125	4	400		**1MP4124RRLBC** ⑧	**1MPSFK2**
125	5	600		**1MP5126RRLBC** ⑧	**1MPSFK3**
125	6	600		**1MP6126RRLBC** ⑧	**1MPSFK3**
200	2	400	Bolt-on type CCV2_X CCVH2_X CVS2_XMM CV2_XMM CVH2_XMM	**1MP2204RRLBC** ⑧	**1MPSFK4**
200	3	600		**1MP3206RRLBC** ⑧	**1MPSFK5**
200	4	600		**1MP4206RRLBC** ⑧	**1MPSFK5**
200	5	600		**1MP5206RRLBC** ⑧	**1MPSFK6**
200	6	600		**1MP6206RRLBC** ⑧	**1MPSFK6**

Notes

① Ring Style Meter Packs do not come with fifth jaw. Order **1MM5JK** if needed.
② Reference drawing EUSERC DWG-342, G1.
③ To change in field from ring to ringless—order **1MMRC125**.
④ To change in field from ring to ringless—order **1MMRC200**.
⑤ To change in field from ring to ringless covers, the top socket only in 5 to 6 socket design—order **1MMRC125T**. Top socket only—other sockets see ③.
⑥ Fifth jaw factory installed at 9 o'clock position.
⑦ For overhead use, order DS_H2 type hub.
⑧ For overhead use, order DS_MH type hub.

1MPLK3

Main Lug Selection—Field-Installed Lugs for 400 or 600 A Main Bus

Line Lug and Wire Sizes Order Separately and Field Install	Line Lug Kit Catalog Number Order Three Kits (For Two Lines and Neutral)
(1) #6–600 kcmil or (2) 2/0–250 kcmil	**1MPLK1**
(2) 250–500 kcmil	**1MPLK3**
(3) #4–300 kcmil	**1MPLK4** ①
(1) 750 kcmil	**1MPLK2** ②
Crimp lug landing pad 250–750 kcmil	**1MPSC1** ①

Wire Sizes—Neutral and Ground Lugs

Description	Wire Size, Al/Cu	Catalog Number
Neutral—125 A meter pack	#6–2/0	—
Neutral—200 A meter pack	#1/0–300 kcmil	—
Equipment ground bar—125 A meter pack	#14–#2	—
Equipment ground bar—200 A meter pack	#14–2/0	—
Optional ground bar	#6–2/0	**1MMGBK**

Notes

① This kit comes with three pads for two lines and neutral. Each pad will accept one or two crimp lugs. Cannot be used on **1MP2122R**, **RL, RC** and **RLB** EUSERC underground termination.

② This lug is not UL listed.

Each stack includes a neutral and ground bar. If an extra ground bar is needed, order **1MMGBK**.

Type CCV Tenant Main Circuit Breaker

Contents

Description	*Page*
Systems for Residential and Commercial Applications	**V1-T4-88**
Meter Packs	**V1-T4-90**
Type CCV 120/240 V Tenant Main Circuit Breaker	
Type CV 120/240 V Tenant Main Circuit Breaker	**V1-T4-96**
Meter Packs—1MP, 1MM and 3MM Main Tenant Circuit Breakers	**V1-T4-98**
Main Service Modules	**V1-T4-101**
Surge Metering	**V1-T4-115**
Group Metering Inline Current Transformer Cabinets	**V1-T4-116**
Residential Meter Stacks	**V1-T4-118**
1MP, 1MM and 3MM Main Tenant Circuit Breakers	**V1-T4-127**
Phase Balanced Stack	**V1-T4-128**
Commercial Meter Stack Modules	**V1-T4-129**
35MM, 37MM, 35SS and 37SS Main Tenant Circuit Breakers	**V1-T4-136**

Type CCV 120/240 V Tenant Main Circuit Breaker

Product Overview

Eaton offers Type CCV (10 and 22 kAIC) and Type CV (42, 65 and 100 kAIC) family of circuit breakers as the primary tenant main breakers used in most group metering applications.

Product Description

Eaton's residential products Type CCV circuit breaker is available in two-pole configurations from 100 A to 225 A in 10 and 22 kAIC ratings.

Features

- **Ratings**—120/240 Vac, two-pole, through 225 continuous amperes, calibrated at 40 °C
- **Tripping characteristics**—thermal-magnetic trip, calibrated and sealed after assembly. Indirectly heated thermal tripping bimetal elements
- **Interrupting capacity** at 120/240 Vac. Type CCV—10 kAIC rms symmetrical. Type CCVH—25 kAIC rms symmetrical
- **Handles**—trip-free with ON-TRIPPED-OFF positions. Reset past OFF is required to latch breaker contacts after tripping
- **Terminals**—standard lugs (wire connectors) suitable for copper or aluminum wire
- **Backward compatibility**—Type CCV and CCVH retains same profile and footprint as the CC and CCH breaker, allowing use in the same applications

Standards and Certifications

- Complies with UL Standard 489. Breakers are listed under UL File #E7819

UL Listed

Product Selection

Type CCV 120/240 V Tenant Main Circuit Breaker

Ampere Rating	Two-Pole Breaker Wire Size Range, Al/Cu	10 kAIC	25 kAIC
60	#4–4/0	**CCV2060X**	**CCVH2060X**
70		**CCV2070X**	**CCVH2070X**
80		**CCV2080X**	**CCVH2080X**
90		**CCV2090X**	**CCVH2090X**
100	#2–300 kcmil	**CCV2100X**	**CCVH2100X**
125		**CCV2125X**	**CCVH2125X**
150		**CCV2150X**	**CCVH2150X**
175		**CCV2175X**	**CCVH2175X**
200		**CCV2200X**	**CCVH2200X**
225		**CCV2225X**	**CCVH2225X**

Modification Codes

- X—load side terminals only

Type CV Tenant Main Circuit Breaker

Contents

Description	*Page*
Systems for Residential and Commercial Applications	**V1-T4-88**
Meter Packs	**V1-T4-90**
Type CCV 120/240 V Tenant Main Circuit Breaker	**V1-T4-95**
Type CV 120/240 V Tenant Main Circuit Breaker	**V1-T4-96**
Meter Packs—1MP, 1MM and 3MM Main Tenant Circuit Breakers	**V1-T4-98**
Main Service Modules	**V1-T4-101**
Surge Metering	**V1-T4-115**
Group Metering Inline Current Transformer Cabinets	**V1-T4-116**
Residential Meter Stacks	**V1-T4-118**
1MP, 1MM and 3MM Main Tenant Circuit Breakers	**V1-T4-127**
Phase Balanced Stack	**V1-T4-128**
Commercial Meter Stack Modules	**V1-T4-129**
35MM, 37MM, 35SS and 37SS Main Tenant Circuit Breakers	**V1-T4-136**

Type CV 120/240 V Tenant Main Circuit Breaker

Product Overview

Eaton offers Type CCV (10 and 22 kAIC) and Type CV (42, 65 and 100 kAIC) family of circuit breakers as the primary tenant main breakers used in most group metering applications.

Product Description

Eaton's residential products Type CV molded-case circuit breaker is available in two- and three-pole configurations from 60 A to 225 A in 42, 65 and 100 kAIC ratings.

Features

- **Ratings**—120/240 Vac, two- and three-pole, through 225 continuous amperes, calibrated at 40 °C
- **Tripping characteristics**—thermal-magnetic trip, calibrated and sealed after assembly. Indirectly heated thermal tripping bimetal elements; includes push-to-test button for routine preventive maintenance
- **Interrupting capacity** at 120/240 Vac
  - Type CVS—42,000 A rms symmetrical
  - Type CV—65,000 A rms symmetrical
  - Type CVH—100,000 A rms symmetrical
- **Handles**—trip-free with ON-TRIPPED-OFF positions. Reset past OFF is required to latch breaker contacts after tripping
- **Terminals**—standard lugs (wire connectors) suitable for copper or aluminum wire

Standards and Certifications

- Complies with UL Standard 489. Breakers are listed under UL File #E7819

Listed

Product Selection

Type CV Two-Pole Tenant Main Circuit Breakers

Number of Poles	Main Tenant Circuit Breaker Ampere Rating	Wire Size Range, Al/Cu	42 kAIC Catalog Number	65 kAIC Catalog Number	100 kAIC Catalog Number
2	60	#6–4/0	**CVS2060XMM**	**CV2060XMM**	**CVH2060XMM**
	70		**CVS2070XMM**	**CV2070XMM**	**CVH2070XMM**
	80		**CVS2080XMM**	**CV2080XMM**	**CVH2080XMM**
	90		**CVS2090XMM**	**CV2090XMM**	**CVH2090XMM**
	100		**CVS2100XMM**	**CV2100XMM**	**CVH2100XMM**
	125		**CVS2125XMM**	**CV2125XMM**	**CVH2125XMM**
	150		**CVS2150XMM**	**CV2150XMM**	**CVH2150XMM**
	175		**CVS2175XMM**	**CV2175XMM**	**CVH2175XMM**
	200		**CVS2200XMM**	**CV2200XMM**	**CVH2200XMM**
	225		**CVS2225XMM**	**CV2225XMM**	**CVH2225XMM**

Type CV Three-Pole Tenant Main Circuit Breakers

Number of Poles	Main Tenant Circuit Breaker Ampere Rating	Wire Size Range, Al/Cu	42 kAIC Catalog Number	65 kAIC Catalog Number	100 kAIC Catalog Number
3	60	#6–4/0	**CVS3060X**	**CV3060X**	**CVH3060X**
	70		**CVS3070X**	**CV3070X**	**CVH3070X**
	80		**CVS3080X**	**CV3080X**	**CVH3080X**
	90		**CVS3090X**	**CV3090X**	**CVH3090X**
	100		**CVS3100X**	**CV3100X**	**CVH3100X**
	125		**CVS3125X**	**CV3125X**	**CVH3125X**
	150		**CVS3150X**	**CV3150X**	**CVH3150X**
	175		**CVS3175X**	**CV3175X**	**CVH3175X**
	200		**CVS3200X**	**CV3200X**	**CVH3200X**
	225		**CVS3225X**	**CV3225X**	**CVH3225X**

Accessories

Field Installable

Description	Catalog Number
Two-pole 300 kcmil with terminal shield	**2TA225CVK**
Three-pole 300 kcmil with terminal shield	**3TA225CVK**
Replacement mounting hardware kit for 200 A 1MP, 1MM and 3MM units	**1MMCBK**

Main Tenant Circuit Breakers

Contents

Description	*Page*
Systems for Residential and Commercial Applications	**V1-T4-88**
Meter Packs	**V1-T4-90**
Type CCV 120/240 V Tenant Main Circuit Breaker	**V1-T4-95**
Type CV 120/240 V Tenant Main Circuit Breaker	**V1-T4-96**
Meter Packs—1MP, 1MM and 3MM Main Tenant Circuit Breakers	
Main Service Modules	**V1-T4-101**
Surge Metering	**V1-T4-115**
Group Metering Inline Current Transformer Cabinets	**V1-T4-116**
Residential Meter Stacks	**V1-T4-118**
1MP, 1MM and 3MM Main Tenant Circuit Breakers	**V1-T4-127**
Phase Balanced Stack	**V1-T4-128**
Commercial Meter Stack Modules	**V1-T4-129**
35MM, 37MM, 35SS and 37SS Main Tenant Circuit Breakers	**V1-T4-136**

Meter Packs—1MP, 1MM and 3MM Main Tenant Circuit Breakers

Product Description

Specific main tenant circuit breakers that are to be used in meter packs (1MP), residential meter stacks (1MM) and three-phase in single-phase out meter stacks (3MM).

Product Selection

Description	Number of Poles	Main Tenant Circuit Breaker Ampere Rating	10 kAIC Catalog Number ①	22 kAIC Catalog Number	25 kAIC Catalog Number ①②③④	42 kAIC Catalog Number ②③④	65 kAIC Catalog Number ②③④	100 kAIC Catalog Number ②③④
Plug-On Type								
Plug-on type circuit breakers used with 1MP, 1MM, and 3MM 125 A modular metering stacks	2	60	**BR260**	**BRH260**	—	**BRHH260**	**BRX260**	—
	2	70	**BR270**	**BRH270**	—	**BRHH270**	**BRX270**	—
	2	80	**BR280**	**BRH280**	—	**BRHH280**	**BRX280**	—
	2	90	**BR290**	**BRH290**	—	**BRHH290**	**BRX290**	—
	2	100	**BR2100**	**BRH2100**	—	**BRHH2100**	**BRX2100**	—
	2	110	**BR2110**	**BRH2110**	—	**BRHH2110**	**BRX2110**	—
	2	125	**BR2125**	**BRH2125**	—	**BRHH2125**	**BRX2125**	—
Bolt-On Type								
Bolt-on type circuit breakers used with 1MP, 1MM, and 3MM 200 A modular metering stacks	2	60	**CCV2060X**	—	**CCVH2060X**	**CVS2060XMM**	**CV2060XMM**	**CVH2060XMM**
	2	70	**CCV2070X**	—	**CCVH2070X**	**CVS2070XMM**	**CV2070XMM**	**CVH2070XMM**
	2	80	**CCV2080X**	—	**CCVH2080X**	**CVS2080XMM**	**CV2080XMM**	**CVH2080XMM**
	2	90	**CCV2090X**	—	**CCVH2090X**	**CVS2090XMM**	**CV2090XMM**	**CVH2090XMM**
	2	100	**CCV2100X**	—	**CCVH2100X**	**CVS2100XMM**	**CV2100XMM**	**CVH2100XMM**
	2	125	**CCV2125X**	—	**CCVH2125X**	**CVS2125XMM**	**CV2125XMM**	**CVH2125XMM**
	2	150	**CCV2150X**	—	**CCVH2150X**	**CVS2150XMM**	**CV2150XMM**	**CVH2150XMM**
	2	175	**CCV2175X**	—	**CCVH2175X**	**CVS2175XMM**	**CV2175XMM**	**CVH2175XMM**
	2	200	**CCV2200X**	—	**CCVH2200X**	**CVS2200XMM**	**CV2200XMM**	**CVH2200XMM**

Notes

① #2–300 kcmil wire size range for CCV and CCVH tenant main circuit breakers.
② "MM" suffix indicates mounting hardware kit is included as standard with tenant main breaker.
③ 1MMCBK replacement mounting hardware kit. One kit is needed per breaker. Mounting hardware kit ships standard with breaker "MM" suffix offering.
④ #6–4/0 kcmil wire size range for CVS, CV and CVH tenant main circuit breakers. If #2–300 kcmil is needed, order 2TA225CVK. One kit needed per breaker.

Dimensions and Knockouts

Approximate Dimensions in Inches (mm)

1MP, 125 Ampere Meter Packs—Aluminum and Copper Bus

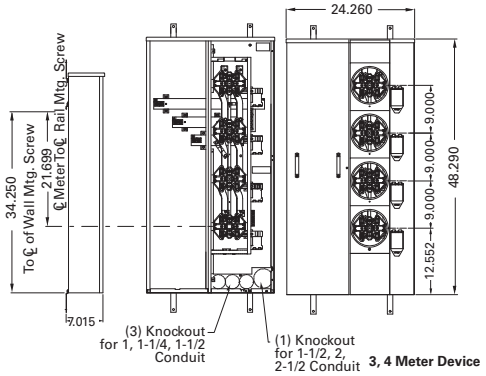

3, 4 Meter Device

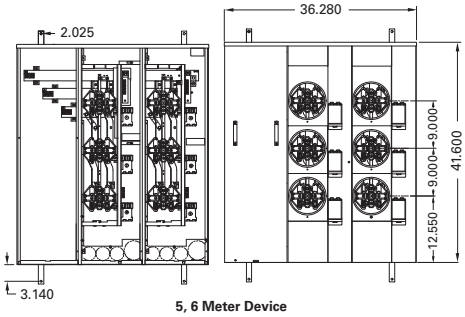

5, 6 Meter Device

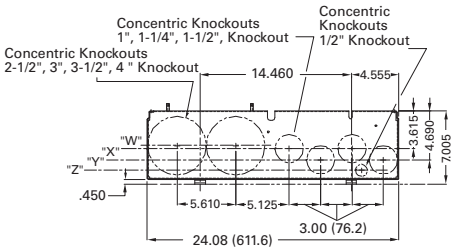

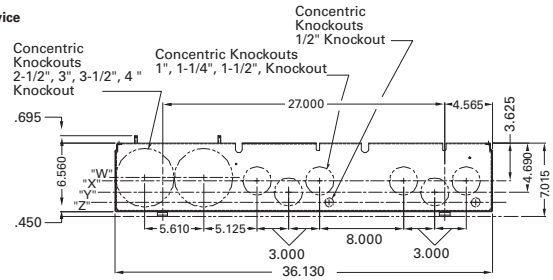

"Z" = ℄ of 1/2" Ring
"Y" = ℄ of 1-1/2" Ring
"X" = ℄ of 1-1/2" Ring
"W" = ℄ of 4" Ring

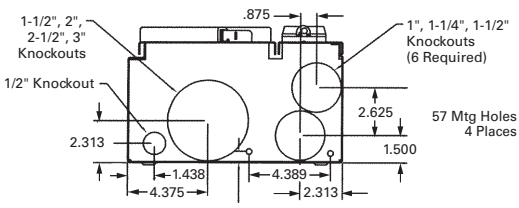

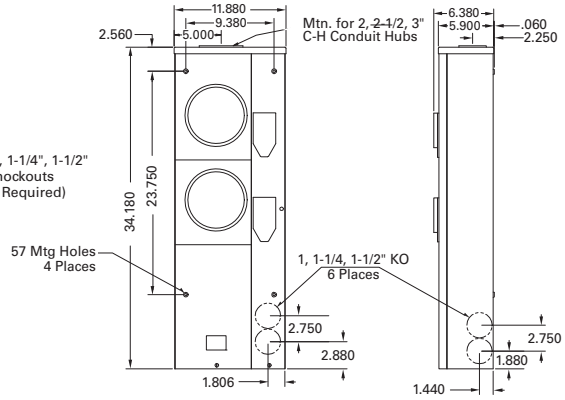

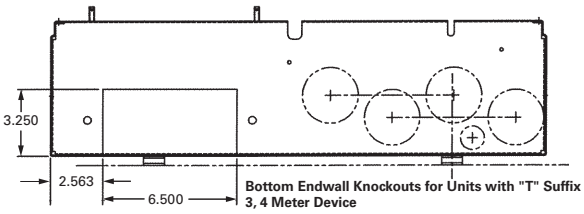

Bottom Endwall Knockouts for Units with "T" Suffix 3, 4 Meter Device

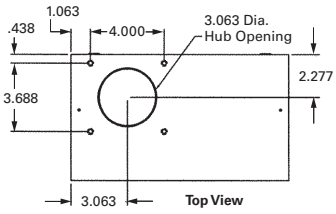

Top View

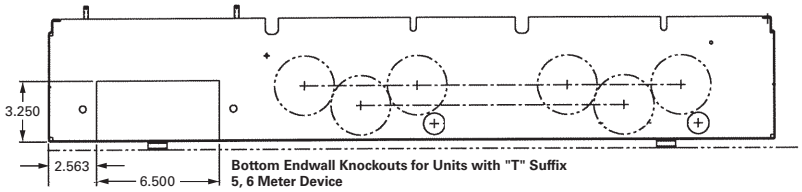

Bottom Endwall Knockouts for Units with "T" Suffix 5, 6 Meter Device

4

Approximate Dimensions in Inches (mm)

1MP, 200 Ampere Meter Packs—Aluminum and Copper Bus

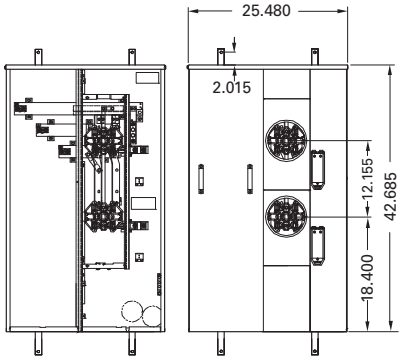

2 Meter Device

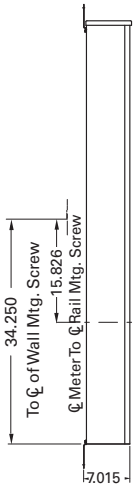

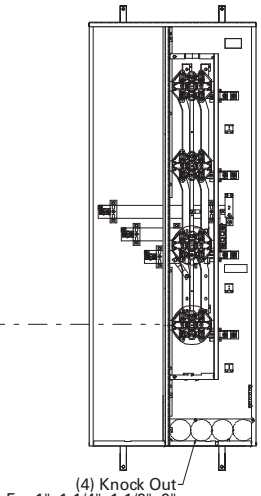

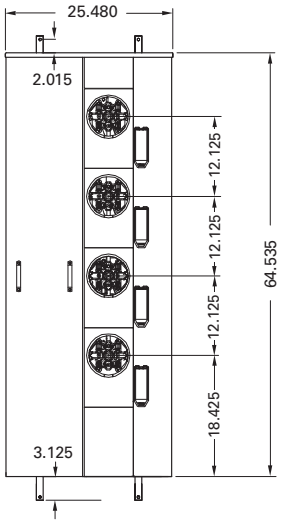

3, 4 Meter Device

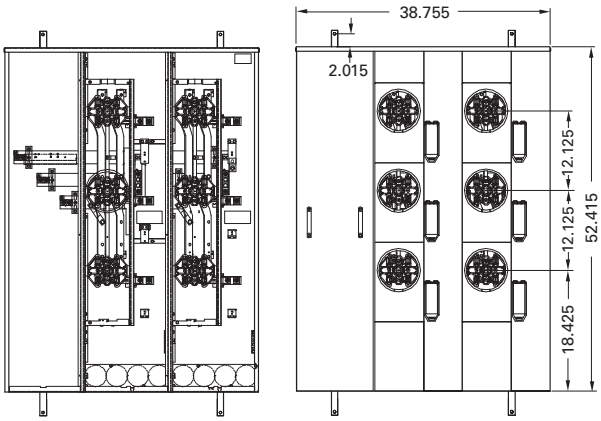

5, 6 Meter Device

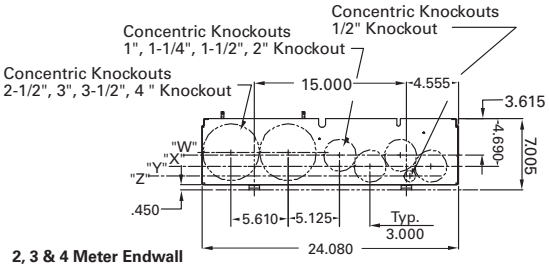

2, 3 & 4 Meter Endwall

"Z" = ℄ of 1/2" Ring
"Y" = ℄ of 1-1/2" Ring
"X" = ℄ of 1-1/2" Ring
"W" = ℄ of 4" Ring

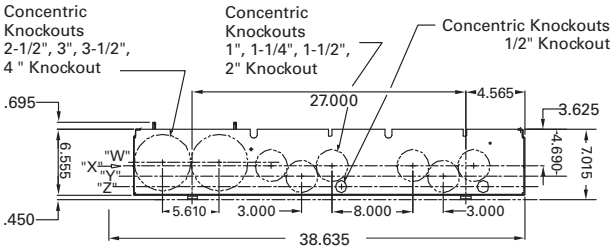

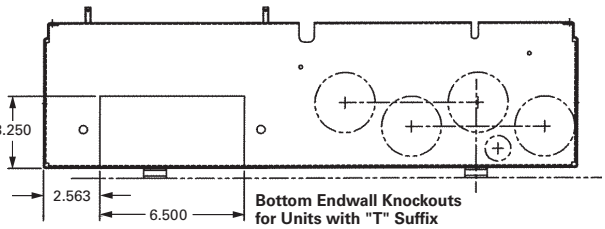

Bottom Endwall Knockouts
for Units with "T" Suffix
2, 3, 4 Meter Device

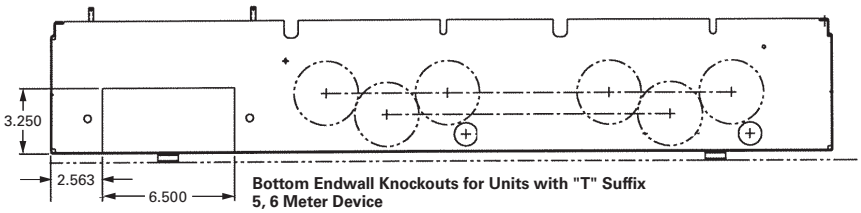

Bottom Endwall Knockouts for Units with "T" Suffix
5, 6 Meter Device

Contents

Description	Page
Systems for Residential and Commercial Applications	V1-T4-88
Meter Packs	V1-T4-90
Type CCV 120/240 V Tenant Main Circuit Breaker	V1-T4-95
Type CV 120/240 V Tenant Main Circuit Breaker	V1-T4-96
Meter Packs—1MP, 1MM and 3MM Main Tenant Circuit Breakers	V1-T4-98
Main Service Modules	
Surge Metering	V1-T4-115
Group Metering Inline Current Transformer Cabinets	V1-T4-116
Residential Meter Stacks	V1-T4-118
1MP, 1MM and 3MM Main Tenant Circuit Breakers	V1-T4-127
Phase Balanced Stack	V1-T4-128
Commercial Meter Stack Modules	V1-T4-129
35MM, 37MM, 35SS and 37SS Main Tenant Circuit Breakers	V1-T4-136

Main Service Modules

Product Description

- Main terminal box
- Main circuit breaker
- Main bolted pressure switch
- Main fusible switch
- Main fusible switch with pull box
- Underground pull box

Application Description

Main Circuit Breakers with Busway Connections

The Service Entrance Product Team announces the availability of both main fusible switch and main circuit breaker group metering mains with busway connections. This offering provides us with the ability to offer multiple tenant metering in high rise apartment buildings where riser busway is used.

Features, Benefits and Functions

Eaton's Main Service Module

- Offering: main terminal/lug compartment, main circuit breaker, main fusible switch, main bolted pressure switch, main fusible switch with pull box (meets EUSERC electrical requirements), underground pull box termination compartment without cross bus (meets EUSERC electrical requirements)
- Mechanically and electrically built for use with 1MM, 3MM, 35MM, 37MM, 35SS and 37SS modular metering stacks
- For integrated system short-circuit ratings with main devices, see series ratings on **Page V1-T4-144**
- All main service modules include both left and right horizontal bus closure plates
- Two-pole devices are applied to single-phase, three-wire, 120/240 V or 208Y/120 V systems, three-pole devices to 208Y/240 V or 120/240 V delta systems
- Single-phase mains couple to any modular metering stack (1MM, 3MM, 35MM, 37MM, 35SS and 37SS)
- Three-phase mains require three-phase bussed stacks. These modular metering stacks are 3MM, 35MM, 37MM, 35SS and 37SS
- If the ampere rating of the main service module is greater than the horizontal bus rating of the meter stack (residential or commercial), the main service module must be center fed. Examples: 1200 A Main Circuit Breaker (**1MCB1200R**) with an 800 A residential stack (**1MM512R**). 1600 A Main Terminal Box (**3MTB1600R**) with a 1200 A residential stack (**3MM212R12**)
- Most main service modules are available with aluminum or copper bus

Main Circuit Breakers with Busway Connections

- Three-phase, 400–200 A main circuit breakers
- Three-phase, 400–800 A main fusible switches
- Simple bridge joint connection
- Variety of options:
  - Right or left mounting
  - Internal ground or housing ground
- The MFS/MCB and busway connector are supplied completely assembled

Catalog Number Selection

3 MTB 400 R __ C

Phase
- **1** = Single-phase
- **3** = Three-phase

Type of Metering
- **BTB** = Main terminal box
- **MCB** = Main circuit breaker
- **BPS** = Bolted pressure switch
- **MFS** = Main fusible switch
- **UGPB** = Underground pull box
- **MTBE** = Main terminal box with utility pull box
- **MCBE** = Main circuit breaker with utility pull box

Ampere Rating
- **400 A**
- **600 A**
- **800 A**
- **1000 A**
- **1200 A**
- **1400 A**
- **1600 A**
- **2000 A**

Enclosure
- **R** = NEMA 3R

Accessories and Additional Options
- **BLK** = Box lug kit (accessory)
- **CLK** = Compression lug (accessory)
- **B** = Bottom feed
- **T** = Top feed
- **UG** = Pull box
- **Blank** = No options

Bus Material
- **C** = Copper bus
- **Blank** = Aluminum bus

When Ordering:

1. Determine catalog number of Main Service Module.
2. Determine catalog number of Meter Stack (Residential or Commercial).
3. Find quantity and catalog numbers for tenant circuit breakers (found on **Page V1-T4-127** or **V1-T4-137**). Order one breaker per socket.
4. If any accessories are needed, order from **Pages V1-T4-138** and **V1-T4-139**.

Product Selection

Main Terminal Box

- Phase and neutral lugs are included
- Top or bottom feed:
  - For top feed, use Myer type hub
- Indoor or outdoor
- Terminal box UL listed short-circuit rating is the least AIC rating of any installed main tenant breaker—to a maximum of 100,000 rms symmetrical amperes

Main Terminal Box

Main Terminal Box

Ampere Rating	Line Side Lug and Wire Sizes—Included	System Voltage 120/240 Vac Single-Phase, Three-Wire Catalog Number	120/208 Vac Three-Phase, Four-Wire Catalog Number
Aluminum Bus (Standard Offering)			
400	(1) #6–600 or (2) 1/0–250 kcmil ②	Use three-phase	**3MTB400R**
600	(2) 250–500 kcmil ③	Use three-phase	**3MTB600R**
800	(4) 250–500 kcmil ④⑤	**1MTB800R**	**3MTB800R**
1200 ①	(4) 250–500 kcmil ⑤⑥	**1MTB1200R**	**3MTB1200R**
Aluminum Bus (EUSERC)			
400	Crimp lug landing pads (no lugs included)	**1MTBE400R** ⑦	**3MTBE400R** ⑦
800	Crimp lug landing pads (no lugs included)	**1MTBE800R** ⑦	**3MTBE800R** ⑦
Copper Bus (Premium Offering)			
400	(1) #6–600 or (2) 1/0–250 kcmil ②	Use three-phase	**3MTB400RC**
600	(2) 250–500 kcmil ③	Use three-phase	**3MTB600RC**
800	(4) 250–500 kcmil ④⑤	**1MTB800RC**	**3MTB800RC**
1200 ①	(4) 250–500 kcmil ⑤⑥	**1MTB1200RC**	**3MTB1200RC**
1600 ①	(6) 500 kcmil ⑧	**1MTB1600RC**	**3MTB1600RC**

Main Terminal Box Riser Panel

Eaton's Main Terminal Box Riser Panel is a main terminal box with offset lugs on each phase to allow riser cables to pass through the main service module.

These panels are used in the construction of assisted living homes, dormitories, public housing complexes and apartments.

Main Terminal Box Riser Panel

Ampere Rating	Line and Load Side Lug and Wire Sizes Included	System Voltage 120/240 Vac Single-Phase, Three-Wire Catalog Number	120/208 Vac Three-Phase, Four-Wire Catalog Number
Copper Bus (Standard Offering)			
1200	#2 AWG–750 kcmil ①⑨	Use three-phase	**3MTB1200RCRIS**
1600	#2 AWG–750 kcmil ①⑨	Use three-phase	**3MTB1600RCRIS**

Notes

① 1200 A main devices must be center fed when installing 800 A residential meter stacks.
1600 A main devices must be center fed when installing 800–1200 A residential and commercial meter stacks.

② For 400 A units, to obtain (4) 750 kcmil cables per phase—order quantity 4 **1MPLK2**. Kit contains one lug.

③ For compression lug landing kits for 600 A units, order **3MTB600CLK**. Kit includes lug landings for three phases and neutral.

④ For 800 A units, to obtain (4) 1/0–300 kcmil or (2) 1/0–750 kcmil cables per phase—order catalog number **3MTB800BLK**, one lug kit per main terminal box ordered (neutral and ground included in kit).

⑤ For 800 A and 1200 A units, for compression lug landing kits, order **3MTB1200CLK**. Kit includes lug landings for three-phase and neutral.

⑥ For 1200 A units, to obtain (6) 1/0–300 kcmil or (3) 750 kcmil cables per phase—order catalog number **3MTB1200BLK**, one lug kit per main terminal box ordered (neutral and ground included in kit).

⑦ Meets EUSERC electrical requirements and eliminates the need to add additional pull box section. Reference drawing EUSERC DWG-343.

⑧ For 1600 A units, to obtain (4) 750 kcmil cables per phase—order catalog number **3MTB1600BLK**, one lug kit per main terminal box ordered. For a 1600 A compression lug landing kit, order catalog number **3MTB1600CLK**.

⑨ Quantity (10) lugs per phase—quantity (5) lugs incoming and quantity (5) lugs outgoing per phase.

Main Circuit Breaker

- Phase and neutral lugs included. If additional neutral lugs are needed, order 1MCB1200NLK for (3) 1/0–750 or (6) 1/0–300 kcmil
- For shunt trip mains, order the field-installable shunt trip kit in this volume, Tab 1, section 1.1
- For overhead feed, use Myer type hub. Verify local utility approval
- For compression lugs on 400, 600, 800, 1000 and 1200 A units, add CL to the end of the part number (includes copper lug pads for lines and neutral)
- 1200 A or greater main devices must be center fed when installing 800 A residential meter stacks
- 1400, 1600 and 2000 A main devices must be center fed when installing 800 and 1200 A residential and commercial meter stacks

Main Circuit Breaker

Main Circuit Breaker

Main Ampere Rating	Main Circuit Breaker Type	Feed	kAIC	Line Side Lug and Wire Sizes (Lugs Included with Main Breaker) ①	System Voltage 120/240 Vac Single-Phase, Three-Wire Catalog Number	System Voltage 120/208 Vac Three-Phase, Four-Wire Catalog Number
Aluminum Bus (Standard Offering) ②						
250	KD	Bottom/top	65	(2) 3/0–250 kcmil or (1) 2/0–500 kcmil	**1MCB250R**	**3MCB250R**
250	HKD	Bottom/top	100	(2) 3/0–250 kcmil or (1) 2/0–500 kcmil	**1MHCB250R**	**3MHCB250R**
300	KD	Bottom/top	65	(2) 3/0–250 kcmil or (1) 2/0–500 kcmil	**1MCB300R**	**3MCB300R**
300	HKD	Bottom/top	100	(2) 3/0–250 kcmil or (1) 2/0–500 kcmil	**1MHCB300R**	**3MHCB300R**
350	KD	Bottom/top	65	(2) 3/0–250 kcmil or (1) 2/0–500 kcmil	**1MCB350R**	**3MCB350R**
350	HKD	Bottom/top	100	(2) 3/0–250 kcmil or (1) 2/0–500 kcmil	**1MHCB350R**	**3MHCB350R**
400	KD	Bottom/top	65	(2) 3/0–250 kcmil or (1) 2/0–500 kcmil	**1MCB400R** ③	**3MCB400R** ③
400	HKD	Bottom/top	100	(2) 3/0–250 kcmil or (1) 2/0–500 kcmil	**1MHCB400R** ③	**3MHCB400R** ③
500	LD	Bottom/top	65	(2) 400–500 kcmil	**1MCB500R**	**3MCB500R**
500	HLD	Bottom/top	100	(2) 400–500 kcmil	**1MHCB500R**	**3MHCB500R**
600	LD	Bottom/top	65	(2) 400–500 kcmil	**1MCB600R** ③	**3MCB600R** ③
600	HLD	Bottom/top	100	(2) 400–500 kcmil	**1MHCB600R** ③	**3MHCB600R** ③
700	HMDL	Bottom/top	100	(3) 3/0–400 kcmil	**1MHCB700R**	**3MHCB700R**
700	MDL	Bottom/top	65	(3) 3/0–400 kcmil	**1MCB700R**	**3MCB700R**
800	MDL	Bottom/top	65	(3) 3/0–400 kcmil	**1MCB800R** ③	**3MCB800R** ③
800	MDL	Bottom/top	65	(2) 500–750 kcmil	**1MCB800R750**	**3MCB800R750**
800	HMDL	Bottom/top	100	(3) 3/0–400 kcmil	**1MHCB800R** ③	**3MHCB800R** ③
900	NGS	Bottom/top	65	(4) 4/0–500 kcmil ④	**1MCB900R** ⑤	**3MCB900R** ⑤
900	NGH	Bottom/top	100	(4) 4/0–500 kcmil ④	**1MHCB900R** ⑤	**3MHCB900R** ⑤
1000	NGS	Bottom/top	65	(4) 4/0–500 kcmil ④	**1MCB1000R** ③⑤	**3MCB1000R** ③⑤
1000	NGS	Bottom/top	65	(2) 500–750 kcmil	**1MCB1000R750**	**3MCB1000R750**
1000	NGH	Bottom/top	100	(4) 4/0–500 kcmil ④	**1MHCB1000R** ③⑤	**3MHCB1000R** ③⑤
1200	NGS	Bottom	65	(4) 4/0–500 kcmil ④	**1MCB1200R** ③⑤	**3MCB1200R** ③⑤
1200	NGH	Bottom	100	(4) 4/0–500 kcmil ④	**1MHCB1200R** ③⑤	**3MHCB1200R** ③⑤
1200	NGS	Bottom	65	(2) 500–750 kcmil	Use three-phase	**3MCB1200R750**

Notes

① If additional neutral lugs are needed, order **1MCB1200NLK** [(3) 1/0–750 kcmil or (6) 1/0–300 kcmil].
② Reference drawing EUSERC DWG-315.
③ Add CL to end of catalog number for compression lug pads (includes lug pads for lines and neutral).
④ If (3) 500–750 kcmil are needed, order **TA1201NB1**. Order one kit per pole.
⑤ Main devices with a rating greater than 800 A can be used with 800 A residential modular stacks, but only as a center fed main.

Main Circuit Breaker

Main Circuit Breaker

Main Circuit Breaker, continued

Main Ampere Rating	Main Circuit Breaker Type	Feed	kAIC	Line Side Lug and Wire Sizes (Lugs Included with Main Breaker) ①	System Voltage 120/240 Vac Single-Phase, Three-Wire Catalog Number	120/208 Vac Three-Phase, Four-Wire Catalog Number
Aluminum Bus (EUSERC) ②						
300	KD	Bottom/top	65	Crimp lug landing pads (no lugs included)	**1MCBE300R**	**3MCBE300R**
350	KD	Bottom/top	65	Crimp lug landing pads (no lugs included)	**1MCBE350R**	**3MCBE350R**
400	KD	Bottom/top	65	Crimp lug landing pads (no lugs included)	**1MCBE400R**	**3MCBE400R**
400	HKD	Bottom/top	100	Crimp lug landing pads (no lugs included)	**1MHCBE400R**	**3MHCBE400R**
500	LD	Bottom/top	65	Crimp lug landing pads (no lugs included)	**1MCBE500R**	**3MCBE500R**
600	LD	Bottom/top	65	Crimp lug landing pads (no lugs included)	**1MCBE600R**	**3MCBE600R**
600	HLD	Bottom/top	100	Crimp lug landing pads (no lugs included)	**1MHCBE600R**	**3MHCBE600R**
800	MDL	Bottom/top	65	Crimp lug landing pads (no lugs included)	**1MCBE800R**	**3MCBE800R**
800	HMDL	Bottom/top	100	Crimp lug landing pads (no lugs included)	**1MHCBE800R**	**3MHCBE800R**
1000	NGS	Bottom/top	65	Crimp lug landing pads (no lugs included)	**1MCBE1000R**	**3MCBE1000R**
1200	NGS	Bottom	65	Crimp lug landing pads (no lugs included)	**1MCBE1200R**	**3MCBE1200R**
1200	NGH	Bottom	100	Crimp lug landing pads (no lugs included)	**1MHCBE1200R**	**3MHCBE1200R**
Copper Bus (Premium Offering)						
400	KD	Bottom/top	65	(2) 3/0–250 kcmil or (1) 2/0-500 kcmil	**1MCB400RC** ③	**3MCB400RC** ③
400	HKD	Bottom/top	100	2/0–500 kcmil	**1MHCB400RC** ③	**3MHCB400RC** ③
600	LD	Bottom/top	65	(2) 300–500 kcmil	**1MCB600RC** ③	**3MCB600RC** ③
600	HLD	Bottom/top	100	(2) 300–500 kcmil	**1MHCB600RC** ③	**3MHCB600RC** ③
800	MDL	Bottom/top	65	(3) 3/0–400 kcmil	**1MCB800RC** ③	**3MCB800RC** ③
800	HMDL	Bottom/top	100	(3) 3/0–400 kcmil	**1MHCB800RC** ③	**3MHCB800RC** ③
900	NGS	Bottom/top	65	(4) 4/0–500 kcmil ④	**1MCB900RC** ⑤	**3MCB900RC** ⑤
900	NGH	Bottom/top	100	(4) 4/0–500 kcmil ④	**1MHCB900RC** ⑤	**3MHCB900RC** ⑤
1000	NGS	Bottom/top	65	(2) 500–750 kcmil	**1MCB1000R750C**	**3MCB1000R750C**
1000	NGS	Bottom/top	65	(4) 4/0–500 kcmil ④	**1MCB1000RC** ③⑤	**3MCB1000RC** ③⑤
1000	NGH	Bottom/top	100	(4) 4/0–500 kcmil ④	**1MHCB1000RC** ③⑤	**3MHCB1000RC** ③⑤
1200	NGS	Bottom	65	(2) 500–750 kcmil	Use three-phase	**3MCB1200R750C**
1200	NGS	Bottom	65	(4) 4/0–500 kcmil ④	**1MCB1200RC** ③⑤	**3MCB1200RC** ③⑤
1200	NGH	Bottom	100	(4) 4/0–500 kcmil ④	**1MHCB1200RC** ③⑤	**3MHCB1200RC** ③⑤
1400	RGH	Bottom	100	(4) 500–1000 kcmil ⑥	**1MCB1400RBC** ⑤⑦	**3MCB1400RBC** ⑤⑦
1400	RGH	Top	100	(4) 500–1000 kcmil ⑥	**1MCB1400RT** ⑧	**3MCB1400RT** ⑧
1600	RGH	Bottom	100	(4) 500–1000 kcmil ⑥	**1MCB1600RBC** ⑦⑧	**3MCB1600RBC** ⑦⑧
1600	RGH	Top	100	(4) 500–1000 kcmil ⑥	**1MCB1600RT** ⑧	**3MCB1600RT** ⑧
2000	RGH	Bottom	100	(6) #2–600 kcmil	**1MCB2000RBC** ⑦⑨	**3MCB2000RBC** ⑦⑨
2000	RGH	Top	100	(6) #2–600 kcmil	**1MCB2000RT** ⑨	**3MCB2000RT** ⑨
Copper Bus (EUSERC) ②						
1000	NGH	Bottom	100	Crimp lug landing pads (no lugs included)	**1MCBE1000RC**	**3MCBE1000RC**
1200	NGS	Bottom	65	Crimp lug landing pads (no lugs included)	**1MCBE1200RC**	**3MCBE1200RC**
1200	NGH	Bottom	100	Crimp lug landing pads (no lugs included)	**1MHCBE1200RC**	**3MHCBE1200RC**

Notes

① If additional neutral lugs are needed, order **1MCB1200NLK** [(3) 1/0–750 kcmil or (6) 1/0–300 kcmil].
② Reference drawing EUSERC DWG-315.
③ Add CL to end of catalog number for compression lug pads (includes lug pads for lines and neutral).
④ If (3) 500–750 kcmil are needed, order **TA1201NB1**. Order one kit per pole.
⑤ Main devices with a rating greater than 800 A can be used with 800 A residential modular stacks but only as a center fed main.
⑥ If (6) #2–600 kcmil lugs are needed, order **TA2000RD**. Catalog number includes terminals and hardware for three poles. If neutral is needed, order **TA2000N**.
⑦ Copper bus.
⑧ Main devices with a rating greater than 1200 A can be used with residential and commercial modular metering stacks but only as a center fed main.
⑨ Only to be used in center feed applications with 1200 A meter stacks. Not to be used with 800 A stacks.

Main Fusible Switches

- Fuses not included
- Main lugs and neutral included with device
- 100 kAIC rating on switches with Class T fuses installed. If converting to Class H, the kAIC rating is 10 and if converted to Class R, the kAIC rating is 200

Note: This is the fuse rating, switch still rated at 100 kAIC.

- 800 A top and bottom fed units are supplied with Class T fuse clips as standard. The Class T fuse clips are field convertible to Class L by repositioning. No kit is needed
- Barrier kits available for 400–800 A fusible switches: Bottom feed—**3MFSBBK**, Top feed—**3MFSTBK**

Main Fusible Switches

Main Fusible Switches

Ampere Rating	Feed	Class Fuse Clips (Fuses Not Included)	Line Side Box Lugs and Wire Sizes (Included with Switch)	System Voltage 120/240 Vac Single-Phase, Three-Wire Catalog Number	120/208 Vac Three-Phase, Four-Wire Catalog Number
Aluminum Bus (Standard Offering)					
400	Bottom	T ①	(2) 1/0–300 kcmil or (1) 750 kcmil ④⑤	**1MFS400RB**	**3MFS400RB**
400	Top	T ①	(2) 1/0–300 kcmil or (1) 750 kcmil ⑤⑥	**1MFS400RT**	**3MFS400RT**
600	Bottom	T ②	(2) #2–600 kcmil ④⑤	**1MFS600RB**	**3MFS600RB**
600	Top	T ②	(2) #2–600 kcmil ⑤⑥	**1MFS600RT**	**3MFS600RT**
800	Bottom	T, L ③	(4) 3/0–750 kcmil ④	**1MFS800RB**	**3MFS800RB**
800	Top	T, L ③	(4) 3/0–750 kcmil ⑥	**1MFS800RT**	**3MFS800RT**
1200	Bottom	T, L ③	(4) #2–600 kcmil ⑦	**1MFS1200RB**	**3MFS1200RB**
Copper Bus (Premium Offering)					
400	Bottom	T ①	(2) 1/0–300 kcmil or (1) 750 kcmil ④⑤	**1MFS400RBC**	**3MFS400RBC**
400	Top	T ①	(2) 1/0–300 kcmil or (1) 750 kcmil ⑤⑥	**1MFS400RTC**	**3MFS400RTC**
600	Bottom	T ②	(2) #2–600 kcmil ④⑤	**1MFS600RBC**	**3MFS600RBC**
600	Top	T ②	(2) #2–600 kcmil ⑤⑥	**1MFS600RTC**	**3MFS600RTC**
800	Bottom	T, L ③	(4) 3/0–750 kcmil ④	**1MFS800RBC**	**3MFS800RBC**
800	Top	T, L ③	(4) 3/0–750 kcmil ⑥	**1MFS800RTC**	**3MFS800RTC**
1200	Bottom	T, L ③	(4) #2–600 kcmil ⑦	**1MFS1200RBC**	**3MFS1200RBC**

Notes

① If Class H fuse clips are needed, use catalog number **WCG3HK400** (order (1) per phase).
If Class R fuse clips are needed, order catalog number **DS56FK** in addition to **WCG3HK400**.
In order to go from T to R, the device must first be converted to H.
All kits are field installable and each **DS56FK** kit will convert three poles.

② If Class H fuse clips are needed, use catalog number **WCG3HK600** (order (1) per phase).
If Class R fuse clips are needed, order catalog number **DS66FK** in addition to **WCG3HK600**.
In order to go from T to R, the device must first be converted to H.
All kits are field installable and each **DS66FK** kit will convert three poles.

③ Class T fuse clips provided are field convertible to Class L by repositioning. No kit is needed.

④ If compression lugs are being used, order **3MFS800CLK**. This compression lug kit includes four pads (three poles and neutral).

⑤ 1MFS600BLK (4) 3/0–750 kcmil/phase (one kit/phase and one kit/neutral).

⑥ If compression lugs are being used, order **3MFS800CLKT**. This compression lug kit includes four pads (three poles and neutral).

⑦ IMFS1200LK (3) 750 kcmil/phase (one kit/phase). IMFS1200LKN (3) 750 kcmil (neutral).

Main Fusible Switch with Utility Pull Box

- Fuses not included
- Includes lug landing pads on line side and neutral
- Spacer kit 3MMBSK required when stacks are mounted on right-hand side in EUSERC areas
- 100 kAIC rating on switches with Class T fuse clips installed

Main Fusible Switch with Utility Pull Box

Main Fusible Switch with Utility Pull Box ①

Ampere Rating	Feed	Class Fuse Clips (Fuses Not Included)	Line Side Box Lugs and Wire Sizes (Included with Switch)	System Voltage 120/240 Vac Single-Phase, Three-Wire Catalog Number	System Voltage 120/208 Vac Three-Phase, Four-Wire Catalog Number
Aluminum Bus (Standard Offering)					
400	Bottom	T	②	**1MFS400RUG**	**3MFS400RUG**
600	Bottom	T	②	**1MFS600RUG**	**3MFS600RUG**
800	Bottom	T, L	②	**1MFS800RUG**	**3MFS800RUG**
1200	Bottom	T	②	**1MFS1200RUG**	**3MFS1200RUG**
Copper Bus (Premium Offering)					
400	Bottom	T	②	**1MFS400RUGC**	**3MFS400RUGC**
600	Bottom	T	②	**1MFS600RUGC**	**3MFS600RUGC**
800	Bottom	T, L	②	**1MFS800RUGC**	**3MFS800RUGC**
1200	Bottom	T	②	**1MFS1200RUGC**	**3MFS1200RUGC**

Utility Pull Box

- Includes lug landing pads on line side and neutral
- Requires cable connection in field to main device; does not include horizontal cross bus

Pull Box ③

Ampere Rating	Feed	Line Side Lug Information	Load Side Lug Information for Cable Connection to Main Disconnect	System Voltage 120/240 Vac Single-Phase, Three-Wire Catalog Number	System Voltage 120/208 Vac Three-Phase, Four-Wire Catalog Number
Aluminum Bus (Standard Offering)					
400	Bottom	②	1/0–750 kcmil or (2) 1/0–300 kcmil	**1UGPB400R**	**3UGPB400R**
800	Bottom	②	(2) 1/0–750 kcmil or (4) 1/0–300 kcmil	**1UGPB800R**	**3UGPB800R**
1200	Bottom	②	(4) #2–600 kcmil	**1UGPB1200R**	**3UGPB1200R**
Copper Bus (Premium Offering)					
400	Bottom	②	1/0–750 kcmil or (2) 1/0–300 kcmil	**1UGPB400RC**	**3UGPB400RC**
800	Bottom	②	(2) 1/0–750 kcmil or (4) 1/0–300 kcmil	**1UGPB800RC**	**3UGPB800RC**
1200	Bottom	②	(4) #2–600 kcmil	**1UGPB1200RC**	**3UGPB1200RC**

Notes

① Reference drawing EUSERC DWG-315.
② Pull box section includes landing studs for line side compression lugs. Wire sizes refer to load side connection.
③ Reference drawing EUSERC DWG-343.

Main Bolted Pressure Contact Switches

- Add suffix ST to catalog number for shunt trip
- Fuses not included
- 100 kAIC rating on switches with Class L fuses installed

Main Bolted Pressure Contact Switches

Ampere Rating	Feed	Class Fuse Clips (Fuses Not Included)	System Voltage 120/240 Vac Single-Phase, Three-Wire Catalog Number	120/208 Vac Three-Phase, Four-Wire Catalog Number	Line Side Box Lugs and Wire Sizes (Included)
Copper Bus					
1200	Bottom	L	**1BPS1200RB**	**3BPS1200RB**	(4) #4–600 kcmil
1200	Top	L	**1BPS1200RT**	**3BPS1200RT**	(4) #4–600 kcmil
1600	Bottom	L	Use three-phase	**3BPS1600RB**	(6) #4–600 kcmil
1600	Top	L	Use three-phase	**3BPS1600RT**	(6) #4–600 kcmil
2000	Bottom	L	Use three-phase	**3BPS2000RB**	(8) #4–600 kcmil
2000	Top	L	Use three-phase	**3BPS2000RT**	(8) #4–600 kcmil

Main Circuit Breaker with Busway Connection

Verify proper left/right–bus/main phasing.

Note: "Right" means that the bus duct is to the right of the main and "left" means that the bus duct is to the left of the main. (See Dimension/Layout section for clarification.)

Using this information, select the correct main device catalog number per the selection chart.

Main Circuit Breaker with Busway Connection

Ampere Rating	Feed	System Voltage 120/208 Vac Three-Phase, Four-Wire Catalog Number	Internal Ground or Housing Ground	Standard T or TO Opposite Phasing	Right or Left Side
400	Bottom	**3MFS400BCRGTO**	Internal	TO	Right
600	Bottom	**3MFS600BCRGTO**	Internal	TO	Right
800	Bottom	**3MFS800BCRGTO**	Internal	TO	Right
400	Bottom	**3MFS400BCLGTO**	Internal	TO	Left
600	Bottom	**3MFS600BCLGTO**	Internal	TO	Left
800	Bottom	**3MFS800BCLGTO**	Internal	TO	Left
400	Bottom	**3MFS400BCRGT**	Internal	T	Right
600	Bottom	**3MFS600BCRGT**	Internal	T	Right
800	Bottom	**3MFS800BCRGT**	Internal	T	Right
400	Bottom	**3MFS400BCLGT**	Internal	T	Left
600	Bottom	**3MFS600BCLGT**	Internal	T	Left
800	Bottom	**3MFS800BCLGT**	Internal	T	Left
400	Bottom	**3MFS400BCRNTO**	Housing	TO	Right
600	Bottom	**3MFS600BCRNTO**	Housing	TO	Right
800	Bottom	**3MFS800BCRNTO**	Housing	TO	Right
400	Bottom	**3MFS400BCLNTO**	Housing	TO	Left
600	Bottom	**3MFS600BCLNTO**	Housing	TO	Left
800	Bottom	**3MFS800BCLNTO**	Housing	TO	Left
400	Bottom	**3MFS400BCRNT**	Housing	T	Right
600	Bottom	**3MFS600BCRNT**	Housing	T	Right
800	Bottom	**3MFS800BCRNT**	Housing	T	Right
400	Bottom	**3MFS400BCLNT**	Housing	T	Left
600	Bottom	**3MFS600BCLNT**	Housing	T	Left
800	Bottom	**3MFS800BCLNT**	Housing	T	Left
400	Bottom	**3MCB400BCRGT**	Internal	T	Right
400	Bottom	**3HMCB400BCRGT**	Internal	T	Right
600	Bottom	**3MCB600BCRGT**	Internal	T	Right
600	Bottom	**3HMCB600BCRGT**	Internal	T	Right
800	Bottom	**3MCB800BCRGT**	Internal	T	Right
800	Bottom	**3HMCB800BCRGT**	Internal	T	Right
1000	Bottom	**3MCB1000BCRGT**	Internal	T	Right
1000	Bottom	**3HMCB1000BCRGT**	Internal	T	Right
1200	Bottom	**3MCB1200BCRGT**	Internal	T	Right
1200	Bottom	**3HMCB1200BCRGT**	Internal	T	Right
400	Bottom	**3MCB400BCLGT**	Internal	T	Left
400	Bottom	**3HMCB400BCLGT**	Internal	T	Left
600	Bottom	**3MCB600BCLGT**	Internal	T	Left
600	Bottom	**3HMCB600BCLGT**	Internal	T	Left
800	Bottom	**3MCB800BCLGT**	Internal	T	Left
800	Bottom	**3HMCB800BCLGT**	Internal	T	Left
1000	Bottom	**3MCB1000BCLGT**	Internal	T	Left
1000	Bottom	**3HMCB1000BCLGT**	Internal	T	Left
1200	Bottom	**3MCB1200BCLGT**	Internal	T	Left
1200	Bottom	**3HMCB1200BCLGT**	Internal	T	Left
400	Bottom	**3MCB400BCRNT**	Housing	T	Right
400	Bottom	**3HMCB400BCRNT**	Housing	T	Right
600	Bottom	**3MCB600BCRNT**	Housing	T	Right
600	Bottom	**3HMCB600BCRNT**	Housing	T	Right
800	Bottom	**3MCB800BCRNT**	Housing	T	Right
800	Bottom	**3HMCB800BCRNT**	Housing	T	Right
1000	Bottom	**3MBC1000BCRNT**	Housing	T	Right
1000	Bottom	**3HMBC1000BCRNT**	Housing	T	Right

Main Circuit Breaker with Busway Connection, continued

Ampere Rating	Feed	System Voltage 120/208 Vac Three-Phase, Four-Wire Catalog Number	Internal Ground or Housing Ground	Standard T or TO Opposite Phasing	Right or Left Side
1200	Bottom	**3MCB1200BCRNT**	Housing	T	Right
1200	Bottom	**3HMCB1200BCRNT**	Housing	T	Right
400	Bottom	**3MCB400BCLNT**	Housing	T	Left
400	Bottom	**3HMCB400BCLNT**	Housing	T	Left
600	Bottom	**3MCB600BCLNT**	Housing	T	Left
600	Bottom	**3HMCB600BCLNT**	Housing	T	Left
800	Bottom	**3MCB800BCLNT**	Housing	T	Left
800	Bottom	**3HMCB800BCLNT**	Housing	T	Left
1000	Bottom	**3MCB1000BCLNT**	Housing	T	Left
1000	Bottom	**3HMCB1000BCLNT**	Housing	T	Left
1200	Bottom	**3MCB1200BCLNT**	Housing	T	Left
1200	Bottom	**3HMCB1200BCLNT**	Housing	T	Left
400	Bottom	**3MCB400BCRGTO**	Internal	TO	Right
400	Bottom	**3HMCB400BCRGTO**	Internal	TO	Right
600	Bottom	**3MCB600BCRGTO**	Internal	TO	Right
600	Bottom	**3HMCB600BCRGTO**	Internal	TO	Right
800	Bottom	**3MCB800BCRGTO**	Internal	TO	Right
800	Bottom	**3HMCB800BCRGTO**	Internal	TO	Right
1000	Bottom	**3MCB1000BCRGTO**	Internal	TO	Right
1000	Bottom	**3HMCB1000BCRGTO**	Internal	TO	Right
1200	Bottom	**3MCB1200BCRGTO**	Internal	TO	Right
1200	Bottom	**3HMCB1200BCRGTO**	Internal	TO	Right
400	Bottom	**3MCB400BCLGTO**	Internal	TO	Left
400	Bottom	**3HMCB400BCLGTO**	Internal	TO	Left
600	Bottom	**3MCB600BCLGTO**	Internal	TO	Left
600	Bottom	**3HMCB600BCLGTO**	Internal	TO	Left
800	Bottom	**3MCB800BCLGTO**	Internal	TO	Left
800	Bottom	**3HMCB800BCLGTO**	Internal	TO	Left
1000	Bottom	**3MCB1000BCLGTO**	Internal	TO	Left
1000	Bottom	**3HMCB1000BCLGTO**	Internal	TO	Left
1200	Bottom	**3MCB1200BCLGTO**	Internal	TO	Left
1200	Bottom	**3HMCB1200BCLGTO**	Internal	TO	Left
400	Bottom	**3MCB400BCRNTO**	Housing	TO	Right
400	Bottom	**3HMCB400BCRNTO**	Housing	TO	Right
600	Bottom	**3MCB600BCRNTO**	Housing	TO	Right
600	Bottom	**3HMCB600BCRNTO**	Housing	TO	Right
800	Bottom	**3MCB800BCRNTO**	Housing	TO	Right
800	Bottom	**3HMCB800BCRNTO**	Housing	TO	Right
1000	Bottom	**3MCB1000BCRNTO**	Housing	TO	Right
1000	Bottom	**3HMCB1000BCRNTO**	Housing	TO	Right
1200	Bottom	**3MCB1200BCRNTO**	Housing	TO	Right
1200	Bottom	**3HMCB1200BCRNTO**	Housing	TO	Right
400	Bottom	**3MCB400BCLNTO**	Housing	TO	Left
400	Bottom	**3HMCB400BCLNTO**	Housing	TO	Left
600	Bottom	**3MCB600BCLNTO**	Housing	TO	Left
600	Bottom	**3HMCB600BCLNTO**	Housing	TO	Left
800	Bottom	**3HMCB800BCLNTO**	Housing	TO	Left
800	Bottom	**3HMCB800BCLNTO**	Housing	TO	Left
1000	Bottom	**3MCB1000BCLNTO**	Housing	TO	Left
1000	Bottom	**3HMCB1000BCLNTO**	Housing	TO	Left
1200	Bottom	**3MCB1200BCLNTO**	Housing	TO	Left
1200	Bottom	**3HMCB1200BCLNTO**	Housing	TO	Left

Dimensions

Approximate Dimensions in Inches (mm)

Dimensions (Not to be Used for Construction Purposes)

Main Device	Width A	Height B	Depth C	Mounting D	E	Center Line of Wall Mounting Bracket F	Knockouts in Bottom Endwalls Except No KOs for Top Feed Switch or Bolted Pressure Switch Conduit Diameter Inches	mm	KO Dwg.
Terminal Box									
400 and 600 A	13.50 (342.9)	48.75 (1238.3)	7.00 (177.8)	—	54.00 (1371.6)	30.63 (777.9)	(1) 2.50, 3.00, 3.50, 4.00 (1) 0.50	(1) 63.5, 76.2, 88.9, 101.6 (1) 12.7	1
800 and 1200 A	20.00 (508.0)	47.63 (1209.8)	11.75 (298.5)	12.00 (304.8)	51.50 (1308.1)	30.63 (777.9)	(2) 0.50, 0.75, 1.00 (4) 2.00, 2.50, 3.00, 3.50, 4.00	(2) 12.1, 19.1, 25.4 (4) 50.8, 63.5, 76.2, 88.9, 101.6	2
1600 A	32.88 (835.2)	60.13 (1527.3)	11.44 (290.6)	16.00 (406.4)	64.13 (1628.9)	38.59 (980.2)	(1) 0.75, 1.00, 1.25, 1.50 (5) 3.00, 3.50, 4.00, 5.00	(1) 19.1, 25.4, 31.8, 38.1 (5) 76.2, 88.9, 101.6, 127.0	3
Main Circuit Breaker with Box Lugs									
400–1200 A	20.00 (508.0)	47.63 (1209.8)	11.75 (298.5)	12.00 (304.8)	51.50 (1308.1)	30.63 (777.9)	(2) 0.50, 0.75, 1.00 (4) 2.00, 2.50, 3.00,3.50, 4.00	(2) 12.7, 19.1, 25.4 (4) 50.8, 63.5, 76.2, 88.9, 101.6	2
1400–2000 A	24.88 (632.0)	57.13 (1451.0)	14.88 (378.0)	16.00 (406.4)	57.13 (1451.0)	44.00 (1117.6)	—	—	—
Main Circuit Breaker with Compression Lugs									
400–1200 A	20.00 (508.0)	61.00 (1549.4)	11.75 (298.5)	12.00 (304.8)	65.00 (1651.0)	44.00 (1117.6)	(2) 0.50, 0.75, 1.00 (4) 2.00, 2.50, 3.00, 3.50, 4.00	(2) 12.7, 19.1, 25.4 (4) 50.8, 63.5, 76.2, 88.9, 101.60	2
Main Fusible Switch									
Bottom feed 400–800 A	20.00 (508.0)	47.63 (1209.8)	11.75 (298.5)	12.00 (304.8)	51.50 (1308.1)	30.63 (777.9)	(2) 0.50, 0.75, 1.00 (4) 2.00, 2.50, 3.00, 3.50, 4.00	(2) 12.7, 19.1, 25.4 (4) 50.8, 63.5, 76.2, 88.9, 101.6	2
Top feed 400–800 A	20.00 (508.0)	47.63 (1209.8)	11.75 (298.5)	12.00 (304.8)	51.50 (1308.1)	18.13 (460.4)	(2) 0.50, 0.75, 1.00 (4) 2.00, 2.50, 3.00, 3.50, 4.00	(2) 12.7, 19.1, 25.4 (4) 50.8, 63.5, 76.2, 88.9, 101.6	2
1200 A	33.50 (850.9)	52.75 (1339.9)	11.88 (301.8)	16.00 (406.4)	56.25 (1428.8)	30.75 (781.1)	(5) 3.50, 4.00, 5.00 (1) 0.75, 1.00, 1.25, 1.50	(5) 88.9, 101.6, 127.0 (1) 19.1, 25.4, 31.8, 38.1	4
Bolted Pressure Switch									
	36.50 (927.1)	66.50 (1689.1)	19.50 (495.3)	28.00 (711.2)	60.00 (1524.0)	30.63 (777.9)	—	—	—
Main Fusible Switch with Pull Box									
400 A	20.00 (508.0)	61.00 (1549.4)	11.75 (298.5)	12.00 (304.8)	65.00 (1651.0)	44.00 (1117.6)	(2) 0.50, 0.75, 1.00 (4) 2.00, 2.50, 3.00, 3.50, 4.00	(2) 12.7, 19.1, 25.4 (4) 50.8, 63.5, 76.2, 88.9, 101.6	2
600 and 800 A (single-phase)	20.00 (508.0)	61.00 (1549.4)	11.75 (298.5)	12.00 (304.8)	65.00 (1651.0)	44.00 (1117.6)	(2) 0.50, 0.75, 1.00 (4) 2.00, 2.50, 3.00, 3.50, 4.00	(2) 12.7, 19.1, 25.4 (4) 50.8, 63.5, 76.2, 88.9, 101.6	2
600 and 800 A (three-phase)	25.06 (636.5)	61.00 (1549.4)	11.75 (298.5)	17.00 (431.8)	65.00 (1651.0)	44.00 (1117.6)	(2) 0.50, 0.75, 1.00 (4) 2.00, 2.50, 3.00, 3.50, 4.00	(2) 12.7, 19.1, 25.4 (4) 50.8, 63.5, 76.2, 88.9, 101.6	4
1200 A	33.50 (850.9)	61.50 (1562.1)	11.88 (301.8)	16.00 (406.4)	65.25 (1657.4)	48.00 (1219.2)	(5) 3.50, 4.00, 5.00 (1) 0.75, 1.00, 1.25, 1.50	(5) 88.9, 101.6, 127.0 (1) 19.1, 25.4, 31.8, 38.1	4
Main Circuit Breaker with Pull Box (EUSERC)									
400 A	20.01 (508.2)	60.44 (1535.2)	11.14 (283.0)	12.00 (304.8)	65.11 (1653.8)	39.75 (1009.6)	(4) 2.50, 3.00, 3.50, 4.00	(4) 63.5, 76.2, 88.9, 101.6	2
800 A	24.88 (632.0)	60.94 (1547.9)	11.14 (283.0)	17.00 (431.8)	64.88 (1648.0)	39.81 (1011.2)	(4) 2.50, 3.00, 3.50, 4.00	(4) 63.5, 76.2, 88.9, 101.6	2
1200 A	33.00 (838.2)	61.14 (1553.0)	11.32 (287.5)	16.00 (406.4)	65.25 (1657.4)	43.56 (1106.4)	(4) 2.50, 3.00, 3.50, 4.00	(4) 63.5, 76.2, 88.9, 101.6	4
Pull Box									
400 A	16.38 (416.1)	44.88 (1140.0)	7.88 (200.2)	8.00 (203.2)	45.75 (1162.1)	28.63 (727.2)	(2) 4.00	101.6	5
800 A	24.38 (619.3)	46.88 (1190.8)	11.88 (301.8)	12.00 (304.8)	47.75 (1212.9)	32.25 (819.2)	(3) 4.00	101.6	6
1200 A	32.50 (825.5)	56.88 (1444.8)	12.00 (304.8)	17.75 (450.9)	57.75 (1466.9)	42.25 (1073.2)	(4) 5.00	127.0	7
EUSERC Bussed Pull Section									
Single-phase 400 and 800 A	20.13 (511.3)	61.00 (1549.4)	11.25 (285.8)	12.00 (304.8)	64.88 (1648.0)	44.00 (1117.6)	(4) 2.50, 3.00, 3.50, 4.00	(4) 63.5, 76.2, 88.9, 101.6	5
Three-phase 400 and 800 A	25.13 (638.3)	61.00 (1549.4)	11.88 (301.8)	17.00 (431.8)	64.88 (1648.0)	44.00 (1117.6)	(4) 2.50, 3.00, 3.50, 4.00	(4) 63.5, 76.2, 88.9, 101.6	6
EUSERC Main Terminal Box									
Single-phase 400 and 800 A	20.13 (511.3)	61.00 (1549.4)	11.88 (301.8)	12.00 (304.8)	64.88 (1648.0)	44.00 (1117.6)	(2) 0.50, 0.75, 1.00	(2) 12.7, 19.1, 25.4	2
Three-phase 400 A	20.13 (511.3)	61.00 (1549.4)	11.88 (301.8)	12.00 (304.8)	64.88 (1648.0)	44.00 (1117.6)	(4) 2.00, 2.50, 3.00, 3.50, 4.00	(4) 50.8, 63.5, 76.2, 88.9, 101.6	2
Three-phase 800 A	25.13 (638.3)	61.00 (1549.4)	11.88 (301.8)	17.00 (431.8)	64.88 (1648.0)	44.00 (1117.6)	(4) 2.00, 2.50, 3.00, 3.50, 4.00	(4) 50.8, 63.5, 76.2, 88.9, 101.6	2

Approximate Dimensions in Inches (mm)

Main Circuit Breakers, Terminal Boxes and Pull Boxes

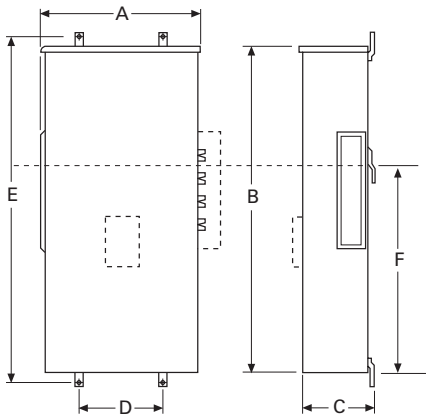

Main CB, Non-Euserc Terminal Box and Pullboxes

Bolted Pressure Switch

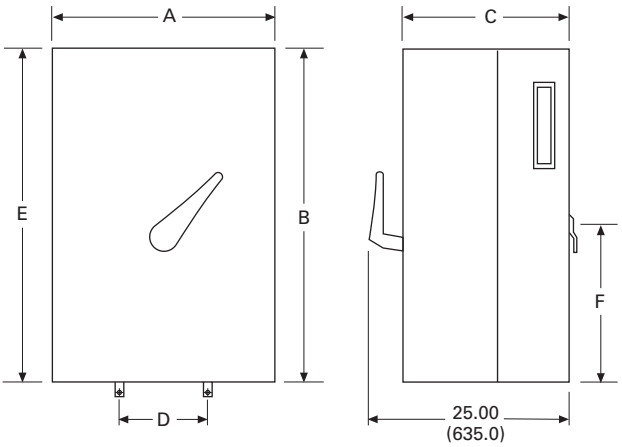

Top Feed Fusible Switch

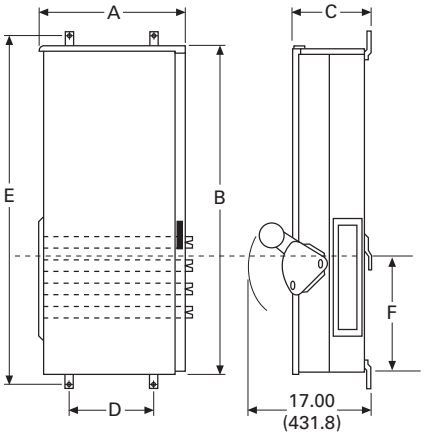

Top Feed Switch (No Knockouts)

EUSERC Main Terminal Box

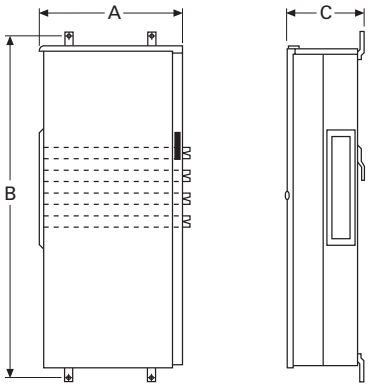

Bottom Feed Fusible Switch and Combination Fusible Switch with Pull Box

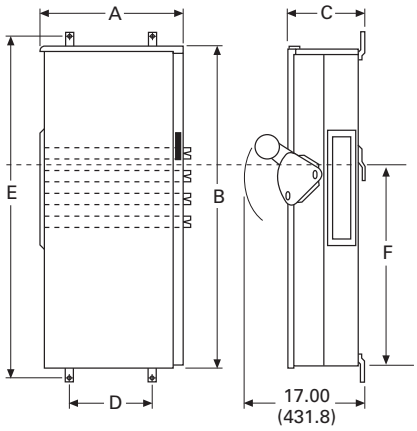

Bottom Feed Switch and Combination Switch/Pullbox

Approximate Dimensions in Inches (mm)

Knockout 1

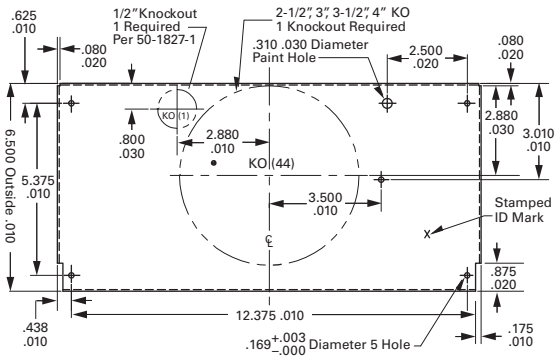

Knockout 2

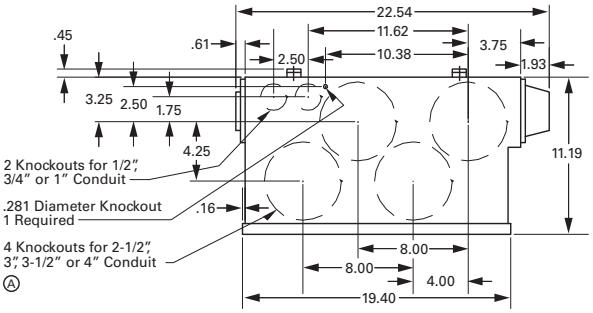

Knockout 3

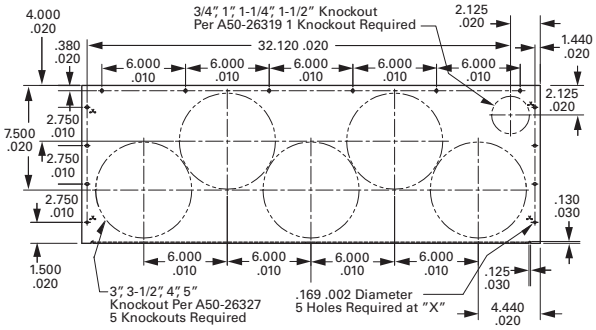

Knockout 4

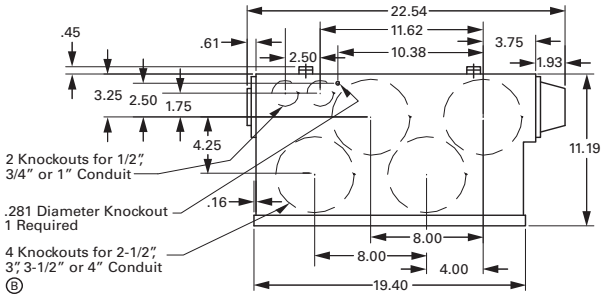

Knockout 5

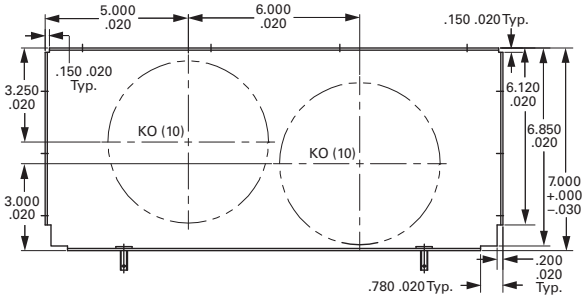

Knockout 6

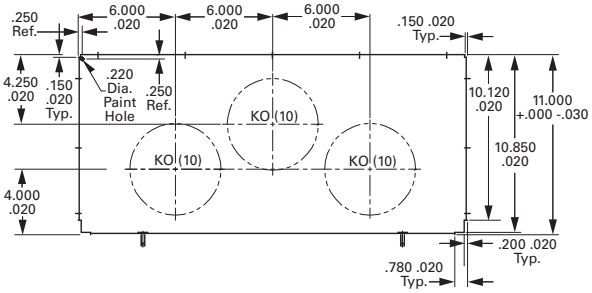

Knockout 7

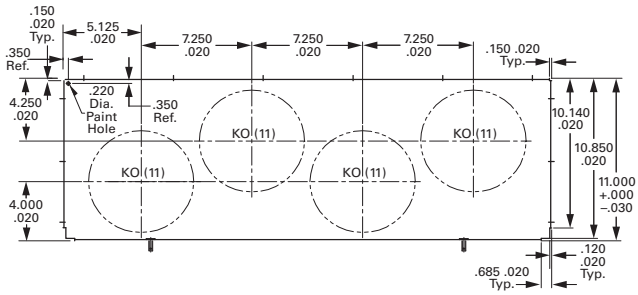

Knockout 8

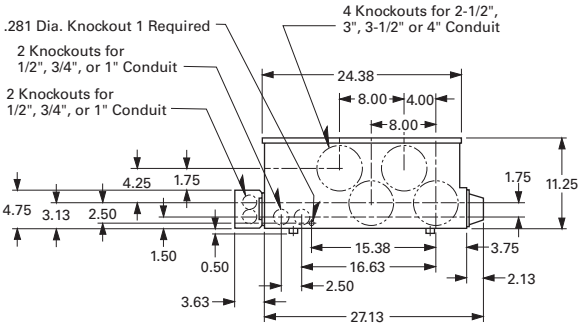

Approximate Dimensions in Inches (mm)

Layout—Main Fusible Switch

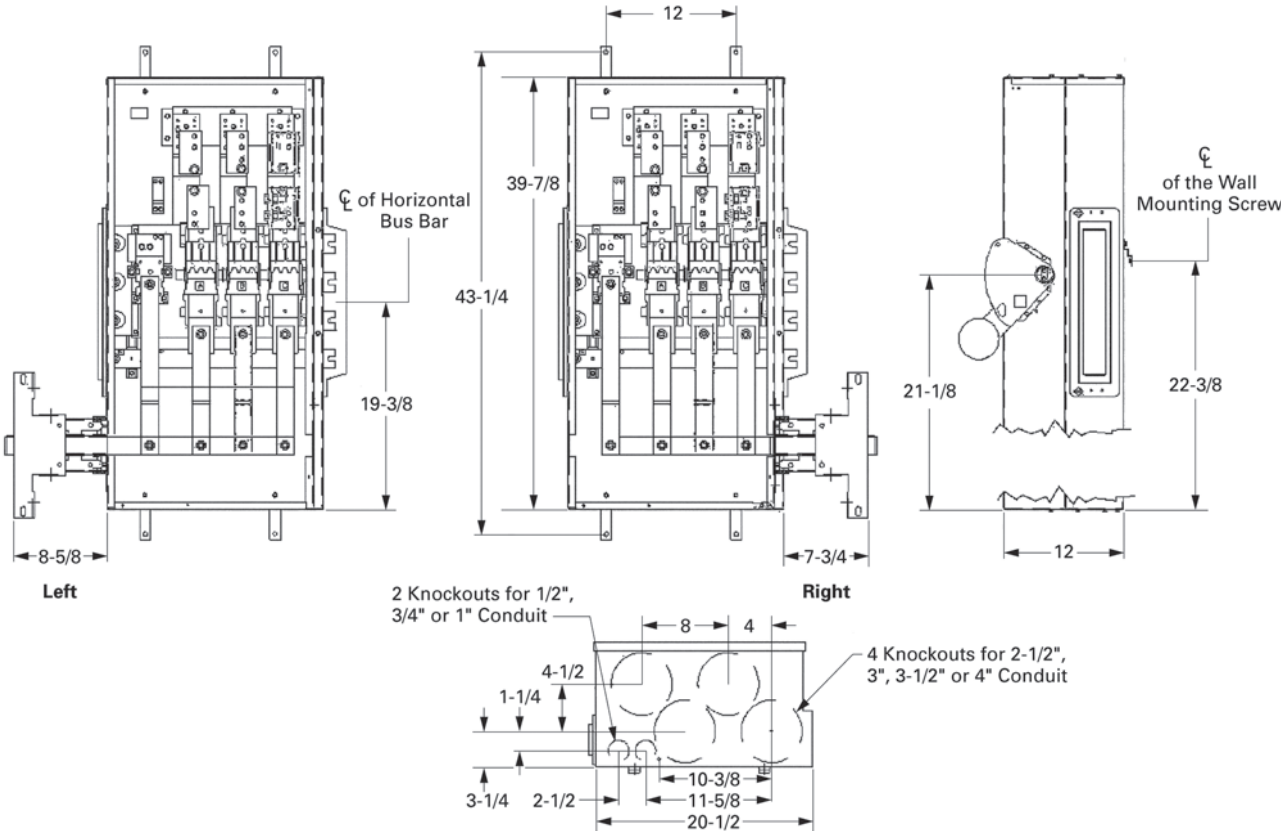

Approximate Dimensions in Inches (mm)

Main Circuit Breaker—"T-Opposite" Phasing Right

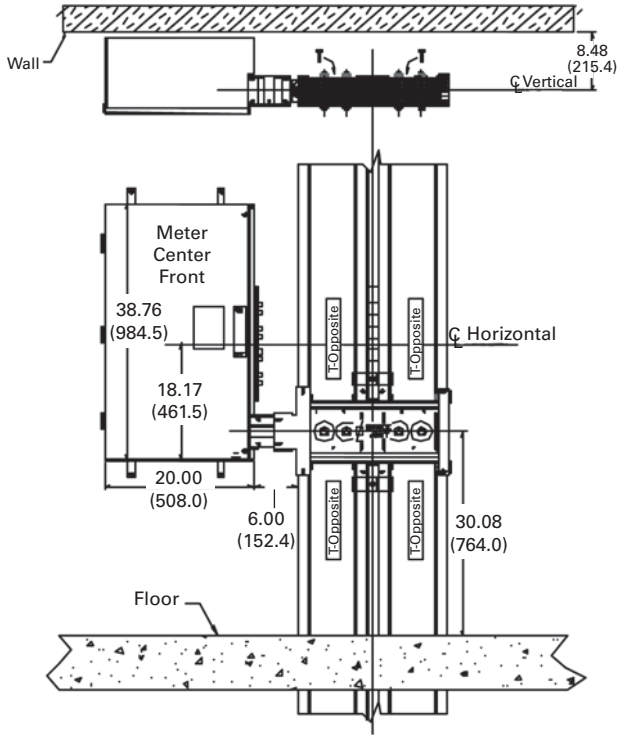

Main Circuit Breaker—"Standard T" Phasing Right

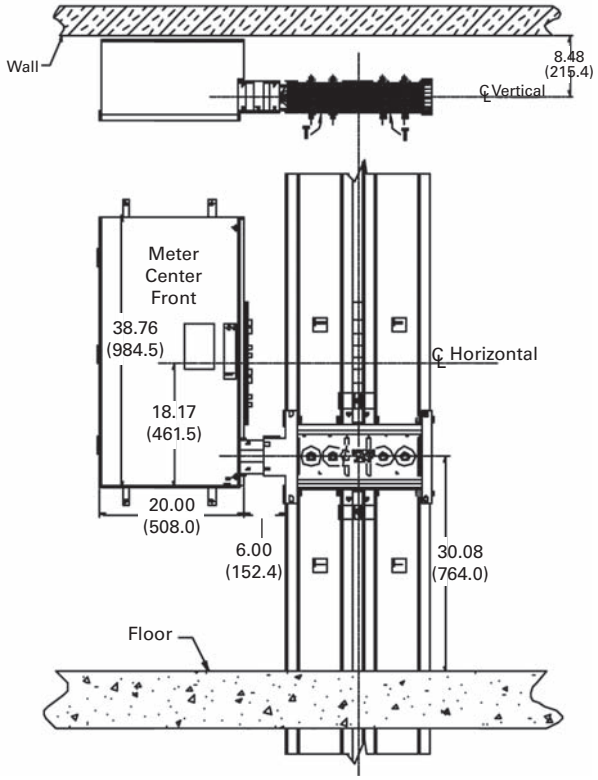

Main Circuit Breaker—"T-Opposite" Phasing Left

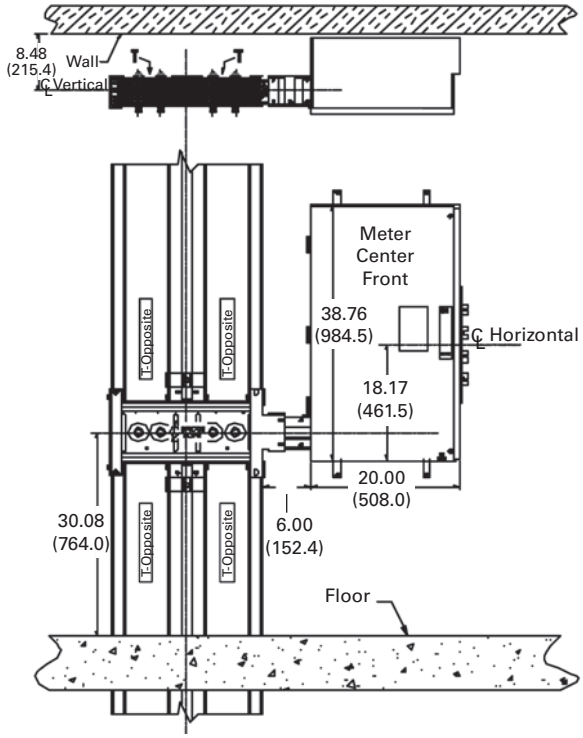

Main Circuit Breaker—"Standard T" Phasing Left

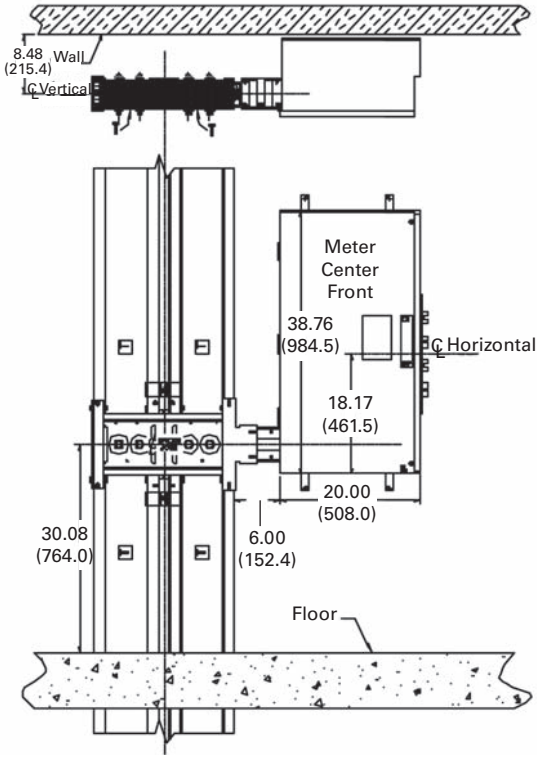

Surge Metering

Surge suppression devices shown are factory mounted in Group Metering Enclosure.

Contents

Description	*Page*
Systems for Residential and Commercial Applications	**V1-T4-88**
Meter Packs	**V1-T4-90**
Type CCV 120/240 V Tenant Main Circuit Breaker	**V1-T4-95**
Type CV 120/240 V Tenant Main Circuit Breaker	**V1-T4-96**
Meter Packs—1MP, 1MM and 3MM Main Tenant Circuit Breakers	**V1-T4-98**
Main Service Modules	**V1-T4-101**
Surge Metering	
Group Metering Inline Current Transformer Cabinets	**V1-T4-116**
Residential Meter Stacks	**V1-T4-118**
1MP, 1MM and 3MM Main Tenant Circuit Breakers	**V1-T4-127**
Phase Balanced Stack	**V1-T4-128**
Commercial Meter Stack Modules	**V1-T4-129**
35MM, 37MM, 35SS and 37SS Main Tenant Circuit Breakers	**V1-T4-136**

4

Surge Metering

Product Description

Eaton's multiple metering product family is proud to announce the availability of main surge devices. The new main surge is mounted between the main service module and the meter stacks and serves the purpose of providing surge protection for downstream multiple metering products. The main surge is compatible with all meter stacks currently manufactured (1MM, 3MM, 35MM and 37MM).

Features, Benefits and Functions

- Uses thermally protected metal oxide varistor (MOV) technology
- Compatible with 37MM enclosure accessories
- Protection status indicator lights EMI/RFI filtering and audible alarms
- Offers surge protection for all units fed from a main service module
- Benefit for building/complex owners who want to offer surge protection to their tenants. Owner can market their apartment complex as being surge friendly to appliances and electronics
- **Attain local utility company approval. Not for use in EUSERC area**

Standards and Certifications

- UL 1449 3rd Edition recognized component

UL Listed

Product Selection

Surge Metering

Voltage	Surge Current per Phase (kA)	Diagnostics	Catalog Number
120/240 V single-phase	100	Standard	**1MMSURGE**
208Y/120 V three-phase	100	Standard	**3MMSURGE**

Contents

Description	*Page*
Systems for Residential and Commercial Applications	**V1-T4-88**
Meter Packs	**V1-T4-90**
Type CCV 120/240 V Tenant Main Circuit Breaker	**V1-T4-95**
Type CV 120/240 V Tenant Main Circuit Breaker	**V1-T4-96**
Meter Packs—1MP, 1MM and 3MM Main Tenant Circuit Breakers	**V1-T4-98**
Main Service Modules	**V1-T4-101**
Surge Metering	**V1-T4-115**
Group Metering Inline Current Transformer Cabinets	
Residential Meter Stacks	**V1-T4-118**
1MP, 1MM and 3MM Main Tenant Circuit Breakers	**V1-T4-127**
Phase Balanced Stack	**V1-T4-128**
Commercial Meter Stack Modules	**V1-T4-129**
35MM, 37MM, 35SS and 37SS Main Tenant Circuit Breakers	**V1-T4-136**

Group Metering Inline Current Transformer Cabinets

Product Description

Eaton's group metering inline current transformer (CT) cabinets are used when utilities require the use of current transformers to meter large services. These products are compatible with Eaton's group metering offering for both single- and three-phase applications with tenant metering requirements greater than 400 A.

Features, Benefits and Functions

- Replaces separate termination box in installation to save wall space, labor and material for the contractor
- Compatible for utility-provided current transformers to be bolted in place, increasing flexibility to both the customer and utility
- Padlockable hinged doors restrict access to fuses or current transformers to ensure safety and security
- Available for pullout or fusible switch disconnect to accommodate the user's preference
- Offered in three-phase in/three-phase out, three-phase in / single-phase out, and single-phase in/single-phase out to complete a full product line offering

Product Selection

Group Metering Inline Current Transformer Cabinets

Ampere Rating	Pullout or Switch	Phase	Catalog Number
400	2 Pullouts	Single-phase in / single-phase out	**CTAP3244NCM8CH11**
400	2 Pullouts	Three-phase in / single-phase out	**CTAP3244NCM8CH31**
400	1 Pullout	Single-phase in / single-phase out	**CTAP325NCM8CH11**
400	1 Pullout	Three-phase in / single-phase out	**CTAP325NCM8CH31**
400	2 Pullouts	Three-phase in / three-phase out	**CTAP4244NCM8CH**
400	1 Pullout	Three-phase in / three-phase out	**CTAP425NCM8CH**
400	Switch	Single-phase in / single-phase out	**CTAT325NCM8CH11**
400	Switch	Three-phase in / single-phase out	**CTAT325NCM8CH31**
600	Switch	Single-phase in / single-phase out	**CTAT326NCM8CH11**
600	Switch	Three-phase in / single-phase out	**CTAT326NCM8CH31**
800	Switch	Single-phase in / single-phase out	**CTAT327NCM8CH11**
800	Switch	Three-phase in / single-phase out	**CTAT327NCM8CH31**
400	Switch	Three-phase in / three-phase out	**CTAT425NCM8CH**
600	Switch	Three-phase in / three-phase out	**CTAT426NCM8CH**
800	Switch	Three-phase in / three-phase out	**CTAT427NCM8CH**

Accessories

Group Metering Inline Current Transformer Cabinets

Description	Catalog Number
Wire harness (6 ft) per COMED requirements	**9659**
400 A C/T link and support assembly	**CTL054550**
600 A C/T link and support assembly	**CTL054552**
800 A C/T link and support assembly	**CTL054554**

Dimensions

Approximate Dimensions in Inches (mm)

Group Metering Inline Current Transformer Cabinets

Height	Width	Depth
64.00 (1625.6)	26.50 (673.1)	15.00 (381.0)

1MM and 3MM Metering Stack Modules

Contents

Description	*Page*
Systems for Residential and Commercial Applications	**V1-T4-88**
Meter Packs	**V1-T4-90**
Type CCV 120/240 V Tenant Main Circuit Breaker	**V1-T4-95**
Type CV 120/240 V Tenant Main Circuit Breaker	**V1-T4-96**
Meter Packs—1MP, 1MM and 3MM Main Tenant Circuit Breakers	**V1-T4-98**
Main Service Modules	**V1-T4-101**
Surge Metering	**V1-T4-115**
Group Metering Inline Current Transformer Cabinets	**V1-T4-116**
Residential Meter Stacks	
1MP, 1MM and 3MM Main Tenant Circuit Breakers	**V1-T4-127**
Phase Balanced Stack	**V1-T4-128**
Commercial Meter Stack Modules	**V1-T4-129**
35MM, 37MM, 35SS and 37SS Main Tenant Circuit Breakers	**V1-T4-136**

Residential Meter Stacks

Features, Benefits and Functions

A. Barrier
Meter socket and tenant main breaker/wireway sections are separated by a solid metal barrier to guard unmetered bus against power theft.

B. Tenant Breaker
Reliable busbar–to–busbar connection. 200 A modules accept bolt-on breakers 60–200 A. 125 A modules accept 15–125 A plug-on breakers.

C. Moveable Phase Connector
Four-wire horizontal bus lets you use any 3MM module for single- or three-phase incoming service. Shipped with A and B phase connection, phase balancing is easily accomplished in the field by moving one, front-accessible phase connector post per module.

D. Neutral Assembly
A convenient termination for neutral conductors is in the wireway of each module.

E. Enclosed Horizontal Bus
Added security because a non-removable barrier encloses the 800 or 1200 A horizontal bus passing through tenant breaker section.

F. Equipment Ground Bar
Factory installed in side gutter, a standard feature that's moveable to the top or bottom gutter.

G. Raintight Cap
Shipped on each outdoor meter module and main device.

H. Knockouts
Tangential in bottom endwall.

I. Superior Finish
Rust inhibiting phosphate primer and gray baked enamel is standard. All outdoor enclosures are of galvanized steel construction.

J. Meter Socket
Our unique meter socket base is installed without any fasteners—reducing chances for hot spots, easily replaceable, and improves connection to vertical bus.

K. Bus Connection
Mains and modules slip together quickly and smoothly with front-accessible captive bolts securing the juncture without removing socket interiors or bus access plate. Main bus joint bolts torque to 25 foot pounds.

L. Separate Wireway Cover
Separate covers allow easy access to tenant breaker and wireway section, permit work on breakers or in wireway without disturbing meters or meter covers. (Not shown.)

M. Vertical Busbar
One-piece vertical busbar from phase balancing joints to meter socket eliminating any chance for hot spots.

1MM Meter Stack Module

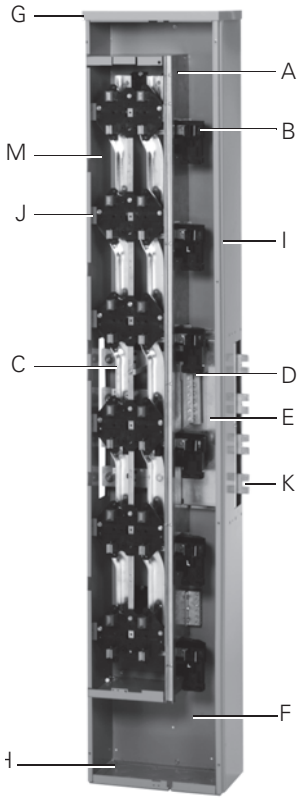

- Eaton's 1MM stacks are single-phase in, single-phase out design
- Eaton's 3MM stacks are three-phase in, single-phase out design
- Stacks with single-phase horizontal bus are rated 240/120 V, single-phase, three-wire. Stacks with three-phase horizontal bus are rated 208Y/120 V, three-phase, four-wire, but can be used on 240/120 V, three-phase, four-wire delta systems
- All three-phase horizontal bus modules have four-wire cross bus, connected A-B phase to vertical bus, readily reconnectable for phase balance on installation

Note: Individual sockets cannot be phase balanced, only each stack.

- Short-circuit ratings up to 100,000 A rms symmetrical depending upon AIC rating of installed main tenant circuit breakers and main device
- Main tenant feeders can exit bottom or back. Knockouts are available at all exit locations
- If being used in outdoor application and exiting the top, mount Myer type hubs on rainproof cap
- Provision for two-pole breaker (plug-on type for 125 A sockets and bolt-on type for 200 A sockets)—circuit breakers not included
- Mechanically and electrically built to bolt-up with main service modules and commercial modular metering stacks
- Aluminum or copper bus
- 800 or 1200 A horizontal bus
- All 3MM stacks include fifth jaw at 9 o'clock position
- All 1MM stacks do not include fifth jaw. Order 1MM5JK if needed

Catalog Number Selection

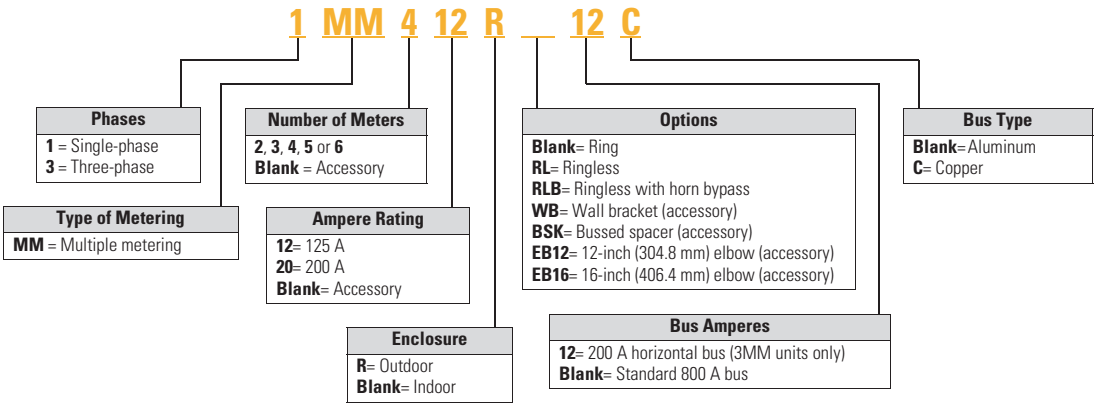

When Ordering:

1. Determine catalog number of Main Service Module.
2. Determine catalog number of Meter Stack (Residential or Commercial).
3. Find quantity and catalog numbers for tenant circuit breakers (found on **Page V1-T4-127** or **V1-T4-137**). Order one breaker per socket.
4. If any accessories are needed, order from **Pages V1-T4-138** and **V1-T4-139**.

Product Selection

1MM and 3MM Metering Stack Modules

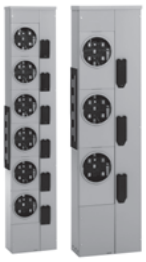

800 A Horizontal Aluminum Bus—Standard Offering

Amperes Per Meter Socket	Number of Meter Sockets	Bus Ampacity	Enclosure Type ①	Main Tenant Breaker Type (For Specific Catalog Numbers, Refer to Page V1-T4-127)	Single-Phase In, Single-Phase Out Single-Phase Horizontal Bus (Three Horizontal Busbars—A, B and Neutral) ② Catalog Number	Three-Phase In, Single-Phase Out Three-Phase Horizontal Bus (Four Horizontal Busbars—A, B, C and Neutral) Catalog Number
Ring Style Meter Socket Covers ③						
125 ④	2 ⑤	800	Indoor/outdoor	Plug-on type BR2_ BRH2_ BRHH2_ BRX2_	Use three-phase	**3MM212R**
	3 ⑤	800	Indoor/outdoor		**1MM312R**	**3MM312R**
	4	800	Indoor/outdoor		**1MM412R**	**3MM412R**
	5	800	Indoor/outdoor		**1MM512R**	**3MM512R**
	6	800	Indoor/outdoor		**1MM612R**	**3MM612R**
200 ⑥	2	800	Outdoor	Bolt-on type CCV2_X CCVH2_X CVS2_XMM CV2_XMM CVH2_XMM	Use three-phase	**3MM220R**
	3	800	Outdoor		**1MM320R**	**3MM320R**
	4	800	Outdoor		**1MM420R**	**3MM420R**
	5	800	Outdoor		**1MM520R** ⑦	**3MM520R** ⑥
Ringless Style Meter Socket Covers						
125	2	800	Outdoor	Plug-on type BR2_ BRH2_ BRHH2_ BRX2_	Use three-phase	**3MM212RRL**
	3	800	Outdoor		**1MM312RRL**	**3MM312RRL**
	4	800	Outdoor		**1MM412RRL**	**3MM412RRL**
	5	800	Outdoor		**1MM512RRL**	**3MM512RRL**
	6	800	Outdoor		**1MM612RRL**	**3MM612RRL**
200	2	800	Outdoor	Bolt-on type CCV2_X CCVH2_X CVS2_XMM CV2_XMM CVH2_XMM	Use three-phase	**3MM220RRL**
	3	800	Outdoor		**1MM320RRL**	**3MM320RRL**
	4	800	Outdoor		**1MM420RRL**	**3MM420RRL**
	5	800	Outdoor		**1MM520RRL** ⑦	**3MM520RRL** ⑥
Ringless Style Covers with Horn Bypass						
125	2	800	Outdoor	Plug-on type BR2_ BRH2_ BRHH2_ BRX2_	Use three-phase	**3MM212RRLB**
	3	800	Outdoor		**1MM312RRLB**	**3MM312RRLB**
	4	800	Outdoor		**1MM412RRLB**	**3MM412RRLB**
	5	800	Outdoor		**1MM512RRLB**	**3MM512RRLB**
	6	800	Outdoor		**1MM612RRLB**	**3MM612RRLB**
200	2	800	Outdoor	Bolt-on type CCV2_X CCVH2_X CVS2_XMM CV2_XMM CVH2_XMM	Use three-phase	**3MM220RRLB**
	3	800	Outdoor		**1MM320RRLB**	**3MM320RRLB**
	4	800	Outdoor		**1MM420RRLB**	**3MM420RRLB**
	5	800	Outdoor		**1MM520RRLB** ⑦	**3MM520RRLB** ⑥

Notes

① For indoor applications where a top endwall with knockouts is needed, order one of part number **MM12N1WLK** for each 125 A stack or **MM20N1WLK** for each 200 A stack.
② 1MM units do not come with 5th jaw.
③ Reference drawing EUSERC DWG-G1, G2, G3.
④ To change in field from ring to ringless—order **1MMRC125**.
⑤ To change in field from ring to ringless, the top socket in 125 A, two- and three-high stacks use **1MMRC125T**. Top socket only—other sockets see ④.
⑥ To change in field from ring to ringless—order **1MMRC200**.
⑦ Check with local utility for height requirements or restrictions.

1MM and 3MM Metering Stack Modules

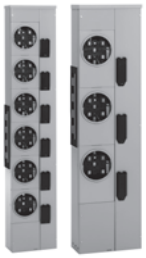

800 A Horizontal Copper Bus—Premium Offering

Amperes Per Meter Socket	Number of Meter Sockets	Bus Ampacity	Enclosure Type ①	Main Tenant Breaker Type (For Specific Catalog Numbers, Refer to Page V1-T4-127)	Single-Phase In, Single-Phase Out Single-Phase Horizontal Bus (Three Horizontal Busbars—A, B, C and Neutral) ② Catalog Number	Three-Phase In, Single-Phase Out Three-Phase Horizontal Bus (Four Horizontal Busbars—A, B, C and Neutral) Catalog Number
Ring Style Meter Socket Covers ③						
125 ④	2 ⑤	800	Outdoor	Plug-on type BR2_ BRH2_ BRHH2_ BRX2_	Use three-phase	**3MM212RC**
	3 ⑤	800	Outdoor		**1MM312RC**	**3MM312RC**
	4	800	Outdoor		**1MM412RC**	**3MM412RC**
	5	800	Outdoor		**1MM512RC**	**3MM512RC**
	6	800	Outdoor		**1MM612RC**	**3MM612RC**
200 ⑥	2	800	Outdoor	Bolt-on type CCV2_X CCVH2_X CVS2_XMM CV2_XMM CVH2_XMM	Use three-phase	**3MM220RC**
	3	800	Outdoor		**1MM320RC**	**3MM320RC**
	4	800	Outdoor		**1MM420RC**	**3MM420RC**
	5	800	Outdoor		**1MM520RC** ⑦	**3MM520RC** ⑥
Ringless Style Meter Socket Covers						
125	2	800	Outdoor	Plug-on type BR2_ BRH2_ BRHH2_ BRX2_	Use three-phase	**3MM212RRLC**
	3	800	Outdoor		**1MM312RRLC**	**3MM312RRLC**
	4	800	Outdoor		**1MM412RRLC**	**3MM412RRLC**
	5	800	Outdoor		**1MM512RRLC**	**3MM512RRLC**
	6	800	Outdoor		**1MM612RRLC**	**3MM612RRLC**
200	2	800	Outdoor	Bolt-on type CCV2_X CCVH2_X CVS2_XMM CV2_XMM CVH2_XMM	Use three-phase	**3MM220RRLC**
	3	800	Outdoor		**1MM320RRLC**	**3MM320RRLC**
	4	800	Outdoor		**1MM420RRLC**	**3MM420RRLC**
	5	800	Outdoor		**1MM520RRLC** ⑦	**3MM520RRLC** ⑥
Ringless Style Covers with Horn Bypass						
125	2	800	Outdoor	Plug-on type BR2_ BRH2_ BRHH2_ BRX2_	Use three-phase	**3MM212RRLBC**
	3	800	Outdoor		**1MM312RRLBC**	**3MM312RRLBC**
	4	800	Outdoor		**1MM412RRLBC**	**3MM412RRLBC**
	5	800	Outdoor		**1MM512RRLBC**	**3MM512RRLBC**
	6	800	Outdoor		**1MM612RRLBC**	**3MM612RRLBC**
200	2	800	Outdoor	Bolt-on type CCV2_X CCVH2_X CVS2_XMM CV2_XMM CVH2_XMM	Use three-phase	**3MM220RRLBC**
	3	800	Outdoor		**1MM320RRLBC**	**3MM320RRLBC**
	4	800	Outdoor		**1MM420RRLBC**	**3MM420RRLBC**
	5	800	Outdoor		**1MM520RRLBC** ⑦	**3MM520RRLBC** ⑥

Notes

① For indoor applications where a top endwall with knockouts is needed, order (1) of part number **MM12N1WLK** for each 125 A stack or **MM20N1WLK** for each 200 A stack.
② 1MM units do not come with 5th jaw.
③ Reference drawing EUSERC DWG-G1, G2, G3.
④ To change in field from ring to ringless—order **1MMRC125**.
⑤ To change in field from ring to ringless, the top socket in 125 A, two- and three-high stacks use **1MMRC125T**. Top socket only—other sockets see ④.
⑥ To change in field from ring to ringless—order **1MMRC200**.
⑦ Check with local utility for height requirements or restrictions.

1MM and 3MM Metering Stack Modules

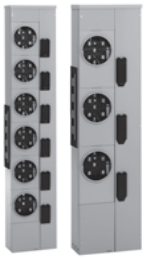

1200 A Horizontal Aluminum Bus—Standard Offering

Amperes Per Meter Socket	Number of Meter Sockets	Bus Ampacity	Enclosure Type ①	Main Tenant Breaker Type (For Specific Catalog Numbers, Refer to Page V1-T4-118)	Three-Phase In, Single-Phase Out Three-Phase Horizontal Bus (Four Horizontal Busbars—A, B, C and Neutral) Catalog Number
Ring Style Meter Socket Covers ②					
125 ③	2 ④	1200	Indoor/outdoor	Plug-on type BR2_ BRH2_ BRHH2_ BRX2_	**3MM212R12**
	3 ④	1200	Indoor/outdoor		**3MM312R12**
	4	1200	Indoor/outdoor		**3MM412R12**
	5	1200	Indoor/outdoor		**3MM512R12**
	6	1200	Indoor/outdoor		**3MM612R12**
200 ⑤	2	1200	Outdoor	Bolt-on type CCV2_X CCVH2_X CVS2_XMM CV2_XMM CVH2_XMM	**3MM220R12**
	3	1200	Outdoor		**3MM320R12**
	4	1200	Outdoor		**3MM420R12**
	5	1200	Indoor/outdoor		**3MM520R12**
Ringless Style Meter Socket Covers (5th Jaw at 9 o'Clock Standard—Field Adjustable to 3 or 6 o'Clock)					
125	2	1200	Outdoor	Plug-on type BR2_ BRH2_ BRHH2_ BRX2_	**3MM212R12RL**
	3	1200	Outdoor		**3MM312R12RL**
	4	1200	Outdoor		**3MM412R12RL**
	5	1200	Outdoor		**3MM512R12RL**
	6	1200	Outdoor		**3MM612R12RL**
200	2	1200	Outdoor	Bolt-on type CCV2_X CCVH2_X CVS2_XMM CV2_XMM CVH2_XMM	**3MM220R12RL**
	3	1200	Outdoor		**3MM320R12RL**
	4	1200	Outdoor		**3MM420R12RL**
	5	1200	Outdoor		**3MM520R12RL**
Ringless Style Covers with Horn Bypass (5th Jaw at 9 o'Clock Standard—Field Adjustable to 3 or 6 o'Clock)					
125	2	1200	Outdoor	Plug-on type BR2_ BRH2_ BRHH2_ BRX2_	**3MM212R12RLB**
	3	1200	Outdoor		**3MM312R12RLB**
	4	1200	Outdoor		**3MM412R12RLB**
	5	1200	Outdoor		**3MM512R12RLB**
	6	1200	Outdoor		**3MM612R12RLB**
200	2	1200	Outdoor	Bolt-on type CCV2_X CCVH2_X CVS2_XMM CV2_XMM CVH2_XMM	**3MM220R12RLB**
	3	1200	Outdoor		**3MM320R12RLB**
	4	1200	Outdoor		**3MM420R12RLB**
	5	1200	Outdoor		**3MM520R12RLB**

Notes

① 111For indoor applications where a top endwall with knockouts is needed, order (one) of part number **MM12N1WLK** for each 125 A stack or **MM20N1WLK** for each 200 A stack.

② Reference drawing EUSERC DWG-G1, G2, G3.

③ To change in field from ring to ringless—order **1MMRC125**.

④ To change in field from ring to ringless, the top socket in 125 A, two- and three-high stacks use **1MMRC125T**. Top socket only—other sockets see ③.

⑤ To change in field from ring to ringless—order **1MMRC200**.

1MM and 3MM Metering Stack Modules

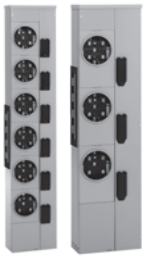

1200 A Horizontal Copper Bus—Premium Offering

Amperes Per Meter Socket	Number of Meter Sockets	Bus Ampacity	Enclosure Type ①	Main Tenant Breaker Type (For Specific Catalog Numbers, Refer to Page V1-T4-118)	Three-Phase In, Single-Phase Out Three-Phase Horizontal Bus (Four Horizontal Busbars—A, B, C and Neutral) Catalog Number
Ring Style Meter Socket Covers ②					
125 ③	2 ④	1200	Indoor/outdoor	Plug-on type BR2_ BRH2_ BRHH2_ BRX2_	**3MM212R12C**
	3 ④	1200	Indoor/outdoor		**3MM312R12C**
	4	1200	Indoor/outdoor		**3MM412R12C**
	5	1200	Indoor/outdoor		**3MM512R12C**
	6	1200	Indoor/outdoor		**3MM612R12C**
200 ⑤	2	1200	Outdoor	Bolt-on type CCV2_X CCVH2_X CVS2_XMM CV2_XMM CVH2_XMM	**3MM220R12C**
	3	1200	Outdoor		**3MM320R12C**
	4	1200	Outdoor		**3MM420R12C**
	5	1200	Outdoor		**3MM520R12C**
Ringless Style Meter Socket Covers (5th Jaw at 9 o'Clock Standard—Field Adjustable to 3 or 6 o'Clock)					
125	2	1200	Outdoor	Plug-on type BR2_ BRH2_ BRHH2_ BRX2_	**3MM212R12RLC**
	3	1200	Outdoor		**3MM312R12RLC**
	4	1200	Outdoor		**3MM412R12RLC**
	5	1200	Outdoor		**3MM512R12RLC**
	6	1200	Outdoor		**3MM612R12RLC**
200	2	1200	Outdoor	Bolt-on type CCV2_X CCVH2_X CVS2_XMM CV2_XMM CVH2_XMM	**3MM220R12RLC**
	3	1200	Outdoor		**3MM320R12RLC**
	4	1200	Outdoor		**3MM420R12RLC**
	5	1200	Outdoor		**3MM520R12RLC**
Ringless Style Covers with Horn Bypass (5th Jaw at 9 o'Clock Standard—Field Adjustable to 3 or 6 o'Clock)					
125	2	1200	Outdoor	Plug-on type BR2_ BRH2_ BRHH2_ BRX2_	**3MM212R12RLBC**
	3	1200	Outdoor		**3MM312R12RLBC**
	4	1200	Outdoor		**3MM412R12RLBC**
	5	1200	Outdoor		**3MM512R12RLBC**
	6	1200	Outdoor		**3MM612R12RLBC**
200	2	1200	Outdoor	Bolt-on type CCV2_X CCVH2_X CVS2_XMM CV2_XMM CVH2_XMM	**3MM220R12RLBC**
	3	1200	Outdoor		**3MM320R12RLBC**
	4	1200	Outdoor		**3MM420R12RLBC**
	5	1200	Outdoor		**3MM520R12RLBC**

Technical Data and Specifications

Wire Sizes—Neutral and Ground Lugs

- Each stack includes a neutral and ground bar
- If an extra ground bar is needed, order **1MMGBK**

Wire Sizes—Neutral and Ground Lugs

Lugs in Meter Socket Modules	Wire Size, Al/Cu
Branch neutral—125 A socket module	#6–2/0 kcmil
Branch neutral—200 A socket module	#1/0–300 kcmil
Equipment ground bar—125 A socket module	#14–#2 kcmil
Equipment ground bar—200 A socket module	#14–2/0 kcmil
Optional ground bar (**1MMGBK**)	#6–2/0 kcmil

Notes

① For indoor applications where a top endwall with knockouts is needed, order (one) of part number **MM12N1WLK** for each 125 A stack or **MM20N1WLK** for each 200 A stack.

② Reference drawing EUSERC DWG-G1, G2, G3.

③ To change in field from ring to ringless—order **1MMRC125**.

④ To change in field from ring to ringless, the top socket in 125 A, two- and three-high stacks use **1MMRC125T**. Top socket only—other sockets see ③.

⑤ To change in field from ring to ringless—order **1MMRC200**.

Dimensions

Approximate Dimensions in Inches (mm)

Modular Metering Stacks—Aluminum and Copper

1MM, 3MM, 125 Amperes

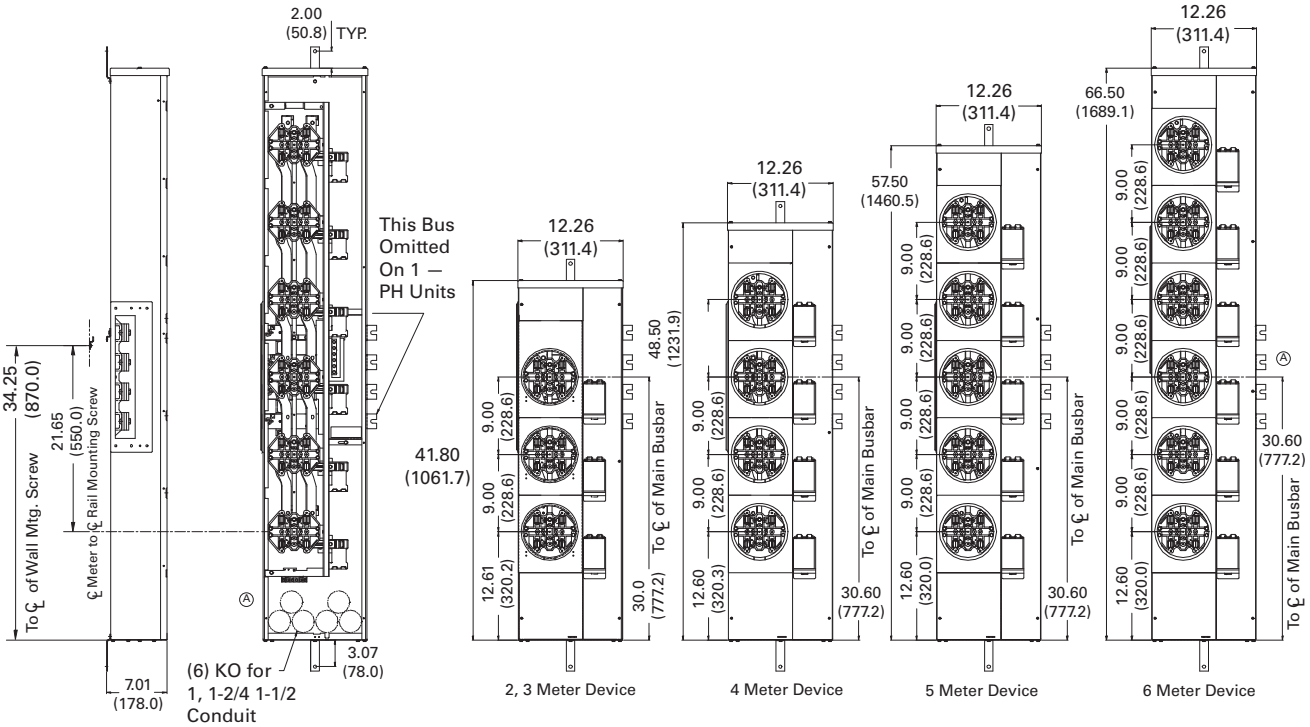

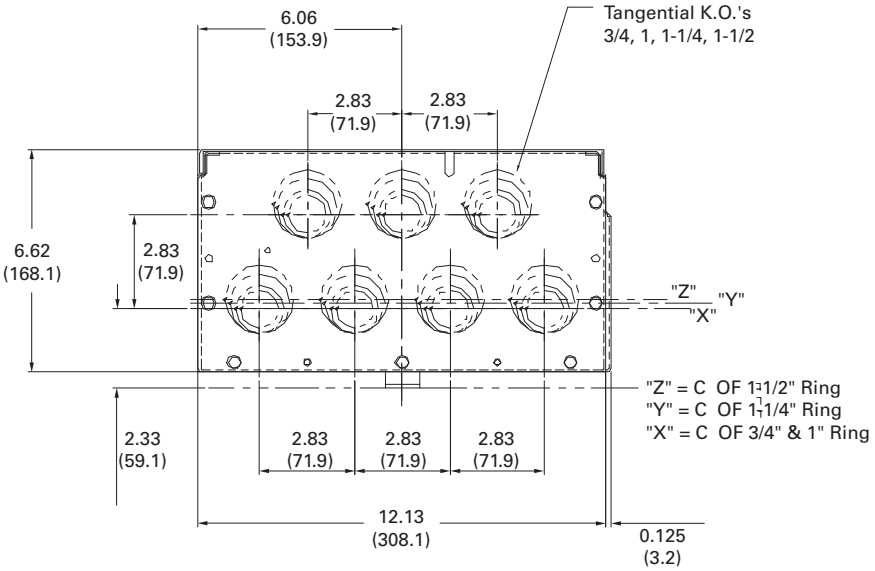

Top End & Bottom End View for NEMA 1;
Bottom End View for NEMA 3R

Note: Dimensions Apply to 800 and 1200 Ampere Horizontal Bus.

Approximate Dimensions in Inches (mm)

Modular Metering Stacks—Aluminum and Copper

1MM, 3MM, 200 Amperes

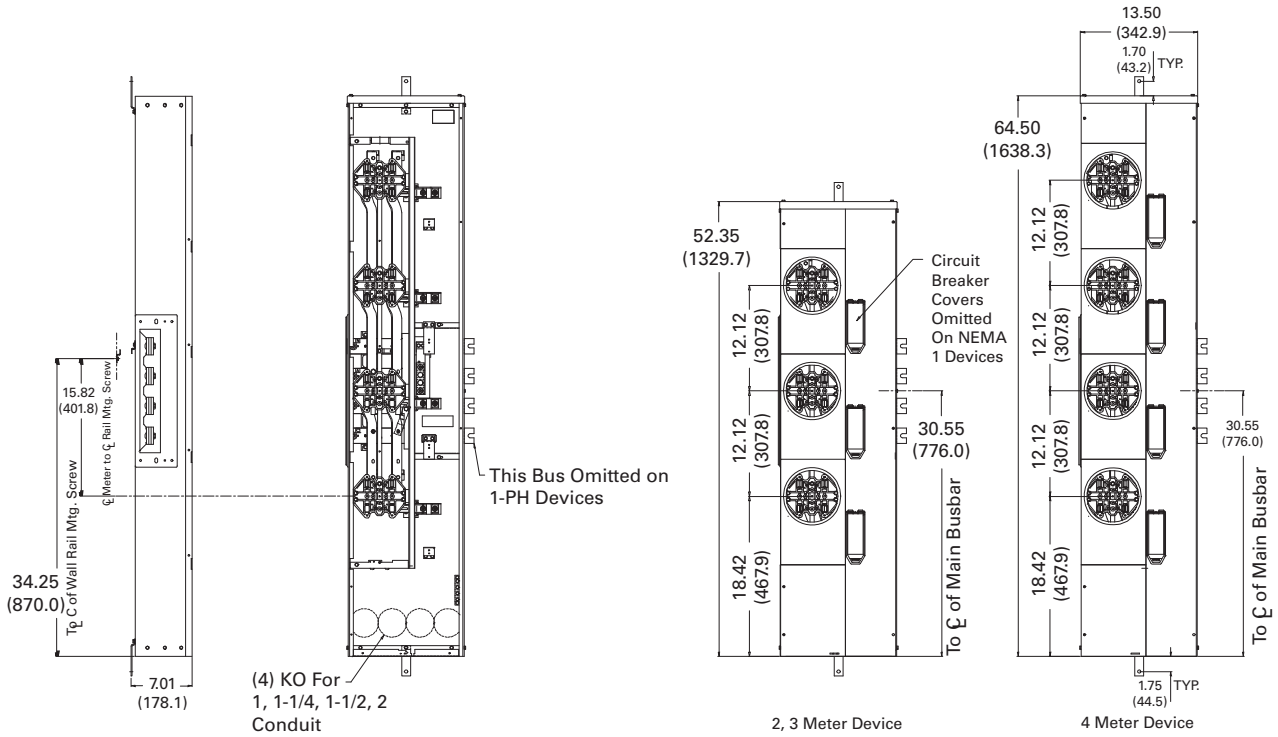

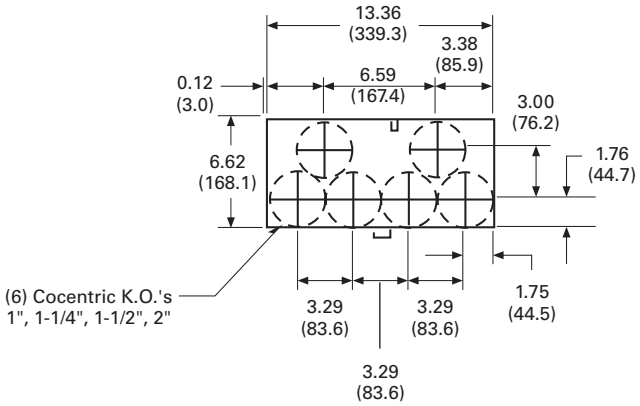

Bottom View

Note: Dimensions Apply to 800 and 1200 Ampere Horizontal Bus.

Approximate Dimensions in Inches (mm)

5-High, 200 Amperes, 1MM and 3MM Metering

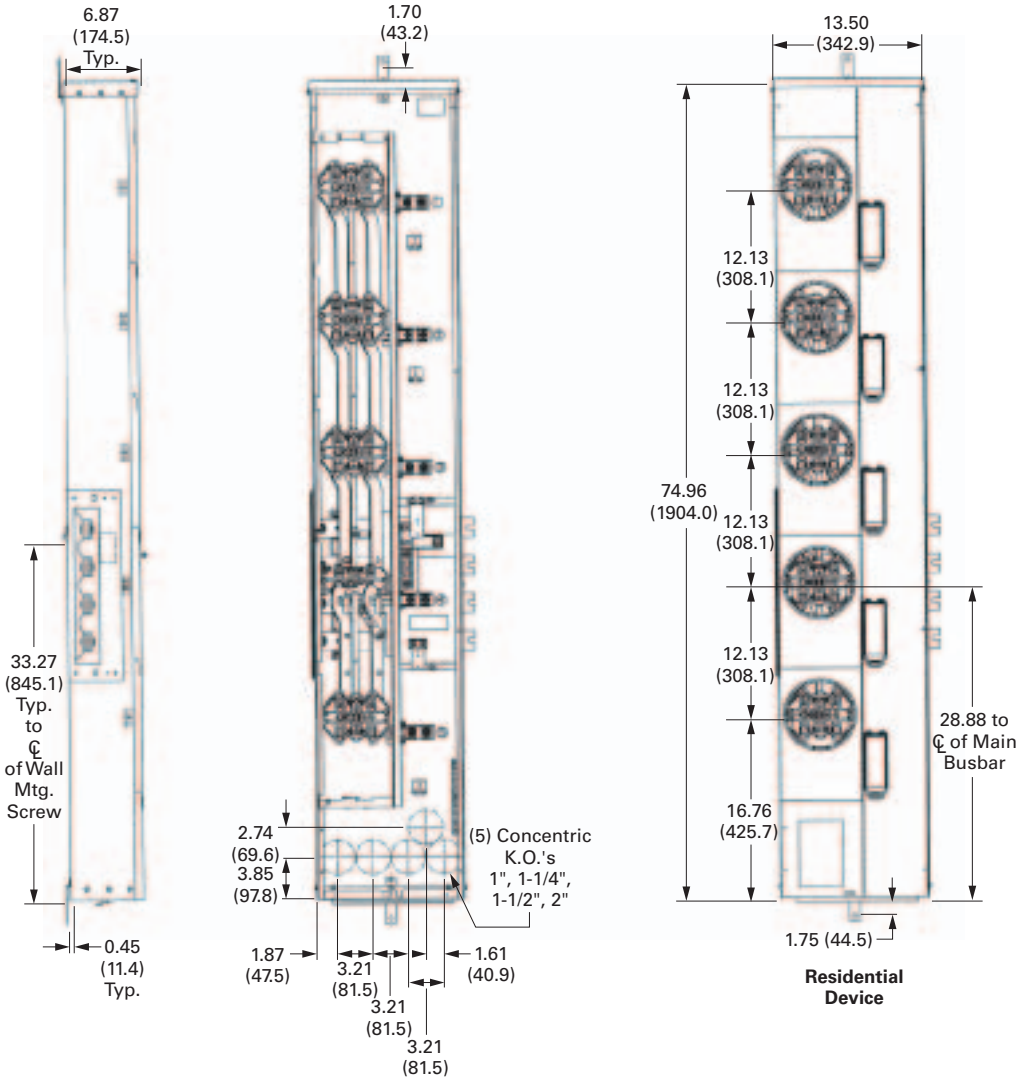

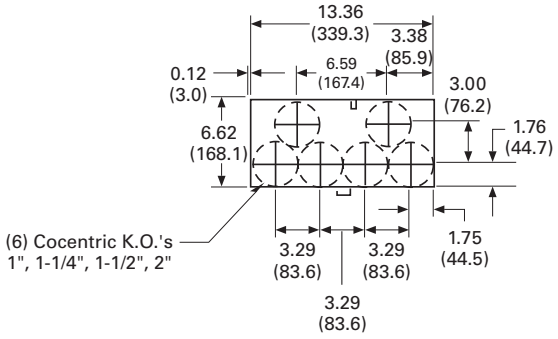

Note: The Bussed meter stack device shown on the far right of the figure, must be used on Mains with Busway connections, found on **Pages V1-T4-109** and **V1-T4-113**. Please contact factory for catalog numbers associated with Bussed meter stack devices.

1MM and 3MM Metering Circuit Breakers

CV2200

Contents

Description	*Page*
Systems for Residential and Commercial Applications	**V1-T4-88**
Meter Packs	**V1-T4-90**
Type CCV 120/240 V Tenant Main Circuit Breaker	**V1-T4-95**
Type CV 120/240 V Tenant Main Circuit Breaker	**V1-T4-96**
Meter Packs—1MP, 1MM and 3MM Main Tenant Circuit Breakers	**V1-T4-98**
Main Service Modules	**V1-T4-101**
Surge Metering	**V1-T4-115**
Group Metering Inline Current Transformer Cabinets	**V1-T4-116**
Residential Meter Stacks	**V1-T4-118**
1MP, 1MM and 3MM Main Tenant Circuit Breakers	
Phase Balanced Stack	**V1-T4-128**
Commercial Meter Stack Modules	**V1-T4-129**
35MM, 37MM, 35SS and 37SS Main Tenant Circuit Breakers	**V1-T4-136**

1MP, 1MM and 3MM Main Tenant Circuit Breakers

Product Description

Specific main tenant circuit breakers that are to be used in meter packs (1MP), residential meter stacks (1MM) and three-phase in single-phase out meter stacks (3MM).

Product Selection

Description	Number of Poles	Main Tenant Circuit Breaker Ampere Rating	10 kAIC Catalog Number ①	22 kAIC Catalog Number	25 kAIC Catalog Number ①②③④	42 kAIC Catalog Number ②③④	65 kAIC Catalog Number ②③④	100 kAIC Catalog Number ②③④
Plug-On Type								
Plug-on type circuit breakers used with 1MP, 1MM, and 3MM 125 A modular metering stacks	2	60	**BR260**	**BRH260**	—	**BRHH260**	**BRX260**	—
	2	70	**BR270**	**BRH270**	—	**BRHH270**	**BRX270**	—
	2	80	**BR280**	**BRH280**	—	**BRHH280**	**BRX280**	—
	2	90	**BR290**	**BRH290**	—	**BRHH290**	**BRX290**	—
	2	100	**BR2100**	**BRH2100**	—	**BRHH2100**	**BRX2100**	—
	2	110	**BR2110**	**BRH2110**	—	**BRHH2110**	**BRX2110**	—
	2	125	**BR2125**	**BRH2125**	—	**BRHH2125**	**BRX2125**	—
Bolt-On Type								
Bolt-on type circuit breakers used with 1MP, 1MM, and 3MM 200 A modular metering stacks	2	60	**CCV2060X**	**CCVH2060X**	**CVS2060XMM**	**CVS2060XMM**	**CV2060XMM**	**CVH2060XMM**
	2	70	**CCV2070X**	**CCVH2070X**	**CVS2070XMM**	**CVS2070XMM**	**CV2070XMM**	**CVH2070XMM**
	2	80	**CCV2080X**	**CCVH2080X**	**CVS2080XMM**	**CVS2080XMM**	**CV2080XMM**	**CVH2080XMM**
	2	90	**CCV2090X**	**CCVH2090X**	**CVS2090XMM**	**CVS2090XMM**	**CV2090XMM**	**CVH2090XMM**
	2	100	**CCV2100X**	—	**CCVH2100X**	**CVS2100XMM**	**CV2100XMM**	**CVH2100XMM**
	2	125	**CCV2125X**	—	**CCVH2125X**	**CVS2125XMM**	**CV2125XMM**	**CVH2125XMM**
	2	150	**CCV2150X**	—	**CCVH2150X**	**CVS2150XMM**	**CV2150XMM**	**CVH2150XMM**
	2	175	**CCV2175X**	—	**CCVH2175X**	**CVS2175XMM**	**CV2175XMM**	**CVH2175XMM**
	2	200	**CCV2200X**	—	**CCVH2200X**	**CVS2200XMM**	**CV2200XMM**	**CVH2200XMM**

Notes

① #2–300 kcmil wire size range for CCV and CCVH tenant main circuit breakers.
② "MM" suffix indicates mounting hardware kit is included as standard with tenant main breaker.
③ 1MMCBK replacement mounting hardware kit. One kit is needed per breaker. Mounting hardware kit ships standard with breaker "MM" suffix offering.
④ #6–4/0 kcmil wire size range for CVS, CV and CVH tenant main circuit breakers. If #2–300 kcmil is needed, order 2TA225CVK. One kit needed per breaker.

Contents

Description	*Page*
Systems for Residential and Commercial Applications	**V1-T4-88**
Meter Packs	**V1-T4-90**
Type CCV 120/240 V Tenant Main Circuit Breaker	**V1-T4-95**
Type CV 120/240 V Tenant Main Circuit Breaker	**V1-T4-96**
Meter Packs—1MP, 1MM and 3MM Main Tenant Circuit Breakers	**V1-T4-98**
Main Service Modules	**V1-T4-101**
Surge Metering	**V1-T4-115**
Group Metering Inline Current Transformer Cabinets	**V1-T4-116**
Residential Meter Stacks	**V1-T4-118**
1MP, 1MM and 3MM Main Tenant Circuit Breakers	**V1-T4-127**
Phase Balanced Stack Commercial Meter Stack Modules	**V1-T4-129**
35MM, 37MM, 35SS and 37SS Main Tenant Circuit Breakers	**V1-T4-136**

Phase Balanced Stack

Product Description

Eaton's Phase Balanced Stack allows for a complete phase balanced metering line-up using fewer stacks. With today's electrical rooms becoming smaller, the need is greater than ever to offer space-saving metering products while providing a fully phase balanced system. The new phase balanced stack is the answer.

Today, achieving a phase balanced system when connected to a 208Y/120 Vac three-phase, four-wire system may require one or two additional 3MM meter modules. Standard 3MM meter stacks come factory connected to phases A and B. The new phase balanced stacks connect the two bottom meters to phases B and C and the top two or three meters to phases A and C. Using these new stacks with the AB phased 3MM metering, phase balancing is accomplished, and more compact than before.

Features

- Available in four- and five-high configurations at 125 A
- 200 A stacks available
- Available with 800 A aluminum bus and 1200 A copper bus
- Ring, ringless, ringless with horn bypass available
- Outdoor enclosure
- Dimensions same as existing 125 A, three-phase meter stacks

Product Selection

Ordering Information

- Check with local utility for height restrictions
- Items loaded in VISTA
- If you have questions, please contact the Technical Resource Center 1-800-356-1243, option 3

Phase Balanced Stack

Amperes Per Meter Socket	Bus Ampacity	Meter Socket Cover	Catalog Number
125	800	Ring	**3MM412RACBC**
125	800	Ring	**3MM512RACBC**
125	800	Ringless	**3MM412RRLACBC**
125	800	Ringless	**3MM512RRLACBC**
125	800	Ringless horn bypass	**3MM412RRLBACBC**
125	800	Ringless horn bypass	**3MM512RRLBACBC**
125	1200	Ring	**3MM412R2ACBC**
125	1200	Ring	**3MM512R2ACBC**
125	1200	Ringless	**3MM412R2RLACBC**
125	1200	Ringless	**3MM512R2RLACBC**
125	1200	Ringless horn bypass	**3MM412R2RLBACBC**
125	1200	Ringless horn bypass	**3MM512R2RLBACBC**

Note: Local codes and utility requirements still apply. The phase balance stacks are not suitable for changing in the field.

Commercial Meter Stack Modules (35MM, 37MM, 35SS and 37SS)

35MM, 37MM, 35SS and 37SS

Contents

Description	*Page*
Systems for Residential and Commercial Applications	**V1-T4-88**
Meter Packs	**V1-T4-90**
Type CCV 120/240 V Tenant Main Circuit Breaker	**V1-T4-95**
Type CV 120/240 V Tenant Main Circuit Breaker	**V1-T4-96**
Meter Packs—1MP, 1MM and 3MM Main Tenant Circuit Breakers	**V1-T4-98**
Main Service Modules	**V1-T4-101**
Surge Metering	**V1-T4-115**
Group Metering Inline Current Transformer Cabinets	**V1-T4-116**
Residential Meter Stacks	**V1-T4-118**
1MP, 1MM and 3MM Main Tenant Circuit Breakers	**V1-T4-127**
Phase Balanced Stack	**V1-T4-128**
Commercial Meter Stack Modules 35MM, 37MM, 35SS and 37SS Main Tenant Circuit Breakers	**V1-T4-136**

Commercial Meter Stack Modules

Product Description

- Heavy-duty lever bypass socket design
- Single-phase or three-phase designs (35 = single-phase, 37 = three-phase)
- Provision for two-pole or three-pole main tenant breakers
- Phase balance kits are included with three-high and four-high modules

Features, Benefits and Functions

A. End Walls

The top cap is removable and does not contain knockouts, so contractors can position and punch holes where they need them. There are numerous KOs in the back and bottom for flexibility.

B. Ground Bars

The factory-installed equipment ground bars are provided in both the top and bottom gutters.

C. Meter Socket

The 5-jaw meter socket and 7-jaw meter socket includes a built-in manual bypass and jaw release. The ground wire is factory connected in both 35MM and 37MM modules.

D. Separate Wireway Cover

If work on the breakers or cables is necessary, it can be accomplished without disturbing the meters or meter covers, thanks to a separate cover that allows easy access to the module's main tenant breaker and wireway section. (Not shown.)

E. Barrier

A solid metal barrier separates the meter socket section from the tenant breaker in the wireway section. The unmetered vertical bus is enclosed to guard against power theft.

F. Neutral Assembly

Located in the wireway of each module, the assembly permits convenient termination of the neutral conductors.

G. Enclosed Horizontal Bus

Non-removable metal barrier encloses 1200 A horizontal bus when passing through the tenant breaker section for added security.

H. Tenant Breaker Range

All modules accept 15–225 A bolt-on breakers in various AIC ratings. The CHH_X breaker carries a UL listed series rating of 100,000 A, which allows you to use standard 10 kAIC breakers in downstream loadcenters and panelboards by Eaton.

I. Indoor/Outdoor Construction

Raintight caps, meter covers and lockable raintight tenant breaker covers make it convenient for you to use any of our modules on either NEMA 1 or NEMA 3R applications.

J. Mounting Rail

Rear mounting rail and wall hanger speed and simplify installation. (Mounting rail not shown.)

K. Nameplate and Ratings

The nameplate gives you full rating data: 208Y/120, three-phase, four-wire; 240/120, three-phase, four-wire delta (high leg on B-phase); and 240/120 single-phase. (Not shown.)

L. Mains and Modules

Slip together quickly, smoothly with front-accessible captive bolts securing the juncture without removing socket interiors or bus access plate. Main bus joint bolts torque to 25 foot pounds.

37MM Meter Stack Module

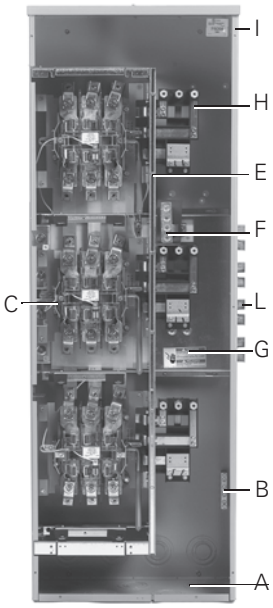

- Eaton's 35MM and 37MM modular metering stacks contain meter sockets with built-in manual bypass and jaw release (Non-EUSERC areas)
- Eaton's 35SS and 37SS stacks use meter sockets with test bypass feature (meets EUSERC electrical requirements)
- All commercial modular metering stacks contain four horizontal cross buses
- Mechanically and electrically built to bolt-up with main service modules and residential modular metering stacks

Catalog Number Selection

Commercial Meter Stack Modules

3 7 MM 1 40 R 12 40 K C

Phases
Three-phase only

Number of Jaws
5 or **7**

Type of Metering
MM = Commercial metering module
SS = Safety socket—EUSERC

Number of Meters
1, **2**, **3** or **4**

Socket Amperage
20 = 200 A
40 = 400 A

Enclosure
R = NEMA 3R

Bus
12 = 1200 A main bus ampacity
AB = Phases A&B—EUSERC
AC = Phases A&C—EUSERC
BC = Phases B&C—EUSERC

Tenant Breakers
40 = 400 A included
Blank = Ordered separately

Socket Type
K = K Base bolt-on socket
Blank = Plug-in type socket

Bus
C = Copper
Blank = Aluminum

When Ordering:

1. Determine catalog number of Main Service Module.
2. Determine catalog number of Meter Stack (Residential or Commercial).
3. Find quantity and catalog numbers for tenant circuit breakers (found on **Page V1-T4-136**). Order one breaker per socket.
4. If any accessories are needed, order from **Pages V1-T4-138** and **V1-T4-139**.

Product Selection

35MM

- Each socket is a 5 terminal block with lever bypass and jaw release
- Ringless covers
- Provision for two-pole main tenant breakers (circuit breakers not included). For circuit breaker catalog numbers, refer to **Page V1-T4-136**
- Phase balancing kits are included with three-high and four-high modules. Each individual socket can be phase balanced in the field to the desired lines (A-B, B-C or A-C). Comes from factory as A-B
- Indoor/outdoor construction
- Main tenant feeders can exit top, bottom or back
- If being used in outdoor application and exiting the top, mount Myer type hubs on rainproof cap
- Short-circuit ratings up to 100 A rms symmetrical depending upon the kAIC rating of installed main tenant circuit breakers and main device
- Non-EUSERC areas

35MM—Single-Phase Commercial Meter Stack Modules (Three-Phase In, Single-Phase Out)

System Voltage	Ampere Rating Per Meter Socket	Number of Meter Sockets	Horizontal Bus Ampacity/ Material	Number of Jaws Per Meter Socket	Main Tenant Breaker Type (Page V1-T4-136) ①	Catalog Number
120/240 V, single-phase, three-wire systems and 208Y/120 V network metering (Not suitable for use on three-phase, four-wire delta systems)	225	1	1200 Al	5	Bolt-on type EHD2_ CCV2_X CCVH2_X CVS2_XMM CV2_XMM CVH2_XMM	**35MM120R12**
		1	1200 Cu	5		**35MM120R12C**
		2	1200 Al	5		**35MM220R12**
		2	1200 Cu	5		**35MM220R12C**
		3	1200 Al	5		**35MM320R12**
		3	1200 Cu	5		**35MM320R12C**
		4	1200 Al	5		**35MM420R12**
		4	1200 Cu	5		**35MM420R12C**
	400	1	1200 Al	5	400 A K-Frame included	**35MM140R1240** ②
		1	1200 Cu	5		**35MM140R1240C** ②
	400	1	1200 Al	5	400 A K-Frame included	**35MM140HR1240** ③
		1	1200 Cu	5		**35MM140HR1240C** ③
	400	2	1200 Al	5	400 A K-Frame included	**35MM240R1240**
		2	1200 Cu	5		**35MM240R1240C**
	400 continuous	1	1200 Cu	5	400 A L-Frame included	**35MM140R1240K**
	400 continuous	1	1200 Cu	5	400 A L-Frame included	**35MM140HR1240KC** ④

Notes

① Retrofit tenant circuit breaker mounting kit (**37MMRCBK**) for installation of Type EHD and CV breakers. Needed only for stacks manufactured prior to February 2013. Order one kit per breaker.
② Unit is bottom exit only.
③ Rated at 100 kAIC.
④ Rated at 35 kAIC.

37MM

- Each socket is a 7 terminal block with lever bypass and jaw release
- Ringless covers
- Provision for three-pole main tenant breakers (circuit breakers not included). For circuit breaker catalog numbers, refer to **Page V1-T4-136**
- Indoor/outdoor construction
- Main tenant breakers can exit top, bottom or back
- If being used in outdoor application and exiting the top, mount Myer type hubs on rainproof cap
- Short-circuit ratings up to 100 A rms symmetrical depending upon the kAIC rating of installed main tenant circuit breakers and main device
- Non-EUSERC areas

37MM—Three-Phase Commercial Meter Stack Modules (Three-Phase In, Three-Phase Out)

System Voltage	Ampere Rating Per Meter Socket	Number of Meter Sockets	Horizontal Bus Ampacity/ Material	Number of Jaws Per Meter Socket ①	Main Tenant Breaker Type ② (Page V1-T4-136)	Catalog Number
208Y/120 V, three-phase, four-wire 240/120 V, three-phase, four-wire delta (B-phase is high leg)	225	1	1200 Al	7	Bolt-on type EHD3_ CC3_X CVS3_X CV3_X CVH3_X	**37MM120R12**
		1	1200 Cu	7		**37MM120R12C**
		2	1200 Al	7		**37MM220R12**
		2	1200 Cu	7		**37MM220R12C**
		3	1200 Al	7		**37MM320R12**
		3	1200 Cu	7		**37MM320R12C**
		4	1200 Al	7		**37MM420R12**
		4	1200 Cu	7		**37MM420R12C**
	400	1	1200 Al	7	Bolt-on type EHD3_ CC3_X CVS3_X CV3_X CVH3_X	**37MM140R12** ③
		1	1200 Cu	7		**37MM140R12C** ③
	400	1	1200 Al	7	400 A K-Frame included	**37MM140R1240** ④
		1	1200 Cu	7		**37MM140R1240C** ④
	400	1	1200 Al	7	400 A K-Frame included	**37MM140HR1240** ⑤
		1	1200 Cu	7		**37MM140HR1240C** ⑤
	400	2	1200 Al	7	400 A K-Frame included	**37MM240R1240**
		2	1200 Cu	7		**37MM240R1240C**
	400 continuous	1	1200 Cu	7	400 A L-Frame included	**37MM140R1240KC** ⑥
	400 continuous	1	1200 Cu	7	400 A L-Frame included	**37MM140HR1240KC** ⑦

Notes

① If a socket in a 37MM meter stack module needs to be single-phase, order **37MM1CK**. This will convert the three-phase socket to single-phase.
② Retrofit tenant circuit breaker mounting kit (**37MMRCBK**) for installation of Type EHD and CV breakers. Needed only for stacks manufactured prior to February 2013. Order one kit per breaker.
③ 320 A continuous rated socket with provisions for two main tenant breakers.
④ Unit is bottom exit only.
⑤ Rated at 100 kAIC.
⑥ Rated at 25 kAIC.
⑦ Rated at 35 kAIC.

35SS

- Sockets include EUSERC required test-bypass-disconnect feature
- Ring type covers
- Single-phase units have provisions for two-pole main tenant breakers
- When applying 35SS (single-phase) stacks on 208Y/120 V, three-phase, four-wire and 240/120 V, three-phase, four-wire delta systems, refer to suffixes for proper phase balancing. Each meter stack module is phase balanced at the plant (A-B, B-C or A-C) and cannot be field modified
- Indoor/outdoor construction
- Main tenant breakers can exit top, bottom or back. If being used in outdoor application and exiting the top, mount Myer type hubs on rainproof cap
- Short-circuit ratings up to 100 A rms symmetrical depending upon the kAIC rating of installed main tenant circuit breakers and main device

35SS_

35SS—Three-Phase Commercial Meter Stack Modules ①

System Voltage	Ampere Rating Per Meter Socket	Number of Meter Sockets	Horizontal Bus Ampacity/ Material	Number of Jaws Per Meter Socket	Main Tenant Breaker Type ② (Page V1-T4-136)	Catalog Number
120/240 V, single-phase, three-wire systems and 208Y/120 V network metering (Not suitable for use on three-phase, four-wire delta systems)	225	1	1200 Al	5	Bolt-on type EHD2_ CCV2_X CCVH2_X CVS2_X CV2_X CVH2_X	**35SS120RAB** ③
			1200 Cu	5		**35SS120RABC** ③
			1200 Al	5		**35SS120RAC** ③
			1200 Cu	5		**35SS120RACC** ③
			1200 Al	5		**35SS120RBC** ③
			1200 Cu	5		**35SS120RBCC** ③
		2	1200 Al	5		**35SS220RAB** ③
			1200 Cu	5		**35SS220RABC** ③
			1200 Al	5		**35SS220RAC** ③
			1200 Cu	5		**35SS220RACC** ③
			1200 Al	5		**35SS220RBC** ③
			1200 Cu	5		**35SS220RBCC** ③
		3	1200 Al	5		**35SS320RAB** ③
			1200 Cu	5		**35SS320RABC** ③
			1200 Al	5		**35SS320RAC** ③
			1200 Cu	5		**35SS320RACC** ③
			1200 Al	5		**35SS320RBC** ③
			1200 Cu	5		**35SS320RBCC** ③

37SS

- Sockets include EUSERC required test-bypass-disconnect feature
- Ring type covers
- Three-phase units have provisions for three-pole main tenant breaker
- Aluminum horizontal bus supplied as standard

37SS—Three-Phase Commercial Meter Stack Modules ①

System Voltage	Ampere Rating Per Meter Socket	Number of Meter Sockets	Horizontal Bus Ampacity/ Material	Number of Jaws Per Meter Socket	Main Tenant Breaker Type ② (Page V1-T4-136)	Catalog Number
208Y/120 V, three-phase, four-wire 240/120 V, three-phase, four-wire delta (B-phase is high leg)	225	1	1200 Al	7	Bolt-on type EHD3_ CC3_X CVS3_X CV3_X CVH3_X	**37SS120R**
			1200 Cu	7		**37SS120RC**
		2	1200 Al	7		**37SS220R**
			1200 Cu	7		**37SS220RC**
		3	1200 Al	7		**37SS320R**
			1200 Cu	7		**37SS320RC**

Notes

① Reference drawing EUSERC DWG-304 for 100 A; Reference drawing EUSERC DWG-305 for 200 A.

② Retrofit tenant circuit breaker mounting kit (**37MMRCBK**) for installation of Type EHD and CV breakers. Needed only for stacks manufactured prior to February 2013. Order one kit per breaker.

③ Last two digits of catalog number indicate phase balancing (AB indicates all sockets in this stack are connected to phases A and B only).

Approximate Dimensions in Inches (mm)

Commercial Stacks (35MM and 37MM)

35MM and 37MM

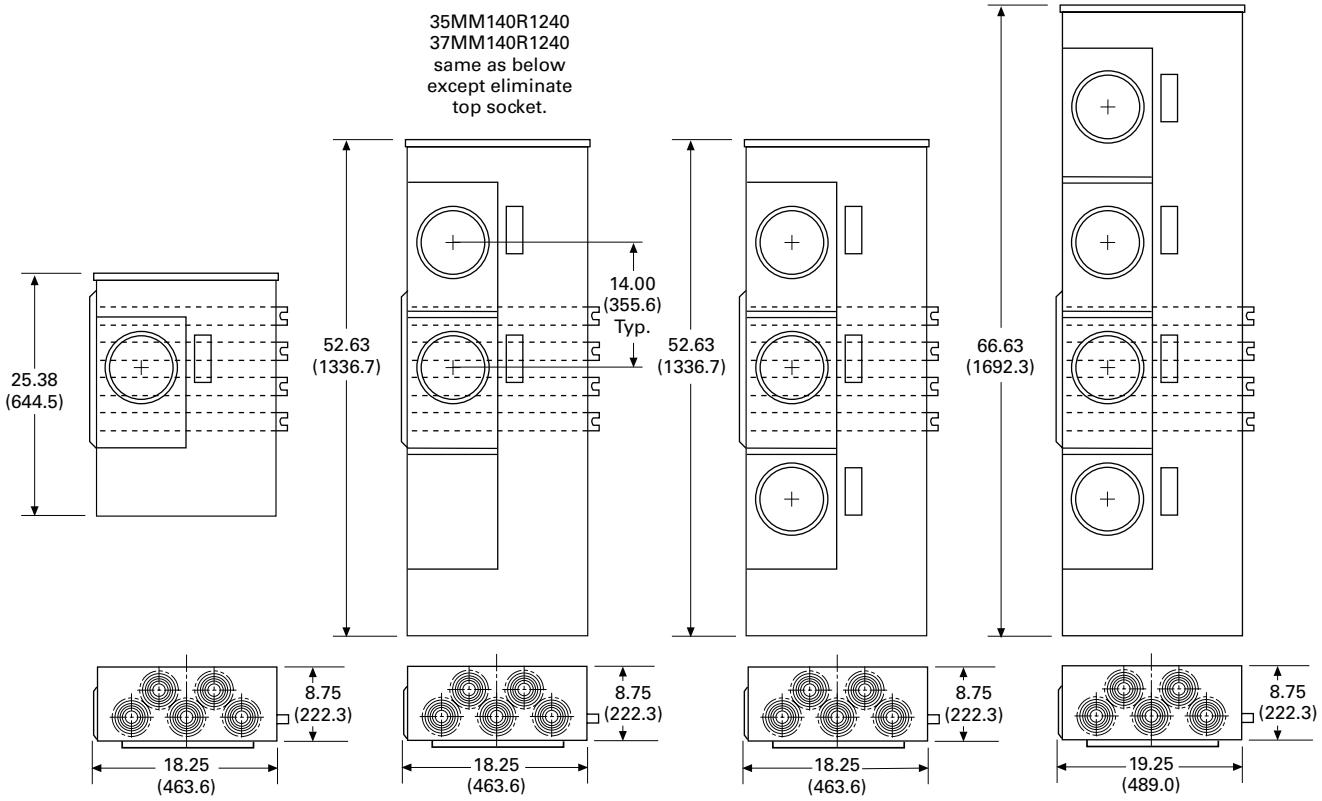

Approximate Dimensions in Inches (mm)

Commercial Stacks (35SS and 37SS)

35SS and 37SS

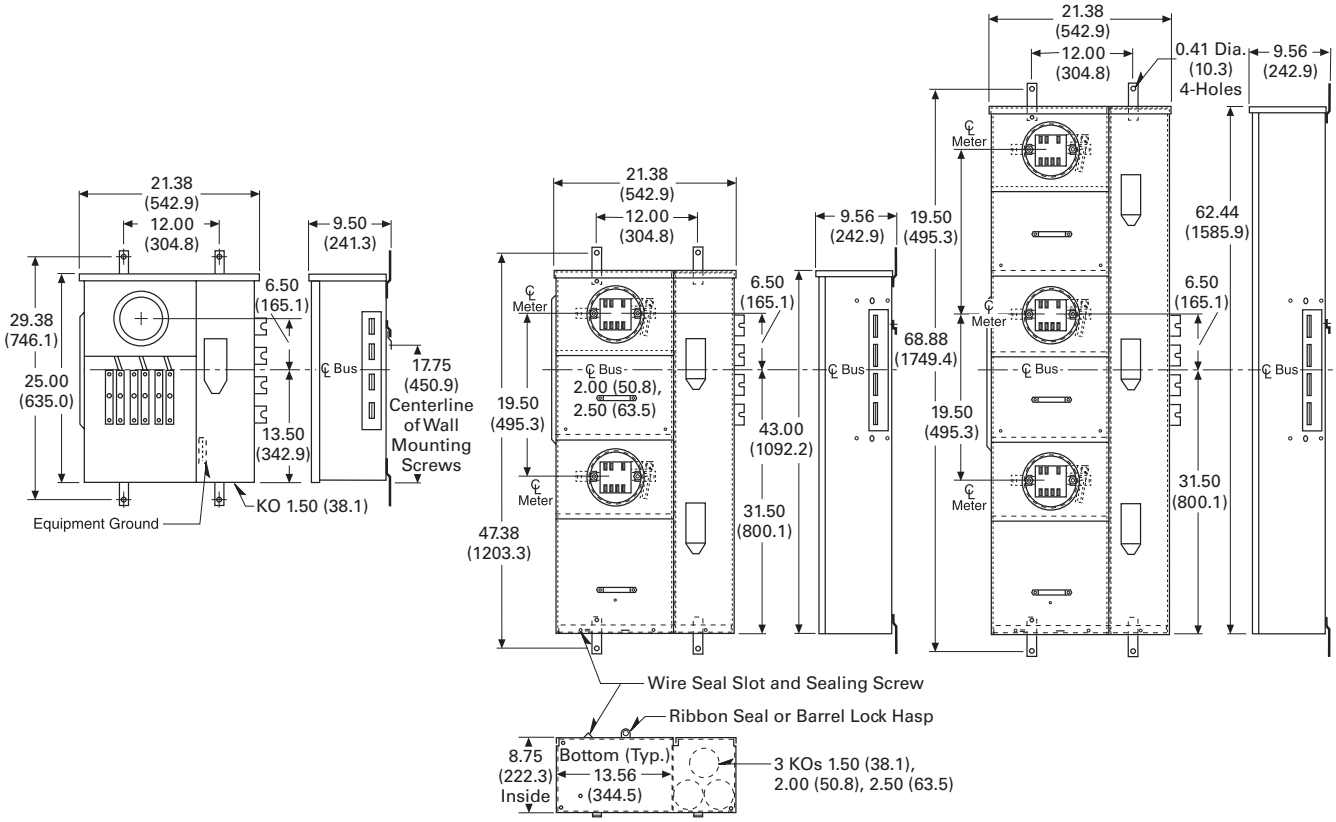

35MM, 37MM, 35SS and 37SS Main Tenant Circuit Breakers

CV2200/CV3200

Contents

Description	*Page*
Systems for Residential and Commercial Applications	**V1-T4-88**
Meter Packs	**V1-T4-90**
Type CCV 120/240 V Tenant Main Circuit Breaker	**V1-T4-95**
Type CV 120/240 V Tenant Main Circuit Breaker	**V1-T4-96**
Meter Packs—1MP, 1MM and 3MM Main Tenant Circuit Breakers	**V1-T4-98**
Main Service Modules	**V1-T4-101**
Surge Metering	**V1-T4-115**
Group Metering Inline Current Transformer Cabinets	**V1-T4-116**
Residential Meter Stacks	**V1-T4-118**
1MP, 1MM and 3MM Main Tenant Circuit Breakers	**V1-T4-127**
Phase Balanced Stack	**V1-T4-128**
Commercial Meter Stack Modules	**V1-T4-129**
35MM, 37MM, 35SS and 37SS Main Tenant Circuit Breakers	

35MM, 37MM, 35SS and 37SS Main Tenant Circuit Breakers

Product Description

- The following breakers are to be used on 35MM, 37MM, 35SS and 37SS modular metering stacks
- Series rating information available on **Pages V1-T4-144** through **V1-T4-147**
- Two-pole breakers are 120/240 Vac, field installed
- Three-pole breakers are 208Y/120 Vac, field installed

Product Selection

35MM, 37MM, 35SS and 37SS Main Tenant Circuit Breakers

Description	Number of Poles	Main Tenant Circuit Breaker Ampere Rating	10 kAIC Catalog Number	25 kAIC Catalog Number ①②	42 kAIC Catalog Number ①②	65 kAIC Catalog Number ①②	100 kAIC Catalog Number ①②
Bolt-On Type							
Bolt-on type circuit breakers used with 35MM and 35SS (single-phase modular metering stacks) ③④	2	60	**CCV2060X**	**CCVH2060X**	**CVS2060XMM**	**CV2060XMM**	**CVH2060XMM**
	2	70	**CCV2070X**	**CCVH2070X**	**CVS2070XMM**	**CV2070XMM**	**CVH2070XMM**
	2	80	**CCV2080X**	**CCVH2080X**	**CVS2080XMM**	**CV2080XMM**	**CVH2080XMM**
	2	90	**CCV2090X**	**CCVH2090X**	**CVS2090XMM**	**CV2090XMM**	**CVH2090XMM**
	2	100	**CCV2100X**	**CCVH2100X**	**CVS2100XMM**	**CV2100XMM**	**CVH2100XMM**
	2	125	**CCV2125X**	**CCVH2125X**	**CVS2125XMM**	**CV2125XMM**	**CVH2125XMM**
	2	150	**CCV2150X**	**CCVH2150X**	**CVS2150XMM**	**CV2150XMM**	**CVH2150XMM**
	2	175	**CCV2175X**	**CCVH2175X**	**CVS2175XMM**	**CV2175XMM**	**CVH2175XMM**
	2	200	**CCV2200X**	**CCVH2200X**	**CVS2200XMM**	**CV2200XMM**	**CVH2200XMM**
	2	225	**CCV2225X**	**CCVH2225X**	**CVS2225XMM**	**CV2225XMM**	**CVH2225XMM**
Bolt-On Type							
Bolt-on type circuit breakers used with 37MM and 37SS (three-phase modular metering stacks) ③④	3	60	**EHD3060**	**CVS3060X**	**CVS3060X**	**CV3060X**	**CVH3060X**
	3	70	**EHD3070**	**CVS3070X**	**CVS3070X**	**CV3070X**	**CVH3070X**
	3	80	**EHD3080**	**CVS3080X**	**CVS3080X**	**CV3080X**	**CVH3080X**
	3	90	**EHD3090**	**CVS3090X**	**CVS3090X**	**CV3090X**	**CVH3090X**
	3	100	**CC3100X**	**CVS3100X**	**CVS3100X**	**CV3100X**	**CVH3100X**
	3	125	**CC3125X**	**CVS3125X**	**CVS3125X**	**CV3125X**	**CVH3125X**
	3	150	**CC3150X**	**CVS3150X**	**CVS3150X**	**CV3150X**	**CVH3150X**
	3	175	**CC3175X**	**CVS3175X**	**CVS3175X**	**CV3175X**	**CVH3175X**
	3	200	**CC3200X**	**CVS3200X**	**CVS3200X**	**CV3200X**	**CVH3200X**
	3	225	**CC3225X**	**CVS3225X**	**CVS3225X**	**CV3225X**	**CVH3225X**

Notes

① #6–4/0 kcmil wire size range for CVS, CV and CVH tenant main circuit breakers. If #2–300 kcmil is needed, order **2TA225CVK** (two-pole) **3TA225CVK** (three-pole). One kit is needed per breaker.

② "MM" suffix provides mounting hardware needed for 1MP, 1MM and 3MM modular metering stacks only. Mounting hardware is not needed for use in 35MM and 35SS modular metering stacks, but is included as standard with breakers.

③ Retrofit tenant circuit breaker mounting kit (**37MMRCBK**) for installation of Type EHD and CV breakers. Needed only for stacks manufactured prior to February 2013. Order one kit per breaker.

④ Type EHD main tenant circuit breakers are also available from 15 to 50 A.

Accessories

1MP, 1MM and 3MM Modular Metering Stacks

	Description	Application	Catalog Number
Fifth Jaw Kit	Fifth jaw kit	Bolted onto neutral in the 3, 6 or 9 o'clock position. Typically used on network metering systems (three-phase in/single-phase out) or when specified by utility company.	**1MM5JK**
	Isolated fifth jaw kit	Connects to the neutral with an insolated wire.	**1MM5JKOP**
Manual Bypass Kit	Manual bypass kit (ring style socket only)	For use with 125 A sockets only. (Not top socket.)	**1MMBPM125**
		For use with 200 A sockets only. (Not top socket.)	**1MMBPM200**
		This kit only to be used for top position of two- and three-high 125 A 1MM and 3MM stacks and of 2, 5 and six-position 125 A 1MP packs.	**1MMBPM125T**
		This kit only to be used for top position of 200 A two-position 1MP packs.	**1MMBPM200T**
Horn Bypass Kit	Horn bypass	Used only on ringless cover stacks, kits can be installed on 125 A or 200 A sockets.	**1MMBPH**
		Note: For **1MP2122RRL** use:	**WCG8HB** ①
	Meter bypass jumper	Installed on 125 A or 200 A sockets. Jumpers are plugged into jaws. Order Lexan® cover plate with bypass jumpers to prevent access to meter socket once energized. (Not UL listed.)	**1MMBPJ**
Lexan Blank Cover	Lexan blank cover	Circular cover mounted on ring or ringless devices preventing access to meter socket while meter is not in place. Includes four plastic tabs that plug into each jaw.	**1MMPCP**
		Same as **1MMPCP** minus the tabs located in the back to plug into jaws. This device to be used while meter bypass jumpers are in place (**1MMBPJ**).	**1MMACP**
	Blank meter socket cover	Used for 125 A stacks. Fits bottom socket only. Kit replaces existing meter cover preventing access to meter socket. Includes hasp for seal.	**1MMBC125B**
		Used on 200 A stacks. Fits bottom socket only. Kit replaces existing meter cover preventing access to meter socket. Includes hasp for seal.	**1MMBC200B**
Wall Mounting Rail	Wall mounting rail	Rails are 4 feet (1.2m) in length. Bolted on wall for stacks, packs and mains to be hung.	**1MMWB**
Bussed Spacer	Bussed spacer	Bussed spacer 1200 A 4-inch (101.6 mm). Required when stacks are mounted on right-hand side in EUSERC areas. (copper)	**3MMBSK** ②
	Bus duct riser/ meter center connection	Available in 400, 600, 800 A main fusible units only. Contact product line for details.	—

Notes

① WCG8HB only applies to meter packs built prior to 1998. Current meter packs use **1MMBPH**.

② Must be used when mounting MCB main next to an MTB main or another MCB main device.

Accessories for 1MP, 1MM and 3MM Modular Metering Stacks, continued

Indoor Corner Elbow

Standard Sealing Ring

Description	Application	Catalog Number
Indoor corner elbow (copper)	12-inch (304.8 mm) indoor corner elbow, 1200 A, three-phase, four-wire for use with 1MM and 3MM only. **Do not use with 35MM, 37MM, 35SS or 37SS stacks.** 12-inch corner elbow not EUSERC approved.	**3MMEB12**
Indoor corner elbow (copper)	16-inch (406.4 mm) indoor corner elbow, 1200 A, three-phase, four-wire for use with 1MM, 3MM, 35MM, 37MM, 35SS and 37SS.	**3MMEB16**
Barrier	Barrier for individual sockets	**1MMBK**
Meter jumper and cover	Combination meter jumper and cover (200 A maximum). Used to jumper line and load jaws as well as cover meter socket preventing exposure to current carrying parts.	**1MMJCK**
Lug block	125 A two-pole lug block assembly.	**BRSF125**
Sealing ring	Stainless steel screw type with brass screw	**1MMSR1**
	Standard (included with packs and stacks) ①	**1MMSR2**
	Stainless steel screw type with cast zinc screw	**1MMSR4**
	Aluminum screw type with locking provisions	**1MMSR5**
Top endwall	125 A, NEMA 1 top end wall with knockouts for 1MM, 3MM meter stacks	**MM12N1WLK**
	200 A, NEMA 1 top end wall for 1MM, 3MM meter stacks	**MM20N1WLK**

Note

① Aluminum Snap Type.

Renewal Parts

1MP, 1MM and 3MM Replacement Parts

	Description	Application	Catalog Number
Ringless Cover	Ringless cover (can install this to go from ring to ringless)	Installed on 125 A socket for ringless security	**1MMRC125**
		Installed on 200 A socket for ringless security	**1MMRC200**
		For use with top position of 125 A, two- and three-position,1MM and 3MM stacks and two-, five- and six-position 1MP packs	**1MMRC125T**
		Top-position two position IMP	**1MMRC200T**
Ring Cover	Ring cover	Installed on 125 A socket for ring security	**1MMCP1**
		Installed on 200 A socket for ring security	**1MMCP2**
		Top socket ring cover 125 A	**1MMCP1T**
		Top socket ring cover 200 A	**1MMCP2T**
Tenent Breaker Cover	Tenant breaker hinged cover	125 A cover	**1MMBC1**
		200 A cover	**1MMBC2**
Meter Socket	Meter socket ①	125 and 200 A	**1MMMS**
	Busbar end cap	Flat—left side	**47-24139A**
		Bump—right side	**47-28172-2A**
	Main circuit breaker cover kit (black)		**49-7060**

Notes

① Meter Packs **1MP2122RRL** and **1MP2122RRLB** use different meter sockets. See Renewal Parts listing RP.32A.01A.T.E for details.

See **RP00501001E** for a complete Renewal Parts listing.

Accessories for 35MM and 37MM Modular Metering Stacks

	Description	Application	Catalog Number
	Wall mounting rail	Rails are 4 feet (1.2m) in length. Bolted on wall for stacks, packs and mains to be hung.	**1MMWB**
	Indoor corner elbow (copper)	16-inch (406.4 mm) indoor corner elbow, 1200 A, three-phase, four-wire for use with 1MM, 3MM, 35MM, 37MM, 35SS and 37SS.	**3MMEB16**
	Handle insulator	Each meter block includes a lever bypass. This kit includes the sleeve which slides onto the lever handle.	**37MMHC**
Barrel Lock Bracket Kit	Barrel lock bracket kit	Needed when using barrel lock security.	**37MMBLK**
Totalizing Jumper Kit	Totalizing jumper kit	Used if one socket is to meter two tenant feeds. When ordering jumper kit, should also order a plastic cover plate (**1MMPCP + IMMJCK**) preventing access to live parts on unused socket.	**37MMTJK**
Type EHD and CV Breaker Retrofit Mounting Kit	Type EHD and CV breaker retrofit mounting kit	Retrofit mounting hardware for installation of Type EHD and CV breakers in 35MM, 37SS, 37MM and 37SS meter stacks manufactured prior to February 2013. Order one kit per breaker.	**37MMRCBK**
Type CV Breaker Mounting Kit	Type CV breaker mounting kit	Replacement Type CV breaker mounting hardware kit. Used in 200 A 1MP/1MM/3MM modular metering stacks at 42, 65 and 100 kAIC.	**1MMCBK**
Blank Cover Kit	Blank cover kit	Kit replaces meter cover preventing access to socket.	**37MMCK** ①
			37MMCKA ②
	Barrier	Barrier for individual sockets	**37MMBK**
Three-Phase to Single-Phase Conversion Kit	Three-Phase to single-phase conversion kit	This kit will convert one three-phase meter socket (37MM devices) to a single-phase socket. Only needed if phasing A-C or C-B. If single-phase socket is to be phased A-B, kit is not required for field conversion. (Must use three-phase breaker.)	**37MM1CK**
	Bus duct riser/meter center connection	Available in 400, 600, 800 A Main fusible units and 400, 600, 800, 1000, 1200 main circuit breaker. Contact product line for details.	—
	Anti-inversion clip	This clip should be inserted into upper right hand jaw of a 320 A meter socket. The purpose is prevent a 200 A meter from being inserted into a 320 A meter socket.	**37MMINVCLIP**

Notes

① For all units made 10/2002 and earlier.

② For all units made after 11/2002.

Renewal Parts

35MM and 37MM Modular Metering Stacks

	Description	Application	Catalog Number
35MM Replacement Meter Socket	35MM replacement meter socket	To replace meter socket with lever bypass and jaw release.	**MSLMSA1**
	37MM replacement meter socket	To replace meter socket with lever bypass and jaw release.	**MSLMSA2**
37SS Replacement Meter Socket	35SS replacement meter socket	To replace meter socket with test bypass disconnect feature	**MSTMSA1**
	37SS replacement meter socket	To replace meter socket with test bypass disconnect feature	**MSTMSA2**
	Safety socket meter cover assembly	To replace ring type cover over the meter prior to 7/1/02.	**MSTMCVR1**
	Safety socket meter cover assembly	To replace ring type cover over the meter after 7/1/02	**MSTMCVR1E**
Meter Cover Assembly 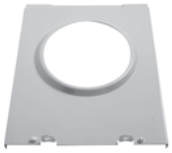	35MM and 37MM meter cover assembly	Prior to 12/1/02	**37MMSK**
		After 12/1/02	**37MMSK1**
	Meter cover assembly with NJ latch	To replace ringless cover over the meter. Includes New Jersey latch requirement.	**37MMSKNJ**
	Tenant breaker hinged cover	To replace cover over tenant breakers.	**1MMBC2**
	Busbar end cap	Flat—left side	**47-24139A**
		Bump—right side	**47-28172-2A**
	Main circuit breaker cover/CIT (black)		**49-7060**

Note

See **RP.32A.01.T.E** for a complete Renewal Parts listing.

Technical Data and Specifications

Phase Balancing

All 3MM meter modules come factory connected to phase A and B, per Figure A. When connected to a 208Y/120 Vac three-phase, four-wire system, field phase balancing of two out of every three stacks is required. One of every three stacks should be phased AC, per Figure B, and one of every three stacks should be phased CB, per Figure C.

Examples:

Nine Total Positions—use (three) three-position stacks and phase one per Figure B (A-C phasing) and one per Figure C (C-B phasing).

16 Total Positions—use (two) five-position and (two) three-position stacks. Phase balance (one) five-position per Figure B (A-C phasing) and (one) five-position per Figure C (C-B phasing).

19 Total Positions—where four-position maximum height is allowed by utility. Use (one) four-position and (five) three-position stacks. Phase balance (two) three-position stacks per Figure B (A-C phasing) and (two) three-position stacks per Figure C (C-B phasing).

"Z" Shaped and "Barrel" Shaped Phase Connector

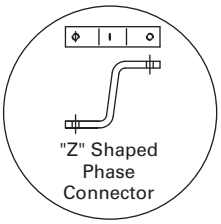

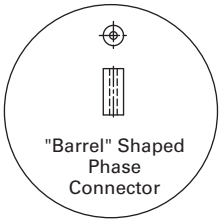

Phase Balancing

	125 A STACKS	200 A STACKS
FIGURE A	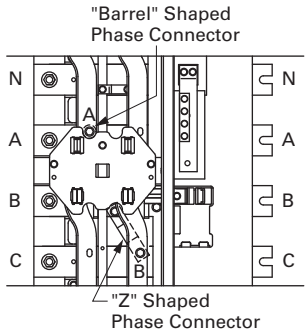 **FACTORY 125 A A-B PHASING**	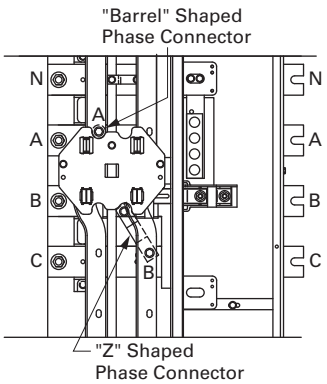 **FACTORY 200 A A-B PHASING**
FIGURE B	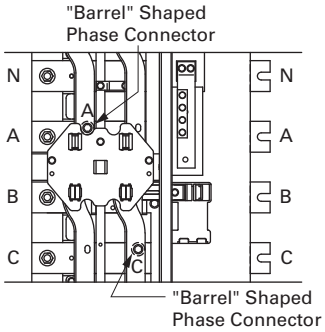 **FIELD 125 A A-C PHASING** Remove "Z" Phase Jumper from "B" Phase Horizontal Bus Replace with "Barrel" Phase Jumper from kit 99-4184 Supplied with Meter Stack and attach to "C" Phase Bus as shown. Torque to 60 lb-in (6.78 N-M) Retain "Z" Phase Jumper for future use.	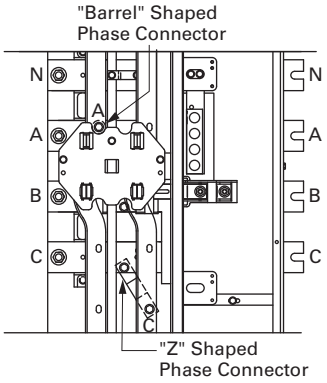 **FACTORY 200 A A-C PHASING** Remove "Z" Phase Jumper from "B" Phase Horizontal Bus Reattached at "C" Phase Horizontal Bus as Shown. Torque to 60 lb-in (6.78 N-M)
FIGURE C	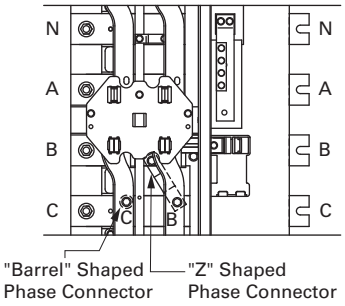 **FIELD 125 A C-B PHASING** Remove "Barrel" Phase Jumper from "A" Phase Horizontal Bus Reattached at "C" Phase Horizontal Bus as shown. Torque to 60 lb-in (6.78 N-M)	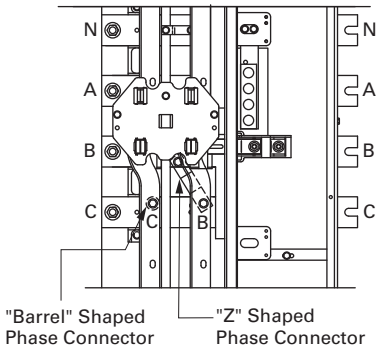 **FACTORY 200 A C-B PHASING** Remove "Barrel" Phase Jumper from "A" Phase Horizontal Bus Reattached at "C" Phase Horizontal Bus as shown. Torque to 60 lb-in (6.78 N-M)

Series Combination Short-Circuit Ratings

When main tenant breakers are installed in Eaton's modular metering stack per the table on **Page V1-T4-145**, the branch breakers installed in downstream panel rated 10 kAIC or greater are protected to the listed series AIC rating. Refer to the downstream panel marking for the proper series combination short-circuit ratings.

Replacement or additional breakers shall be of the same manufacture and type, and shall have an interrupting rating equal to or greater than the interrupting rating of any main tenant breaker installed.

Series Combination Short-Circuit Ratings

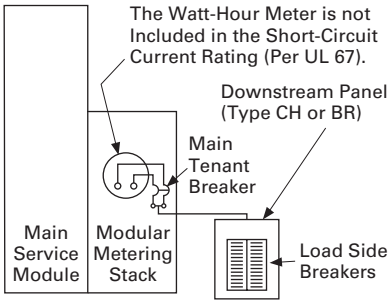

Series Combination Short-Circuit Ratings—240 Vac

Main Module Overcurrent Device Breaker Type or Class Fuse	System AIC Rating 120/240 Vac Maximum	Meter Module Tenant Feeder Breaker Type 1MM, 3MM, 35MM, 37MM, 35SS, 37SS or Loadcenter Main Breaker	Tenant Feeder Breaker Short-Circuit Rating	Loadcenter Branch Breaker (Single-, Two- or Three-Pole)
None	10,000	None	—	BD, BR, BRD, BQ, BQC, GFCB, CH, CHT, BRCAF, CHFCAF, CHF, CH-GFCI
Without main disconnect. Cable tap box Type 1MTB_, 3MTB_	10,000	BR_, CC_, BW_, CCV_	10,000	
	22,000	BRH_	22,000	
	25,000	CSR_, CHH_H2, CCVH_	25,000	
	42,000	BRHH_, CHH_H4, CVS_	42,000	
	65,000	BRX_, CV_, KD_, HKD_	65,000	
	100,000	CHH_, CVH_, KDC_	100,000	
Main switch module Type 1MFS_, 3MFS_ with Class T fuse, 400 A maximum	42,000	BRH_	22,000	CH, CHT, CH3, CH-GFCI
Main switch module Type 1MFS_, 3MFS_ with Class T fuse, 600 A maximum	100,000	BRH_	22,000	BD, BR, BRD, BQ, BQC, GFCB
Main switch module Type 1MFS_, 3MFS_ with Class T fuse, 1200 A maximum	10,000	BR_, CC_, BW_, CCV_	10,000	BD, BR, BRD, BQ, BQC, GFCB, CH, CHT, BRCAF, CHFCAF, CHF, CH-GFCI
	22,000	BRH_	22,000	
	25,000	CSR_, CHH_H2, CCVH_	25,000	
	42,000	BRHH_, CHH_H4, CVS_	42,000	
	65,000	BRX_, CV_, KD_, HKD_	65,000	
	100,000	CHH_, CVH_, KDC_	100,000	
Main switch module Type 1MFS_, 3MFS_ with Class T fuse, 1200 A maximum	100,000	BRHH_	42,000	BD, BR, BRD, BQ, BQC, GFCB, CH, CHT, BRCAF, CHFCAF, CHF, CH-GFCI
Main switch module Type 1BPS_, 3BPS_ with Class L fuse, 1200–2000 A	10,000	BR_, CC_, BW_, CCV_	10,000	BD, BR, BRD, BQ, BQC, GFCB, CH, CHT, BRCAF, CHFCAF, CHF, CH-GFCI
	22,000	BRH_	22,000	
	25,000	CSR_, CHH_H2, CCVH_	25,000	
	42,000	BRHH_, CHH_H4, CVS_	42,000	
	65,000	BRX_, CV_, KD_, HKD_	65,000	
	100,000	CHH, CVH_, KDC_	100,000	
Main breaker module Type 1MCB_, 3MCB_ with KD, HKD (400 A maximum) LD, HLD (600 A maximum) MDL, HMDL (800 A maximum) ND, NGS, HND, NGH (1200 A maximum) RD, RGH (2000 A maximum)	10,000	BR_, CC_, BW_, CCV_	10,000	BD, BR, BRD, BQ, BQC, GFCB, CH, CHT, BRCAF, CHFCAF, CHF, CH-GFCI
	22,000	BRH_	22,000	
	25,000	CSR_, CHH_H2, CCVH_	25,000	
	42,000	BRHH_, CHH_H4, CVS_	42,000	
	65,000	BRX_, CV_, KD_, HKD_	65,000	
	100,000 ①	CHH_, CVH_, KDC_	100,000	

Note

① 100,000 A rating with 100,000 A rated main.

1MP 125 A Meter Module

This All-in-One Meter Module is UL listed for the short-circuit rating at 240 Vac maximum in rms symmetrical amperes per table below.

1MP 125 A Meter Module

Tenant Breaker Catalog Number Two-Pole	Maximum Ampere Rating	UL Listed Series Short-Circuit Rating
BRX_____	125	65 kAIC
BRHH_____	125	42 kAIC
BRH_____	125	22 kAIC
BR_____	125	10 kAIC

When Type BRX, BRHH or BRH tenant breakers are installed in this meter module, then Eaton's breakers rated 10 kAIC or greater installed on the load side of this meter module may be protected for short circuits up to 22 kAIC with Type BRH breakers, 42 kAIC with Type BRHH or 65 kAIC with Type BRX breakers.

See load side breaker panel marking for proper short-circuit current rating.

1MP 125 A Meter Module

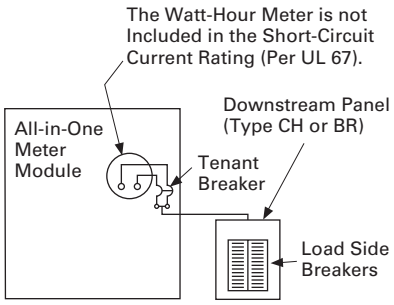

Note: The ratings for both 125 and 200 A tenant positions apply to both Type BR and CH loadcenters and 10 kAIC branch breakers.

1MP 200 A Meter Module

This All-in-One Meter Module is UL listed for the short-circuit rating at 240 Vac maximum in rms symmetrical amperes per table below.

1MP 200 A Meter Module

Tenant Breaker Catalog Number Two- or Three-Pole	Maximum Ampere Rating	UL Listed Series Short-Circuit Rating
CVH_XMM	200	100 kAIC
CV_XMM	200	65 kAIC
CVS_XMM	200	42 kAIC
CCVH_XMM	200	25 kAIC
CCV_X	200	10 kAIC

When Type CV tenant breakers are installed in this meter module, then breakers rated 10 kAIC or greater installed on the load side of this meter module may be protected for short circuits up to 100 kAIC.

See load side breaker panel marking for proper short-circuit current rating.

1MP 200 A Meter Module

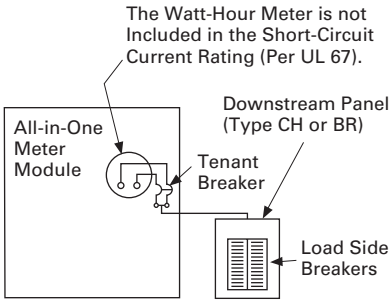

General

When tenant breakers are installed in Eaton's metering modules per the short-circuit current ratings below, the branch breakers installed in downstream panel rated 10 kAIC or greater are protected to the listed series AIC rating. Refer to the downstream panel marking for the proper series combination short-circuit ratings. These ratings apply to both loadcenter Types BR and CH.

The short-circuit rating is limited to the lowest interrupting rating of any tenant breaker installed or to the lowest marked interrupting rating of the main switch, main breaker or main lug modules.

Replacement or additional breakers shall be of the same type and manufacturer, and shall have an interrupting rating equal to or greater than the interrupting rating of any tenant breaker presently installed in the meter module.

1MM, 3MM 125 A Meter Module

When used with main switch, main breaker or main lug modules, this meter module is UL listed for the short-circuit rating at 240 Vac maximum in rms symmetrical amperes per table below.

1MM, 3MM 125 A Meter Module

Tenant Breaker Catalog Number Two-Pole	Amperes Maximum	UL Listed Series Short-Circuit Rating
BRX_____	125	65 kAIC
BRHH_____	125	42 kAIC
BRH_____	125	22 kAIC
BR_____	125	10 kAIC

When Type BRX, BRHH or BRH tenant breakers are installed in this meter module, then breakers rated 10 kAIC or greater installed on the load side of this meter module may be protected for short circuits up to 22 kAIC with Type BRH breakers, 42 kAIC with Type BRHH or 65 kAIC with Type BRX breakers.

See load side breaker panel marking for proper short-circuit current rating.

1MM, 3MM 125 A Meter Module

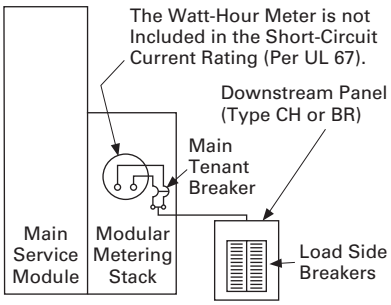

1MM, 3MM, 200 A Meter Modules; 35MM, 37MM, 35SS and 37SS 225 A Meter Modules

When used with main switch, main breaker or main lug modules, these meter modules are UL listed for the short-circuit rating at 240 Vac maximum in rms symmetrical amperes per table below.

1MM, 3MM, 200 A Meter Modules; 35MM, 37MM, 35SS and 37SS 225 A Meter Modules

Tenant Breaker Catalog Number Two- or Three-Pole	Amperes Maximum 1MM 3MM 200 A	Amperes Maximum 35MM, 37MM, 35SS, 37SS 225 A	UL Listed Series Short-Circuit Rating
CVH_XMM	200	225	100 kAIC
CV_XMM	200	225	65 kAIC
CVS_XMM	200	225	42 kAIC
CCVH_X	200	225	25 kAIC
CCV_X	200	225	10 kAIC
CC_X	200	225	10 kAIC

When Type CV tenant breakers are installed in these meter modules, then Eaton's breakers rated 10 kAIC or greater installed on the load side of these meter modules may be protected for short circuits up to 100 kAIC.

See load side breaker panel marking for proper short-circuit current rating.

1MM, 3MM, 200 A Meter Modules; 35MM, 37MM, 35SS and 37SS 225 A Meter Modules

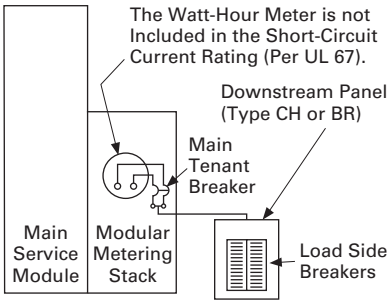

Ratings

A. The assembly shall be rated to withstand mechanical forces exerted during short-circuit conditions when connected directly to a power source having available fault current [22,000] [42,000] [65,000] [100,000] amperes symmetrical at rated voltage.

Construction

A. The entire assembly shall be front accessible and shall include [main lugs] [a main disconnect device].

B. Tenant disconnects shall be wired for cold sequence and shall be molded case circuit breakers.

C. The meter sockets shall be (ring-) (ringless-) type rated (125 A) (200 A) (as shown on the plans) and a bypass (shall be) (shall not be) required. If required, the bypass shall be a (slider-) (horn-) (lever-) (disconnect block-) type. The meter sockets and associated branch protective device positions shall be completely prewired and shipped ready for installation of the meters and tenant main breakers. Meter sockets shall include covers with sealing positions.

Bus

A. All busbars shall be [tin-plated aluminum or copper]. Main horizontal busbars shall be mounted with all three phases arranged in the same vertical plane. Bus sizing shall be based on UL standard temperature rise criteria for multiple metering equipment.

B. Provide a full capacity neutral bus where a neutral bus is indicated on the drawings.

C. All hardware used for busbar connections shall be high-tensile strength, zinc-plated. Provide Belleville-type spring washers for all bus joints.

Wiring/Terminations

A. [Mechanical-type terminals] [Crimp-type termination provisions] shall be provided for all line terminations suitable for copper or aluminum cable and rated at 75 °C.

B. Lugs shall be provided in the incoming line section for connection of the main grounding conductor.

Main Circuit Protective Devices

A. Main protective devices shall be [molded case circuit breakers] [bolted pressure switches] [quick-make/quick-break fusible switches].

Molded Case Circuit Breakers

A. [Main] [Feeder] [All] protective devices shall be molded case circuit breakers with inverse time and instantaneous tripping characteristics.

B. Circuit breakers shall be operated by a toggle-type handle and shall have a quick-make/quick-break over-center switching mechanism that is mechanically trip-free. Automatic tripping of the breaker shall be clearly indicated by the handle position. Contacts shall be nonwelding silver alloy and arc extension shall be accomplished by means of DE-ION® arc chutes.

C. Circuit breakers shall have a minimum symmetrical interrupting capacity as indicated on the drawings.

D. Circuit breakers [250-] [400-] [600-] [1200-] ampere frame and below shall be manufactured by Eaton with thermal-magnetic or electronic trip units having inverse time-current characteristics.

E. Circuit breakers shall be UL listed for series application.

Bolted Pressure Switches

A. Main protective devices shall be bolted pressure contact type and shall be UL listed.

B. Fusible switches shall be furnished with Class L fuse clips. Switch contact interrupting capacity shall be 12 times the continuous rating of the switch.

C. Fuse access door s hall be mechanically interlocked with the operating handle and shall have provisions for padlocking the switch in the OPEN position.

D. The switch shall use a stored energy deadfront operating mechanism compressed and released by the operating handle, to provide quick positive switching action, independent of the operating handle.

E. Switches shall be manually operated.

Quick-Make/Quick-Break Fusible Switches

A. Fusible switches 30 A through 1200 A frames shall be furnished with 300 V Class T-type fuse clips unless otherwise scheduled.

B. Switches shall incorporate safety cover interlocks to prevent opening the cover with the switch in the ON position.

C. Provide defeater for authorized personnel.

D. Handles shall have provisions for padlocking and shall clearly indicate the ON or OFF position.

E. Front cover doors shall be padlockable in the CLOSED position.

F. Main protective devices shall be quick-make/quick-break fusible switches as manufactured by Eaton.

Tenant Utility Metering

A. For EUSERC serviced areas, meter centers shall incorporate metering sections with tenant feeder circuits using ring-type meter sockets rated [125] [200] amperes to meet local utility and/or customer requirements.

B. The self-contained meter sockets shall include a test bypass/disconnect block per EUSERC requirements,

– OR–

A. For non-EUSERC serviced areas, meter centers shall incorporate metering sections with tenant feeder circuits using [ring-] [ringless-] type meter sockets rated [125] [200] [320] amperes to meet local utility or customer requirements. Provide meter sockets with individual covers having sealing provisions.

B. Meter sockets shall have manual bypass and optional internal barriers.

Enclosures

A. NEMA 1 Enclosure

– OR–

A. Outdoor NEMA 3R Surface-Mounted Enclosure

Finish

A. Boxes and trims shall be bonderized and finished with ANSI 61 light gray enamel.

Dimensions

Approximate Dimensions in Inches (mm)

General Layout

Minimum and maximum height of single-phase and three-phase meter sockets above typical ground level.

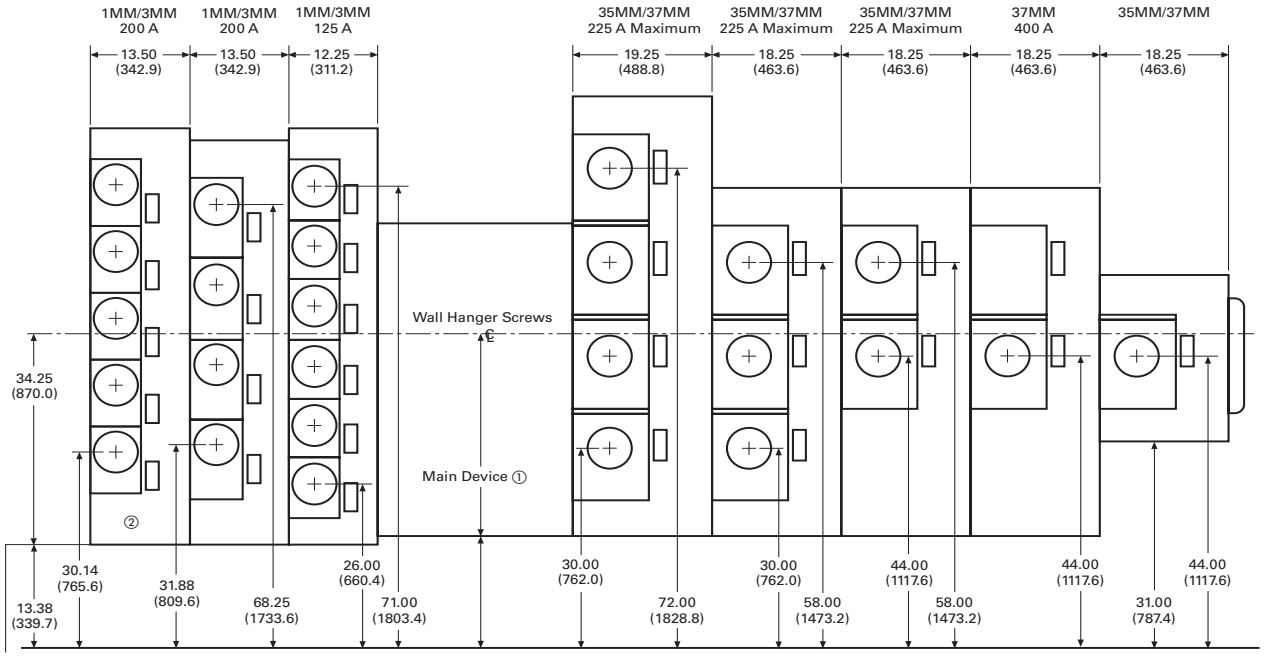

Mounting Features

Mounting Features

A standard mounting rail and factory-installed swing away feet, speed up and simplify installation.

Notes

① Not a constant value. Dimension changes depending on main device chosen. See **Page V1-T4-110** for specific dimensions.

② Residential device.

Power Pedestals

Construction Site and RV Parks

Marina Power and Lighting

Mobile Home Panels

5.1 Introduction

Product Description V1-T5-2
Application Description V1-T5-2
Optional Features V1-T5-2

5.2 Temporary Power/RV Park

Product Overview V1-T5-3
Product Description V1-T5-3
Application Description V1-T5-4
Features and Benefits V1-T5-4
Standards and Certifications V1-T5-5
Catalog Number Selection V1-T5-6
Product Selection V1-T5-7
Accessories V1-T5-7
Renewal Parts V1-T5-8
Surface Units V1-T5-10
Product Overview V1-T5-10
Product Selection V1-T5-10
Dimensions V1-T5-13
Pedestal Units V1-T5-16
Product Overview V1-T5-16
Product Selection V1-T5-16
Dimensions V1-T5-18

5.3 Mobile Home Panels

Product Overview V1-T5-21
Features V1-T5-21
Catalog Number Selection V1-T5-22
Product Selection V1-T5-22
Accessories V1-T5-23
Dimensions V1-T5-24

5.4 RV Park Hook-Ups

Power Pedestals V1-T5-28
Powerhouse Power Pedestal V1-T5-30
Powerhouse—Stainless Steel (SS) Power Pedestal V1-T5-33
Newport Camp Mate Power Pedestal V1-T5-36
Park Light Power Pedestal V1-T5-39
Firehouse V1-T5-42
Digital Electronic Kilowatthour Meters V1-T5-44
Distribution Equipment—Ground Fault Monitor V1-T5-45
Distribution Equipment—Substations V1-T5-46
Distribution Equipment—Panels V1-T5-49
Distribution Equipment—Transformers V1-T5-50

5.5 Marina Power and Lighting Equipment

Power Pedestals V1-T5-51
Lighthouse V1-T5-54
Lighthouse–SS V1-T5-58
Admiral–SS V1-T5-62
Newport Harbor Mate V1-T5-65
Hatteras Light V1-T5-69
Firehouse V1-T5-73
Smart Start V1-T5-79
Mariner V1-T5-80
Digital Electronic Kilowatthour Meters V1-T5-81
Distribution Equipment—Ground Fault Monitor V1-T5-82
Distribution Equipment—Mega Yacht Powerpoint V1-T5-83
Distribution Equipment—Substations V1-T5-86
Distribution Equipment—Panels V1-T5-89
Distribution Equipment—Transformers V1-T5-90

Don't Give Up!

If you don't find the product you want in this catalog, try the Flex Center at **1-800-330-6479**.

Power Pedestals

Contents

Description

Introduction

Product Description

A power pedestal is a device designed for outdoor service to meet temporary power requirements at construction sites, marinas, recreational vehicle (RV parks, marinas and mobile home parks). Power pedestals provide a safe and reliable means for users to access electricity at such locations.

Application Description

Construction Site and RV Parks

Power outlet panels on construction sites and in RV parks provide a safe and reliable means for users to access electricity. A wide range of products are available with multiple features and enclosure material options.

Construction Site and RV Parks

Mobile Home Panels

Eaton's versatile mobile home panels have a user-friendly design that allows for a faster, cleaner installation. Mobile home panels are designed for service entrance distribution, and include a meter and distribution section with breaker and receptacle configuration options.

Mobile Home Panels

Marina Power and Lighting

Park lighting and marina pedestals offer robust enclosure options with premium features to enhance user convenience at marinas and campgrounds.

Marina Power and Lighting

Optional Features

- Product can ship from the factory completely assembled and prewired
- External light
- TV and telephone jacks
- Ground fault monitors
- Digital electronic kilowatthour meters
- Water faucet
- Available GFI (ground fault interrupter) protection
- Weatherproof engineered resin enclosure (will never rust or deteriorate)
- Stainless steel to meet and exceed all applicable codes, and withstand harsh inland and coastal environments

Power Outlet Panels

Contents

Description	*Page*
Product Overview	V1-T5-3
Application Description	V1-T5-4
Features and Benefits	V1-T5-4
Standards and Certifications	V1-T5-5
Catalog Number Selection	V1-T5-6
Product Selection	V1-T5-7
Accessories	V1-T5-7
Renewal Parts	V1-T5-8
Surface Units	V1-T5-10
Pedestal Units	V1-T5-16

Product Overview

A power outlet panel (or POP) is a device designed for outdoor service to meet temporary power requirements at construction sites and RV parks. POPs provide a safe and reliable means for users to access electricity at such locations.

Product Description

Power outlet panels shall be designed for outdoor service to meet temporary power outlet requirements at construction sites and provide high quality, economical power to individual sites at RV parks. POPs shall be provided with means to bond the neutral for temporary service entrance applications. RV panels shall have a factory-installed insulated neutral bar.

Receptacles and Circuit Protection

Circuit protection shall be Eaton's UL listed full-size Type BR or half-size Type BD circuit breakers. The receptacles shall be NEMA commercial/industrial grade devices. Ground fault protection (GFCB) shall be provided at the 20 A duplex NEMA 5-20R receptacle or 20 A single-pole circuit breaker when required. Ground fault protection shall be provided at the circuit breaker for receptacles above 20 A when required.

Construction

The power outlet panel pedestal shall be of deadfront design and constructed of heavy gauge, 100 percent galvanized steel. Baked-on polyester powder coating shall be used for excellent mechanical strength, plus resistance to chalking caused by the sun's ultraviolet rays. The power outlet panel surface and pedestal units shall have NEMA Type 3R rainproof enclosures.

Ease of Installation

Panels shall ship from the factory completely assembled, prewired with 100 percent copper wire, and tested in accordance with UL Standard 231. The door shall swing up and open for user convenience and ease of access to breakers and receptacles. When required, a means for securing the door in the open position shall be provided. Panels shall be bottom fed through knockouts in endwall or top fed using a bolt-on raintight hub. Knockouts shall range from 1/2-inch (12.7 mm) to 1-1/2 inches (38.1 mm). Grounding provisions (#4–14 Cu/Al) shall be provided on all panels.

Application Description

POPs are also sometimes called temporary power panels, temporary site service equipment or RV panels.

Construction Site Application

When POPs are used at a construction site, they are installed on a temporary basis until permanent electrical power is available at the building. The most common reason for needing a POP at a construction site is to provide a power source for the contractor's tools.

Construction Site Application

RV Park Applications

When POPs are used at an RV park, they are installed for more permanent use and serve the purpose of providing power to the recreational vehicles. Many RV parks now supply customers with amenities such as lighted POPs with TV and telephone jacks.

RV Park Application

Service Applications

Suitable for use as temporary Service Entrance Equipment, temporary power service equipment and recreational vehicle site supply.

Features and Benefits

- Designed for outdoor service to meet power outlet requirements
- Receptacles conform to NEMA and/or ANSI configurations as specified by the National Electrical Code® (NEC)
- Includes a factory-installed insulated neutral bar with provisions for bonding when used for temporary service entrance applications
- 125 A rated meter socket
- Temporary power and RV park POPs are CSA listed. Compact POP and single receptacle devices are not CSA listed

Designed for Easy Installation and Protection

- Panels come from the factory completely assembled, prewired with 100 percent copper wire and tested...ready for easy installation
- Door swings up and open for user convenience and ease of access to breakers and receptacles
- Panels can be bottom fed through knockouts in the endwall or top fed using a bolt-on raintight hub
- Two-piece deadfront cover allows field wiring without interfering with factory wiring
- Lower deadfront cover permits easy field wiring to circuit protective devices
- Available GFI (ground fault interrupter) single- and two-pole protection through 50 A

Two Styles to Meet Your Power Outlet Needs

- **Surface mount:** User mounts unit to a post
- **Pedestal mount:** User mounts with an underground pedestal extension or pad-mounting bracket. (Underground pedestal extension and pad-mounting bracket are sold separately. See accessories **Page V1-T5-7** for part numbers and options)

Compact Design Available in Certain Configurations for Added Convenience

Standards and Certifications

- UL Standard 231
- UL File Number E163588

Receptacles conform to NEMA and/or ANSI configurations as specified by the NEC.

Standard Compliance

All power outlet panels for temporary construction site power and RV (recreational vehicle) application shall be UL listed for the U.S. per UL Standard 231, File E163588. Receptacles shall conform to NEMA and/or ANSI configurations as specified by the National Electrical Code (NEC).

Listed

Surface Units

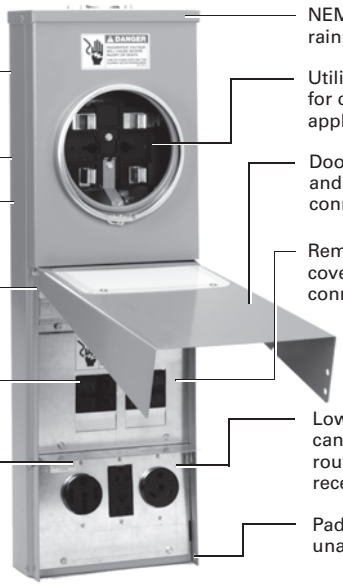

- 100 percent galvanized steel with baked-on polyester powder coating
- Three-point mounting
- One-piece case back for metered and unmetered panels
- Lighted option for site location and nighttime panel operations
- GFI circuit breakers available through 50 A
- Unique steel barrier prevents unauthorized operation of breakers when door is closed and padlocked
- NEMA 3R construction for rainproof installation
- Utility grade metering available for construction site or RV park applications
- Door swings up when opening and allows cords to remain connected when closed.
- Removable upper deadfront cover for easy incoming wire connections to breaker terminals
- Lower deadfront cover can be removed for easy routing of incoming wires or receptacle changeouts
- Padlock provisions to prevent unauthorized entry

- **Metered units available with meter on top or on bottom**
- **Units are factory wired and assembled**

Pedestal Units

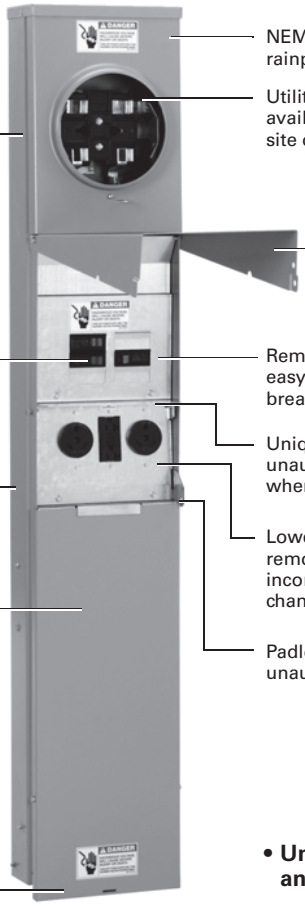

- 100 percent galvanized steel with baked-on polyester powder coating
- GFI circuit breakers (single- and two-pole) available through 50 A
- One-piece case back for metered and unmetered panels
- Loop-feed lug assembly with 350 kcmil lugs included as standard
- Pedestal extension available for underground services
- Pad-mounted bracket option also available
- NEMA 3R construction for rainproof installation
- Utility grade metering available for construction site or RV park applications
- Door swings up when opening and allows cords to remain connected when closed
- Removable upper deadfront cover for easy incoming wire connections to breaker terminals
- Unique steel barrier prevents unauthorized operation of breakers when door is closed and padlocked
- Lower deadfront cover can be removed for easy routing of incoming wires or receptacle changeouts
- Padlock provisions to prevent unauthorized entry

- **Units are factory wired and assembled**

Catalog Number Selection

C H M 1 N 7 N 4 N P X L T Z U

Eaton's Cutler-Hammer® Series

Metering Type
- **U** = Unmetered
- **M** = Metered-ring
- **R** = Metered-ringless

Receptacle Type Left Position ①

1 = NEMA 14-50R	**A** = NEMA L14-50R
2 = NEMA 5-20R2 ②	**B** = NEMA L6-50R
3 = NEMA 14-30R	**C** = NEMA L5-50R
4 = NEMA TT-30R	**D** = NEMA L14-30R
5 = NEMA 6-20R2	**E** = NEMA L6-30R
6 = NEMA 5-20R2	**F** = NEMA L5-30R
7 = NEMA 5-20R2GFI	**H** = NEMA L6-20R
8 = NEMA 5-20R2GFI ②	**J** = NEMA L5-20R
9 = NEMA 5-20R2GFI ③	**Blank** = No receptacle
K = NEMA 6-20R2 ②	

Receptacle Type Center Position ①
- See "**Receptacle Type Left Position**" for code selection

Receptacle Type Right Position ①
- See "**Receptacle Type Left Position**" for code selection

Circuit Breaker Type Position 2
- **N** = Non-ground fault
- **G** = Ground fault

Circuit Breaker Type Position 3
- **N** = Non-ground fault
- **G** = Ground fault

Circuit Breaker Type Position 1
- **N** = Non-ground fault
- **G** = Ground fault

Mounting
- **S** = Surface
- **P** = Pedestal
- **B** = Back-to-back pedestal

Interior
- **X** = Six circuit
- **Blank** = Standard Four circuit

Lighting
- **L** = Lighted

Pedestal Extension
- **TZ**= Factory installed pedestal extension with lay-in ground lug

Meter Location (for Metered Devices Only)
- **U** = Bottom location
- **Blank** = Top location

Notes

① For receptacle configurations, see **table below**.

② Weather-resistant.

③ Weather-resistant/tamper resistant.

Receptacle Configuration

1		50 A, 125/250 V, three-pole, four-wire, **NEMA 14-50R** Two-pole, 50 A breaker	**4**		30 A, 125 V, two-pole, three-wire, **NEMA TT-30R** Single-pole, 30 A breaker	**7**		20 A, 125 V, two-pole, three-wire, **NEMA 5-20R2GFI** Single-pole, 20 A breaker
2		20 A, 125 V, two-pole, three-wire, weather-resistant (WR), **NEMA 5-20R2** Single-pole, 20 A breaker	**5**		20 A, 250 V, two-pole, three-wire, **NEMA 6-20R2** Two-pole, 20 A breaker	**8**		20 A, 125 V, two-pole, three-wire, weather-resistant (WR), **NEMA 5-20R2GFI**
3		30 A, 125/250 V, three-pole, four-wire, **NEMA 14-30R** Two-pole, 30 A breaker	**6**		20 A, 125 V, two-pole, three-wire, **NEMA 5-20R2** Single-pole, 20 A breaker	**9**		20 A, 125 V, two-pole, three-wire, weather-resistant/ tamper-resistant (WR TR), **NEMA 5-20R2GFI**
						K		20 A, 250 V, two-pole, three-wire, weather-resistant (WR), **NEMA 6-20R2** Two-pole, 20 A breaker

Twist-Lock and Custom Receptacle/Breaker Combinations

A		50 A, 125/250 V, three-pole, three-wire, **NEMA L14-50R** Two-pole, 50 A breaker	**D**		30 A, 125/250 V, three-pole, four-wire, **NEMA L14-30R** Two-pole, 30 A breaker	**H**		20 A, 250 V, two-pole, three-wire, **NEMA L6-20R** Two-pole, 20 A breaker
B		50 A, 250 V, two-pole, three-wire, **NEMA L6-50R** Two-pole, 50 A breaker	**E**		30 A, 250 V, two-pole, three-wire, **NEMA L6-30R** Two-pole, 30 A breaker	**J**		20 A, 125 V, two-pole, three-wire, **NEMA L5-20R** Single-pole, 20 A breaker
C		50 A, 125 V, two-pole, three-wire, **NEMA L5-50R** Single-pole, 50 A breaker	**F**		30 A, 125 V, two-pole, three-wire, **NEMA L5-30R** Single-pole, 30 A breaker			

Product Selection

When quoting or selecting a power outlet panel, the following questions should be answered:

- Unmetered, ring or ringless style
- Number and types of receptacles (seven standard and eight twist-lock options)
- Standard or ground fault breakers
- Surface, pedestal or back-to-back mounting
- Are any factory or field options required?

Power Outlet Panel Receptacle Configuration Rules

Four Receptacles/Unit
All receptacles must be NEMA 5-20R2 or NEMA 5-20R2GFI, surface mount only.

Three Receptacles/Unit

- One or more of the receptacles must be NEMA 6-20R2, NEMA 5-20R2 or NEMA 5-20R2GFI
- NEMA 6-20R2, NEMA 5-20R2, or NEMA 5-20R2GFI must go in the second position
- If two receptacles consist of types NEMA 14-50R, NEMA 10-50R, NEMA 14-30R or NEMA 6-20R2 a six-circuit interior must be added
  - Example: **CHUIN5N2NSX**

Note: Configuration 1 and 2 were chosen so a six-circuit interior needs to be added (suffix X) to the end of the catalog number. Also, configuration 5 is in the second position.

Two, One and Zero Receptacles/Unit
Any configuration.

Accessories

Accessories

	Description	Catalog Number
Underground Pedestal Extension	Underground pedestal extension	**CHPEDEXT**
	Stainless steel underground pedestal extension	**CHPEDEXTSS**
Pad-Mount Bracket	Pad-mount bracket	**CHPADEXT**
Cable TV/Telephone Bracket	Cable TV and telephone bracket	**CHTELTV**
DS Hub	Rainproof conduit hub 0.75 inch (19.1 mm)	**DS075H1**
	Rainproof conduit hub 1.00 inch (25.4 mm)	**DS100H1**
	Rainproof conduit hub 1.25 inch (31.8 mm)	**DS125H1**
	Rainproof conduit hub 1.50 inch (38.1 mm)	**DS150H1**

Fluorescent Light Kit

Fluorescent Light Kit

Description	Catalog Number
Converts power outlet panel to lighted unit, **must also order CHOUTCVRL**	**CHFLGTKIT**

Renewal Parts

Renewal Parts

	Description	Catalog Number
Circuit Breaker (BR/GFCB)	See this volume, Tab 1, section 1.2	—
Meter Socket	Ring style replacement meter socket	**CHPOPMSRING**
	Ringless style replacement meter socket	**CHPOPMSRL**
	5th jaw kit	**ARP00035CHJ**
	Horn bypass (one lug cap per kit; four kits required per device)	**ARP00777CH**
Bonding Strap and Mounting Hardware	Bonding strap and mounting hardware	**CHBONDST**
Inner Lens	Inner lens for lighted power outlet panels	**CHINLENS**
Loop Feed Lug Assembly	Loop feed lug assembly for single pedestal	**CHLOOPFDP**
	Loop feed lug assembly for back-to-back pedestal	**CHLOOPFDB**
Lower Deadfront Cover	Blank lower deadfront cover	**CHLDFCVR**
	Lower deadfront cover with duplex receptacle opening	**CHLDFCVR1**
	Lower deadfront cover with duplex, duplex receptacle opening	**CHLDFCVR2**
	Lower deadfront cover with duplex, duplex, duplex receptacle opening	**CHLDFCVR3**
	Lower deadfront cover with rectangle receptacle opening	**CHLDFCVR4**
	Lower deadfront cover with rectangle, rectangle receptacle opening	**CHLDFCVR5**
	Lower deadfront cover with rectangle, rectangle, rectangle receptacle opening	**CHLDFCVR6**
	Lower deadfront cover with duplex, rectangle receptacle opening	**CHLDFCVR7**
	Lower deadfront cover with duplex, rectangle, duplex receptacle opening	**CHLDFCVR8**
	Lower deadfront cover with rectangle, rectangle, duplex receptacle opening	**CHLDFCVR9**
	Lower deadfront cover with round receptacle opening	**CHLDFCVR10**
	Lower deadfront cover with round, round receptacle opening	**CHLDFCVR11**
	Lower deadfront cover with round, duplex receptacle opening	**CHLDFCVR12**

Renewal Parts, continued

	Description	Catalog Number
	Lower deadfront cover with round, duplex, duplex receptacle opening	**CHLDFCVR13**
	Lower deadfront cover with round, duplex, round receptacle opening	**CHLDFCVR14**
	Lower deadfront cover with round, rectangle receptacle opening	**CHLDFCVR15**
	Lower deadfront cover with round, rectangle, rectangle receptacle opening	**CHLDFCVR16**
	Lower deadfront cover with round, rectangle, round receptacle opening	**CHLDFCVR17**
	Lower deadfront cover with round, rectangle, duplex receptacle opening	**CHLDFCVR18**
Upper Deadfront Cover	Upper deadfront cover with six breaker twistouts	**CHUDFCVR**
	Upper deadfront cover with provisions for lighted option	**CHUDFCVRL**
Outer Door	Outer door	**CHOUTCVR**
Outer Door with Lens	Outer door with lens	**CHOUTCVRL**
Neutral Assemblies	Six-hole neutral assembly with 2/0 lug	**CHNEUT**
	Seven-hole neutral assembly with 2/0 lug	**CHNEUT1**
	Five-hole ground bar kit	**GBK5**
	10-hole ground bar kit	**GBK10**
	Replacement Meter Cover	
	Replacement meter cover—ring type	**CHPOPRMC**
	Replacement meter cover—ringless	**CHPOPRLMC**
	Replacement meter cover—ringless	**CHPOPRLMCN**
	Replacement meter cover—ringless	**CHPOPRLMCN2**

Power Outlet Panels

Contents

Description	*Page*
Product Overview	**V1-T5-3**
Surface Units	
Dimensions	**V1-T5-13**
Pedestal Units	**V1-T5-16**

Surface Units

Product Overview

A power outlet panel (or POP) is a device designed for outdoor service to meet temporary power requirements at construction sites and recreation vehicle (RV) parks. POPs provide a safe and reliable means for users to access electricity at such locations.

Product Selection

Power Outlet Panel Receptacle Configuration Rules

See **Page V1-T5-7** for complete list.

Four Receptacles/Unit

All receptacles must be NEMA 5-20R2 and/or NEMA 5-20R2GFI, surface mount only.

Three Receptacles/Unit

- One or more of the receptacles must be NEMA 6-20R2, NEMA 5-20R2 or NEMA 5-20R2GFI
- NEMA 6-20R2, NEMA 5-20R2, or NEMA 5-20R2GFI must go in the second position
- If two receptacles consist of types NEMA 14-50R, NEMA 10-50R, NEMA 14-30R or NEMA 6-20R2 a six-circuit interior must be added
  - Example: **CHUIN5N2NSX**

Note: Configuration 1 and 2 were chosen so a six-circuit interior needs to be added (suffix X) to the end of the catalog number. Also, configuration 5 is in the second position.

Two, One and Zero Receptacles/Unit

Any configuration.

Options

- Six-circuit interior
- Factory-mounted pedestal extension
- Lighted
- Bottom fed

Surface Type

Single Receptacle CHU4S

Unmetered Type CHU1N7N4NS

Unmetered (Compact Version)

Ampere Series	Receptacle Description Position Left	Center	Right	Breaker Description 1st	2nd	3rd	Catalog Number
Unmetered Single Receptacle							
50	—	14-50R	—	No breaker	No breaker	No breaker	**CHU1S**
30	—	14-30 R	—	No breaker	No breaker	No breaker	**CHU3S**
30	—	TT-30R	—	No breaker	No breaker	No breaker	**CHU4S**
20	—	6-20R2	—	No breaker	No breaker	No breaker	**CHU5S**
20	—	5-20R2	—	No breaker	No breaker	No breaker	**CHU6S**
20	—	5-20R2GFI	—	No breaker	No breaker	No breaker	**CHU7S**
Unmetered							
20/20/20	5-20R2	5-20R2	6-20R2	GFI	GFI	GFI	**CHU6G6G5GS**
20/20/20	5-20R2WR	5-20R2WR	6-20R2WR	GFI	GFI	GFI	**CHU2G2GKGS**
20/20/20	5-20R2GFI	5-20R2GFI	6-20R2	Non-GFI	Non-GFI	Non-GFI	**CHU7N7N5NS**
20/20/20	5-20R2GFIWR	5-20R2GFIWR	6-20R2WR	Non-GFI	Non-GFI	Non-GFI	**CHU8N8NKNS**
20/20/20	5-20R2GFI	5-20R2GFI	6-20R2	Non-GFI	Non-GFI	GFI	**CHU7N7N5GS**
20/20/20	5-20R2GFIWR	5-20R2GFIWR	6-20R2WR	Non-GFI	Non-GFI	GFI	**CHU8N8NKGS**
50/20/30	14-50R	5-20R2GFI	TT-30R	Non-GFI	Non-GFI	Non-GFI	**CHU1N7N4NS**
50/20/30	14-50R	5-20R2GFI	6-20R	GFI	Non-GFI	Non-GFI	**CHU1G7N7NS**
50/20	14-50R	5-20RGFI	—	GFI	Non-GFI	—	**CHU1G7NS**
50/20	14-50R	5-20RGFI	—	Non-GFI	Non-GFI	—	**CHU1N7NS**
50/20/50	14-50R	5-20R2GFI	14-50R	Non-GFI	Non-GFI	Non-GFI	**CHU1N7N1NSX** ①
30/30/20	TT-30R	5-20R2GFI	TT-30R	Non-GFI	Non-GFI	Non-GFI	**CHU4N7N4NS**
20/20/20	5-20R2	5-20R2	6-20R2	GFI	GFI	GFI	**CHU6G6G5GS60M** ②
Unmetered (Compact Version)							
50	14-50R	—	—	Non-GFI	—	—	**CHU1NS**
20	5-20R2	—	—	Non-GFI	—	—	**CHU2NS**
30	TT-30R	—	—	GFI	—	—	**CHU4GS**
30/30	TT-30R	TT-30R	—	Non-GFI	Non-GFI	—	**CHU4N4NS**
30/20	TT-30R	5-20R2	—	Non-GFI	Non-GFI	—	**CHU4N6NS**
30/20	TT-30R	5-20R2GFI	—	Non-GFI	Non-GFI	—	**CHU4N7NS**
30	TT-30R	—	—	Non-GFI	—	—	**CHU4NS**
20	6-20R2	—	—	GFI	—	—	**CHU5GS**
20/20	5-20R2	5-20R2	—	GFI	GFI	—	**CHU6G6GS**
20	5-20R2	—	—	GFI	—	—	**CHU6GS**
20/20	5-20R2	5-20R2	—	Non-GFI	Non-GFI	—	**CHU6N6NS**
20	5-20R2	—	—	Non-GFI	—	—	**CHU6NS**
20/20	5-20R2GFI	5-20R2GFI	—	Non-GFI	Non-GFI	—	**CHU7N7NS**
20	5-20R2GFI	—	—	Non-GFI	—	—	**CHU7NS**

Notes

① The "X" suffix indicates that a six circuit interior is provided, instead of the standard four circuit interior.

② Includes 60 A two-pole main breaker for service disconnect ratings.

Contact your local Eaton sales office for configurations not listed.

Surface Type, continued

Metered Ring CHM1G7NS

Metered Ringless Type CHR4N7NS

Metered Ring or Ringless Type Bottom Feed

Ampere Series	Receptacle Description Position Left	Center	Right	Breaker Description 1st	2nd	3rd	Catalog Number
Metered—Ring							
50/20/20	14-50R	5-20R2GFI	5-20R2GFI	GFI	Non-GFI	Non-GFI	**CHM1G7N7NS**
20/20	5-20R2GFI	5-20R2GFI	—	Non-GFI	Non-GFI	—	**CHM7N7NS**
20/20/20	5-20R2GFI	5-20R2GFI	6-20R2	Non-GFI	Non-GFI	GFI	**CHM7N7N5GS**
20/20/20	5-20R2GFI	5-20R2GFI	6-20R2	Non-GFI	Non-GFI	Non-GFI	**CHM7N7N5NS**
50/30/20	14-50R	5-20R2GFI	TT-30R	Non-GFI	Non-GFI	Non-GFI	**CHM1N7N4NS**
50/20	14-50R	5-20R2GFI	—	Non-GFI	Non-GFI	—	**CHM1N7NS**
20/20	6-20R2	5-20R2GFI	—	Non-GFI	Non-GFI	Non-GFI	**CHM5N7NS**
Metered—Ringless							
50/20	14-50R	5-20R2GFI	—	GFI	Non-GFI	—	**CHR1G7NS**
20/20	5-20R2GFI	5-20R2GFI	—	Non-GFI	Non-GFI	—	**CHR7N7NS**
50/20/20	14-50R	5-20R2GFI	5-20R2GFI	GFI	Non-GFI	Non-GFI	**CHR1G7N7NS**
50/20	14-50R	5-20R2GFI	—	Non-GFI	Non-GFI	—	**CHR1N7NS**
20/20/20	5-20R2GFI	5-20R2GFI	5-20R2GFI	Non-GFI	Non-GFI	Non-GFI	**CHR7N7N7NS**
20/20/20	5-20R2WR	5-20R2WR	6-20R2WR	GFI	GFI	GFI	**CHR2G2GKGS**
30/20/20	14-30R	5-20R2GFI	5-20R2GFI	Non-GFI	Non-GFI	Non-GFI	**CHR3N7N7NS**
50/30/20	14-50R	5-20R2GFI	TT-30R	Non-GFI	Non-GFI	Non-GFI	**CHR1N7N4NS**
Metered—Ring—Bottom Fed							
20/20	5-20R2GFI	5-20R2GFI	—	Non-GFI	Non-GFI	—	**CHM7N7NSU**
20/20/20	5-20R2GFI	5-20R2GFI	6-20R2	Non-GFI	Non-GFI	GFI	**CHM7N7N5GSU**
50/20/20	14-50R	5-20R2GFI	5-20R2GFI	GFI	Non-GFI	Non-GFI	**CHM1G7N7NSU**
Metered—Ringless—Bottom Fed							
20/20	5-20R2GFI	5-20R2GFI	—	Non-GFI	Non-GFI	—	**CHR7N7NSU**
50/20	14-50R	5-20R2GFI	—	GFI	Non-GFI	—	**CHR1G7NSU**
50/20	10-50R	5-20R2GFI	—	GFI	Non-GFI	—	**CHR2G7NSU**
20/20/20	5-20R2WR	5-20R2WR	6-20R2WR	GFI	GFI	GFI	**CHR2G2GKGSU**
20/20/20	5-20R2GFI	5-20R2GFI	6-20R2	Non-GFI	Non-GFI	GFI	**CHR7N7N5GSU**
20/20/20	5-20R2GFI	5-20R2GFI	6-20R2	Non-GFI	Non-GFI	Non-GFI	**CHR7N7N5NSU**
20/20/20	5-20R2GFI	5-20R2GFI	5-20R2GFI	Non-GFI	Non-GFI	Non-GFI	**CHR7N7N7NSU**
30/20/20	14-30R	5-20R2GFI	5-20R2GFI	Non-GFI	Non-GFI	Non-GFI	**CHR3N7N7NSU**
30/20/20	14-30R	5-20R2GFI	5-20R2GFI	GFI	Non-GFI	Non-GFI	**CHR3G7N7NSU**
50/20/20	14-50R	5-20R2GFI	5-20R2GFI	GFI	Non-GFI	Non-GFI	**CHR1G7N7NSU**
50/20/30	14-50R	5-20R2GFI	TT-30R	Non-GFI	Non-GFI	Non-GFI	**CHR1N7N4NSU**

Accessories

See **Page V1-T5-7**.

Dimensions

Approximate Dimensions in Inches (mm)

Single Receptacle

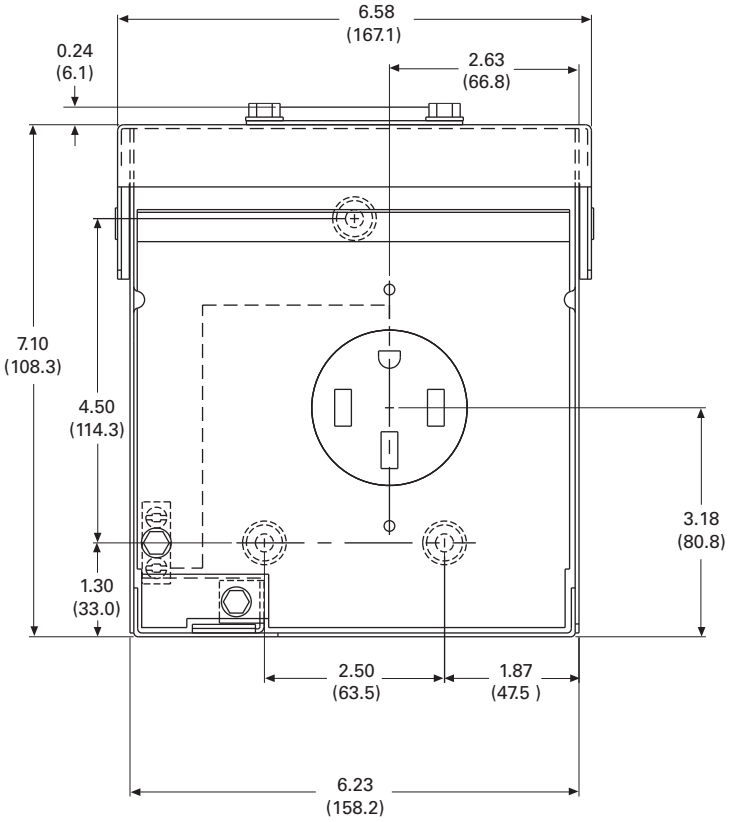

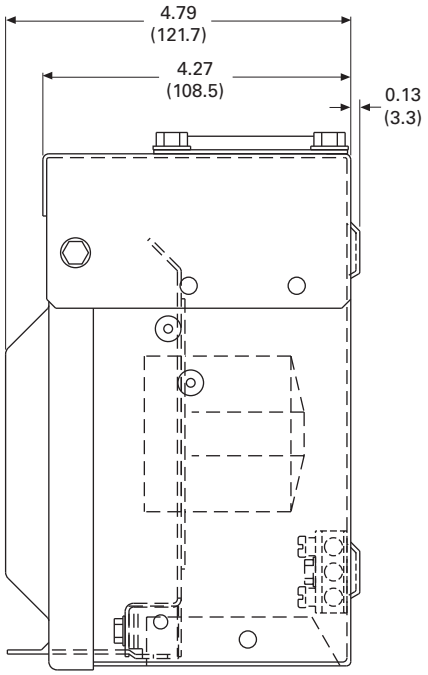

Approximate Dimensions in Inches (mm)

Compact Design Option

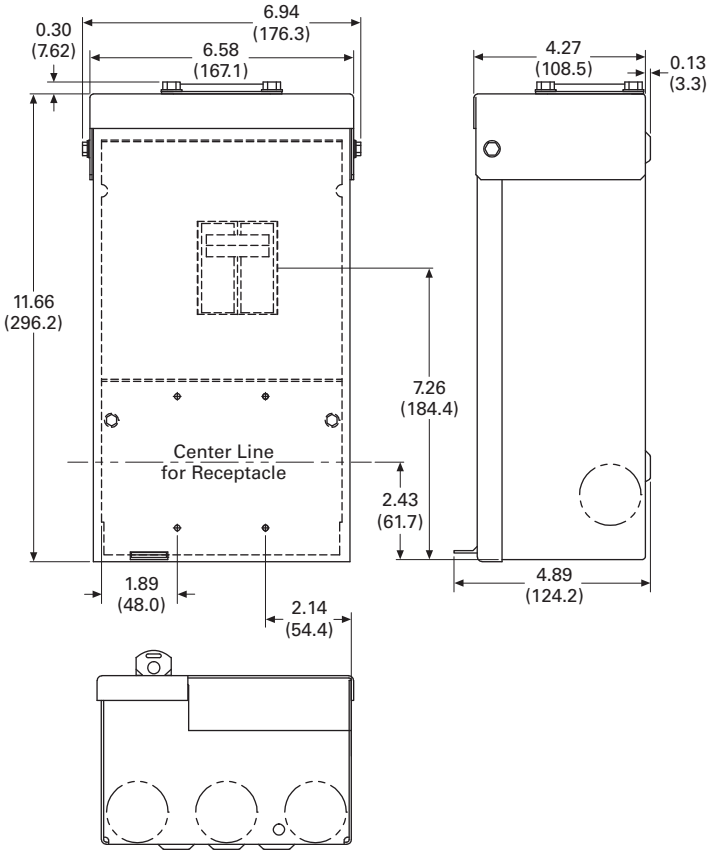

Unmetered Units

Unmetered Surface Type

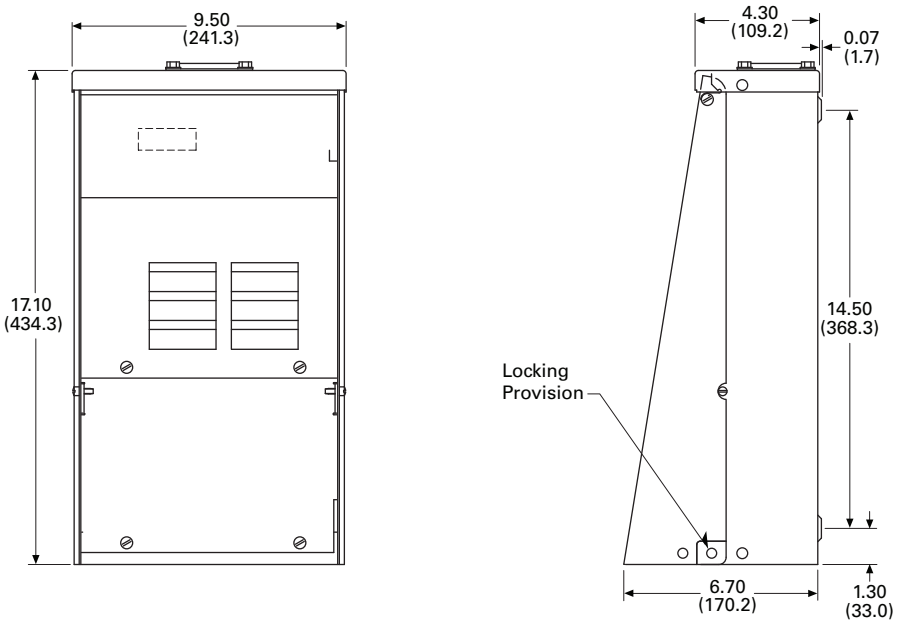

Approximate Dimensions in Inches (mm)

Metered Units (Ring and Ringless)

Metered Surface Type

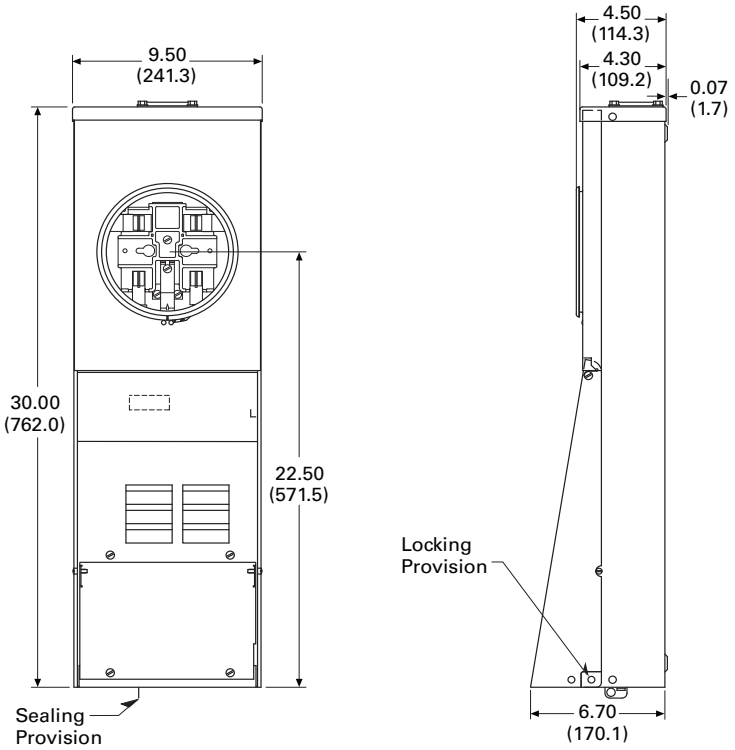

Bottom Fed Type

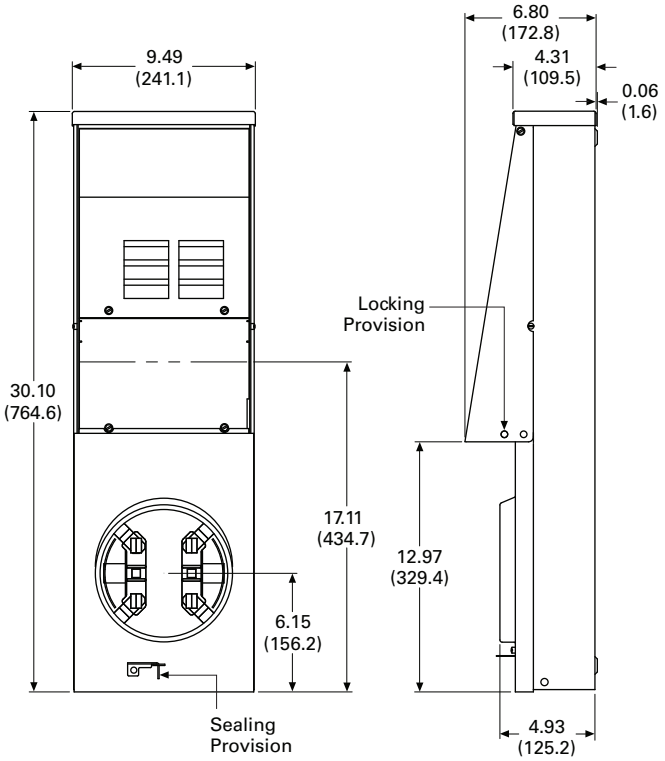

Power Outlet Panels

Contents

Description	*Page*
Product Overview	**V1-T5-3**
Surface Units	**V1-T5-10**
Pedestal Units	**V1-T5-16**
Dimensions	**V1-T5-18**

Pedestal Units

Product Overview

A power outlet panel (or POP) is a device designed for outdoor service to meet temporary power requirements at construction sites and recreation vehicle (RV) parks. POPs provide a safe and reliable means for users to access electricity at such locations.

Product Selection

Power Outlet Panel Receptacle Configuration Rules

See **Page V1-T5-7** for complete list.

Four Receptacles/Unit

All receptacles must be NEMA 5-20R2 and/or NEMA 5-20R2GFI, surface mount only.

Three Receptacles/Unit

- One or more of the receptacles must be NEMA 6-20R2, NEMA 5-20R2 or NEMA 5-20R2GFI
- NEMA 6-20R2, NEMA 5-20R2, or NEMA 5-20R2GFI must go in the second position
- If two receptacles consist of types NEMA 14-50R, NEMA 10-50R, NEMA 14-30R or NEMA 6-20R2 a six-circuit interior must be added
  - Example: **CHUIN5N2NSX**

Note: Configuration 1 and 2 were chosen so a six-circuit interior needs to be added (suffix X) to the end of the catalog number. Also, configuration 5 is in the second position.

Two, One and Zero Receptacles/Unit

Any configuration.

Options

- Six-circuit interior
- Factory-mounted pedestal extension
- Lighted
- Bottom fed

Unmetered Type

CHM1N7N4NPTZ

Pedestal Type

Ampere Series	Receptacle Description Position Left	Center	Right	Breaker Description 1st	2nd	3rd	Catalog Number
Unmetered							
50/30/20	14-50R	5-20R2GFI	TT-30R	Non-GFI	Non-GFI	Non-GFI	**CHU1N7N4NP**
30/20	TT-30R	5-20R2GFI	—	Non-GFI	Non-GFI	—	**CHU4N7NP**
50/30/20	14-50R	5-20R2GFI	TT-30R	Non-GFI	Non-GFI	Non-GFI	**CHU1N7N4NPTZ**
30/30/20	TT-30R	5-20R2GFI	TT-30R	Non-GFI	Non-GFI	Non-GFI	**CHU4N7N4NP**
30/20	TT-30R	5-20R2GFI	—	Non-GFI	Non-GFI	—	**CHU4N7NPTZ**
Metered—Ring							
50/30/20	14-50R	5-20R2GFI	TT-30R	Non-GFI	Non-GFI	Non-GFI	**CHM1N7N4NP**
50/20	14-50R	5-20R2GFI	—	Non-GFI	Non-GFI	—	**CHM1N7NP**
50/30/20	14-50R	5-20R2GFI	TT-30R	Non-GFI	Non-GFI	Non-GFI	**CHM1N7N4NPTZ**
30/20	TT-30R	5-20R2GFI	—	Non-GFI	Non-GFI	—	**CHM4N7NPTZ**
Metered—Ringless							
50/30/20	14-50R	5-20R2GFI	TT-30R	Non-GFI	Non-GFI	Non-GFI	**CHR1N7N4NP**
50/20/50	14-50R	5-20R2GFI	14-50R	Non-GFI	Non-GFI	Non-GFI	**CHR1N7N1NPX**
50/20/30	14-50R	5-20R2GFI	14-30R	Non-GFI	Non-GFI	Non-GFI	**CHR1N7N3NPX**
50/20/30	14-50R	5-20R2	14-30R	Non-GFI	Ground fault	Non-GFI	**CHR1N6G3NPX**

CHU1N7N4NBTZ

Back-to-Back Pedestal Type

Ampere Series	Receptacle Description Position Left	Center	Right	Breaker Description 1st	2nd	3rd	Catalog Number
Unmetered ①							
30/30/20	TT-30R	5-20R2GFI	TT-30R	Non-GFI	Non-GFI	Non-GFI	**CHU4N7N4NB**
50/30/20	14-50R	5-20R2GFI	TT-30R	Non-GFI	Non-GFI	Non-GFI	**CHU1N7N4NBTZ**
Metered—Ring ①							
30/20	TT-30R	5-20R2GFI	—	Non-GFI	Non-GFI	—	**CHM4N7NB**
50/30/20	14-50R	5-20R2GFI	TT-30R	Non-GFI	Non-GFI	Non-GFI	**CHM1N7N4NB**
Metered—Ringless ①							
50/30/20	14-50R	5-20R2GFI	TT-30R	Non-GFI	Non-GFI	Non-GFI	**CHR1N7N4NBTZ**

Notes

① The pedestal back-to-back units have receptacles and circuit breakers as shown for each panel and share one common pedestal with loop feed lugs. Contact your local Eaton sales office for configurations not listed.

Accessories

See **Page V1-T5-7**.

Dimensions

Approximate Dimensions in Inches (mm)

Metered Units

100 A Pedestal

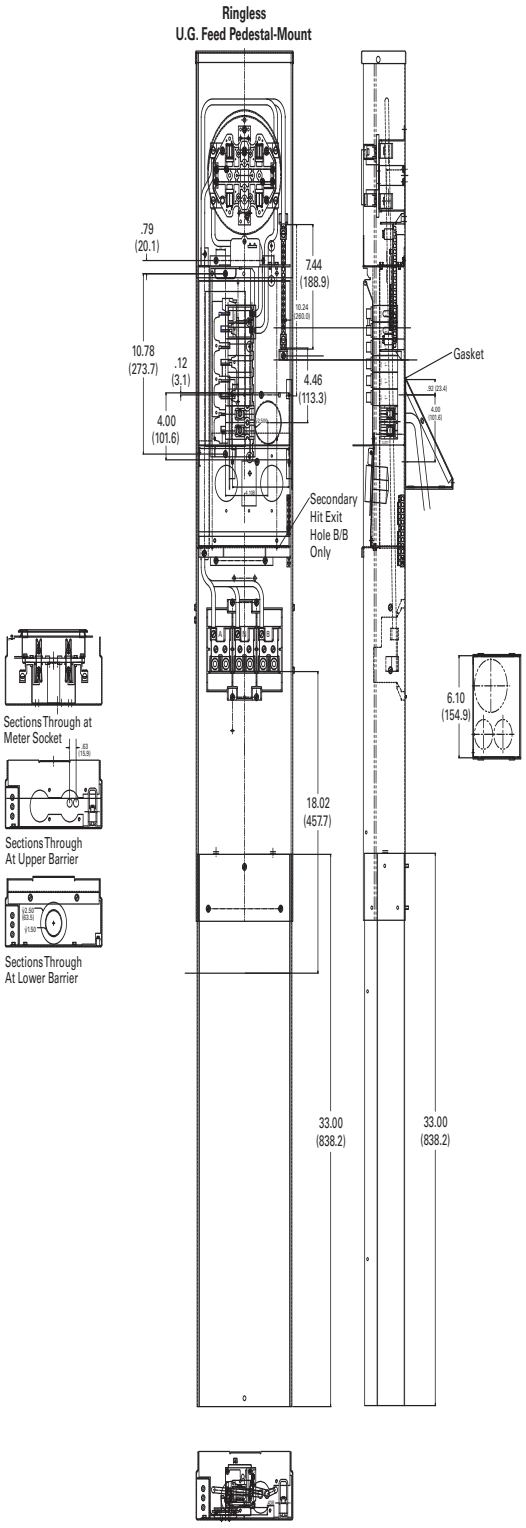

Approximate Dimensions in Inches (mm)

Metered Units (Ring and Ringless)

Metered Back-to-Back Pedestal Type

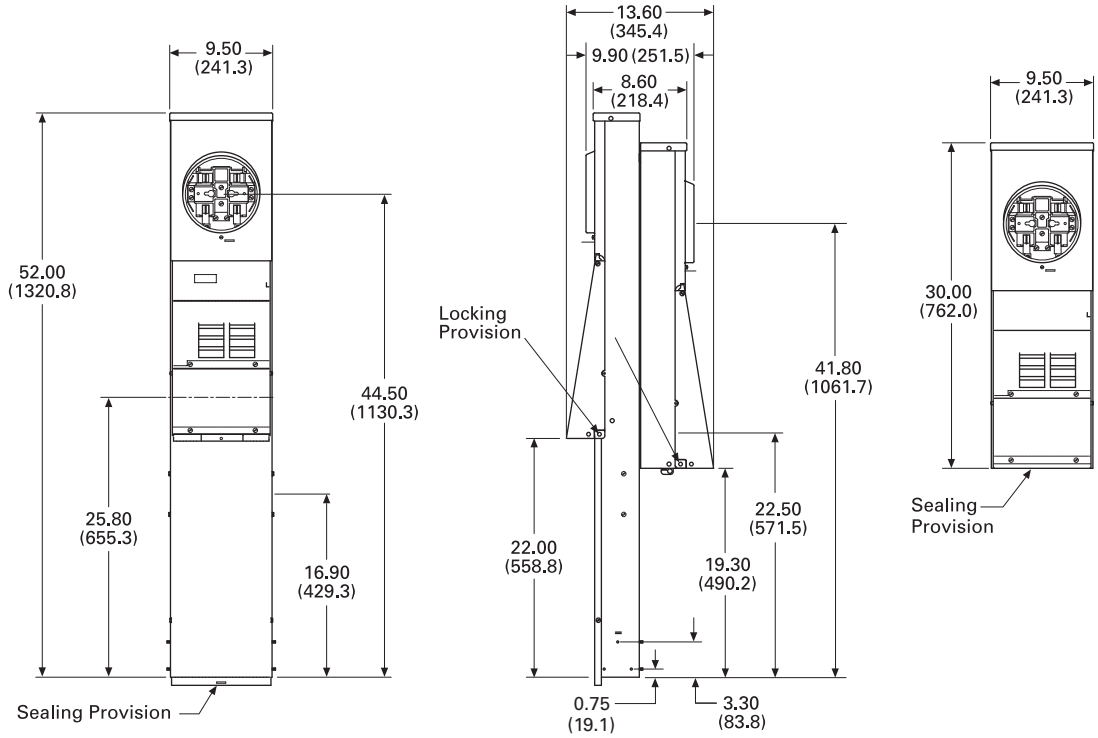

Bottom Fed Type

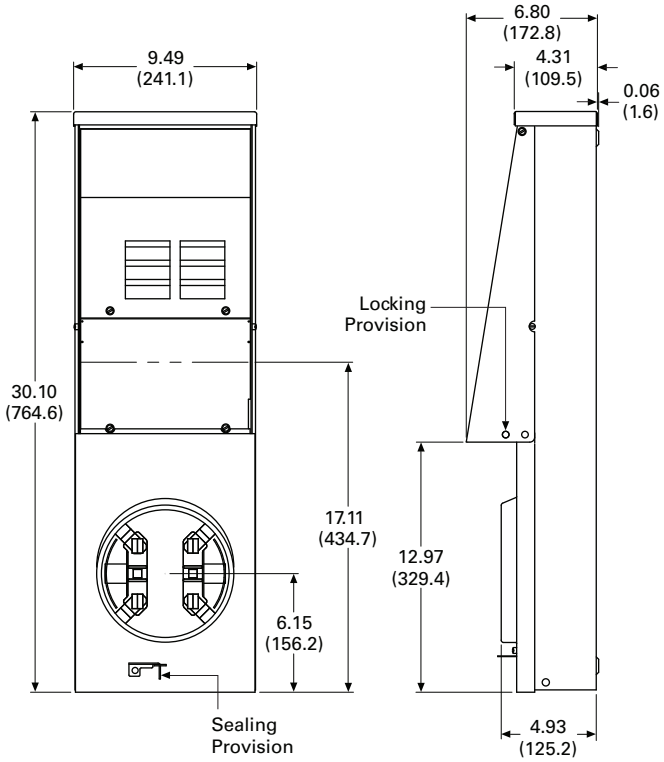

Approximate Dimensions in Inches (mm)

Unmetered Back-to-Back Pedestal Type

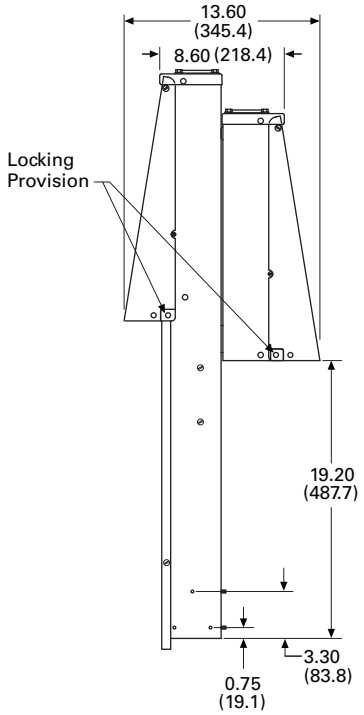

Unmetered Pedestal Type

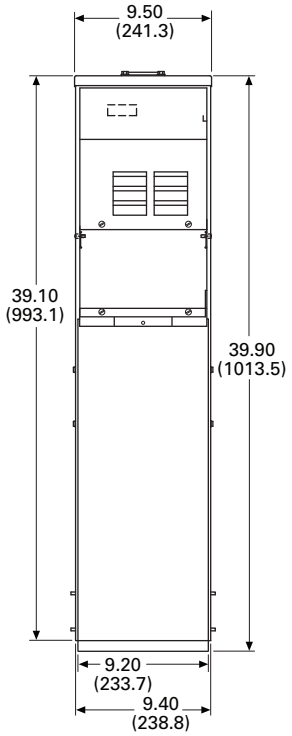

Metered Pedestal Type

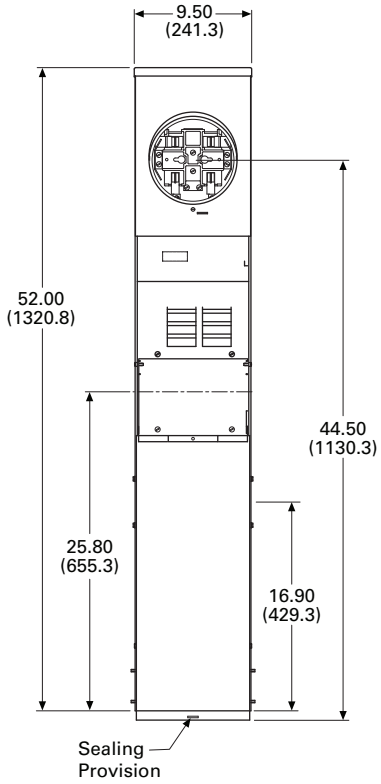

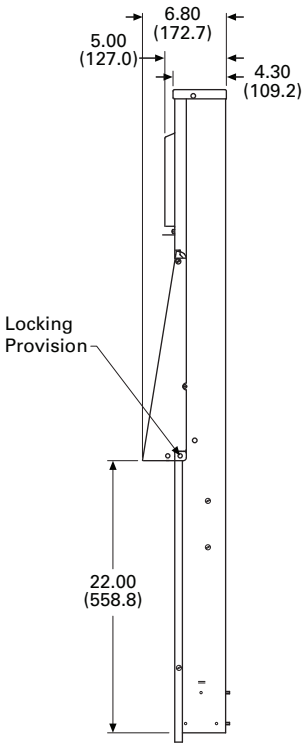

Power Outlet Panels

Contents

Description	*Page*
Mobile Home Panels	
Catalog Number Selection	**V1-T5-22**
Product Selection	**V1-T5-22**
Accessories	**V1-T5-23**
Dimensions	**V1-T5-24**

Product Overview

Eaton's versatile Mobile Home Panels have a user-friendly design that allows for a faster, cleaner installation.

100 and 200 A panels come complete with the main breaker and a 4/8 or 8/16 interior, respectively. The 200 A units are designed with ample width to ensure plenty of room for wire bending and an easier installation.

Receptacle Deadfront Kits

Optional receptacle deadfront kits enable the field installation of contractor supplied receptacles and breakers that can supply power for a variety of applications including:

- Visiting RVs
- Temporary power
- Lawn equipment
- Air compressors
- Anything else that requires cord-connected power

Features

Fastenerless Socket Design

- Eliminates overheating caused by loose socket connections

Pedestal Unit

- Convenient and sturdy ground mounting
- Loop feed feature allows several units to be connected in series

Easier, Better and Faster Installation

- More wire bending and viewing room
- Additional circuits mean more flexibility

Catalog Number Selection

Mobile Home Panels

MH M 100 P 1 N 4 N

Type
MH = Mobile Home Panel

Metering Type
M = Metered-ring
R = Metered-ringless

Amperes
100
150
200

Mounting
P = Pedestal
B = Back-to-back

Optional Receptacle Type Position 1
1 = NEMA 14-50R
3 = NEMA 14-30R
4 = NEMA TT-30R
5 = NEMA 6-20R2
6 = NEMA 5-20R2
7 = NEMA 5-20R2GFI
8 = NEMA 5-20R2GFI (WR)
9 = NEMA 5-20R2GFI (WR/TR)
Blank = No receptacle

Circuit Breaker Type Position 1
N = Non-ground fault
G = Ground fault

Optional Receptacle Type Position 2
1 = NEMA 14-50R
3 = NEMA 14-30R
4 = NEMA TT-30R
5 = NEMA 6-20R2
6 = NEMA 5-20R2
7 = NEMA 5-20R2GFI
8 = NEMA 5-20R2GFI (WR)
9 = NEMA 5-20R2GFI (WR/TR)
Blank = No receptacle

Circuit Breaker Type Position 2
N = Non-ground fault
G = Ground fault

Product Selection

Mobile Home Panel

Mobile Home Panels ①

Amperes	Security	Interior	Main	Branch Breakers	Mounting	Receptacles	Catalog Number
100	Ring	4/8	**BR2100**	BR	Pedestal	None	**MHM100P**
100	Ring	4/8	**BR2100**	BR	Back-to-back	None	**MHM100B**
100	Ringless	4/8	**BR2100**	BR	Pedestal	None	**MHR100P**
100	Ringless	4/8	**BR2100**	BR	Back-to-back	None	**MHR100B**
150	Ring	8/16	**CSR2150**	BR	Pedestal	None	**MHM150P**
150	Ring	8/16	**CSR2150**	BR	Back-to-back	None	**MHM150B**
150	Ringless	8/16	**CSR2150**	BR	Pedestal	None	**MHR150P**
150	Ringless	8/16	**CSR2150**	BR	Back-to-back	None	**MHR150B**
200	Ring	8/16	**CSR2200**	BR	Pedestal	None	**MHM200P**
200	Ring	8/16	**CSR2200**	BR	Back-to-back	None	**MHM200B**
200	Ringless	8/16	**CSR2200**	BR	Pedestal	None	**MHR200P**
200	Ringless	8/16	**CSR2200**	BR	Back-to-back	None	**MHR200B**
200	Ringless	8/16	**CSR2200**	BR	Pedestal	Qty 1 14-50R Qty 2 TT-30R	**MHM200P1N4N4N**

Note
① Pedestal Extension included with Mobile Home Panels.

Mobile Home Panel Deadfronts for 200 A Units ①

Available Receptacle Deadfront Kits—Receptacles and Breakers Not Included

MHDX

MHDXX

MHDBLANK

MHDZ

MHDZZ

MHDZZZ

MHDZZZZ

MHDY

MHDYY

MHDYYY

MHDYYYY

MHDXZX

MHDZZY

MHDYZ

MHDYZY

MHDXYX

MHDXYY

MHDXY

MHDXZY

MHDXZ

MHDXZZ

Accessories

Mobile Home Panels

Hubs not used on mobile home panels.

Description	Amperes	Catalog Number
Direct feed kit	—	**MHDFK**
Pedestal extension	200	**MHPEDEXT**
Stainless steel pedestal extension	200	**MHPEDEXTSS**
Padmount adapter	200	**MHPADEXT**
Pedestal extension	100	**CHPEDEXT100**
Stainless steel pedestal extension	100	**CHPEDESTSS100**
Padmount adapter	100	**CHPADEXT100**

Note

① For 100 A units, the accessory Catalog Number would be MHD1____. For example, to order a deadfront to accept one 30 A receptacle (round) in a 100 ampere device, the Catalog Number would be MHD1X.

Dimensions

Approximate Dimensions in Inches (mm)

Mobile Home Panel—Ringless—Pedestal Mounting

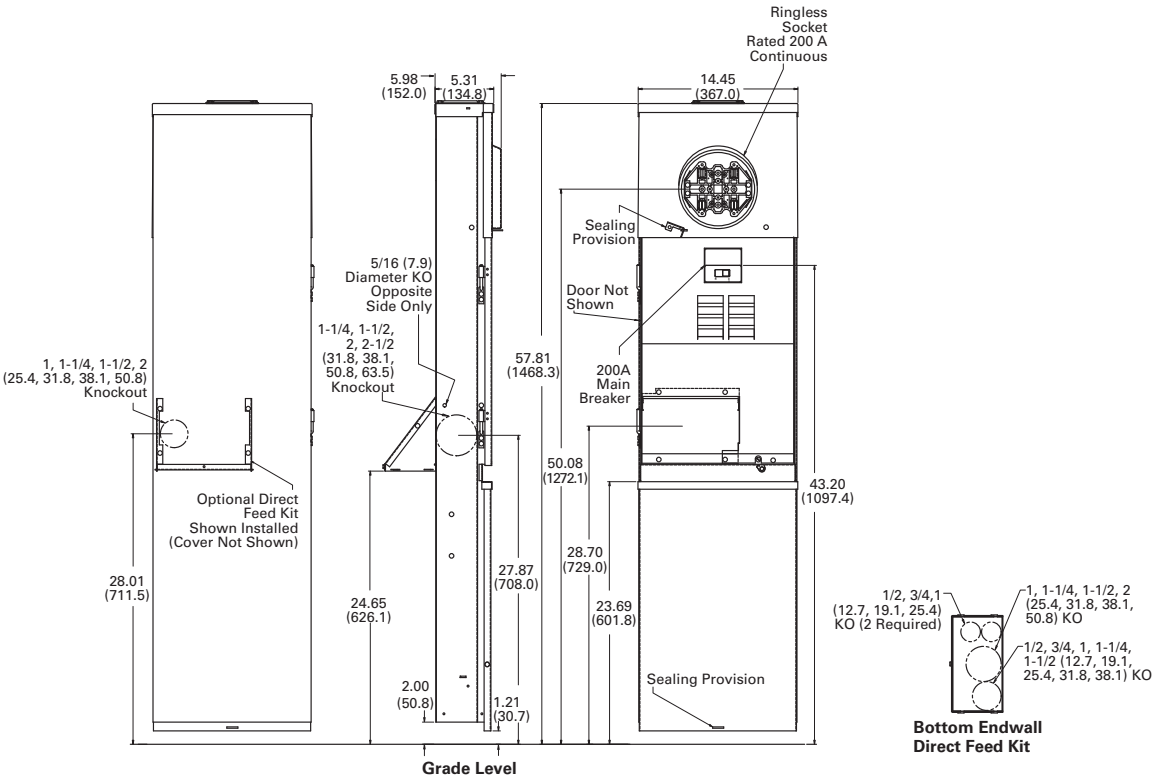

Approximate Dimensions in Inches (mm)

Mobile Home Panel—Ringless—Back-to-Back Mounting

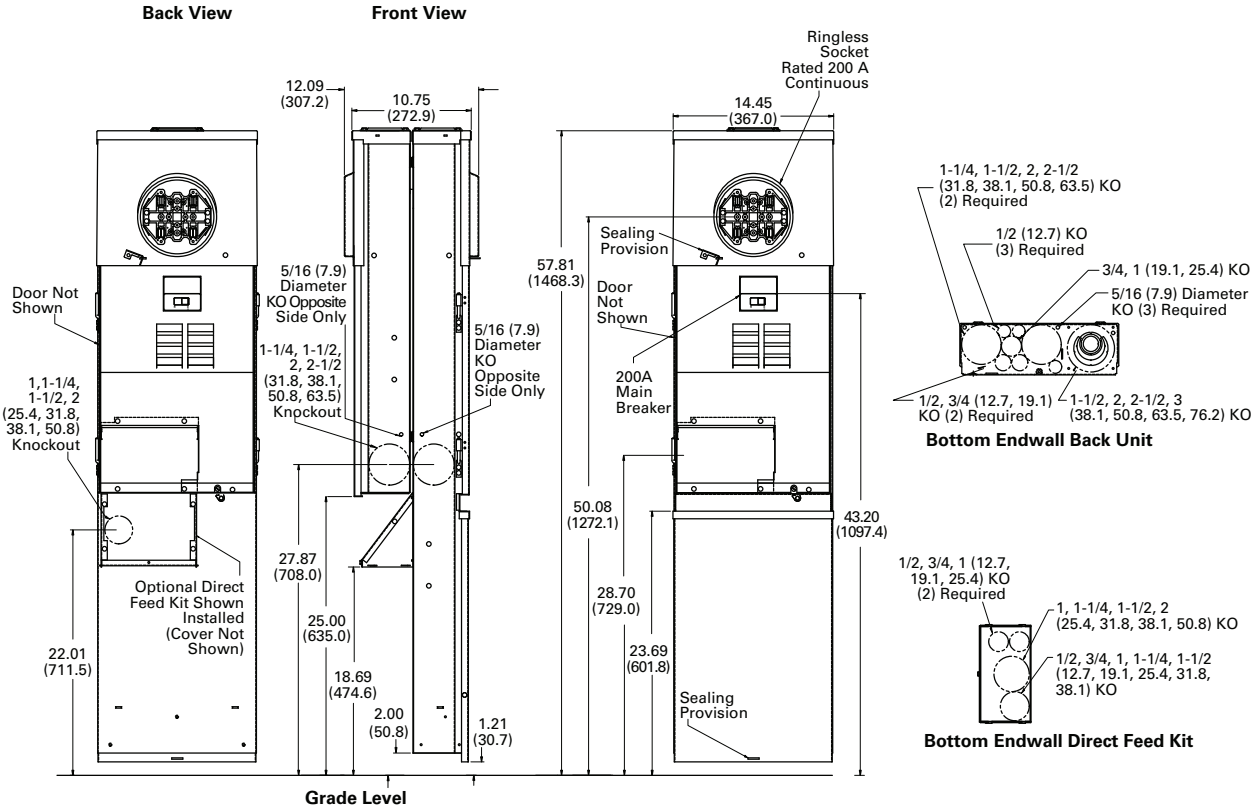

Approximate Dimensions in Inches (mm)

Mobile Home Panel—Ring—Pedestal Mounting

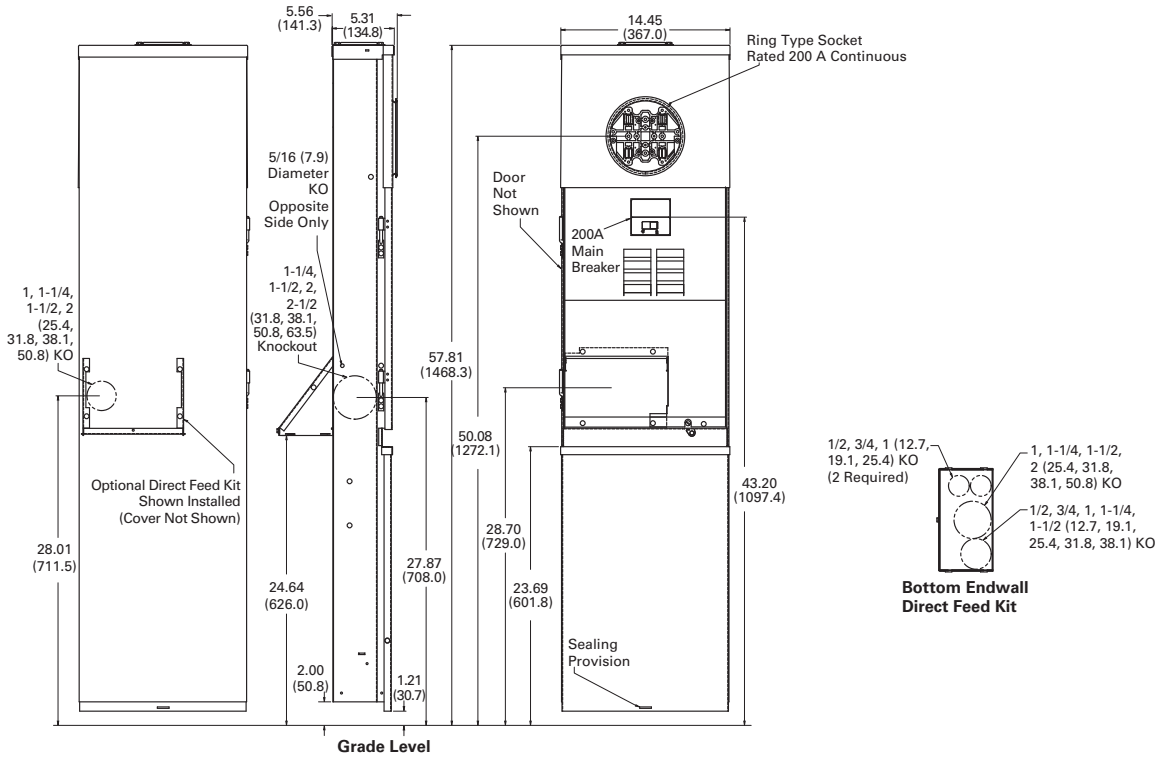

Approximate Dimensions in Inches (mm)

Mobile Home Panel—Ring—Back-to-Back Mounting

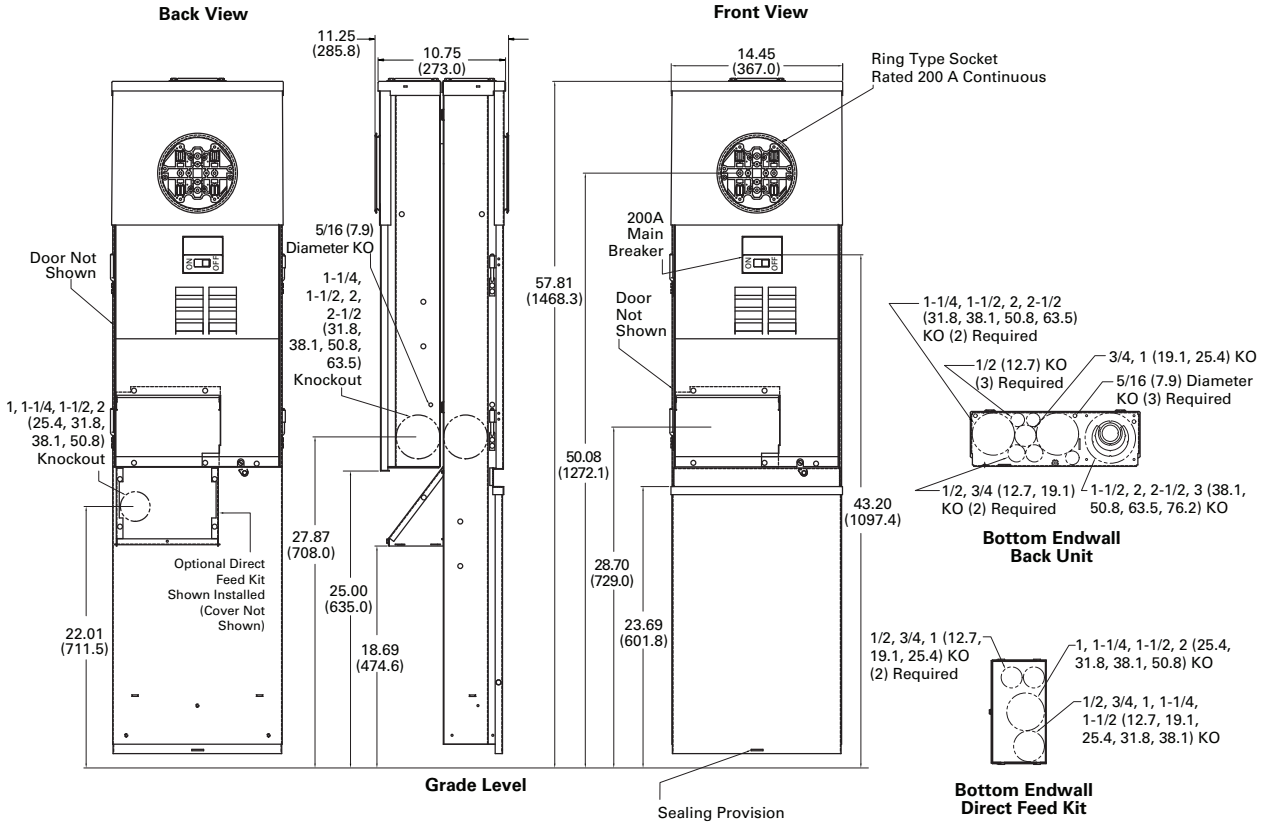

Recreational Vehicle/Campground Products

High-Quality, Weatherproof Electrical Equipment

Contents

Description

Power Pedestals
Product Selection Guide **V1-T5-29**
Powerhouse Power Pedestal **V1-T5-30**
Powerhouse—Stainless Steel (SS) Power Pedestal **V1-T5-33**
Newport Camp Mate Power Pedestal **V1-T5-36**
Park Light Power Pedestal **V1-T5-39**
Firehouse **V1-T5-42**
Digital Electronic Kilowatthour Meters **V1-T5-44**
Distribution Equipment—Ground Fault Monitor . . **V1-T5-45**
Distribution Equipment—Substations. **V1-T5-46**
Distribution Equipment—Panels. **V1-T5-49**
Distribution Equipment—Transformers. **V1-T5-50**

Power Pedestals

Product Overview

On March 24, 2006, RV Park Hook-Ups® joined together with Eaton to provide unmatched products and services in the recreational vehicle industry, as well as the marina industry. Known as the leader in electrical control, power distribution, and industrial automation products and services, Eaton is a quality driven company that constantly looks for ways to provide enhanced products and service solutions for their customers. Eaton will be able to provide RV park developers a complete electrical solution. For more information on the other products available from Eaton, visit us online at www.eaton.com or www.rvparkhookups.com

What Eaton has to Offer

- Complementary comprehensive in-house electrical designs for your complete RV or marina development
- RV and marina power pedestals
- Custom substations
- Transformers
- Panels
- Wire
- Digital electronic meters
- Receptacles and breakers
- Specialized electrical parts and equipment

Product Selection Guide

Power Receptacles

Power Outlets			Maximum GFI			
Side One	**Side Two**	**Phase**	**Powerhouse**	**Powerhouse–SS**	**Newport Camp Mate**	**Park Light**
None	None	1	2	2	2	2
30–20	00	1	2	2	1	1
30–20	30–20	1	2	2	—	—
30–30–20	30–30–20	1	2	2	—	—
30–20	50–20	1	2	2	—	—
30–30–20	50–20	1	2	2	—	—
30–30–20	30–50–20	1	2	2	—	—
30–30–20	50–50–20	1	2	2	—	—
30–50–20	30–50–20	1	2	2	—	—
30–50–20	50–50–20	1	2	2	—	—
50–20	None	1	2	2	—	—
50–20	50–20	1	2	2	—	—
50–50–20	50–20	1	2	2	—	—
50–50–20	50–50–20	1	2	2	—	—
30–50–20	None	1	2	2	0	—

Powerhouse Power Pedestal

Contents

Description	*Page*
Power Pedestals	**V1-T5-28**
Powerhouse Power Pedestal	
Standards and Certifications	**V1-T5-31**
Catalog Number Selection	**V1-T5-31**
Accessories	**V1-T5-32**
Dimensions	**V1-T5-32**
Powerhouse—Stainless Steel (SS) Power Pedestal	**V1-T5-33**
Newport Camp Mate Power Pedestal	**V1-T5-36**
Park Light Power Pedestal	**V1-T5-39**
Firehouse	**V1-T5-42**
Digital Electronic Kilowatthour Meters	**V1-T5-44**
Distribution Equipment—Ground Fault Monitor	**V1-T5-45**
Distribution Equipment—Substations	**V1-T5-46**
Distribution Equipment—Panels	**V1-T5-49**
Distribution Equipment—Transformers	**V1-T5-50**

Powerhouse Power Pedestal

Product Description

The Powerhouse® RV utility center is our most popular pedestal for single or double RV sites because of its full complement of standard features and available option packages able to meet any user requirement. The housing is made of durable weatherproof engineered resin and will never rust or deteriorate.

That's why it comes with a limited lifetime warranty. Since the Powerhouse can accommodate two RV sites, it's an economical pedestal for double site installation. This unit is ideal for new, or when retrofitting, full-service RV parks.

Features

- Photocell controlled 13 watt fluorescent light with amber lens
- Lockable weatherproof doors that protect receptacles and breakers
- Hose and cable brackets
- Engineered resin housing with a two-part polyurethane coating for a UV-resistant, long-lasting finish
- Limited lifetime warranty on the housing
- Loop-feed mechanical busbars that can accept up to 250 kcmil wire
- Hinged pedestal base providing easy access for installation and maintenance

Surge Protection

SurgeTrap is designed to protect electrical and electronic loads from transients and surge disturbances on your AC power line, such as voltage surges, spikes and lighting. The SurgeTrap has a lifetime warranty where Eaton will replace the SurgeTrap device at no charge.

- 175 kA maximum surge current
- 3500 joules
- Type 3R enclosure
- Comes with a protection working indicator light
- Factory installed integral to pedestal or available for retrofit

Available Options

- Clear lens
- Photocell controlled single or dual 7 watt or 13 watt fluorescent light
- Telephone (RJ-11) for each side
- Cable TV for each side
- High-speed Internet connector (RJ-45) for each side
- Water—single or dual 1/4-turn brass ball valves (brass "T" connection) with 3/4-inch hose bibs
- Water meters with remote capability
- Water—anti-siphon faucet
- Loop-feed 3/8-inch stud lug copper busbar for up to 250 kcmil wire (recommended for salt water environments)
- Single-feed mechanical busbars for up to 250 kcmil wire
- Digital electronic meter for each side
- Wireless remote reading of electronic kilowatt meters
- Meter socket for each side powered (to accept glass style meter)
- Direct burial ground mounting stand stainless or galvanized
- Custom paint color

Standards and Certifications

- UL/CSA listed

Listed

Catalog Number Selection

P D U 4 7 0 0 0 0 0 0 1 2 K M

Type

P	= Powerhouse
Z	= PHSS

Lighting and Lens Color

A	= 7 W light	Amber
B	= Dual 7 W light	Amber
C	= 9 W light	Amber
D	= 13 W light	Amber
E	= Dual 13 W light	Amber
F	= No lighting	Amber
G	= 7 W light	Clear
H	= Dual 7 W light	Clear
I	= 9 W light	Clear
J	= 13 W light	Clear
K	= Dual 13 W light	Clear
L	= No lighting	Clear
M	= 7 W light	Special
N	= Dual 7 W light	Special
O	= 9 W light	Special
P	= 13 W light	Special
Q	= Dual 13 W light	Special
R	= No lighting	Special
S	= 350 MA LED	Amber
T	= 700 MA LED	Amber
U	= 350 MA LED	Clear
V	= 700 MA LED	Clear
W	= 350 MA LED	Special
Y	= 700 MA LED	Special

Metering Type

U	= Unmetered
D	= Digital electronic meters (side one)
T	= Digital electronic meters (side two)
B	= Digital electronic meters (both sides)
R	= Receptacles metered individually
M	= One meter socket (100 A)
N	= Two meter socket (100 A each)

Sides and Receptacles

R1S1	R2S1	R3S1	R4S1	R1S2	R2S2	R3S2	R4S2
0	0	0	0	0	0	0	0
1	1	1	1	1	1	1	1
2	2	2	2	2	2	2	2
3	3	3	3	3	3	3	3
4	4	4	4	4	4	4	4
5	5	5	5	5	5	5	5
6	6	6	6	6	6	6	6
7	7	7	7	7	7	7	7
8	8	8	8	8	8	8	8

0	= None
1	= 20 A GFI duplex
2	= 30 A, 125 V
4	= 50 A, 125/250 V
5	= 100 A, 208 V
6	= 100 A, 250 V
7	= 100 A, 277/480 V
8	= 100 A, 480 V

Water Option ①

0	= 0
1	= 1
2	= 2
3	= Single water meter
4	= Dual water meter
5	= Single meter, 2 V
6	= 1 frost free
7	= 2 frost free

Extra Unmetered GFI Receptacles

0	= None
1	= 1
2	= 2

Phone Cable TV and Internet Options

	Phone Jack	Cable TV Jack	Internet Option
A =	1	0	0
B =	1	0	1
C =	1	0	2
D =	1	1	0
E =	1	1	1
F =	1	1	2
G =	1	2	0
H =	1	2	1
I =	1	2	2
J =	2	0	0
K =	2	0	1
L =	2	0	2
M =	2	1	0
N =	2	1	1
O =	2	1	2
P =	2	2	0
Q =	2	2	1
R =	2	2	2
S =	0	2	2
T =	0	0	1
U =	0	0	2
V =	0	1	0
W =	0	1	1
X =	0	1	2
Y =	0	2	0
Z =	0	2	1
0 =	0	0	0

Bus

S	= Single-phase 3/8-inch copper busbar
F	= Three-phase 3/8-inch copper busbar
C	= Single-phase 3/8-inch Canadian busbar
T	= Three-phase 3/8-inch Canadian busbar
M	= Single-phase 300 kcmil mechanical lug bus
Z	= Three-phase 300 kcmil mechanical lug bus
L	= Single-phase 350 kcmil mechanical lug bus
P	= Three-phase 350 kcmil mechanical lug bus
N	= Single-phase 1/4-inch copper busbar
Q	= Single-phase 1/4-inch split mechanical busbar
A	= Single-phase 300 kcmil mechanical lug Canadian bus
B	= Three-phase 300 kcmil mechanical lug Canadian bus
D	= Single-phase 350 kcmil mechanical lug Canadian bus
E	= Three-phase 350 kcmil mechanical lug Canadian bus

Receptacle: R1S1 = Receptacle 1, Side 1
R2S1 = Receptacle 2, Side 1
R3S1 = Receptacle 3, Side 1
R1S2 = Receptacle 1, Side 2
R2S2 = Receptacle 2, Side 2
R3S2 = Receptacle 3, Side 2

Notes

① Number represents the quantity of 1/4-turn ball valves with 3/4-inch hose bibs.

Internet option also available. Contact factory for details.

Accessories

See **Page V1-T5-75**.

Dimensions

Approximate Dimensions in Inches (mm)

Powerhouse

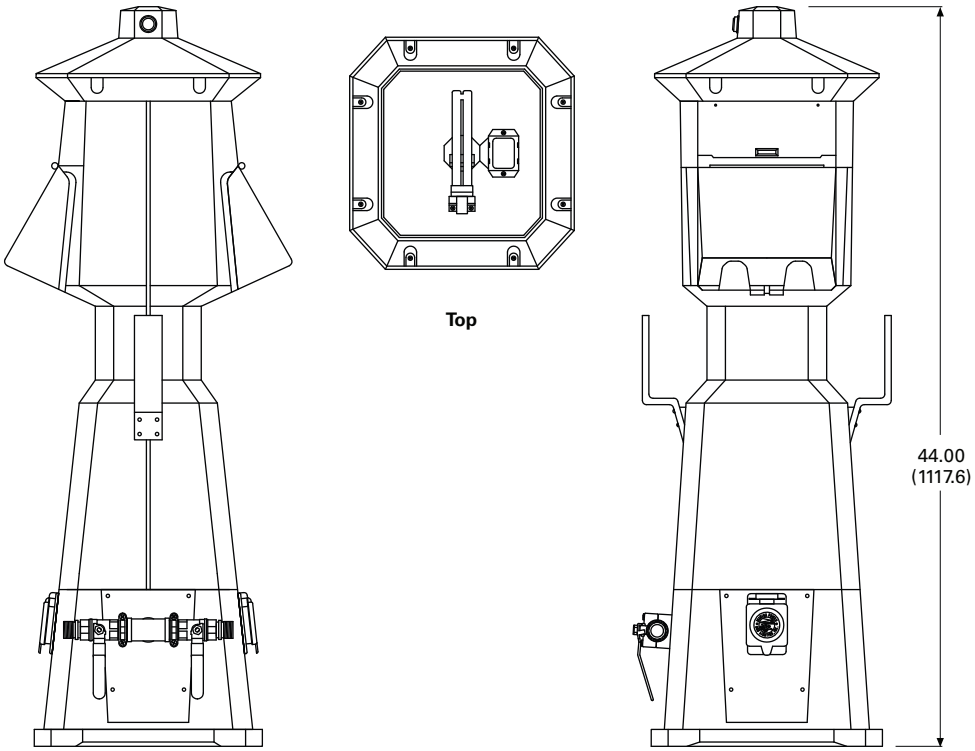

Side View **Front View**

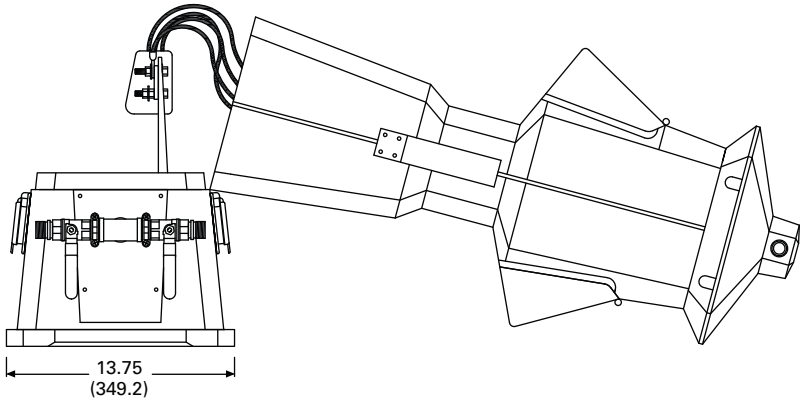

Broken View

Powerhouse—Stainless Steel (SS) Power Pedestal

Contents

Description	*Page*
Power Pedestals	**V1-T5-28**
Powerhouse Power Pedestal	**V1-T5-30**
Powerhouse—Stainless Steel (SS) Power Pedestal	
Catalog Number Selection	**V1-T5-34**
Accessories	**V1-T5-35**
Dimensions	**V1-T5-35**
Newport Camp Mate Power Pedestal	**V1-T5-36**
Park Light Power Pedestal	**V1-T5-39**
Firehouse	**V1-T5-42**
Digital Electronic Kilowatthour Meters	**V1-T5-44**
Distribution Equipment—Ground Fault Monitor	**V1-T5-45**
Distribution Equipment—Substations	**V1-T5-46**
Distribution Equipment—Panels	**V1-T5-49**
Distribution Equipment—Transformers	**V1-T5-50**

Powerhouse—Stainless Steel (SS) Power Pedestal

Product Description

For long-lasting durability and low maintenance, the new stainless steel Powerhouse–SS pedestal is the most resilient power center offered.

We have designed a stainless steel pedestal that will meet and exceed all applicable codes and withstand harsh inland and coastal environments.

Features

- Stainless steel housing with a limited lifetime warranty
- Photocell controlled 13 watt fluorescent light with amber lens
- Large removable access panel for easy installation and maintenance
- Weatherproof doors that protect receptacles and breakers
- Backlit faceplate to aid in hooking up at night
- Hose and cable brackets
- Powder-coated finish
- Loop-feed mechanical busbars that can accept up to 350 kcmil wire

Available Options

- Clear lens
- Photocell controlled single or dual 7 watt or 13 watt fluorescent light
- Telephone (RJ-11) for each side
- Cable TV for each side
- High-speed Internet connection (RJ-45) for each side
- Water–single or dual 1/4-turn brass ball valves (brass "T" connection) with 3/4-inch hose bibs
- Water meters with remote capability
- Water—anti-siphon faucet
- Direct burial stainless steel ground mounting stand
- Lockable doors
- Loop-feed 3/8-inch stud lug copper busbar for up to 350 kcmil wire (recommended for salt water environments)
- Single-feed mechanical busbars for up to 350 kcmil wire
- Digital electronic metering for each side
- Wireless remote reading of electronic kilowatt meters
- Meter socket for each side powered (to accept glass style meter)
- Four door design to add more outlets per pedestal

Catalog Number Selection

Z D U 4 7 0 0 0 0 0 0 1 2 K M

Type

P	= Powerhouse
Z	= PHSS

Lighting and Lens Color

A	= 7 W light	Amber
B	= Dual 7 W light	Amber
C	= 9 W light	Amber
D	= 13 W light	Amber
E	= Dual 13 W light	Amber
F	= No lighting	Amber
G	= 7 W light	Clear
H	= Dual 7 W light	Clear
I	= 9 W light	Clear
J	= 13 W light	Clear
K	= Dual 13 W light	Clear
L	= No lighting	Clear
M	= 7 W light	Special
N	= Dual 7 W light	Special
O	= 9 W light	Special
P	= 13 W light	Special
Q	= Dual 13 W light	Special
R	= No lighting	Special
S	= 350 MA LED	Amber
T	= 700 MA LED	Amber
U	= 350 MA LED	Clear
V	= 700 MA LED	Clear
W	= 350 MA LED	Special
Y	= 700 MA LED	Special

Metering Type

U	= Unmetered
D	= Digital electronic meters (side one)
T	= Digital electronic meters (side two)
B	= Digital electronic meters (both sides)
R	= Receptacles metered individually
M	= One meter socket (100 A)
N	= Two meter socket (100 A each)

Sides and Receptacles

R1S1	R2S1	R3S1	R4S1	R1S2	R2S2	R3S2	R4S2
0	0	0	0	0	0	0	0
1	1	1	1	1	1	1	1
2	2	2	2	2	2	2	2
3	3	3	3	3	3	3	3
4	4	4	4	4	4	4	4
5	5	5	5	5	5	5	5
6	6	6	6	6	6	6	6
7	7	7	7	7	7	7	7
8	8	8	8	8	8	8	8

0	= None
1	= 20 A GFI duplex
2	= 30 A, 125 V
4	= 50 A, 125/250 V
5	= 100 A, 208 V
6	= 100 A, 250 V
7	= 100 A, 277/480 V
8	= 100 A, 480 V

Water Option ①

0	= 0
1	= 1
2	= 2
3	= Single water meter
4	= Dual water meter
5	= Single meter, 2 V
6	= 1 frost free
7	= 2 frost free

Extra Unmetered GFI Receptacles

0	= None
1	= 1
2	= 2

Phone Cable TV and Internet Options

	Phone Jack	Cable TV Jack	Internet Option
A =	1	0	0
B =	1	0	1
C =	1	0	2
D =	1	1	0
E =	1	1	1
F =	1	1	2
G =	1	2	0
H =	1	2	1
I =	1	2	2
J =	2	0	0
K =	2	0	1
L =	2	0	2
M =	2	1	0
N =	2	1	1
O =	2	1	2
P =	2	2	0
Q =	2	2	1
R =	2	2	2
S =	0	2	2
T =	0	0	1
U =	0	0	2
V =	0	1	0
W =	0	1	1
X =	0	1	2
Y =	0	2	0
Z =	0	2	1
0 =	0	0	0

Bus

S	= Single-phase 3/8-inch copper busbar
F	= Three-phase 3/8-inch copper busbar
C	= Single-phase 3/8-inch Canadian busbar
T	= Three-phase 3/8-inch Canadian busbar
M	= Single-phase 300 kcmil mechanical lug bus
Z	= Three-phase 300 kcmil mechanical lug bus
L	= Single-phase 350 kcmil mechanical lug bus
P	= Three-phase 350 kcmil mechanical lug bus
N	= Single-phase 1/4-inch copper busbar
Q	= Single-phase 1/4-inch split mechanical busbar
A	= Single-phase 300 kcmil mechanical lug Canadian bus
B	= Three-phase 300 kcmil mechanical lug Canadian bus
D	= Single-phase 350 kcmil mechanical lug Canadian bus
E	= Three-phase 350 kcmil mechanical lug Canadian bus

Receptacle: R1S1 = Receptacle 1, Side 1
R2S1 = Receptacle 2, Side 1
R3S1 = Receptacle 3, Side 1
R1S2 = Receptacle 1, Side 2
R2S2 = Receptacle 2, Side 2
R3S2 = Receptacle 3, Side 2

Notes

① Number represents the quantity of 1/4-turn ball valves with 3/4-inch hose bibs.

Internet option also available. Contact factory for details.

Accessories

See **Page V1-T5-75**.

Dimensions

Approximate Dimensions in Inches (mm)

Powerhouse—Stainless Steel (SS)

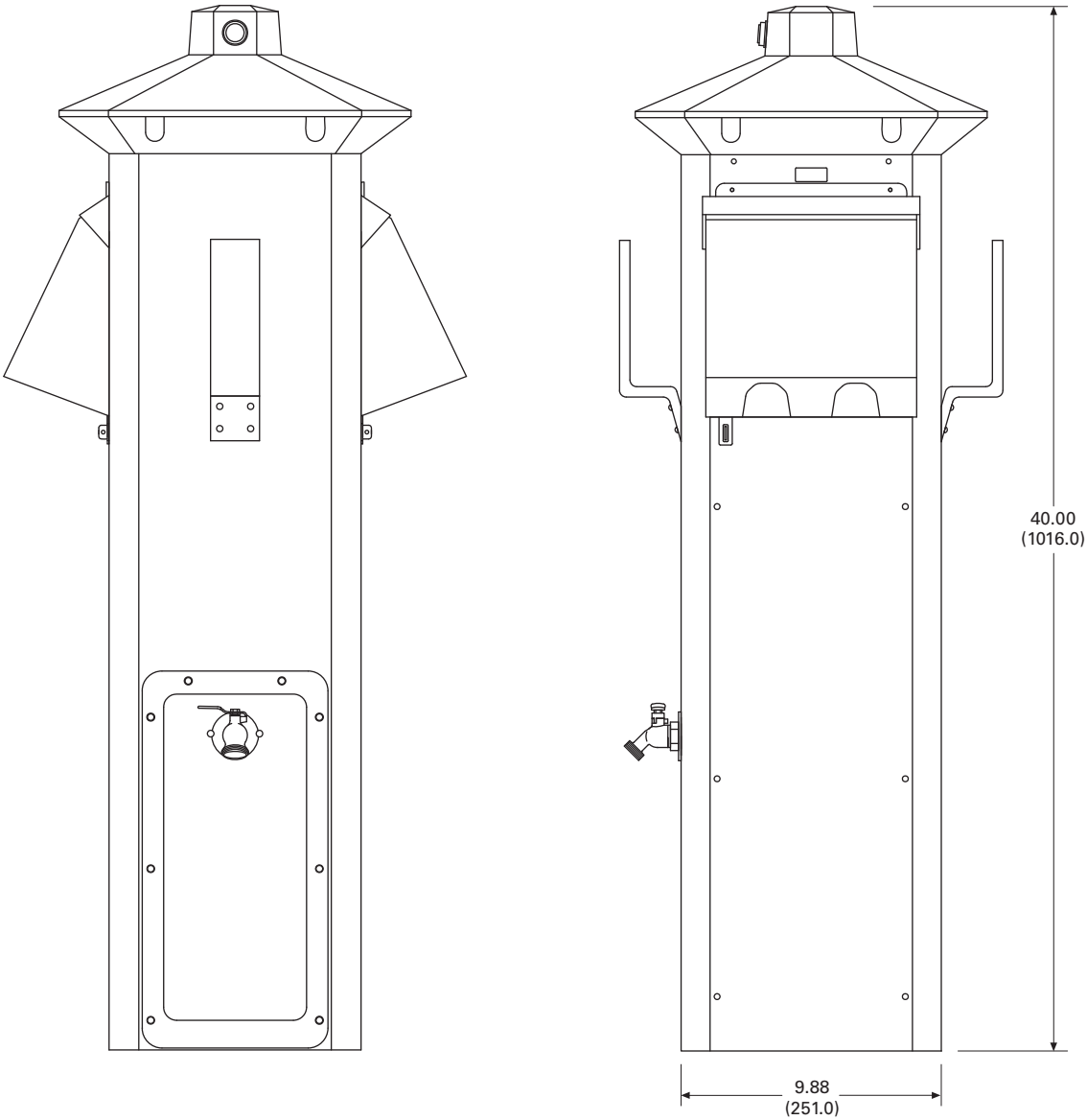

Newport Camp Mate Power Pedestal

Contents

Description	*Page*
Power Pedestals	**V1-T5-28**
Powerhouse Power Pedestal	**V1-T5-30**
Powerhouse—Stainless Steel (SS) Power Pedestal	**V1-T5-33**
Newport Camp Mate Power Pedestal	
Catalog Number Selection	**V1-T5-37**
Accessories	**V1-T5-38**
Dimensions	**V1-T5-38**
Park Light Power Pedestal	**V1-T5-39**
Firehouse	**V1-T5-42**
Digital Electronic Kilowatthour Meters	**V1-T5-44**
Distribution Equipment—Ground Fault Monitor	**V1-T5-45**
Distribution Equipment—Substations	**V1-T5-46**
Distribution Equipment—Panels	**V1-T5-49**
Distribution Equipment—Transformers	**V1-T5-50**

Newport Camp Mate Power Pedestal

Product Description

The Newport Camp Mate provides many of the features and options of our other full-size pedestals, but in a compact self-contained unit. This model provides more mounting options to RV park owners than any other model. It can be mounted to our stainless steel stand either flanged or direct burial, a post or any wall.

It comes standard with a resin housing that will never rust or deteriorate and provides area lighting as well as aiding in hooking up at night. This unit is especially suitable to many RV park renovation projects as well as new RV parks.

Features

- Photocell controlled 7 watt fluorescent light with amber lens
- Lockable weatherproof door that protects receptacles and breakers
- Engineered resin housing
- Limited lifetime warranty on the housing
- Designed to mount on a post, wall or an optional custom stand
- Loop-feed 1/4-inch copper stud lug busbars that can accept 2/0 AWG wire for Camp Mate without optional stand
- Loop-feed mechanical busbars that can accept up to 2/0 AWG wire for Camp Mate on optional stand

Available Options

- 36-inch stainless steel stand
- 40-inch stainless steel pad-mounted stand
- 60-inch direct burial stainless steel stand
- Telephone (RJ-11)
- Cable TV
- High-speed Internet connector (RJ-45)
- Water—single or dual 1/4-turn brass ball valves (brass "T" connection) with 3/4-inch hose bibs mounted on optional stand
- Water—anti-siphon backflow preventer
- Loop feed 3/8-inch stud lug copper busbar for up to 350 kcmil wire with stand (recommended for salt water environments)
- Single-feed mechanical busbars for up to 350 kcmil wire available with stand
- Digital electronic meter
- Wireless remote reading of electronic kilowatt meter
- Meter socket available with aluminum stands (to accept glass style meter)

Standards and Certifications

The Newport Camp Mate is UL listed and comes with a limited lifetime warranty on the housing.

Listed

Catalog Number Selection

C A Y B U 4 3 0 1 1 2 W M

Type

N	= NP Harbor Mate
C	= NP Camp Mate

Photocell

Y	= Yes
N	= No

Lighting and Lens Color

A	=	7 W light	Amber
C	=	9 W light	Amber
F	=	No lighting	Amber
G	=	7 W light	Clear
I	=	9 W light	Clear
L	=	No lighting	Clear
M	=	7 W light	Special
O	=	9 W light	Special
R	=	No lighting	Special
S	=	350 MA LED	Amber
T	=	700 MA LED	Amber
U	=	350 MA LED	Clear
V	=	700 MA LED	Clear
W	=	350 MA LED	Special
Y	=	700 MA LED	Special

Lighting Protection

B	= Breaker protected
F	= Fuse protected

Metering Type ①

U	= Unmetered
D	= Digital electronic meters
R	= Receptacles metered individually

Sides and Receptacles

R1S1	R2S1	R3S1
0	**0**	**0**
1	**1**	**1**
2	**2**	
3	**3**	
4	**4**	

0	= None
1	= 20 A GFI duplex
2	= 30 A, 125 V
3	= 50 A, 125 V
4	= 50 A, 125/250 V

Stand

0	= 0
1	= 1

Water Option ②

0	= 0
1	= 1
2	= 2

Hard Wired Breakers

S1

0	= None
2	= 20 A, two-pole
3	= 30 A

Bus

S	= Single-phase 1/4-inch copper busbar
F	= Three-phase 1/4-inch copper busbar
C	= Single-phase 1/4-inch Canadian busbar
M	= Mechanical lug 2/0
Q	= Single-phase 1/4-inch split mechanical busbar (with stand ONLY)
A	= 1/4-inch Canadian mechanical

Phone Cable TV and Internet Options

	Phone Jack	Cable TV Jack	Internet Option
A =	1	0	0
B =	1	0	1
C =	1	0	2
D =	1	1	0
E =	1	1	1 (Camp Mate only)
T =	0	0	1
V =	0	1	0
W =	0	1	1
0 =	0	0	0

Receptacle: R1 = Receptacle 1
R2 = Receptacle 2
R3 = Receptacle 3

Notes

① 20 A GFIs not metered.

② Number represents the quantity of 1/4-turn ball valves with 3/4-inch hose bibs (with stand only).

Accessories

See **Page V1-T5-75**.

Dimensions

Approximate Dimensions in Inches (mm)

Newport Camp Mate

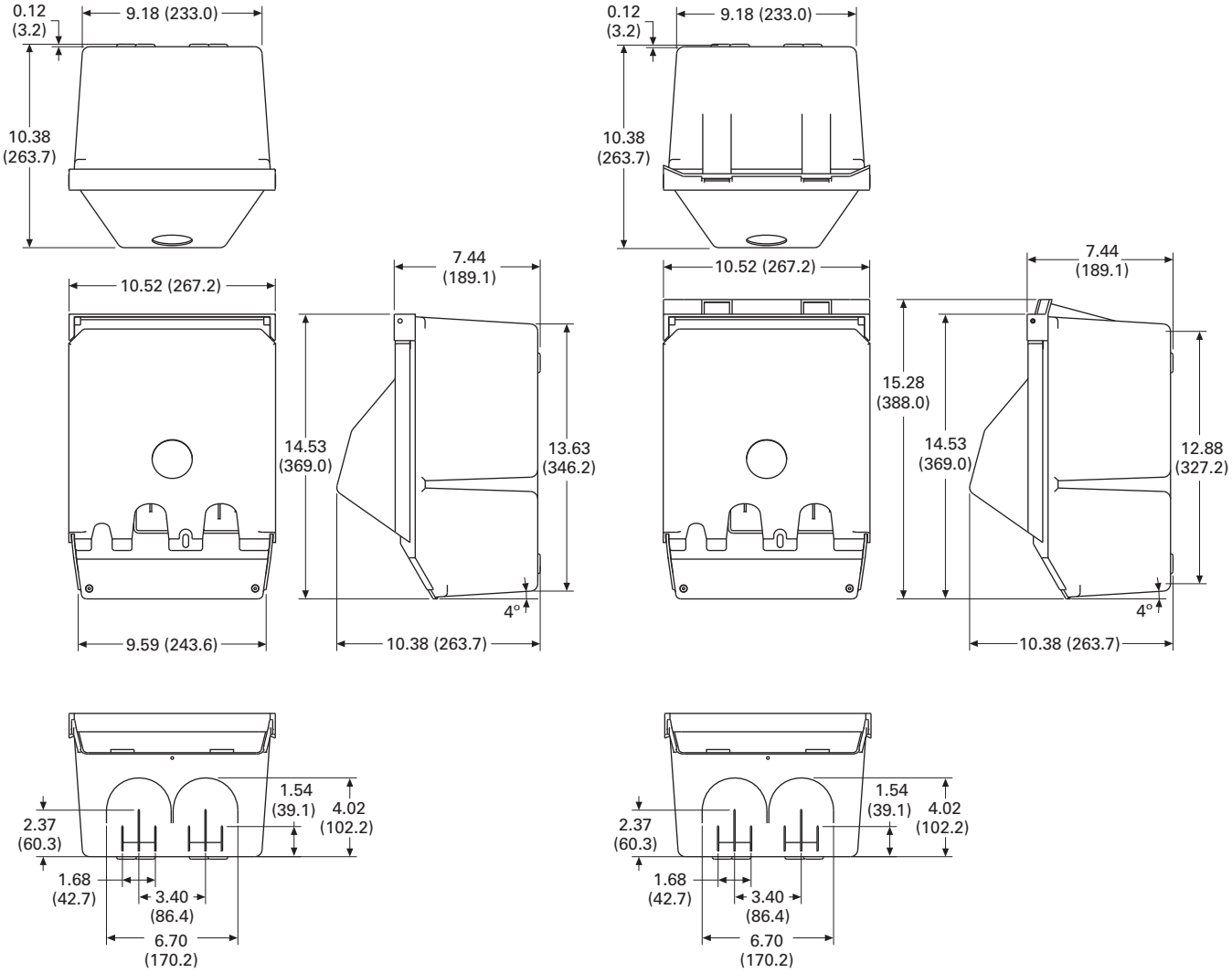

Newport Redesign

Newport Redesign With Meters

Park Light Power Pedestal

Contents

Description	*Page*
Power Pedestals	**V1-T5-28**
Powerhouse Power Pedestal	**V1-T5-30**
Powerhouse—Stainless Steel (SS) Power Pedestal	**V1-T5-33**
Newport Camp Mate Power Pedestal	**V1-T5-36**
Park Light Power Pedestal	
Catalog Number Selection	**V1-T5-40**
Accessories	**V1-T5-41**
Dimensions	**V1-T5-41**
Firehouse	**V1-T5-42**
Digital Electronic Kilowatthour Meters	**V1-T5-44**
Distribution Equipment—Ground Fault Monitor	**V1-T5-45**
Distribution Equipment—Substations	**V1-T5-46**
Distribution Equipment—Panels	**V1-T5-49**
Distribution Equipment—Transformers	**V1-T5-50**

Park Light Power Pedestal

Product Description

The elegant design of the Park Light complements park landscaping and provides essential lighting required for park safety and security for campground paths, walkways, recreational areas and even pools. The Park Light has the same 360 degree lighting design as the Powerhouse and a resin housing that will never rust or deteriorate.

At 10¢/kWH, it will provide area lighting at a cost of less than 50¢/month and the bulbs will last for about three years. The Park Light is a perfect lighting fixture for any campground and especially for RV parks with Powerhouse utility centers.

Features

- Photocell controlled dual 13 watt fluorescent light with amber lens
- Engineered resin housing with a two-part polyurethane coating for a UV-resistant, long-lasting finish
- Limited lifetime warranty on the housing
- Loop-feed 1/4-inch stud lug copper busbars that can accept 2/0 AWG wire

Available Options

- Clear lens
- Photocell controlled single or dual 7 watt or 13 watt fluorescent light
- Phone (RJ-11)
- Cable TV
- High-speed Internet (RJ-45)
- Water faucet(s) with 3/4-inch hose bib
- Water—anti-siphon backflow preventer
- Digital electronic meter
- Wireless remote reading of electronic kilowatt meter
- Direct burial ground mounting stand
- Custom paint color

Standards and Certifications

The housing has a limited lifetime warranty, and the unit is UL listed.

Listed

Catalog Number Selection

H D Y B D 4 7 0 1 2 A M

Type

H	= Hatteras Light
R	= Park Light

Photocell

Y	= Yes
N	= No

Lighting Protection

B	= Breaker protected
F	= Fuse protected

Metering Type ①

U	= Unmetered
D	= Digital electronic meters
R	= Receptacles metered individually

Lighting and Lens Color

A	= 7 W light	Amber
B	= Dual 7 W light	Amber
C	= 9 W light	Amber
D	= 13 W light	Amber
E	= Dual 13 W light	Amber
F	= No lighting	Amber
G	= 7 W light	Clear
H	= Dual 7 W light	Clear
I	= 9 W light	Clear
J	= 13 W light	Clear
K	= Dual 13 W light	Clear
L	= No lighting	Clear
M	= 7 W light	Special
N	= Dual 7 W light	Special
O	= 9 W light	Special
P	= 13 W light	Special
Q	= Dual 13 W light	Special
R	= No lighting	Special
S	= 350 MA LED	Amber
T	= 700 MA LED	Amber
U	= 350 MA LED	Clear
V	= 700 MA LED	Clear
W	= 350 MA LED	Special
Y	= 700 MA LED	Special

Sides and Receptacles

R1S1	R2S1	R1S2
0	**0**	**0**
1	**1**	**1**
2	**2**	**2**
3	**3**	**3**
4	**4**	**4**

0	= None
1	= 20 A GFI duplex
2	= 30 A, 125 V
3	= 50 A, 125 V
4	= 50 A, 125/250 V

Water Option ②

0	= 0
1	= 1 (1/2-inch)
2	= 2 (1/2-inch)
3	= 1 (3/4-inch)
4	= 2 (3/4-inch)

Hard Wired Breakers

S1

0	= None
2	= 20 A, two-pole
3	= 30 A

Bus

S	= Single-phase 1/4-inch copper busbar
F	= Three-phase 1/4-inch copper busbar
C	= Single-phase 1/4-inch Canadian busbar
M	= Mechanical lug 2/0
A	= 1/4-inch Canadian mechanical

Phone Cable TV and Internet Options

Phone Jack	Cable TV Jack	Internet Option
A = 1	0	0
B = 1	0	1
C = 1	0	2
D = 1	1	0
E = 1	1	1
F = 1	1	2
G = 1	2	0
H = 1	2	1
I = 1	2	2
J = 2	0	0
M = 2	1	0
P = 2	2	0
S = 0	2	2
T = 0	0	1
U = 0	0	2
V = 0	1	0
W = 0	1	1
X = 0	1	2
Y = 0	2	0
Z = 0	2	1

Receptacle: R1 = Receptacle 1, Side 1
R2 = Receptacle 2, Side 2

Notes

① 20 A GFIs not metered.

② Number represents the quantity of 1/4-turn ball valves with 3/4-inch hose bibs (with stand only).

Accessories

See **Page V1-T5-75**.

Dimensions

Approximate Dimensions in Inches (mm)

Park Light

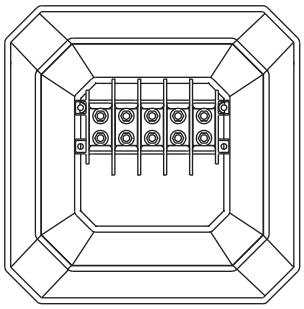

Busbar Access Top Removed

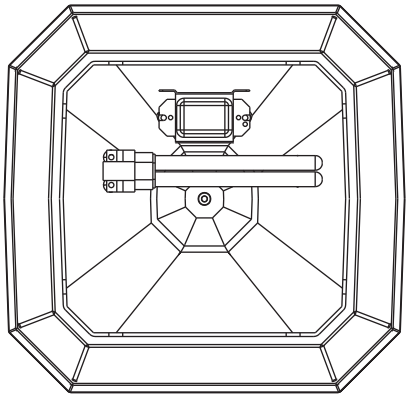

Inside Top

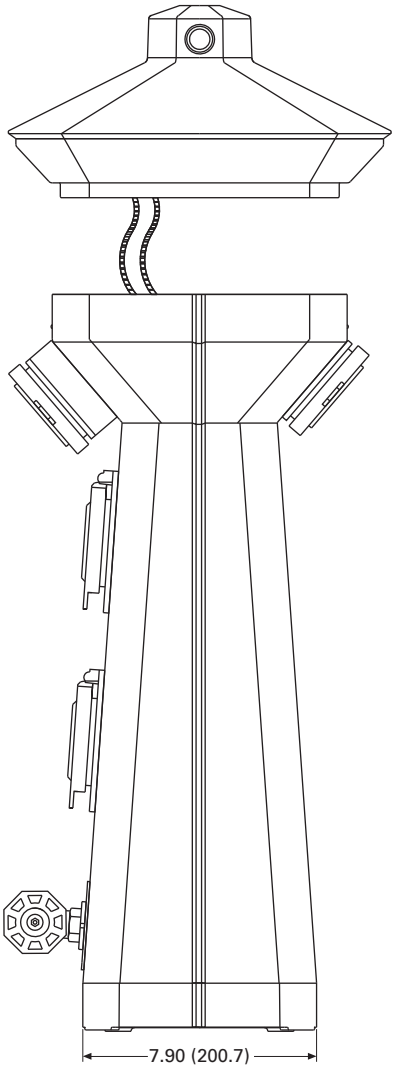

Side View

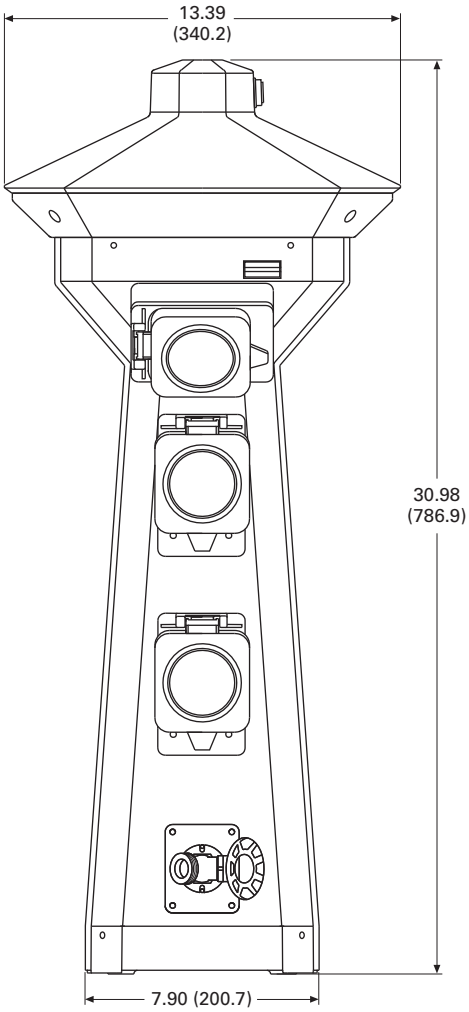

Front View

Firehouse

Contents

Description	*Page*
Power Pedestals	**V1-T5-28**
Powerhouse Power Pedestal	**V1-T5-30**
Powerhouse—Stainless Steel (SS) Power Pedestal	**V1-T5-33**
Newport Camp Mate Power Pedestal	**V1-T5-36**
Park Light Power Pedestal	**V1-T5-39**
Firehouse	
Accessories	**V1-T5-43**
Dimensions	**V1-T5-43**
Digital Electronic Kilowatthour Meters	**V1-T5-44**
Distribution Equipment—Ground Fault Monitor	**V1-T5-45**
Distribution Equipment—Substations	**V1-T5-46**
Distribution Equipment—Panels	**V1-T5-49**
Distribution Equipment—Transformers	**V1-T5-50**

Firehouse

Product Description

The Firehouse is designed to provide added fire safety to RV parks and campgrounds. The Firehouse provides a convenient location and easy access to fire extinguishers and to an optional life ring when installed around pools and waterfront amenities.

In addition, the Firehouse provides area lighting for easy identification during an emergency and for security lighting around the unit. The Firehouse can be equipped with an alarm strobe light and siren, which are automatically activated when the fire extinguisher cabinet door is opened or the optional life ring is removed.

Features

- Photocell controlled 13 watt fluorescent light
- Amber lens for bug reduction
- 10 lb ABC Type fire extinguisher
- Stainless steel housing with oven-baked enamel finish with an engineered resin base and top
- Limited lifetime warranty on the housing

Available Options

- Alarm strobe light and siren
- Optional 24-inch white or orange life ring for poolside or dockside installations
- 20 lb ABC Type fire extinguisher

Catalog Number Selection

F A Y A E N

Type
F = Firehouse

Photocell
Y = Yes
N = No

Alarm/Strobe
A = Include alarm/strobe
N = No alarm/strobe

Fire Extinguisher
E = Include 10 lb extinguisher
N = No extinguisher
X = Include 20 lb extinguisher

24-Inch Life Ring
R = Include life ring
N = No life ring

Lighting and Lens Color

A = 7 W light	Amber	**I** = 9 W light	Clear	**Q** = Dual 13 W light	Special
B = Dual 7 W light	Amber	**J** = 13 W light	Clear	**R** = No lighting	Special
C = 9 W light	Amber	**K** = Dual 13 W light	Clear	**S** = 350 MA LED	Amber
D = 13 W light	Amber	**L** = No lighting	Clear	**T** = 700 MA LED	Amber
E = Dual 13 W light	Amber	**M** = 7 W light	Special	**U** = 350 MA LED	Clear
F = No lighting	Amber	**N** = Dual 7 W light	Special	**V** = 700 MA LED	Clear
G = 7 W light	Clear	**O** = 9 W light	Special	**W** = 350 MA LED	Special
H = Dual 7 W light	Clear	**P** = 13 W light	Special	**Y** = 700 MA LED	Special

Accessories

See **Page V1-T5-75**.

Dimensions

Approximate Dimensions in Inches (mm)

Firehouse–SS

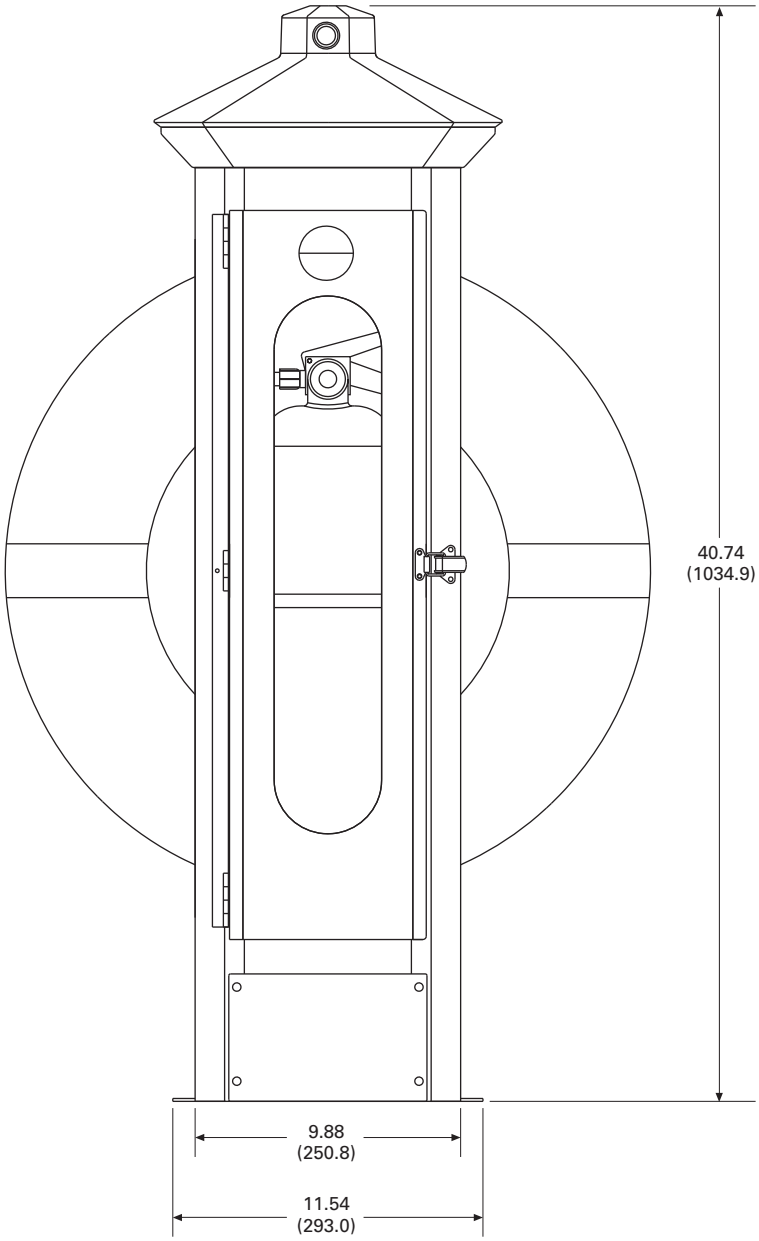

Digital Electronic Kilowatthour Meters

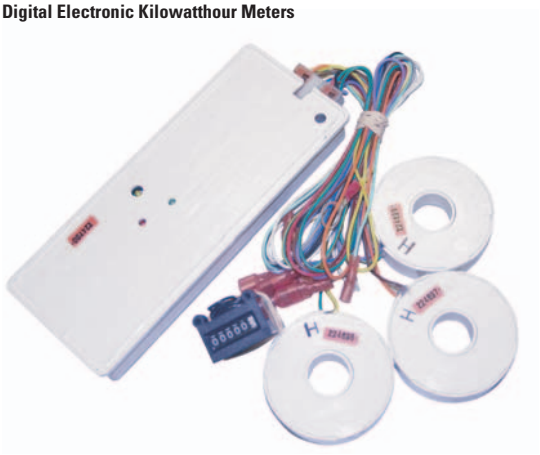

Contents

Description	*Page*
Power Pedestals	**V1-T5-28**
Powerhouse Power Pedestal	**V1-T5-30**
Powerhouse—Stainless Steel (SS) Power Pedestal	**V1-T5-33**
Newport Camp Mate Power Pedestal	**V1-T5-36**
Park Light Power Pedestal	**V1-T5-39**
Firehouse	**V1-T5-42**
Digital Electronic Kilowatthour Meters	
Distribution Equipment—Ground Fault Monitor	**V1-T5-45**
Distribution Equipment—Substations	**V1-T5-46**
Distribution Equipment—Panels	**V1-T5-49**
Distribution Equipment—Transformers	**V1-T5-50**

Digital Electronic Kilowatthour Meters

Product Description

Using the latest surface mount technology, Eaton manufactures a digital electronic kilowatt hour meter that exceeds the +/– 2% accuracy required by ANSI (American National Standards Institute) C-12.1 and is approved by the state of California at +/– 1% over the full range of 0–100 A from a 0.5 to 1 power factor and is available for both single- and three-phase applications.

The meter drives an electro-mechanical counter that requires a 12 V pulse each tenth of a kilowatthour, providing 10 pulses per kilowatt used. The meter output can be hard wired or connected to a transmitter in the pedestal for wireless transmission to a receiver displaying the output on a PC for direct billing of up to 1,000 individual customers.

Features

Our meter is designed to be user friendly in that all connections from external sources and the meter output are through one 14-pin locking connector. This feature eliminates many common problems, such as reverse line polarity and improper coil polarity. Simple LEDs, both red and green, indicate line and load condition and the pulsed LED indicates the rate of power consumption.

Wireless System

All of our meters are "wireless capable" to allow for wireless meter reading. This technology enables the marina or RV park to get meter readings from one central location rather than visiting every site to read the counters.

Meter Socket Capabilities

Meter sockets are available on the Powerhouse and Powerhouse–SS.

Standard:

- Four jaw
- Ring-type
- 100 A

Available Options

- 200 A (SS only)
- Lockable hasp
- Ringless (SS only)
- Five jaw
- Seven jaw (SS only)

Product Selection

One Element Meter

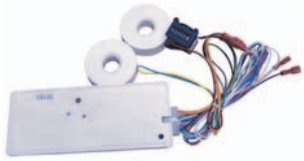

Two Element Meter

Three Element Meter

Ground Fault Monitor

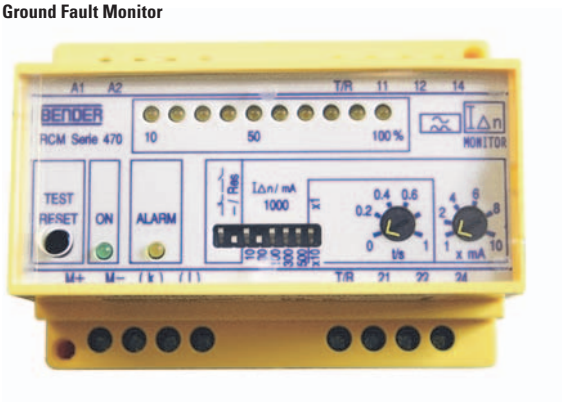

Contents

Description	*Page*
Power Pedestals	**V1-T5-28**
Powerhouse Power Pedestal	**V1-T5-30**
Powerhouse—Stainless Steel (SS) Power Pedestal	**V1-T5-33**
Newport Camp Mate Power Pedestal	**V1-T5-36**
Park Light Power Pedestal	**V1-T5-39**
Firehouse	**V1-T5-42**
Digital Electronic Kilowatthour Meters	**V1-T5-44**
Distribution Equipment—Ground Fault Monitor	
Distribution Equipment—Substations	**V1-T5-46**
Distribution Equipment—Panels	**V1-T5-49**
Distribution Equipment—Transformers	**V1-T5-50**

Distribution Equipment—Ground Fault Monitor

Product Description

New to our product offering are ground fault monitoring systems designed to detect fault currents in the AC shore power system that are too low to trip a circuit breaker. The Ground Fault Monitor helps reduce the risk of injury or property damage, which may result from stray fault currents. Our ground fault monitoring system provides information to the maintenance staff on the overall condition of the AC electrical system. The ground fault monitoring system operates 24 hours a day and can be monitored by non-technical personnel.

Features

- UL listed current transformers
- Adjustable trip level 10 mA to 10 A
- Current transformers up to 8 1/4-inch diameter
- Visual and/or audible alarm
- Housing of fiberglass or powder coated stainless steel available

Power Guard

The ground fault monitor detects ground fault currents by means of current transformers (CT), which are placed around main or branch circuits. If a ground fault occurs, the CT will detect the amount of fault current and send a signal to the ground fault monitoring device where the amount of fault current is displayed with the faulty circuit identified. The detected fault can either activate an indicator alarm or disconnect the faulted circuit.

Substations

Side-by-Side Substation

Contents

Description	*Page*
Power Pedestals	**V1-T5-28**
Powerhouse Power Pedestal	**V1-T5-30**
Powerhouse—Stainless Steel (SS) Power Pedestal	**V1-T5-33**
Newport Camp Mate Power Pedestal	**V1-T5-36**
Park Light Power Pedestal	**V1-T5-39**
Firehouse	**V1-T5-42**
Digital Electronic Kilowatthour Meters	**V1-T5-44**
Distribution Equipment—Ground Fault Monitor	**V1-T5-45**
Distribution Equipment—Substations	
Features, Benefits and Functions	**V1-T5-47**
Available Options	**V1-T5-48**
Standards and Certifications	**V1-T5-48**
Dimensions	**V1-T5-48**
Distribution Equipment—Panels	**V1-T5-49**
Distribution Equipment—Transformers	**V1-T5-50**

Distribution Equipment—Substations

Product Description

The introduction of substations into the marina and recreational vehicle market allows Eaton to be your complete marina and RV park electrical products supplier. We are able to assist in the design and layout of your marina or RV park electrical system from the primary service provider to your power pedestal. Our substations are designed for any coastal or inland environment and are constructed of powder-coated stainless steel NEMA 3R housing cabinets. All substation cabinets come with our limited lifetime warranty. All of our substations use Eaton's panels and circuit breakers, providing our customers the utmost in circuit protection and quality.

Application Description

The aluminum and Galvaneal cabinets are recommended for inland applications. The substations can be configured with 50 to 330 kVA single-phase or three-phase copper wound transformers and up to 20 single-phase or 12 three-phase branch breakers. An optional three-sided double-wall cabinet is available that provides air flow between the panels. All substations come standard with temperature-controlled cooling fans.

Product Selection Guide

Panel and Transformer Combinations

Panel	Transformer
Single-Phase	
200 A	50 kVA
300 A	75 kVA
400 A	100 kVA
600 A	150 kVA
700 A	167.5 kVA
800 A	200 kVA
1000 A	250 kVA
1200 A	330 kVA
Three-Phase	
100 A	45 kVA
200 A	75 kVA
300 A	112.5 kVA
400 A	150 kVA
600 A	225 kVA
800 A	300 kVA

Features, Benefits and Functions

- Limited lifetime warranty on the housing
- All stainless steel hardware
- Temperature controlled cooling fans in the transformer and circuit breaker compartments
- Lockable door

Ventilation

The substation ventilation is designed to optimize air circulation over and around the transformers and through the panel compartment so that the substation operates at lower temperatures.

Substations come equipped with temperature-controlled cooling fans for exhausting hot air from the cabinet and solar shield.

In addition, substations are available with a double-walled cabinet and solar shield, which allow for cooling of both the exterior surface of the cabinet and the internal components.

Substations

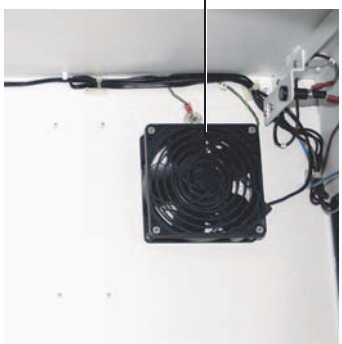

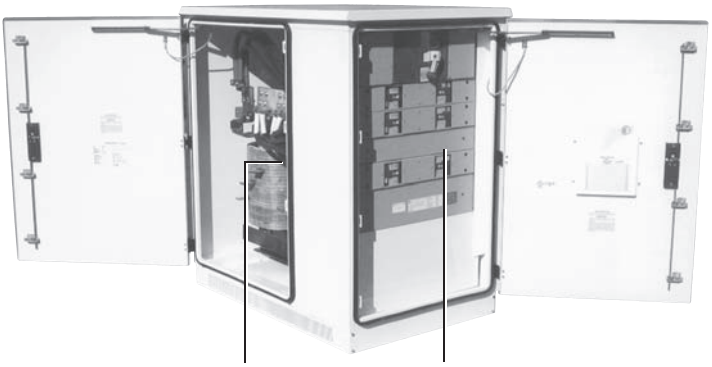

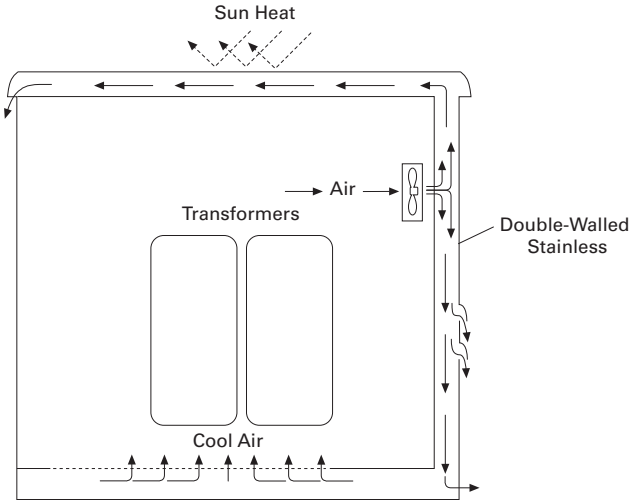

Double-Walled Construction

Available Options

- Powder-coated cabinets made of stainless steel or fiberglass
- Limited lifetime warranty on housing. Transformer and secondary distribution panel in a single enclosure have a one-year limited warranty
- Stainless steel housing and hardware with locking doors
- Single-phase and three-phase models
- Overload capacity meets ANSI L57.96–01.250
- Optional double-walled construction
- Temperature-controlled fans for cooling
- Custom-made copper wound single-phase or three-phase transformers from 50 to 330 kVA
- Up to 1200 A main circuit breaker with 15 single-phase branch circuit breakers or 10 three-phase branch circuit breakers
- Substations can be equipped with photocells to turn on and off lights
- A 20 A GFI can be installed in the cabinet, as well as a ground fault monitoring system

Standards and Certifications

- cULus listed

c UL us
Listed

Dimensions

Approximate Dimensions in Inches (mm)

Substations

Standard Substation	
Height	53.00 (1346.2)
Width	51.00 (1295.4)
Depth	33.00 (838.2)
Side-by-Side Substation	
Height	53.00 (1346.2)
Width	66.00 (1676.4)
Depth	30.00 (762.0)
Double Panel Substation	
Height	53.00 (1346.2)
Width	63.00 (1600.2)
Depth	33.00 (838.2)

Panels

Contents

Description	*Page*
Power Pedestals	**V1-T5-28**
Powerhouse Power Pedestal	**V1-T5-30**
Powerhouse—Stainless Steel (SS) Power Pedestal	**V1-T5-33**
Newport Camp Mate Power Pedestal	**V1-T5-36**
Park Light Power Pedestal	**V1-T5-39**
Firehouse	**V1-T5-42**
Digital Electronic Kilowatthour Meters	**V1-T5-44**
Distribution Equipment—Ground Fault Monitor	**V1-T5-45**
Distribution Equipment—Substations	**V1-T5-46**
Distribution Equipment—Panels	
Distribution Equipment—Transformers	**V1-T5-50**

Distribution Equipment—Panels

Product Description

We now can offer our customers Eaton's PRL-3A and PRL-4 panels as stand-alone units or in one of our substations. All of our busses are made of copper and are load rated, breakers are bolt-on type. Distribution panels can be single-phase or three-phase based on your system requirements. Distribution panels can also have a main breaker or a main lug. Branch circuit breakers are provided based on customer requirements.

Features

- All internal wiring is fine stranded 2000 V insulated copper
- Copper busbars
- All exterior hardware is stainless steel

Available Options

- NEMA 3R or 4X
- Powder-coated stainless steel
- Main breaker up to 1200 A
- Branch breaker 20 to 1200 A
- Main lug only
- We also offer 480 V models—single-phase and three-phase

Single-Phase

- Up to 1200 A main circuit breakers
- Up to 42 branch circuit breakers

Three-Phase

- Up to 1200 A main circuit breakers
- Up to 42 branch circuit breakers

Standards and Certifications

- UL listed
- cULus listed

Listed

Transformers

Contents

Description	*Page*
Power Pedestals	**V1-T5-28**
Product Selection Guide	**V1-T5-29**
Powerhouse Power Pedestal	**V1-T5-30**
Powerhouse—Stainless Steel (SS) Power Pedestal	**V1-T5-33**
Newport Camp Mate Power Pedestal	**V1-T5-36**
Park Light Power Pedestal	**V1-T5-39**
Firehouse	**V1-T5-42**
Digital Electronic Kilowatthour Meters	**V1-T5-44**
Distribution Equipment—Ground Fault Monitor	**V1-T5-45**
Distribution Equipment—Substations	**V1-T5-46**
Distribution Equipment—Panels	**V1-T5-49**
Distribution Equipment—Transformers	

Distribution Equipment—Transformers

Product Description

Because of the high humidity and corrosive conditions of coastal environments, our transformers are wound with Class H heavily insulated copper bar and are double dipped in tough insulating varnish that protects the copper, as well as reduces the hum that is typical in a transformer that is not double dipped. For marine applications, we provide a third overcoat of high temperature epoxy to protect against the severe saltwater environment. We can provide this transformer in single-phase, from 50 to 500 kVA, and three-phase, from 45 to 300 kVA.

Features

- Copper wound transformer coils double dipped in high temperature baking varnish
- Copper terminations
- Marine transformers with epoxy overcoat
- All copper-to-copper connections

Available Options

- Single-phase: 50–500 kVA
- Three-phase: 45–300 kVA
- Epoxy overcoat for non-marine applications

Primary Voltages

- 480 wye three-phase
- 480 V three-phase delta three-wire + ground
- 480 V single-phase two-wire + ground

Secondary Voltages

- 127/220 V three-phase wye four-wire
- 120/208 V three-phase wye four-wire
- 120/240 V single-phase three-wire

Marina Power Distribution Transformer kVA Availabilities

- Single-phase: 50, 75, 100, 150, 167.5, 200, 250, 330, 500 kVA
- Three-phase: 45, 75, 112.5, 150, 225, 300 kVA

Standards and Certifications

- cULus listed

c UL us Listed

Marina Power and Lighting Equipment

High-Quality, Weatherproof Electrical Equipment

Contents

Description	*Page*
Power Pedestals	
Product Selection Guide	**V1-T5-52**
Lighthouse	**V1-T5-54**
Lighthouse–SS	**V1-T5-58**
Admiral–SS	**V1-T5-62**
Newport Harbor Mate	**V1-T5-65**
Hatteras Light	**V1-T5-69**
Firehouse	**V1-T5-73**
Smart Start	**V1-T5-79**
Mariner	**V1-T5-80**
Digital Electronic Kilowatthour Meters	**V1-T5-81**
Distribution Equipment—Ground Fault Monitor	**V1-T5-82**
Distribution Equipment—Mega Yacht Powerpoint	**V1-T5-83**
Distribution Equipment—Substations	**V1-T5-86**
Distribution Equipment—Panels	**V1-T5-89**
Distribution Equipment—Transformers	**V1-T5-90**

Learn Online

Power Pedestals

Product Overview

Known as a leader in electrical control, power distribution, and industrial automation products and services, Eaton is a quality driven company that constantly looks for ways to provide enhanced product and service solutions for their customers. Eaton will be able to provide Marina developers a complete electrical solution. For more information on the other products available from Eaton, visit us online at www.eaton.com or www.marinapower.com.

What Eaton has to Offer

- Eaton has more marina power outlets in service than all other suppliers combined
- We offer complementary comprehensive in-house electrical designs for your complete marina development using all high quality Eaton products
- We can provide your marina development with complete remote wireless digital electronic meter reading
- Not only can Eaton provide your marina with the highest quality power pedestals and marine distribution equipment, we can also supply your entire electrical needs for your surrounding development and beyond from safety switches to loadcenters and much more

Product Selection Guide

Power Pedestal Quick Guide

	Lighthouse	Lighthouse–SS	Hatteras Light	Newport Harbor Mate	Admiral–SS	Firehouse	Mariner	Lookout	Power Point
Main housing	Engineered resin	Stainless steel	Engineered resin	Engineered resin	Stainless steel	Stainless steel	Engineered resin	Stainless steel	Stainless steel
Top	Engineered resin	Engineered resin	Engineered resin	Engineered resin	Stainless steel	Engineered resin	Engineered resin	Stainless steel	Stainless steel
Optional stand	—	—	—	Stainless steel	—	—	PVC	—	—
External hardware	Stainless steel	Stainless steel	Stainless steel	Stainless steel	Stainless steel	Stainless steel	Stainless steel	Stainless steel	Stainless steel
Standard lightwattage(s)	13 W	13 W	13 W	7 W	13 W	13 W	5 W, 7 W & 13 W	—	13 W
LED lighting option	Yes	Yes	Yes	No	Yes	Yes	No	No	Yes
Photocell	Yes	Yes	Yes	Yes	Yes	Yes	No	No	Yes
Lockable doors	Yes	Yes	Yes	Yes	Yes	—	—	—	Yes
Hose hangers	Yes	Yes	No	No	Yes	No	No	No	No
Electric meters	Yes—up to 4	Yes—up to 4	Yes—up to 2	Yes—up to 2	Yes—up to 4	No	No	No	Yes—up to 6
Remote meter reading	Yes	Yes	Yes	Yes	Yes	No	No	No	Yes
Water	Two 3/4″	Two 3/4″	Two 1/2″	Two 3/4″	Two 3/4″	None	None	None	One 3/4″ or more
Water meters	Yes	Yes	No	Yes	Yes	No	No	No	Yes
Telephone	Yes	Yes	Yes	Yes	Yes	No	No	No	Yes
Cable TV	Yes	Yes	Yes	Yes	Yes	No	No	No	Yes
Internet	Yes	Yes	Yes	Yes	Yes	No	No	No	Yes
Fire extinguisher	No	No	No	No	No	Yes—up to 20 lbs	No	No	No
Life ring	No	No	No	No	No	Yes—24″	No	No	No
Alarm and strobe light	No	No	No	No	No	Yes	No	No	No
20 A 110 V GFI	Yes	Yes	Yes	Yes	Yes	No	No	No	Yes
30 A 125 V twist—lock	Yes	Yes	Yes	Yes	Yes	No	No	No	Yes
50 A 125/250 V twist—lock	Yes	Yes	Yes	Yes	Yes	No	No	No	Yes
100 A 120/240 V pin and sleeve	Yes	Yes	No	No	Yes	No	No	No	Yes
100 A 120/208 V pin and sleeve	Yes	Yes	No	No	Yes	No	No	No	Yes
100 A 277/480 V pin and sleeve	Yes	Yes	No	No	Yes	No	No	No	Yes
100 A 480 V pin and sleeve	Yes	Yes	No	No	Yes	No	No	No	Yes
200 A 480 V pin and sleeve	No	No	No	No	Yes	No	No	No	Yes
Hardwire compatible	No	No	No	No	No	No	No	No	Yes
TVSS compatible	Yes	Yes	No	No	Yes	No	No	No	Yes
Card swipe compatible	Yes	Yes	No	Yes	Yes	No	No	No	Yes
Security camera compatible	No	No	No	No	No	No	No	Yes	No
Busbar rating	Up to 500 A	Up to 500 A	Up to 140 A	Up to 140 A	Up to 500 A	—	—	—	Up to 800 A
Maximum wire size—single feed	350 kcmil	350 kcmil	#2/0	#2/0	350 kcmil	—	—	—	(3) 500 kcmil
Maximum wire size—loop feed	#4/0	#4/0	#1	#1	350 kcmil	—	—	—	(3) 500 kcmil
Height	44″	40″	30″	36″	48″	43.5″	24″ to 72″	72″ to 96″	50″
Width	13.75″	9.875″	7.5″	10.5″	14″	9.875″	7″	9″	50″
Depth	13.75″	9.875″	7.5″	14.5″	14″	9.875″	7″	9″	36″
Warranty									
Housing	Limited lifetime	Limited lifetime	Limited lifetime	Limited lifetime	Limited lifetime	Limited lifetime	Limited lifetime	Limited lifetime	Limited lifetime
Receptacles and breakers	2 years	2 years	2 years	2 years	2 years	—	—	—	2 years
Lighting assembly	1 year	1 year	1 year	1 year	1 year	1 year	1 year	—	1 year

Receptacles

Side One		Side Two	
None	None	None	None
30 A	None	None	None
30 A	30 A	None	None
30 A	None	30 A	None
30 A	30 A	30 A	30 A
30 A	50 A	None	None
30 A	None	50 A	None
30 A	50 A	30 A	50 A
50 A	None	None	None
50 A	50 A	None	None
50 A	None	50 A	None
50 A	50 A	50 A	50 A
100 A 120/240 V	None	None	None
100 A 120/240 V	None	50–50 A	None
100 A 120/240 V	None	100 A 120/240 V	None
100 A 120/240 V	50–50 A	100 A 120/240 V	50–50 A
100 A 120/208 V	None	None	None
100 A 120/208 V	None	100 A 120/240 V	None
100 A 120/240 V	100 A 120/240 V	100 A 120/240 V	100 A 120/240 V
100 A 120/208 V	100 A 120/208 V	100 A 120/208 V	100 A 120/208 V
100 A 120/240 V	100 A 120/240 V	100 A 120/208 V	100 A 120/208 V

Receptacle Configuration Availability

Lighthouse	Lighthouse–SS	Admiral–SS	Hatteras Light	Newport Harbor Mate
Receptacle Available with GFI Receptacles				
Yes	Yes	Yes	Yes	Yes
Yes	Yes	Yes	Yes	Yes
Yes	Yes	Yes	No	Yes
Yes	Yes	Yes	Yes	No
Yes	Yes	Yes	No	No
Yes	Yes	Yes	No	Yes
Yes	Yes	Yes	Yes ①	No
Yes	Yes	Yes	No	No
Yes	Yes	Yes	Yes	Yes
Yes	Yes	Yes	No	Yes
Yes	Yes	Yes	No	No
Yes	Yes	Yes	No	No
Yes	Yes	Yes	No	No
Yes	Yes	Yes	No	No
Yes	Yes	Yes	No	No
No	No	Yes	No	No
Yes	Yes	Yes	No	No
Yes	Yes	Yes	No	No
No	No	Yes	No	No
No	No	Yes	No	No
No	No	Yes	No	No

Note

① Configuration available with no additional GFI receptacles.

Lighthouse

Contents

Description	*Page*
Power Pedestals	**V1-T5-51**
Lighthouse	
Available Options	**V1-T5-55**
Catalog Number Selection	**V1-T5-56**
Accessories	**V1-T5-57**
Dimensions	**V1-T5-57**
Lighthouse–SS	**V1-T5-58**
Admiral–SS	**V1-T5-62**
Newport Harbor Mate	**V1-T5-65**
Hatteras Light	**V1-T5-69**
Firehouse	**V1-T5-73**
Smart Start	**V1-T5-79**
Mariner	**V1-T5-80**
Digital Electronic Kilowatthour Meters	**V1-T5-81**
Distribution Equipment—Ground Fault Monitor	**V1-T5-82**
Distribution Equipment—Mega Yacht Powerpoint	**V1-T5-83**
Distribution Equipment—Substations	**V1-T5-86**
Distribution Equipment—Panels	**V1-T5-89**
Distribution Equipment—Transformers	**V1-T5-90**

Lighthouse

Product Description

One of our most popular units, the all-purpose Lighthouse® pedestal has a wide range of features. With units in service around the world, this stylish power pedestal is recognized for its practicality and exceptional durability.

Engineered to withstand the most severe weather conditions, Lighthouse power pedestals can be found in marinas from Alaska to the tropics.

Note: Custom paint color.

Note: Wireless remote reading of electronic kilowatt meters.

Note: Clear lens.

Features, Benefits and Functions

- Photocell controlled 13 watt fluorescent light (clear lens or amber lens for bug reduction)
- Lockable weatherproof doors that protect breakers and receptacles while in use (a requirement of NFPA 303 and NEC Article 555)
- Hose and cable brackets
- Heavy resin housing with a two-part polyurethane coating for a UV-resistant, long-lasting finish
- Copper busbar with ratings from 250 to 500 A
- New "hingeless" base providing easy access for both installation and maintenance
- Backlit faceplate for easy receptacle plug-in at night

Lighthouse

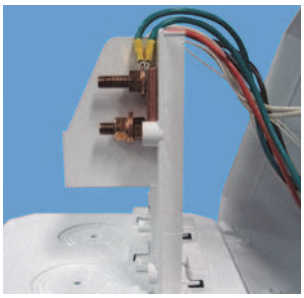

Copper Busbar with Ratings from 250 to 500 A

Cable and Internet Connections

New Hingeless Base

Optional Meter Socket

Available Options

- Digital electronic metering (one, two or three element meters available)
- Built-in meter socket
- 20 A / 125 V GFI receptacle (max. of two GFI receptacles per pedestal)

Note: 20 A GFI receptacles are not to be used for shore power.

- High-speed Internet connections
- Wireless remote metering for electric and water
- Transient voltage surge suppressor (TVSS) to protect from voltage surges, spikes or lightning on the AC power line (extends warranty on internal parts to three years)
- Stainless steel door hinge on receptacle main doors
- Single or dual steel 1/4-turn ball valves with 3/4-inches
- Hose bibs and stainless steel handles
- Single or dual phone and/or cable TV connections
- Base cap
- Base extension
- LED lighting

Catalog Number Selection

L D U 4 7 0 0 0 0 0 0 1 2 K M

Type

L	= Lighthouse
S	= LHSS

Lighting and Lens Color

A	= 7 W light	Amber
B	= Dual 7 W light	Amber
C	= 9 W light	Amber
D	= 13 W light	Amber
E	= Dual 13 W light	Amber
F	= No lighting	Amber
G	= 7 W light	Clear
H	= Dual 7 W light	Clear
I	= 9 W light	Clear
J	= 13 W light	Clear
K	= Dual 13 W light	Clear
L	= No lighting	Clear
M	= 7 W light	Special
N	= Dual 7 W light	Special
O	= 9 W light	Special
P	= 13 W light	Special
Q	= Dual 13 W light	Special
R	= No lighting	Special
S	= 350 MA LED	Amber
T	= 700 MA LED	Amber
U	= 350 MA LED	Clear
V	= 700 MA LED	Clear
W	= 350 MA LED	Special
Y	= 700 MA LED	Special

Metering Type

U	= Unmetered
D	= Digital electronic meters (side one)
T	= Digital electronic meters (side two)
B	= Digital electronic meters (both sides)
R	= Receptacles metered individually
M	= One meter socket (100 A)
N	= Two meter socket (100 A each)
V	= 200 A meter socket

Sides and Receptacles

R1S1	R2S1	R3S1	R4S1	R1S2	R2S2	R3S2	R4S2
0	0	0	0	0	0	0	0
1	1	1	1	1	1	1	1
2	2	2	2	2	2	2	2
3	3	3	3	3	3	3	3
4	4	4	4	4	4	4	4
5	5	5	5	5	5	5	5
6	6	6	6	6	6	6	6
7	7	7	7	7	7	7	7
8	8	8	8	8	8	8	8

0	= None
1	= 20 A GFI duplex
2	= 30 A, 125 V
3	= 50 A, 125 V
4	= 50 A, 125/250 V
5	= 100 A, 208 V
6	= 100 A, 250 V
7	= 100 A, 277/480 V
8	= 100 A, 480 V

Water Option ①

0	= 0
1	= 1
2	= 2
3	= Single water meter
4	= Dual water meter
5	= Single meter, 2 V
6	= 1 frost free
7	= 2 frost free

Extra Unmetered GFI Receptacles ②

0	= None
1	= 1
2	= 2

Phone Cable TV and Internet Options

	Phone Jack	Cable TV Jack	Internet Option
A =	1	0	0
B =	1	0	1
C =	1	0	2
D =	1	1	0
E =	1	1	1
F =	1	1	2
G =	1	2	0
H =	1	2	1
I =	1	2	2
J =	2	0	0
K =	2	0	1
L =	2	0	2
M =	2	1	0
N =	2	1	1
O =	2	1	2
P =	2	2	0
Q =	2	2	1
R =	2	2	2
S =	0	2	2
T =	0	0	1
U =	0	0	2
V =	0	1	0
W =	0	1	1
X =	0	1	2
Y =	0	2	0
Z =	0	2	1
0 =	0	0	0

Bus

S	= Single-phase 3/8-inch copper busbar
F	= Three-phase 3/8-inch copper busbar
C	= Single-phase 3/8-inch Canadian busbar
T	= Three-phase 3/8-inch Canadian busbar
M	= Single-phase 300 kcmil mechanical lug bus
Z	= Three-phase 300 kcmil mechanical lug bus
L	= Single-phase 350 kcmil mechanical lug bus
P	= Three-phase 350 kcmil mechanical lug bus
N	= Single-phase 1/4-inch copper busbar
Q	= Single-phase 1/4-inch split mechanical busbar

Receptacle: R1S1 = Receptacle 1, Side 1
R2S1 = Receptacle 2, Side 1
R1S2 = Receptacle 1, Side 2
R2S2 = Receptacle 2, Side 2

Notes

① Number represents the quantity of 1/4-turn ball valves with 3/4-inch hose bibs.

② Quantity of 20 A GFI duplex receptacles.

Accessories

See **Page V1-T5-75**.

Dimensions

Approximate Dimensions in Inches (mm)

Lighthouse

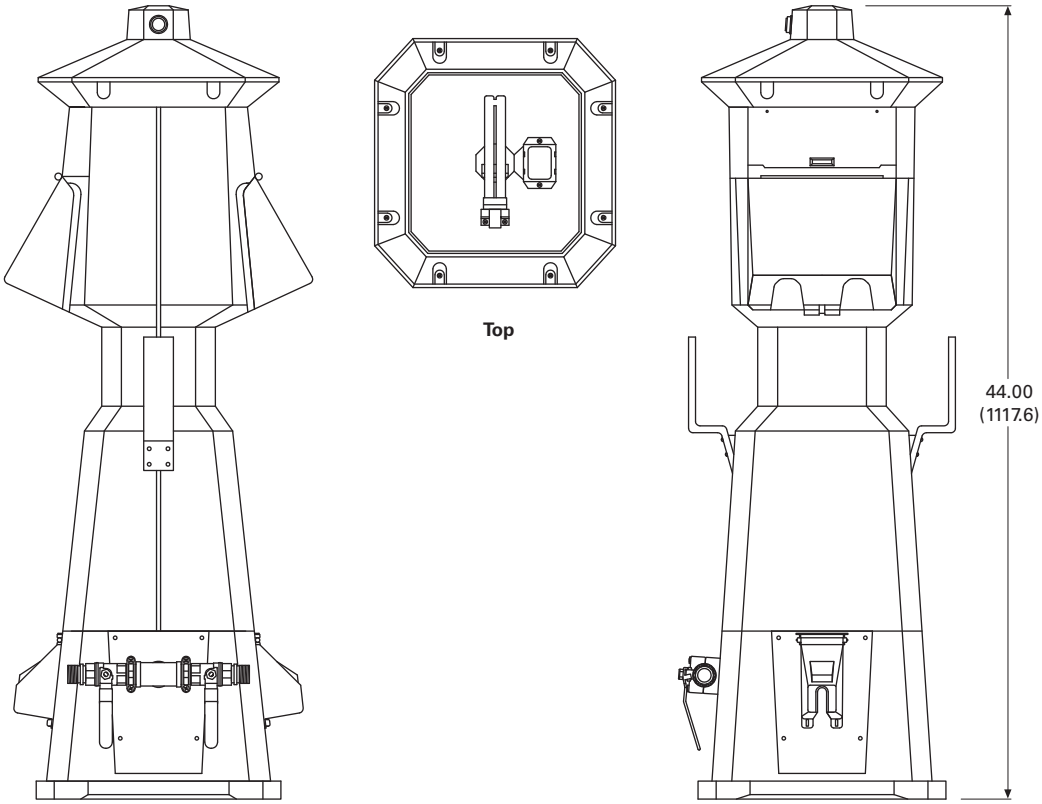

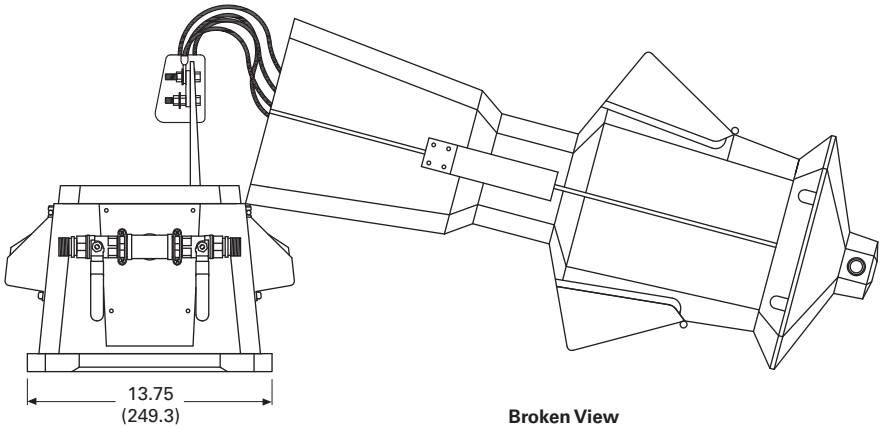

Lighthouse–SS

Contents

Description	*Page*
Power Pedestals	**V1-T5-51**
Lighthouse	**V1-T5-54**
Lighthouse–SS	
Available Options	**V1-T5-59**
Catalog Number Selection	**V1-T5-60**
Accessories	**V1-T5-61**
Dimensions	**V1-T5-61**
Admiral–SS	**V1-T5-62**
Newport Harbor Mate	**V1-T5-65**
Hatteras Light	**V1-T5-69**
Firehouse	**V1-T5-73**
Smart Start	**V1-T5-79**
Mariner	**V1-T5-80**
Digital Electronic Kilowatthour Meters	**V1-T5-81**
Distribution Equipment—Ground Fault Monitor	**V1-T5-82**
Distribution Equipment—Mega Yacht Powerpoint	**V1-T5-83**
Distribution Equipment—Substations	**V1-T5-86**
Distribution Equipment—Panels	**V1-T5-89**
Distribution Equipment—Transformers	**V1-T5-90**

Lighthouse–SS

Product Description

The Lighthouse–SS offers the same standard features and available options as the standard Lighthouse. But, like all of the stainless steel products manufactured here, the Lighthouse–SS is made with high-quality 316L stainless steel for superior quality and performance.

Note: 20/125 A GFI receptacle.

Note: Wireless remote reading of electronic kilowatt meters.

Note: Clear lens.

Note: Meter socket for each side powered (to accept glass style meter).

Note: Receptacle configurations available:
30 A
30 A / 30 A
30 A / 50 A
50 A / 50 A
100 A (single-phase) 120/240 V
100 A (three-phase) 120/208 V
200 A (three-phase) 480 V

Features, Benefits and Functions

- Photocell controlled 13 watt fluorescent light (clear lens or amber lens for bug reduction)
- Available with lockable weatherproof doors
- Hose and cable brackets
- Long-lasting maintenance-free 316L stainless steel housing with limited lifetime warranty
- Copper busbar with ratings from 250 to 500 A
- Large removable access panel for easy maintenance and installation
- Backlit faceplate for easy receptacle plug-in at night

Lighthouse–SS

Available Options

- Digital electronic metering (one, two or three element meters available)
- 20 A / 125 V GFI receptacle (max. of two GFI receptacles per pedestal)

Note: 20 A GFI receptacles are not to be used for shore power.

- High-speed Internet connection
- Wireless remote metering available for water and electricity
- Transient voltage surge suppressor (TVSS) to protect from voltage surges, spikes or lightning on the AC power line (extends warranty on internal parts to three years)
- Single or dual phone and/or cable TV connections
- Single or dual 3/4-inch hose bibs with stainless steel
- Handles LED lighting

Phone and Cable TV Connections

New Door

Copper Busbar with Ratings from 250 to 500 A

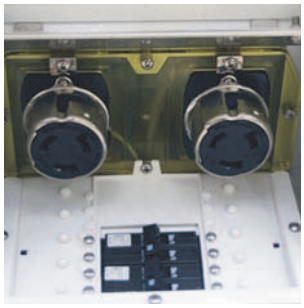

Backlit Faceplate to Aid in Hooking Up at Night

Catalog Number Selection

L D U 4 7 0 0 0 0 0 0 1 2 K M

Type

L	= Lighthouse
S	= LHSS

Lighting and Lens Color

A	= 7 W light	Amber
B	= Dual 7 W light	Amber
C	= 9 W light	Amber
D	= 13 W light	Amber
E	= Dual 13 W light	Amber
F	= No lighting	Amber
G	= 7 W light	Clear
H	= Dual 7 W light	Clear
I	= 9 W light	Clear
J	= 13 W light	Clear
K	= Dual 13 W light	Clear
L	= No lighting	Clear
M	= 7 W light	Special
N	= Dual 7 W light	Special
O	= 9 W light	Special
P	= 13 W light	Special
Q	= Dual 13 W light	Special
R	= No lighting	Special
S	= 350 MA LED	Amber
T	= 700 MA LED	Amber
U	= 350 MA LED	Clear
V	= 700 MA LED	Clear
W	= 350 MA LED	Special
Y	= 700 MA LED	Special

Metering Type

U	= Unmetered
D	= Digital electronic meters (side one)
T	= Digital electronic meters (side two)
B	= Digital electronic meters (both sides)
R	= Receptacles metered individually
M	= One meter socket (100 A)
N	= Two meter socket (100 A each)
V	= 200 A meter socket

Sides and Receptacles

R1S1	R2S1	R3S1	R4S1	R1S2	R2S2	R3S2	R4S2
0	0	0	0	0	0	0	0
1	1	1	1	1	1	1	1
2	2	2	2	2	2	2	2
3	3	3	3	3	3	3	3
4	4	4	4	4	4	4	4
5	5	5	5	5	5	5	5
6	6	6	6	6	6	6	6
7	7	7	7	7	7	7	7
8	8	8	8	8	8	8	8

0	= None
1	= 20 A GFI duplex
2	= 30 A, 125 V
3	= 50 A, 125 V
4	= 50 A, 125/250 V
5	= 100 A, 208 V
6	= 100 A, 250 V
7	= 100 A, 277/480 V
8	= 100 A, 480 V

Water Option ①

0	= 0
1	= 1
2	= 2
3	= Single water meter
4	= Dual water meter
5	= Single meter, 2 V
6	= 1 frost free
7	= 2 frost free

Extra Unmetered GFI Receptacles ②

0	= None
1	= 1
2	= 2

Phone Cable TV and Internet Options

	Phone Jack	Cable TV Jack	Internet Option
A	= 1	0	0
B	= 1	0	1
C	= 1	0	2
D	= 1	1	0
E	= 1	1	1
F	= 1	1	2
G	= 1	2	0
H	= 1	2	1
I	= 1	2	2
J	= 2	0	0
K	= 2	0	1
L	= 2	0	2
M	= 2	1	0
N	= 2	1	1
O	= 2	1	2
P	= 2	2	0
Q	= 2	2	1
R	= 2	2	2
S	= 0	2	2
T	= 0	0	1
U	= 0	0	2
V	= 0	1	0
W	= 0	1	1
X	= 0	1	2
Y	= 0	2	0
Z	= 0	2	1
0	= 0	0	0

Bus

S	= Single-phase 3/8-inch copper busbar
F	= Three-phase 3/8-inch copper busbar
C	= Single-phase 3/8-inch Canadian busbar
T	= Three-phase 3/8-inch Canadian busbar
M	= Single-phase 300 kcmil mechanical lug bus
Z	= Three-phase 300 kcmil mechanical lug bus
L	= Single-phase 350 kcmil mechanical lug bus
P	= Three-phase 350 kcmil mechanical lug bus
N	= Single-phase 1/4-inch copper busbar
Q	= Single-phase 1/4-inch split mechanical busbar

Receptacle: R1S1 = Receptacle 1, Side 1
R2S1 = Receptacle 2, Side 1
R1S2 = Receptacle 1, Side 2
R2S2 = Receptacle 2, Side 2

Notes

① Number represents the quantity of 1/4-turn ball valves with 3/4-inch hose bibs.

② Quantity of 20 A GFI duplex receptacles.

Accessories

See **Page V1-T5-75**.

Dimensions

Approximate Dimensions in Inches (mm)

Lighthouse–SS

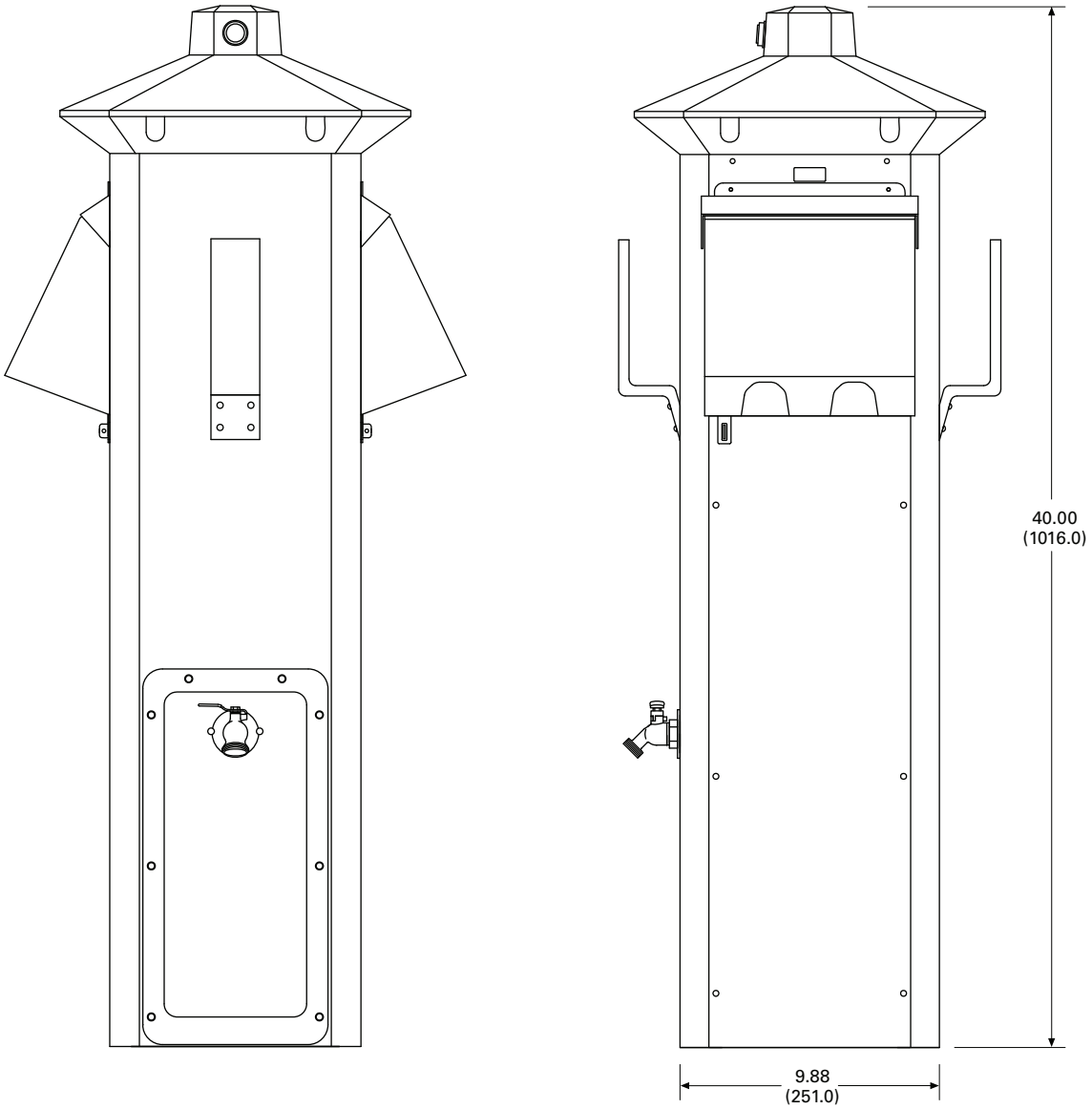

Admiral–SS

Contents

Description	Page
Power Pedestals	V1-T5-51
Lighthouse	V1-T5-54
Lighthouse–SS	V1-T5-58
Admiral–SS	
Catalog Number Selection	V1-T5-63
Accessories	V1-T5-64
Dimensions	V1-T5-64
Newport Harbor Mate	V1-T5-65
Hatteras Light	V1-T5-69
Firehouse	V1-T5-73
Smart Start	V1-T5-79
Mariner	V1-T5-80
Digital Electronic Kilowatthour Meters	V1-T5-81
Distribution Equipment—Ground Fault Monitor	V1-T5-82
Distribution Equipment—Mega Yacht Powerpoint	V1-T5-83
Distribution Equipment—Substations	V1-T5-86
Distribution Equipment—Panels	V1-T5-89
Distribution Equipment—Transformers	V1-T5-90

Admiral–SS

Product Description

Truly the flagship of our unitized pedestal line, the Admiral–SS possesses amperage capabilities up to 500 A and voltages of 480/277 three-phase, 120/240 single-phase and combinations of these receptacles all in one unit to serve nearly any size Mega Yacht.

Features

- Heavy 316L stainless steel housing that is powder coated with a polyester resin
- Photocell controlled 13 watt fluorescent light with clear lens that provides 360 degrees of lighting

Available Options

- Dual phone and/or cable TV connections
- Four 100 A receptacles of any two voltage combinations such as 277/480 three-phase, 120/208 three-phase or 120/240 single-phase
- 200 A / 480 V receptacles
- when the 100 A 120/240 V receptacles are used, two 50 A 120/240 V receptacles can also be provided for a total of 500 A
- 20 A / 125 V GFI receptacle (max. of two GFI receptacles per pedestal)

Note: 20 A GFI receptacles are not to be used for shore power.

- Single or dual Cat5 high-speed Internet connections
- Single or dual water 1/4-turn ball valves with 3/4-inch hose bibs and stainless steel handles
- Digital metering available
- Wireless remote metering available for water and electricity
- LED lighting

Catalog Number Selection

A D U 4 7 0 0 0 0 0 0 1 2 K M

Type

A	= Admiral–SS

Lighting and Lens Color

A	= 7 W light	Amber
B	= Dual 7 W light	Amber
C	= 9 W light	Amber
D	= 13 W light	Amber
E	= Dual 13 W light	Amber
F	= No lighting	Amber
G	= 7 W light	Clear
H	= Dual 7 W light	Clear
I	= 9 W light	Clear
J	= 13 W light	Clear
K	= Dual 13 W light	Clear
L	= No lighting	Clear
M	= 7 W light	Special
N	= Dual 7 W light	Special
O	= 9 W light	Special
P	= 13 W light	Special
Q	= Dual 13 W light	Special
R	= No lighting	Special
S	= 350 MA LED	Amber
T	= 700 MA LED	Amber
U	= 350 MA LED	Clear
V	= 700 MA LED	Clear
W	= 350 MA LED	Special
Y	= 700 MA LED	Special

Metering Type

U	= Unmetered
D	= Digital electronic meters (side one)
T	= Digital electronic meters (side two)
B	= Digital electronic meters (both sides)
M	= One meter socket (100 A)
N	= Two meter socket (100 A each)
V	= 200 A meter socket

Sides and Receptacles

R1S1	R2S1	R3S1	R4S1	R1S2	R2S2	R3S2	R4S2
0	0	0	0	0	0	0	0
1	1	1	1	1	1	1	1
2	2	2	2	2	2	2	2
3	3	3	3	3	3	3	3
4	4	4	4	4	4	4	4
5	5	5	5	5	5	5	5
6	6	6	6	6	6	6	6
7	7	7	7	7	7	7	7
8	8	8	8	8	8	8	8

0	= None
1	= 20 A GFI duplex
2	= 30 A, 125 V
3	= 50 A, 125 V
4	= 50 A, 125/250 V
5	= 100 A, 208 V
6	= 100 A, 250 V
7	= 100 A, 277/480 V
8	= 100 A, 480 V

Water Option ①

0	= 0
1	= 1
2	= 2
3	= Single water meter
4	= Dual water meter
5	= Single meter, 2 V

Extra Unmetered GFI Receptacles

0	= None
1	= 1
2	= 2

Phone Cable TV and Internet Options

Phone Jack	Cable TV Jack	Internet Option ②
A = 1	0	0
B = 1	0	1
C = 1	0	2
D = 1	1	0
E = 1	1	1
F = 1	1	2
G = 1	2	0
H = 1	2	1
I = 1	2	2
J = 2	0	0
K = 2	0	1
L = 2	0	2
M = 2	1	0
N = 2	1	1
O = 2	1	2
P = 2	2	0
Q = 2	2	1
R = 2	2	2
S = 0	2	2
T = 0	0	1
U = 0	0	2
V = 0	1	0
W = 0	1	1
X = 0	1	2
Y = 0	2	0
Z = 0	2	1
0 = 0	0	0

Bus

S	= Single-phase 3/8-inch copper busbar
F	= Three-phase 3/8-inch copper busbar
C	= Single-phase 3/8-inch Canadian busbar
T	= Three-phase 3/8-inch Canadian busbar
M	= Single-phase 300 kcmil mechanical lug bus
Z	= Three-phase 300 kcmil mechanical lug bus
L	= Single-phase 350 kcmil mechanical lug bus
P	= Three-phase 350 kcmil mechanical lug bus
N	= Single-phase 1/4-inch copper busbar
Q	= Single-phase 1/4-inch split mechanical busbar
D	= Dual-phase busbar

Receptacles: R1S1 = Receptacle 1, Side 1
R2S1 = Receptacle 2, Side 1
R3S1 = Receptacle 3, Side 1
R4S1 = Receptacle 3, Side 1
R1S2 = Receptacle 1, Side 2
R2S2 = Receptacle 2, Side 2
R3S2 = Receptacle 3, Side 2
R4S2 = Receptacle 3, Side 2

Notes

① Number represents the quantity of 1/4-turn ball valves with 3/4-inch hose bibs.

② Number represents the quantity of RJ-45 high-speed Internet jacks.

Internet option also available. Contact factory for details.

Accessories

See **Page V1-T5-75**.

Dimensions

Approximate Dimensions in Inches (mm)

Admiral–SS

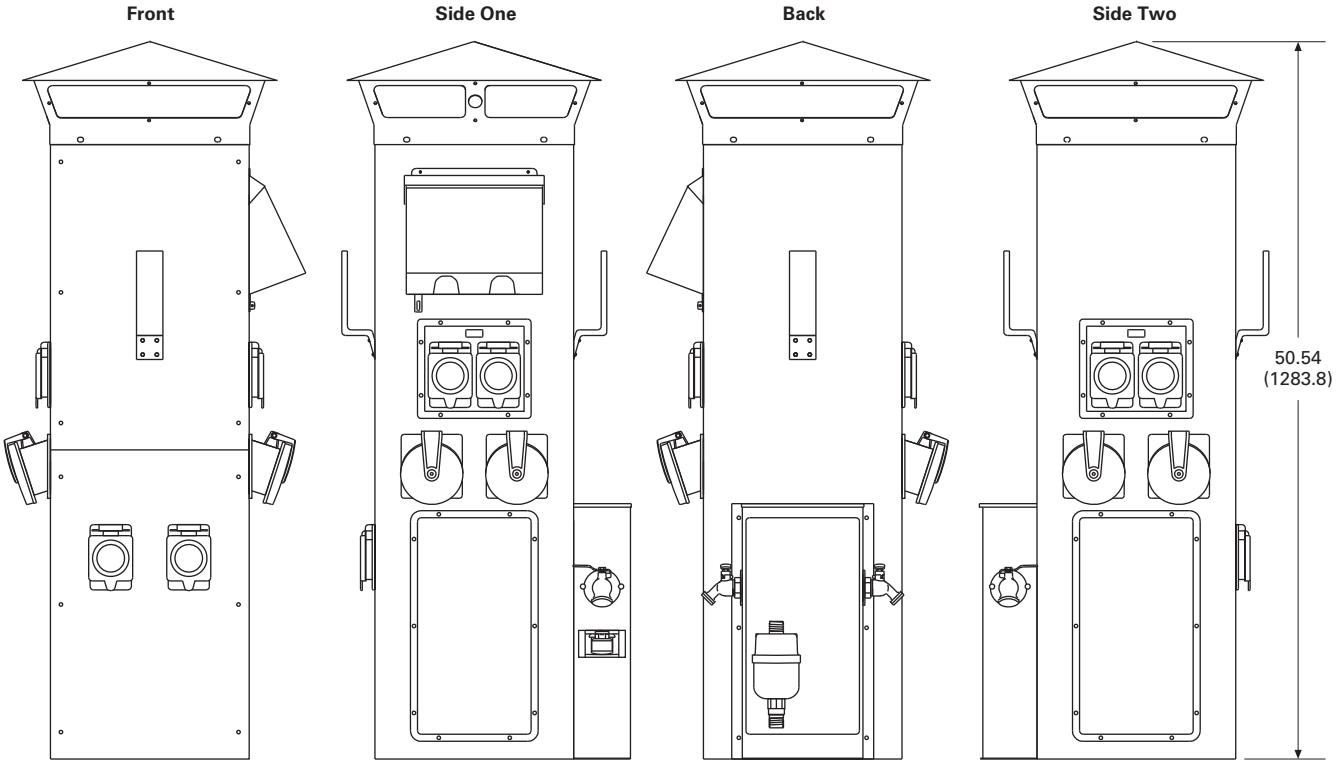

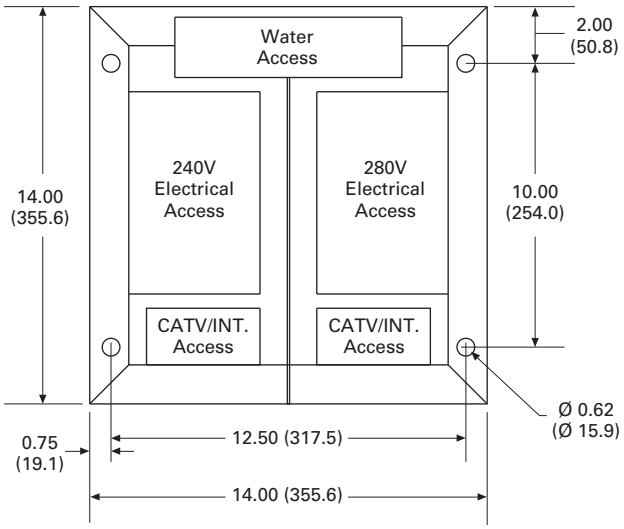

Base Footprint

Newport Harbor Mate

Contents

Description	*Page*
Power Pedestals	**V1-T5-51**
Lighthouse	**V1-T5-54**
Lighthouse–SS	**V1-T5-58**
Admiral–SS	**V1-T5-62**
Newport Harbor Mate	
Available Options	**V1-T5-66**
Catalog Number Selection	**V1-T5-67**
Accessories	**V1-T5-68**
Dimensions	**V1-T5-68**
Hatteras Light	**V1-T5-69**
Firehouse	**V1-T5-73**
Smart Start	**V1-T5-79**
Mariner	**V1-T5-80**
Digital Electronic Kilowatthour Meters	**V1-T5-81**
Distribution Equipment—Ground Fault Monitor	**V1-T5-82**
Distribution Equipment—Mega Yacht Powerpoint	**V1-T5-83**
Distribution Equipment—Substations	**V1-T5-86**
Distribution Equipment—Panels	**V1-T5-89**
Distribution Equipment—Transformers	**V1-T5-90**

Newport Harbor Mate

Product Description

Five years of development and 30 prototype models have yielded this unit the most innovative mini-power center available. Host to a variety of electrical services, contained in a compact yet strong housing, the Newport Harbor Mate is packed with features.

Features, Benefits and Functions

- Tough and durable resin housing with UV inhibitor for lasting finish
- Photocell controlled 7 and 9 watt fluorescent light (clear lens or amber lens for bug reduction)
- Designed to mount on a dock box, piling or stainless steel stand
- Copper busbar with a maximum rating of 140 A

Newport Harbor Mate (Shown with Optional Stand)

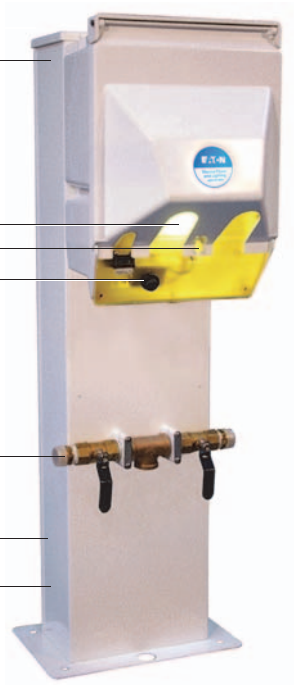

Available Options

- Available with single, dual or combination of 30 A or 50 A receptacles
- 20 A / 125 V GFI receptacle (max. of two GFI receptacles per pedestal)

Note: 20 A GFI receptacles are not to be used for shore power.

- Single or dual phone, cable TV, high-speed Internet connections
- Electronic metering (one or two element meters available)
- 316L stainless steel stand
- LED lighting

Mounting Option

Backlit Faceplate

Catalog Number Selection

N A Y B U 4 3 0 1 1 2 W M

Type
- **N** = NP Harbor Mate
- **C** = NP Camp Mate

Photocell
- **Y** = Yes
- **N** = No

Lighting and Lens Color

A = 7 W light	Amber
C = 9 W light	Amber
F = No lighting	Amber
G = 7 W light	Clear
I = 9 W light	Clear
L = No lighting	Clear
M = 7 W light	Special
O = 9 W light	Special
R = No lighting	Special
S = 350 MA LED	Amber
T = 700 MA LED	Amber
U = 350 MA LED	Clear
V = 700 MA LED	Clear
W = 350 MA LED	Special
Y = 700 MA LED	Special

Lighting Protection
- **B** = Breaker protected
- **F** = Fuse protected

Metering Type ①
- **U** = Unmetered
- **D** = Digital electronic meters
- **R** = Receptacles metered individually

Sides and Receptacles

R1S1	R2S1	R3S1
0	**0**	**0**
1	**1**	**1**
2	**2**	
3	**3**	
4	**4**	

- **0** = None
- **1** = 20 A GFI duplex
- **2** = 30 A, 125 V
- **3** = 50 A, 125 V
- **4** = 50 A, 125/250 V

Stand
- **0** = 0
- **1** = 1

Water Option ②
- **0** = 0
- **1** = 1
- **2** = 2

Hard Wired Breakers

S1
- **0** = None
- **2** = 20 A, two-pole
- **3** = 30 A

Bus
- **S** = Single-phase 1/4-inch copper busbar
- **F** = Three-phase 1/4-inch copper busbar
- **C** = Single-phase 1/4-inch Canadian busbar
- **M** = Mechanical lug 2/0
- **Q** = Single-phase 1/4-inch split mechanical busbar (with stand ONLY)
- **A** = 1/4-inch Canadian mechanical

Phone Cable TV and Internet Options

	Phone Jack	Cable TV Jack	Internet Option
A =	1	0	0
B =	1	0	1
C =	1	0	2
D =	1	1	0
E =	1	1	1 (Camp Mate only)
T =	0	0	1
V =	0	1	0
W =	0	1	1
0 =	0	0	0

Receptacles: R1 = Receptacle 1
R2 = Receptacle 2

Notes

① 20 A GFIs not metered.

② Number represents the quantity of 1/4-turn ball valves with 3/4-inch hose bibs (with stand only).

Accessories

See **Page V1-T5-75**.

Dimensions

Approximate Dimensions in Inches (mm)

Newport Harbor Mate

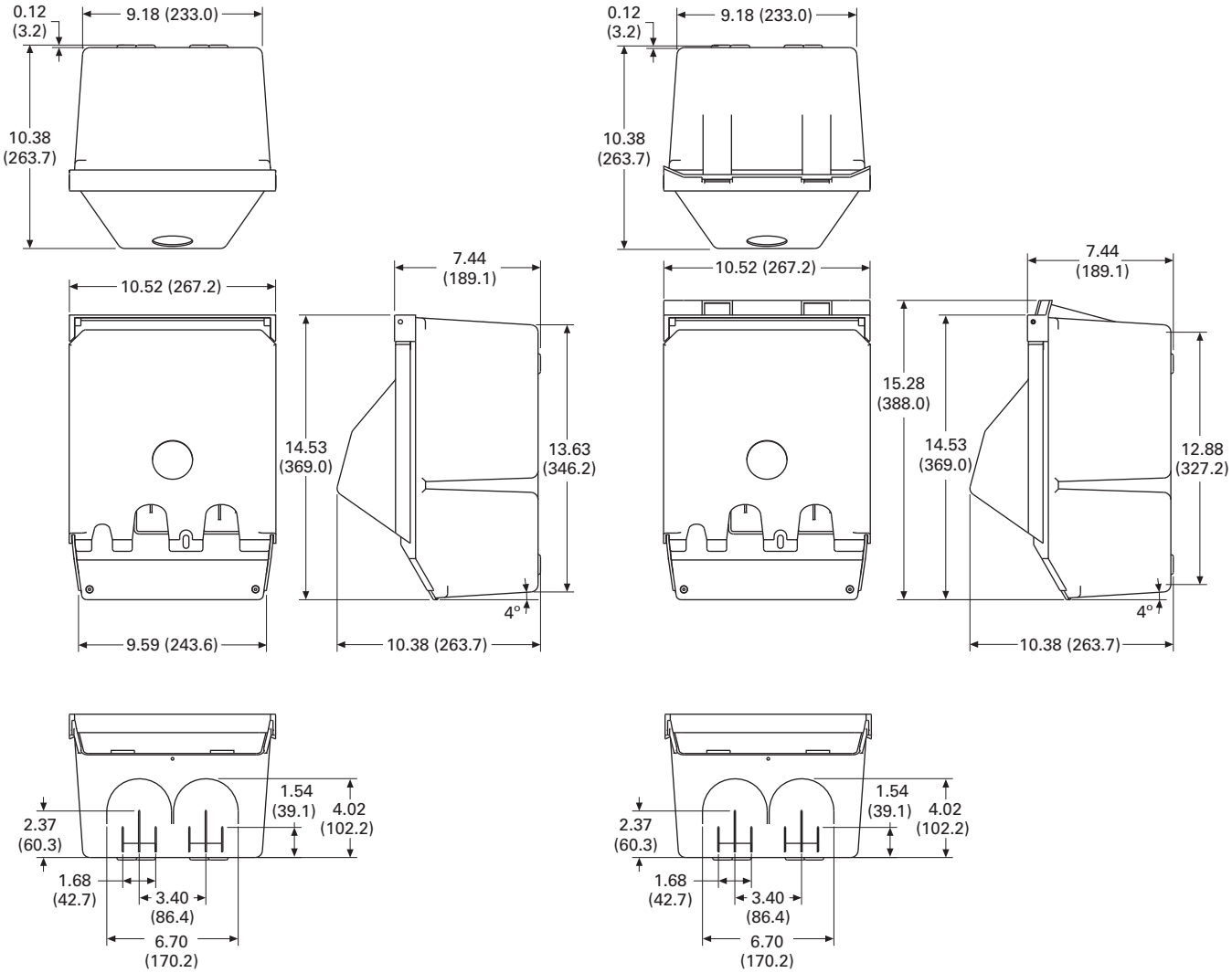

Newport Redesign

Newport Redesign With Meters

Hatteras Light

Contents

Description	*Page*
Power Pedestals	**V1-T5-51**
Lighthouse	**V1-T5-54**
Lighthouse–SS	**V1-T5-58**
Admiral–SS	**V1-T5-62**
Newport Harbor Mate	**V1-T5-65**
Hatteras Light	
Available Options	**V1-T5-70**
Catalog Number Selection	**V1-T5-71**
Accessories	**V1-T5-72**
Dimensions	**V1-T5-72**
Firehouse	**V1-T5-73**
Smart Start	**V1-T5-79**
Mariner	**V1-T5-80**
Digital Electronic Kilowatthour Meters	**V1-T5-81**
Distribution Equipment—Ground Fault Monitor	**V1-T5-82**
Distribution Equipment—Mega Yacht Powerpoint	**V1-T5-83**
Distribution Equipment—Substations	**V1-T5-86**
Distribution Equipment—Panels	**V1-T5-89**
Distribution Equipment—Transformers	**V1-T5-90**

Hatteras Light

Product Description

The Hatteras® Light is an elegant and low cost alternative to the Lighthouse. It uses the same 360 degree light assembly as the Lighthouse, yet is only 30 inches tall. Thousands of these attractive pedestals are found not only in marinas, but also around pools, deck areas, boardwalks and landscape areas. The housing will never rust or corrode and comes with a limited lifetime warranty. This unit is popular for smaller slips at marinas with the Lighthouse and for private docks.

Note: Wireless remote reading of electronic kilowatt meters.

Note: Clear lens.

Note: Custom paint color.

Features, Benefits and Functions

- Photocell controlled 13 watt fluorescent light (clear lens or amber lens for bug reduction)
- Circuit breakers
- Heavy resin housing with a two-part polyurethane coating for a UV resistant, long-lasting finish
- Copper busbar with a maximum rating of 140 A

Hatteras Light

Available Options

- 20 A / 125 V GFI receptacle (max. of two GFI receptacles per pedestal)

Note: 20 A GFI receptacles are not to be used for shore power.

- Digital electronic metering (one or two element meter available)
- Single or dual phone, cable TV, high-speed Internet connections
- Single or dual 1/2-inch or 3/4-inch silcock with stainless steel handles
- LED lighting

Copper Busbar with Ratings up to 140 A

20 A / 125 A GFI Receptacle

Faceplate

Catalog Number Selection

H D Y B D 4 7 0 1 2 A M

Type

H	= Hatteras Light
R	= Park Light

Photocell

Y	= Yes
N	= No

Lighting Protection

B	= Breaker protected
F	= Fuse protected

Metering Type ①

U	= Unmetered
D	= Digital electronic meters
R	= Receptacles metered individually

Lighting and Lens Color

A	= 7 W light	Amber
B	= Dual 7 W light	Amber
C	= 9 W light	Amber
D	= 13 W light	Amber
E	= Dual 13 W light	Amber
F	= No lighting	Amber
G	= 7 W light	Clear
H	= Dual 7 W light	Clear
I	= 9 W light	Clear
J	= 13 W light	Clear
K	= Dual 13 W light	Clear
L	= No lighting	Clear
M	= 7 W light	Special
N	= Dual 7 W light	Special
O	= 9 W light	Special
P	= 13 W light	Special
Q	= Dual 13 W light	Special
R	= No lighting	Special
S	= 350 MA LED	Amber
T	= 700 MA LED	Amber
U	= 350 MA LED	Clear
V	= 700 MA LED	Clear
W	= 350 MA LED	Special
Y	= 700 MA LED	Special

Sides and Receptacles

R1S1	R2S1	R1S2
0	**0**	**0**
1	**1**	**1**
2	**2**	**2**
3	**3**	**3**
4	**4**	**4**

0	= None
1	= 20 A GFI duplex
2	= 30 A, 125 V
3	= 50 A, 125 V
4	= 50 A, 125/250 V

Water Option ②

0	= 0
1	= 1 (1/2-inch)
2	= 2 (1/2-inch)
3	= 1 (3/4-inch)
4	= 2 (3/4-inch)

Hard Wired Breakers

S1	
0	= None
2	= 20 A, two-pole
3	= 30 A

Bus

S	= Single-phase 1/4-inch copper busbar
F	= Three-phase 1/4-inch copper busbar
C	= Single-phase 1/4-inch Canadian busbar
M	= Mechanical lug 2/0 ③
A	= 1/4-inch Canadian mechanical

Phone Cable TV and Internet Options

	Phone Jack	Cable TV Jack	Internet Option
A =	1	0	0
B =	1	0	1
C =	1	0	2
D =	1	1	0
E =	1	1	1
F =	1	1	2
G =	1	2	0
H =	1	2	1
I =	1	2	2
J =	2	0	0
M =	2	1	0
P =	2	2	0
S =	0	2	2
T =	0	0	1
U =	0	0	2
V =	0	1	0
W =	0	1	1
X =	0	1	2
Y =	0	2	0
Z =	0	2	1

Receptacles: R1 = Receptacle 1
R2 = Receptacle 2

Notes

① 20 A GFIs not metered.
② Number represents the quantity of 1/4-turn ball valves with 3/4-inch hose bibs.
③ Wire size #2/0 kcmil or less.

Accessories

See **Page V1-T5-75**.

Dimensions

Approximate Dimensions in Inches (mm)

Hatteras

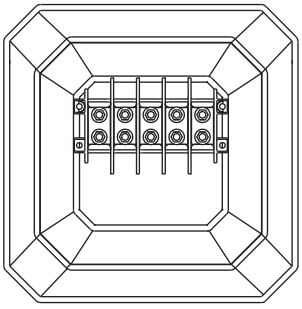

Busbar Access Top Removed

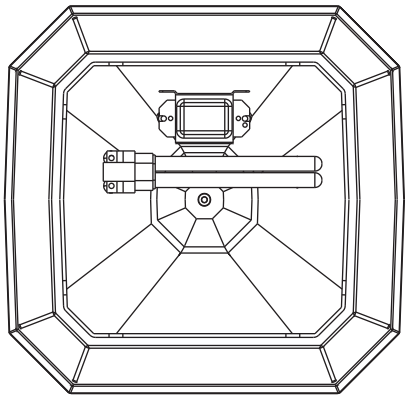

Inside Top

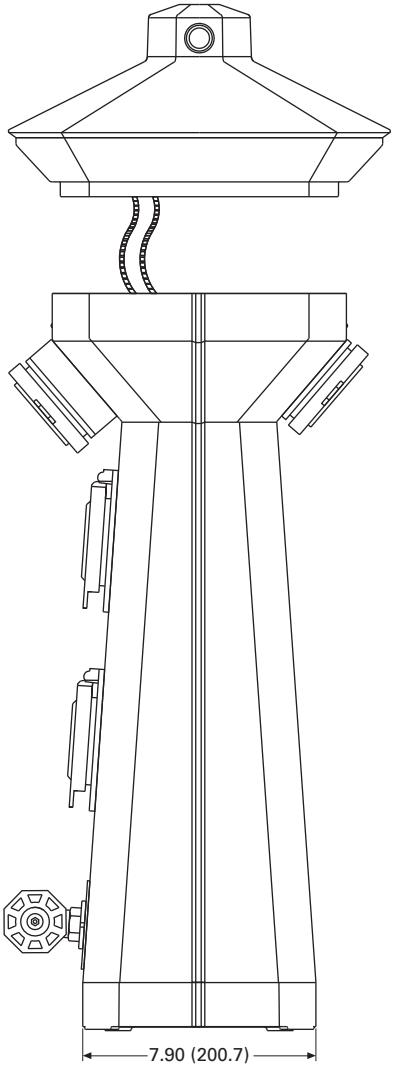

Side View

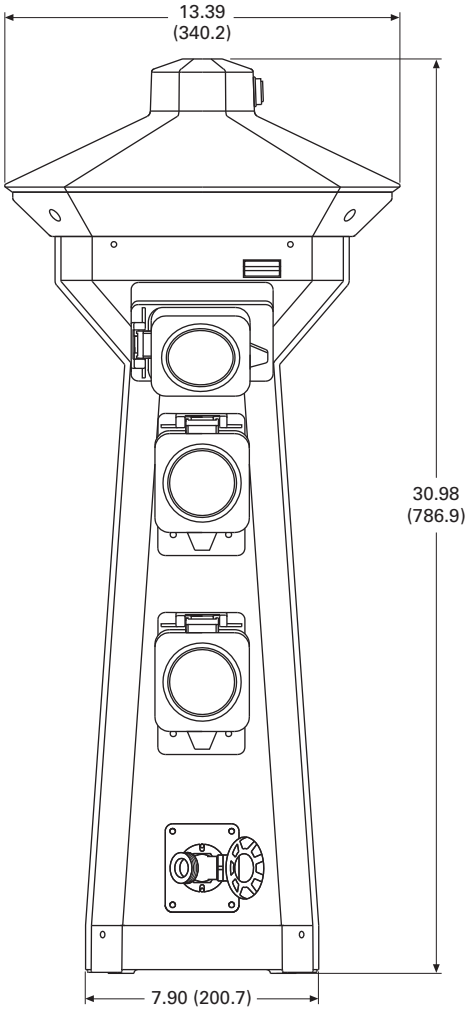

Front View

Firehouse

Contents

Description	*Page*
Power Pedestals	V1-T5-51
Lighthouse	V1-T5-54
Lighthouse–SS	V1-T5-58
Admiral–SS	V1-T5-62
Newport Harbor Mate	V1-T5-65
Hatteras Light	V1-T5-69
Firehouse	
Available Options	V1-T5-74
Catalog Number Selection	V1-T5-74
Accessories	V1-T5-75
Dimensions	V1-T5-78
Smart Start	V1-T5-79
Mariner	V1-T5-80
Digital Electronic Kilowatthour Meters	V1-T5-81
Distribution Equipment—Ground Fault Monitor	V1-T5-82
Distribution Equipment—Mega Yacht Powerpoint	V1-T5-83
Distribution Equipment—Substations	V1-T5-86
Distribution Equipment—Panels	V1-T5-89
Distribution Equipment—Transformers	V1-T5-90

Firehouse

Product Description

Created as a complete solution for fire and rescue needs, this pedestal features fire extinguisher storage and a mounted alarm strobe light and siren, as well as an optional life ring. This unit is well equipped for any marina emergency. The alarm strobe light and siren can be automatically activated when the door is open or optional life ring is removed.

Features, Benefits and Functions

- Alarm strobe light and siren: automatically activated when door is open or optional life ring is removed
- Photocell controlled 13 watt fluorescent light (clear lens or amber lens for bug reduction)
- 10 lb ABC Type fire extinguisher
- 316L stainless steel polyester powder-coated housing
- Polycarbonate top assembly

Firehouse

Available Options

- 24-inch life ring
- 20 lb ABC Type fire extinguisher available

Catalog Number Selection

F A Y A E N

Type
F = Firehouse

Photocell
Y = Yes
N = No

Alarm/Strobe
A = Include alarm/strobe
N = No alarm/strobe

Fire Extinguisher
E = Include 10 lb extinguisher
N = No extinguisher
X = Include 20 lb extinguisher

24-Inch Life Ring
R = Include life ring
N = No life ring

Lighting and Lens Color

A = 7 W light	Amber	**I** = 9 W light	Clear	**Q** = Dual 13 W light	Special
B = Dual 7 W light	Amber	**J** = 13 W light	Clear	**R** = No lighting	Special
C = 9 W light	Amber	**K** = Dual 13 W light	Clear	**S** = 350 MA LED	Amber
D = 13 W light	Amber	**L** = No lighting	Clear	**T** = 700 MA LED	Amber
E = Dual 13 W light	Amber	**M** = 7 W light	Special	**U** = 350 MA LED	Clear
F = No lighting	Amber	**N** = Dual 7 W light	Special	**V** = 700 MA LED	Clear
G = 7 W light	Clear	**O** = 9 W light	Special	**W** = 350 MA LED	Special
H = Dual 7 W light	Clear	**P** = 13 W light	Special	**Y** = 700 MA LED	Special

Accessories

Accessories for Custom Design Marina Products, Resin and Stainless Steel Pedestals and Power Products

Replacement Parts Catalog Numbers

Description	Catalog Number
Receptacles	
20 A GFCI duplex	**MPL3038**
30 A 125 V twistlock	**MPL3039**
50 A 125 V twistlock	**MPL3040**
50 A 125/250 V twistlock	**MPL3045**
100 A 120/240 V pin and sleeve	**MPL4100R12W**
100 A 120/208 pin and sleeve	**MPL5100R9W**
100 A 480 V four-wire pin and sleeve	**MPL4100R7W**
100 A 480 V five-wire pin and sleeve	**MPL5100R7W**
200 A 277/480 V pin and sleeve (Russellstoll®)	**MPL4200R7W**
30 A 125 V RV	**RV3042**
50 A 125/250 V RV	**RV3043**
Circuit Breakers	
20 A 125 V single-pole	**QCF1020**
20 A 125 V single-pole GFCI	**QCGF1020**
30 A 125 V single-pole	**QCF1030**
30 A 125 V single-pole GFCI	**QCGF1030**
50 A 125 V single-pole	**QCF1050**
20 A 125/250 V two-pole	**QCF2020**
20 A 125/250 V two-pole GFCI	**QCGF2020**
30 A 125/250 V two-pole	**QCF2030**
30 A 125/250 V two-pole GFCI	**QCGF2030**
50 A 125/250 V two-pole	**QCF2050**
50 A 125/250 V two-pole GFCI	**QCGF2050**
60 A 125/250 V two-pole	**QCF2060**
100 A 125/250 V two-pole	**GHC2100D**
100 A 120/208 V three-pole	**GHC3100D**
200 A 277/480 V three-pole	**JT2200FA**
Fluorescent Light Assembly	
13 watt 120 V 60 Hz ballast	**MPL2400**
7 watt 120 V 60 Hz ballast	**MPL2401**
13 watt socket	**MPL3079**
7 watt socket	**MPL3077**
13 watt fluorescent bulb	**MPL3018**
7 watt fluorescent bulb	**MPL3019**
Photocell	**MPL3044**
Photocell nuts	**MPL3034**
Lighthouse in-line fuse	**MPL3026**
Lighthouse in-line fuse holder	**MPL3027**
Lighthouse, Lighthouse–SS, Powerhouse, Powerhouse–SS, Hatteras, Park Light	
Top with complete light and lens assembly	**MPL6003A**
Top with complete light and lens assembly—fused	**MPL6003FA**
Top only	**MPL6003**
Amber lens	**MPL6005**
Clear lens	**MPL6008**

Replacement Parts Catalog Numbers, continued

Description	Catalog Number
Lighthouse, Lighthouse–SS, Powerhouse, Powerhouse–SS, Hatteras, Park Light, continued	
20 A GFCI receptacle external cover set	**MPL1101**
30 A receptacle external cover set	**MPL1102**
50 A receptacle external cover set	**MPL1105**
Single-pole external breaker cover set	**MPL11061**
Two-pole external breaker cover set	**MPL11062**
Three-pole external breaker cover set	**MPL11063**
Lighthouse, Lighthouse–SS, Powerhouse, Powerhouse–SS	
Lighthouse/Powerhouse pedestal main housing	**MPL6006**
Lighthouse–SS/Powerhouse–SS pedestal main housing	**MPL6006S**
Lighthouse/Powerhouse main door	**MPL6007**
Lighthouse–SS/Powerhouse–SS main door	**MPL6007S**
Lighthouse/Powerhouse spring closure	**MPL1099**
Lighthouse Powerhouse top isolation plate	**MPL6012**
Lighthouse/Lighthouse–SS breaker plate	**MPL1141**
Powerhouse/Powerhouse–SS breaker plate	**RV1112**
Lighthouse/Lighthouse–SS/Powerhouse/ Powerhouse–SS Hose and cable brackets	**MPL1087**
Lighthouse/Powerhouse stainless steel hinge	**MPL1088**
Lighthouse/Powerhouse complete pedestal base with busbar assembly	**MPL6004A**
Lighthouse/Powerhouse complete pedestal base with three-phase busbar assembly	**MPL6004FA**
Lighthouse/Powerhouse pedestal base without busbars	**MPL6004**
Lighthouse/Powerhouse aluminum blank access panel	**MPL5500**
Lighthouse/Lighthouse–SS/Powerhouse/ Powerhouse–SS complete busbar assembly	**MPL1140A**
Lighthouse/Lighthouse–SS/Powerhouse/Powerhouse–SS complete three-phase busbar assembly	**MPL1140FA**
Copper busbar with nuts and washers	**MPL3471**
20 A GFCI—00 amber resin faceplate	**MPL1120**
30 A—20 GFCI amber resin faceplate	**MPL1121**
30–50 A amber resin faceplate	**MPL1122**
30–30 A amber resin faceplate	**MPL1127**
30–00 A amber resin faceplate	**MPL1129**
50–50 A amber resin faceplate	**MPL1123**
50 A—20 GFCI amber resin faceplate	**MPL1124**
20 GFCI—20 GFCI amber resin faceplate	**MPL1125**
00–00 amber resin faceplate	**MPL1126**
50 A—00 amber resin faceplate	**MPL1128**
100 A faceplate	**MPL1142**
20 A GFCI—00 amber resin faceplate assembly with breakers	**MPL1120A**
30 A—20 GFCI amber resin faceplate assembly with breakers	**MPL1121A**
30–50 A amber resin faceplate assembly with breakers	**MPL1122A**

Replacement Parts Catalog Numbers, continued

Description	Catalog Number
Lighthouse, Lighthouse–SS, Powerhouse, Powerhouse–SS, continued	
30–30 A amber resin faceplate assembly with breakers	**MPL1127A**
50–50 A amber resin faceplate assembly with breakers	**MPL1123A**
50 A—20 GFCI amber resin faceplate assembly with breakers	**MPL1124A**
20 GFCI—20 GFCI amber resin faceplate assembly with breakers	**MPL1125A**
50 A—00 amber resin faceplate assembly with breakers	**MPL1128A**
30–00 A faceplate assembly with breakers	**MPL1129A**
100 A faceplate assembly with breakers	**MPL1142A**
Powerhouse 30–50 receptacle plate	**RV1143**
Powerhouse (30 A—00) receptacle plate	**RV11433**
Powerhouse (50 A—00) receptacle plate	**RV11435**
Powerhouse breaker plate	**RV1112**
Phone, Cable, Internet Assemblies	
Lighthouse/Powerhouse complete phone and cable assembly	**MPL1114/RV1114**
Lighthouse–SS/Powerhouse–SS/Hatteras Light/Park Light complete phone and cable assembly	**MPL1119/RV1119**
Hatteras Light/Park Light complete phone and cable assembly	**MPL1119**
Newport Harbor Mate/Camp Mate phone and cable insert assembly	**MPL1115/RV1115**
Lighthouse/Powerhouse access plates with dual Internet jacks	**MPL5501**
Coax cable TV FCF female adpt. with lugnut and washer	**MPL1086**
RJ45 CAT5e high-speed internet jack	**MPL3059**
Marine phone receptacle	**MPL3037**
RJ12 CAT3 phone jack	**RV3060**
Water Assemblies	
Lighthouse/Powerhouse complete water manifold assembly (dual 3/4-inch hose bibs with 1/4-turn ball valves)	**MPL11A**
Newport Harbor Mate/Newport Camp Mate water manifold assembly (dual 3/4-inch hose bibs with 1/4-turn ball valves)	**MPL11C**
3/4-inch hose adapter	**MPL7030**
Lighthouse/Powerhouse water mounting plate with mounting brackets	**MPL1132**
Hatteras Light/Park Light aluminum water mounting plate	**MPL6584**
1/2-inch brass silcock (hose bib)	**MPL7014**
3/4-inch stainless steel silcock (hose bib)	**MPL5271**
3/4-inch brass ball valve	**MPL7021**
Watts 3/4-inch backflow preventer	**MPL7015**

Replacement Parts Catalog Numbers, continued

Description	Catalog Number
Digital Electronic Meters	
Single element, 14-pin quick disconnect (no CTs)	**MPL17A1**
Single element, 14-pin quick disconnect (with CTs)	**MPL17A2** ①
Single element, 14-pin quick disconnect (with CTs)	**MPL17A2** ②
Dual element, 14-pin quick disconnect (no CTs)	**MPL17B1**
Dual element, 14-pin quick disconnect (with CTs)	**MPL17B2** ①
Dual element, 14-pin quick disconnect (with CTs)	**MPL17B2** ②
Three element, 14-pin quick disconnect (no CTs)	**MPL17C1**
Three element, 14-pin quick disconnect (with CTs)	**MPL17C2** ①
Three element, 14-pin quick disconnect (with CTs)	**MPL17C2** ②
Single element coil transformers (CTs)	**MPL30321** ①
Single element coil transformers (CTs)	**MPL30321** ②
Dual element coil transformers (CTs)	**MPL30322** ①
Dual element coil transformers (CTs)	**MPL30322** ②
Three element coil transformers (CTs)	**MPL30323** ①
Three element coil transformers (CTs)	**MPL30323** ②
Counter (large—old style)	**MPL3022**
Counter (small—new style)	**MPL3021**
Hatteras Light (Marina) and Park Light (RV) ③	
Pedestal main housing	**MPL6002**
Copper busbar with nuts and washers	**MPL3468**
Complete busbar assembly	**MPL1108A**
Complete three-phase busbar assembly	**MPL1108FA**
20 A GFCI external cover door	**MPL1101**
30 A external cover door	**MPL1102**
50 A external cover door	**MPL1105**
Light fuse	**MPL3026**
Fuse holder	**MPL3027**
Mounting feet (set of four)	**MPL7004**

Notes

① Lighthouse, Lighthouse–SS, Powerhouse, Powerhouse–SS.
② Hatteras Light, Park Light, Newport Camp Mate, Newport Harbor Mate.
③ Please contact factory to determine configurations for replacement housing.

Replacement Parts Catalog Numbers, continued

Description	Catalog Number
Newport Harbor Mate (Marina) and Camp Mate (RV)	
Amber lens—three-piece	**MPL1117**
Clear lens—three-piece	**MPL1109**
Main housing	**MPL6000**
Main door	**MPL6001**
30–30 A faceplate ①	**MPL1135**
30–50 A faceplate ①	**MPL1136**
50–50 A faceplate ①	**MPL1137**
50 A–00 faceplate ①	**MPL1138**
30 A–00 faceplate ①	**MPL1139**
30–30 A faceplate assembly with breakers ①	**MPL1135A**
30–30–20 GFI faceplate assembly ①	**MPL1135G/RV1135G**
30–50 A faceplate assembly with breakers ①	**MPL1136A**
30–50–20 GFI faceplate assembly ①	**MPL1136G/RV1136G**
50–50 A faceplate assembly with breakers ①	**MPL1137A**
50–50–20 GFI faceplate assembly ①	**MPL1137G/RV1137G**
50 A–00 faceplate assembly with breakers ①	**MPL1138A**
50–20 GFI faceplate assembly ①	**MPL1138G/RV1138G**
30 A–00 faceplate assembly with breakers ①	**MPL1139A**
30–20 GFI faceplate assembly ①	**MPL1139G/RV1139G**
Mounting brackets	**MPL7005**
36-inch stainless steel stand	**MPL5506**
Copper busbar with nuts and washers	**MPL3468**
Complete busbar assembly	**MPL1108A**
Complete three-phase busbar assembly	**MPL1108FA**
Firehouse (Marina and RV)	
Red strobe light/siren	**MPL3020**
Firehouse top with lighting assembly and strobe	**MPLFH6003A**
Light fuse	**MPL3029**
Fuse holder	**MPL3028**
Door	**MPL6013**
24-inch life ring	**MPL4201**
Life ring bracket	**MPL4201B**
Blank access panel	**MPL6015**
Door/life ring switch (pre-2004)	**MPL3030**
Door/life ring switch (new)	**MPL3050**
Door hasp	**MPL3950**
Busbar (double barrel terminal block)	**MPL3751**
10-lb ABC Type fire extinguisher	**MPL8025**
20-lb ABC Type fire extinguisher	**MPL8025X**

Note

① For custom faceplates to include phone/cable or other accessories, please contact Eaton's Marina Power & Lighting facility at 1-800-723-8009.

Dimensions

Approximate Dimensions in Inches (mm)

Firehouse–SS

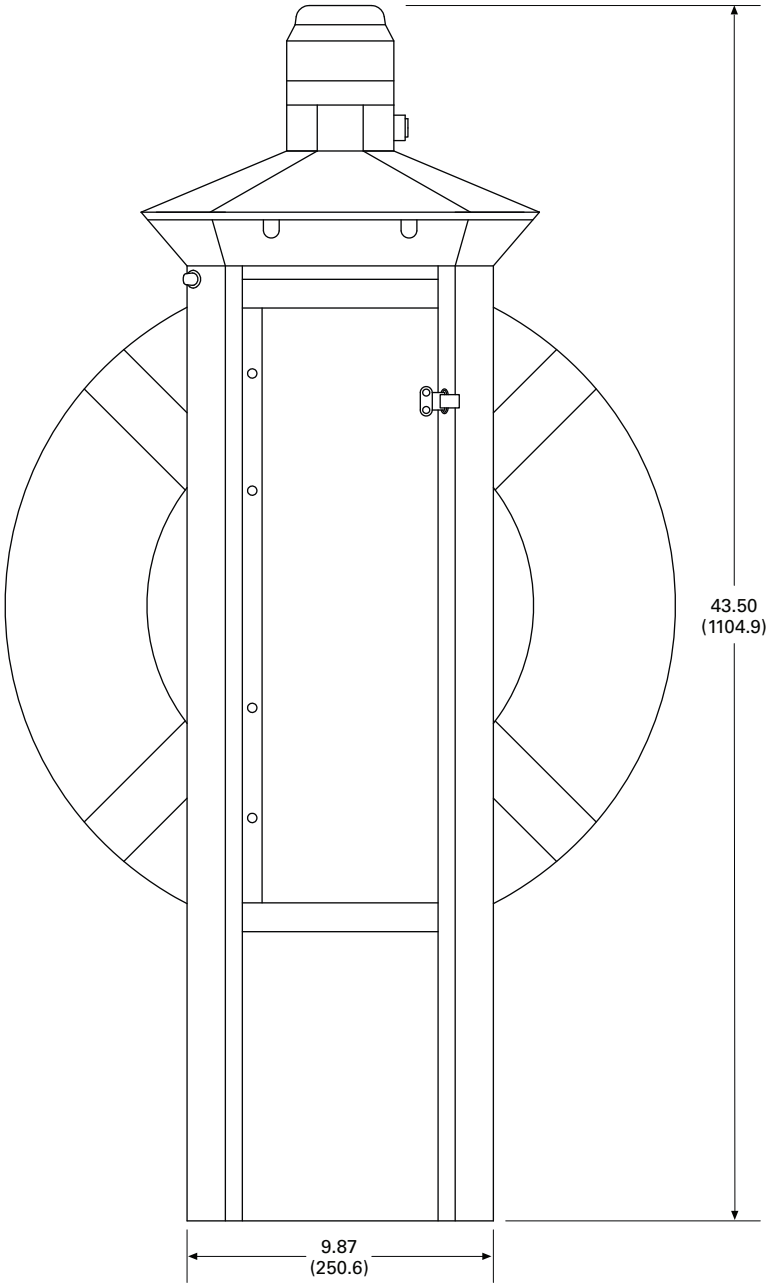

Smart Start

Contents

Description	*Page*
Power Pedestals	**V1-T5-51**
Lighthouse	**V1-T5-54**
Lighthouse–SS	**V1-T5-58**
Admiral–SS	**V1-T5-62**
Newport Harbor Mate	**V1-T5-65**
Hatteras Light	**V1-T5-69**
Firehouse	**V1-T5-73**
Smart Start	
Mariner	**V1-T5-80**
Digital Electronic Kilowatthour Meters	**V1-T5-81**
Distribution Equipment—Ground Fault Monitor	**V1-T5-82**
Distribution Equipment—Mega Yacht Powerpoint	**V1-T5-83**
Distribution Equipment—Substations	**V1-T5-86**
Distribution Equipment—Panels	**V1-T5-89**
Distribution Equipment—Transformers	**V1-T5-90**

Smart Start

Product Description

If you have transient boat slips, Eaton Marina Power and Lighting has developed their newest product for your situation.

The new "Smart Start" pedestal is activated by the swipe of a credit card. A kiosk will be centrally located at the marina and will control up to 32 power pedestals. When a boater wants to use a slip, they will enter the slip number and amount of time they would like and will then be asked to swipe a card in order to activate the pedestal. Once the chosen time is up, the pedestal will shut down. No more free power!

The "Smart Start" pedestal will not only prevent transient boaters from stealing power, but it will also eliminate the need for 24-hour monitoring of the slips. Boaters will be able to come in at any time of the day and activate a pedestal.

Features

- Lighted 316L stainless steel kiosk enclosure
- Programmable slip time blocks
- Programmable slip rates printable receipts

Standards and Certifications

- UL listing pending

Listed

Dimensions

Approximate Dimensions in Inches (mm)

Smart Start

Height	60.05 (1525.3)
Width	14.15 (359.4)
Depth	14.24 (361.9)

Marina Power and Lighting Equipment

Mariner

Contents

Description	*Page*
Power Pedestals	**V1-T5-51**
Lighthouse	**V1-T5-54**
Lighthouse–SS	**V1-T5-58**
Admiral–SS	**V1-T5-62**
Newport Harbor Mate	**V1-T5-65**
Hatteras Light	**V1-T5-69**
Firehouse	**V1-T5-73**
Smart Start	**V1-T5-79**
Mariner	
Digital Electronic Kilowatthour Meters	**V1-T5-81**
Distribution Equipment—Ground Fault Monitor	**V1-T5-82**
Distribution Equipment—Mega Yacht Powerpoint	**V1-T5-83**
Distribution Equipment—Substations	**V1-T5-86**
Distribution Equipment—Panels	**V1-T5-89**
Distribution Equipment—Transformers	**V1-T5-90**

Mariner

Product Description

The Mariner is a lighting bollard that can stand from 1.5 to 4 feet tall and can be used in various applications from marina docks, to landscaped areas, golf courses and beyond. The Mariner will have a lifetime warranty on the engineered resin housing that will withstand the harsh marine and land environments from Alaska to the tropics.

Features

- Can be configured with a 7 watt, 9 watt or 13 watt fluorescent bulb
- Mounting base and painted pole supplied for desired height
- Limited lifetime warranty on engineered resin housing
- Custom colors available
- Side-mounted option

Dimensions

Approximate Dimensions in Inches (mm)

Mariner

7 watt	14.15 (359.4)
9 watt/13 watt	14.24 (361.9)

Mounting Base and Pole

1.5 feet–4 feet

Catalog Number Selection

M 5 A R 18

Type
M = Mariner

Bulb Wattage
5 = 5 W
7 = 7 W
9 = 9 W
3 = 13 W
1 = 50 MA LED

Color Lens
A = Amber
C = Clear
S = Special

Color
W = White
R = Blue
B = Black
D = Dark green
S = Special

Stand Height
18 = 18-inch
24 = 24-inch
36 = 36-inch
48 = 48-inch

Digital Electronic Kilowatt Hour Meters

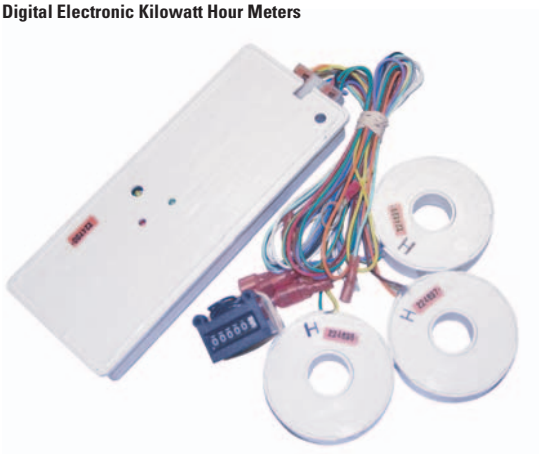

Contents

Description	*Page*
Power Pedestals	**V1-T5-51**
Lighthouse	**V1-T5-54**
Lighthouse–SS	**V1-T5-58**
Admiral–SS	**V1-T5-62**
Newport Harbor Mate	**V1-T5-65**
Hatteras Light	**V1-T5-69**
Firehouse	**V1-T5-73**
Smart Start	**V1-T5-79**
Mariner	**V1-T5-80**
Digital Electronic Kilowatthour Meters	
Distribution Equipment—Ground Fault Monitor	**V1-T5-82**
Distribution Equipment—Mega Yacht Powerpoint	**V1-T5-83**
Distribution Equipment—Substations	**V1-T5-86**
Distribution Equipment—Panels	**V1-T5-89**
Distribution Equipment—Transformers	**V1-T5-90**

Digital Electronic Kilowatthour Meters

Product Description

Using the latest surface mount technology, Eaton manufactures a digital electronic kilowatthour meter that exceeds the +/– 2% accuracy required by ANSI (American National Standards Institute) C-12.1 and is approved by the state of California at +/– 1% over the full range of 0–100 A from a 0.5–1 power factor and is available for both single- and three-phase applications.

The meter drives an electro-mechanical counter that requires a 12 V pulse each tenth of a kilowatthour, providing 10 pulses per kilowatt used. The meter output can be hard wired or connected to a transmitter in the pedestal for wireless transmission to a receiver displaying the output on a PC for direct billing of up to 1,000 individual customers.

Features

Our meter is designed to be user friendly in that all connections from external sources and the meter output are through one 14-pin locking connector. This feature eliminates many common problems, such as reverse line polarity and improper coil polarity. Simple LEDs, both red and green, indicate line and load condition and the pulsed LED indicates the rate of power consumption.

Wireless System

All of our meters are "wireless capable" to allow for wireless meter reading. This technology enables the marina or RV park to get meter readings from one central location rather than visiting every site to read the counters.

Meter Socket Capabilities

Meter sockets are available on the Lighthouse and Lighthouse–SS.

Standard

- Four jaw
- Ring-type
- 100 A

Available Options

- 200 A (SS only)
- Lockable hasp
- Ringless (SS only)
- Five jaw
- Seven jaw (SS only)

Product Selection

One Element Meter

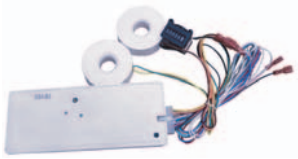

Two Element Meter

Three Element Meter

Ground Fault Monitor

Contents

Description	*Page*
Power Pedestals	**V1-T5-51**
Lighthouse	**V1-T5-54**
Lighthouse–SS	**V1-T5-58**
Admiral–SS	**V1-T5-62**
Newport Harbor Mate	**V1-T5-65**
Hatteras Light	**V1-T5-69**
Firehouse	**V1-T5-73**
Smart Start	**V1-T5-79**
Mariner	**V1-T5-80**
Digital Electronic Kilowatthour Meters	**V1-T5-81**
Distribution Equipment—Ground Fault Monitor	
Distribution Equipment—Mega Yacht Powerpoint	**V1-T5-83**
Distribution Equipment—Substations	**V1-T5-86**
Distribution Equipment—Panels	**V1-T5-89**
Distribution Equipment—Transformers	**V1-T5-90**

Distribution Equipment—Ground Fault Monitor

Product Description

Our ground fault monitoring systems are designed to detect fault currents in the AC shore power system that are too low to trip a circuit breaker. The ground fault monitor helps reduce the risk of injury or property damage that may result from stray fault currents. Our ground fault monitoring system provides information to the maintenance staff on the overall condition of the AC electrical system. The ground fault monitoring system operates 24 hours a day and can be monitored by non-technical personnel.

Features

- Adjustable trip level 10 mA to 10 A
- Current transformers up to 8 1/4-inch diameter
- Visual and/or audible alarm
- Housing of fiberglass or powder-coated stainless steel available

Power Guard

The ground fault monitor detects ground fault currents by means of current transformers (CT), which are placed around main or branch circuits. If a ground fault occurs, the CT will detect the amount of fault current and send a signal to the ground fault monitoring device where the amount of fault current is displayed with the faulty circuit identified. The detected fault can either activate an indicator alarm or disconnect the faulted circuit.

Standards and Certifications

- UL listed current transformers

Listed

Marina Power and Lighting Equipment

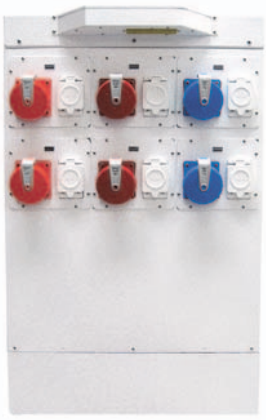

Contents

Description	*Page*
Power Pedestals	**V1-T5-51**
Lighthouse	**V1-T5-54**
Lighthouse–SS	**V1-T5-58**
Admiral–SS	**V1-T5-62**
Newport Harbor Mate	**V1-T5-65**
Hatteras Light	**V1-T5-69**
Firehouse	**V1-T5-73**
Smart Start	**V1-T5-79**
Mariner	**V1-T5-80**
Digital Electronic Kilowatthour Meters	**V1-T5-81**
Distribution Equipment—Ground Fault Monitor	**V1-T5-82**
Distribution Equipment—Mega Yacht Powerpoint	
Wiring Diagram	**V1-T5-84**
Dimensions	**V1-T5-85**
Distribution Equipment—Substations	**V1-T5-86**
Distribution Equipment—Panels	**V1-T5-89**
Distribution Equipment—Transformers	**V1-T5-90**

Distribution Equipment—Mega Yacht Powerpoint

Product Description

From the company that is known for its high-quality innovations, Eaton is the only company to offer a self-contained dual-phase mega yacht unit. Made out of long-lasting stainless steel, this mega yacht unit has a copper-wound, low-noise transformer that is double insulated and epoxy overcoated.The mega yacht unit delivers both single-phase and three-phase power to serve most mega yachts. Helping to keep your marina environment tranquil, the mega yacht unit has a low-noise, highly efficient transformer that has isolation mounts to ensure a very quiet operation.

Features

- Thermostatically controlled fans in transformer compartment for cooling
- Heavy stainless steel (316L) cabinet with a polyester powder coating
- Ventilated sun shields to help unit run cooler in tropical climates
- Limited lifetime warranty on housing
- Two or three light 13 watt photocell controlled fluorescent lights on the sun shield for optimal night lighting

Available Options

- 200 A–480 V three-phase receptacles
- 100% rated breakers
- Hard wiring busbars for all voltages with breaker protection
- Two 3/4 inch water outlets with a water meter
- Two phone, two CATV and two CAT5 high-speed Internet connections
- Digital electronic meters on all receptacles
- Primary breaker
- Two 480 V delta or wye 125 A three-phase receptacles (IEC)
- Two 120/208 V 100 A three-phase receptacles (IEC)
- Two 120/240 V 100 A single-phase receptacles (IEC)
- Up to four 50 A 120/240 V locking receptacles (NEMA)
- Up to four 30 A 120 V locking receptacles (NEMA)
- Wireless remote metering for electric and water
- 20 A GFI receptacle
- Primary side 480 V maximum 600 A
- Secondary side single-phase 120/240 V maximum 100 kVA
- Secondary side three-phase 120/208 V maximum 125 kVA
- Fire extinguisher—10 or 20 lbs

Wiring Diagram

Powerpoint

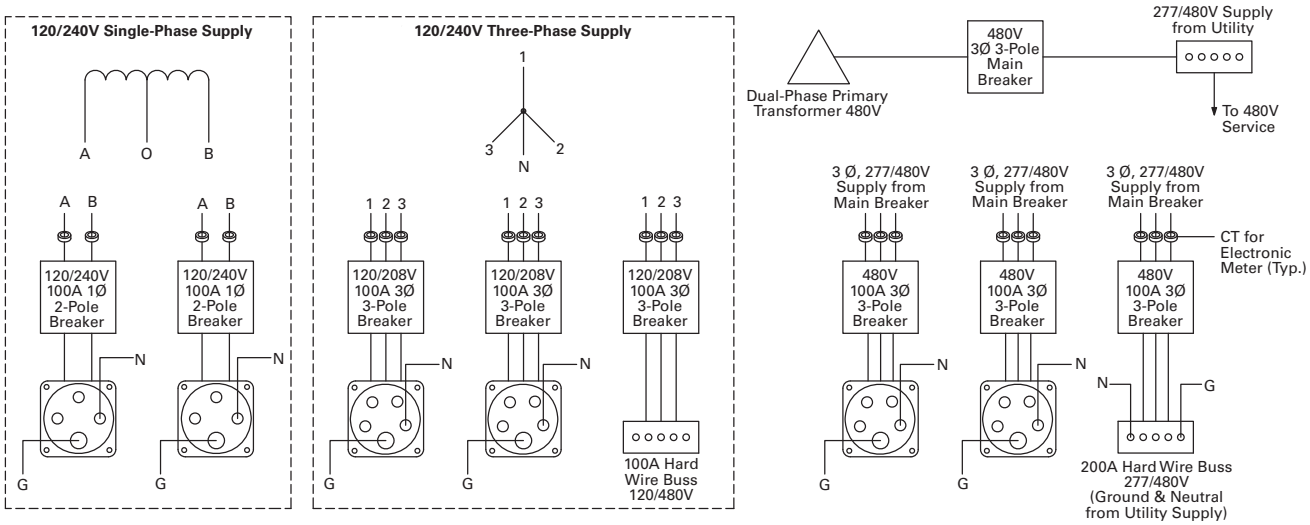

Dimensions

Approximate Dimensions in Inches (mm)

Powerpoint Unit

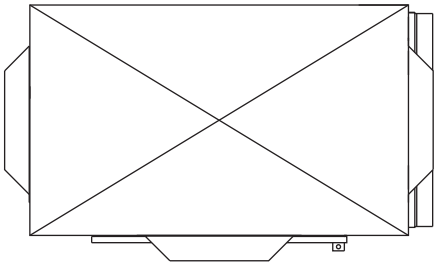

Top With Solar Shield

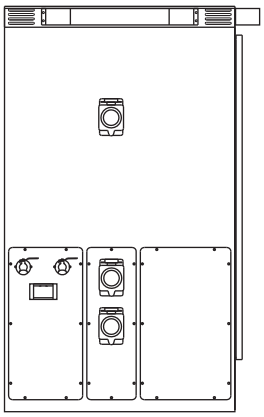

Left Side

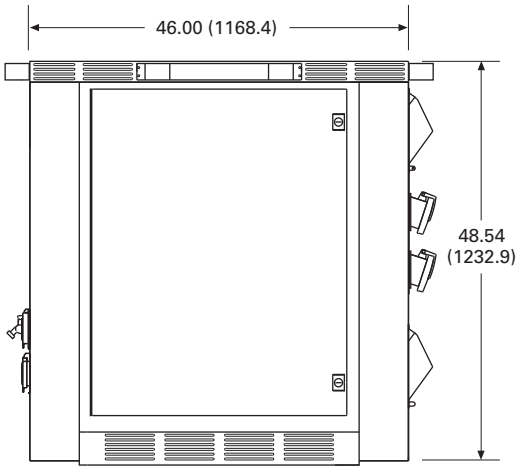

Front

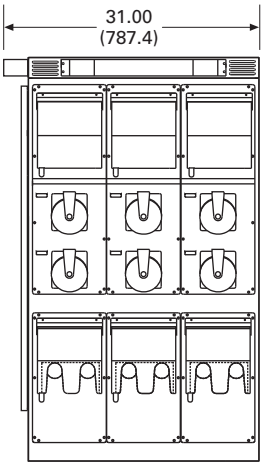

Right Side

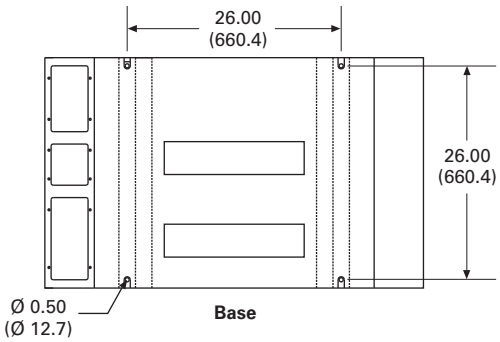

Base

Substations

Double Panel Substation

Contents

Description	*Page*
Power Pedestals	**V1-T5-51**
Lighthouse	**V1-T5-54**
Lighthouse–SS	**V1-T5-58**
Admiral–SS	**V1-T5-62**
Newport Harbor Mate	**V1-T5-65**
Hatteras Light	**V1-T5-69**
Firehouse	**V1-T5-73**
Smart Start	**V1-T5-79**
Mariner	**V1-T5-80**
Digital Electronic Kilowatthour Meters	**V1-T5-81**
Distribution Equipment—Ground Fault Monitor	**V1-T5-82**
Distribution Equipment—Mega Yacht Powerpoint	**V1-T5-83**
Distribution Equipment—Substations	
Features, Benefits and Functions	**V1-T5-87**
Available Options	**V1-T5-88**
Standards and Certifications	**V1-T5-88**
Dimensions	**V1-T5-88**
Distribution Equipment—Panels	**V1-T5-89**
Distribution Equipment—Transformers	**V1-T5-90**

Distribution Equipment—Substations

Product Description

The introduction of substations into the marina and recreational vehicle market allows Eaton to be your complete marina and RV park electrical products supplier. We are able to assist in the design and layout of your marina or RV park electrical system from the primary service provider, to your power pedestal. Our substations are designed for any coastal or inland environment and are constructed of powder-coated stainless steel NEMA 3R housing cabinets. All substation cabinets come with our limited lifetime warranty. All of our substations use Eaton's panels and circuit breakers providing our customers the utmost in circuit protection and quality.

Application Description

The aluminum and Galvaneal cabinets are recommended for inland applications. The substations can be configured with 50–330 kVA single-phase or three-phase copper wound transformers and up to 20 single-phase or 12 three-phase branch breakers. An optional three-sided double-wall cabinet is available that provides air flow between the panels. All substations come standard with temperature controlled cooling fans.

Product Selection Guide

Panel and Transformer Combinations

Panel	Transformer
Single-Phase	
200 A	50 kVA
300 A	75 kVA
400 A	100 kVA
600 A	150 kVA
700 A	167.5 kVA
800 A	200 kVA
1000 A	250 kVA
1200 A	330 kVA
Three-Phase	
100 A	45 kVA
200 A	75 kVA
300 A	112.5 kVA
400 A	150 kVA
600 A	225 kVA
800 A	300 kVA

Features, Benefits and Functions

- Limited lifetime warranty on the housing
- All stainless steel hardware
- Temperature controlled cooling fans in the transformer and circuit breaker compartments
- Lockable door

Ventilation

The substation ventilation is designed to optimize air circulation over and around the transformers and through the panel compartment so that the substation operates at lower temperatures.

Substations come equipped with temperature controlled cooling fans for exhausting hot air from the cabinet and solar shield.

In addition, substations are available with a double-walled cabinet and solar shield, which allow for cooling of both the exterior surface of the cabinet and the internal components.

Substations

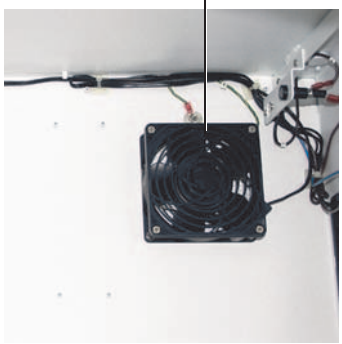

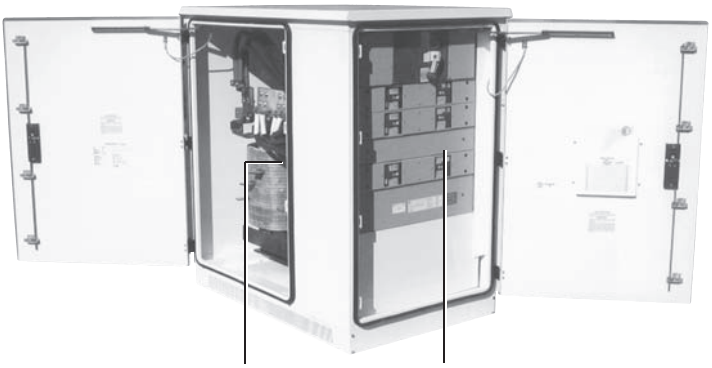

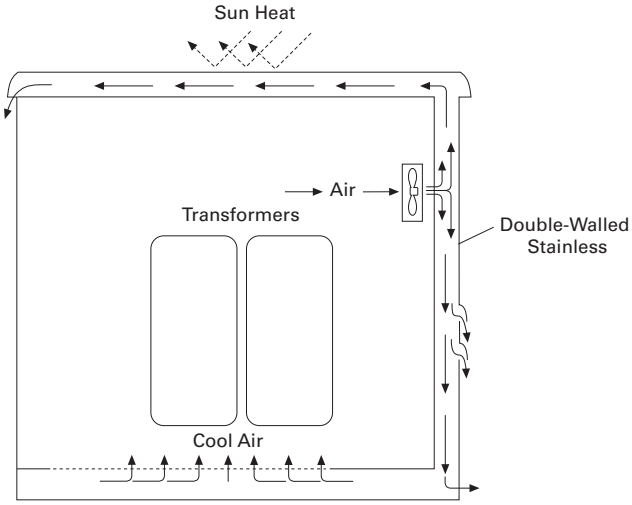

Double-Walled Construction

Available Options

- Powder-coated cabinets made of stainless steel or fiberglass
- Limited lifetime warranty on housing. Transformer and secondary distribution panel in a single enclosure have a one-year limited warranty
- Stainless steel housing and hardware with locking doors
- Single-phase and three-phase models
- Overload capacity meets ANSI L57.96–01.250
- Optional double-walled construction
- Temperature controlled fans for cooling
- Custom-made copper wound single-phase or three-phase transformers from 50–330 kVA
- Up to 1200 A main circuit breaker with 15 single-phase branch circuit breakers or 10 three-phase branch circuit breakers
- Substations can be equipped with photocells to turn on and off lights
- A 20 A GFI can be installed in the cabinet, as well as a ground fault monitoring system

Standards and Certifications

- cULus listed

C UL US
Listed

Dimensions

Approximate Dimensions in Inches (mm)

Substations

Standard Substation	
Height	53.00 (1346.2)
Width	51.00 (1295.4)
Depth	33.00 (838.2)
Side-by-Side Substation	
Height	53.00 (1346.2)
Width	66.00 (1676.4)
Depth	30.00 (762.0)
Double Panel Substation	
Height	53.00 (1346.2)
Width	63.00 (1600.2)
Depth	33.00 (838.2)

Panels

Panel (Stainless Steel Shown)

Contents

Description	*Page*
Power Pedestals	**V1-T5-51**
Lighthouse	**V1-T5-54**
Lighthouse–SS	**V1-T5-58**
Admiral–SS	**V1-T5-62**
Newport Harbor Mate	**V1-T5-65**
Hatteras Light	**V1-T5-69**
Firehouse	**V1-T5-73**
Smart Start	**V1-T5-79**
Mariner	**V1-T5-80**
Digital Electronic Kilowatthour Meters	**V1-T5-81**
Distribution Equipment—Ground Fault Monitor	**V1-T5-82**
Distribution Equipment—Mega Yacht Powerpoint	**V1-T5-83**
Distribution Equipment—Substations	**V1-T5-86**
Distribution Equipment—Panels	
Distribution Equipment—Transformers	**V1-T5-90**

Distribution Equipment—Panels

Product Description

Two of the many products we can offer our customers are Eaton's PRL-3A and PRL-4 panels as standalone units or in one of our substations. All of our busses are made of copper and are load rated; breakers are bolt-on type. Distribution panels can be 120/240 V single-phase, 120/208 V three-phase, 277/480 V three-phase or 220Y/127 V three-phase based on your system requirements. Distribution panels can also have a main breaker or a main lug. Branch circuit breakers are provided based on customer requirements.

Features

- All internal wiring is fine stranded 1000 V insulated copper
- Copper busbars
- All exterior hardware is stainless steel

Available Options

- NEMA 3R or 4X
- Powder-coated stainless steel
- Main breaker up to 1200 A
- Branch breaker 20–1200 A
- Main lug only
- We also offer 480 V models—single-phase and three-phase

Single-Phase

- Up to 1200 A main circuit breakers
- Up to 42 branch circuit breakers

Three-Phase

- Up to 1200 A main circuit breakers
- Up to 42 branch circuit breakers

Standards and Certifications

- UL listed
- cULus listed

UL Listed c UL Listed US

Transformers

Three-Phase Transformer

Contents

Description	*Page*
Power Pedestals	**V1-T5-51**
Lighthouse	**V1-T5-54**
Lighthouse–SS	**V1-T5-58**
Admiral–SS	**V1-T5-62**
Newport Harbor Mate	**V1-T5-65**
Hatteras Light	**V1-T5-69**
Firehouse	**V1-T5-73**
Smart Start	**V1-T5-79**
Mariner	**V1-T5-80**
Digital Electronic Kilowatthour Meters	**V1-T5-81**
Distribution Equipment—Ground Fault Monitor	**V1-T5-82**
Distribution Equipment—Mega Yacht Powerpoint	**V1-T5-83**
Distribution Equipment—Substations	**V1-T5-86**
Distribution Equipment—Panels	**V1-T5-89**
Distribution Equipment—Transformers	

Distribution Equipment—Transformers

Product Description

Because of the high humidity and corrosive conditions of coastal environments, our transformers are wound with Class H heavily insulated copper bar and are double dipped in tough insulating varnish that protects the copper, as well as reduces the hum that is typical in a transformer that is not double dipped. We provide a second overcoat of high temperature epoxy to protect against the severe saltwater environment. We can provide this transformer in single-phase, from 50 to 500 kVA, and three-phase, from 45 to 300 kVA.

Features

- Copper wound transformer coils double dipped in high temperature baking varnish
- All internal wiring is fine stranded 2000 V insulated copper
- Copper busbars
- Marine transformers with epoxy overcoat
- All copper-to-copper connections

Available Options

- Single-phase: 50–500 kVA
- Three-phase: 45–300 kVA
- Epoxy overcoat for non-marine applications

Primary Voltages

- 480 wye three-phase
- 480 V three-phase delta three-wire + ground
- 480 V single-phase two-wire + ground

Secondary Voltages

- 127/220 V three-phase wye four-wire
- 120/208 V three-phase wye four-wire
- 120/240 V single-phase three-wire

Marina Power Distribution Transformer kVA Availabilities

- Single-phase: 50, 75, 100, 150, 167.5, 200, 250, 330, 500 kVA
- Three-phase: 45, 75, 112.5, 150, 225, 300 kVA

Standards and Certifications

- cULus listed

c UL us Listed

Air Conditioning Disconnects

6.1 Air Conditioning Disconnects

Product Description V1-T6-2
Application Description V1-T6-2
Features, Benefits and Functions V1-T6-3
Standards and Certifications V1-T6-3
Product Selection V1-T6-4
Cross-Reference V1-T6-6
Technical Data and Specifications V1-T6-7
Dimensions V1-T6-7

Learn Online

Air Conditioning Disconnects

Fused, Unfused and Molded Case Switch

Complete Line of Fused, Unfused and Molded Case Switch Type Air Conditioning Disconnects

Contents

Description	*Page*
Features, Benefits and Functions	**V1-T6-3**
Standards and Certifications	**V1-T6-3**
Product Selection	**V1-T6-4**
Cross-Reference	**V1-T6-6**
Technical Data and Specifications	**V1-T6-7**
Dimensions	**V1-T6-7**

Product Description

An air conditioning disconnect (ACD) is a disconnect located between a loadcenter (distribution panel) and air conditioner. Eaton's ACD product line provides an installer or repair personnel with a visible disconnecting means when performing maintenance. ACDs are also known as disconnects, pullouts or air conditioning switches.

Non-fused pullout and molded case switch devices provide personnel with a visible ON-OFF disconnecting means. While fused pullout units also perform this function, they also provide an additional level of protection for the air conditioner.

Fused and non-fused devices are of a pullout design, where the user physically removes or "pulls out" a tab to break the electrical connection. A molded case switch is similar to a light switch where the user "switches" the unit to the indicated ON-OFF position.

Fused and Non-Fused Pullouts

- ON/OFF control provided by a pullout handle
- Pullout handle can be conveniently stored in the compartment in the OFF position, helping to prevent the handle from being misplaced
- Protective shield cannot be removed until the pullout handle is removed, disconnecting the power

Molded Case Switch

- Rugged molded case construction in a disconnect switch that looks like a circuit breaker but operates like an ordinary household light switch
- Plug-in molded case switch (included) eliminates the need for pullout handles
- No need for replacement pullout handles due to loss or theft

Application Description

The most widely used application for ACDs is for residential and light commercial air conditioning units. An ACD is installed outdoors, in visible proximity to the air conditioner condensing unit. ACDs are also found in use with heat pumps, swimming pools, spas, whirlpools and pump houses, and meet 2008 NEC Article 422.31 (B) requirements for servicing electric water heaters. Metallic enclosures are galvanized steel and are installed in various locations. Non-metallic enclosures are a plastic (polycarbonate) enclosure commonly used in coastal or salt-water areas.

Features, Benefits and Functions

- Single-phase, two-wire, 240 Vac and three-phase, three-wire, 240 Vac
- NEMA 3R outdoor enclosures offered in metallic and non-metallic versions
- Easy-to-remove high-strength protective shield for easier wiring and mounting
- Easy-to-remove front cover (no screws or fasteners to remove)
- 1-inch knockouts on the bottom, back and side of unit
- Copper-rated line and load lugs that are easily accessible
- Ample wiring space for mounting with a stud gun (single keyhole, two- or three-point mounting)
- Fused devices are service entrance rated

Note: Fused non-metallic units require the addition of **GB4NM** ground bar to obtain a Service Entrance rating.

- Horsepower rated (10 hp maximum at 240 Vac)
- Padlockable door provision for safety and reduction of tampering
- Metallic enclosures are bottom entry and exit only
- Non-metallic enclosures have knockouts and a hub provision for top access
- Non-metallic enclosures have a single unit door and protective shield for installer convenience
- Non-metallic enclosures are durable and provide excellent resistance to climate changes
- Factory-installed tamper-resistant/weather-resistant receptacles are available as an option on some products

Standards and Certifications

- UL listed File No. E132354, E143893, E196365

Contact Eaton for details and part numbers for CSA approved units.

Product Selection

DPU222R

Non-Fused Pullouts

Main Ampere Rating	Maximum hp Rating 120 V	240 V	Wire Size Range Cu/Al 60 °C or 75 °C	Catalog Number
Galvanized Steel				
60	—	10	#14–3	**DPU222R** ①
Non-Metallic/Polycarbonate Enclosure				
60	—	10	#14–2	**ACD222URNM-A2** ①

DPF222R

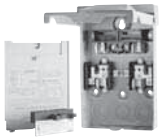

Fused Pullouts

Main Ampere Rating	Maximum hp Rating 120 V	240 V	Wire Size Range Cu/Al 60 °C or 75 °C	Catalog Number
Galvanized Steel				
30 ②	2	3	#14–3	**DPF221R** ①
60 ②	3	10	#14–3	**DPF222R** ①
Non-Metallic				
30	2	3	#14–2	**ACD221RNM-A2** ①
60	3	10	#14–2	**ACD222RNM-A2** ①

For Service Entrance applications, see footnotes below.

DPB222R

Molded Case Switch

Main Ampere Rating	Maximum hp Rating 120 V	240 V	Wire Size Range Cu/Al 60 °C or 75 °C	Catalog Number
Galvanized Steel				
60	—	10	#14–3	**DPB222R** ③
Non-Metallic/Polycarbonate Enclosure				
60	—	10	#14–2	**B60NARNM-A2** ③

Notes

① For replacement pullout head, order part number **96-3258-4**.
② To obtain a Service Entrance Rating, the addition of a **DPFG** (ground bar kit) is required.
③ For replacement molded case switch, order part number **BR260NA**.

DPU222RGF20

ACD with 20 Ampere Ground Fault Receptacle ①

Main Ampere Rating	Maximum hp Rating 120 V	240 V	Wire Size Range Cu/Al 60 °C or 75 °C	Catalog Number
Non-Fused Pullouts				
60	—	10	#14–3	**DPU222RGF20WRTR** ②
60	—	10	#14–3	**DPU222RGF20**
Fused Pullouts				
30	2	3	#14–3	**DPF221RGF20WRTR** ②
30	2	3	#14–3	**DPF221RGF20**
60	3	10	#14–3	**DPF222RGF20WRTR** ②
60	3	10	#14–3	**DPF222RGF20**

DPU222RGF15

ACD with 15 Ampere Ground Fault Receptacle ①③

Main Ampere Rating	Maximum hp Rating 120 V	240 V	Wire Size Range Cu/Al 60 °C or 75 °C	Catalog Number
Non-Fused Pullouts				
60	—	10	#14–3	**DPU222RGF15**
60	—	10	#14–3	**DPU222RGF15WRTR** ②
Fused Pullouts				
30	2	3	#14–3	**DPF221RGF15**
30	2	3	#14–3	**DPF221RGF15WRTR** ②
60	3	10	#14–3	**DPF222RGF15**
60	3	10	#14–3	**DPF222RGF15WRTR** ②

Notes

① Factory-installed GFCI receptacle.
② Includes weather-resistant/tamper-resistant receptacles to meet 2008 NEC Article 406.8 (A) and 406.11 requirements.
③ NEC permits the maximum receptacle rating of a 15 A circuit to be 15 A.

DPU362A

Three-Phase Non-Fused ACD

Main Ampere Rating	Maximum hp Rating 240 V	480 V	Wire Size Range Cu 75 °C	Catalog Number
60	15	30	#14–4	**DPU362RA**

Cross-Reference

Cross-Reference

Description	Catalog Number Eaton	Square D®	GE®	Siemens® (Murray®)	Milbank	Midwest
Metallic/Galvanized Steel Enclosure						
30 A fused	**DPF221R**	—	TF30R	WF2030	U3830	U035F2
60 A fused	**DPF222R**	—	TF60R	WF2060	U3860	U065F1
60 A non-fused	**DPU222R**	—	TFN60R	—	U3800	U065P010
60 A non-fused compact design	**DPU222R**	—	—	WNFC2060	—	—
60 A molded case switch	**DPB222R**	QO200TR	TNA60R1	WNAS2060	—	U065NA1
60 A non-fused with ground fault receptacle	**DPU222RGF**	—	TFN60RGFR	WN2060GFCI	U3822-20GR	U065P010
30 A fused with ground fault receptacle	**DPF221RGF**	—	—	WF2030GFCI	—	U035F010
60 A fused with ground fault receptacle	**DPF222RGF**	—	—	WF2060GFCI	—	U065F010
60 A non-fused with 1/2-inch wire harness	**DPU222R12W** ①	—	—	—	—	—
60 A non-fused with 3/4-inch wire harness	**DPU222R34W** ①	—	—	—	—	—
60 A three-phase 600 V molded case switch	**DPU362RA**	—	—	—	—	U0653F
Non-Metallic/Polycarbonate Enclosure						
30 A fused	**ACD221RNM-A2**	—	TPF30R	WF2030PL	—	P035F
60 A fused	**ACD222RNM-A2**	—	TPF60R	WF2060PL	—	P065F
60 A non-fused	**ACD222URNM-A2**	—	TPN60R1	WN2060PL	—	P065P1
60 A molded case switch	**B60NARNM-A2**	QO200TRNM	TPNA60R1	WNAS2060PL	—	P065NA1
30 A fused with 15 A ground fault receptacle	**DPF221RGF15WRTR**	—	—	—	—	—
30 A fused with 20 A ground fault receptacle	**DPF221RGF20WRTR**	—	—	—	—	—
60 A fused with 15 A ground fault receptacle	**DPF222RGF15WRTR**	—	—	—	—	—
60 A fused with 20 A ground fault receptacle	**DPF222RGF20WRTR**	—	—	—	—	—
60 A non-fused with 15 A ground fault receptacle	**DPU222RGF15WRTR**	—	—	—	—	—
60 A non-fused with 20 A ground fault receptacle	**DPU222RGF20WRTR**	—	—	—	U3822-20GWR	—

Note

① Eaton Quick Pro℠ designated item.

Technical Data and Specifications

- 10,000 amperes rms symmetrical interrupting rating
- Horsepower rated
- Fusible and non-fusible pullout and molded case switch designs
- 30 and 60 amperes available in fusible
- 60 amperes available in non-fusible and molded case switch
- Class H fuse clips provided on fusible pullout design
- WRTR (weather-resistant/ tamper-resistant) receptacle options available

Dimensions

Approximate Dimensions in Inches (mm)

Dimensions and Shipping Carton Information

Catalog Number	Carton Quantity	Dimensions in Inches (mm) Height	Width	Depth	Weight Lbs (kg)
Metallic/Galvanized Steel Enclosure					
DPF221R	10	8.70 (220.9)	5.40 (137.2)	3.15 (80.0)	27 (12)
DPF222R	10	8.70 (220.9)	5.40 (137.2)	3.15 (80.0)	27 (12)
DPU222R	10	8.70 (220.9)	5.40 (137.2)	3.15 (80.0)	27 (12)
DPB222R	10	8.60 (218.4)	5.30 (134.6)	3.74 (95.0)	34 (15)
DPU222R12W ①	1	14.75 (374.6)	12.50 (317.5)	4.00 (101.6)	6 (3)
DPU222R34W ①	1	14.75 (374.6)	12.50 (317.5)	4.00 (101.7)	6 (3)
DPU222RGF20	1	13.00 (330.2)	7.50 (190.5)	4.75 (120.7)	8 (4)
DPF221RGF20	1	13.00 (330.2)	7.50 (190.5)	4.75 (120.7)	8 (4)
DPF222RGF20	1	13.00 (330.2)	7.50 (190.5)	4.75 (120.7)	8 (4)
DPU222RGF15	1	13.00 (330.2)	7.50 (190.5)	4.75 (120.7)	8 (4)
DPF221RGF15	1	13.00 (330.2)	7.50 (190.5)	4.75 (120.7)	8 (4)
DPF222RGF15	1	13.00 (330.2)	7.50 (190.5)	4.75 (120.7)	8 (4)
DPF221RGF15WRTR	1	13.00 (330.2)	7.50 (190.5)	4.75 (120.7)	8 (4)
DPF221RGF20WRTR	1	13.00 (330.2)	7.50 (190.5)	4.75 (120.7)	8 (4)
DPF222RGF15WRTR	1	13.00 (330.2)	7.50 (190.5)	4.75 (120.7)	8 (4)
DPF222RGF20WRTR	1	13.00 (330.2)	7.50 (190.5)	4.75 (120.7)	8 (4)
DPU222RGF15WRTR	1	13.00 (330.2)	7.50 (190.5)	4.75 (120.7)	8 (4)
DPU222RGF20WRTR	1	13.00 (330.2)	7.50 (190.5)	4.75 (120.7)	8 (4)
DPU362R	1	8.60 (218.4)	5.30 (134.6)	3.74 (94.9)	4 (2)
Non-Metallic/Polycarbonate Enclosure					
ACD221RNM-A2	10	8.63 (219.0)	6.26 (159.0)	4.33 (109.9)	15 (7)
ACD222RNM-A2	10	8.63 (219.0)	6.26 (159.0)	4.33 (109.9)	15 (7)
ACD222URNM-A2	10	8.63 (219.0)	6.26 (159.0)	4.33 (109.9)	15 (7)
B60NARNM-A2	10	8.63 (219.0)	6.26 (159.0)	4.33 (109.9)	18 (8)

Note

① Eaton Quick Pro designated item.

Approximate Dimensions in Inches (mm)

DPF221R, DPF222R, DPU222R, DPU222R12W and DPU222R34W

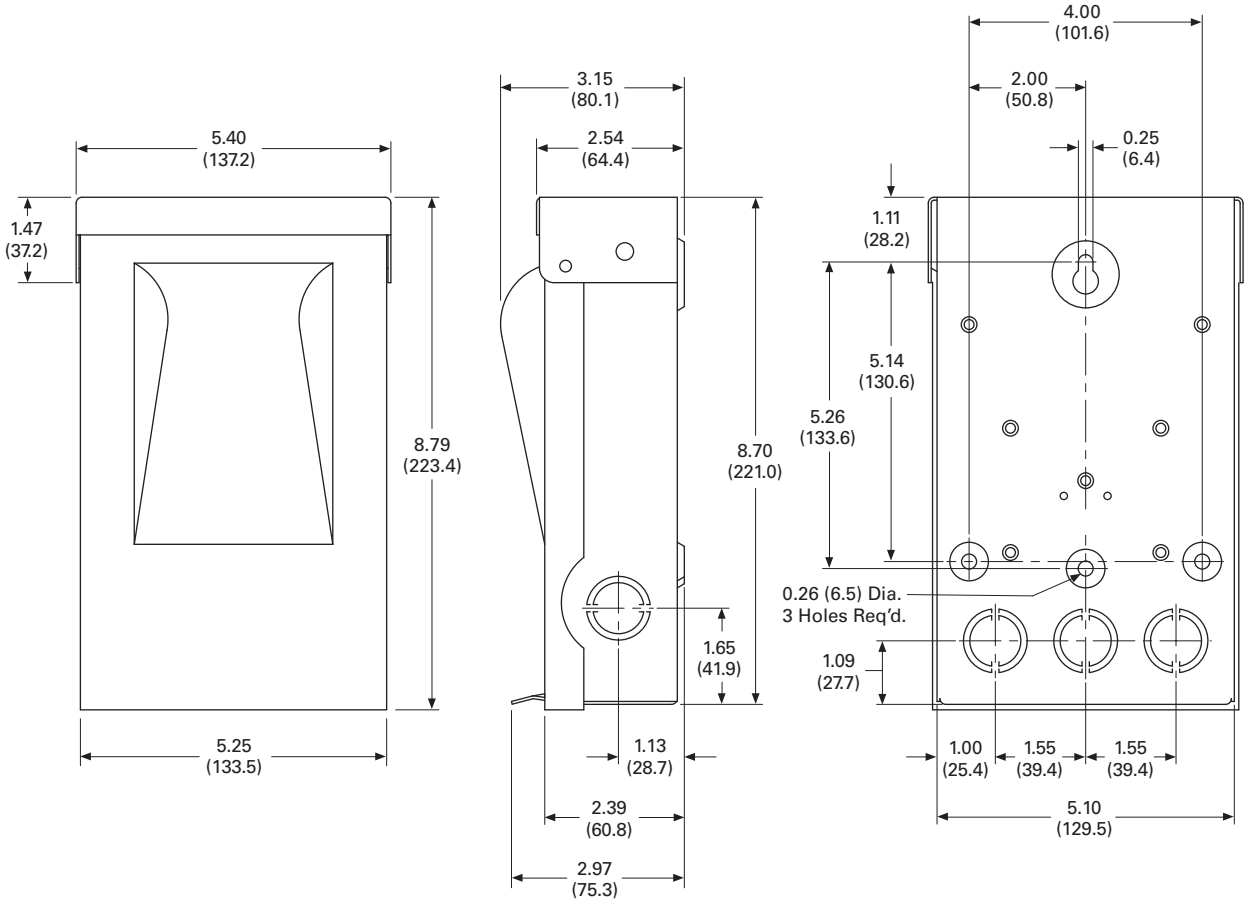

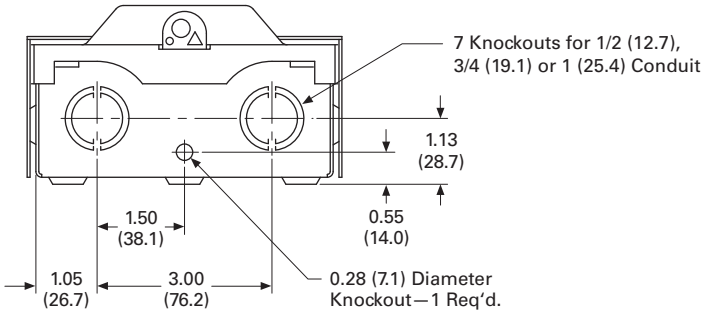

Approximate Dimensions in Inches (mm)

ACD221RNM-A2, ACD222RNM-A2, ACD222URNM-A2 and B60NARNM-A2

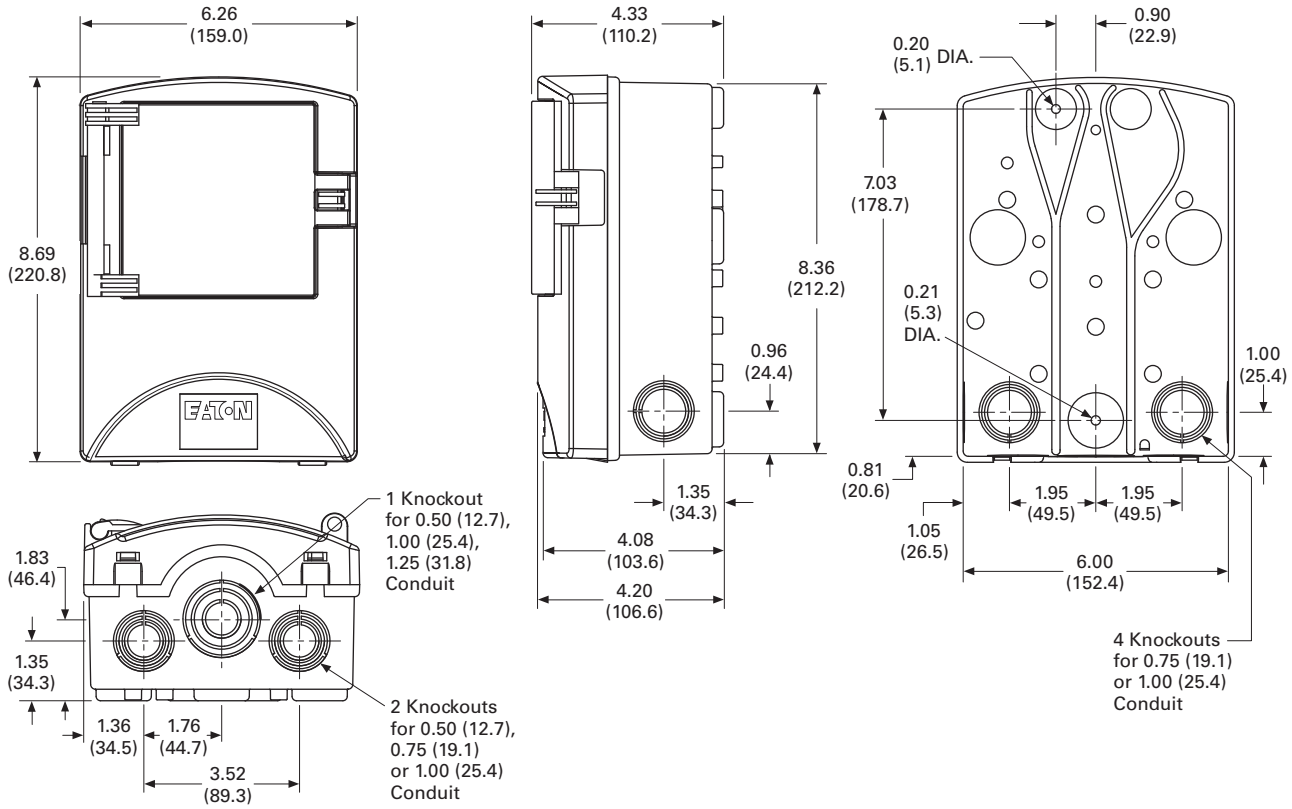

DPB222R and DPU362A

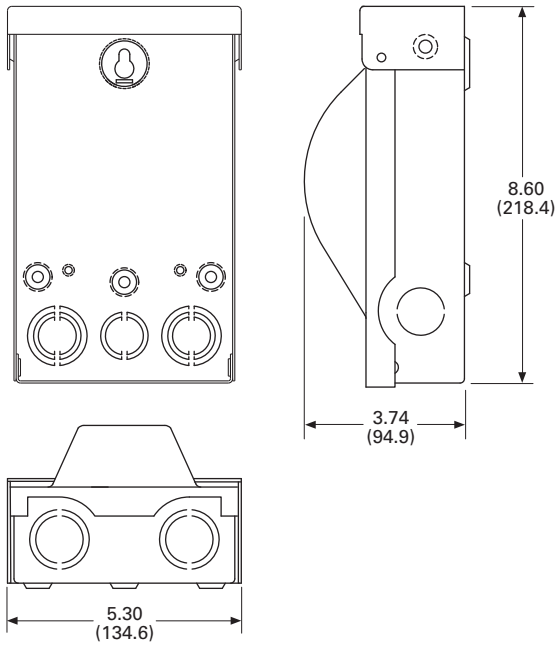

Approximate Dimensions in Inches (mm)

DPU222RGF20, DPF221RGF20, DPF222RGF20, DPU222RGF15, DPF221RGF15, DPF222RGF15, DPF221RGF15WRTR, DPF221RGF20WRTR, DPF222RGF15WRTR, DPF222RGF20WRTR, DPU222RGF15WRTR and DPU222RGF20WRTR

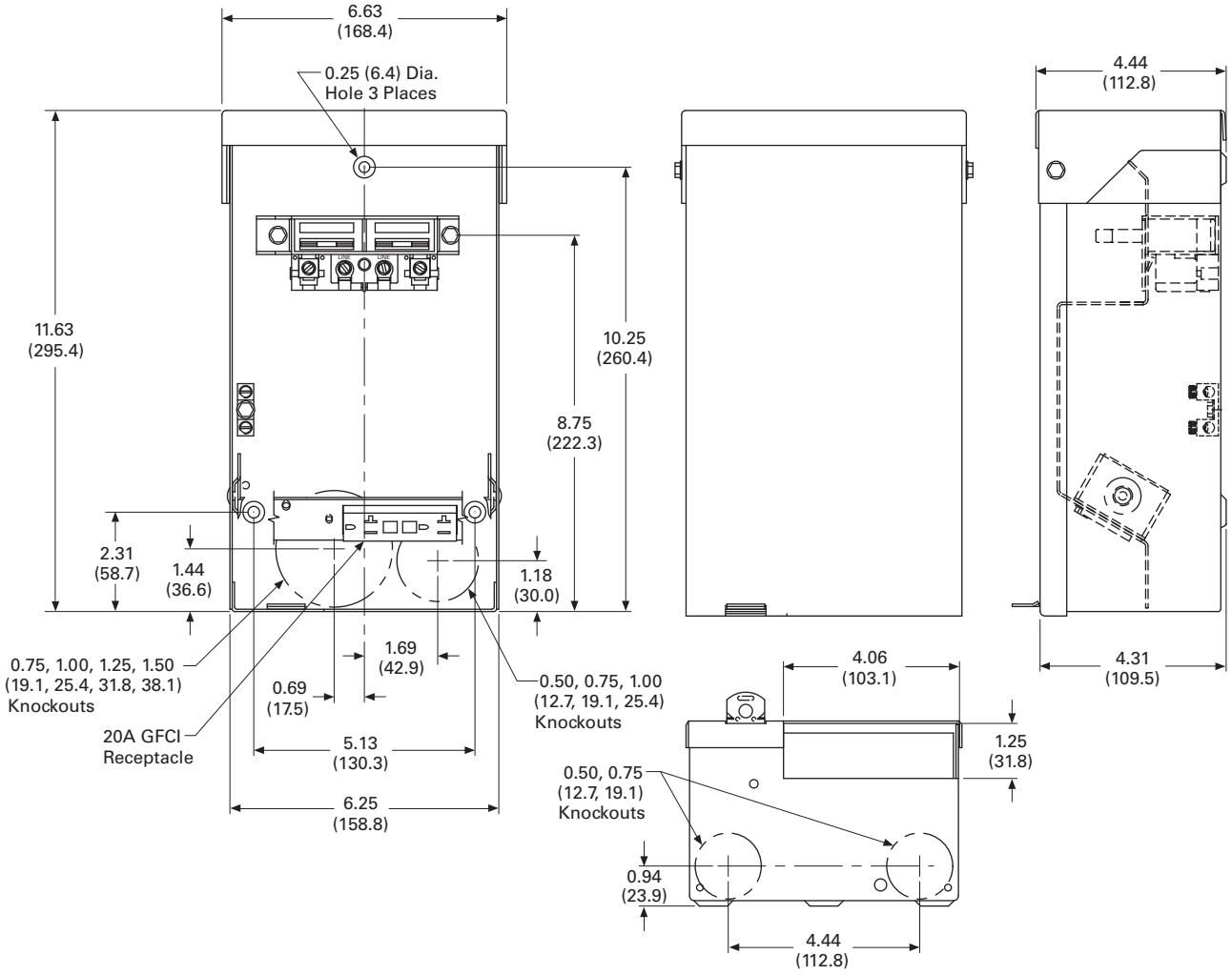

Effective Date: November 1, 2008

Eaton Terms & Conditions

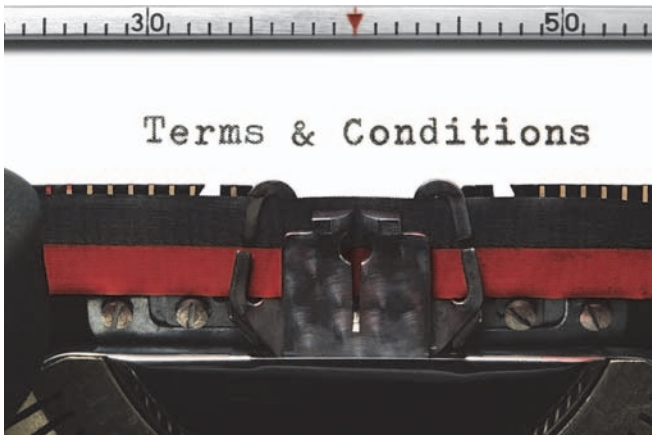

Contents

Description	*Page*
Terms and Conditions of Sale	**V1-A1-1**
Terms of Payment	**V1-A1-2**
Freight	**V1-A1-3**
Warranty	**V1-A1-3**

Selling Policy (Supersedes Selling Policy 25-000, dated February 20, 2006)

Terms and Conditions of Sale

The Terms and Conditions of Sale set forth herein, and any supplements which may be attached hereto, constitute the full and final expression of the contract for the sale of products or services (hereinafter referred to as Product(s) or Services by Eaton Corporation (hereinafter referred to as Seller) to the Buyer, and supersedes all prior quotations, purchase orders, correspondence or communications whether written or oral between the Seller and the Buyer. Notwithstanding any contrary language in the Buyer's purchase order, correspondence or other form of acknowledgment, Buyer shall be bound by these Terms and Conditions of Sale when it sends a purchase order or otherwise indicates acceptance of this contract, or when it accepts delivery from Seller of the Products or Services.

THE CONTRACT FOR SALE OF THE PRODUCTS OR SERVICES IS EXPRESSLY LIMITED TO THE TERMS AND CONDITIONS OF SALE STATED HEREIN. ANY ADDITIONAL OR DIFFERENT TERMS PROPOSED BY BUYER ARE REJECTED UNLESS EXPRESSLY AGREED TO IN WRITING BY SELLER. No contract shall exist except as herein provided.

Complete Agreement

No amendment or modification hereto nor any statement, representation or warranty not contained herein shall be binding on the Seller unless made in writing by an authorized representative of the Seller. Prior dealings, usage of the trade or a course of performance shall not be relevant to determine the meaning of this contract even though the accepting or acquiescing party had knowledge of the nature of the performance and opportunity for objection.

Quotations

Written quotations are valid for 30 days from its date unless otherwise stated in the quotation or terminated sooner by notice.

Verbal quotations, unless accepted, expire the same day they are made.

A complete signed order must be received by Seller within 20 calendar days of notification of award, otherwise the price and shipment will be subject to re-negotiation.

Termination and Cancellation

Any order may be terminated by the Buyer only by written notice and upon payment of reasonable termination charges, including all costs plus profit.

Seller shall have the right to cancel any order at any time by written notice if Buyer breaches any of the terms hereof, becomes the subject of any proceeding under state or federal law for the relief of debtors, or otherwise becomes insolvent or bankrupt, generally does not pay its debts as they become due or makes an assignment for the benefit of creditors.

Appendix 1—Eaton Terms & Conditions

Effective Date: November 1, 2008

Prices

All prices are subject to change without notice. In the event of a price change, the effective date of the change will be the date of the new price or discount sheet, letter or telegram. All quotations made or orders accepted after the effective date will be on the new basis. For existing orders, the price of the unshipped portion of an order will be the price in effect at time of shipment.

Price Policy—Products and Services

When prices are quoted as firm for quoted shipment, they are firm provided the following conditions are met:

1. The order is released with complete engineering details.
2. Shipment of Products are made, and Services purchased are provided within the quoted lead time.
3. When drawings for approval are required for any Products, the drawings applicable to those Products must be returned within 30* calendar days from the date of the original mailing of the drawings by Seller. The return drawings must be released for manufacture and shipment and must be marked "APPROVED" or "APPROVED AS NOTED." Drawing re-submittals which are required for any other reason than to correct Seller errors will not extend the 30-day period.

   * 60 days for orders through contractors to allow time for their review and approval before and after transmitting them to their customers.

If the Buyer initiates or in any way causes delays in shipment, provision of Services or return of approval drawings beyond the periods stated above, the price of the Products or Services will be increased 1% per month or fraction thereof up to a maximum of 18 months from the date of the Buyer's order. For delays resulting in shipment or provision of Services beyond 18 months from the date of the Buyer's order, the price must be renegotiated.

Price Policy—BLS

Refer to Price Policy 25-050.

Minimum Billing

Orders less than $1,000 will be assessed a shipping and handling charge of 5% of the price of the order, with a minimum charge of $25.00 unless noted differently on Product discount sheets.

Taxes

The price does not include any taxes. Buyer shall be responsible for the payment of all taxes applicable to, or arising from the transaction, the Products, its sale, value, or use, or any Services performed in connection therewith regardless of the person or entity actually taxed.

Terms of Payment

Products

Acceptance of all orders is subject to the Buyer meeting Seller's credit requirements. Terms of payment are subject to change for failure to meet such requirements. Seller reserves the right at any time to demand full or partial payment before proceeding with a contract of sale as a result of changes in the financial condition of the Buyer. Terms of Payment are either Net 30 days from the date of invoice of each shipment or carry a cash discount based on Product type. Specific payment terms for Products are outlined in the applicable Product discount schedules.

Services

Terms of payment are net within 30 days from date of invoice for orders amounting to less than $50,000.00.

Terms of payment for orders exceeding $50,000.00 shall be made according to the following:

1. Twenty percent (20%) of order value with the purchase order payable 30 days from date of invoice.
2. Eighty percent (80%) of order value in equal monthly payments over the performance period payable 30 days from date of invoice.

Except for work performed (i) under a firm fixed price basis or (ii) pursuant to terms of a previously priced existing contract between Seller and Buyer, invoices for work performed by Seller shall have added and noted on each invoice a charge of 3% (over and above the price of the work) which is related to Seller compliance with present and proposed environmental, health, and safety regulations associated with prescribed requirements covering hazardous materials management and employee training, communications, personal protective equipment, documentation and record keeping associated therewith.

Adequate Assurances

If, in the judgment of Seller, the financial condition of the Buyer, at any time during the period of the contract, does not justify the terms of payment specified, Seller may require full or partial payment in advance.

Delayed Payment

If payments are not made in accordance with these terms, a service charge will, without prejudice to the right of Seller to immediate payment, be added in an amount equal to the lower of 1.5% per month or fraction thereof or the highest legal rate on the unpaid balance.

Freight

Freight policy will be listed on the Product discount sheets, or at option of Seller one of the following freight terms will be quoted.

F.O.B.—P/S—Frt./Ppd. and Invoiced

Products are sold F.O.B. point of shipment freight prepaid and invoiced to the Buyer.

F.O.B.—P/S—Frt./Ppd. and Allowed

Products sold are delivered F.O.B. point of shipment, freight prepaid and included in the price.

F.O.B. Destination—Frt./Ppd. and Allowed

At Buyer's option, Seller will deliver the Products F.O.B. destination freight prepaid and 2% will be added to the net price.

The term "freight prepaid" means that freight charges will be prepaid to the accessible common carrier delivery point nearest the destination for shipments within the United States and Puerto Rico unless noted differently on the Product discount sheets. For any other destination contact Seller's representative.

Shipment and Routing

Seller shall select the point of origin of shipment, the method of transportation, the type of carrier equipment and the routing of the shipment.

If the Buyer specifies a special method of transportation, type of carrier equipment, routing, or delivery requirement, Buyer shall pay all special freight and handling charges.

When freight is included in the price, no allowance will be made in lieu of transportation if the Buyer accepts shipment at factory, warehouse, or freight station or otherwise supplies its own transportation.

Risk of Loss

Risk of loss or damage to the Products shall pass to Buyer at the F.O.B. point.

Concealed Damage

Except in the event of F.O.B. destination shipments, Seller will not participate in any settlement of claims for concealed damage.

When shipment has been made on an F.O.B. destination basis, the Buyer must unpack immediately and, if damage is discovered must:

1. Not move the Products from the point of examination.
2. Retain shipping container and packing material.
3. Notify the carrier in writing of any apparent damage.
4. Notify Seller representative within 72 hours of delivery.
5. Send Seller a copy of the carrier's inspection report.

Witness Tests/Customer Inspection

Standard factory tests may be witnessed by the Buyer at Seller's factory for an additional charge calculated at the rate of $2,500 per day (not to exceed eight (8) hours) per Product type. Buyer may final inspect Products at the Seller's factory for $500 per day per Product type.

Witness tests will add one (1) week to the scheduled shipping date. Seller will notify Buyer fourteen (14) calendar days prior to scheduled witness testing or inspection. In the event Buyer is unable to attend, the Parties shall mutually agree on a rescheduled date. However, Seller reserves the right to deem the witness tests waived with the right to ship and invoice Products.

Held Orders

For any order held, delayed or rescheduled at the request of the Buyer, Seller may, at its sole option (1) require payment to be based on any reasonable basis, including but not limited to the contract price, and any additional expenses, or cost resulting from such a delay; (2) store Products at the sole cost and risk of loss of the Buyer; and/or (3) charge to the Buyer those prices under the applicable price policy. Payment for such price, expenses and costs, in any such event, shall be due by Buyer within thirty (30) days from date of Seller's invoice. Any order so held delayed or rescheduled beyond six (6) months will be treated as a Buyer termination.

Drawing Approval

Seller will design the Products in line with, in Seller's judgment, good commercial practice. If at drawing approval Buyer makes changes outside of the design as covered in their specifications, Seller will then be paid reasonable charges and allowed a commensurate delay in shipping date based on the changes made.

Drawing Re-Submittal

When Seller agrees to do so in its quotation, Seller shall provide Buyer with the first set of factory customer approval drawing(s) at Seller's expense. The customer approval drawing(s) will be delivered at the quoted delivery date. If Buyer requests drawing changes or additions after the initial factory customer approval drawing(s) have been submitted by Seller, the Seller, at its option, may assess Buyer drawing charges. Factory customer approval drawing changes required due to misinterpretation by Seller will be at Seller's expense. Approval drawings generated by Bid Manager are excluded from this provision.

Warranty

Warranty for Products

Seller warrants that the Products manufactured by it will conform to Seller's applicable specifications and be free from failure due to defects in workmanship and material for one (1) year from the date of installation of the Product or eighteen (18) months from the date of shipment of the Product, whichever occurs first.

In the event any Product fails to comply with the foregoing warranty Seller will, at its option, either (a) repair or replace the defective Product, or defective part or component thereof, F.O.B. Seller's facility freight prepaid, or (b) credit Buyer for the purchase price of the Product. All warranty claims shall be made in writing.

Seller requires all non-conforming Products be returned at Seller's expense for evaluation unless specifically stated otherwise in writing by Seller.

This warranty does not cover failure or damage due to storage, installation, operation or maintenance not in conformance with Seller's recommendations and industry standard practice or due to accident, misuse, abuse or negligence. This warranty does not cover reimbursement for labor, gaining access, removal, installation, temporary power or any other expenses, which may be incurred in connection with repair or replacement.

This warranty does not apply to equipment not manufactured by Seller. Seller limits itself to extending the same warranty it receives from the supplier.

Effective Date: November 1, 2008

Extended Warranty for Products

If requested by the Buyer and specifically accepted in writing by Seller, the foregoing standard warranty for Products will be extended from the date of shipment for the period and price indicated below:

- 24 months—2% of Contract Price
- 30 months—3% of Contract Price
- 36 months—4% of Contract Price

Special Warranty (In and Out) for Products

If requested by the Buyer and specifically accepted in writing by Seller, Seller will, during the warranty period for Products, at an additional cost of 2% of the contract price, be responsible for the direct cost of:

1. Removing the Product from the installed location.
2. Transportation to the repair facility and return to the site.
3. Reinstallation on site.

The total liability of Seller for this Special Warranty for Products is limited to 50% of the contract price of the particular Product being repaired and excludes expenses for removing adjacent apparatus, walls, piping, structures, temporary service, etc.

Warranty for Services

Seller warrants that the Services performed by it hereunder will be performed in accordance with generally accepted professional standards.

The Services, which do not so conform, shall be corrected by Seller upon notification in writing by the Buyer within one (1) year after completion of the Services.

Unless otherwise agreed to in writing by Seller, Seller assumes no responsibility with respect to the suitability of the Buyer's, or its customer's, equipment or with respect to any latent defects in equipment not supplied by Seller. This warranty does not cover damage to Buyer's, or its customer's, equipment, components or parts resulting in whole or in part from improper maintenance or operation or from their deteriorated condition. Buyer will, at its cost, provide Seller with unobstructed access to the defective Services, as well as adequate free working space in the immediate vicinity of the defective Services and such facilities and systems, including, without limitation, docks, cranes and utility disconnects and connects, as may be necessary in order that Seller may perform its warranty obligations. The conducting of any tests shall be mutually agreed upon and Seller shall be notified of, and may be present at, all tests that may be made.

Warranty for Power Systems Studies

Seller warrants that any power systems studies performed by it will conform to generally accepted professional standards. Any portion of the study, which does not so conform, shall be corrected by Seller upon notification in writing by the Buyer within six (6) months after completion of the study. All warranty work shall be performed in a single shift straight time basis Monday through Friday. In the event that the study requires correction of warranty items on an overtime schedule, the premium portion of such overtime shall be for the Buyer's account.

Limitation on Warranties for Products, Services and Power Systems Studies

THE FOREGOING WARRANTIES ARE EXCLUSIVE EXCEPT FOR WARRANTY OF TITLE. SELLER DISCLAIMS ALL OTHER WARRANTIES INCLUDING ANY IMPLIED WARRANTIES OF MERCHANTABILITY AND FITNESS FOR A PARTICULAR PURPOSE.

CORRECTION OF NON-CONFORMITIES IN THE MANNER AND FOR THE PERIOD OF TIME PROVIDED ABOVE SHALL CONSTITUTE SELLER'S SOLE LIABILITY AND BUYER'S EXCLUSIVE REMEDY FOR FAILURE OF SELLER TO MEET ITS WARRANTY OBLIGATIONS, WHETHER CLAIMS OF THE BUYER ARE BASED IN CONTRACT, IN TORT (INCLUDING NEGLIGENCE OR STRICT LIABILITY), OR OTHERWISE.

Asbestos

Federal Law requires that building or facility owners identify the presence, location and quantity of asbestos containing material (hereinafter "ACM") at work sites. Seller is not licensed to abate ACM. Accordingly, for any contract which includes the provision of Services, prior to (i) commencement of work at any site under a specific Purchase Order, (ii) a change in the work scope of any Purchase Order, the Buyer will certify that the work area associated with the Seller's scope of work includes the handling of Class II ACM, including but not limited to generator wedges and high temperature gaskets which include asbestos materials. The Buyer shall, at its expense, conduct abatement should the removal, handling, modification or reinstallation, or some or all of them, of said Class II ACM be likely to generate airborne asbestos fibers; and should such abatement affect the cost of or time of performance of the work then Seller shall be entitled to an equitable adjustment in the schedule, price and other pertinent affected provisions of the contract.

Compliance with Nuclear Regulation

Seller's Products are sold as commercial grade Products not intended for application in facilities or activities licensed by the United States Nuclear Regulatory Commission for atomic purposes. Further certification will be required for use of the Products in any safety-related application in any nuclear facility licensed by the U.S. Nuclear Regulatory Commission.

Returning Products

Authorization and shipping instructions for the return of any Products must be obtained from Seller before returning the Products.

When return is occasioned due to Seller error, full credit including all transportation charges will be allowed.

Product Notices

Buyer shall provide the user (including its employees) of the Products with all Seller supplied Product notices, warnings, instructions, recommendations, and similar materials.

Force Majeure

Seller shall not be liable for failure to perform or delay in performance due to fire, flood, strike or other labor difficulty, act of God, act of any governmental authority or of the Buyer, riot, embargo, fuel or energy shortage, car shortage, wrecks or delays in transportation, or due to any other cause beyond Seller's reasonable control. In the event of delay in performance due to any such cause, the date of delivery or time for completion will be extended by a period of time reasonably necessary to overcome the effect of such delay.

Liquidated Damages

Contracts which include liquidated damage clauses for failure to meet shipping or job completion promises are not acceptable or binding on Seller, unless such clauses are specifically accepted in writing by an authorized representative of the Seller at its headquarters office.

Patent Infringement

Seller will defend or, at its option, settle any suit or proceeding brought against Buyer, or Buyer's customers, to the extent it is based upon a claim that any Product or part thereof, manufactured by Seller or its subsidiaries and furnished hereunder, infringes any United States patent, other than a claim of infringement based upon use of a Product or part thereof in a process, provided Seller is notified in reasonable time and given authority, information and assistance (at Seller's expense) for the defense of same. Seller shall pay all legal and court costs and expenses and court-assessed damages awarded therein against Buyer resulting from or incident to such suit or proceeding. In addition to the foregoing, if at any time Seller determines there is a substantial question of infringement of any United States patent, and the use of such Product is or may be enjoined, Seller may, at its option and expense: either (a) procure for Buyer the right to continue using and selling the Product; (b) replace the Product with non-infringing apparatus; (c) modify the Product so it becomes non-infringing; or (d) as a last resort, remove the Product and refund the purchase price, equitably adjusted for use and obsolescence. In no case does Seller agree to pay any recovery based upon its Buyer's savings or profit through use of Seller's Products whether the use be special or ordinary. The foregoing states the entire liability of Seller for patent infringement.

The preceding paragraph does not apply to any claim of infringement based upon: (a) any modification made to a Product other than by Seller; (b) any design and/or specifications of Buyer to which a Product was manufactured; or (c) the use or combination of Product with other products where the Product does not itself infringe. As to the above-identified claim situations where the preceding paragraph does not apply, Buyer shall defend and hold Seller harmless in the same manner and to the extent as Seller's obligations described in the preceding paragraph. Buyer shall be responsible for obtaining (at Buyer's expense) all license rights required for Seller to be able to use software products in the possession of Buyer where such use is required in order to perform any Service for Buyer.

With respect to a Product or part thereof not manufactured by Seller or its subsidiaries, Seller will attempt to obtain for Buyer, from the supplier(s), the patent indemnification protection normally provided by the supplier(s) to customers.

Limitation of Liability

THE REMEDIES OF THE BUYER SET FORTH IN THIS CONTRACT ARE EXCLUSIVE AND ARE ITS SOLE REMEDIES FOR ANY FAILURE OF SELLER TO COMPLY WITH ITS OBLIGATIONS HEREUNDER.

NOTWITHSTANDING ANY PROVISION IN THIS CONTRACT TO THE CONTRARY, IN NO EVENT SHALL SELLER BE LIABLE IN CONTRACT, IN TORT (INCLUDING NEGLIGENCE OR STRICT LIABILITY) OR OTHERWISE FOR DAMAGE TO PROPERTY OR EQUIPMENT OTHER THAN PRODUCTS SOLD HEREUNDER, LOSS OF PROFITS OR REVENUE, LOSS OF USE OF PRODUCTS, COST OF

CAPITAL, CLAIMS OF CUSTOMERS OF THE BUYER OR ANY SPECIAL, INDIRECT, INCIDENTAL OR CONSEQUENTIAL DAMAGES WHATSOEVER, REGARDLESS OF WHETHER SUCH POTENTIAL DAMAGES ARE FORESEEABLE OR IF SELLER HAS BEEN ADVISED OF THE POSSIBILITY OF SUCH DAMAGES.

THE TOTAL CUMULATIVE LIABILITY OF SELLER ARISING FROM OR RELATED TO THIS CONTRACT WHETHER THE CLAIMS ARE BASED IN CONTRACT, IN TORT (INCLUDING NEGLIGENCE OR STRICT LIABILITY) OR OTHERWISE, SHALL NOT EXCEED THE PRICE OF THE PRODUCT OR SERVICES ON WHICH SUCH LIABILITY IS BASED.

A

ACD V1-**T6**-4, V1-**T6**-6
ACD2 . . . . . V1-**T6**-4, V1-**T6**-6
ARP V1-**T4**-77, V1-**T5**-8
ARP0 . . . . . V1-**T4**-30, V1-**T4**-33, V1-**T4**-85

B

BD V1-**T1**-81
BH V1-**T1**-85
BHG V1-**T1**-85
BHL V1-**T1**-85
BHT V1-**T1**-85
BIN V1-**T1**-25
BINA V1-**T1**-22, V1-**T1**-25, V1-**T1**-61, V1-**T1**-92
BJ V1-**T1**-84, V1-**T1**-85
BJH V1-**T1**-84, V1-**T1**-85
BJL V1-**T1**-86
BQ V1-**T1**-81
BQC V1-**T1**-83
BR V1-**T2**-10
BRB V1-**T1**-26
BRC V1-**T1**-26, V1-**T1**-57
BRD V1-**T1**-26, V1-**T1**-82, V1-**T1**-85
BRE V1-**T1**-85
BRF V1-**T1**-61
BRG V1-**T1**-26, V1-**T1**-59, V1-**T1**-66, V1-**T1**-93
BRH V1-**T1**-52, V1-**T1**-77, V1-**T1**-78, V1-**T1**-85, V1-**T4**-98, V1-**T4**-127
BRHH V1-**T1**-77, V1-**T4**-98, V1-**T4**-127
BRL V1-**T1**-26, V1-**T1**-52, V1-**T1**-57, V1-**T1**-61, V1-**T1**-78, V1-**T1**-85
BRL2 . . . . . V1-**T1**-79
BRM V1-**T1**-61, V1-**T1**-86
BRP V1-**T1**-86
BRQ V1-**T1**-85
BRR V1-**T1**-61
BRS V1-**T1**-15, V1-**T1**-52, V1-**T1**-61, V1-**T1**-84, V1-**T4**-139
BRSF V1-**T4**-139
BRSUR V1-**T1**-15, V1-**T2**-9
BRW V1-**T1**-84
BRX V1-**T1**-77
BR1 . . . . . V1-**T1**-46–V1-**T1**-49, V1-**T1**-51, V1-**T1**-53, V1-**T1**-59, V1-**T1**-60, V1-**T1**-77, V1-**T1**-78, V1-**T1**-82
BR2 . . . . . V1-**T1**-46–V1-**T1**-49, V1-**T1**-51–V1-**T1**-52, V1-**T1**-57, V1-**T1**-59, V1-**T1**-60, V1-**T1**-77, V1-**T1**-82, V1-**T1**-84, V1-**T4**-98, V1-**T4**-127, V1-**T5**-22
BR23 . . . . . V1-**T2**-7
BR25 . . . . . V1-**T2**-7
BR3 . . . . . V1-**T1**-46, V1-**T1**-49, V1-**T1**-51–V1-**T1**-52, V1-**T1**-57, V1-**T1**-59, V1-**T1**-78, V1-**T1**-82
BR4 . . . . . V1-**T1**-46–V1-**T1**-49, V1-**T1**-51–V1-**T1**-53, V1-**T1**-57, V1-**T1**-82
BR42 . . . . . V1-**T1**-47
BR5 . . . . . V1-**T1**-58
BR6 . . . . . V1-**T1**-48
BR8 . . . . . V1-**T1**-46, V1-**T1**-48, V1-**T1**-49, V1-**T1**-51, V1-**T1**-52
BSC V1-**T1**-22
BSS V1-**T1**-22, V1-**T1**-61
BW V1-**T1**-61, V1-**T4**-43
BWFP V1-**T1**-61
B424 . . . . . V1-**T1**-47
B60N V1-**T6**-4, V1-**T6**-6

C

CC V1-**T1**-38, V1-**T1**-56, V1-**T1**-85, V1-**T1**-95
CCH V1-**T1**-95
CCL V1-**T1**-38, V1-**T1**-85
CCV V1-**T1**-95, V1-**T4**-95
CCVH V1-**T1**-95, V1-**T4**-95, V1-**T4**-98, V1-**T4**-137
CCV2 . . . . . V1-**T4**-95, V1-**T4**-98, V1-**T4**-127, V1-**T4**-137
CC3 . . . . . V1-**T1**-95, V1-**T4**-137
CG V1-**T4**-76
CH V1-**T1**-90
CHB V1-**T1**-22, V1-**T1**-61, V1-**T5**-8
CHE V1-**T1**-16, V1-**T1**-23
CHEC V1-**T2**-9
CHEG V1-**T3**-14, V1-**T3**-18
CHF V1-**T1**-22, V1-**T1**-32, V1-**T1**-33
CHFL V1-**T5**-7
CHG V1-**T1**-25
CHH V1-**T1**-38
CHI V1-**T5**-8
CHL V1-**T1**-11, V1-**T1**-16, V1-**T1**-38, V1-**T1**-99, V1-**T5**-8
CHLD V1-**T5**-8
CHLDF V1-**T5**-8, V1-**T5**-9
CHM V1-**T1**-22, V1-**T1**-38, V1-**T4**-41, V1-**T5**-12, V1-**T5**-17
CHMM V1-**T4**-41
CHM1 . . . . . V1-**T5**-12, V1-**T5**-17
CHM4 . . . . . V1-**T5**-17
CHM5 . . . . . V1-**T5**-12
CHM7 . . . . . V1-**T5**-12
CHN V1-**T1**-22, V1-**T1**-25, V1-**T5**-9
CHOU V1-**T5**-9
CHP V1-**T1**-24, V1-**T1**-36–V1-**T1**-38, V1-**T5**-23
CHPA V1-**T5**-7, V1-**T5**-23
CHPE V1-**T5**-7, V1-**T5**-23
CHPO V1-**T5**-8, V1-**T5**-9
CHQ V1-**T1**-97, V1-**T2**-10
CHR V1-**T1**-22, V1-**T5**-12, V1-**T5**-17
CHR1 . . . . . V1-**T5**-12, V1-**T5**-17
CHR3 . . . . . V1-**T5**-12
CHR7 . . . . . V1-**T5**-12
CHS V1-**T1**-15, V1-**T1**-16, V1-**T1**-22
CHSA V1-**T2**-10
CHSPC V1-**T2**-6
CHSPF V1-**T2**-6
CHSPT V1-**T2**-4–V1-**T2**-6
CHSP3 . . . . . V1-**T2**-6
CHSUR V1-**T2**-9
CHT V1-**T1**-35
CHTE V1-**T5**-7

CHU V1-**T4**-84, V1-**T4**-85, V1-**T5**-11, V1-**T5**-17
CHUD V1-**T5**-9
CHU1 . . . . . V1-**T5**-11, V1-**T5**-17
CHU2 . . . . . V1-**T4**-84, V1-**T5**-11
CHU3 . . . . . V1-**T5**-11
CHU4 . . . . . V1-**T5**-11, V1-**T5**-17
CHU5 . . . . . V1-**T5**-11
CHU6 . . . . . V1-**T5**-11
CHU7 . . . . . V1-**T5**-11
CHVH V1-**T4**-127
CH1 . . . . . V1-**T1**-7, V1-**T1**-10, V1-**T1**-13, V1-**T1**-23, V1-**T1**-32–V1-**T1**-35, V1-**T1**-37, V1-**T1**-38, V1-**T3**-17, V1-**T3**-18, V1-**T4**-84
CH2 . . . . . V1-**T1**-7–V1-**T1**-10, V1-**T1**-11, V1-**T1**-13, V1-**T1**-17, V1-**T1**-18, V1-**T1**-23, V1-**T1**-32–V1-**T1**-35, V1-**T1**-37, V1-**T4**-77, V1-**T4**-84, V1-**T4**-85
CH2L V1-**T1**-9
CH23 . . . . . V1-**T2**-7
CH25 . . . . . V1-**T2**-7
CH3 . . . . . V1-**T1**-7, V1-**T1**-8, V1-**T1**-10–V1-**T1**-14, V1-**T1**-17, V1-**T1**-18, V1-**T1**-23, V1-**T1**-32–V1-**T1**-35, V1-**T3**-14
CH4 . . . . . V1-**T1**-7–V1-**T1**-14, V1-**T1**-17, V1-**T1**-18, V1-**T1**-23, V1-**T3**-17, V1-**T3**-18
CH4L V1-**T1**-9
CH5 . . . . . V1-**T1**-14, V1-**T4**-85
CH6 . . . . . V1-**T1**-13, V1-**T1**-14, V1-**T1**-17, V1-**T1**-23, V1-**T3**-17, V1-**T3**-18
CH7 . . . . . V1-**T1**-7, V1-**T1**-10–V1-**T1**-13, V1-**T1**-24
CH8 . . . . . V1-**T1**-7–V1-**T1**-11, V1-**T1**-17, V1-**T1**-18, V1-**T1**-23, V1-**T1**-26, V1-**T3**-17, V1-**T3**-18
CH8L V1-**T1**-9
CH9 . . . . . V1-**T1**-25, V1-**T1**-38, V1-**T1**-61
CLRP V1-**T1**-98
CL1 . . . . . V1-**T1**-98
CL2 . . . . . V1-**T1**-98
CMB V1-**T4**-41, V1-**T4**-42, V1-**T4**-66
CMBB V1-**T4**-41
CMBE V1-**T4**-50, V1-**T4**-51, V1-**T4**-66, V1-**T4**-86
CMBX V1-**T4**-42
CSH V1-**T1**-11, V1-**T1**-16
CSH2 . . . . . V1-**T1**-11, V1-**T4**-43
CSR V1-**T1**-11, V1-**T1**-16, V1-**T1**-22, V1-**T1**-52, V1-**T4**-43, V1-**T5**-22
CSR2 . . . . . V1-**T1**-11, V1-**T4**-43
CTA V1-**T4**-117
CVH V1-**T4**-137
CVH2 . . . . . V1-**T4**-97, V1-**T4**-98, V1-**T4**-127
CVS V1-**T4**-137
CVS2 . . . . . V1-**T4**-97, V1-**T4**-98, V1-**T4**-127
CV2 . . . . . V1-**T4**-97, V1-**T4**-98, V1-**T4**-127, V1-**T4**-137
CV3 . . . . . V1-**T4**-137

D

DPB V1-**T6**-4, V1-**T6**-6
DPB2 . . . . . V1-**T6**-4, V1-**T6**-6
DPF V1-**T6**-4–V1-**T6**-6
DPF2 . . . . . V1-**T6**-4–V1-**T6**-6
DPU V1-**T6**-4–V1-**T6**-6
DPU2 . . . . . V1-**T6**-4–V1-**T6**-5
DS V1-**T1**-25, V1-**T1**-66, V1-**T5**-7
DS1 . . . . . V1-**T4**-67
DS2 . . . . . V1-**T4**-67
DS3 . . . . . V1-**T4**-67
DS9 . . . . . V1-**T4**-67

E

ECC V1-**T1**-95
ECCV V1-**T1**-95
EDL V1-**T4**-34
EGEN V1-**T3**-3, V1-**T3**-4
EGS V1-**T3**-18
EHD V1-**T4**-137
EPBD V1-**T4**-34
EPBQ V1-**T4**-34
EPBS V1-**T4**-34
EPBT V1-**T4**-34
ESL V1-**T4**-34

G

GB V1-**T1**-25, V1-**T1**-66, V1-**T1**-93
GBK V1-**T5**-9
GFC V1-**T1**-79, V1-**T1**-80
GFE V1-**T1**-80
GHC V1-**T5**-75
GTAP V1-**T1**-59

H

HL V1-**T1**-85
HPB V1-**T4**-77
HPC V1-**T4**-76
HPP V1-**T4**-77
HP2 . . . . . V1-**T4**-77
HP4 . . . . . V1-**T4**-76, V1-**T4**-77
HP8 . . . . . V1-**T4**-76

I

IG12 . . . . . V1-**T2**-8
IG52 . . . . . V1-**T2**-8
IG53 . . . . . V1-**T2**-8
IMM V1-**T4**-67

J

JT V1-**T5**-75

L

LC V1-**T1**-22, V1-**T1**-61

M

MBB V1-**T4**-41
MBE V1-**T4**-50, V1-**T4**-66
MBED V1-**T4**-60
MBER V1-**T4**-51
MBE1 . . . . . V1-**T4**-50, V1-**T4**-51
MBE2 . . . . . V1-**T4**-50, V1-**T4**-51
MBE3 . . . . . V1-**T4**-51
MBE4 . . . . . V1-**T4**-51

MBE8 . . . . . V1-**T4**-51
MBH V1-**T4**-67
MBP V1-**T4**-41
MBT V1-**T4**-42
MBX V1-**T4**-41
MB1 . . . . . V1-**T4**-42
MB2 . . . . . V1-**T4**-66
MB20 . . . . . V1-**T4**-42
MB4 . . . . . V1-**T4**-42
MB5 . . . . . V1-**T4**-67
MB8 . . . . . V1-**T4**-42, V1-**T4**-66
MCB V1-**T1**-38, V1-**T1**-85, V1-**T4**-43
MCBK V1-**T4**-43
MHD V1-**T5**-23
MHM. V1-**T5**-22
MHP V1-**T5**-23
MHR V1-**T5**-22
MM V1-**T4**-139
MPL. V1-**T5**-75–V1-**T5**-77
MPLFH V1-**T5**-77
MSEG V1-**T2**-6, V1-**T4**-35
MSL. V1-**T4**-142
MST. V1-**T4**-142

N

NL V1-**T1**-22, V1-**T1**-61

Q

QCF. V1-**T5**-75
QCGF V1-**T5**-75

R

RH V1-**T1**-66
RN V1-**T1**-18
RV V1-**T5**-75, V1-**T5**-77

S

SPC V1-**T1**-22, V1-**T1**-61
SP1 . . . . . V1-**T2**-4
SR V1-**T1**-39, V1-**T1**-86
SRL V1-**T1**-22, V1-**T1**-61
ST V1-**T1**-39
STL V1-**T4**-26

T

TCD V1-**T1**-22, V1-**T1**-61
TDL V1-**T1**-22, V1-**T1**-61
TH V1-**T1**-85
TT120 . . . . . V1-**T1**-21

U

UAHT. V1-**T4**-5
UAST. V1-**T4**-26
UAT V1-**T4**-20
UATE. V1-**T4**-15
UATH. V1-**T4**-12, V1-**T4**-13
UATR. V1-**T4**-4–V1-**T4**-6
UATZ. V1-**T4**-6, V1-**T4**-21
UBEH. V1-**T4**-14
UBGT. V1-**T4**-15
UBH V1-**T4**-20, V1-**T4**-21
UBHR. V1-**T4**-5, V1-**T4**-6, V1-**T4**-14
UBHT. V1-**T4**-5
UBTE V1-**T4**-14
UBTH. V1-**T4**-12, V1-**T4**-13
UBTR V1-**T4**-6
UEHT V1-**T4**-20
UETH V1-**T4**-14
UE7 . . . . . V1-**T4**-14
UFHT V1-**T4**-4–V1-**T4**-5
UFT V1-**T4**-12, V1-**T4**-15
UFTE V1-**T4**-14
UFTH V1-**T4**-12
UFTR V1-**T4**-5
UGE V1-**T4**-15
UGHR. V1-**T4**-5
UGHT. V1-**T4**-4–V1-**T4**-6, V1-**T4**-31
UGRS. V1-**T4**-6
UGTE V1-**T4**-14, V1-**T4**-15
UGTH. V1-**T4**-12
UGTR V1-**T4**-4, V1-**T4**-5, V1-**T4**-31
UHI. V1-**T4**-20
UHIR V1-**T4**-5
UHT V1-**T4**-20, V1-**T4**-21
UHTR V1-**T4**-4–V1-**T4**-6, V1-**T4**-28, V1-**T4**-31
UHTT V1-**T4**-4, V1-**T4**-6, V1-**T4**-20
UH4 . . . . . V1-**T4**-12
UH5 . . . . . V1-**T4**-12
UH7 . . . . . V1-**T4**-12
UIH. V1-**T4**-14
ULTS V1-**T4**-26
UNRR. V1-**T4**-7
URRS V1-**T4**-7
URS V1-**T4**-4, V1-**T4**-6, V1-**T4**-7
URT V1-**T4**-22
URTR V1-**T4**-7
USTH V1-**T4**-26
USTL V1-**T4**-26
USTS V1-**T4**-26
UST6 . . . . . V1-**T4**-26
UTE V1-**T4**-14, V1-**T4**-32
UTH V1-**T4**-12, V1-**T4**-13, V1-**T4**-32
UTRS V1-**T4**-4–V1-**T4**-7, V1-**T4**-31
UTTE V1-**T4**-14, V1-**T4**-15
UTTH V1-**T4**-12
UTZR V1-**T4**-6
UT2 . . . . . V1-**T4**-20, V1-**T4**-21
UT3 . . . . . V1-**T4**-21
UT4 . . . . . V1-**T4**-20, V1-**T4**-21
UT5 . . . . . V1-**T4**-21
UT6 . . . . . V1-**T4**-21
U2R V1-**T4**-22
U2V V1-**T4**-22
U3R V1-**T4**-20, V1-**T4**-22
U3V V1-**T4**-22
U4R V1-**T4**-20–V1-**T4**-22

U5R V1-**T4**-20–V1-**T4**-22
U6R V1-**T4**-20
U921 . . . . . V1-**T4**-5

W

WCG V1-**T4**-138

Numerics

1BPS V1-**T4**-108
1MCB V1-**T4**-104, V1-**T4**-105
1MFS. V1-**T4**-106, V1-**T4**-107
1MHC V1-**T4**-104, V1-**T4**-105
1MM V1-**T4**-115, V1-**T4**-121, V1-**T4**-138, V1-**T4**-139, V1-**T4**-141
1MMA. V1-**T4**-138
1MMB. V1-**T4**-138–V1-**T4**-142
1MMC. V1-**T4**-140
1MMG. V1-**T4**-94
1MMJ V1-**T4**-139
1MMM V1-**T4**-140
1MMP. V1-**T4**-138
1MMR. V1-**T4**-140
1MMS. V1-**T4**-139
1MMW V1-**T4**-138, V1-**T4**-141
1MM3 . . . . . V1-**T4**-120, V1-**T4**-121
1MM4 . . . . . V1-**T4**-120, V1-**T4**-121
1MM5 . . . . . V1-**T4**-120, V1-**T4**-121, V1-**T4**-138
1MM6 . . . . . V1-**T4**-120, V1-**T4**-121
1MPL. V1-**T4**-94
1MPS V1-**T4**-92–V1-**T4**-94
1MP2. . . . . V1-**T4**-92, V1-**T4**-93
1MP3. . . . . V1-**T4**-92, V1-**T4**-93
1MP4. . . . . V1-**T4**-92, V1-**T4**-93
1MP5. . . . . V1-**T4**-92, V1-**T4**-93
1MP6. . . . . V1-**T4**-92, V1-**T4**-93
1MTB V1-**T4**-103
1UGP. V1-**T4**-107
1003 . . . . . V1-**T4**-5, V1-**T4**-6
1004 . . . . . V1-**T4**-5, V1-**T4**-6, V1-**T4**-13, V1-**T4**-20, V1-**T4**-21, V1-**T4**-26
1005 . . . . . V1-**T4**-6
1006 . . . . . V1-**T4**-6, V1-**T4**-13, V1-**T4**-20, V1-**T4**-28
1007 . . . . . V1-**T4**-5, V1-**T4**-13, V1-**T4**-15, V1-**T4**-20, V1-**T4**-26
1008 . . . . . V1-**T4**-5, V1-**T4**-6, V1-**T4**-13, V1-**T4**-15, V1-**T4**-20, V1-**T4**-21, V1-**T4**-26, V1-**T4**-28
1009 . . . . . V1-**T4**-5–V1-**T4**-7, V1-**T4**-13–V1-**T4**-15, V1-**T4**-20, V1-**T4**-21, V1-**T4**-28
1010 . . . . . V1-**T4**-12
1208 . . . . . V1-**T2**-8
1210 . . . . . V1-**T2**-8
1212. . . . . V1-**T1**-91
1224. . . . . V1-**T1**-50, V1-**T1**-91
1624. . . . . V1-**T1**-91
17NE V1-**T1**-92
1836. . . . . V1-**T1**-91
20NE V1-**T1**-92
2024. . . . . V1-**T1**-91
24IN V1-**T1**-91
24NE V1-**T1**-92
2424. . . . . V1-**T1**-91
2442. . . . . V1-**T1**-91
2460. . . . . V1-**T1**-21
3BPS V1-**T4**-108
3BR V1-**T1**-54–V1-**T1**-56, V1-**T1**-61
3B42 . . . . . V1-**T1**-54
3HM. V1-**T4**-109
3MC. V1-**T4**-109
3MCB. V1-**T4**-104, V1-**T4**-105, V1-**T4**-109
3MF V1-**T4**-109
3MFS. V1-**T4**-106, V1-**T4**-107, V1-**T4**-109
3MHC V1-**T4**-104, V1-**T4**-105
3MM V1-**T4**-115, V1-**T4**-138, V1-**T4**-139
3MMB V1-**T4**-138
3MME V1-**T4**-139, V1-**T4**-141
3MM2 . . . . . V1-**T4**-120–V1-**T4**-123
3MM3 . . . . . V1-**T4**-120–V1-**T4**-123
3MM4 . . . . . V1-**T4**-120–V1-**T4**-123, V1-**T4**-128
3MM5 . . . . . V1-**T4**-120–V1-**T4**-123, V1-**T4**-128
3MM6 . . . . . V1-**T4**-120–V1-**T4**-123
3MTB. V1-**T4**-103
3UGP. V1-**T4**-107
304. . . . . V1-**T1**-91
3424. . . . . V1-**T1**-55
35MM V1-**T4**-131
35NE V1-**T1**-92
35SS V1-**T4**-133
37M V1-**T4**-141
37MM V1-**T4**-132, V1-**T4**-141, V1-**T4**-142
37SS V1-**T4**-133
4242. . . . . V1-**T1**-50, V1-**T1**-91
47. . . . . V1-**T4**-140, V1-**T4**-142
48IN V1-**T1**-91
49. . . . . V1-**T4**-140, V1-**T4**-142
5250. . . . . V1-**T2**-8
5262. . . . . V1-**T2**-8
5362. . . . . V1-**T2**-8
612I V1-**T1**-91
7821. . . . . V1-**T4**-13
7866. . . . . V1-**T4**-5
816I V1-**T1**-91

A

Access Panel
- Marina Power and Lighting Equipment/RV Park Hook-Ups
  - Accessories V1-**T5**-77

Accessories
- Classified Circuit Breakers
  - Loadcenters and Circuit Breakers V1-**T1**-99
- Manual Transfer Switches
  - Flush Flange Kit V1-**T3**-18
  - Power Inlet Box V1-**T3**-18
- Marina Power and Lighting Equipment/RV Park Hook-Ups
  - Access Panel V1-**T5**-77
  - Breaker Plate V1-**T5**-75
  - Bus Bar Assembly V1-**T5**-76, V1-**T5**-77
  - Circuit Breakers V1-**T5**-75
  - Cover Set V1-**T5**-75
  - Digital Electronic Meters V1-**T5**-76
  - Door Hasp V1-**T5**-77
  - External Cover V1-**T5**-76
  - Faceplate V1-**T5**-75–V1-**T5**-77
  - Fire Extinguisher. V1-**T5**-77
  - Fluorescent Light Assembly. V1-**T5**-75
  - Fuse Holder V1-**T5**-76
  - Hose and Cable Brackets V1-**T5**-75
  - Isolation Plate. V1-**T5**-75
  - Lens V1-**T5**-77
  - Life Ring V1-**T5**-77
  - Light and Lens Assembly. V1-**T5**-75
  - Light Fuse. V1-**T5**-76, V1-**T5**-77
  - Light Holder V1-**T5**-77
  - Main Door. V1-**T5**-75, V1-**T5**-77
  - Main Housing V1-**T5**-75–V1-**T5**-77
  - Mounting Brackets. V1-**T5**-77
  - Mounting Feet V1-**T5**-76
  - Phone, Cable, Internet Assemblies V1-**T5**-76
  - Receptacles V1-**T5**-75
  - Spring Closure V1-**T5**-75
  - Strobe Light V1-**T5**-77
  - Water Assemblies V1-**T5**-76
- Metering Products
  - Group Metering Inline Current Transformer Cabinets Accessories, Group Metering V1-**T4**-117
  - House Panel Accessories. V1-**T4**-77
  - Meter Socket Accessories V1-**T4**-30
  - Metering Stack Accessories, Group Metering . V1-**T4**-138, V1-**T4**-139, V1-**T4**-141
  - West Coast All-In-One Design Accessories, Meter Breakers . V1-**T4**-60
- Mobile Home Panels. V1-**T5**-23
  - Direct Feed Kit V1-**T5**-23
  - Padmount Adapter V1-**T5**-23
  - Pedestal Extension. V1-**T5**-23
- Surge Protection Devices and Lightning Arresters
  - 3-Pack. V1-**T2**-6
  - Flushmount Kit V1-**T2**-6
  - Outdoor Communication Grounding Device V1-**T2**-6
  - Quick Connect Design V1-**T2**-6
  - Raintight Enclosure V1-**T2**-6
- Temporary Power/RV Park
  - Cable TV and Telephone Bracket V1-**T5**-7
  - Fluorescent Light Kit. V1-**T5**-7
  - Pad-Mount Bracket V1-**T5**-7
  - Pedestal Extension V1-**T5**-7
  - Rainproof Conduit Hub V1-**T5**-7
  - Renewal Parts. V1-**T5**-8
- Type BR Loadcenters and Circuit Breakers V1-**T1**-61
  - Alarm Contacts V1-**T1**-86
  - Auxiliary Contact V1-**T1**-86
  - Field Installation and Parts V1-**T1**-61
  - Filler Plates V1-**T1**-61
  - Ground Bar Kits. V1-**T1**-66, V1-**T1**-93
  - Handle Lockoffs V1-**T1**-85
  - Handle Ties V1-**T1**-85
  - Hold-Down Kits. V1-**T1**-85
  - Main and Sub-Feed Lug Blocks V1-**T1**-61
  - Main Breaker Lug Kits. V1-**T1**-85
  - Main Lugs V1-**T1**-61
  - Mechanical Interlock Covers. V1-**T1**-64
  - Mechanical Interlocks V1-**T1**-86
  - Padlock Brackets. V1-**T1**-86
  - Rainproof Conduit Hubs V1-**T1**-66
  - Shunt Trip V1-**T1**-86
- Type CH Loadcenters and Circuit Breakers V1-**T1**-22
  - Decorator Cover V1-**T1**-26
  - Field Installation and Parts V1-**T1**-22
  - Goof Collars V1-**T1**-26
  - Ground Bar Kits. V1-**T1**-25
  - Handle Lockdogs V1-**T1**-38
  - Handle Lockoffs V1-**T1**-38
  - Handle Ties V1-**T1**-38
  - Hold-Down Kits. V1-**T1**-38
  - Main Breaker Lug Kits. V1-**T1**-38
  - Mechanical Interlock Covers. V1-**T1**-23
  - Mechanical Interlocks V1-**T1**-23, V1-**T1**-38
  - Mounting Bases V1-**T1**-38
  - Neutral Bar Accessories V1-**T1**-25
  - Phase Adapters. V1-**T1**-25
  - Rainproof Conduit Hubs V1-**T1**-25
  - Shunt Trip V1-**T1**-39

Admiral—SS
- Marina Power and Lighting Equipment
  - Power Pedestals. V1-**T5**-62

Air Conditioning Disconnects. V1-**T6**-1–V1-**T6**-10
- Cross-Reference V1-**T6**-6
- Ground Fault Receptacle V1-**T6**-5
- Molded Case Switch V1-**T6**-2, V1-**T6**-4
- Pullouts
  - Fused V1-**T6**-2, V1-**T6**-4
  - Non-Fused. V1-**T6**-2, V1-**T6**-4

Air Cooled Generators
- Standby Generator. V1-**T3**-3

Air Cooled Standby
- Standby Generator System V1-**T3**-2

Alarm Contacts
- Type BR Loadcenters and Circuit Breakers
  - Accessories. V1-**T1**-86

Aluminum Meter Breakers
- Metering Products
  - Meter Breakers. V1-**T4**-87

ATS Kit
Automatic Transfer Switches V1-**T3**-14

ATS Ready LC with factory-installed ATS kit
Automatic Transfer Switches V1-**T3**-14

ATS Ready Loadcenter
Automatic Transfer Switches V1-**T3**-14

Automatic Transfer Switches V1-**T3**-11–V1-**T3**-15
ATS Ready LC with factory-installed ATS kit. V1-**T3**-14
ATS Ready Loadcenter V1-**T3**-14
ATS Kit V1-**T3**-14
Eaton's Green Line V1-**T3**-11
Fully Automatic Transfer Switches V1-**T3**-11

Auxiliary Contact
Type BR Loadcenters and Circuit Breakers
Accessories V1-**T1**-86

B

BR Circuit Breakers
BR Specialty Products
Type BR
Loadcenters and Circuit Breakers V1-**T1**-76

BR Quick Connect Neutral Loadcenters
BR Specialty Products
Type BR
Loadcenters and Circuit Breakers V1-**T1**-57

Breaker Plate
Marina Power and Lighting Equipment/RV Park Hook-Ups
Accessories V1-**T5**-75

Bus Bar Assembly
Marina Power and Lighting Equipment/RV Park Hook-Ups
Accessories V1-**T5**-76, V1-**T5**-77

C

Cable TV and Telephone Bracket
Temporary Power/RV Park
Accessories V1-**T5**-7

CH Circuit Breakers
Type CH
Loadcenters and Circuit Breakers V1-**T1**-31

CH Specialty Products
Non-Metallic Loadcenter. V1-**T1**-21

CH Style Renovation Solutions
Metering Products
Meter Breakers V1-**T4**-86

Circuit Breakers
Marina Power and Lighting Equipment/RV Park Hook-Ups
Accessories V1-**T5**-75

Classified Circuit Breakers
Loadcenters and Circuit Breakers V1-**T1**-96–V1-**T1**-100
Accessories V1-**T1**-99
Type CH Replacement Breakers V1-**T1**-97

Commercial Lever Bypass Sockets
Metering Products V1-**T4**-10–V1-**T4**-17

Commercial Meter Stack Modules
Group Metering
Metering Products V1-**T4**-129

Commercial Safety Sockets
Meter Breakers
Metering Products V1-**T4**-83

Common Trip Quadplex Breakers
Type BR
Loadcenters and Circuit Breakers. V1-**T1**-83

Communications Grounding Device
Metering Products. V1-**T4**-35, V1-**T4**-36

Convertible Loadcenters MCB
Type BR
Loadcenters and Circuit Breakers. V1-**T1**-51
Type CH
Loadcenters and Circuit Breakers. V1-**T1**-11

Convertible Loadcenters MLO
Type BR
Loadcenters and Circuit Breakers. V1-**T1**-51
Type CH
Loadcenters and Circuit Breakers. V1-**T1**-11

Cover Set
Marina Power and Lighting Equipment/RV Park Hook-Ups
Accessories. V1-**T5**-75

Cross-Reference
Metering Products. V1-**T4**-31

D

Decorator Cover
Type CH Loadcenters and Circuit Breakers
Accessories. V1-**T1**-26

Digital Electronic Kilowatthour Meters
Marina Power and Lighting Equipment
Power Pedestals. V1-**T5**-81
RV Park Hook-Ups
Power Pedestals. V1-**T5**-44

Digital Electronic Meters
Marina Power and Lighting Equipment/RV Park Hook-Ups
Accessories. V1-**T5**-76

Direct Feed Kit
Mobile Home Panels
Accessories. V1-**T5**-23

Distribution Equipment—Ground Fault Monitor
Marina Power and Lighting Equipment
Power Pedestals. V1-**T5**-82

Distribution Equipment—MegaYacht Powerpoint
Marina Power and Lighting Equipment
Power Pedestals. V1-**T5**-83

Distribution Equipment—Panels
Marina Power and Lighting Equipment
Power Pedestals. V1-**T5**-89
Power Pedestals
RV Park Hook-Ups. V1-**T5**-49

Distribution Equipment—Substations
Marina Power and Lighting Equipment
Power Pedestals. V1-**T5**-86

Distribution Equipment—Transformers
Marina Power and Lighting Equipment
Power Pedestals. V1-**T5**-90

Distribution—Ground Fault Monitor
RV Park Hook-Ups
Power Pedestals V1-**T5**-45

Distribution—Substations
RV Park Hook-Ups
Power Pedestals V1-**T5**-46

Distribution—Transformers
RV Park Hook-Ups
Power Pedestals V1-**T5**-50

Door Hasp
Marina Power and Lighting Equipment/RV Park Hook-Ups
Accessories V1-**T5**-77

E

Eaton Terms & Conditions V1-**T1**-1
Freight V1-**T1**-3
Limitation of Liability V1-**T1**-5
Terms and Conditions of Sale V1-**T1**-1
Terms of Payment V1-**T1**-2
Warranty V1-**T1**-3

Eaton's Green Line
Automatic Transfer Switches V1-**T3**-11

Emergency Generator Panels
Manual Transfer Switches V1-**T3**-16–V1-**T3**-18

Emergency Power Panels
Manual Transfer Switches V1-**T3**-16

Enclosed Breakers
Loadcenters and Circuit Breakers V1-**T1**-94–V1-**T1**-95

EUSERC Requirements Service Entrance Devices
Meter Breakers
Metering Products V1-**T4**-48

External Cover
Marina Power and Lighting Equipment/RV Park Hook-Ups
Accessories V1-**T5**-76

F

Faceplate
Marina Power and Lighting Equipment/RV Park Hook-Ups
Accessories V1-**T5**-75–V1-**T5**-77

Factory-Installed Surge Protection
Surge Protection Devices and Lightning Arresters . V1-**T2**-2, V1-**T2**-9

Field Installation and Parts
Type BR Loadcenters and Circuit Breakers
Accessories V1-**T1**-61
Type CH Loadcenters and Circuit Breakers
Accessories V1-**T1**-22

Filler Plates
Type BR Loadcenters and Circuit Breakers
Accessories V1-**T1**-61

Fire Extinguisher
Marina Power and Lighting Equipment/RV Park Hook-Ups
Accessories V1-**T5**-77

Firehouse
Marina Power and Lighting Equipment
Power Pedestals V1-**T5**-73
RV Park Hook-Ups
Power Pedestals V1-**T5**-42

Fluorescent Light Assembly
Marina Power and Lighting Equipment/RV Park Hook-Ups
Accessories V1-**T5**-75

Fluorescent Light Kit
Temporary Power/RV Park
Accessories V1-**T5**-7

Flush Flange Kit
Manual Transfer Switches V1-**T3**-18

Flushmount Kit
Surge Protection Devices and Lightning Arresters V1-**T2**-6

Fully Automatic Transfer Switches
Automatic Transfer Switches V1-**T3**-11

Fuse Holder
Marina Power and Lighting Equipment/RV Park Hook-Ups
Accessories V1-**T5**-76

Fused, Unfused and Molded Case Switch
Air Conditioning Disconnects V1-**T6**-2–V1-**T6**-10

G

Goof Collars
Type CH Loadcenters and Circuit Breakers
Accessories V1-**T1**-26

Ground Bar Kits
Type BR Loadcenters and Circuit Breakers
Accessories V1-**T1**-66, V1-**T1**-93
Type CH Loadcenters and Circuit Breakers
Accessories V1-**T1**-25

Ground Fault Receptacle
Air Conditioning Disconnects V1-**T6**-5

Group Metering
Metering Products V1-**T4**-88–V1-**T4**-149
Accessories V1-**T4**-138, V1-**T4**-141
Commercial Meter Stack Modules V1-**T4**-129
Main Service Modules V1-**T4**-101
Main Tenant Circuit Breaker . V1-**T4**-96, V1-**T4**-98, V1-**T4**-127, V1-**T4**-136
Meter Packs V1-**T4**-90
Phase Balanced Stack V1-**T4**-128
Renewal Parts V1-**T4**-140, V1-**T4**-142
Residential and Commercial Applications V1-**T4**-88
Residential Meter Stacks V1-**T4**-118
Surge Metering V1-**T4**-115
Type CCV Tenant Main Circuit Breaker V1-**T4**-95

Group Metering Inline Current Transformer Cabinets
Group Metering
Metering Products V1-**T4**-116

H

Handle Lockdogs
Type CH Loadcenters and Circuit Breakers
Accessories V1-**T1**-38

Handle Lockoffs
Type BR Loadcenters and Circuit Breakers
Accessories V1-**T1**-85

Type CH Loadcenters and Circuit Breakers
Accessories V1-**T1**-38

Handle Ties
Accessories
Type CH Loadcenters and Circuit Breakers V1-**T1**-38
Type BR Loadcenters and Circuit Breakers
Accessories V1-**T1**-85

Hatteras Light
Marina Power and Lighting Equipment
Power Pedestals V1-**T5**-69

Hold-Down Kits
Type BR Loadcenters and Circuit Breakers
Accessories V1-**T1**-85

Hose and Cable Brackets
Marina Power and Lighting Equipment/RV Park Hook-Ups
Accessories V1-**T5**-75

House Panels
Meter Breakers
Accessories V1-**T4**-77
Metering Products V1-**T4**-75

I

Instrument Rated Sockets
Metering Products V1-**T4**-25, V1-**T4**-26

Isolation Plate
Marina Power and Lighting Equipment/RV Park Hook-Ups
Accessories V1-**T5**-75

L

Lens
Marina Power and Lighting Equipment/RV Park Hook-Ups
Accessories V1-**T5**-77

Life Ring
Marina Power and Lighting Equipment/RV Park Hook-Ups
Accessories V1-**T5**-77

Light and Lens Assembly
Marina Power and Lighting Equipment/RV Park Hook-Ups
Accessories V1-**T5**-75

Light Fuse
Marina Power and Lighting Equipment/RV Park Hook-Ups
Accessories V1-**T5**-76, V1-**T5**-77

Light Holder
Marina Power and Lighting Equipment/RV Park Hook-Ups
Accessories V1-**T5**-77

Lighthouse
Marina Power and Lighting Equipment
Power Pedestals V1-**T5**-54

Lighthouse—SS
Marina Power and Lighting Equipment
Power Pedestals V1-**T5**-58

Liquid Cooled Generator
Standby Generator V1-**T3**-4

Liquid Cooled Standby
Standby Generator System V1-**T3**-2

Loadcenter Interiors/OEM Loadcenters
Loadcenters and Circuit Breakers V1-**T1**-89–V1-**T1**-93

Loadcenters and Circuit Breakers . V1-**T1**-1–V1-**T1**-95, V1-**T1**-97–V1-**T1**-100
Classified Circuit Breakers V1-**T1**-96–V1-**T1**-100
Accessories V1-**T1**-99
Type CH Replacement Breakers V1-**T1**-97
Enclosed Breakers V1-**T1**-94–V1-**T1**-95
Loadcenter Interiors/OEM Loadcenters . . . V1-**T1**-89–V1-**T1**-93
Type BR V1-**T1**-42–V1-**T1**-70
Accessories V1-**T1**-61
BR Specialty Products
BR Circuit Breakers V1-**T1**-76
BR Quick Connect Neutral Loadcenters V1-**T1**-57
Riser Panel V1-**T1**-59
Spa Panels V1-**T1**-58
Type BR Renovation Loadcenter V1-**T1**-60
Type BR Retrofit Interior Kits V1-**T1**-73
Common Trip Quadplex Breakers V1-**T1**-83
Convertible Loadcenters MCB V1-**T1**-51
Convertible Loadcenters MLO V1-**T1**-51
Plug-On Circuit Breakers V1-**T1**-76
Quick-Pro V1-**T1**-60
Single-Phase V1-**T1**-48
Three-Phase V1-**T1**-54
Type CH V1-**T1**-2–V1-**T1**-28
Accessories V1-**T1**-22
CH Circuit Breakers V1-**T1**-31
CH Specialty Products
Non-Metallic Loadcenter V1-**T1**-21
Plug-On Neutral Loadcenter V1-**T1**-17
Spa Panels V1-**T1**-14
Surge Panel V1-**T1**-15
Type CH Renovation Loadcenter V1-**T1**-18
Type CH Retrofit Interior Kits V1-**T1**-19
Convertible Loadcenters MCB V1-**T1**-11
Convertible Loadcenters MLO V1-**T1**-11
Single-Phase V1-**T1**-7
Three-Phase V1-**T1**-12

M

Main and Sub-Feed Lug Blocks
Type BR Loadcenters and Circuit Breakers
Accessories V1-**T1**-61

Main Breaker Lug Kits
Type BR Loadcenters and Circuit Breakers
Accessories V1-**T1**-85
Type CH Loadcenters and Circuit Breakers
Accessories V1-**T1**-38

Main Door
Marina Power and Lighting Equipment/RV Park Hook-Ups
Accessories V1-**T5**-75, V1-**T5**-77

Main Housing
Marina Power and Lighting Equipment/RV Park Hook-Ups
Accessories V1-**T5**-75–V1-**T5**-77

Main Lugs
Type BR Loadcenters and Circuit Breakers
Accessories V1-**T1**-61

Main Service Modules
Group Metering
Metering Products V1-**T4**-101

Main Tenant Circuit Breaker
Group Metering
Metering Products V1-**T4**-96, V1-**T4**-98, V1-**T4**-127, V1-**T4**-136

Manual Transfer Switches V1-**T3**-16–V1-**T3**-19
Emergency Generator Panels V1-**T3**-16
Emergency Power Panels V1-**T3**-16
Generator Panels V1-**T3**-18
Indoor and Outdoor Designs V1-**T3**-17
Indoor and Outdoor Designs V1-**T3**-16
Standard Manual Transfer Switch V1-**T3**-18
Switched Neutral Manual Transfer Switch V1-**T3**-18

Marina Power and Lighting Equipment
Power Pedestals V1-**T5**-2, V1-**T5**-51–V1-**T5**-90
Admiral—SS V1-**T5**-62
Digital Electronic Kilowatthour Meters V1-**T5**-81
Distribution Equipment—Ground Fault Monitor V1-**T5**-82
Distribution Equipment—MegaYacht Powerpoint . . V1-**T5**-83
Distribution Equipment—Panels V1-**T5**-89
Distribution Equipment—Substations V1-**T5**-86
Distribution Equipment—Transformers V1-**T5**-90
Firehouse V1-**T5**-73
Hatteras Light V1-**T5**-69
Lighthouse V1-**T5**-54
Lighthouse—SS V1-**T5**-58
Mariner V1-**T5**-80
Newport Harbor Mate V1-**T5**-65
Smart Start V1-**T5**-79

Marina Power and Lighting Equipment/RV Park Hook-Ups
Power Pedestals
Accessories V1-**T5**-75

Mariner
Marina Power and Lighting Equipment
Power Pedestals V1-**T5**-80

Mechanical Interlock Cover
Metering Products
Meter Breakers V1-**T4**-65

Mechanical Interlock Covers
Type BR Loadcenters and Circuit Breakers
Accessories V1-**T1**-64
Type CH Loadcenters and Circuit Breakers
Accessories V1-**T1**-23

Mechanical Interlocks
Type BR Loadcenters and Circuit Breakers
Accessories V1-**T1**-86
Type CH Loadcenters and Circuit Breakers
Accessories V1-**T1**-23, V1-**T1**-38

Mechanical Lugs
Metering Products V1-**T4**-34

Meter Breakers
Metering Products V1-**T4**-37–V1-**T4**-87
Accessories V1-**T4**-77
Aluminum Meter Breakers V1-**T4**-87
CH Style Renovation Solutions V1-**T4**-86
Commercial Safety Sockets V1-**T4**-83
EUSERC Requirements Service Entrance Devices . V1-**T4**-48
House Panels V1-**T4**-75
Mechanical Interlock Cover V1-**T4**-65
Non-EUSERC Combination Service Entrance Devices . V1-**T4**-39
Residential Meter Breakers V1-**T4**-37
West Coast All-In-One Design V1-**T4**-59

Meter Packs
Group Metering
Metering Products V1-**T4**-90

Metering Products V1-**T4**-1–V1-**T4**-149
Commercial Lever Bypass Sockets V1-**T4**-10–V1-**T4**-17
Communications Grounding Device V1-**T4**-35, V1-**T4**-36
Cross-Reference V1-**T4**-31
Group Metering V1-**T4**-88–V1-**T4**-149
Accessories. . . V1-**T4**-117, V1-**T4**-138, V1-**T4**-139, V1-**T4**-141
Commercial Meter Stack Modules V1-**T4**-129
Group Metering Inline Current Transformer Cabinets . V1-**T4**-116
Main Service Modules V1-**T4**-101
Main Tenant Circuit Breaker . V1-**T4**-96, V1-**T4**-98, V1-**T4**-127, V1-**T4**-136
Meter Packs V1-**T4**-90
Phase Balanced Stack V1-**T4**-128
Renewal Parts V1-**T4**-140, V1-**T4**-142
Residential and Commercial Applications V1-**T4**-88
Residential Meter Stacks V1-**T4**-118
Surge Metering V1-**T4**-115
Type CCV Tenant Main Circuit Breaker V1-**T4**-95
Instrument Rated Sockets V1-**T4**-25, V1-**T4**-26
Mechanical Lugs V1-**T4**-34
Meter Breakers V1-**T4**-37–V1-**T4**-87
Accessories V1-**T4**-77
Aluminum Meter Breakers V1-**T4**-87
CH Style Renovation Solutions V1-**T4**-86
Commercial Safety Sockets V1-**T4**-83
EUSERC Requirements Service Entrance Devices . . V1-**T4**-48
House Panels V1-**T4**-75
Mechanical Interlock Cover V1-**T4**-65
Non-EUSERC Combination Service Entrance Devices . V1-**T4**-39
Residential Meter Breakers V1-**T4**-37
West Coast All-In-One Design V1-**T4**-59
Meter Socket Accessories
Accessories V1-**T4**-30
Multiple Position Horizontal Ganged Sockets . V1-**T4**-18–V1-**T4**-24
Residential Pedestals V1-**T4**-27, V1-**T4**-28
Single Meter Sockets V1-**T4**-2–V1-**T4**-9
Residential Ringless Type Cover V1-**T4**-4

Mobile Home Panels
Accessories
Power Pedestals V1-**T5**-23
Power Pedestals V1-**T5**-2, V1-**T5**-21–V1-**T5**-27

Molded Case Switch
Air Conditioning Disconnects V1-**T6**-2, V1-**T6**-4

Mounting Bases
Type CH Loadcenters and Circuit Breakers
Accessories V1-**T1**-38

Mounting Brackets
Marina Power and Lighting Equipment/RV Park Hook-Ups
Accessories V1-**T5**-77

Mounting Feet
Marina Power and Lighting Equipment/RV Park Hook-Ups
Accessories V1-**T5**-76

Multiple Position Horizontal Ganged Sockets
Metering Products V1-**T4**-18–V1-**T4**-24

N

Neutral Bar Accessories
Type CH Loadcenters and Circuit Breakers
Accessories V1-**T1**-25

Newport Camp Mate Power Pedestal
RV Park Hook-Ups
Power Pedestals V1-**T5**-36

Newport Harbor Mate
Marina Power and Lighting Equipment
Power Pedestals V1-**T5**-65

Non-EUSERC Combination Service Entrance Devices
Metering Products
Meter Breakers V1-**T4**-39

Non-Metallic Loadcenter
CH Specialty Products
Type CH
Loadcenters and Circuit Breakers V1-**T1**-21

O

Outdoor Communication Grounding Device
Surge Protection Devices and Lightning Arresters V1-**T2**-6

P

Padlock Brackets
Type BR Loadcenters and Circuit Breakers
Accessories V1-**T1**-86

Padmount Adapter
Mobile Home Panels
Accessories V1-**T5**-23

Pad-Mount Bracket
Temporary Power/RV Park
Accessories V1-**T5**-7

Park Light Power Pedestal
RV Park Hook-Ups
Power Pedestals V1-**T5**-39

Pedestal Extension
Mobile Home Panels
Accessories V1-**T5**-23
Temporary Power/RV Park
Accessories V1-**T5**-7

Pedestal Units
Temporary Power/RV Park
Power Pedestals V1-**T5**-16

Phase Adapters
Type CH Loadcenters and Circuit Breakers
Accessories V1-**T1**-25

Phase Balanced Stack
Group Metering
Metering Products V1-**T4**-128

Phone, Cable, Internet Assemblies
Marina Power and Lighting Equipment/RV Park Hook-Ups
Accessories. V1-**T5**-76

Plug-On Circuit Breakers
Type BR
Loadcenters and Circuit Breakers V1-**T1**-76

Plug-On Neutral Loadcenter
CH Specialty Products
Type CH
Loadcenters and Circuit Breakers V1-**T1**-17

Plug-On Surge Protection
Surge Protection Devices and Lightning Arrester V1-**T2**-3

Portable Generators
Residential Standby Backup Power Solutions V1-**T3**-7–V1-**T3**-10

Power Inlet Box
Manual Transfer Switches V1-**T3**-18

Power Outlet Panels
Power Pedestals V1-**T5**-2

Power Pedestals V1-**T5**-1–V1-**T5**-90
Marina Power and Lighting Equipment . V1-**T5**-2, V1-**T5**-51–V1-**T5**-90
Admiral—SS V1-**T5**-62
Digital Electronic Kilowatthour Meters V1-**T5**-81
Distribution Equipment—Ground Fault Monitor V1-**T5**-82
Distribution Equipment—MegaYacht Powerpoint . . V1-**T5**-83
Distribution Equipment—Panels V1-**T5**-89
Distribution Equipment—Substations. V1-**T5**-86
Distribution Equipment—Transformers V1-**T5**-90
Firehouse V1-**T5**-73
Hatteras Light V1-**T5**-69
Lighthouse V1-**T5**-54
Lighthouse—SS V1-**T5**-58
Mariner V1-**T5**-80
Newport Harbor Mate. V1-**T5**-65
Smart Start V1-**T5**-79
Marina Power and Lighting Equipment/RV Park Hook-Ups
Accessories. V1-**T5**-75
Mobile Home Panels V1-**T5**-2, V1-**T5**-21–V1-**T5**-27
Accessories. V1-**T5**-23
Power Outlet Panels V1-**T5**-2
RV Park Hook-Ups V1-**T5**-28–V1-**T5**-50
Digital Electronic Kilowatthour Meters V1-**T5**-44
Distribution Equipment—Panels V1-**T5**-49
Distribution—Ground Fault Monitor V1-**T5**-45
Distribution—Substations V1-**T5**-46
Distribution—Transformers. V1-**T5**-50
Firehouse V1-**T5**-42
Newport Camp Mate Power Pedestal V1-**T5**-36
Park Light Power Pedestal V1-**T5**-39
Powerhouse Power Pedestal V1-**T5**-30
Powerhouse Stainless Steel Power Pedestal. V1-**T5**-33
Temporary Power/RV Park. V1-**T5**-3–V1-**T5**-20
Accessories. V1-**T5**-7
Pedestal Units. V1-**T5**-16
Surface Units V1-**T5**-10

Powerhouse Power Pedestal
RV Park Hook-Ups
Power Pedestals V1-**T5**-30

Powerhouse Stainless Steel Power Pedestal
RV Park Hook-Ups
Power Pedestals V1-**T5**-33

Pullouts, Fused and Non-Fused
Air Conditioning Disconnects V1-**T6**-2, V1-**T6**-4

Q

Quick Connect Design
Surge Protection Devices and Lightning Arresters V1-**T2**-6

Quick-Pro
Type BR
Loadcenters and Circuit Breakers V1-**T1**-60

R

Rainproof Conduit Hub
Temporary Power/RV Park
Accessories V1-**T5**-7

Rainproof Conduit Hubs
Type BR Loadcenters and Circuit Breakers
Accessories V1-**T1**-66
Type CH Loadcenters and Circuit Breakers
Accessories V1-**T1**-25

Raintight Enclosure
Surge Protection Devices and Lightning Arresters V1-**T2**-6

Receptacles
Marina Power and Lighting Equipment/RV Park Hook-Ups
Accessories V1-**T5**-75

Renewal Parts
Group Metering
Metering Products V1-**T4**-140, V1-**T4**-142
Temporary Power/RV Park
Accessories V1-**T5**-8

Residential and Commercial Applications
Group Metering
Metering Products V1-**T4**-88

Residential Meter Breakers
Meter Breakers
Metering Products V1-**T4**-37

Residential Meter Stacks
Group Metering
Metering Products V1-**T4**-118

Residential Pedestals
Metering Products V1-**T4**-27, V1-**T4**-28

Residential Ringless Type Cover
Single Meter Sockets
Metering Products V1-**T4**-4

Residential Standby Backup Power Solutions. . . . V1-**T3**-1–V1-**T3**-15
Automatic Transfer Switches V1-**T3**-11–V1-**T3**-15
Manual Transfer Switches V1-**T3**-16–V1-**T3**-19
Portable Generators V1-**T3**-7–V1-**T3**-10
Standby Generator V1-**T3**-2–V1-**T3**-6

Riser Panel
BR Specialty Products
Type BR
Loadcenters and Circuit Breakers V1-**T1**-59

RV Park Hook-Ups
Power Pedestals V1-**T5**-28–V1-**T5**-50
Digital Electronic Kilowatthour Meters V1-**T5**-44
Distribution Equipment—Panels. V1-**T5**-49
Distribution—Ground Fault Monitor V1-**T5**-45
Distribution—Substations V1-**T5**-46
Distribution—Transformers. V1-**T5**-50
Firehouse V1-**T5**-42
Newport Camp Mate Power Pedestal V1-**T5**-36
Park Light Power Pedestal V1-**T5**-39
Powerhouse Power Pedestal V1-**T5**-30
Powerhouse Stainless Steel Power Pedestal. V1-**T5**-33

S

Safety Sockets, Commercial
Meter Breakers
Metering Products V1-**T4**-83

Service Entrance Surge Protection
Surge Protection Devices and Lightning Arresters V1-**T2**-2

Shunt Trip
Type BR Loadcenters and Circuit Breakers
Accessories. V1-**T1**-86
Type CH Loadcenters and Circuit Breakers
Accessories. V1-**T1**-39

Single Meter Sockets
Metering Products. V1-**T4**-2–V1-**T4**-9
Residential Ringless Type Cover. V1-**T4**-4

Single-Phase
Type BR
Loadcenters and Circuit Breakers. V1-**T1**-48
Type CH
Loadcenters and Circuit Breakers. V1-**T1**-7

Smart Start
Marina Power and Lighting Equipment
Power Pedestals. V1-**T5**-79

Spa Panels
BR Specialty Products
Type BR
Loadcenters and Circuit Breakers V1-**T1**-58
CH Specialty Products
Type CH
Loadcenters and Circuit Breakers V1-**T1**-14
Type BR. V1-**T1**-58

Spring Closure
Marina Power and Lighting Equipment/RV Park Hook-Ups
Accessories. V1-**T5**-75

Standard Manual Transfer Switch
Manual Transfer Switches. V1-**T3**-18

Standby Generator. V1-**T3**-2–V1-**T3**-6
Air Cooled Generators V1-**T3**-3
Liquid Cooled Generators V1-**T3**-4

Standby Generator System
Air Cooled Standby V1-**T3**-2
Liquid Cooled Standby. V1-**T3**-2

Strobe Light
Marina Power and Lighting Equipment/RV Park Hook-Ups
Accessories V1-**T5**-77

Surface Units
Temporary Power/RV Park
Power Pedestals V1-**T5**-10

Surge Installed Loadcenters
Surge Protection Devices and Lightning Arrester V1-**T2**-9

Surge Metering
Group Metering
Metering Products V1-**T4**-115

Surge Panel
CH Specialty Products
Type CH
Loadcenters and Circuit Breakers V1-**T1**-15

Surge Protection V1-**T2**-1–V1-**T2**-10
Factory-Installed Surge Protection V1-**T2**-2, V1-**T2**-9
Plug-On Surge Protection V1-**T2**-3
Type 3 Point-of-Use Surge Protection V1-**T2**-3
Type BRSURGE V1-**T2**-3
Type BRSURGECSA. V1-**T2**-3
Type CHQSA V1-**T2**-3
Type CHSA. V1-**T2**-3
Service Entrance V1-**T2**-2
Surge Installed Loadcenters V1-**T2**-9
Surge Protection Devices and Lightning Arresters . V1-**T2**-2–V1-**T2**-10
Surge Ready Loadcenter. V1-**T2**-2, V1-**T2**-9
Two-Stage Protection V1-**T2**-2, V1-**T2**-3
UL 1449 3rd Edition Surge Protection
Type 1. . . . . V1-**T2**-2
Type 1 CHSP V1-**T2**-4
Type 2. . . . . V1-**T2**-2
Type 2 Plug-On. V1-**T2**-10
UL 1449 3rd Edition, cUL
Type 2 CHSP Service Entrance V1-**T2**-5

Surge Protection Devices and Lightning Arresters V1-**T2**-2–V1-**T2**-10
Surge Protection Receptacles with LED Indicators and Audible Alarm V1-**T2**-8
Type BR and CH Surge Breakers V1-**T2**-7

Surge Protection Receptacles with LED Indicators and Audible Alarm
Surge Protection Devices and Lightning Arresters V1-**T2**-8

Surge Ready
Type CH
Loadcenters and Circuit Breakers V1-**T1**-16

Surge Ready Loadcenter. V1-**T2**-9
Surge Protection Devices and Lightning Arresters V1-**T2**-2

Switched Neutral Manual Transfer Switch
Manual Transfer Switches V1-**T3**-18

T

Temporary Power/RV Park
Power Pedestals V1-**T5**-3–V1-**T5**-20
Accessories V1-**T5**-7
Pedestal Units V1-**T5**-16
Surface Units V1-**T5**-10

Three-Phase
Type BR
Loadcenters and Circuit Breakers V1-**T1**-54
Type CH
Loadcenters and Circuit Breakers V1-**T1**-12

Transfer Panels
Manual Transfer Switches V1-**T3**-16

Two-Stage Protection
Surge Protection Devices and Lightning Arresters V1-**T2**-2, V1-**T2**-3

Type 1 Surge Protective Device
Surge Protection Devices and Lightning Arresters V1-**T2**-2

Type 2 Surge Protective Device
Surge Protection Devices and Lightning Arresters V1-**T2**-2

Type 3 Point-of-Use Surge Protection
Surge Protection Devices and Lightning Arresters V1-**T2**-3

Type BR
Loadcenters and Circuit Breakers V1-**T1**-42–V1-**T1**-70
Accessories. V1-**T1**-61
BR Specialty Products
BR Circuit Breakers V1-**T1**-76
BR Quick Connect Neutral Loadcenters. V1-**T1**-57
Riser Panel V1-**T1**-59
Spa Panels V1-**T1**-58
Type BR Renovation Loadcenter V1-**T1**-60
Type BR Retrofit Interior Kits V1-**T1**-73
Common Trip Quadplex Breakers. V1-**T1**-83
Convertible Loadcenters MCB V1-**T1**-51
Convertible Loadcenters MLO V1-**T1**-51
Plug-On Circuit Breakers. V1-**T1**-76
Quick-Pro V1-**T1**-60
Single-Phase V1-**T1**-48
Spa Panels V1-**T1**-58
Three-Phase V1-**T1**-54

Type BR and CH Surge Breakers
Surge Protection Devices and Lightning Arresters V1-**T2**-7

Type BR Renovation Loadcenter
BR Specialty Products
Type BR
Loadcenters and Circuit Breakers V1-**T1**-60

Type BR Retrofit Interior Kits
BR Specialty Products
Type BR
Loadcenters and Circuit Breakers V1-**T1**-73

Type BRSURGE Surge Protection
Surge Protection Devices and Lightning Arresters V1-**T2**-3

Type CCV Tenant Main Circuit Breaker
Group Metering
Metering Products V1-**T4**-95

Type CH. V1-**T1**-16
Loadcenters and Circuit Breakers V1-**T1**-2–V1-**T1**-28
Accessories. V1-**T1**-22
CH Circuit Breakers. V1-**T1**-31
CH Specialty Products
Non-Metallic Loadcenter V1-**T1**-21
Plug-On Neutral Loadcenter. V1-**T1**-17
Spa Panels V1-**T1**-14

Surge Panel V1-**T1**-15
Type CH Renovation Loadcenter V1-**T1**-18
Type CH Retrofit Interior Kits V1-**T1**-19
Convertible Loadcenters MCB V1-**T1**-11
Convertible Loadcenters MLO V1-**T1**-11
Single-Phase V1-**T1**-7
Surge Ready V1-**T1**-16
Three-Phase V1-**T1**-12

Type CH Renovation Loadcenter
CH Specialty Products
Type CH
Loadcenters and Circuit Breakers V1-**T1**-18

Type CH Replacement Breakers
Classified Circuit Breakers
Loadcenters and Circuit Breakers V1-**T1**-97

Type CH Retrofit Interior Kits
CH Specialty Products
Type CH
Loadcenters and Circuit Breakers V1-**T1**-19

Type CHQSA Surge Protection
Surge Protection Devices and Lightning Arresters V1-**T2**-3

Type CHSA Surge Protection
Surge Protection Devices and Lightning Arresters V1-**T2**-3

U

UL 1449 3rd Edition
Surge Protection Devices and Lightning Arrester V1-**T2**-2

W

Water Assemblies
Marina Power and Lighting Equipment/RV Park Hook-Ups
Accessories V1-**T5**-76

West Coast All-In-One Design
Meter Breakers
Accessories V1-**T4**-60
Metering Products V1-**T4**-59

Numerics

3-Pack
Surge Protection Devices and Lightning Arresters V1-**T2**-6

Electrical Sector Solutions

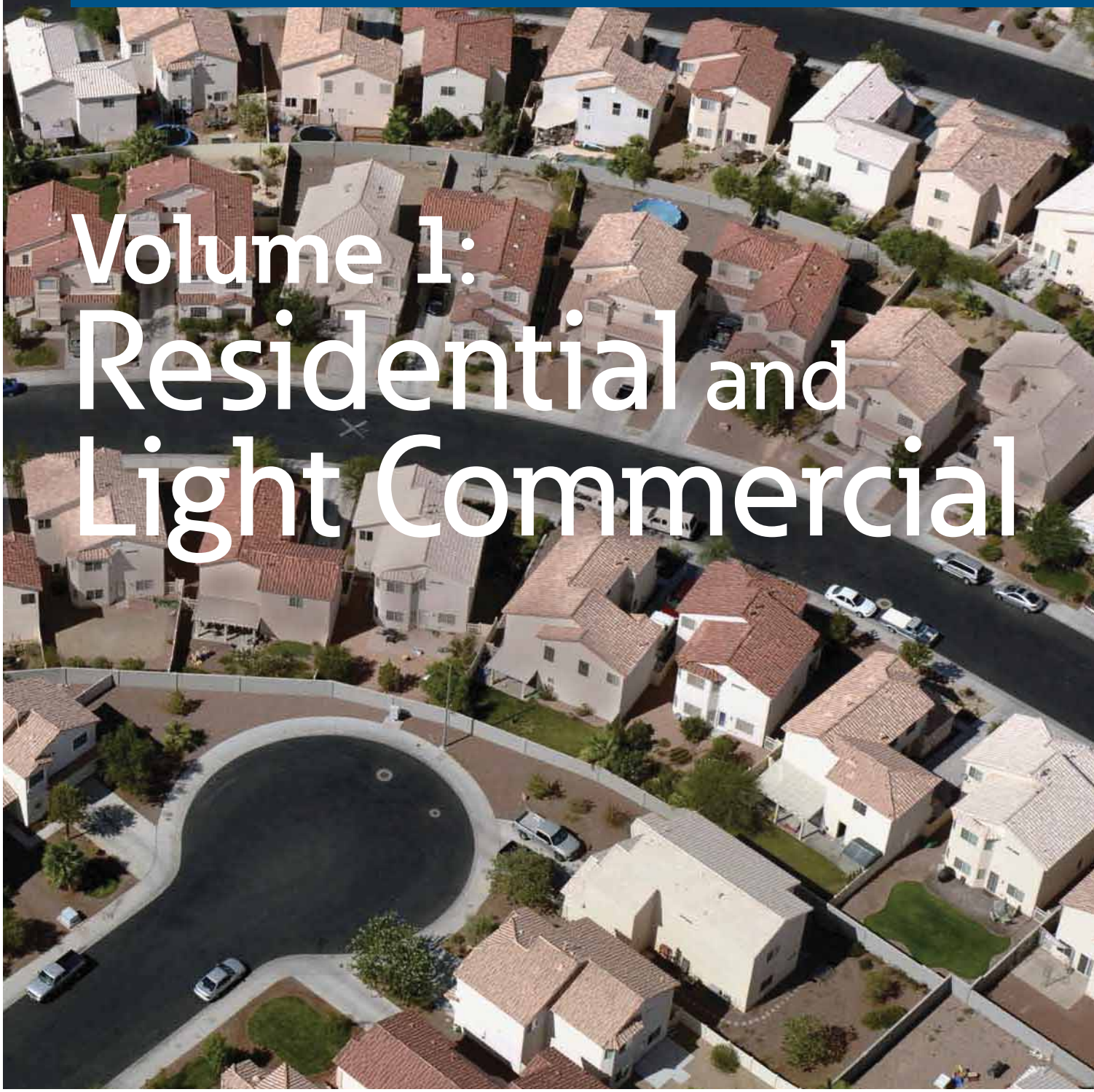

Volume 1: Residential and Light Commercial

Powering Business Worldwide

Volume 1—Residential and Light Commercial

1

Tab 1—Loadcenters and Circuit Breakers V1-T1-1

Tab 2—Surge Protection V1-T2-1

Tab 3—Residential Standby Backup Power Solutions V1-T3-1

Tab 4—Metering Products V1-T4-1

Tab 5—Power Pedestals V1-T5-1

Tab 6—Air Conditioning Disconnects V1-T6-1

Appendix 1—Eaton Terms & Conditions V1-A1-1

Appendix 2—Catalog Parent Number Index V1-A2-1

Appendix 3—Alphabetical Product Index V1-A3-1

Copyright

Dimensions, Weights and Ratings

Dimensions, weights and ratings given in this catalog **are approximate and should not be used for construction purposes**. Drawings containing exact dimensions are available upon request. All listed product specifications and ratings are subject to change without notice. Photographs are representative of production units.

Terms and Conditions

All prices and discounts are subject to change without notice. When price changes occur, they are published in Eaton's *Price and Availability Digest* (PAD). All orders accepted by Eaton's Electrical Sector are subject to the general terms and conditions as set forth in Appendix 1—Eaton Terms & Conditions.

Technical and Descriptive Publications

This catalog contains brief technical data for proper selection of products. Further information is available in the form of technical information publications and illustrated brochures. If additional product information is required, contact your local Eaton Products Distributor, call **1-800-525-2000** or visit our website at **www.eaton.com**.

Compliance with Nuclear Regulation 10 CFR 21

Eaton products are sold as commercial grade products not intended for application in facilities or activities licensed by the United States Nuclear Regulatory Commission for atomic purposes, under 10 CFR 21. Further certification will be required for use of these products in a safety-related application in any nuclear facility licensed by the U.S. Nuclear Regulatory Commission.

WARNING

The installation and use of Eaton products should be in accordance with the provisions of the U.S. National Electrical Code® and/or other local codes or industry standards that are pertinent to the particular end use. Installation or use not in accordance with these codes and standards could be hazardous to personnel and/or equipment.

These catalog pages do not purport to cover all details or variations in equipment, nor to provide for every possible contingency to be met in connection with installation, operation or maintenance. Should further information be desired or should particular problems arise which are not covered sufficiently for the purchaser's purposes, the matter should be referred to the local Eaton Products Distributor or Sales Office. The contents of this catalog shall not become part of or modify any prior or existing agreement, commitment or relationship. The sales contract contains the entire obligation of Eaton's Electrical Sector. The warranty contained in the contract between the parties is the sole warranty of Eaton. Any statements contained herein do not create new warranties or modify the existing warranty.

Copyright ©2015 Eaton, All Rights Reserved.

Powering Business Worldwide

Eaton is a global leader in power distribution, power quality, control and automation, and monitoring products.

At Eaton, we believe a reliable, efficient and safe power system is the foundation of every successful enterprise. Through innovative technologies, cutting-edge products and our highly skilled services team, we empower businesses around the world to achieve a powerful advantage.

In addition, Eaton is committed to creating and maintaining powerful customer relationships built on a foundation of excellence. From the products we manufacture to our dedicated customer service and support, we know what's important to you.

Solutions

Eaton takes the complexity out of power systems management with a holistic and strategic approach, leveraging our industry-leading technology, solutions and services. We focus on the following three areas in all we do:

- Reliability—maintain the appropriate level of power continuity without disruption or unexpected downtime
- Efficiency—minimize energy usage, operating costs, equipment footprint and environmental impact
- Safety—identify and mitigate electrical hazards to protect what you value most

Using the Eaton Catalog Library

As we grow, it becomes increasingly difficult to include all products in one or two comprehensive catalogs. Knowing that each user has their specific needs, we have created a library of catalogs for our products that when complete, will contain 15 volumes. Since the volumes will continuously be a work in progress and updated, each volume will stand alone. Refer to our volume directory, MZ08100001E, for a quick glance of where to look for the products you need. The 15 volumes include:

- Volume 1—Residential and Light Commercial (CA08100002E)
- Volume 2—Commercial Distribution (CA08100003E)
- Volume 3—Power Distribution and Control Assemblies (CA08100004E)
- Volume 4—Circuit Protection (CA08100005E)
- Volume 5—Motor Control and Protection (CA08100006E)
- Volume 6—Solid-State Motor Control (CA08100007E)
- Volume 7—Logic Control, Operator Interface and Connectivity Solutions (CA08100008E)
- Volume 8—Sensing Solutions (CA08100010E)
- Volume 9—Original Equipment Manufacturer (CA08100011E)
- Volume 10—Enclosed Control (CA08100012E)
- Volume 11—Vehicle and Commercial Controls (CA08100013E)
- Volume 12—Aftermarket, Renewal Parts and Life Extension Solutions (CA08100014E)
- Volume 13—Counters, Timers and Tachometers (CA08100015E)—Available in electronic format only
- Volume 14—Fuses (CA08100016E)—Available in electronic format only
- Volume 15—Solar Inverters and Electrical Balance of System (CA08100018E)

These volumes are not all-inclusive of every product, but they are meant to be an overview of our product lines. For our full range of product solutions and additional product information, consult Eaton.com/electrical and other catalogs and product guides in our literature library. These references include:

- The Consulting Application Guide (CA08104001E)
- The Eaton Power Quality Product Guide (COR01FYA)

If you don't have the volume that contains the product or information that you are looking for, not to worry. You can access every volume of the catalog library at Eaton.com/electrical in the Literature Library.

By installing our Automatic Tab Updater (ATU), you can be sure you always have the most recent version of each volume and tab.

Icons

Green Leaf

Eaton Green Solutions are products, systems or solutions that represent Eaton benchmarks for environmental performance. The green leaf symbol is our promise that the solution has been reviewed and documented as offering exceptional, industry-leading environmental benefits to customers, consumers and our communities. Though all of Eaton's products and solutions are designed to meet or exceed applicable government standards related to protecting the environment, our products with the Green Leaf designation further provide "exceptional environmental benefit."

Learn Online

When you see the Learn Online icon, go to Eaton.com/electrical and search for the product or training page. There you will find 100-level training courses, podcasts, webcasts or games and puzzles to learn more.

Drawings Online

When you see the Drawings Online icon, go to Eaton.com/electrical and find the products page. There you will find a tab that includes helpful product drawings and illustrations.

Contact Us

If you need additional help, you can find contact information under the Customer Care heading of Eaton.com/electrical.

Loadcenters and Circuit Breakers

Residential Loadcenters and Breaker Family

1.1 Type CH Loadcenters and Circuit Breakers

Overview V1-T1-2
Single-Phase V1-T1-7
Three-Phase V1-T1-12
CH Specialty Products V1-T1-14
Spa Panels V1-T1-14
Surge Panel V1-T1-15
Plug-On Neutral Loadcenter V1-T1-17
Type CH Renovation Loadcenter V1-T1-18
Type CH Retrofit Interior Kits V1-T1-19
Non-Metallic Loadcenter V1-T1-21
CH Circuit Breakers V1-T1-31

1.2 Type BR Loadcenters and Circuit Breakers

Overview V1-T1-42
Single-Phase V1-T1-48
Three-Phase V1-T1-54
BR Specialty Products V1-T1-57
BR Quick Connect Neutral Loadcenters V1-T1-57
Spa Panels V1-T1-58
Riser Panel V1-T1-59
Type BR Renovation Loadcenter V1-T1-60
Type BR Retrofit Interior Kits V1-T1-73
BR Circuit Breakers V1-T1-76

1.3 Loadcenter Interiors/OEM Loadcenters

Product Description V1-T1-89
Standards and Certifications V1-T1-90
Product Selection V1-T1-90

1.4 Enclosed Breakers

Product Overview V1-T1-94
Product Description V1-T1-94
Standards and Certifications V1-T1-94
Product Selection V1-T1-95
Dimensions V1-T1-95

1.5 Classified Circuit Breakers

Product Description V1-T1-96
Product Selection V1-T1-97
Accessories V1-T1-99
Technical Data V1-T1-99
Wiring Diagrams V1-T1-100

Learn Online

Eaton Type CH Convertible Family

Contents

Description	*Page*
Overview	
Product Description	**V1-T1-3**
Features, Benefits and Functions	**V1-T1-3**
Standards and Certifications	**V1-T1-4**
Catalog Number Selection	**V1-T1-6**
Product Selection	**V1-T1-7**
Technical Data and Specifications	**V1-T1-29**
CH Specialty Products	**V1-T1-14**
CH Loadcenter Options and Accessories	**V1-T1-22**
CH Circuit Breakers	**V1-T1-31**

Overview

Product Selection Guide

CH Loadcenters

Description	
Service	
Single-phase, three-wire, 120/240 Vac	Three-phase, four-wire, 208Y/120 Vac
Three-phase, three-wire, 240 V corner grounded delta	Three-phase, three-wire, 240 Vac delta
Short-Circuit Current Rating	
10 kAIC: All single- and three-phase loadcenters 40–400 A, 2–42 circuits except when series ratings are applied	35 kAIC available on convertible units using CSH main breaker
25 kAIC: All factory-installed main breakers single-phase loadcenters rated 150–225 A using Type CSR main breakers	42 and 100 kAIC are available on some styles: single-phase and three-phase
Main Breaker/Main Lug Loadcenters	
Single-phase	Three-phase
Main breaker: 100, 125, 150, 200, 225, 400 A	Main breaker: 150, 200, 225, 300, 400 A
Main lugs: 40, 70, 125, 150, 200, 225, 400 A	Main lugs: 125, 150, 200, 225, 400 A
Convertible Loadcenters	
Main breaker or main lugs: single-phase up to 225 A	
Branch Breakers	
Type CH: 10–150 A. Single-, two- and three-pole. Selected amperages available in shunt trip, HACR and switching duty	Type CH-AFCI arc fault circuit interrupter
Ground fault circuit interruptors: 15–60 A	Type CHP: 10–125 A. Single-, two- and three-pole. three-position commercial trip
Type CH-HID: 15–30 A. Single-, two- and three-pole	Selected amperages available in HACR switching duty
CH-HM high magnetic	Type CHP-HID: 15–30 A. Single-, two- and three-pole
CH-M50 high ambient	Type CHP-GFCI: 15–30 A. Single-pole ground fault breakers
Enclosures	
NEMA® Type 1 indoor	NEMA Type 3R outdoor
Loadcenter and Breaker Accessories	
Branch circuit breaker:	Complete line of ground bar kits 5, 10, 14 and 21 circuits, some with additional #2/0 lugs
Auxiliary components	Each terminal will accommodate: (3) #14–#10 Cu/Al or (1) #14–#4 Cu/Al
Hold-down kits	Sub-feed lugs 125, 150 A—two- and three-pole
Handle ties	Shunt trips
Lockoffs	Universal rainproof conduit hubs Group One: 3/4, 1, 1-1/4, 1-1/2, 2 inches (19.1, 25.4, 31.8, 38.1, 50.8 mm) Group Two: 2, 2-1/2, 3 inches (50.8, 63.5, 76.2 mm)
Lockdogs	Adapter plate
Bussing	
Silver flash plated copper bus is a standard feature	

Product Description

Loadcenters are enclosures specifically designed to house the branch circuit breakers and wiring required to distribute power to individual circuits. They contain either a main breaker when used at the service entrance point or a main lug when used as a sub-panel to add circuits to existing service. The main breaker protects the main entire panel and can be used as a service disconnect. The branch breakers protect the wires leading to individual electrical loads such as fixtures and outlets.

Features, Benefits and Functions

Loadcenter Construction

Eaton's Type CH loadcenters feature silver flash plated copper bus in all interiors. Stabs are rated 200 A throughout the CH line. Therefore, the sum of the handle ratings connected to any one stab is limited to 200 A maximum. NEMA 1 boxes are manufactured from cold rolled 16 gauge sheet steel. Raintight boxes are manufactured from galvanized steel. All boxes and trims are finished using an electrostatic powder coat, baked urethane paint process.

Neutrals

Eaton Type CH loadcenters feature two types of neutrals:

Insulated/Bondable Split Neutral

Panels are supplied with split insulated neutrals with an insulated cross strap. For service entrance applications, the neutral must be bonded by using the bonding strap supplied with the panel. For non-service entrance (sub-panel) applications, the panel may be installed with the bonding strap not connected to the neutral. Separate ground bars must be used on non-service entrance panels.

Insulated/Bondable Single Neutral

Panels are supplied with a single insulated neutral. For service entrance applications, all that is required to bond the neutral is to loosen the bonding screw and the neutral screw directly beside it, insert the bonding strap into the neutral bar, and re-tighten both connections. The single neutral can be moved by the contractor to the other side of the panel, if desired. When used as a service entrance panel, unused neutral connections may be used for the termination of equipment grounds. For non-service entrance (sub-panel) applications, the panel may be installed with the bonding strap not connected to the neutral. Separate ground bars must be used on non-service entrance panels.

Inboard Plug-On Neutral

Code changes and higher safety standards are leading to more arc fault circuit interrupter (AFCI) installations. With the electrical contractor in mind, Eaton has revolutionized the way Combination AFCIs are installed with the Plug-on Neutral line of loadcenters and breakers. This unique product solution enables the contractor to connect the breaker directly to the neutral bar, eliminating the need for wiring a pigtail.

Grounds

In service entrance applications where the neutral is bonded, unused neutral holes may be used for terminating ground conductors. In sub-feed panels, the neutral must be isolated (non-bonded), and ground wires must be terminated on a separate ground bar.

The insulated/bondable single/split neutral panels have sufficient terminations for both ground and neutral conductors. The insulated/bondable single split neutral panels are supplied with a separate factory-installed ground bar if the catalog number contains a "G." If not, a separate ground bar should be installed. Insulated/Bondable Single Neutral panels are supplied without a ground bar (unless otherwise noted), and ground bar kits, if needed, must be purchased separately.

1

Standards and Certifications

UL® Listings

All Eaton Type CH loadcenters are listed under UL File E8741.

Neutral and Ground Terminals

The standard terminals on grounds and neutrals are rated to accept (3)—#14–#10 Cu/Al or (1)—#14–4 wires. For larger cables, add-on neutral lugs may be ordered from the Accessories.

Note: NEC® allows only one current carrying conductor per hole on neutrals unless otherwise noted.

Bottom-Fed Loadcenters

When the power cable is brought into the loadcenter from below the panel; then the main lug panels, and single-phase, 225 A and below, loadcenters can be rotated 180 degrees to allow straight-in wiring of power cables to the main terminals. Because the CSR main circuit breaker handle operates horizontally, the orientation of the main circuit breaker handle is consistent with the requirements of NEC Article 240.81.

Gutter Splicing

Loadcenters are not UL listed as wiring troughs. Therefore, gutter splicing of riser cables to tap off to the main device is not permitted. Refer to NEC Article 373.8.

Fire Rating

Due to the numerous openings in both loadcenter boxes and trims, they should not be mounted in firewalls. There is no approval method for sealing the enclosures for this application.

Date Code

The date of manufacture of each loadcenter is printed on the outside of the carton as well as inside the loadcenter. On the carton, the date code is printed on the end carton label. In the loadcenter, the date code is located on the small white label located on the right side wall (with the main device on top).

The date code is in the following format: F # # # &. The "F" is the numeric code for the Lincoln, IL plant, and the three numbers are the year and week of manufacture, e.g., 023. The "&" sign at the end signifies the decade of the 2000s. The "!" at the end signifies the decade of the 2010s. Therefore, the date code F023& would indicate that the product was manufactured in the 23rd week of 2000. The 1980s are represented by a "+" sign and the 1990s are represented by a "=" at the end of the code.

Plug-On Type CH Breakers

Quick-make, quick-break switch mechanism combined with inverse time element tripping operation and trip-free handle design. Type CH circuit breakers trip to the OFF position eliminating nuisance callbacks. The thermal-magnetic trip curve avoids nuisance tripping on mild overloads while reacting almost instantaneously to severe short-circuit conditions. CHF breakers include a 'trip flag' to differentiate between a tripped breaker and one that has been turned off. Multipole breakers have internal common trip connection to operate all poles simultaneously. Handles are marked with ON-OFF indication and ampere rating of the breaker. Type CH breakers meet UL Standard 489, NEMA standards, and Federal Spec Classification W-C 375 b/Gen. They are UL listed under File Number E11713, E8741, E3624 and E51287: and CSA® certified file number LR87196, except Type CHT breakers.

Type CH Circuit Breaker Ratings

Single- and double-pole CH breakers rated 15 and 20 A have low instantaneous magnetic trip levels. The 15 and 20 A breakers with "HM" suffix have high magnetic trip settings recommended for circuits with inherently high inrush currents. All Type CH breakers are marked for heating, air conditioning and refrigeration (HACR) equipment application. Single-pole 15–20 A breakers are also suitable for switching duty (SWD). Shunt trip coils operate on 120 Vac and require one additional pole space per breaker.

Listed

Type CH Loadcenter

Extra 1.5 inch Knockout (38.1 mm)
- Larger knockout provides easier installation and time savings for renovation installations

Top or Bottom Feed
- Straight-in wiring saves labor and material
- One panel for either top or bottom applications

2/0 Lug
- Easily removable and can be installed in any location on the neutral bar

Commercial Grade Main Breaker
- 25 kAIC series rated main breaker in 150 A–225 A load-centers. 35, 42 and 100 kAIC series ratings are available
- Optional convertible design—reduces inventory requirements

One Piece Silver-Flashed Copper Bus
- Provides superior conductivity, corrosion resistance and durability

Drywall Marking on Enclosure
- Indicates proper mounting depth for flush applications

Steel Backpan
- Provides solid and reliable breaker mounting—single piece design for stability and durability

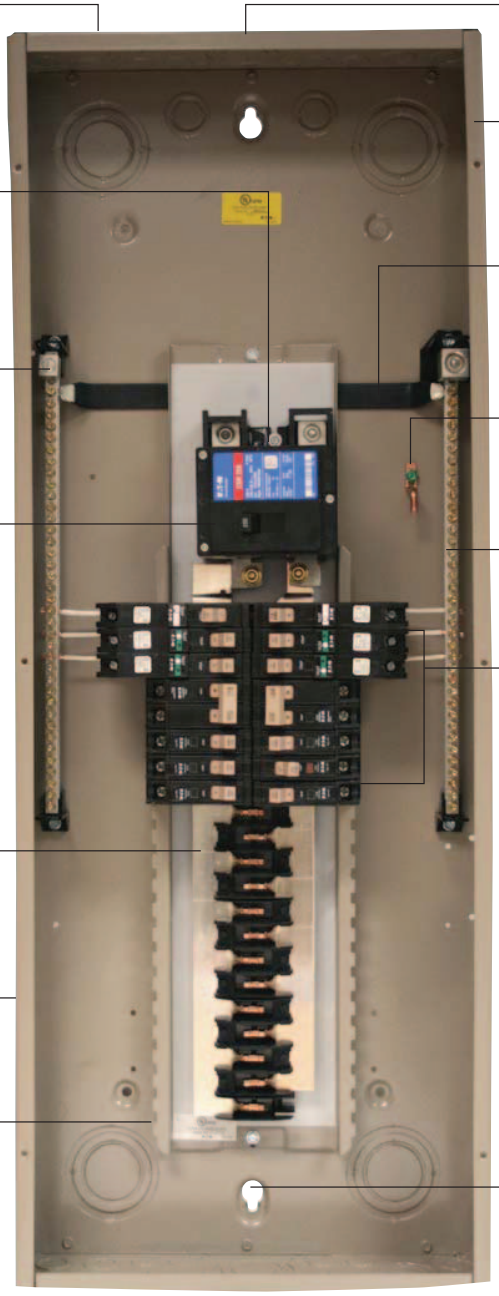

"Tangential" Center Knockout
- Easier installation for conduit applications

Unique Sandalwood Finish
- Aesthetically appealing, scratch-resistant powder coating

Neutral Bus (Strap)
- Easily removable for sub-panel applications

Bonding Z-Strap
- Provides easy field conversion for service entrance applications

Twin Neutral Bars
- Minimum 150% neutral capacity

Type CHF AFCI/GFCI/Thermal-Magnetic Breakers
- Advanced electronics effectively reduce nuisance tripping
- CHF AFCI breakers have a standard diagnostic LED indicating 1 of 7 trip codes
- Mechanical flag for trip indication (on thermal-magnetic AFCI and GFCI)
- All CH breakers provide industry exclusive 2-position handle with simple 1 step reset

Single Keyhole Mounting
- One keyhole at the top and bottom provides easier mounting and leveling

Warranty

The minimum warranty for residential loadcenters, breakers and surge protection devices shall be as follows:

- Lifetime loadcenter warranty
- Lifetime warranty on CH circuit breakers
- Lifetime warranty on CHSPT2ULTRA including $75,000 connected equipment warranty
- 1-year warranty on plug-in surge protective device (CHSA)

1

Catalog Number Selection

Loadcenters 100–225 A and 12–42 Circuits

CH 42 B _ _ 200 _ K

LC Type
Type CH 3/4-inch (19.1 mm) branch circuit breakers

Number of Circuits
Selection circuits

2	20
4	22
8	24
12	28
14	30
16	32
18	42

Main Device
- **L** = Main lug only
- **B** = Main breaker
- **N** = Convertible
- **H** = High AIC main breaker

Construction
- **Blank** = Standard
- **PN** = Plug-on neutral

Phases
- **Blank** = Single-phase
- **3** = Three-phase

Bus Amperes

40	150
70	200
100	225
125	

Box Sizes
- **B**
- **C**
- **D**
- **E**
- **G**
- **J**
- **K**
- **L**
- **R** = Outdoor (no cover)

Accessories
- **Blank** = Standard
- **EC** = Surge ready
- **SUR** = Surge factory installed

Indoor Covers Ordered Separately

CH _ 8 K F _

Type CH

Factory Options
- **Blank** = Standard
- **SUR** = Surge/surge ready

Loadcenter Cover Series

Box Size
Indicated in loadcenter catalog number

Mounting
- **F** = Combination flush/surface
- **S** = Surface

Accessories
- **Blank** = Standard
- **M** = Mechanical interlock

Note: All combinations are not valid, refer to the catalog section.

Product Selection

Single-Phase—Main Circuit Breaker Loadcenters—10/25 kAIC

CH42B200K

Single-Phase Three-Wire—120/240 Vac—Insulated/Bondable Split Neutral (Unless Otherwise Noted)

Main Breaker Type	Main Ampere Rating	Maximum Number 3/4-Inch (19.1 mm) of Poles	Enclosure Type	Box Size	Wire Size Range Cu/Al 60 °C or 75 °C for Main Breaker	Loadcenter ①② Catalog Number	Loadcenter Cover Catalog Number Combination ③	Surface
CH 10 kAIC	100	14	Indoor	B	#6–1/0	**CH14B100B** ④	**CH8BF**	**CH8BS**
		14	Outdoor	B	#6–1/0	**CH14B100R** ⑤	—	—
		18	Indoor	C	#6–1/0	**CH18B100C** ④	**CH8CF**	**CH8CS**
		18	Outdoor	C	#6–1/0	**CH18B100R** ⑤	—	—
		22	Indoor	C	#6–1/0	**CH22B100C** ④	**CH8CF**	**CH8CS**
		22	Outdoor	C	#6–1/0	**CH22B100R** ⑤	—	—
		30	Indoor	D	#6–1/0	**CH30B100D** ④	**CH8DF**	**CH8DS**
		30	Outdoor	D	#6–1/0	**CH30B100R** ⑤	—	—
	125	22	Indoor	C	#6–1/0	**CH22B125C** ④	**CH8CF**	**CH8CS**
		22	Outdoor	C	#6–1/0	**CH22B125R** ⑤	—	—
		30	Indoor	D	#6–1/0	**CH30B125D** ④	**CH8DF**	**CH8DS**
		30	Outdoor	D	#6–1/0	**CH30B125R** ⑤	—	—
CSR 25 kAIC	150	8	Outdoor	E	#2–300 kcmil	**CH8B150RF** ⑥	—	—
		24	Indoor	E	#2–300 kcmil	**CH24B150E** ④	**CH8EF**	**CH8ES**
		24	Outdoor	E	#2–300 kcmil	**CH24B150R** ⑤	—	—
		32	Indoor	J	#2–300 kcmil	**CH32B150J** ④	**CH8JF**	**CH8JS**
		32	Outdoor	J	#2–300 kcmil	**CH32B150R** ⑤	—	—
	200	8	Outdoor	E	#2–300 kcmil	**CH8B200RF** ⑥	—	—
		24	Indoor	E	#2–300 kcmil	**CH24B200E** ④	**CH8EF**	**CH8ES**
		24	Outdoor	E	#2–300 kcmil	**CH24B200R** ⑤	—	—
		32	Indoor	J	#2–300 kcmil	**CH32B200J** ④	**CH8JF**	**CH8JS**
		32	Outdoor	J	#2–300 kcmil	**CH32B200R** ⑤	—	—
		42	Indoor	K	#2–300 kcmil	**CH42B200K** ④	**CH8KF**	**CH8KS**
		42	Outdoor	K	#2–300 kcmil	**CH42B200R** ⑤	—	—
	225	32	Indoor	J	#2–300 kcmil	**CH32B225J** ④	**CH8JF**	**CH8JS**
		32	Outdoor	J	#2–300 kcmil	**CH32B225R** ⑤	—	—
		42	Indoor	K	#2–300 kcmil	**CH42B225K** ④	**CH8KF**	**CH8KS**
		42	Outdoor	K	#2–300 kcmil	**CH42B225R** ⑤	—	—
DK 10 kAIC	300	42	Indoor	PM	(2) 3/0–250 kcmil	**CH42PM300**	**CH7PMF** ⑦	**CH7PMS**
	400	42	Indoor	PM	(2) 3/0–250 kcmil	**CH42PM400**	**CH7PMF** ⑦	**CH7PMS**

Notes

① All main circuit breaker loadcenters are listed for use as service entrance equipment.
② Ground bar kits priced separately. See **Page V1-T1-25**.
③ Combination style covers may be used in surface or flush applications.
④ Can be top or bottom fed by rotating the enclosure and trim 180 degrees.
⑤ Rainproof panels are furnished with hub closure plates. For rainproof hubs, refer to **Page V1-T1-25**.
⑥ Panel includes #4–300 kcmil feed-through lugs.
⑦ This cover is for flush applications only (not combination).

Box sizes **Pages V1-T1-27** and **V1-T1-28**.

Single-Phase—High Interrupting Rated Main Circuit Breaker Loadcenters—100 kAIC

Single-Phase Three-Wire—120/240 Vac—Insulated/Bondable Split Neutral

Main Breaker Type	Main Ampere Rating	Maximum Number 3/4-Inch (19.1 mm) Poles	Enclosure Type	Box Size	Wire Size Range Cu/Al 60 °C or 75 °C for Main Breaker	Loadcenter ① Catalog Number	Loadcenter Cover Catalog Number Combination ②	Surface
CHB4 100 kAIC ⑤	100	32	Indoor	L	#6–1/0	**CH32H100L** ③	**CH8LF**	**CH8LS**
		32	Outdoor	L	#6–1/0	**CH32H100R** ④	—	—
CHH 100 kAIC ⑤	150	32	Indoor	L	#2/0–300 kcmil	**CH32H150L**	**CH8LF**	**CH8LS**
		32	Outdoor	L	#2/0–300 kcmil	**CH32H150R** ④	—	—
	200	32	Indoor	L	#2/0–300 kcmil	**CH32H200L**	**CH8LF**	**CH8LS**
		32	Outdoor	L	#2/0–300 kcmil	**CH32H200R** ④	—	—
		42	Indoor	L	#2/0–300 kcmil	**CH42H200L**	**CH8LF**	**CH8LS**
		42	Outdoor	L	#2/0–300 kcmil	**CH42H200R** ④	—	—
	225	42	Indoor	L	#2/0–300 kcmil	**CH42H225L**	**CH8LF**	**CH8LS**
		42	Outdoor	L	#2/0–300 kcmil	**CH42H225R** ④	—	—

Notes

① All main circuit breaker loadcenters are listed for use as service entrance equipment.
② Combination style covers may be used in surface or flush applications.
③ Loadcenter can be top or bottom fed by rotating the enclosure and trim 180 degrees.
④ Rainproof panels are furnished with hub closure plates. For rainproof hubs, refer to **Page V1-T1-25**.
⑤ Series rated for 100 kAIC with all Types CH, CHT and CHP breakers.

Single-Phase—Main Lug Loadcenters

Single-Phase Three-Wire—120/240 Vac—Insulated/Bondable Single Neutral

	Main Ampere Rating	Maximum Number 3/4-Inch (19.1 mm) Space	Poles	Enclosure Type	Type of Trim (Included)	Box Size	Wire Size Range Cu/Al 60 °C or 75 °C for Main Lugs	Loadcenter Catalog Number
Surface Outdoor	40	2	4 ①	Indoor	Surface (no door)	5	#14–6	**CH2L40SP** ②③
		2	4 ①	Outdoor	—	5R	#14–6	**CH2L40RP** ②③④
		2	4 ①	Indoor	Flush (no door)	5	#14–6	**CH2L40FP** ②③
Flush Outdoor	70	2	4 ①	Indoor	Surface (no door)	5	#14–2	**CH2L70SP** ②③
		2	4 ①	Outdoor	—	5R	#14–2	**CH2L70RP** ②③④
		2	4 ①	Indoor	Flush (no door)	5	#14–2	**CH2L70FP** ②③
Surface (No Door)	125	2	4 ①	Indoor	Surface (no door)	6	#14–1/0	**CH2L125SP** ②③
		2	4 ①	Outdoor	—	6R	#14–1/0	**CH2L125RP** ②③④
		2	2	Outdoor	—	—	#14–1/0	**CH2L125RSE2P** ④⑤⑥
		2	4 ①	Indoor	Flush (no door)	6	#14–1/0	**CH2L125FP** ②③
		4	8 ①	Indoor	Surface (no door)	7	#14–1/0	**CH4L125SP** ②⑦
		4	8 ①	Outdoor	—	7R	#14–1/0	**CH4L125RP** ②④⑦
Flush (No Door)		4	8 ①	Indoor	Flush (no door)	7	#14–1/0	**CH4L125FP** ②⑦
		6	12 ①	Outdoor	—	6R	#14–1/0	**CH6L125R** ②⑥⑦
		8	16 ①	Indoor	Surface (no door)	7	#6–1/0	**CH8L125SP** ②⑧
		8	16 ①	Outdoor	—	7R	#6–1/0	**CH8L125RP** ②⑥⑦
		8	16 ①	Indoor	Flush (no door)	7	#6–1/0	**CH8L125FP** ②⑧
Outdoor								

Notes

① Requires the use of Type CHT breakers.

② Ground bar kits priced separately, see **Page V1-T1-25**.
– For 2/4 and 6/12 circuit loadcenters, use Type GBK5 or GBK520 ground bar
– For 4/8 and 8/16 circuit loadcenters, use Type GBK10 ground bar
– Ground bars mount to the left side wall of the enclosure for the 4/8, 6/12 and 8/16 circuit loadcenters

③ Suitable for use as service equipment when not more than two service disconnecting mains are provided or when not used as a lighting and appliance panelboard (see Article 408.34 of the NEC).

④ Rainproof panels are furnished with hub closure plates. For rainproof hubs, refer to **Page V1-T1-25**.

⑤ For use as service entrance applications only.

⑥ Neutral/ground holes (6) #14–6 and (3) #14–2/0 AWG Cu/Al.

⑦ Suitable for use as service equipment when not more than two service disconnecting mains are provided or when not more than six service disconnecting mains are provided and when not used as a lighting and appliance panelboard (see Article 408.34 of the NEC).

⑧ Suitable for use as service equipment when a main breaker is used or when not more than six service disconnecting mains are provided and when not used as a lighting and appliance panelboard (see Article 408.34 of the NEC).

Box sizes **Pages V1-T1-27** and **V1-T1-28**.

CH42L225G

Single-Phase Three-Wire—120/240 Vac—Insulated/Bondable Split Neutral—Factory-Installed Ground Bar

Main Ampere Rating	Maximum Number 3/4-Inch (19.1 mm) Poles	Enclosure Type	Box Size	Wire Size Range Cu/Al 60 °C or 75 °C for Main Lugs	Loadcenter Catalog Number	Loadcenter Cover Catalog Number Combination	Loadcenter Cover Catalog Number Surface
125	12	Indoor	B	#6–2/0	**CH12L125B** ①	**CH8BF**	**CH8BS**
	12	Outdoor	B	#6–2/0	**CH12L125R** ①②	—	—
	16	Indoor	B	#6–2/0	**CH16L125B** ①	**CH8BF**	**CH8BS**
	16	Outdoor	B	#6–2/0	**CH16L125R** ①②	—	—
	20	Indoor	C	#6–2/0	**CH20L125C** ①	**CH8CF**	**CH8CS**
	20	Outdoor	C	#6–2/0	**CH20L125R** ①②	—	—
	24	Indoor	C	#6–2/0	**CH24L125C** ①	**CH8CF**	**CH8CS**
	24	Outdoor	C	#6–2/0	**CH24L125R** ①②	—	—
150	24	Indoor	D	#4–300 kcmil	**CH24L150D** ①	**CH8DF**	**CH8DS**
	24	Outdoor	D	#4–300 kcmil	**CH24L150R** ②③	—	—
	32	Indoor	D	#4–300 kcmil	**CH32L150D** ①	**CH8DF**	**CH8DS**
	32	Outdoor	D	#4–300 kcmil	**CH32L150R** ②③	—	—
200	12	Indoor	D	#4–300 kcmil	**CH12L200D** ①	**CH8DF**	**CH8DS**
	12	Outdoor	D	#4–300 kcmil	**CH12L200R** ②③	—	—
	16	Indoor	D	#4–300 kcmil	**CH16L200D** ①	**CH8DF**	**CH8DS**
	16	Outdoor	D	#4–300 kcmil	**CH16L200R** ②③	—	—
225	24	Indoor	D	#4–300 kcmil	**CH24L225D** ①	**CH8DF**	**CH8DS**
	24	Outdoor	D	#4–300 kcmil	**CH24L225R** ②③	—	—
	32	Indoor	D	#4–300 kcmil	**CH32L225D** ①	**CH8DF**	**CH8DS**
	32	Outdoor	D	#4–300 kcmil	**CH32L225R** ②③	—	—
	42	Indoor	G	#4–300 kcmil	**CH42L225G** ③	**CH8GF**	**CH8GS**
	42	Outdoor	G	#4–300 kcmil	**CH42L225R** ②③	—	—
400	42	Indoor	P	(2) 1/0–300 kcmil (1) 750 kcmil	**CH42PL400** ④	**CH7PF** ⑤	**CH7PS**

Notes

① Suitable for use as service equipment when not more than six disconnecting means are provided and when not used as a lighting and appliance panelboard (see Article 408.34 of the NEC).

② Rainproof panels are furnished with hub closure plates. For rainproof hubs, refer to **Page V1-T1-25**.

③ Suitable for use as service equipment when a circuit breaker is used as a main breaker. The main breaker is backfed and requires hold-down bracket kit catalog number **CH125RB**.

④ Suitable for use as service equipment when a circuit breaker is used as a main breaker. The main breaker is backfed and must be a Type CHB. **The breaker cannot be a Type CH**.

⑤ This cover is for flush application only (not combination).

Box sizes **Pages V1-T1-27** and **V1-T1-28**.

Convertible Loadcenters MCB or MLO—Base Units and Main Devices—10/25/35 kAIC

Complete assembly consists of: loadcenter, cover, and either main breaker kit or main lug kit.

Indoor—Single-Phase—Three-Wire—120/240 V—Insulated/Bondable Split Neutral—Top or Bottom Feed

Maximum Main Ampere Rating	Maximum Number of Single Poles	Box Size	Loadcenter Box and Panel Catalog Number ①	Loadcenter Cover Catalog Number		Main Lug Kit		Main Breaker Kit			
				Combination	Surface	Wire Size	Catalog Number	kAIC Rating	Wire Size	Catalog Number	
125	22	C	**CH22N125C**	**CH8CF**	**CH8CS**	#10–1/0	**CHL125N**	10	#10–1/0	**CH2100N** ③	—
										CH2125N ③	—
200	32	J	**CH32N200J**	**CH8JF**	**CH8JS**	#4–300 kcmil	**CHL225N**	25/35 ②	#2–300 kcmil	**CSR2125N**	**CSH2125N** ④
										CSR2150N	**CSH2150N** ④
										CSR2175N	**CSH2175N** ④
										CSR2200N	**CSH2200N** ④
225	42	K	**CH42N225K**	**CH8KF**	**CH8KS**	#4–300 kcmil	**CHL225N**	25/35 ②	#2–300 kcmil	**CSR2125N**	**CSH2125N** ④
										CSR2150N	**CSH2150N** ④
										CSR2175N	**CSH2175N** ④
										CSR2200N	**CSH2200N** ④
										CSR2225N	**CSH2225N** ④

Outdoor—Single-Phase—Three-Wire—120/240 V—Insulated/Bondable Split Neutral (Unless Otherwise Noted)

Maximum Main Ampere Rating	Maximum Number of Single Poles	Box Size	Loadcenter Box and Panel Catalog Number ①	Main Lug Kit		Main Breaker Kit			
				Wire Size	Catalog Number	kAIC Rating	Wire Size	Catalog Number	
125	22	C	**CH22N125R** ⑤	#10–1/0	**CHL125N**	10	#10–1/0	**CH2100N** ③	—
								CH2125N ③	—
200	8	E	**CH8N200RF** ⑤⑥⑦	#4–300 kcmil	**CHL225N**	25/35 ②	#2–300 kcmil	**CSR2125N**	**CSH2125N**
								CSR2150N	**CSH2150N**
								CSR2175N	**CSH2175N**
								CSR2200N	**CSH2200N**
200	32	J	**CH32N200R** ⑤	#4–300 kcmil	**CHL225N**	25/35 ②	#2–300 kcmil	**CSR2125N**	**CSH2125N** ④
								CSR2150N	**CSH2150N** ④
								CSR2175N	**CSH2175N** ④
								CSR2200N	**CSH2200N** ④
225	42	K	**CH42N225R** ⑤	#4–300 kcmil	**CHL225N**	25/35 ②	#2–300 kcmil	**CSR2125N**	**CSH2125N** ④
								CSR2150N	**CSH2150N** ④
								CSR2175N	**CSH2175N** ④
								CSR2200N	**CSH2200N** ④
								CSR2225N	**CSH2225N** ④

Notes

① Panel does not include main. Order main breaker or main lug kit separately.
② If 35 kAIC is required, use CSH breaker.
③ Hold-down kit included.
④ 35 kAIC series combination rating is obtained when Types CH, CHT and CHP branch breakers are used with CSH main.
⑤ Rainproof panels are furnished with hub closure plates. For rainproof hubs, refer to **Page V1-T1-25**.
⑥ Includes feed-through lugs for both phase and neutral conductors.
⑦ Insulated/bondable single neutral.

Interrupting rating depends on main circuit breaker selected.

Three-Phase—Main Circuit Breaker Loadcenters—10 kAIC

CH42B3200L

Three-Phase Four-Wire—208Y/120 Vac or 240 Vac Insulated/Bondable Split Neutral

Main Breaker Type	Main Ampere Rating	Maximum Number 3/4-Inch (19.1 mm) Poles	Enclosure Type	Box Size	Wire Size Range Cu/Al 60 °C or 75 °C for Main Breaker	Loadcenter ①② Catalog Number	Loadcenter Cover Catalog Number Combination	Loadcenter Cover Catalog Number Surface
CC 10 kAIC	150	30	Indoor	L	#1–4/0	**CH30B3150L**	**CH8LF**	**CH8LS**
		30	Outdoor	L	#1–4/0	**CH30B3150R** ③	—	—
	200	30	Indoor	L	#2/0–300 kcmil	**CH30B3200L**	**CH8LF**	**CH8LS**
		30	Outdoor	L	#2/0–300 kcmil	**CH30B3200R** ③	—	—
		42	Indoor	L	#2/0–300 kcmil	**CH42B3200L**	**CH8LF**	**CH8LS**
		42	Outdoor	L	#2/0–300 kcmil	**CH42B3200R** ③	—	—
	225	30	Indoor	L	#2/0–300 kcmil	**CH30B3225L**	**CH8LF**	**CH8LS**
		30	Outdoor	L	#2/0–300 kcmil	**CH30B3225R** ③	—	—
		42	Indoor	L	#2/0–300 kcmil	**CH42B3225L**	**CH8LF**	**CH8LS**
		42	Outdoor	L	#2/0–300 kcmil	**CH42B3225R** ③	—	—
	400	42	Indoor	PM	(2) 3/0–350 kcmil	**CH424PM400**	**CH7PMF** ④	**CH7PMS**

Three-Phase—High Interrupting Rated Main Circuit Breaker Loadcenters—100 kAIC

Three-Phase Four-Wire—208Y/120 Vac or 240 Vac Insulated/Bondable Split Neutral

Main Breaker Type	Main Ampere Rating	Maximum Number 3/4-Inch (19.1 mm) of Poles	Enclosure Type	Box Size	Wire Size Range Cu/Al 60 °C or 75 °C for Main Breaker	Loadcenter Catalog Number ①②	Loadcenter Cover Catalog Number Combination	Loadcenter Cover Catalog Number Surface
CHH 100 kAIC ⑤	200	30	Indoor	L	#2/0–300 kcmil	**CH30H3200L**	**CH8LF**	**CH8LS**
		30	Outdoor	L	#2/0–300 kcmil	**CH30H3200R** ③	—	—
		42	Indoor	L	#2/0–300 kcmil	**CH42H3200L**	**CH8LF**	**CH8LS**
		42	Outdoor	L	#2/0–300 kcmil	**CH42H3200R** ③	—	—
	225	42	Indoor	L	#2/0–300 kcmil	**CH42H3225L**	**CH8LF**	**CH8LS**
		42	Outdoor	L	#2/0–300 kcmil	**CH42H3225R** ③	—	—

Notes

① All main circuit breaker loadcenters are listed for use as service entrance equipment.
② Ground bar kits priced separately. For ground bar kits, see **Page V1-T1-25**.
③ Rainproof loadcenters are furnished with hub closure plates. For rainproof hubs, refer to **Page V1-T1-25**.
④ This cover for flush application only (not combination).
⑤ 100 kAIC series combination rating is obtained when Types CH and CHP branch breakers are used with CHH main.

Three-Phase—Main Lug Loadcenters

Three-Phase Four-Wire—208Y/120 Vac or 240 Vac Insulated/Bondable Split Neutral (Unless Otherwise Noted)

Main Ampere Rating	Maximum Number 3/4-Inch (19.1 mm) Spaces	Poles	Enclosure Type	Type of Trim Included	Box Size	Wire Size Range Cu/Al 60 °C or 75 °C for Main Lugs	Loadcenter Catalog Number	Loadcenter Cover Catalog Number Combination	Single
125	6	12 ①	Indoor	Surface, no door	7	#14–1/0	**CH6L3125SP** ②③④	—	—
	6	12 ①	Outdoor	—	7R	#14–1/0	**CH6L3125RP** ②③④⑤	—	—
	6	12 ①	Indoor	Flush, no door	7	#14–1/0	**CH6L3125FP** ②③④	—	—
	12	12	Indoor	—	B	#6–2/0	**CH12L3125B** ⑥⑦	**CH8BF**	**CH8BS**
	12	12	Outdoor	—	B	#6–2/0	**CH12L3125R** ⑤⑥⑦	—	—
	18	18	Indoor	—	C	#6–2/0	**CH18L3125C** ⑥⑦	**CH8CF**	**CH8CS**
	18	18	Outdoor	—	C	#6–2/0	**CH18L3125R** ⑥⑦⑧	—	—
	24	24	Indoor	—	C	#6–2/0	**CH24L3125C** ⑥⑦	**CH8CF**	**CH8CS**
	24	24	Outdoor	—	C	#6–2/0	**CH24L3125R** ⑥⑦⑧	—	—
150	30	30	Indoor	—	D	#4–300 kcmil	**CH30L3150D** ⑥⑦	**CH8DF**	**CH8DS**
	30	30	Outdoor	—	D	#4–300 kcmil	**CH30L3150R** ⑤⑥⑨	—	—
225	24	24	Indoor	—	D	#4–300 kcmil	**CH24L3225D** ⑥⑦	**CH8DF**	**CH8DS**
	24	24	Outdoor	—	D	#4–300 kcmil	**CH24L3225R** ⑤⑥⑨	—	—
	30	30	Indoor	—	D	#4–300 kcmil	**CH30L3225D** ⑥⑦	**CH8DF**	**CH8DS**
	30	30	Outdoor	—	D	#4–300 kcmil	**CH30L3225R** ⑤⑥⑨	—	—
	42	42	Indoor	—	G	#4–300 kcmil	**CH42L3225G** ⑧⑨	**CH8GF**	**CH8GS**
	42	42	Outdoor	—	G	#4–300 kcmil	**CH42L3225R** ⑤⑧⑨	—	—
400	42	42	Indoor	—	P	(2) 1/0–300 kcmil (1) 750 kcmil	**CH424PL400** ⑩⑪	**CH7PF** ⑫	**CH7PS**

Notes

① Requires the use of Type CHT breakers.
② Suitable for use as service equipment when not more than two service disconnecting means are provided or when not more than six service disconnecting means are provided and when not used as a lighting and appliance panelboard (see Article 408.34 of the NEC).
③ Ground bar kits priced separately, see **Page V1-T1-25**.
– Use GBK10 ground bar
– Ground bars mount to the left side wall of the enclosure.
④ Insulated/bondable single neutral.
⑤ Rainproof loadcenters are furnished with hub closure plates. For rainproof hubs, refer to **Page V1-T1-25**.
⑥ Ground bar Type GBK14 is installed.
⑦ Suitable for use as service equipment when a circuit breaker is used as a main breaker. The main breaker is backfed and requires hold-down bracket kit catalog number Type **CH125RB**. Suitable for use as service equipment when not more than six service disconnecting means are provided and when not used as a lighting and appliance panelboard (see Article 408.34 of the NEC).
⑧ Ground bar Type GBK21 is installed.
⑨ Suitable for use as service equipment when a circuit breaker is used as a main breaker. The main breaker is backfed and requires hold-down kit catalog number Type **CH125RB**.
⑩ For ground bar kits, see **Page V1-T1-25**.
⑪ Suitable for use as service equipment when a circuit breaker is used as a main breaker. The main breaker is backfed and must be a Type CHB. **The breaker cannot be a Type CH**.
⑫ This cover for flush application only (not combination).

Box sizes **Pages V1-T1-27** and **V1-T1-28**.

Spa Panels

Contents—CH Specialty Products

Description	*Page*
Overview	V1-T1-2
CH Specialty Products	
Spa Panels	
Surge Panel	V1-T1-15
Plug-On Neutral Loadcenter	V1-T1-17
Type CH Renovation Loadcenter	V1-T1-18
Type CH Retrofit Interior Kits	V1-T1-19
CH Loadcenter Options and Accessories	V1-T1-22
CH Circuit Breakers	V1-T1-31

CH Specialty Products

Spa Panels

Product Description:

Eaton's CH Spa Panels are premium factory-assembled "combination" units that provide ground fault protection, as well as a convenient way to turn spa pumps on and off. The NEC requires that all pool and spa pumps be protected by a ground fault interrupter and a disconnect switch mounted within 10 feet of the tub or the spa.

Features

- Two extra circuits for additional loads
- Limited lifetime warranty
- UL Listed
- Tough powder-coated galvanized steel enclosure
- Factory-installed two-pole ground fault circuit interrupter (GFCI)

Quick-Pro℠

All you need to know to save time and make more money. Specified on certain Eaton products, the Quick-Pro symbol allows for immediate recognition of products that are designed for straightforward installation. When you see Quick-Pro, you know you can install quickly—sometimes up to 50% less than the usual installation time—and move on to your next job.

Product Selection

CH Spa Panel

Single-Phase Three-Wire—120/240 Vac Insulated/Bondable Neutral—Factory-Installed Ground Bar

Main Ampere Rating	Circuit Breaker Included	Enclosure Type	Type of Trim Included	Box Size	Wire Size Range Cu/Al 60 °C or 75 °C for Main Lugs	Catalog Number
30	CH230GF	Outdoor	—	5R	#14–1/0	**CH30SPA** ①
40	CH240GF	Outdoor	—	5R	#14–1/0	**CH40SPA** ②
50	CH250GF	Outdoor	—	5R	#14–1/0	**CH50SPA** ③
60	CH260GF	Outdoor	—	5R	#14–1/0	**CH60SPA** ④

Notes

① Includes a CH230GFI breaker, factory installed, and two extra circuits for convenience.
② Includes a CH240GFI breaker, factory installed, and two extra circuits for convenience.
③ Includes a CH250GFI breaker, factory installed, and two extra circuits for convenience.
④ Includes a CH260GFI breaker, factory installed, and two extra circuits for convenience.

Surge Panel

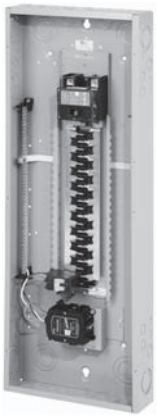

Contents—CH Specialty Products

Description	*Page*
Overview	V1-T1-2
CH Specialty Products	
Spa Panels	V1-T1-14
Surge Panel	
Plug-On Neutral Loadcenter	V1-T1-17
Type CH Renovation Loadcenter	V1-T1-18
Type CH Retrofit Interior Kits	V1-T1-19
CH Loadcenter Options and Accessories	V1-T1-22
CH Circuit Breakers	V1-T1-31

Surge Panel

Product Description

Eaton's Type CH Surge Loadcenter includes a factory-mounted and wired surge suppressor device. There is a knockout in the cover that allows the user to view the status indication lights on the surge suppressor. The CH Surge Loadcenter reduces the surge current, helping protect sensitive home electronic equipment.

Save labor by installing a factory-mounted surge protective device.

Factory-Installed Surge Protection

- Includes a CHSPT2ULTRA and a two-pole 50 A circuit breaker
- Increases the effectiveness of surge protection due to reduced lead length
- A modified deadfront allows for easy viewing of indicating lights

Surge Ready

- Provides a mounting provision for CHSPT2ULTRA
- A modified deadfront allows for easy viewing of indicating lights

Product Selection

Surge Installed Loadcenters

Ampere Rating	Type	Number of Circuits	Loadcenter Catalog Number	Loadcenter Cover Catalog Number Combination	Surface
225	Convertible	42	**CHSUR42N225L** ①	**CHSUR8LF**	**CHSUR8LS**
225	Convertible ②	42	**CHSUR42L225L2** ①	**CHSUR8LF**	**CHSUR8LS**
200	Main breaker	42	**CHSUR42B200L2** ①	**CHSUR8LF**	**CHSUR8LS**
225	Convertible	32	**CHSUR32N225K** ①	**CHSUR8KF**	**CHSUR8KS**
225	Convertible ②	32	**CHSUR32L225K** ①	**CHSUR8KF**	**CHSUR8KS**
200	Main breaker	32	**CHSUR32B200K** ①	**CHSUR8KF**	**CHSUR8KS**
150	Main breaker	32	**CHSUR32B150K** ①	**CHSUR8KF**	**CHSUR8KS**
100	Main breaker	32	**CHSUR32B100K** ①	**CHSUR8KF**	**CHSUR8KS**
125	Convertible ②	24	**CHSUR24L125E** ①	**CHSUR8EF**	**CHSUR8ES**
100	Main breaker	24	**CHSUR24B100E** ①	**CHSUR8EF**	**CHSUR8ES**
200	Convertible	40/40	**BRSUR4040N200**	Cover included	
200	Main lug	40/40	**BRSUR4040L200**	Cover included	
200	Main breaker	40/40	**BRSUR4040B200**	Cover included	
200	Convertible	30/40	**BRSUR3040N200**	Cover included	
200	Main lug	30/40	**BRSUR3040L200**	Cover included	
200	Main breaker	30/40	**BRSUR3040B200**	Cover included	

Notes

① Order cover separately.
② With main lugs installed.

Surge Ready Loadcenters (provision only, CHSPT2ULTRA and breaker not included)

Ampere Rating	Type	Number of Circuits	Loadcenter Catalog Number ①	Loadcenter Cover Catalog Number Combination	Surface
225	Convertible	42	**CHEC42N225L**	**CHSUR8LF**	**CHSUR8LS**
225	Convertible ②	42	**CHEC42L225L**	**CHSUR8LF**	**CHSUR8LS**
200	Main breaker	42	**CHEC42B200L**	**CHSUR8LF**	**CHSUR8LS**
225	Convertible ②	32	**CHEC32L225K**	**CHSUR8KF**	**CHSUR8KS**
225	Convertible	32	**CHEC32N225K**	**CHSUR8KF**	**CHSUR8KS**
225	Convertible	32	**CHEC32N225R** ③	—	—
200	Main breaker	32	**CHEC32B200K**	**CHSUR8KF**	**CHSUR8KS**
150	Main breaker	32	**CHEC32B150K**	**CHSUR8KF**	**CHSUR8KS**
100	Main breaker	32	**CHEC32B100K**	**CHSUR8KF**	**CHSUR8KS**
125	Convertible ②	24	**CHEC24L125E**	**CHSUR8EF**	**CHSUR8ES**
100	Main breaker	24	**CHEC24B100E**	**CHSUR8EF**	**CHSUR8ES**

Main Breaker Kits

Maximum Main Ampere Rating	Catalog Number 25 kAIC	35 kAIC
100	**CSR2100N**	**CSH2100N**
150	**CSR2150N**	**CSH2150N**
200	**CSR2200N**	**CSH2200N**
225	**CSR2225N**	**CSH2225N**

Main Lug Kits

Maximum Main Ampere Rating	Catalog Number
125	**CHL125N**
225	**CHL225N**

Technical Data and Specifications

Ratings

- Loadcenter
  - 25 kAIC main breaker, main lug only, and convertible main breaker/main lug
  - Factory installed or provision for field-installed surge suppressor
  - Top or bottom feed
- Surge protective device (CHSPT2ULTRA)
  - Nominal discharge current: 20 kA (I_n)
  - Surge current capacity per phase: 108 kA
  - Warranty: $75,000 connected equipment ④
  - For further product ratings, see Volume 1, Tab 2.1 Surge Protection

Notes

① Order cover separately.

② With main lugs installed.

③ Rainproof loadcenters are furnished with hub closure plates. For rainproof hubs, refer to **Page V1-T1-25**.

④ For warranty details, visit www.eaton.com/surgetrap.

60-Circuit Plug-On Neutral Loadcenter

Contents—CH Specialty Products

Description	*Page*
Overview	V1-T1-2
CH Specialty Products	
Spa Panels	V1-T1-14
Surge Panel	V1-T1-15
Plug-On Neutral Loadcenter	
Type CH Renovation Loadcenter	V1-T1-18
Type CH Retrofit Interior Kits	V1-T1-19
CH Loadcenter Options and Accessories	V1-T1-22
CH Circuit Breakers	V1-T1-31

Plug-On Neutral Loadcenter

Product Description

Code changes and higher safety standards are leading to more arc fault and ground fault circuit interrupter installations. Eaton offers a unique product solution that enables a direct connection of the breaker to the neutral bar, eliminating the need for wiring a pigtail.

Features and Benefits

- Time savings up to 25% per AFCI/GFCI installation
- Eliminates nuisance tripping due to loose pigtail connections
- Clean gutter space
- Easier troubleshooting due to less wiring
- Backed by a limited lifetime warranty

Product Selection

Main Breaker Plug-On Neutral Loadcenters

Main Breaker Type	Main Ampere Rating	Max. Number 3/4-Inch Poles	Enclosure Type	Wire Size Range for Main Breaker	Catalog Number	Cover Catalog Number Combination	Cover Catalog Number Surface
CSR 25 kAIC	100	24	Indoor	#2–300 kcmil	**CH24BPN100E**	**CH8EF**	**CH8ES**
	200	32	Indoor	#2–300 kcmil	**CH32BPN200J**	**CH8JF**	**CH8JS**
	200	42	Indoor	#2–300 kcmil	**CH42BPN200K**	**CH8KF**	**CH8KS**
	200	60	Indoor	#2–300 kcmil	**CH60BPN200N**	**CH8NF**	**CH8NS**

Main Lug Only/Convertible Plug-On Neutral Loadcenters—With Factory Installed Main Lugs

Max. Ampere Rating	Max. Number 3/4-Inch Poles	Enclosure Type	Catalog Number	Wire Size Range for Main Breaker	Cover Catalog Number Combination	Cover Catalog Number Surface
125	24	Indoor	**CH24NLPN125E** ①	#6–300 kcmil	**CH8NLEF**	**CH8NLES**
225	32	Indoor	**CH32NLPN225J**	#6–300 kcmil	**CH8NLJF**	**CH8NLJS**
225	42	Indoor	**CH42NLPN225K**	#6–300 kcmil	**CH8NLKF**	**CH8NLKS**
225	60	Indoor	**CH60NLPN225N**	#6–300 kcmil	**CH8NLNF**	—

Main Breaker Kits

Breaker Ampere Rating	Lug Size	Catalog Number
100	#2–300 kcmil	**CSR2100**
150	#2–300 kcmil	**CSR2150N**
200	#2–300 kcmil	**CSR2200N**
225	#2–300 kcmil	**CSR2225N**

Note

① Maximum 125 A main device.

Renovation Panel

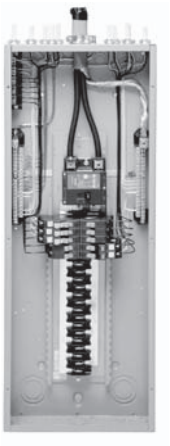

Contents—CH Specialty Products

Description	*Page*
Overview	V1-T1-2
CH Specialty Products	
Spa Panels	V1-T1-14
Surge Panel	V1-T1-15
Plug-On Neutral Loadcenter	V1-T1-17
Type CH Renovation Loadcenter	
Type CH Retrofit Interior Kits	V1-T1-19
CH Loadcenter Options and Accessories	V1-T1-22
CH Circuit Breakers	V1-T1-31

Type CH Renovation Loadcenter

Product Description

Eaton's Renovation Loadcenter is designed for the service contractor. With the addition of a five-circuit terminal block factory mounted in the top left corner of the loadcenter, the service contractor can terminate short-circuit wires instead of having to use expensive wire nuts. Also, the Renovation Loadcenter incorporates a twin-stacked neutral design that places the neutral and ground terminations higher in the loadcenter. Both of these features were added without increasing any size from a standard loadcenter. These features will eliminate the need for wire nuts and make for a much neater installation. There is a provision to field mount a second five-circuit terminal block (RN5TB) in the top right corner of the loadcenter. Choose amongst Eaton's Type CH breaker family for use in the Renovation Panel.

Product Selection

Single-Phase—Main Circuit Breaker Loadcenters 25 kAIC ①

Single-Phase, Three-Wire—120/240 Vac—Stacked Split Neutral

Main Breaker Type	Main Ampere Rating	Max. Number 3/4-Inch (19.1 mm) of Poles	Enclosure Type	Box Size	Wire Size Range Cu/Al 60 °C or 70 °C for Main Breakers	Loadcenter Catalog Number	Cover Catalog Number ② Combination	Cover Catalog Number ② Surface
CH	100	20	Indoor	C	#6–1/0	**CH22B100CRN**	**CH8CFF**	**CH8CS**
CSR	150	32	Indoor	J	#2–300 kcmil	**CH32B150JRN**	**CH8JF**	**CH8JS**
CSR	200	32	Indoor	J	#2–300 kcmil	**CH32B200JRN**	**CH8J**	**CH8JS**
CSR	200	42	Indoor	K	#2–300 kcmil	**CH42B200KRN**	**CH8KF**	**CH8KS**

Branch Circuit Breakers (CH)

See **Pages V1-T1-2–V1-T1-13**.

Renovation Loadcenter

Description	Catalog Number
Five-circuit terminal block kit	**RN5TB**
Ground bar kits (two maximum per panel)	(See **Page V1-T1-25**)

Notes

① 100 A main breaker is rated 10 kAIC.

② Combination style covers may be used in surface or flush applications.

All main circuit breaker loadcenters are listed for use as service entrance equipment. Loadcenters are factory-bonded for service entrance applications. Remove bonding strap for separate neutral and ground bars for sub-feed applications.

Type CH Retrofit Interior

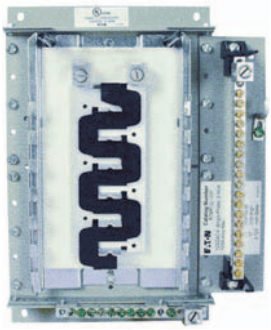

Type CH Retrofit Adjustable Interior

Type CH Retrofit Interior Collar and Assembly with Trim

Contents—CH Specialty Products

Description	*Page*
Overview	**V1-T1-2**
CH Specialty Products	
Spa Panels	**V1-T1-14**
Surge Panel	**V1-T1-15**
Plug-On Neutral Loadcenter	**V1-T1-17**
Type CH Renovation Loadcenter	**V1-T1-18**
Type CH Retrofit Interior Kits	
CH Loadcenter Options and Accessories	**V1-T1-22**
CH Circuit Breakers	**V1-T1-31**

Type CH Retrofit Interior Kits

Product Description

Eaton's unique Retrofit Interior allows the customer to cost-effectively and safely upgrade an electrical service without removing the existing enclosure from the wall.

Application Description

The Retrofit Interior is designed and tested specifically for renovating an outdated electrical panel in an apartment, a condominium or a single family home. These outdated panels are being recognized by local inspectors and other authorities as a possible hazard.

Opportunities to Retrofit

- Single- or three-phase
- Main lug only or main breaker
- Up to 42 circuits
- Up to 225 A interiors, 400 A available upon request
- Available with CH breakers (3/4-inch) with copper bus or BR breakers (1-inch) with aluminum bus
- The minimum lifetime warranty for residential breakers shall be as follows:
  - Limited lifetime warranty on all CH branch breakers and loadcenters
  - Refer to Eaton for complete warranty details

Features and Benefits

Upgrading Existing Electrical Infrastructure Is Simple

- Replaces vintage brands that have hard to find, expensive replacement breakers
- Safely upgrade to arc fault and ground fault breakers to meet current electrical codes
- Maximizes number of circuits available with compact design
- Eco-friendly in asbestos-filled environments
- Exclusive design

Save Time and Money Throughout the Installation

- Uses existing panel box and wires
- Eliminates expensive and time-consuming drywall/paint repair
- Saves 2–3 hours of installation time compared to a complete panel changeout
- Eliminates precise measurements with field-adjustable kit

Detailed Product Guide

For questions about retrofit solutions, contact the Lincoln Flex Center at 800-330-6479 or flexcenterlincoln@eaton.com. Be sure to provide width, height and depth of panel.

Standards and Certifications

Meets 2008/2011/2014 NEC wire bending requirements.

1

CH Specialty Product Selection

To select the retrofit kit:

1. From the existing box size determine which retrofit groups are suitable (may be more than one).
2. Use type of interior, number of phases, and type of main to find the selection chart.
3. Select part number from chart (if main breaker, replace XXX with specific amp rating).
4. Note that the overlap of the existing wall is the retro cover size minus the existing box size. If specific measurements are needed, communicate that you need a custom trim size.
5. Contact the Lincoln Flex Center at 800-330-6479 for pricing, lead-times, and order entry instructions.

How to Order:

1. Measure the existing panel enclosure to determine appropriate kits for your project.
2. Match the existing dimensions with the table below to obtain the correct catalog number.
3. Order your retrofit kit from a local Eaton authorized distributor.

Need assistance or can't find retrofit to fit existing enclosure?

Email or call Eaton's Residential Flex Center at 1-800-330-6479 for all your retrofit needs. Go to www.eaton.com/eccn to locate an Eaton Certified Contractor.

Retrofit Interior Kit Specifications

Five recommended groups: existing box height determines retro group size. Approximate Dimensions in Inches (mm).

		Existing Enclosure Parameters—Inches (mm)									
Catalog Number ①	**Cover ②**	**Minimum Depth**	**Maximum Depth**	**Minimum Width**	**Minimum Height**	**Phase**	**Main**	**Bus**	**Amperes ③**	**Spaces / Circuits**	**UL 67 Listed**
CH Retrofit Interiors and Covers											
RWCH6L125N	**CRWCH6ML******	3.13 (79.5)	4.13 (104.9)	7.00 (177.8)	8.50 (215.9)	Single	MLO	CH	125	6	No
RSCH10B125N	**CRWCH12ML******	3.50 (88.9)	4.50 (114.3)	8.50 (215.9)	16.50 (419.1)	Single	MCB	CH	125	10	No
RSCH12L125N	**CRWCH12ML******	3.50 (88.9)	4.50 (114.3)	8.50 (215.9)	16.50 (419.1)	Single	MLO	CH	125	12	No
RACH22B125J	**CRACH24ML******	3.75 (95.3)	4.25 (108.0)	13.00 (330.2)	21.00 (533.4)	Single	MCB	CH	125	22	No
RACH24L125J	**CRACH24ML******	3.75 (95.3)	4.25 (108.0)	13.00 (330.2)	21.00 (533.4)	Single	MLO	CH	125	24	No
RBCH24B200_	**CRBCH24CS******	3.75 (95.3)	6.00 (152.4)	13.00 (330.2)	29.00 (736.6)	Single	MCB	CH	200	24	No
RBCH32L200_	**CRBCH32ML******	3.75 (95.3)	6.00 (152.4)	13.00 (330.2)	29.00 (736.6)	Single	MLO	CH	200	32	No
RCCH32B200_	**CRBCH32CS******	3.75 (95.3)	6.00 (152.4)	13.00 (330.2)	34.00 (863.6)	Single	MCB	CH	200	32	No

Notes

① Catalog numbers shown with "_" at the end need one of the following suffixes to denote depth:
J = 3.75–4.25
K = 4.25–5.00
L = 5.00–6.00
Example: RBCH24B200J would signify an interior set with a depth range of 3.75 to 4.25 inches.

② ****Denotes characters in the catalog number that relate to overall cover size.
Example: CRWCH6ML2620 would signify a cover 26.00 inches H x 20.00 inches W, or CRBCH24CS3324 would be 33.00 inches H x 24.00 inches W.

③ Amperes for MB panels is maximum; catalog number will reflect actual amperage of breaker included.

For UL applications, maximum cover sizes may apply.

Complete Assembly

Note: For complete assembly, interior and cover need to be ordered separately.

Adjustable Interior

- Factory installed ground and neutral bars positioned to accept existing wires
- Field adjustable depth matches existing panel box
- Adjustable height enables optional placement of the interior
- Field bondable for service entrance options

Adjustable Interior

Standard Trim and Collar

- Standard trim matches new interior
- New circuit directory for updated labeling
- Oversized collar eliminates expensive wall/paint repair

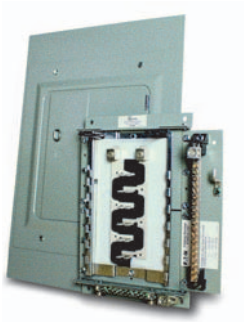

Collar and Assembly with Trim

Single-Phase—Main Lug Loadcenters, Non-Metallic

2460SNM

Single-Phase Three-Wire—120/240 Vac—Insulated/Bondable Neutral

Main Ampere Rating	Maximum Number 1-Inch (25.4 mm) Spaces	Circuits	Enclosure Type	Trim Type	Box Size	Wire Size Range Cu/Al 60 °C or 75 °C for Main Lugs	Loadcenter Catalog Number
40 ①	2	4	Indoor	Flush (no door)	2	②	**TT120FLGNM** ②③
	2	4	Indoor	Surface (no door)	2		**TT120SLGNM** ②③
60	2	4	Indoor	Flush (no door)	2	#14–2	**2460FNM**
	2	4	Indoor	Surface (no door)	2		**2460SNM**
	2	4	Indoor	Flush (no door)	2		**2460FGNM** ③
	2	4	Indoor	Surface (no door)	2		**2460SGNM** ③
	2	4	Outdoor	—	—		**2460RNM-A2**

Notes

① Suitable for use as service equipment when not more than six main disconnecting means are provided and when not used as a lighting and appliance panelboard (see Article 408.34 of the NEC).

② This device has no main lugs. A Type BR or BD breaker is required to be backfed to supply power to branch breakers. This device is single-phase 120 Vac only. With the use of three Type BR breakers, there are two branch circuits available. With the use of three Type BD breakers, there are five branch circuits available.

③ Includes GB4NM ground bar.

1

CH Loadcenter Options and Accessories

CHSF2125

CHSF3125

CHFP

TDL

BINA

Field Installation and Parts

Description	Ordering Quantity ①	Catalog Number
Sub-feed lug blocks—two-pole, 125 A, 3/4-inch (19.1 mm) spaces needed	1	**CHSF2125**
Sub-feed lug blocks—three-pole, 125 A, 3/4-inch (19.1 mm) spaces needed	1	**CHSF3125**
Neutral/ground lug—add-on neutral or ground lug	1	**NL20**
	1	**NL30**
	1	**NL300**
Filler plates—3/4-inch (19.1 mm) space circuit breaker space	25	**CHFP**
CSR main circuit breaker filler plate (with hardware)	1	**CSRFP**
Door lock—12–42 circuits, and 100–225 A	1	**TDL**
Sandlewood spray paint	1	**SPCSW**
ANSI-61 light gray touchup paint for outdoor loadcenters	1	**SPC61**
Isolated neutral assembly (computer circuits)	1	**BINA**
Circuit directory—adhesive backed	10	**TCD**
Cover screws	25	**LCCS**
Cover replacement latch 14-5/16 inch (363.55 mm) wide loadcenters only	1	**CHRLS**
Circuit marking strip (next to breakers)	10	**CHMS**
Circuit identification label (preprinted breaker labels next to breakers)	25	**CHBL**
Series rated caution label	25	**SRL**
Branch circuit numbering strip	20	**CHNS**
Bonding strap with screw	1	**BSSUSE**
CH plug-on neutral ground bonding strap	1	**BSCHPON**

Note

① Must be purchased in multiples of ordering quantities indicated.

Mechanical Interlock Covers

Covers mechanically interlock two breakers. Type A covers interlock two CH breakers mounted across from one another. Type B covers interlock a main Type CSR breaker with a Type CH.

CH8BRM Type A

CH8EFM Type B

Mechanical Interlocks

Type	Fits Loadcenter Catalog Numbers	Mechanical Interlock Trim/Deadfront Catalog Numbers: Flush	Surface
A	CH12L125B	CH8BFM	CH8BSM
	CH16L125B		
	CH12L3125B		
	CH14B100B		
	CH20L125C	CH8CFM	CH8CSM
	CH24L125C		
	CH18L3125C		
	CH24L3125C		
	CH22B100C		
	CH22N100C		
	CH24L150D	CH8DFM	CH8DSM
	CH32L150D		
	CH24L3225D		
	CH30L3150D		
	CH42L225G	CH8GFM	CH8GSM
	CH42L3225G		
	Inner cover of Box B raintight	—	CH8BRM
	Inner cover of Box C raintight	—	CH8CRM
Indoor			
B	CH24B150E	CHEFM	CHESM
	CH24B200E		
	CH32B150J	CH8JFM	CH8JSM
	CH32B200J		
	CH3242B200J		
	CH32N200J		
	CH32B225J		
	CH42B200K	CH8KFM	CH8KSM
	CH42N200K		
	CH42B225K		
	CH60BPN200N	CH8NFM	—
Outdoor			
B	CH8B150RF	CH3RDF7M	—
	CH8B200RF		
	CH8N200RF		
	CH24B150R		
	CH24B200R		
	CH32B150R	CH3RDF9M	—
	CH32B200R		
	CH32N200R		
	CH32B225R		
	CH42B200R	CH3RDF10M	—
	CH42N200R		
	CH42B225R		

CH8BRM Type A

CH8EFM Type B

Mechanical Interlocks, continued

Type	Fits Loadcenter Catalog Numbers	Mechanical Interlock Trim/Deadfront Catalog Numbers: Flush	Surface
Next Generation Power Center			
B	CHPC32B150L	CHPC8B32LFM	—
	CHPC32B200L		
	CHPC32N200L		
	CHPC42B150L	CHPC8B42LFM	—
	CHPC42B200L		
	CHPC42N200L		
	CHPC32B125TR	CH3RDF15M	—
	CHPC32B150TR		
	CHPC32B200TR		
	CHPC32N200TR		
	CHPC42B150TR	CH3RDF16M	—
	CHPC42B200TR		
	CHPC42N200TR		
	CHPC32B150TR	CH3RDF17M	—
	CHPC32B200TR		
	CHPC42B200BR	CH3RDF18M	—
Vintage ①			
	CH20JJM200	CH7JJFREPLM	—
	CH24JJM150		
	CH30JJM150		
	CH30JJM200		
	CH30JJM150H		
	CH3040JJMM200		
	CH304JJM150		
	CH304JJM200		
	CH304JJM200H		
	CH30KKM225	CH7KKFREPLM	—
	CH40KKM200H		
	CH40KKM225		
	CH40KKM200H		
	CH40KKM225H		
	CH304KKM200		
	CH304KKM200H		
	CH304LLM225	CH7LLFREPLM	—
	CH424LLM225H		

Note

① If vintage part number does not match exactly, the cover may not fit. Simple variations such as an "N" at the end of the part number contain minor design variations that will prevent our cover from working with that particular loadcenter.

DS100H1

Field Installation Rainproof Conduit Hubs

Description	Conduit Size Inches (mm)	Ordering Quantity ①	Catalog Number
Group 1—for use with 70, 100 and 125 A MLO and MCB loadcenters and circuit breaker enclosures	0.75 (19.1)	1	**DS075H1**
	1.00 (25.4)	1	**DS100H1**
	1.25 (31.8)	1	**DS125H1**
	1.50 (38.1)	1	**DS150H1**
	2.00 (50.8)	1	**DS200H1**
Group 2—for use with 150, 200 and 225 A MLO and MCB loadcenters and circuit breaker enclosures	2.00 (50.8)	1	**DS200H2**
	2.50 (63.5)	1	**DS250H2**
	3.00 (76.2)	1	**DS300H2**
Adapter kit—allows installing a Group 1 hub on devices arranged for Group 2 hubs	—	1	**DS900AP**
Group 1—small blank hub closure plate	—	1	**DS900CP1**
Group 2 —large blank hub closure plate	—	1	**DS900CP2**

GBK14

Ground Bar Kits

Description (See Legend)	Length Inches (mm)	Ordering Quantity ②	Catalog Number
●○○○○●○	2.54 (64.5)	1	**GBK5** ②
●○○○○●○■	3.59 (91.2)	1	**GBK520** ②
●○○○○●○○○○○○	4.29 (109.0)	1	**GBK10** ②
●○○○○●○○○○○○■	5.34 (135.6)	1	**GBK1020** ②
◒●◒◒◒⬓◒●◒⬓◒◒◒	4.61 (117.1)	1	**GBK13** ②
●○○○○●○○○○○○○○○	5.69 (144.5)	1	**GBK14** ②
●○○○○●○○○○○○○○○■	6.74 (171.2)	1	**GBK1420** ②
●○○○○●○○○○○○○○○○○○○○○	8.14 (206.8)	1	**GBK21** ②
●○○○○●○○○○○○○○○○○○○○○○○■	9.19 (233.4)	1	**GBK2120** ②
○○○○○○○○●○○○○○○●○○○○○○○	7.94 (201.7)	1	**CH9GP21** ③④

Ground Bar Legend

○ = (3) #14–#10 Cu/Al or (1) #14–#4 Cu/Al
■ = (1) #6–2/0 Cu/Al
⬓ = (1) 1/0–14 or (3) #10–12 Cu/Al
◒ = (1) #14–1/0 Cu/Al or (3) #14–#10 Cu/Al
● = Mounting hole

Grounded "B" Phase Adapters

Maximum Amperes	Three-Phase Loadcenter Types of Panels	Kit Catalog Number ⑤
125	12–32 circuit main lug	**CHGRD1**
225	Main lug and CHH main breaker panels	**CHGRD2**
	CC main CB panels	**CHGRD3**

Neutral Bar Accessories

Description	Catalog Number ⑤
Replacement neutral for all B and C type boxes	**CHN125C**
Replacement neutral for all D type boxes	**CHN125D**
Replacement neutral for all E, G, J, K and L type boxes	**CHN225L**
Isolated Neutral Assembly (computer circuits)	**BINA**

Notes

① Must be purchased in multiples of ordering quantities indicated.
② Distance between mounting holes is 1-3/4 inches (44.5 mm).
③ For single- and three-phase 400 A loadcenters.
④ Distance between mounting holes is 2-13/32 inches.
⑤ Cannot be used in Safety Breaker Panels. Classic Plus Panels only.

Decorator Cover Accessory

- For easy use with CH loadcenters mounted in living space
- Easily wallpapered or painted to match any decor
- Loadcenter accessory—exclusively from Eaton

Now you see it …

… Now you don't.

Decorator Cover Accessory ①

Catalog Number Corresponding Cover	Existing CH Loadcenter Cover
CH8BF	**CH8KDNB**
CH8CF	**CH8KDNC**
CH8DF/EF	**CH8KDND**
CH8GF/JF	**CH8KDNJ**
CH8KF	**CH8KDNK**

Loadcenter Goof Collars

Don't let an ugly drywall problem ruin a beautiful electrical installation.

Eaton's Goof Collar is designed to cover gaps between the finished drywall and loadcenter enclosure. This is often necessary when upgrading the electrical service and the drywall surrounding the panel is damaged. The collar allows 2 inches of overhang beyond the standard flush trim.

Before

After

CH Goof Collars

Inches (mm) Height	Width	Catalog Number Loadcenter Cover	Goof Collar
21.00 (533.4)	19.00 (482.6)	**CH8BF**	**CH8BFC1921**
26.00 (660.4)	19.00 (482.6)	**CH8CF**	**CH8CFC1926**
34.00 (863.6)	19.00 (482.6)	**CH8DF**	**CH8DFC1934**
		CH8EF	
		CHSUR8EF	
39.00 (990.6)	19.00 (482.6)	**CH8GF**	**CH8JFC1939**
		CH8JF	
42.00 (1066.8)	19.00 (482.6)	**CH8KF**	**CH8KFC1942**
		CHSUR8KF	
44.00 (1117.6)	19.00 (482.6)	**CH8LF**	**CH8LFC1944**
		CHSUR8LF	

BR Goof Collars

Inches (mm) Height	Width	Catalog Number BR Box Size	Goof Collar
21.00 (533.4)	19.00 (482.6)	**B1**	**BRB2GC2319**
23.00 (584.2)	19.00 (482.6)	**B2**	**BRB1GC2119**
25.00 (635.0)	19.00 (482.6)	**C1**	**BRC1GC2519**
27.00 (685.8)	19.00 (482.6)	**C2**	**BRC2GC2719**
31.00 (787.4)	19.00 (482.6)	**C4**	**BRC4GC3119**
34.00 (863.6)	19.00 (482.6)	**D1**	**BRD1GC3419**
38.00 (965.2)	19.00 (482.6)	**G1**	**BRG1GC3819**
43.00 (1092.2)	19.00 (482.6)	**L1**	**BRL1G4319**
48.00 (1219.2)	19.00 (482.6)	**L2**	**BRL2GC4819**

Note

① For goof collars not listed in the table, please contact the Lincoln Flex Center at 1-800-330-6479.

Dimensions

Approximate Dimensions in Inches (mm)

Residential/Commercial/Unit Enclosure—Box Sizes

Note: Box sizes do not include covers/fronts.

Residential Loadcenters

Box Size	Height	Width	Depth
NEMA Type 1 Indoor			
5	9.50 (241.3)	4.50 (114.3)	3.13 (79.4)
6	11.38 (288.9)	6.88 (174.6)	3.39 (86.1)
7	13.00 (330.2)	11.00 (279.4)	3.69 (93.7)
B	16.75 (425.5)	14.31 (363.5)	3.88 (98.4)
C	21.00 (533.4)	14.31 (363.5)	3.88 (98.4)
D	29.13 (739.8)	14.31 (363.5)	3.88 (98.4)
E	29.13 (739.8)	14.31 (363.5)	3.88 (98.4)
G	34.13 (866.8)	14.31 (363.5)	3.88 (98.4)
J	34.13 (866.8)	14.31 (363.5)	3.88 (98.4)
K	37.00 (939.8)	14.31 (363.5)	3.88 (98.4)
L	39.00 (990.6)	14.31 (363.5)	3.88 (98.4)
N	45.00 (1143.0)	14.31 (363.5)	3.88 (98.4)
NEMA Type 3R Outdoor			
5R	9.50 (241.3)	4.50 (114.3)	3.13 (79.4)
6R	11.75 (298.5)	6.50 (165.1)	4.50 (114.3)
7R	13.00 (330.2)	11.00 (279.4)	3.69 (93.7)
B	16.75 (425.5)	14.31 (363.5)	5.19 (131.8)
C	21.00 (533.4)	14.31 (363.5)	5.19 (131.8)
D	29.13 (739.8)	14.31 (363.5)	5.19 (131.8)
E	29.13 (739.8)	14.31 (363.5)	5.19 (131.8)
G	34.13 (866.8)	14.31 (363.5)	5.19 (131.8)
J	34.13 (866.8)	14.31 (363.5)	5.19 (131.8)
K	37.00 (939.8)	14.31 (363.5)	5.19 (131.8)
L	39.00 (990.6)	14.31 (363.5)	5.19 (131.8)

Commercial Loadcenters

Box Size	Height	Width	Depth
NEMA Type 1 Indoor			
P	54.38 (1381.1)	21.00 (533.4)	6.00 (152.4)
PM	62.63 (1590.7)	21.00 (533.4)	6.00 (152.4)

Types ECB and ECC Unit Enclosures

Height	Width	Depth
NEMA Type 1 Indoor		
23.25 (590.6)	8.88 (225.4)	4.50 (114.3)
NEMA Type 3R Outdoor		
23.69 (601.7)	9.31 (236.5)	5.44 (138.1)

Residential Loadcenter Knockout

Residential NEMA Type 1 Indoor and NEMA Type 3R Outdoor Enclosures.

Knockouts for Box Sizes 5, 6, 7, 5R, 6R, 7R

Code	Diameter			
A	0.50 (12.7)	—	—	—
B	0.50 (12.7)	0.75 (19.1)	—	—
C	0.50 (12.7)	0.75 (19.1)	1.00 (25.4)	—
D	0.50 (12.7)	0.75 (19.1)	1.00 (25.4)	1.25 (31.8)
E	0.75 (19.1)	1.00 (25.4)	1.25 (31.8)	—
F	0.75 (19.1)	1.00 (25.4)	1.25 (31.8)	1.50 (38.1)
G	1.00 (25.4)	1.25 (31.8)	1.50 (38.1)	—
H	1.00 (25.4)	1.25 (31.8)	1.50 (38.1)	2.00 (50.8)
I	1.25 (31.8)	1.50 (38.1)	2.00 (50.8)	—

Knockout Positions

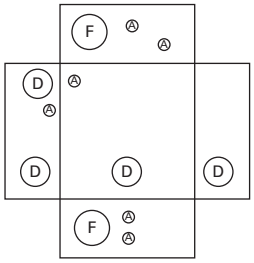

Box 5

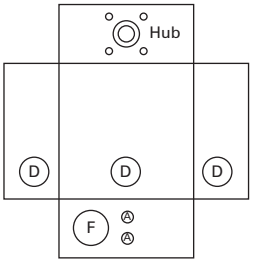

Box 5R

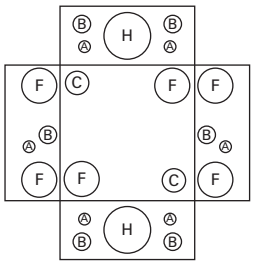

Box 6

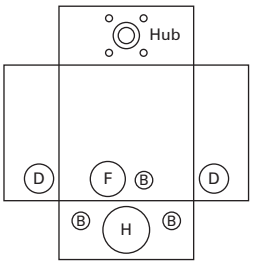

Box 6R

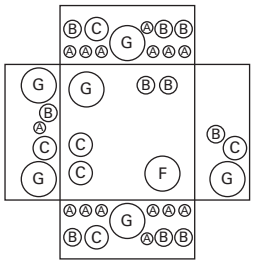

Box 7

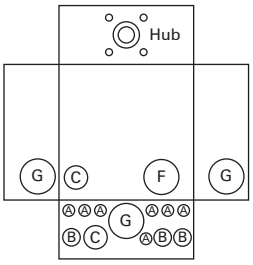

Box 7R

Approximate Dimensions in Inches (mm)

Residential and Commercial Loadcenter Knockout

Residential NEMA Type 1 indoor and NEMA Type 3R outdoor enclosures.

Knockouts for Box Sizes 8, 8R, P, PM, B, C, D, E, G, J, K, L, N and Outdoor Boxes 12–60 Circuits

Code	Diameter				
a	0.75 (19.1)	—	—	—	—
b	0.50 (12.7)	0.75 (19.1)	—	—	—
c	0.50 (12.7)	—	—	—	—
d	1.00 (25.4)	1.25 (31.8)	1.50 (38.1)	2.00 (50.8)	2.50 (63.5)
e	1.25 (31.8)	1.50 (38.1)	2.00 (50.8)	2.50 (63.5)	—
f	0.75 (19.1)	1.25 (31.8)	1.50 (38.1)	2.00 (50.8)	—
g	0.50 (12.7)	0.75 (19.1)	1.00 (25.4)	—	—
h	1.50 (38.1)	2.00 (50.8)	2.50 (63.5)	—	—
i	0.50 (12.7)	0.75 (19.1)	1.00 (25.4)	1.25 (31.8)	1.50 (38.1)
j	1.00 (25.4)	1.25 (31.8)	1.50 (38.1)	—	—
k	1.25 (31.8)	1.50 (38.1)	2.00 (50.8)	—	—
m	0.75 (19.1)	1.00 (25.4)	1.25 (31.8)	1.50 (38.1)	2.00 (50.8)
n	0.75 (19.1)	1.00 (25.4)	1.25 (31.8)	1.50 (38.1)	—
p	2.00 (50.8)	2.50 (63.5)	—	—	—

Knockout Diagram

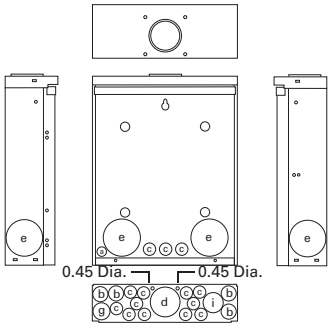

Outdoor Boxes
12–42 Circuits 225 A Maximum

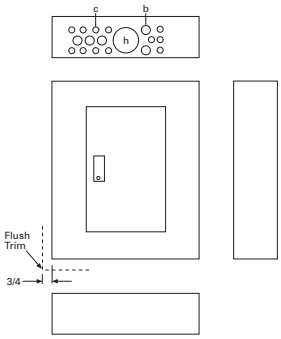

Box P, PM

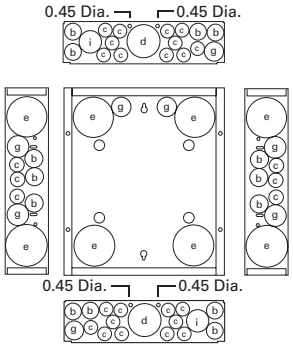

Box B

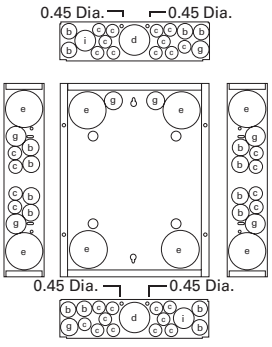

Box C, D, E, G, J, K, L, N

Type ECB and ECC Unit Enclosure Knockout

Code	Diameter				
NEMA Type 1 Indoor (Flush and Surface Trims)					
A	0.50 (12.7)	—	—	—	—
B	1.25 (31.8)	1.50 (38.1)	1.75 (44.5)	2.00 (50.8)	2.50 (63.5)
NEMA Type 3R Outdoor					
A	0.50 (12.7)	—	—	—	—
B	1.25 (31.8)	1.50 (38.1)	1.75 (44.5)	2.00 (50.8)	2.50 (63.5)

NEMA Type 1—Indoor

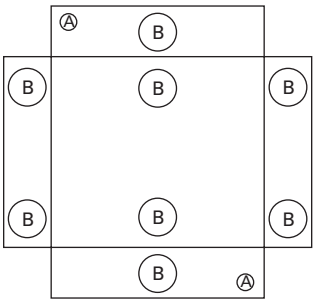

NEMA Type 3R—Outdoor

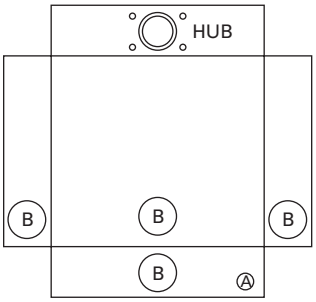

Technical Data and Specifications

General

A. The Contractor shall furnish and install loadcenters incorporating circuit breakers of the number, rating and type as specified herein and as shown on the contract drawings.

B. The loadcenter and all components shall be designed, manufactured and tested in accordance with the latest applicable standards of UL and NEMA including:

1. UL 67—standards for panelboards
2. UL 50—standards for cabinets and boxes
3. UL 489—standards for molded case circuit breakers
4. Federal Spec Classification W-C 375
5. UL 1699—all fault interrupting

Qualifications

A. The manufacturer of the loadcenter shall be the manufacturer of the circuit breaker within the load center. All breakers shall be full size.

B. For the equipment specified herein, the manufacturer shall be ISO® 9000 certified.

C. The manufacturer of this equipment shall have produced similar electrical equipment for a minimum period of seven (7) years.

Manufacturers

A. Eaton

Ratings

A. Loadcenters shall be rated for 240 Vac and shall have short-circuit ratings as shown on the drawings or as herein scheduled, but not less than 10,000 amperes rms symmetrical.

B. Breakers shall be full size and a minimum of 125 A frame. Breakers 10 –125 A trip size shall take up the same pole spacing.

C. Loadcenters shall be labeled with a UL short-circuit rating. When series ratings are applied with integral or remote devices, a label shall be provided. Series ratings shall cover all trip ratings of installed frames. It shall state the conditions of the UL series ratings including:

1. Size and type of upstream device.
2. Branch devices that can be used.
3. UL series short-circuit rating.

Construction

A. All interiors, with the exception of the branch circuit breakers shall be completely factory assembled with main breakers, main lugs or no main device.

B. Interiors shall be so designed that circuit breakers can be replaced without disturbing adjacent units and without removing the main bus connectors and shall be so designed that circuits may be changed without machining, drilling or tapping.

C. Physical means must be provided to prevent the installation of more overcurrent devices than that number for which the enclosure was designed. Full size breakers are required.

Bus

A. Busbars for the main and cross connectors shall be of silver flash plated copper construction in accordance with UL standards. Bussing shall be braced to 65 kAIC.

B. Neutral bussing shall have a suitable lug for each outgoing feeder requiring a neutral connection of same ampacity as branch.

Wiring/Termination

A. All wire connectors and terminals shall be of the anti-turn solderless type and suitable for copper or aluminum wire of the sizes indicated. All connectors shall meet the "Requirements for Wire Connectors and Soldering Lugs" UL 486B.

B. All loadcenters where marked shall be suitable for use with 60/75 °C rated wire.

Circuit Breakers

A. Circuit breakers shall be molded case type, 3/4-inch (19.1 mm) wide per pole. Multipole circuit breakers shall be of a stack pole design to provide electrical phase isolation and have an internal common trip.

B. Each pole of the circuit breaker will have inverse time delay overload and instantaneous short-circuit protection by means of both thermal and magnetic sensors. Circuit breakers shall be quick-make/quick-break.

C. The circuit breaker calibration shall not be affected by environmental changes in relative humidity. Breakers shall be calibrated after assembly.

D. All circuit breakers shall be operated by a toggle-type handle and multipole circuit breakers shall have an internal common trip mechanism. The circuit breakers shall incorporate trip mechanisms that are mechanically trip-free from the handle. The handle position shall provide good visual trip indication.

E. Contacts shall be of non-welding silver alloy.

F. All branch breaker handles shall be of a different color than the case of the breaker.

G. All terminals shall be listed for use with copper or aluminum conductors. Terminals shall be of the box lug design. The terminals shall meet UL 486B requirements and shall be suitable for use with either 60 °C or 75 °C wire.

H. Breakers shall be SWD rated and/or HACR rated as required.

I. Arc fault interrupting circuit breakers, (AFC), shall be provided on all 15 and 20 A single-phase 120/240 Vac circuits except those indicated as remote controlled breakers. AFI breakers shall be "Classified for mitigating the effects of arcing faults," or conforming to UL Standard 1699 and as defined by per Article 210.12 Section A of the NEC Code.

Enclosures

A. Loadcenters shall have NEMA 1 general purpose or NEMA 3R rainproof enclosures as indicated on the drawings and shall be surface or flush mounted except where noted.

B. For indoor applications, enclosures shall be rated NEMA 1. Enclosures shall be manufactured from cold-rolled code-gauge sheet steel having multiple knockouts and painted per paint specification. For outdoor applications, enclosures shall be rated NEMA 3R. Enclosures shall be manufactured from galvanized steel which shall be painted per the painted as specified. Enclosures shall be of sufficient size to meet or exceed NEC wire bending space.

C. The cover shall have an easy adjustment feature for flush applications.

D. Boxes shall be factory assembled into a single rigid structure.

E. Provide circuit breaker marking labels and directories.

Finish

A. Boxes and trims shall be finished with a high scratch-resistant aesthetically pleasing finish. The finish shall be polyurethane coating electrostatically applied to a thickness of 1.8 to 2 mils.

All loadcenters shall be provided with provisions for accepting a paintable or wall paperable decorator accessory cover. Where loadcenters are installed in living areas, provide manufacturer designed and tested decorator cover kits.

Plug-On Circuit Breakers

Contents

Description	*Page*
Overview	**V1-T1-2**
CH Specialty Products	**V1-T1-14**
CH Loadcenter Options and Accessories	**V1-T1-22**
CH Circuit Breakers	
Product Selection	**V1-T1-32**
Options and Accessories	**V1-T1-38**
Technical Data and Specifications	**V1-T1-40**
Wiring Diagrams	**V1-T1-40**

CH Circuit Breakers

Product Description

Quick-make, quick-break switch mechanism combined with inverse time element tripping operation and trip-free handle design. Type CH circuit breakers trip to the OFF position, eliminating nuisance callbacks. The CHF family also includes a trip flag to differentiate between a trip and the breaker being turned off. The thermal-magnetic trip curve avoids nuisance tripping on mild overloads while reacting almost instantaneously to severe short-circuit conditions. Multipole breakers have internal common trip connection to operate all poles simultaneously. Handles are marked with ON-OFF indication and ampere rating of the breaker.

Special Application Plug-On Circuit Breakers—Type CH 10 kAIC 120 Vac and 120/240 Vac

Branch Feeder Type Arc Fault Circuit Breakers
A branch feeder type arc fault circuit interrupter is a device intended to mitigate high current arcing faults in the complete circuit, including connected cords. High current arcing faults can occur from line to neutral or line to ground. These arcing faults are in parallel with the load and produce the most energy of all arcing faults.

The branch feeder type AFCI is required in the 1999 and 2002 National Electrical Code.

The Combination Type AFCI is required in all subsequent editions of the National Electrical Code.

Combination Type Arc Fault Circuit Breakers
A combination type arc fault circuit interrupter is a device that offers mitigation of high current arcing faults in the complete circuit, including connected cords. In addition it provides direct detection of persistent low current arcing faults down to 5 amps with associated mitigation of fire hazards in the cords connected to the outlets. High current arcing faults can occur from line to neutral or line to ground. These arcing faults are in parallel with the load and produce the most energy of all arcing faults. The current level of low current arcing faults is limited by the load.

Ground Fault Circuit Breakers—Ground Fault Application Notes
Single-pole Type CHGFIs are designed for use in two-wire, 120 Vac circuits. The diagram on **Page V1-T1-40** shows a typical wiring configuration.

Two-pole Type CHGFIs are designed for use in three-wire, 120/240 Vac circuits, 120 Vac multiwire circuits employing common, neutral and two-wire, 240 Vac circuits obtained from a 120/240 Vac source.

Diagrams on **Page V1-T1-40** illustrate typical wiring configurations for 120/240 Vac multiwire circuits.

The diagram on **Page V1-T1-40** depicts a 240 Vac, two-wire circuit. Note the "panel neutral" conductor connects to the neutral bar, even though the neutral is not included in the load circuit. This connection is necessary to supply a 120 Vac power source to the ground fault sensing circuit.

The figures are shown with a 120/240 Vac, single-phase, three-wire power source, but are also applicable to a 120/208 Vac, three-phase, four-wire power supply. For all figures, the electrical operation of the Type CHGFI is not affected by the equipment ground.

Features

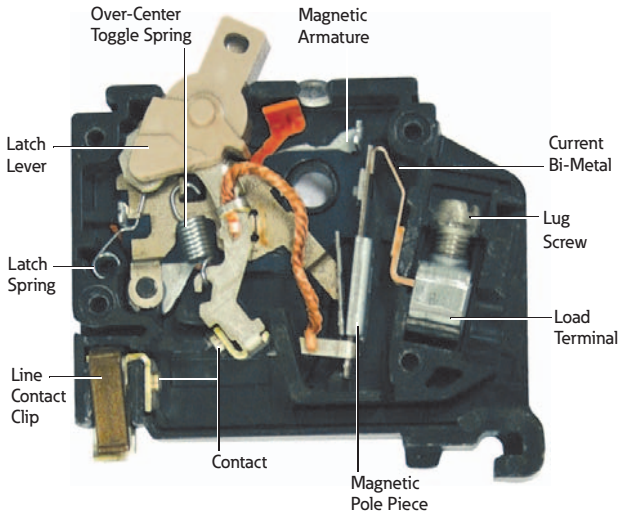

1

Product Selection

10 kAIC, 120 Vac, 120/240 Vac and 240 Vac

Type CH Plug-On Circuit Breakers

Type CH Breakers, 3/4-Inch (19.1 mm) per Pole 120, 120/240 or 240 Vac, 10 kAIC

Ampere Rating	Wire Size Range Cu/Al 60 °C or 75 °C	Catalog Number Single-Pole 120/240 Vac Requires One 3/4-Inch (19.1 mm) Space 10 per Shelf Carton	Two-Pole 120/240 Vac Common Trip Requires Two 3/4-Inch (19.1 mm) Spaces 5 per Shelf Carton	Three-Pole 240 Vac Common Trip Requires Three 3/4-Inch (19.1 mm) Spaces 5 per Shelf Carton
10	(1) #14–8 ① (2) #14–10 ①② (1) #14–6 ③	**CH110**	**CH210**	**CH310**
15		**CH115** ⑦⑧	**CH215** ⑧	**CH315** ⑧
20		**CH120** ⑦⑧	**CH220** ⑧	**CH320** ⑧
25		**CH125** ⑧	**CH225** ⑧	**CH325** ⑧
30		**CH130** ⑧	**CH230** ⑧	**CH330** ⑧
35	#14–2 ① #14–6 ③	**CH135** ⑧	**CH235** ⑧	**CH335** ⑧
40	#10–1/0 ④ #14–2 ⑤ #3/0 ⑥	**CH140** ⑧	**CH240** ⑧	**CH340** ⑧
45		**CH145** ⑧	**CH245** ⑧	**CH345** ⑧
50		**CH150** ⑧	**CH250** ⑧	**CH350** ⑧
60		**CH160**	**CH260**	**CH360**
70		**CH170**	**CH270**	**CH370**
80		—	**CH280**	**CH3080**
90		—	**CH290**	**CH3090**
100		—	**CH2100**	**CH3100**
110		—	**CH2110**	—
125		—	**CH2125**	—

Type CH Plug-On Circuit Breakers

CHF Breakers with Mechanical Trip Flag

Ampere Rating	Wire Size Range Cu/Al 60 °C or 75 °C	Catalog Number Single-Pole 120/240 Vac Requires One 3/4-Inch (19.1 mm) Space 10 per Shelf Carton	Two-Pole 120/240 Vac Common Trip Requires Two 3/4-Inch (19.1 mm) Spaces 5 per Shelf Carton
10	(1) #14–8 ① (2) #14–10 ①②	**CHF110**	**CHF210**
15		**CHF115** ⑦⑧	**CHF215** ⑧
20		**CHF120** ⑦⑧	**CHF220** ⑧
25		**CHF125** ⑧	**CHF225** ⑧
30		**CHF130** ⑧	**CHF230** ⑧
35	#14–2 ①	**CHF135** ⑧	**CHF235** ⑧
40	#10–1/0 ④ #14–2 ⑤	**CHF140** ⑧	**CHF240** ⑧
45		**CHF145** ⑧	**CHF245** ⑧
50		**CHF150** ⑧	**CHF250** ⑧

Notes

① For single- and two-pole breakers.
② Solid and stranded wire can be used together.
③ For three-pole breakers.
④ Single-pole 60–70 A, two-pole 80–125 A, three-pole 40–100 A.
⑤ Single-pole 40–50 A, two-pole 40–70 A.
⑥ Two-pole 150 A.
⑦ Switching duty rated.
⑧ HACR rated.

For factory-installed options, refer to **Page V1-T1-39.**

Type CH AF/GF Single-Pole Circuit Breaker

Type CH AFCI Single-Pole Circuit Breaker

Dual Purpose Arc Fault/Ground Fault 3/4-Inch (19.1 mm) Wide Circuit Breakers, Type CH, 120 Vac—10 kAIC ①②

Poles	Ampere Rating	Configuration	Catalog Number
Single-pole 10 kAIC	15	Combination AFCI GFCI	**CHFAFGF115** ③
	20	Combination AFCI GFCI	**CHFAFGF120** ③
Single-pole, plug-on neutral 10 kAIC	15	Combination AFCI GFCI	**CHFAFGF115PN**
	20	Combination AFCI GFCI	**CHFAFGF120PN**

Plug-On Branch Feeder Type Arc Fault Circuit Breakers, Type CH 10 kAIC, 120 Vac and 120/240 Vac

Type CH AFCI Single-Pole Circuit Breaker

Combination Type CH AFCI 3/4-Inch (19.1 mm) Wide Circuit Breakers

Poles	Ampere Rating	Catalog Number
Standard Pigtail		
Single-pole 10 kAIC	15	**CHFCAF115**
	20	**CHFCAF120**
Two-pole 10 kAIC	15	**CH215CAF**
	20	**CH220CAF**

Type CH AFCI Single-Pole Circuit Breaker

Branch Type CH AFCI 3/4-Inch (19.1 mm) Wide FIRE-GUARD® Circuit Breakers

Poles	Ampere Rating	Configuration	Catalog Number
Single-pole 10 kAIC	15	AFCI	**CH115AF** ③
	20	AFCI	**CH120AF** ③
Two-pole 10 kAIC ④⑤	15	AFCI common trip	**CH215AF**
	20	AFCI common trip	**CH220AF**

Plug-On Combination Type Arc Fault Circuit Breakers and Ground Fault, Type CH 10 kAIC, 120 Vac and 120/240 Vac ⑥

Type CH AFCI Single-Pole PON Combo Circuit Breaker

Combination Type CH AFCI 3/4-Inch (19.1 mm) and CHGFCI Circuit Breakers

Poles	Ampere Rating	Configuration	Catalog Number
Single-pole 10 kAIC	15	AFCI plug-on neutral	**CHFCAF115PN**
	20	AFCI plug-on neutral	**CHFCAF120PN**
	15	GFCI plug-on neutral	**CHFGF115PN**
	20		**CHFGF120PN**
	25		**CHFGF125PN**
	30		**CHFGF130PN**

Notes

① Breaker qualifies as combination arc fault, per UL 1699.
② Breaker qualifies as personnel protection ground fault, (5 mA) per UL 943.
③ Clamshell packaging available with CS modification code on the end of catalog number.
④ Common trip refers to two-pole 240 V load application sourced by 120/240 Vac (see diagram on **Page V1-T1-40**).
⑤ Independent trip refers to two-pole multi-wire, home run or shared neutral circuits (see diagrams on **Page V1-T1-40**).
⑥ Requires plug-on neutral loadcenter.

Plug-On Ground Fault Circuit Breakers, Type CH 10 kAIC, 120 Vac and 120/240 Vac

Type CH Single-Pole

Type CH Ground Fault Circuit Breakers (5 Milliampere) 3/4-Inch (19.1 mm) per Pole 120 Vac or 120/240 Vac,10 kAIC

Ampere Rating	Wire Size Range Cu/Al 60 °C or 75 °C ①	Catalog Number—1 per Shelf Carton Single-Pole 120 Vac Requires One 3/4-Inch (19.1 mm) Space	Two-Pole 120/240 Vac Common Trip Requires Two 3/4-Inch (19.1 mm) Spaces
15	#14–6	CHFGF115	CH215GF
20	#14–6	CHFGF120	CH220GF
25	#14–6	CHFGF125	CH225GF
30	#14–6	CHFGF130	CH230GF
35	#14–6	—	CH235GF
40	#14–6	—	CH240GF
45	#14–6	—	CH245GF
50	#14–6	—	CH250GF
60	#14–6 ①	—	CH260GF

Type CH Two-Pole

Type CH Ground Fault Equipment Protectors (30 Milliampere) 3/4-Inch (19.1 mm) per Pole 120 Vac or 120/240 Vac, 10 kAIC

Ampere Rating	Wire Size Range Cu/Al 60 °C or 75 °C ①	Catalog Number—1 per Shelf Carton Single-Pole 120 Vac Requires One 3/4-Inch (19.1 mm) Space	Two-Pole 120/240 Vac Common Trip Requires Two 3/4-Inch (19.1 mm) Spaces
15	#14–6	CHFEP115	CH215EPD
20	#14–6	CHFEP120	CH220EPD
25	#14–6	CHFEP125	—
30	#14–6	CHFEP130	CH230EPD
40	#14–6	—	CH240EPD
50	#14–6	—	CH250EPD
60	#14–6 ①	—	CH260EPD

Type CH Switching Neutral Breakers—10 kAIC, 120 Vac and 120/240 Vac

Used to open the neutral along power line(s) for applications of gas pumps.

CH220SW

3/4-Inch (19.1 mm) per Pole 120/240 or 240 Vac, 10 kAIC

Ampere Rating	Wire Size Range Cu/Al 60 °C or 75 °C	Catalog Number—1 per Shelf Carton Two-Pole 120 Vac Common Trip Requires Two 3/4-Inch (19.1 mm) Spaces (Hot leg) Neutral Out Neutral In	Three-Pole 120/240 Vac Common Trip Requires Three 3/4-Inch (19.1 mm) Spaces Phase Phase Neutral Out Neutral In
15	#14–8	CH215SW ②	CH315SW ③
20	#14–8	CH220SW ②	CH320SW ③
30	#14–8	CH230SW ②	CH330SW ③
40	#14–8	CH240SW ②	CH340SW ③
50	#14–8	CH250SW ②	CH350SW ③

Notes

① 60 A breaker listed for 75 °C Cu wire only.

② For circuit breakers with shunt trip, add ST suffix. Shunt trip requires one additional pole space.

③ Switching duty rated.

Type CH-HID Circuit Breakers—10 kAIC, 120 Vac, 120/240 and 240 Vac

Suitable for use in circuits for fluorescent and high intensity discharge lighting. Also suitable for HACR applications.

3/4-Inch (19.1 mm) per Pole 120 Vac, 120/240 and 240 Vac, 10 kAIC

Ampere Rating	Wire Size Range Cu/Al 60 °C or 75 °C	Single-Pole 120/240 Vac Requires One 3/4-Inch (19.1 mm) Space 10 per Shelf Carton Catalog Number	Two-Pole 240 Vac Common Trip Requires Two 3/4-Inch (19.1 mm) Spaces 5 per Shelf Carton Catalog Number	Three-Pole 240 Vac Common Trip Requires Three 3/4-Inch (19.1 mm) Spaces 5 per Shelf Carton Catalog Number
15	#14–8	**CH115HID**	**CH215HID** ①	**CH315HID**
20	#14–8	**CH120HID**	**CH220HID**	**CH320HID**
30	#14–8	**CH130HID**	**CH230HID**	**CH330HID**

Type CHT Twin 10 kAIC, 120/240 Vac, Universal CTL and Non-CTL Plug-On Circuit Breakers

Suitable for CTL and Non-CTL CH loadcenters.

Type CH and CHT Circuit Breakers Mounted in Twin Breaker Panel

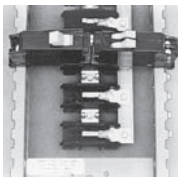

Twin (CTL) 3/4-Inch (19.1 mm) per Pole 120 Vac Class CTL 10 kAIC

Ampere Rating	Wire Size Range Cu/Al 60 °C or 75 °C	Single-Pole Requires One 3/4-Inch (19.1 mm) Space 10 per Shelf Carton Catalog Number 120/240 Vac 120/240 Vac
15–15	#14–8	**CHT1515** ②③
15–20	#14–8	**CHT1520** ②③
20–20	#14–8	**CHT2020** ②③

Notes

① CH215HID is rated for 120/240 V.
② Switching duty rated.
③ HACR rated.

Type CHP Commercial Breakers—10 kAIC, 120 Vac, 120/240 Vac and 240 Vac

Note: CHP breakers feature on-off and trip positions for commercial applications.

3/4-Inch (19.1 mm) per Pole 120, 120/240 or 240 Vac, 10 kAIC

Ampere Rating	Wire Size Range Cu/Al 60 °C or 75 °C	Single-Pole 120/240 Vac Requires One 3/4-Inch (19.1 mm) Space 10 per Shelf Carton Catalog Number	Two-Pole 120/240 Vac Common Trip Requires Two 3/4-Inch (19.1 mm) Spaces 5 per Shelf Carton Catalog Number	Three-Pole 240 Vac Common Trip Requires Three 3/4-Inch (19.1 mm) Spaces 5 per Shelf Carton Catalog Number
10	(1) #14–8 ① (2) #14–10 ①② (1) #14–6 ③	**CHP110**	**CHP210**	**CHP310**
15		**CHP115** ⑥⑦	**CHP215** ⑦	**CHP315** ⑦
20		**CHP120** ⑥⑦	**CHP220** ⑦	**CHP320** ⑦
25		**CHP125** ⑦	**CHP225** ⑦	**CHP325** ⑦
30		**CHP130** ⑦	**CHP230** ⑦	**CHP330** ⑦
35	#14–2 ① #14–6 ③	**CHP135** ⑦	**CHP235** ⑦	**CHP335** ⑦
40	#10–1/0 ④ #14–2 ⑤	**CHP140** ⑦	**CHP240** ⑦	**CHP340** ⑦
45		**CHP145** ⑦	**CHP245** ⑦	**CHP345** ⑦
50		**CHP150** ⑦	**CHP250** ⑦	**CHP350** ⑦
60		**CHP160** ⑦	**CHP260** ⑦	**CHP360** ⑦
70		**CHP170**	**CHP270**	**CHP370**
80		—	**CHP280**	—
90		—	**CHP290**	—
100		—	**CHP2100**	**CHP3100**
110		—	**CHP2110**	—
125		—	**CHP2125**	—

Type CHP-GFCI Circuit Breakers—10 kAIC, 120 Vac and 120/240 Vac

Note: CHP breakers offer on-off and trip positions for commercial applications.

5 Milliampere—3/4-Inch (19.1 mm) per Pole 120 V and 120/240 Vac, 10 kAIC

Ampere Rating	Wire Size Range Cu/Al 60 °C or 75 °C	Single-Pole 120 Vac Requires One 3/4-Inch (19.1 mm) Space 1 per Individual Carton Catalog Number
15	#14–6	**CHP115GF**
20	#14–6	**CHP120GF**
30	#14–6	**CHP130GF**

Notes

① For single- and two-pole breakers.
② Solid and stranded wire can be used together.
③ For three-pole breakers.
④ Single-pole 60–70 A, two-pole 80–125 A, three-pole 40–100 A.
⑤ Single-pole 40–50 A, two-pole 40–70 A.
⑥ Switching duty rated.
⑦ HACR rated.

CHP breakers offer on-off and trip positions for commercial applications.

Type CHP Neutral Switching Breakers—10 kAIC, 120 Vac and 120/240 Vac

Used to open the neutral along power line(s) for applications of gas pumps.

3/4-Inch (19.1 mm) per Pole 120 or 120/240 Vac, 10 kAIC

Ampere Rating	Wire Size Range Cu/Al 60 °C or 75 °C	Two-Pole 120 Vac Common Trip Requires Two 3/4-Inch (19.1 mm) Spaces 1 per Shelf Carton Catalog Number (Hot leg) Neutral Out Neutral In	Three-Pole 120/240 Vac Common Trip Requires Three 3/4-Inch (19.1 mm) Spaces 1 per Shelf Carton Catalog Number Phase Phase Neutral Out Neutral In
15	#14–8	**CHP215SW** ①	**CHP315SW** ①
20	#14–8	**CHP220SW** ①	**CHP320SW** ①

Type CH-M50 High Ambient Breaker

3/4-Inch (19.1 mm) per Pole 120 or 120/240 Vac, 10 kAIC

Ampere Rating	Wire Size Range Cu/Al 60 °C or 75 °C	Single-Pole 120/240 Vac Requires One 3/4-Inch (19.1 mm) Space 10 per Shelf Carton Catalog Number	Two-Pole 120/240 Vac Common Trip Requires Two 3/4-Inch (19.1 mm) Spaces 5 per Shelf Carton Catalog Number
15	(1) #14–8 (2) #14–10	**CH115M50**	**CH215M50**
20		**CH120M50**	**CH220M50**
25		**CH125M50**	**CH225M50**
30		**CH130M50**	**CH230M50**
35		**CH135M50**	**CH235M50**
40		**CH140M50**	**CH240M50**
45		**CH145M50**	**CH245M50**
50		**CH150M50**	**CH250M50**
60		—	**CH260M50**
70		—	**CH270M50**

Type CH-HM and CHP-HM High Magnetic Breakers

3/4-Inch (19.1 mm) per Pole 120 or 120/240 Vac, 10 kAIC

Ampere Rating	Wire Size Range Cu/Al 60 °C or 75 °C	Single-Pole 120/240 Vac Requires One 3/4-Inch (19.1 mm) Space 10 per Shelf Carton Catalog Number	Two-Pole 120/240 Vac Common Trip Requires Two 3/4-Inch (19.1 mm) Spaces 5 per Shelf Carton Catalog Number
15	(1) #14–8 (2) #14–10	**CH115HM**	**CH215HM**
20		**CH120HM**	**CH220HM**
15	(1) #14–8 (2) #14–10	**CHP115HM**	**CHP215HM**
20		**CHP120HM**	**CHP220HM**

Note

① For circuit breakers with shunt trip, add ST suffix. Shunt trip requires one additional pole space, obtain pricing from **Page V1-T1-39**.

1 Options and Accessories

CHHT

CHPL

CHPLGF

MCBPL

CHLO

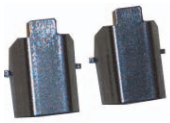

CH125RB

CH9MB270

CHML

Field Installation Kits and Parts

Description	Ordering Quantity ①	Catalog Number
Handle Ties ②		
Handle tie bar for physically joining the handles of two adjacent single-pole Type CH circuit breakers (molded plastic handle cover)	25	**CHHT**
Handle Lockoffs ③④		
Padlockable device for locking the handle of single-, two- or three-pole Type CH circuit breakers (escutcheon mounted) ⑤	1	**CHPL**
Padlockable device for locking the handle of a single-, two- or three-pole Type CHGFI circuit breaker (escutcheon mounted) ⑤	1	**CHPLGF**
Padlockable device for locking the handle of main circuit breaker Types CC and CCH into the ON or OFF position.(screw mounted) ⑥	1	**CCPL**
Padlockable device for locking the handle of main breaker Types BW and CSR into the ON or OFF position (escutcheon mounted) ⑤	1	**MCBPL**
Handle Lockdogs ④⑦		
Device used to secure handle in ON or OFF position for single-pole Type CH circuit breakers (handle mounted) ⑧	10	**CHLO**
Hold-Down Kits ⑨		
Hold-down retainer kit for single-, two-, three-pole Type CH circuit breakers. For 6–24 circuit 125 A single- and three-phase, 12–42 circuit single-phase 225 A and 24–42 circuit three-phase 225 A MLO Type CH loadcenters	1	**CH125RB**
Hold-down retainer kit for single-, two-, three-pole Type CH circuit breakers for 2–4 circuit MLO CH loadcenters.	1	**CH125RB24**
Mounting Bases		
Mounting base for two-pole Type CH circuit breaker—70 A maximum	1	**CH9MB270**
Main Breaker Lug Kits		
Types CC and CCH main breaker lug kit (2) 300 kcmil	1	**CCL300**
Type CSR main breaker lug kit (2) 300 kcmil	1	**MCBL300**
Mechanical Interlock		
Type CH for two-, three- and four-pole breakers	10	**CHML ⑩**

Notes

① Must be purchased in multiples of ordering quantities indicated.
② Handle ties: typically used to join two similar independent single-pole breakers to form a two-pole noncommon trip breaker.
③ Handle lockoffs: devices that use a padlock to lock the circuit breaker's handle in the ON or OFF position.
④ Requires one additional pole space.
⑤ Escutcheon mounted: device mounted semipermanently to the face of the circuit breaker and secured by the loadcenter deadfront.
⑥ Screw mounted: device permanently mounted to the face of the circuit breaker by the use of a non-removable screw.
⑦ Handle lockdogs: devices that are used to secure a circuit breaker's handle in the ON or OFF position. Handle lockdogs are not padlockable devices.
⑧ Handle mounted: device mounted above or below handle using spring pressure.
⑨ Hold-down kits: devices used to secure the circuit breaker to the loadcenter for back-feed main application. See NEC Article 384.16(g).
⑩ CHML not suitable to transfer emergency power.

Shunt Trip Options

Description Type	Volts	Catalog Number Suffix Adder ①
CSR	12 DC	**SR12**
CSR	24 DC	**SR24**
CSR	120 AC	**SR01**
CH	120 AC	**ST** ②
CC	12 DC	**SR12**
CC	24 DC	**SR24**
CC	120 AC	**SR01**
CC	208 AC	**SR08**
CC	240 AC	**SR02**

Handle Position Changeability Chart

	To Change Handle Position from ON to OFF or OFF to ON You Must...		
Handle Lockoff and Lockdog Types	**Remove Padlock**	**Remove Device**	**Remove Loadcenter Deadfront**
Lockoff escutcheon mounted	Remove	—	—
Lockoff screw mounted	Remove	—	—
Lockdog handle mounted	N/A	Remove	—

Notes

① Add suffix indicated to end of breaker catalog number.

② Requires one additional pole space.

Technical Data and Specifications

Ratings

Single- and two-pole CH breakers rated 15 and 20 A have low instantaneous magnetic trip levels. The 15 and 20 A breakers with "HM" suffix have high magnetic trip settings recommended for circuits with inherently high inrush currents. All Type CH breakers are marked for heating, air conditioning and refrigeration (HACR) equipment application. Single-pole 15–20 A breakers are also suitable for switching duty (SWD). Shunt trip coils operate on 120 Vac and require one additional pole space per breaker.

Wiring Diagrams

Typical Single-Pole

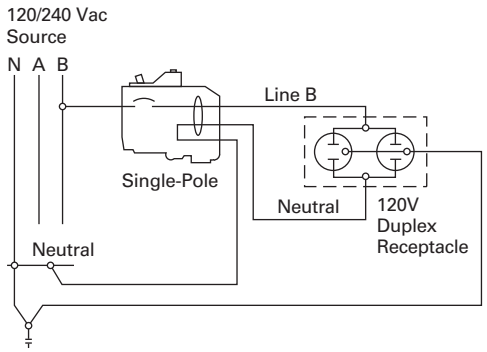

Two-Pole 240 V Load Application Sourced by 120/240 Vac

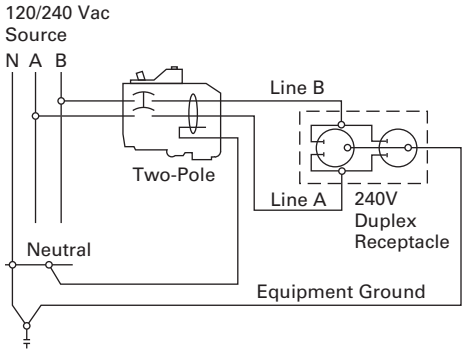

Single-Pole 120 V Load Application Sourced by 120/240 Vac

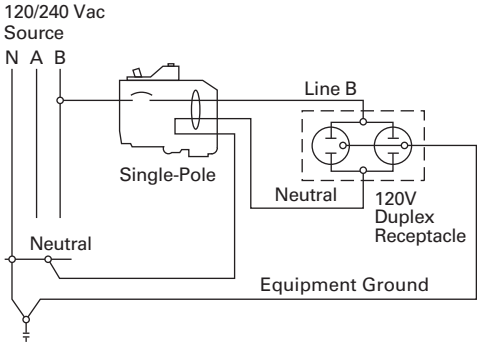

Two-Pole Shared Neutral with Duplex Receptacle Application

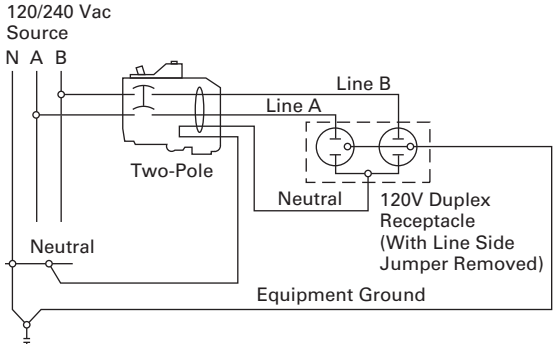

Two-Pole Shared Neutral with Multi-Duplex Receptacle Application

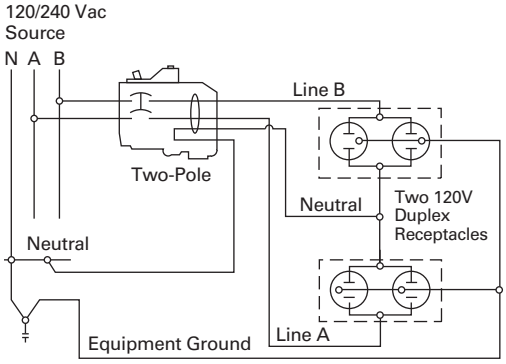

Single-Pole 120 V Duplex Receptacle Application

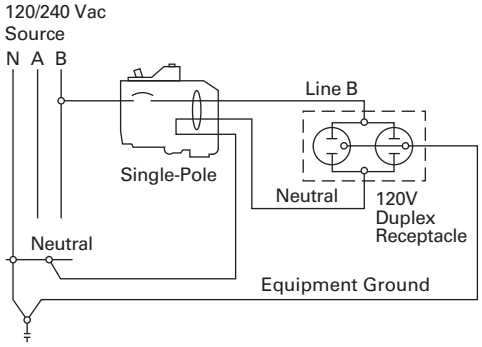

Two-Pole 120 V Multi-Duplex Receptacle Application

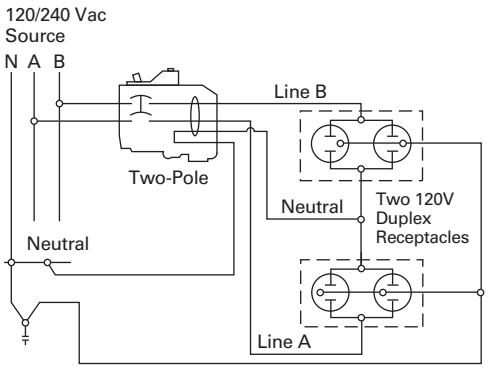

Two-Pole 120 V Duplex Receptacle Application

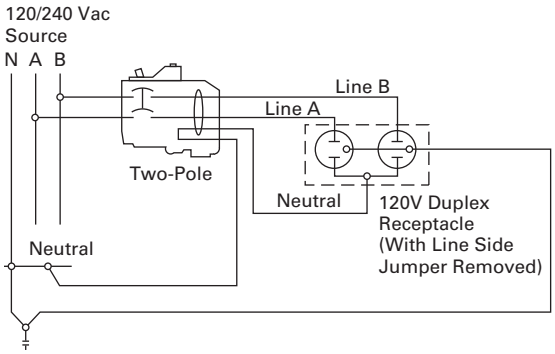

Two-Pole 240 V Duplex Receptacle Application

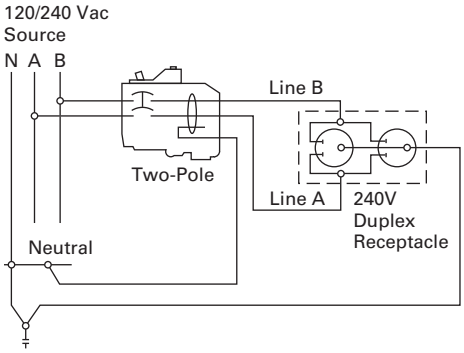

Type BR Loadcenters and Circuit Breakers

Contents

Description	*Page*
Overview	
Product Description	**V1-T1-43**
Features, Benefits and Functions	**V1-T1-43**
Standards and Certifications	**V1-T1-45**
Catalog Number Selection	**V1-T1-45**
Product Selection	**V1-T1-46**
BR Specialty Products	
BR Quick Connect Neutral Loadcenters	**V1-T1-57**
Spa Panels	**V1-T1-58**
Riser Panel	**V1-T1-59**
Type BR Renovation Loadcenter	**V1-T1-60**
Type BR Mechanical Interlock Kits	**V1-T1-62**
Type BR Retrofit Interior Kits	**V1-T1-73**
BR Circuit Breakers	**V1-T1-76**

Overview

Product Selection Guide

BR Loadcenters

Description

Service	
Single-phase, three-wire, 120/240 Vac	Three-phase, four-wire, 208Y/120 Vac Three-phase, three-wire, 240 Vac delta
Short-Circuit Current Rating	
10 kAIC: All single- and three-phase loadcenters 70–225 A, 8 to 42 circuits 22 kAIC: All convertible loadcenters using 125 A rated Type BRH main breakers or selected factory installed 125 A rated Type BRH main breaker	25 kAIC: All convertible and factory-installed single-phase loadcenters rated 150 and 200 A using Type CSR main breakers
Main Breaker/Main Lug Loadcenters	
Single-phase Main breaker: 100, 125, 150, 200, 225, 400, 600 A Main lugs: 70, 125, 150, 200, 225, 400, 600 A	Three-phase Main breaker: 100, 125, 150, 200, 225, 400, 600 A Main lugs: 100, 125, 150, 200, 225, 400, 600 A
Convertible Loadcenters	
Main breaker: single-phase up to 200 A and three-phase up to 225 A	Main lugs: single-phase up to 200 A and three-phase up to 150 A
Branch Breakers	
Types BR, BRH and BRHH: 10–150 A. single-, two- and three-pole; selected amperage available in switching duty, HACR, shunt trip and high magnetic setting Type GFCB: 15–60 A Types BJ and BJH: 125–225 A; two- and three-pole Type BD Twin: 10–50 A; two of one-pole; take one 1-inch (25.4 mm) space	Type BQ and BQC Multibreaker: 15–30 A. Two of two-pole or one two-pole and two one-pole; takes two 1-inch (25.4 mm) spaces Type BRW: 15–30 A; two-pole water heater breakers Type BRSN: 15–30 A; two-pole switching neutral breakers Type BR 15–100 A; two-pole, 240 Vac delta breakers BR-AFCI arc fault circuit interrupter
Enclosures	
NEMA Type 1 indoor NEMA Type 3R outdoor	NEMA 4X Meets or exceeds UL requirements for indoor or outdoor applications
Loadcenter and Breaker Accessories	
Branch circuit breaker: Auxiliary components, Hold-down kits, Handle ties, Lockoffs, Lockdogs Complete line of ground bar kits 5, 10, 14 and 21 circuit, some with additional #2/0 lugs; each terminal will accommodate: (3) #14–#10 Cu/Al or (1) #14–#4 Cu/Al Main and sub-feed lugs 125, 150, 225 A—two- and three-pole Shunt trips	Surge protection: Single-phase plug-on surge protector, Single-phase bottle type surge protector, Three-phase bottle type surge protector, Single-phase whole home surge protector Universal rainproof conduit hubs Group One: 3/4, 1, 1-1/4, 1-1/2, 2 inches (19.1, 25.4, 31.8, 38.1, 50.8 mm) Group Two: 2, 2-1/2, 3 inches (50.8, 63.5, 76.2 mm) Adapter plate
Bussing	
Tin-plated aluminum as standard	Limited copper bus panels available

Product Description

Loadcenters are enclosures specifically designed to house the branch circuit breakers and wiring required to distribute power to individual circuits. They contain either a main breaker when used at the service entrance point or a main lug when used as a sub-panel to add circuits to existing service. The main breaker protects the main entire panel and can be used as a service disconnect. The branch breakers protect the wires leading to individual electrical loads such as fixtures and outlets.

Features, Benefits and Functions

Loadcenter Construction

Eaton's Type BR loadcenters have standard tin-plated aluminum bus with a limited availability of copper bus. The sum of the handle ratings connected to any stab is limited to 150 A maximum on the 100 and 125 A loadcenters, and 200 A on loadcenters with 150 A or higher main bus. NEMA Type 1 boxes or enclosures are manufactured from galvanized steel. Raintight boxes are manufactured from galvanized steel, then finished using an electrostatic powder coat, baked urethane paint process.

Neutrals

Eaton Type CH loadcenters feature two types of neutrals:

Insulated/Bondable Split Neutral

Panels are supplied with split insulated neutrals with an insulated cross strap. For service entrance applications, the neutral must be bonded by using the bonding strap supplied with the panel. For non-service entrance (sub-panel) applications, the panel may be installed with the bonding strap not connected to the neutral. Separate ground bars must be used on non-service entrance panels.

Insulated/Bondable Single Neutral

Panels are supplied with a single insulated neutral. For service entrance applications, all that is required to bond the neutral is to loosen the bonding screw and the neutral screw directly beside it, insert the bonding strap into the neutral bar, and re-tighten both connections. The single neutral can be moved by the contractor to the other side of the panel, if desired. When used as a service entrance panel, unused neutral connections may be used for the termination of equipment grounds. For non-service entrance (sub-panel) applications, the panel may be installed with the bonding strap not connected to the neutral. Separate ground bars must be used on non-service entrance panels.

Grounds

In service entrance applications where the neutral is bonded, unused neutral holes may be used for terminating ground conductors. In sub-feed panels, the neutral must be isolated (non-bonded), and ground wires must be terminated on a separate ground bar.

The insulated/bondable single/split neutral panels have sufficient terminations for both ground and neutral conductors. The insulated/bondable single split neutral panels are supplied with a separate factory-installed ground bar if the catalog number contains a "G." If not, a separate ground bar should be installed. Insulated/Bondable Single Neutral panels are supplied without a ground bar (unless otherwise noted), and ground bar kits if needed must be purchased separately.

Neutral and Ground Terminals

The standard terminals on grounds and neutrals are rated to accept (3) #14–#10 Cu/Al or (1) #14–4, provided the cables terminated are of the same material. For larger cables, add-on neutral lugs may be ordered from the accessories on **Page V1-T1-66**.

Note: NEC allows only one current-carrying conductor per hole on neutrals unless otherwise noted.

Bottom Fed Loadcenters

For single-phase 225 A and below loadcenters that are bottom fed, a standard panel can be rotated 180 degrees to allow straight-in wiring of power cables to the main terminals. Because the main circuit breaker handle operates horizontally, the orientation of the main circuit breaker handle is consistent with the requirements of NEC 2008 Article 240.81.

Gutter Splicing

Loadcenters are not UL listed as wiring troughs. Therefore, gutter splicing of riser cables to tap off to the main device is not permitted. Refer to NEC 2008 Article 312.8.

Fire Rating

Due to the numerous openings in both loadcenter boxes and trims, they should not be mounted in firewalls. There is no approved method for sealing the enclosures for this application.

Date Code

The date of manufacture of each loadcenter is printed on the outside of the carton as well as inside the loadcenter. On the carton, the date code is printed on the end carton label. In the loadcenter, the date code is located on the small white label located on the right side wall (with the main device on top).

The date code is in the following format: F # # # &. The "F" is the numeric code for the Lincoln, IL plant, and the three numbers are the year and week of manufacturing, e.g., 023. The "!" sign at the end signifies the decade of the 2010. Therefore, the date code F023& would indicate that the product was manufactured in the 23rd week of 2010. The 1980s are represented by the "+" sign and the 1990s are represented by a "=" at the end of the code.

Surge Protectors

Complete home surge protection is available in multiple options, including a factory-installed option that provides the highest level of surge protection in a residential design. See Tab 3 for more details.

Circuit Breaker Case Interrupting Capacity

- 10 kAIC
- 22 kAIC
- 25 kAIC

Warranty Information

- 10-year limited loadcenter warranty
- 10-year limited branch breaker warranty

1

Type BR Loadcenter

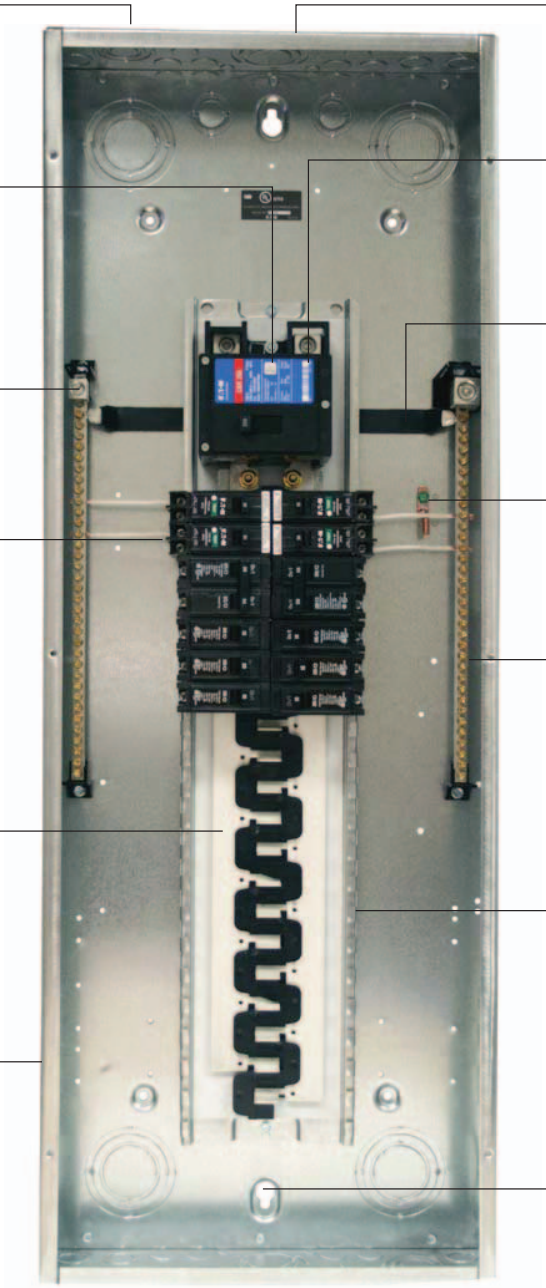

Extra 1.5 inch Knockout (38.1 mm)
- Larger knockout provides easier installation and time savings

Top or Bottom Feed
- Straight-in wiring saves labor and material
- One panel for either top or bottom applications

2/0 Lug
- Easily removable and can be installed in any location on the neutral bar

Type BR AFCI Breakers
- Compact design for easier wiring and improved wireway access
- Optional LED indicates one of six trip codes for circuit diagnostics
- Provides a clean gutter space

Standard Tin-Plated Aluminum Bus
- Excellent conductivity and corrosion resistance
- Copper bus options available for select catalog numbers

Drywall Marking on Enclosure
- Indicates proper mounting depth for flush applications

"Tangential" Center Knockout
- Easier installation for conduit applications

Commercial Grade Main Breaker
- 25 kAIC series rated main breaker for superior protection

Neutral Bus (Strap)
- Is easily removable for sub-panel applications

Bonding Z-Strap
- Provides easy field conversion for service entrance applications

Twin Neutral Bars
- Minimum 150% neutral capacity

Steel Backpan
- Provides solid and reliable breaker mounting—single piece design for stability and durability

Single Keyhole Mounting
- One keyhole at the top and bottom provides easier mounting and leveling

Warranty

10-year warranty on all Type BR loadcenters and circuit breakers.

Standards and Certifications

UL Listings

All Eaton Type BR loadcenters are listed under UL File E52977 except the 2–8 circuit loadcenters, up through and including 125 A, which are listed under UL File E8741.

Listed

Catalog Number Selection

Single- and Three-Phase Through 600 A

3 BR _ 30 42 B C 200 _ _

Phase
- **Blank** = Single-phase ①
- **3** = Three-phase

Eaton's Type BR Loadcenter

Factory Options
- **SUR** = Factory integrated surge

Number of 1-Inch (25.4 mm) Spaces

Maximum Number of Circuits

Main Device
- **B** = Main breaker
- **L** = Main lug
- **N** = Convertible main
- **H** = Main breaker high AIC

Bus
- **Blank** = Aluminum bus ①
- **C** = Copper bus

Amperes

50 = 50 A	**200** = 200 A
70 = 70 A	**225** = 225 A
100 = 100 A	**300** = 300 A
125 = 125 A	**400** = 400 A
150 = 150 A	**600** = 600 A

Enclosure
- **R** = NEMA Type 3R rainproof
- **S** = NEMA Type 1 indoor with surface trim
- **F** = NEMA Type 1 indoor with flush trim
- **Blank** = NEMA Type 1 indoor with combination trim ①
- **RIS** = Riser panel

Construction
- **Blank** = No feed thru lugs ①
- **F** = Feed-through lugs
- **G** = Ground bar
- **P** = Current design
- **NY** = NY City gutter space

Note

① No character space used.

1

Product Selection

Single-Phase—Main Circuit Breaker Loadcenters—10/25 kAIC

BR4040B200

Single-Phase Three-Wire—120/240 Vac—Insulated/Bondable Split Neutral

Main Breaker Type	Main Ampere Rating	Maximum Number 1-Inch (25.4 mm) Spaces	Maximum Number 1-Inch (25.4 mm) Circuits	Enclosure Type	Box Size	Wire Size Range Cu/Al 60 °C or 75 °C for Main Breaker	Loadcenter Catalog Number with Combination ① or NEMA Type 3R Cover
BR 10 kAIC	100	8	16	Indoor	B1	#4–1/0 ②	**BR816B100**
		10	20	Indoor	A1		**BR1020B100S11**
		10	20	Indoor	A1		**BR1020B100F11**
		10	20	Outdoor	B2R		**BR1020B100RF** ③④
		12	12	Indoor	B2		**BR1212B100**
		12	20	Indoor	B2		**BR1220B100**
		12	24	Outdoor	B2R		**BR1224B100R** ④
		16	16	Indoor	C1		**BR1616B100**
		16	20	Indoor	C1		**BR1620B100**
		16	24	Outdoor	C1R		**BR1624B100R** ④
		20	24	Outdoor	C3R		**BR2024B100R** ④
		20	20	Indoor	C2		**BR2020B100**
		16	24	Indoor	C1		**BR1624B100**
		30	30	Indoor	D1		**BR3030B100**
	125	16	24	Indoor	C1	#4–2/0	**BR1624B125**
		20	24	Indoor	C1		**BR2024B125**
		20	24	Outdoor	C3R		**BR2024B125R** ④
		30	30	Indoor	D1		**BR3030B125**
BRH ⑤ 22 kAIC	100	20	24	Indoor	C2	#4–1/0	**BR2024H100** ⑤
CSR ⑥ 25 kAIC	150	8	16	Outdoor	C3R	#2–300 kcmil	**BR816B150RF** ③④
		16	30	Indoor	C4		**BR1630B150**
		20	30	Indoor	C4		**BR2030B150**
		20	30	Outdoor	D1R		**BR2030B150R** ④
		20	40	Indoor	D1		**BR2040B150**
		20	40	Outdoor	D1R		**BR2040B150R** ④
		24	30	Indoor	G1		**BR2430B150**
		30	30	Outdoor	G1R		**BR3030B150R** ④
		30	30	Indoor	G1		**BR3030B150**
		30	40	Indoor	G1		**BR3040B150**
	200	4	8	Outdoor	8R	#2–300 kcmil	**BR48B200RF** ③⑦⑧
		8	16	Outdoor	C3R		**BR816B200RF** ③④
		16	32	Indoor	C4		**BR1632B200**
		20	40	Outdoor	D1R		**BR2040B200R** ④
		20	40	Indoor	D1		**BR2040B200**
		24	40	Indoor	G1		**BR2440B200**
		30	40	Outdoor	G1R		**BR3040B200R** ④
		30	40	Indoor	G1		**BR3040B200** ⑨
		40	40	Outdoor	L1R		**BR4040B200R** ④
		40	40	Indoor	L1		**BR4040B200**
		40	50	Indoor	L1		**BR4050B200**
		60	120	Indoor	L3		**BR60120B200**
		60	120	Outdoor	L3R		**BR60120B200R**
	225	42	42	Indoor	L2	#1–250 kcmil	**BR4242B225**
		42	42	Outdoor	L2R		**BR4242B225R** ④

Notes

① Combination style covers may be used in surface or flush applications.
② Wire range size for BR1020B100SP is #6–#1 Cu/Al.
③ Includes through-feed lugs for both phase and neutral conductors.
④ Rainproof panels are furnished with hub closure plates. For rainproof hubs, refer to **Page V1-T1-66**.
⑤ 22 kAIC series combination rating is obtained when Types BD, BR, BQ, BQC and GFCB 10 kAIC branch breakers are used in series with Type BRH main breaker.
⑥ 25 kAIC series combination rating is obtained when Types BD, BR, BQ, BQC and GFCB 10 kAIC branch circuit breakers are used in series with Type CSR main breaker.
⑦ Supplied with adapter plate to use DS Group1 hubs on **Page V1-T1-66**. If 2.50-inch (63.5 mm) hub is needed, remove adapter and use ARP00007CH25 hub.
⑧ Neutral is bonded—suitable for service entrance only—cannot be converted for sub-feed application.
⑨ Add G to the end of the catalog number for factory-installed GBK2120 ground bar.

All main circuit breaker loadcenters are listed for use as service entrance equipment and are shipped with neutral bonding strap preattached. The maximum rating of the panel is the main circuit breaker rating when used as service entrance equipment. Ground bar kits priced separately. See **Page V1-T1-66**.

Main Circuit Breaker Loadcenters—10/22 kAIC

B4242DFN

Single-Phase Three-Wire—120/240 Vac—Insulated/Bondable Split Neutral

Main Breaker Type	Main Ampere Rating	Maximum Number 1-Inch (25.4 mm) Spaces	Maximum Number 1-Inch (25.4 mm) Circuits	Enclosure Type	Box Size	Wire Size Range Cu/Al 60 °C or 75 °C for Main Breaker	Commercial Loadcenter Catalog Number ①②③ With Flush or NEMA Type 3R Cover	Commercial Loadcenter Catalog Number ①②③ With Surface Cover
DK ④	300	42	42	Indoor	24	(2) #3/0–250 kcmil	**BR4242B300F**	**BR4242B300S**
	400	42	42	Indoor	24	(2) #3/0–250 kcmil	**BR4242B400F**	**BR4242B400S**
		42	42	Outdoor	47	(2) #3/0–250 kcmil	**BR4242B400R** ⑤	—
HLD ⑥	600	42	42	Indoor	24	(2) #3/0–500 kcmil	—	**BR4242B600S**

Notes

① Ground bar kits priced separately. See **Page V1-T1-66**.
② The maximum rating of the panel is the main circuit breaker rating when used as service entrance equipment.
③ Door lock and key included with loadcenter.
④ Type DK main circuit breaker is rated 65 kAIC at 240 Vac and allows a 22 kAIC series rating on the panel when Types BR, BD and BJ branch circuit breakers are used.
⑤ Rainproof panels are furnished with hub closure plates. For rainproof hubs, refer to **Page V1-T1-66**.
⑥ Type HLD main circuit breaker is rated 65 kAIC at 240 Vac. Type HLD circuit breaker **is not** series rated with Types BR, BD and BJ branch circuit breakers.

Box sizes **Pages V1-T1-67** through **V1-T1-70**.

Please contact the Lincoln Flex Center for any configurations not listed.

1

Single-Phase—Main Lug Loadcenters

Surface **Outdoor**

Flush **Outdoor**

Surface (No Door)

Flush (No Door)

Outdoor

Single-Phase Three-Wire—120/240 Vac—Insulated/Bondable Split Neutral

Main Ampere Rating	Maximum Number 1-Inch (25.4 mm) Spaces	Circuits	Enclosure Type	Trim Type	Box Size	Wire Size Range Cu/Al 60 °C or 75 °C for Main Lugs	Loadcenter Catalog Number
70	2	4	Indoor	Surface (no door)	5	#8–#2	**BR24L70SP** ①②
	2	4	Indoor	Surface (no door)	5		**BR24L70SGP** ②③
	2	4	Outdoor	—	5R		**BR24L70RP** ①②④
	2	4	Indoor	Flush (no door)	5		**BR24L70FP** ①②
	2	4	Indoor	Flush (no door)	5		**BR24L70FGP** ②⑤
125	2	4	Indoor	Surface (no door)	6	#14–1/0	**BR24L125SP** ①②
	2	4	Outdoor	—	6R		**BR24L125RP** ①②④
	2	4	Outdoor	—	6R		**BR24L125RSEP** ②⑦⑧
	2	4	Outdoor	—	6R		**BR24L125RSE2P** ②⑥⑦
	2	4	Indoor	Flush (no door)	6		**BR24L125FP** ①②
	4	8	Indoor	Surface (no door)	7	#14–1/0	**BR48L125SP** ①⑨
	4	8	Indoor	Surface (no door)	7		**BR48L125SGP** ③⑨
	4	8	Outdoor	—	7R		**BR48L125RP** ①④⑨
	4	8	Indoor	Flush (no door)	7		**BR48L125FP** ①⑨
	4	8	Indoor	Flush (with door)	7		**BR48L125FDP** ①⑨
	4	8	Indoor	Flush (no door)	7		**BR48L125FGP** ③⑨
	6	12	Indoor	Surface (no door)	7	#14–#1	**BR612L125SP** ①⑩
	6	12	Indoor	Surface (no door)	7		**BR612L125SGP** ⑩⑪
	6	12	Indoor	Surface (with door)	7		**BR612L125SDP** ①⑩
	6	12	Indoor	Surface (with door)	7		**BR612L125SDGP** ⑩⑪
	6	12	Outdoor	—	7R		**BR612L125RP** ①④⑩
	6	12	Indoor	Flush (no door)	7		**BR612L125FP** ①⑩
	6	12	Indoor	Flush (no door)	7		**BR612L125FGP** ⑤⑩⑪
	6	12	Indoor	Flush (with door)	7		**BR612L125FDP** ⑩
	6	12	Indoor	Flush (with door)	7		**BR612L125FDGP** ⑤⑩⑪
	8	16	Indoor	Surface (no door)	7	#14–#1	**BR816L125SP** ①⑩
	8	16	Indoor	Surface (no door)	7		**BR816L125SGP** ⑩⑫
	8	16	Indoor	Surface (with door)	7		**BR816L125SDP** ①⑩
	8	16	Indoor	Surface (with door)	7		**BR816L125SDGP** ⑩⑫
	8	16	Outdoor	—	7R		**BR816L125RP** ①④⑩
	8	16	Indoor	Flush (no door)	7		**BR816L125FP** ①⑩
	8	16	Indoor	Flush (no door)	7		**BR816L125FGP** ⑤⑩⑫
	8	16	Indoor	Flush (with door)	7		**BR816L125FDP** ①⑩
	8	16	Indoor	Flush (with door)	7		**BR816L125FDGP** ⑤⑩⑫

Notes

① Ground bar kits priced separately. See **Page V1-T1-66**.
– For 2/4 circuit loadcenters, use GBK5 or GBK520 ground bar.
– For 4/8, 6/12 and 8/16 circuit loadcenters, use GBK10 ground bar.
– Ground bars mount to the left side wall of the enclosure for the 4/8, 6/12 and 8/16 circuit loadcenters.

② Suitable for use as service equipment when not more than two service disconnecting mains are provided or when not used as a lighting and appliance panelboard (see Article 408.34 of the NEC).

③ Ground bar GBK5 is installed.

④ Rainproof panels are furnished with hub closure plates. For rainproof hubs, refer to **Page V1-T1-66**.

⑤ CSA and UL approved.

⑥ Neutral/ground holes (6) #14–6 and (3) #14–2/0 AWG Cu/Al.

⑦ For use as service entrance applications only.

⑧ Neutral/ground holes (6) #14–6 and (3) #14–1/0 AWG Cu/Al.

⑨ Suitable for use as service equipment when not more than two service disconnecting mains are provided or when not more than six service disconnecting mains are provided and when not used as a lighting and appliance panelboard (see Article 408.34 of the NEC).

⑩ Suitable for use as service equipment when a main breaker is used or when not more than six service disconnecting mains are provided and when not used as a lighting and appliance panelboard (see Article 408.34 of the NEC).

⑪ Ground bar GBK10 is installed.

⑫ Ground bar GBK14 is installed.

Box sizes **Pages V1-T1-67** through **V1-T1-70**.

Single-Phase—Main Lug Loadcenters

Single-Phase Three-Wire—120/240 Vac—Insulated/Bondable Split Neutral, continued

	Main Ampere Rating	Maximum Number 1-Inch (25.4 mm) Spaces	Circuits	Enclosure Type	Box Size	Wire Size Range Cu/Al 60 °C or 75 °C for Main Lugs	Loadcenter Catalog Number with Combination or NEMA Type 3R Cover ①
BR1224L125	125	12	12	Indoor	B1	#6–2/0	**BR1212L125** ②③④⑤
		12	24	Indoor	B1		**BR1224L125** ②④⑤
		12	24	Indoor	B1		**BR1224L125G** ②④⑤
		12	24	Indoor	B1		**BR1224L125DG** ②④⑤⑥
		12	24	Outdoor	B1R		**BR1224L125R** ②⑤⑦
		16	16	Indoor	B2		**BR1616L125** ②④⑤
		16	24	Indoor	B2		**BR1624L125** ②④
		16	24	Indoor	B2		**BR1624L125G** ②④
		16	24	Outdoor	B2R		**BR1624L125R** ②⑦
		20	20	Indoor	C1		**BR2020L125** ②④⑤
		20	24	Indoor	C1		**BR2024L125** ②④
		20	24	Indoor	C1		**BR2024L125G** ②④⑧
		20	24	Outdoor	C1R		**BR2024L125R** ②⑦
		24	24	Indoor	C2		**BR2424L125** ②④
		24	24	Indoor	C2		**BR2424L125G** ②④⑧
		30	42	Indoor	D1		**BR3042L125** ②④
	150	16	30	Indoor	C2	#1–300 kcmil	**BR1630L150** ④⑨
		20	30	Indoor	C2		**BR2030L150** ④⑨
BR1224L200	200	8	16	Outdoor	B2R	#1–300 kcmil	**BR816L200RF** ⑤⑦⑩
		12	24	Indoor	B2		**BR1224L200** ④⑤⑨
		12	24	Outdoor	B2R		**BR1224L200R** ⑤⑦⑨
		20	40	Indoor	C2		**BR2040L200** ④⑨
		20	40	Indoor	C2		**BR2040L200G** ④⑧⑨
		20	40	Outdoor	C3R		**BR2040L200R** ⑦⑨
		24	40	Indoor	C4		**BR2440L200** ④⑨
		30	40	Indoor	D1		**BR3040L200** ④⑨
		30	40	Indoor	D1		**BR3040L200G** ④⑧⑨
		30	40	Outdoor	D1R		**BR3040L200R** ⑦⑨
		40	40	Indoor	G1		**BR4040L200** ④⑨
		40	40	Indoor	G1		**BR4040L200G** ④⑨
		40	40	Outdoor	G1R		**BR4040L200R** ⑦⑨
		60	120	Indoor	L3		**BR60120L200** ⑪
	225	42	42	Indoor	L1	#1–300 kcmil	**BR4242L225** ④
		42	42	Outdoor	L1R		**BR4242L225R** ⑦

Notes

① Ground bar kits priced separately unless otherwise noted. See **Page V1-T1-66**.
② Has notch for BREQS125 hold-down kit.
③ Single, movable neutral is provided.
④ Combination cover style.
⑤ Suitable for use as service equipment when not more than six main disconnecting means are provided and when not used as a lighting and appliance panelboard (see Article 408.34 of the NEC).
⑥ Ground bars GBK5 and GBK520 installed.
⑦ Rainproof panels are furnished with hub closure plates. For rainproof hubs, refer to **Page V1-T1-66**.
⑧ Ground bar GBK1220 installed.
⑨ Has notch for BRHDK125 hold-down kit.
⑩ Includes through-feed lugs for both phase and neutral conductors.
⑪ Includes main lugs. Loadcenters can convert to main breaker using kit.

1

Single-Phase—Main Lug Loadcenters—400 and 600 A

4242DFN

Single-Phase Three-Wire—120/240 Vac—Insulated/Bondable Split Neutral

Main Ampere Rating	Maximum Number 1-Inch (25.4 mm) Spaces	Circuits	Enclosure Type	Box Size	Wire Size Range Cu/Al 60 °C or 75 °C for Main Lugs	Commercial Loadcenter Catalog Number ①②③ With Flush or NEMA Type 3R Cover	With Surface Cover
400	12	24	Outdoor	42	(2) #3/0–400 kcmil	**BR1224L400R** ④⑤	—
	42	42	Indoor	22		**BR4242L400F**	**BR4242L400S**
	42	42	Outdoor	46		**BR4242L400R** ④	—
600	42	42	Indoor	22	(2) #2–500 kcmil	—	**BR4242L600S**

Notes

① Ground bar kits priced separately unless otherwise noted. See **Page V1-T1-66**.

② Has notch for BRHDK125 hold-down kit.

③ Ground bar GBK8 installed.

④ Rainproof panels are furnished with hub closure plates. For rainproof hubs, refer to **Page V1-T1-66**.

⑤ Suitable for use as service equipment when not more than six main disconnecting means are provided and when not used as a lighting and appliance panelboard (see Article 408.34 of the NEC).

Convertible Loadcenters MCB or MLO—Base Units and Main Devices 10/22/25 kAIC, Complete Assembly Consists of: Loadcenter and Either Main Breaker Kit or Main Lug Kit

Note: Interrupting rating depends on main circuit breaker selected.

BR3040N200

Base Units—Single-Phase Three-Wire—120/240 Vac—Insulated/Bondable Split Neutral (Unless Otherwise Noted)

Main Ampere Rating ①	Maximum Number 1-Inch (25.4 mm) Spaces	Circuits	Enclosure Type	Box Size	Wire Size Range Cu/Al 60 °C or 75 °C for Main	Loadcenter Catalog Number With Combination or NEMA Type 3R Cover ②③
125 ④	12	24	Indoor	B2	See main breaker and main lug kit tables **Page V1-T1-54**.	**BR1224N125** ⑤⑥
	12	24	Outdoor	B2R		**BR1224N125R** ⑤⑥⑦
	16	24	Indoor	C1		**BR1624N125** ⑤
	16	24	Outdoor	C1R		**BR1624N125R** ⑤⑦
	20	24	Indoor	C2		**BR2024N125** ⑤
	20	24	Outdoor	C3R		**BR2024N125R** ⑤⑦
200 ⑧	8	16	Outdoor	C3R		**BR816N200RF** ⑦⑨⑩⑪
	12	24	Indoor	C4		**BR1224N200** ⑩
	12	24	Outdoor	C3R		**BR1224N200R** ⑦⑩
	16	32	Indoor	C4		**BR1632N200** ⑩
	20	40	Indoor	D1		**BR2040N200** ⑩
	20	40	Indoor	D1		**BR2040N200G** ⑫
	20	40	Outdoor	D1R		**BR2040N200R** ⑦⑩
	20	40	Outdoor	D1R		**BR2040N200RG** ⑫
	24	40	Indoor	G1		**BR2440N200** ⑦⑩
	30	40	Indoor	G1		**BR3040N200** ⑩
	30	40	Indoor	G1		**BR3040N200G** ⑫
	30	40	Outdoor	G1R		**BR3040N200R** ⑦⑩
	30	40	Outdoor	G1R		**BR3040N200RG** ⑫
	40	40	Indoor	L1		**BR4040N200** ⑩
	40	40	Indoor	L1		**BR4040N200G** ⑫
	40	40	Outdoor	L1R		**BR4040N200R** ⑦⑩
	40	40	Outdoor	L1R		**BR4040N200RG** ⑫
	40	50	Indoor	L1		**BR4050N200**
	40	50	Outdoor	L1R		**BR4050N200R**

Notes

① The maximum rating of the loadcenter is the main circuit breaker rating when used as service entrance equipment.
② 100, 125 and 200 A convertible base unit catalog numbers include interior, box and cover only. Main devices and accessories must be ordered separately for field installation. All convertible base units are listed as suitable for use as service entrance equipment when used per Article 384 of the NEC.
③ Ground bar kits priced separately except as noted, refer to **Page V1-T1-66**.
④ For main breaker, use Type BR. For main lug use Type BRSF.
⑤ BREQS125 hold-down screw comes with loadcenter for back-fed Types BR and BRH main circuit breakers.
⑥ Convertible to maximum of 100 A main circuit breaker and 125 A main lug.
⑦ Rainproof loadcenters are furnished with hub closure plates. For rainproof hubs, refer to **Page V1-T1-66**.
⑧ For main breaker, use Type BW or CSR. For main lug, use Type BRL.
⑨ Includes through-feed lugs for both phase and neutral conductors.
⑩ No hold-down provisions for back-fed Types BR and BRH main circuit breakers.
⑪ Insulated/bondable single neutral.
⑫ Includes GBK2120 ground bar.

Convertible Loadcenters MCB or MLO—Base Units and Main Devices 10/22/25 kAIC, Complete Assembly Consists of: Loadcenter and Either Main Breaker Kit or Main Lug Kit

Note: Interrupting rating depends on main circuit breaker selected.

BW2200

Main Devices—Two- and Three-Pole Main Circuit Breakers—120/240 Vac or 208Y/120 Vac or 240 Vac

Ampere Rating	Wire Size Range Cu/Al 60 °C or 75 °C for Main Breaker	10 kAIC Catalog Number	22/25 kAIC Catalog Number ①
Two-Pole			
100	#4–1/0	**BR2100**	**BRH2100**
110	#4–1/0	**BR2110**	**BRH2110**
125	#4–2/0	**BR2125**	**BRH2125**
125	#2–300 kcmil	**BW2125**	**CSR2125N**
150	#2–300 kcmil	**BW2150**	**CSR2150N**
175	#2–300 kcmil	**BW2175**	**CSR2175N**
200	#2–300 kcmil	**BW2200**	**CSR2200N**
Three-Pole			
100	#1	**BR3100**	**BRH3100**

BRL200

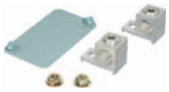

Main Devices—Two- and Three-Pole Main Lug Kits—120/240 Vac or 208Y/120 Vac or 240 Vac

Ampere Rating	Wire Size Range Cu/Al 60 °C or 75 °C for Main Lugs	Catalog Number
Two-Pole		
125	#6–2/0	**BRSF125**
150	#1–300 kcmil	**BRL200**
175	#1–300 kcmil	**BRL200**
200	#1–300 kcmil	**BRL200**
Three-Pole		
150	#6–3/0	**3BRSF150**

Main Circuit Breaker with Accessory

Example: BW22005R01 (Put description with catalog number on order. See **Page V1-T1-87**.)

Main Circuit Breaker Loadcenters—Copper Bus 10/22/25 kAIC

BR3030BC100

Main Circuit Breaker Loadcenters—With Copper Bus—Single-Phase Three-Wire—120/240 Vac—Insulated/Bondable Split Neutral

Main Breaker Type	Main Ampere Rating	Maximum Number 1-Inch (25.4 mm) Spaces	Maximum Number 1-Inch (25.4 mm) Circuits	Enclosure Type	Box Size	Wire Size Range Cu/Al 60 °C or 75 °C for Main Breaker	Loadcenter Catalog Number with Combination Cover ②③
BR 10 kAIC	100	20	20	Indoor	C2	#4–1/0	**BR2020BC100**
		30	30	Indoor	D1	#4–1/0	**BR3030BC100**
BRH 22 kAIC ④	100	30	30	Indoor	D1	#4–1/0	**BR3030HC100**
CSR 25 kAIC	150	30	30	Indoor	G1	#2–300 kcmil	**BR3030BC150**
	200	20	40	Indoor	D1	#2–300 kcmil	**BR2040BC200**
		30	40	Indoor	G1	#2–300 kcmil	**BR3040BC200**
		40	40	Indoor	L1	#2–300 kcmil	**BR4040BC200**

Main Lug Only Loadcenters—Copper Bus

BR816LC125FDP

Single-Phase Three-Wire—120/240 Vac—Insulated/Bondable Single Neutral with Copper Bus

Main Ampere Rating	Maximum Number 1-Inch (25.4 mm) Spaces	Maximum Number 1-Inch (25.4 mm) Circuits	Enclosure Type	Trim Type	Box Size	Wire Size Range Cu/Al 60 °C or 75 °C for Main Lugs	Loadcenter Catalog Number
125	8	16	Indoor	Surface (with door)	7	#14–1	**BR816LC125SDP**
	8	16	Indoor	Flush (with door)	7		**BR816LC125FDP**

Notes

① Series combination rating with Types BD, BR, BQ, BQC and GFCB is 22 kAIC with BRH main and 25 kAIC with CSR main.

② All main circuit breaker loadcenters are listed for use as service entrance equipment and are shipped with neutral bonding strap preattached. The maximum rating of the panel is the main circuit breaker rating when used as service entrance equipment.

③ Ground bar kits priced separately. See **Page V1-T1-66**.

④ 22 kAIC series combination rating is obtained when Types BD, BR, BQ, BQC and GFCB 10 kAIC branch breakers are used in series with Type BRH main breaker.

Box sizes **Pages V1-T1-67** through **V1-T1-70**.

Convertible Loadcenters—Copper Bus 10/22/25 kAIC

BR3040NC200

Convertible—Single-Phase, Three-Wire—120/240 Vac—Insulated/Bondable Split Neutral

Main Ampere Rating	Maximum Number 1-Inch (25.4 mm) Spaces	Circuits	Enclosure Type	Box Size	Wire Size Range Cu/Al 60 °C or 75 °C for Main	Loadcenter Catalog Number (With Combination or NEMA Type 3R Cover) ①②③
125 10/22 kAIC ④⑤	12	24	Indoor	B2	See main breaker and main lug kit tables on **Page V1-T1-54**.	**BR1224NC125** ⑥⑦
	12	24	Outdoor	B2R		**BR1224NC125R** ⑥⑦⑧
	20	24	Indoor	C2		**BR2024NC125** ⑦
	20	24	Outdoor	C3R		**BR2024NC125R** ⑦⑧
200 10/25 kAIC ④⑨	20	40	Indoor	D1		**BR2040NC200**
	20	40	Outdoor	D1R		**BR2040NC200R** ⑧
	30	40	Indoor	G1		**BR3040NC200**
	30	40	Outdoor	G1R		**BR3040NC200R** ⑧
	40	40	Indoor	L1		**BR4040NC200**
	40	40	Outdoor	L1R		**BR4040NC200R** ⑧

Notes

① 100, 125 and 200 A convertible base unit catalog numbers include interior, box and cover only. Main devices and accessories must be ordered separately for field installation. All convertible base units are listed as suitable for use as service entrance equipment when used per Article 384 of the NEC.

② Ground bar kits priced separately, refer to **Page V1-T1-66**.

③ All main circuit breaker loadcenters are listed for use as service entrance equipment and are shipped with a neutral bonding strap preattached. The maximum main rating of the loadcenter is the main breaker rating when used as service entrance equipment.

④ Interrupting rating depends on main circuit breaker selected. See **Page V1-T1-66** for mains.

⑤ For main breaker, use Type BW or CSR. For main lug, use Type BRL.

⑥ Rainproof loadcenters are furnished with hub closure plates. For rainproof hubs, refer to **Page V1-T1-66**.

⑦ Hold-down screw BREQS125 comes with loadcenter for back-fed Types BR and BRH main circuit breakers.

⑧ For main breaker, use Type BR. For main lug, use Type BRSF.

⑨ Suitable for use as service equipment when not more than six main disconnecting means are provided and when not used as a lighting and appliance panelboard. (see Article 408.34 of the NEC).

Three-Phase—Type BR Main Circuit Breaker Loadcenters

Three-Phase, Four-Wire—Main Lug Loadcenters—Copper Bus—208Y/120 Vac or 240 Vac, Insulated/Bondable Split Neutral

Main Ampere Rating	Maximum Number 1-Inch (25.4 mm) Spaces	Circuits	Enclosure Type	Box Size	Wire Size Range Cu/Al 60 °C or 75 °C for Main	Loadcenter Catalog Number (With Combination or NEMA Type 3R Cover)
125	12	24	Indoor	C1	#6–3/0	**3BR1224LC125**
125	12	24	Outdoor	C1R	#6–3/0	**3BR1224LC125R**
150	24	42	Indoor	D1	#4–300 kcmil	**3BR2442LC150**
150	24	42	Outdoor	D1R	#4–300 kcmil	**3BR2442LC150R**
200	12	24	Indoor	C4	#4–300 kcmil	**3BR1224LC200**
200	12	24	Outdoor	C3R	#4–300 kcmil	**3BR1224LC200R**
200	30	42	Indoor	G1	#4–300 kcmil	**3BR3042LC200**
200	30	42	Outdoor	G1R	#4–300 kcmil	**3BR3042LC200R**
200	42	42	Indoor	L1	#4–300 kcmil	**3BR4242LC200**
200	42	42	Outdoor	L1R	#4–300 kcmil	**3BR4242LC200R**
225	30	42	Indoor	L1	#4–300 kcmil	**3BR3042LC225**
225	30	42	Outdoor	L1R	#4–300 kcmil	**3BR3042LC225R**
400	42	42	Indoor	24	(2) 3/0–250 kcmil	**3BR4242LC400S**
	42	42	Outdoor	47		**3BR4242BC400R**
600	42	42	Indoor	24	(2) 3/0–500 kcmil	**3BR4242LC600S**

Three-Phase, Four-Wire—Main Circuit Breaker Loadcenters—Copper Bus—208Y/120 Vac or 240 Vac, Insulated/Bondable Split Neutral

Main Breaker Type	Main Ampere Rating	Maximum Number 1-Inch (25.4 mm) Spaces	Circuits	Enclosure Type	Box Size	Wire Size Range Cu/Al 60 °C or 75 °C for Main Breaker	Loadcenter Catalog Number (With Combination or NEMA Type 3R Cover)
BR 10 kAIC	100	12	24	Indoor	C1	#14–1/0	**3BR1224BC100**
	100	12	24	Outdoor	C1R	#14–1/0	**3BR1224BC100R**
CC 10 kAIC	150	30	42	Indoor	L1	#6–4/0	**3BR3042BC150**
	150	30	42	Outdoor	L1R	#6–4/0	**3BR3042BC150R**
	200	42	42	Indoor	L2	2/0–300 kcmil	**3BR4242BC200**
	200	42	42	Outdoor	L2R	2/0–300 kcmil	**3BR4242BC200R**
	225	42	42	Indoor	L2	2/0–300 kcmil	**3BR4242BC225**
	225	42	42	Outdoor	L2R	2/0–300 kcmil	**3BR4242BC225R**
DK 22 kAIC	400	42	42	Indoor	24	(2) 3/0–250 kcmil	**3BR4242BC400S**
		42	42	Outdoor	47		**3BR4242BC400R**
HLD 10 kAIC	600	42	42	Indoor	24	(2) 3/0–500 kcmil	**3BR4242BC600S**

3BR4242B200

Three-Phase, Four-Wire—Main Circuit Breaker Loadcenters—Aluminum Bus—208Y/120 Vac or 240 Vac Insulated/Bondable Split Neutral

Main Breaker Type	Main Ampere Rating	Maximum Number 1-Inch (25.4 mm) Spaces	Circuits	Enclosure Type	Box Size	Wire Size Range Cu/Al 60 °C or 75 °C for Main Breaker	Loadcenter Catalog Number ①② (With Combination or NEMA Type 3R Cover)
BR 10 kAIC	100	12	24	Indoor	C1	#14–1/0	**3BR1224B100**
		12	24	Outdoor	C1R		**3BR1224B100R** ③
CC 10 kAIC	125	30	42	Indoor	L1	#6–4/0	**3BR3042B125**
	150	30	42	Indoor	L1	#6–4/0	**3BR3042B150**
		30	42	Outdoor	L1R		**3BR3042B150R** ③
	200	30	42	Indoor	L1	#1–250 kcmil	**3BR3042B200**
		30	42	Outdoor	L1R		**3BR3042B200R** ③
		42	42	Indoor	L2		**3BR4242B200**
		42	42	Outdoor	L2R		**3BR4242B200R** ③
CHH 100 kAIC	200	42	42	Indoor	L2	2/0–300 kcmil	**3BR4242H200** ⑥
CC 10 kAIC	225	42	42	Indoor	L2	2/0–300 kcmil	**3BR4242B225**
		42	42	Outdoor	L2R		**3BR4242B225R** ③
DK ④ 22 kAIC	400	42	42	Indoor	24	(2) #3/0–250 kcmil	**3BR4242B400S** ⑦
		42	42	Indoor	24		**3BR4242B400F**
		42	42	Outdoor	47		**3BR4242B400R** ③
LD ⑤	600	42	42	Indoor	24	(2) #3/0–500 kcmil	**3BR4242B600F**

Notes

① All main circuit breaker loadcenters are listed for use as service entrance equipment and are shipped with a neutral bonding strap pre-attached (commercial loadcenters do not have a pre-attached bonding strip). The maximum main rating of the panel is the main circuit breaker rating when used as service entrance equipment.

② Ground bar kits priced separately. See **Page V1-T1-66**.

③ Rainproof loadcenters are furnished with hub closure plates. For rainproof hubs, refer to **Page V1-T1-66**.

④ Type DK main circuit breaker is rated 65 kAIC at 240 Vac and allows a 22 kAIC series rating on the loadcenter when Types BR, BD and BJ branch circuit breakers are used.

⑤ The LD main circuit breaker is rated 65 kAIC at 240 Vac. Type LD circuit breaker **is not** series rated with Types BR, BD and BJ branch circuit breakers.

⑥ Includes CHH 100 kAIC rated MCB. 100 kAIC series rating combination is obtained when types BD, BR, BQ, BQC and GFGB branch breakers are used with CHH main.

⑦ With surface cover.

3BR1224L125

Three-Phase, Four-Wire—Main Lug Loadcenters—Aluminum Bus—208Y/120 Vac or 240 Vac, Insulated/Bondable (Unless Otherwise Noted)

Main Ampere Rating	Maximum Number 1-Inch (25.4 mm) Spaces	Circuits	Enclosure Type	Box Size	Wire Size Range Cu/Al 60 °C or 75 °C for Main Lugs	Loadcenter Catalog Number ① (With Combination or NEMA Type 3R Cover)
100	3	3	Indoor	9	#6–1/0	**3BR3L100S** ②③
	3	3	Outdoor	9R		**3BR3L100R** ③④
125	12	24	Indoor	C1	#6–3/0	**3BR1224L125** ⑤⑥
	12	24	Outdoor	C1R		**3BR1224L125R** ④⑤⑥
150	18	36	Indoor	C2	#6–4/0	**3BR1836L150**
	18	36	Outdoor	C3R		**3BR1836L150R**
	24	42	Indoor	D1	#4–300 kcmil	**3BR2442L150**
	24	42	Outdoor	D1R		**3BR2442L150R** ④
200	12	24	Indoor	C4	#4–300 kcmil	**3BR1224L200** ⑥
	12	24	Outdoor	C3R		**3BR1224L200R** ④⑥
	18	36	Indoor	C4	#4–300 kcmil	**3BR1836L200**
	18	36	Outdoor	C3R		**3BR1836L200R**
	30	42	Indoor	G1	#4–300 kcmil	**3BR3042L200**
	30	42	Outdoor	G1R		**3BR3042L200R** ④
	42	42	Indoor	L1	#4–300 kcmil	**3BR4242L200**
	42	42	Outdoor	L1R		**3BR4242L200R** ④
225	42	42	Indoor	L1	#4–300 kcmil	**3BR4242L225**
	42	42	Outdoor	L1R		**3BR4242L225R** ④

3BR4242L400F

Three-Phase, Four-Wire—Main Lug Loadcenters—Aluminum Bus—208Y/120 Vac or 240 Vac, Insulated/Bondable Split Neutral

Main Ampere Rating	Maximum Number 1-Inch (25.4 mm) Spaces	Circuits	Enclosure Type	Box Size	Wire Size Range Cu/Al 60 °C or 75 °C for Main Lugs	Commercial Loadcenter Catalog Number ⑦ With Flush or NEMA Type 3R Cover	With Surface Cover
400	42	42	Indoor	22	(1) 250–750 kcmil or (2) #3/0–250 kcmil	**3BR4242L400F**	**3BR4242L400S**
	42	42	Outdoor	46		**3BR4242L400R** ④	—
600	42	42	Indoor	22	(2) #2–500 kcmil	—	**3BR4242L600S**

Notes

① Ground bar kits priced separately. See **Page V1-T1-66**.
② Surface cover only.
③ Insulated/bondable single neutral.
④ Rainproof loadcenters are furnished with hub closure plates. For rainproof hubs, refer to **Page V1-T1-66**.
⑤ Has notch for BREQS125 hold-down kit.
⑥ Suitable for use as service equipment when not more than six main disconnecting means are provided and when not used as a lighting and appliance panelboard (see Article 408.34 of the NEC).
⑦ Door lock and key included with loadcenter.

Box sizes **Pages V1-T1-67** through **V1-T1-70**.

3BR3030N100

3BR4242N225NY

Three-Phase, Four-Wire—Convertible Loadcenters—Aluminum Bus—208Y/120 Vac or 240 Vac, Insulated/Bondable Split Neutral

Main Ampere Rating ①	Maximum Number 1-Inch (25.4 mm) Spaces	Circuits	Enclosure Type	Box Size	Wire Size Range Cu/Al 60 °C or 75 °C for Main	Loadcenter Catalog Number ②③ (With Combination or NEMA Type 3R Cover)
100 ④	30	30	Indoor	D1	See main breaker and main lug kit tables below.	**3BR3030N100** ⑤
	30	30	Outdoor	D1R		**3BR3030N100R** ⑤⑥
125 ④	12	24	Indoor	C1		**3BR1224N125** ⑤⑥⑦
	12	24	Outdoor	C1R		**3BR1224N125R** ⑤⑥⑦⑧
200	30	42	Indoor	L1		**3BR3042N200**
225	42	42	Indoor	L2		**3BR4242N225**
	42	42	Indoor	B		**3BR4242B225NY** ⑨

Three-Phase Main Breaker Kits—10 kAIC

Ampere Rating	Wire Size Range Cu/Al 60 °C or 75 °C	Catalog Number
100	#6–4/0	**CC3100N**
125	#6–4/0	**CC3125N**
150	#6–4/0	**CC3150N**
175	#2/0–300 kcmil	**CC3175N**
200	#2/0–300 kcmil	**CC3200N**
225	#2/0–300 kcmil	**CC3225N**

Three-Phase Main Lugs Kit for Convertible Loadcenters

Ampere Rating	Wire Size Range Cu/Al 60 °C or 75 °C	Catalog Number
225	#1–300 kcmil	**3BRL225**
225	#1–300 kcmil	**3BRS225** ⑩

Notes

① The maximum rating of the loadcenter is the main circuit breaker rating when used as service entrance equipment.

② 100, 125 and 200 A convertible base unit catalog numbers include interior, box and cover only. Main devices and accessories must be ordered separately for field installation.
All convertible base units are listed as suitable for use as service entrance equipment when used per Article 384 of the NEC.

③ Ground bar kits priced separately. See **Page V1-T1-66**.

④ For main breaker, use Type BR. For main lug, use Type BRSF.

⑤ BREQS125 hold-down screw comes with loadcenter for back-fed Types BR and BRH main circuit breakers.

⑥ Rainproof loadcenters are furnished with hub closure plates. For rainproof hubs, refer to **Page V1-T1-66**.

⑦ Convertible to maximum of 100 A main circuit breaker and 125 A main lug.

⑧ Suitable for use as service equipment when not more than six main disconnecting means are provided and when not used as a lighting and appliance panelboard
(see Article 408.34 of the NEC).

⑨ Order 3BR42FTNY or 3BR42STNY cover separately.

⑩ For subfeed.

Box sizes **Pages V1-T1-67** through **V1-T1-70**.

BR Quick Connect Neutral Loadcenters

Contents—BR Specialty Products

Description	*Page*
Overview	V1-T1-42
BR Specialty Products	
BR Quick Connect Neutral Loadcenters	
Spa Panels	V1-T1-58
Riser Panel	V1-T1-59
Type BR Renovation Loadcenter	V1-T1-60
Type BR Mechanical Interlock Kits	V1-T1-62
Type BR Retrofit Interior Kits	V1-T1-73
BR Circuit Breakers	V1-T1-76

BR Specialty Products

BR Quick Connect Neutral Loadcenters

Product Description

The Type BR Quick Connect Neutral loadcenters coupled with Type BR Quick Connect Neutral electronic breakers provide a clean, quick connection for an installer looking to save time while providing a professional look.

Features and Benefits

- Full-length neutral bars provide over 300% neutral capacity while enhancing installation flexibility for the installer
- Backed-out neutral screws allow an installer to make a quick connection when terminating neutral and ground wires
- Extended circuits (30/60, 40/80) provide maximum flexibility to a contractor on every space possible
- Standard LED diagnostics on AFCI and AF/GF breakers provides installers best-in-class troubleshooting technology
- Cut-to-length neutral wires provides a clean, professional look versus traditional pigtail circuit breakers
- Solid-tip, stranded neutral wires provide a quick connection to the full length neutral bar

Product Selection

BR Quick Connect Neutral Loadcenters ①

Main Device	Ampere Rating	Spaces	Circuits ②	Incoming Lug Size	Enclosure Type ③	Box Size	Ground Bar	Number of Neutral Terminations	Catalog Number
BR 10 kAIC	100	30	60	#4–1/0	Indoor	D1	④	96	**BR3060BQN100**
CSR 25 kAIC	150	30	60	#2–300 kcmil	Indoor	G1	④	102	**BR3060BQN150**
CSR 25 kAIC	200	30	60	#2–300 kcmil	Indoor	G1	④	102	**BR3060BQN200**
CSR 25 kAIC	200	40	80	#2–300 kcmil	Indoor	L1	④	128	**BR4080BQN200**
CSR 25 kAIC	200	30	60	#2–300 kcmil	Outdoor	L1R	④	94	**BR3060BQN200R**
CSR 25 kAIC	200	40	80	#2–300 kcmil	Outdoor	G1R	④	128	**BR4080BQN200R**
Main lug only	125	24	48	#6–2/0	Indoor	C2	GBK14	80	**BR2448LQN125G**
Main lug only	125	30	60	#6–2/0	Indoor	D1	GBK10	96	**BR3060LQN125G**
Main lug only	200	30	60	#1–300 kcmil	Indoor	D1	GBK1020 + GBK10	96	**BR3060LQN200G**
Main lug only	200	40	80	#1–300 kcmil	Indoor	G1	GBK1020 + GBK10	122	**BR4080LQN200G**
Main lug only	125	20	40	#6–2/0	Outdoor	C1R	GBK14	68	**BR2040LQN125RG**
Main lug only	200	30	60	#1–300 kcmil	Outdoor	D1R	GBK1420	94	**BR3060LQN200RG**
Convertible	200	30	60	—	Indoor	G1	④	102	**BR3060NQN200**
Convertible	200	40	80	—	Indoor	L1	④	128	**BR4080NQN200**
Convertible	200	30	60	—	Outdoor	G1R	④	94	**BR3060NQN200R**
Convertible	200	40	80	—	Outdoor	L1R	④	128	**BR4080NQN200R**

BR Quick Connect Neutral Electronic Breakers

Ampere Rating	Poles	Wire Size	Breaker Type	LED Diagnostics Included	Catalog Number
15	Single-pole 10 kAIC	#14–4	Combination AFCI	Yes	**BRCAF115QN**
20	Single-pole 10 kAIC	#14–4	Combination AFCI	Yes	**BRCAF120QN**
15	Single-pole 10 kAIC	#14–4	Arc fault/ground fault	Yes	**BRLAFGF115QN**
20	Single-pole 10 kAIC	#14–4	Arc fault/ground fault	Yes	**BRLAFGF120QN**

Notes

① BR Quick Connect Neutral loadcenters accept both standard and Quick Connect Neutral breakers.
② Loadcenters accept Type BR twin breakers.
③ Combination cover included with every indoor loadcenter.
④ Ground bar kit not included. Purchase separately.

Spa Panels

Contents—BR Specialty Products

Description	*Page*
Overview	**V1-T1-42**
BR Specialty Products	
BR Quick Connect Neutral Loadcenters	**V1-T1-57**
Spa Panels	
Riser Panel	**V1-T1-59**
Type BR Renovation Loadcenter	**V1-T1-60**
Type BR Mechanical Interlock Kits	**V1-T1-62**
Type BR Retrofit Interior Kits	**V1-T1-73**
BR Circuit Breakers	**V1-T1-76**

Spa Panels

Product Description

Eaton's BR Spa Panels distribute power to outdoor loads and provide protection for people from electric shock. Save time and money with streamlined installation procedures and easy-access features. Spa panels meet NEC requirements by providing a ground fault circuit interruption device and a disconnect switch in a single simple device. Ships assembled prewired, factory tested and ready to install.

Features

- 10-year warranty
- UL Listed
- Factory-installed two-pole ground fault circuit interrupter (GFCI)

Product Selection

BR Spa Panel

Spa Panel—Meets NEC Article 680.40 Through 680.43—Requirements for GFCI Protection

Main Ampere Rating	Maximum Number 1-Inch (25.4 mm) Space	Poles	Enclosure Type	Box Size	Wire Size Range Cu/Al 60 °C or 75 °C for Main Lugs	Catalog Number
40	—	—	Outdoor	5R	#8–#2	**BR40SPA** ①
50	—	—	Outdoor	5R	#8–#2	**BR50SPA** ②

Notes

① Includes a GFCB240 breaker, factory installed.

② Includes a GFCB250 breaker, factory installed.

Riser Panel

Contents—BR Specialty Products

Description	*Page*
Overview	V1-T1-42
BR Specialty Products	
BR Quick Connect Neutral Loadcenters	V1-T1-57
Spa Panels	V1-T1-58
Riser Panel	
Type BR Renovation Loadcenter	V1-T1-60
Type BR Retrofit Interior Kits	V1-T1-73
BR Circuit Breakers	V1-T1-76

Riser Panel

Product Description

Eaton's Riser Panel is a loadcenter with an offset interior to allow riser cables to pass through the enlarged gutter. By using lay-in tap lugs, the contractor is able to simply strip off a length of the riser cable's insulation, and tap off to the riser panel's main lugs. These panels are used in the construction of assisted living homes, dormitories, public housing complexes and apartments.

Product Selection

BR1224L125RIS

Riser Panel

Main Ampere Rating	Maximum Number 1-Inch (25.4 mm) Space	Circuits	Enclosure Type	Box Size	Wire Size Range Cu/Al 60 °C or 75 °C for Main Lugs	Catalog Number
125	12	24	Indoor	C4	#6–2/0	**BR1224L125RIS**
125	12	24	Indoor	C4	#6–2/0	**BR1224L125RISBP** ①
125	20	24	Indoor	C4	#6–2/0	**BR2024L125RIS**
125	20	24	Indoor	C4	#6–2/0	**BR2024L125RISBP** ①
125	20	30	Indoor	C2	#6–2/0	**BR2030L125RIS**
200	30	40	Indoor	D1	#1–300	**BR3040L200RIS**

BRGUTTER (Shown with Loadcenter)

Riser Panel Accessories

Catalog Number
BRGUTTER ②
GTAP250

Notes

① Bulk-packaged loadcenter without carton. Must be ordered in multiples of 16.

② Refer to **Page V1-T1-68** for dimensions. BRGUTTER is box size C2.

Accessories

For riser panels not shown, contact the Flex Center at 1-800-330-6479 for both CH and BR riser panels.

BR Renovation Loadcenters

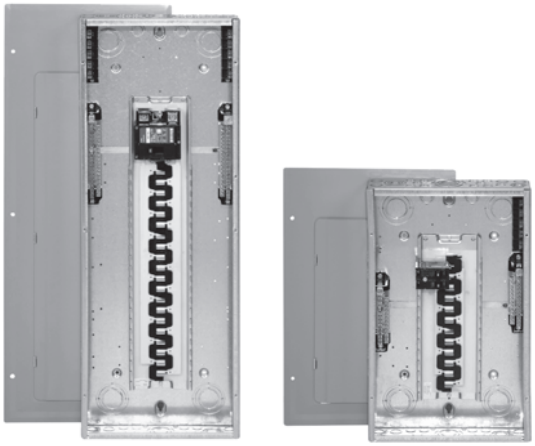

Contents—BR Specialty Products

Description	*Page*
Overview	**V1-T1-42**
BR Specialty Products	
BR Quick Connect Neutral Loadcenters	**V1-T1-57**
Spa Panels	**V1-T1-58**
Riser Panel	**V1-T1-59**
Type BR Renovation Loadcenter Options and Accessories	**V1-T1-61**
Type BR Retrofit Interior Kits	**V1-T1-73**
BR Circuit Breakers	**V1-T1-76**

Type BR Renovation Loadcenter

Product Description

- Available in 10, 20, 30 and 40 circuit main breaker styles
- Designed to replace existing loadcenters and fuse boxes
- Type BR loadcenter packaged with circuit breakers
- Factory-installed 5-circuit terminal block(s)
- Twin-stacked neutral design

Quick-Pro℠

All you need to know to save time and make more money. Specified on certain Eaton products, the Quick-Pro symbol allows for immediate recognition of products that are designed for straightforward installation. When you see Quick-Pro, you know you can install quickly—sometimes up to 50% less than the usual installation time—and move on to your next job.

Features, Benefits and Functions

- Factory-installed terminal block(s) allows installer to terminate existing short wires without using wire nuts or junction boxes
- Twin-stacked neutrals are mounted up high in the loadcenter, which allows for all neutral and ground wires to be terminated in the top half of the loadcenter
- Specifically designed for the service contractor—this is the ONLY renovation line in the industry
- Single-pole and two-pole breakers included
- 10-year warranty on loadcenter and breakers

Product Selection

BR2020B100RN

BR Value Packs ①

Main Breaker Type	Description	Wire Size Range	Number of 5-Circuit Terminal Blocks	Single-Pole Breakers	Two-Pole Breakers	Catalog Number
BR 10 kAIC	Single-phase 100 A 10k main breaker 10/20 circuit surface-mount box is 11.75" wide x 13" tall	#6–1/0	0	(2) BR115	(1) BR230	**BR1020B100SRNV**
	Single-phase 100 A 10k main breaker 10/20 circuit flush-mount box is 11.75" wide x 13" tall		0	(2) BR115	(1) BR230	**BR1020B100FRNV**

Note

① Indoor enclosure type.

Options and Accessories

BRSF125

3BRS225

BRL200

TDL

Field Installation Kits and Parts

Number of Poles	Ampere Rating	Number of 1-Inch (25.4 mm) Spaces Needed	Wire Size Range Cu/Al 60 °C or 75 °C	Ordering Quantity ①	Catalog Number
Main and Sub-Feed Lug Blocks					
2	125	2	#8–2/0	1	**BRSF125**
	150	2	#8–2/0	1	**BRSF150** ②
	225	4	#2–300 kcmil	1	**BRS225**
3	150	3	#8–2/0	1	**3BRSF150** ②
	225	6	#2–300 kcmil	1	**3BRS225**
Main Lugs					
Two-pole, 200 A stud mounted (includes deadfront filler plate)			#1–300 kcmil	1	**BRL200**
Neutral/ground lug Add-on neutral or ground lug			#2/0 maximum	1	**NL20**
			#3/0 maximum	1	**NL30**
			300 kcmil maximum	1	**NL300**
Filler Plates					
1-inch (25.4 mm) circuit breaker space				25	**BRFP**
BW main circuit breaker space (with hardware)				1	**BWFP**
Door lock —12–42 circuits, and 100–225 A				1	**TDL**
Door lock—4–8 circuits, 125 A				1	**CH9FL**
ANSI-61 light gray touchup paint for current loadcenters				1	**SPC61**
Isolated neutral assembly (computer circuits)				1	**BINA**
Circuit directory—adhesive backed				10	**TCD**
Cover screws				25	**LCCS**
Cover replacement latch (gray) 14-5/16 (363.5 mm) wide loadcenters only				1	**BRRL**
Circuit marking strip (next to breaker)				10	**BRMS**
Circuit identification label (preprinted breaker labels)				25	**CHBL**
Series rated caution label				25	**SRL**
Bonding strip with screw				1	**BSSUSE**

Notes

① Must be purchased in multiples of ordering quantities indicated.
② #8–2/0 wire size range is 75 °C rated only.

Type BR Loadcenter with Mechanical Interlock Kit

Contents

Description	*Page*
Overview	**V1-T1-42**
BR Specialty Products	
BR Quick Connect Neutral Loadcenters	**V1-T1-57**
Spa Panels	**V1-T1-58**
Riser Panel	**V1-T1-59**
Type BR Renovation Loadcenter	**V1-T1-60**
Type BR Retrofit Interior Kits	**V1-T1-73**
Type BR Mechanical Interlock Kits	
BR Circuit Breakers	
Product Selection	**V1-T1-77**
Circuit Breaker Accessories	**V1-T1-85**
Wiring Diagrams	**V1-T1-87**

Type BR Mechanical Interlock Kits

Product Description

With the aging electrical infrastructure and frequent severe storms, power outages are becoming more and more frequent, affecting thousands of people nationwide. Eaton mechanical interlock kit provides an easy and cost-effective solution when using backup emergency power.

This solution expands the robust line of emergency power products and accessories.

Features and Benefits

- Prevents utility and generator supplies from being on at the same time
- Protects utility linemen from dangerous generator backfeed
- Robust interlock design
- Offered in two unique styles for almost any BR loadcenter, which can reduce inventory levels
- Quick and easy installation—drill points or fixtures for pilot holes are provided on all applicable BR loadcenters; no additional assembly is required

Standards and Certifications

- UL 67 Listed—For use with BR loadcenters
- Meets NEC® Article 702

Product Selection

Each mechanical interlock kit includes:

- Interlock assembly
- Hold down kit ①
- New labels
- Necessary screws

Warranty information:

- 10-year warranty on all Type BR circuit breakers and loadcenters
- Refer to Eaton for complete warranty details

Mechanical Interlock Kits ②

	Description	Catalog Number
BRMIKBR	Single	**BRMIKBR**
	Bulk pack ③	**BRMIKBRBP**
BRMIKCSR	Single	**BRMIKCSR**
	Bulk pack ③	**BRMIKCSRBP**

Notes

① For breakers under 70 A used in backfed applications, add "B" to the end of the catalog string to get the appropriate "hold-down" version.
② Clamshell packaged.
③ Bulk pack contains 10 units, individually packaged.

1

Mechanical Interlock Cover

Covers mechanically interlock two breakers—Type BW or CSR main breaker with a Type BR branch breaker.

BR816B100

Mechanical Interlock Cover

Fits Loadcenter Catalog Numbers	Mechanical Interlock Trim/Deadfront Catalog Numbers	Mechanical Interlock Kit Catalog Numbers
Indoor		
BR816B100	BRCOVC10M	BRMIKBR
BR816N100		
BR1212B100	BRCOVC12M	
BR1220B100		
BR1220H100		
BR1224N125	BRCOVC13M	
BR1616B100	BRCOVC16M	
BR1620B100		
BR1624B100		
BR1624B125	BRCOVC17M	
BR1624N125		
BR2020B100, BR2020BC100 BR2020H100, BR2020HC100	BRCOVC22M	
BR2024H100		
BR2020HC100		
BR2030B100		
BR2040B100		
BR2024B125	BRCOVC23M	
BR2024N125, BR2024NC125		
BR3030B100, BR3030BC100	BRCOVC59M	
BR3030H100, BR3030HC100		
Raintight		
BR1020B100R	BR3RDF1M	Field-installed interlock kits not available for these catalog numbers.
BR1224B100R		
BR1224N125R, BR1224NC125R		
BR1624B100R	BR3RDF2M	
BR1624N125R		
BR2024B100R, BR2024B125R	BR3RDF4M	
BR2024N125R, BR2024NC125R		

BR4040B200

Mechanical Interlock Cover, continued

Fits Loadcenter Catalog Numbers	Mechanical Interlock Trim/Deadfront Catalog Numbers	Mechanical Interlock Kit Catalog Numbers
Indoor		
BR1630B150	BRCOV16C4FM	BRMIKCSR
BR1224N200		
BR1632B200		
BR1632N200		
BR2030B150	BRCOV20C4FM	
BR2030H150		
BR2040B150		
BR2040B200, BR2040BC200	BRCOV20D1FM	
BR2040H200		
BR2040N200, BR2040NC200		
BR2430B150, BR2430BC150	BRCOV30G1FM	
BR3030B150		
BR3030H150		
BR3040B150		
BR2440B200		
BR2440N200		
BR3040B200, BR3040BC200		
BR3040N200, BR3040NC200		
BR3040H200		
BR4040B200, BR4040BC200	BRCOV40L1FM	
BR4040H200		
BR4040N200, BR4040NC200		
BR4242B225	BRCOV42L2FM	
Raintight		
BR816B150RF	BR3RDF5M ①	
BR816B200RF		
BR816N200RF		
BR1224N200R		
BR2030B150R	BR3RDF11M ①	
BR2040B150R		
BR2040B200R		
BR2040B225R		
BR2040N200R		
BR3030B150R	BR3RDF12M ①	
BR3040B200R		
BR3040N200R		
BR4040B200R	BR3RDF13M ①	
BR4040N200R		
BR48B200RF	BR3RDF14M	
BR4242B225R	BR3RDF15M ①	
Mechanical Interlock Loadcenter Replacement Covers ②		
BR2020B100M, BR2020BC100M	BRCOV20C2FM	Field-installed interlock kits not available for these catalog numbers.
BR2024H100M		
BR3030BC100M	BRCOV30D1FM	

Notes

① Deadfront only.

② Can only be provided as replacement covers for factory-installed mechanically interlock loadcenters.

DS300H2

Field Installation Rainproof Conduit Hubs

Description	Conduit Size Inches (mm)	Ordering Quantity ①	Catalog Number
Group 1—for use with 70, 100 and 125 A MLO and MCB loadcenters and circuit breaker enclosures and the following 150 and 200 A panels: BR48B200RF	0.75 (19.1)	1	**DS075H1**
	1.00 (25.4)	1	**DS100H1**
	1.25 (31.8)	1	**DS125H1**
	1.50 (38.1)	1	**DS150H1**
	2.00 (50.8)	1	**DS200H1**
Group 2—for use with 150, 200 and 225 A MLO and MCB loadcenters and circuit breaker enclosures except for the following 200 A loadcenters: BR48B200RF. Also for use with 400 and 600 A loadcenters and New York City loadcenters manufactured after November 1, 2005	2.00 (50.8)	1	**DS200H2**
	2.50 (63.5)	1	**DS250H2**
	3.00 (76.2)	1	**DS300H2**
Type H conduit hubs for loadcenters PL0724R and S3100RN	0.75 (19.1)	1	**RH75P**
	1.00 (25.4)	1	**RH100P**
	1.25 (31.8)	1	**RH125P**
	1.50 (38.1)	1	**RH150P**
Adapter kit—Allows Installing a Group 1 hub on devices arranged for Group 2 hubs	—	1	**DS900AP**
Group 1 small blank hub plate with bump	—	1	**DS900CP1**
Group 2 Large blank hub plate with bump	—	1	**DS900CP2**

GBK14

BRGBK39512

Ground Bar Kits

Description (See Legend)	Length Inches (mm)	Ordering Quantity ①	Catalog Number
●○○○○●○	2.54 (64.5)	1	**GBK5** ②
●○○○○●○■	3.59 (91.2)	1	**GBK520** ②
●○○○○●○○○○○○	4.29 (109.0)	1	**GBK10** ②
●○○○○●○○○○○○■	5.34 (135.6)	1	**GBK1020** ②
◒●◒◒◒⬓◒●◒⬓◒◒◒	4.61 (117.1)	1	**GBK13** ②
●○○○○●○○○○○○○○○○	5.69 (144.5)	1	**GBK14** ②
●○○○○●○○○○○○○○○○■	6.74 (171.2)	1	**GBK1420** ②
●○○○○●○○○○○○○○○○○○○○○○	8.14 (206.8)	1	**GBK21** ②
●○○○○●○○○○○○○○○○○○○○○○○■	9.19 (233.4)	1	**GBK2120** ②
◒⬓◒●◒⬓◒◒◒⬓◒●◒⬓◒◒◒⬓◒	5.78 (146.8)	1	**BRGBK39512** ③④
○○○○○	1.84 (46.7)	1	**GB4NM** ⑤

Ground Bar Legend

- ○ (3) #14–10 Cu/Al or (1) #14–4 Cu/Al
- ■ (1) #6–2/0 Cu/Al
- ⬓ (1) #14–1/0 Cu/Al or (3) #14–10 Cu/Al
- ◒ (1) #14–6 Cu/Al or (2) #14–12 Cu/Al
- ● Mounting Hole

Notes

① Must be purchased in multiples of ordering quantities indicated.
② Distance between mounting holes is 1.75 inches (44.5 mm).
③ For single- and three-phase 400 and 600 A applications.
④ Distance between mounting holes is 2.34 inches (59.5 mm).
⑤ For non-metallic enclosures. Snaps into molded base.

Dimensions

Approximate Dimensions in Inches (mm)

Residential/Commercial/New York City Loadcenters, Unit Enclosures—Box Sizes

Note: Box sizes do not include covers/fronts.

Residential Loadcenters—NEMA Type 1 Indoor

Box Size	Height	Width	Depth
A1	15.00 (381.0)	11.25 (285.8)	3.75 (95.3)
B1	16.75 (425.5)	14.31 (363.5)	3.88 (98.4)
B2	18.75 (476.3)	14.31 (363.5)	3.88 (98.4)
C1	21.00 (533.4)	14.31 (363.5)	3.88 (98.4)
C2	23.00 (584.2)	14.31 (363.5)	3.88 (98.4)
C4	27.00 (685.8)	14.31 (363.5)	3.88 (98.4)
D1	29.13 (739.8)	14.31 (363.5)	3.88 (98.4)
G1	34.13 (866.8)	14.31 (363.5)	3.88 (98.4)
L1	39.00 (990.6)	14.31 (363.5)	3.88 (98.4)
L2	45.00 (1143.0)	14.31 (363.5)	3.88 (98.4)
L3	48.38 (1228.3)	14.31 (363.5)	3.88 (98.4)
2	8.63 (219.1)	5.00 (127.0)	3.50 (88.9)
3	9.44 (239.7)	4.50 (114.3)	3.00 (76.2)
4	13.00 (330.2)	11.00 (279.4)	3.56 (90.5)
5	9.44 (239.7)	4.50 (114.3)	3.00 (76.2)
6	12.00 (304.8)	6.88 (174.6)	4.50 (114.3)
7	13.00 (330.2)	11.00 (279.4)	3.56 (90.5)
9	14.50 (368.3)	6.50 (165.1)	3.50 (88.9)

Residential Loadcenters—NEMA Type 3R Outdoor

Box Size	Height	Width	Depth
B1R	16.75 (425.5)	14.31 (363.5)	5.19 (131.8)
B2R	18.75 (476.3)	14.31 (363.5)	5.19 (131.8)
C3R	25.00 (635.0)	14.31 (363.5)	5.19 (131.8)
D1R	29.13 (739.8)	14.31 (363.5)	5.19 (131.8)
G1R	34.13 (866.8)	14.31 (363.5)	5.19 (131.8)
L1R	39.00 (990.6)	14.31 (363.5)	5.19 (131.8)
L2R	45.00 (1143.0)	14.31 (363.5)	5.19 (131.8)
L3R	48.75 (1238.2)	14.31 (363.5)	5.19 (131.8)
2R	8.63 (219.1)	5.00 (127.0)	3.50 (88.9)
3R	9.44 (239.7)	4.50 (114.3)	3.00 (76.2)
4R	13.00 (330.2)	11.00 (279.4)	3.56 (90.5)
5R	9.44 (239.7)	4.50 (114.3)	3.00 (76.2)
6R	11.75 (298.5)	6.50 (165.1)	4.50 (114.3)
7R	13.00 (330.2)	11.00 (279.4)	3.56 (90.5)
8R	27.00 (685.8)	10.50 (266.7)	4.75 (120.7)
9R	14.25 (362.0)	6.50 (165.1)	4.00 (101.6)
C1R	21.00 (533.4)	14.31 (363.5)	5.19 (131.8)

Commercial Loadcenters—NEMA Type 1 Indoor

Box Size	Height	Width	Depth
19	44.00 (1117.6)	16.16 (410.4)	6.25 (158.8)
20	44.00 (1117.6)	16.16 (410.4)	6.25 (158.8)
22	54.00 (1371.6)	16.22 (412.0)	6.31 (160.3)
24	66.50 (1689.1)	16.22 (412.0)	6.31 (160.3)

Commercial Loadcenters—NEMA Type 3R Outdoor

Box Size	Height	Width	Depth
42	38.00 (965.2)	16.31 (414.3)	6.38 (161.9)
43	44.00 (1117.6)	16.31 (414.3)	6.38 (161.9)
46	54.00 (1371.6)	16.31 (414.3)	6.38 (161.9)
47	66.56 (1690.7)	16.31 (414.3)	6.38 (161.9)

New York City Loadcenters—NEMA Type 1 Indoor

Box Size	Height	Width	Depth
A	38.00 (965.2)	18.13 (460.4)	5.00 (127.0)
B	44.00 (1117.6)	18.13 (460.4)	5.00 (127.0)
C	66.50 (1689.1)	18.13 (460.4)	6.25 (158.8)

ECC Unit Enclosures—NEMA Type 1 Indoor

Height	Width	Depth
23.25 (590.6)	8.88 (225.4)	4.50 (114.3)

ECC Unit Enclosures—NEMA Type 3R Outdoor

Height	Width	Depth
23.68 (601.7)	9.31 (236.5)	5.44 (138.1)

1

Approximate Dimensions in Inches (mm)

Residential Loadcenter Knockouts

Knockouts for Box Sizes A1, B1, B2, C1, C2, C4, D1, G1, L1, L2, B1R, B2R, C1R, C3R, D1R, G1R, L1R, L2R

Code	Diameter				
A	0.50 (12.7)	0.75 (19.1)	—	—	—
B	0.50 (12.7)	—	—	—	—
C	0.50 (12.7)	1.25 (31.8)	1.50 (38.1)	2.00 (50.8)	2.50 (63.5)
D	1.25 (31.8)	1.25 (31.8)	2.00 (50.8)	2.50 (63.5)	—
E	0.50 (12.7)	0.75 (19.1)	1.00 (25.4)	—	—
F	0.50 (12.7)	0.75 (19.1)	1.00 (25.4)	1.50 (38.1)	2.00 (50.8)
G	1.25 (31.8)	1.50 (38.1)	2.00 (50.8)	—	—
H	0.50 (12.7)	0.75 (19.1)	1.00 (25.4)	1.25 (31.8)	1.50 (38.1)
I	1.00 (25.4)	1.25 (31.8)	1.50 (38.1)	2.00 (50.8)	2.50 (63.5)
J	1.00 (25.4)	1.25 (31.8)	1.50 (38.1)	—	—

Residential NEMA Type 1 Indoor and NEMA Type 3R Outdoor Enclosures

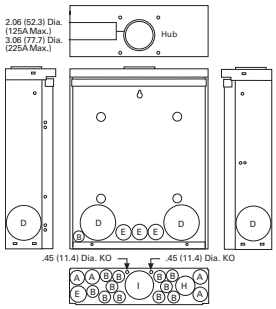

Outdoor Boxes B1R, B2R, C1R, C3R, D1R, G1R, L1R, L2R

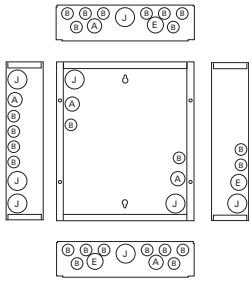

Indoor Boxes A1

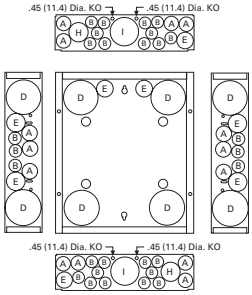

Indoor Boxes B1, B2

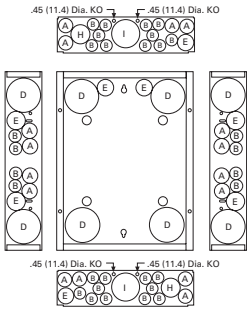

Indoor Boxes C1, C2, C4, D1, G1, L1, L2

Approximate Dimensions in Inches (mm)

Knockouts for Box Sizes 3, 4, 5, 6, 7, 9, 2R, 3R, 4R, 5R, 6R, 7R, 8R, 9R

Code	Diameter			
A	0.50 (12.7)	—	—	—
B	0.50 (12.7)	0.75 (19.1)	—	—
C	0.50 (12.7)	0.75 (19.1)	1.00 (25.4)	—
D	0.50 (12.7)	0.75 (19.1)	1.00 (25.4)	1.25 (31.8)
E	0.75 (19.1)	1.00 (25.4)	1.25 (31.8)	—
F	0.75 (19.1)	1.00 (25.4)	1.25 (31.8)	1.50 (38.1)
G	1.00 (25.4)	1.25 (31.8)	1.50 (38.1)	—
H	1.00 (25.4)	1.25 (31.8)	1.50 (38.1)	2.00 (50.8)
I	1.25 (31.8)	1.50 (38.1)	2.00 (50.8)	—

Residential NEMA Type 1 Indoor and NEMA Type 3R Outdoor Enclosures

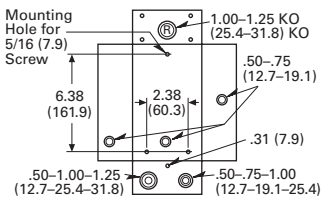

Box 2, 2R

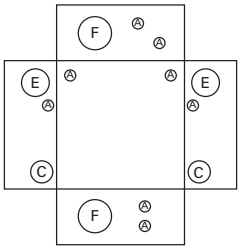

Box 3

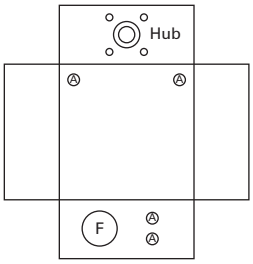

Box 3R

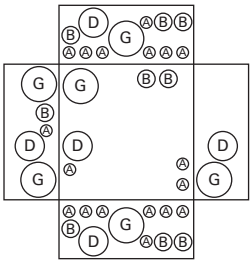

Box 4

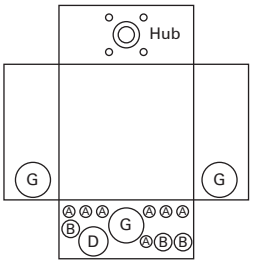

Box 4R

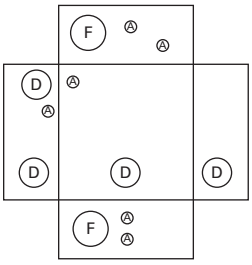

Box 5

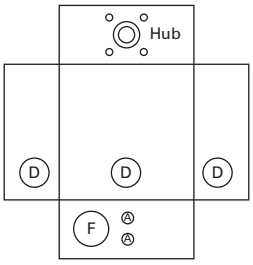

Box 5R

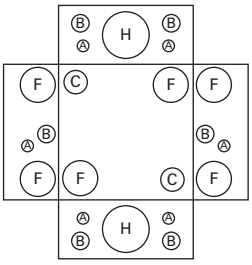

Box 6

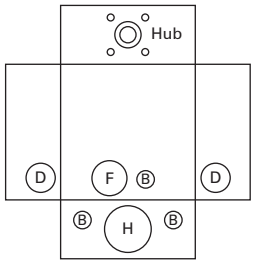

Box 6R

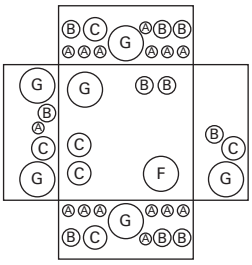

Box 7

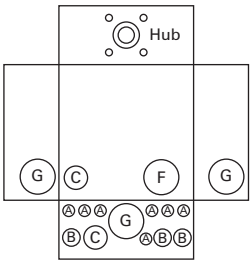

Box 7R

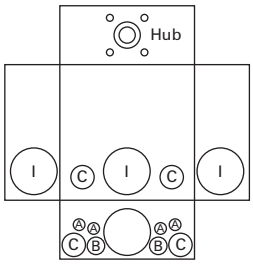

Box 8R

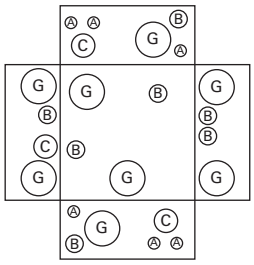

Box 9

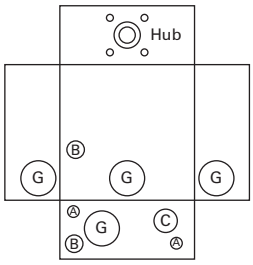

Box 9R

1

Approximate Dimensions in Inches (mm)

Commercial Loadcenter Knockouts

NEMA Type 1 Indoor Commercial Enclosures Knockouts for Box Sizes 19, 20, 22, 24

Code	Diameter			
A	0.50 (12.7)	—	—	—
B	0.50 (12.7)	0.75 (19.1)	—	—
C	0.75 (19.1)	1.00 (25.4)	1.50 (38.1)	—
D	1.50 (38.1)	2.00 (50.8)	2.50 (63.5)	3.00 (76.2)
E	2.00 (50.8)	2.50 (63.5)	3.00 (76.2)	—
F	2.50 (63.5)	3.00 (76.2)	3.50 (88.9)	—

NEMA Type 3R Outdoor Commercial Enclosures Knockouts for Box Sizes 42, 43, 46, 47

Code	Diameter			
A	0.50 (12.7)	—	—	—
B	0.50 (12.7)	0.75 (19.1)	—	—
C	0.75 (19.1)	1.00 (25.4)	1.25 (31.8)	—
D	1.50 (38.1)	2.00 (50.8)	2.50 (63.5)	—
E	2.00 (50.8)	2.50 (63.5)	3.00 (76.2)	—
F	2.50 (63.5)	3.00 (76.2)	3.50 (88.9)	—
G	1.25 (31.8)	1.50 (38.1)	2.00 (50.8)	2.50 (63.5)
H	3.25 (82.6) Sq.	—	—	—

Unit Enclosure Knockouts, Types ECB and ECC Knockouts

Code	Diameter				
NEMA Type 1 Indoor (Flush and Surface Trims)					
A	0.50 (12.7)	—	—	—	—
B	1.25 (31.8)	1.50 (38.1)	1.75 (44.5)	2.00 (50.8)	2.50 (63.5)
NEMA Type 3R Outdoor					
A	0.50 (12.7)	—	—	—	—
B	1.25 (31.8)	1.50 (38.1)	1.75 (44.5)	2.00 (50.8)	2.50 (63.5)

Indoor Commercial Enclosures

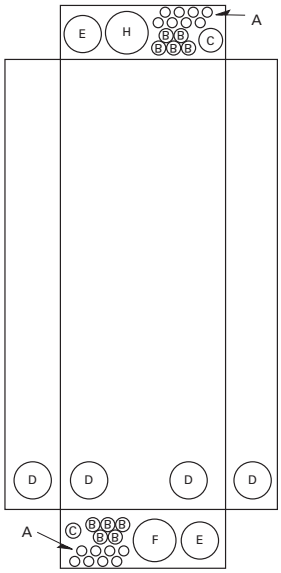

Box 19, 20

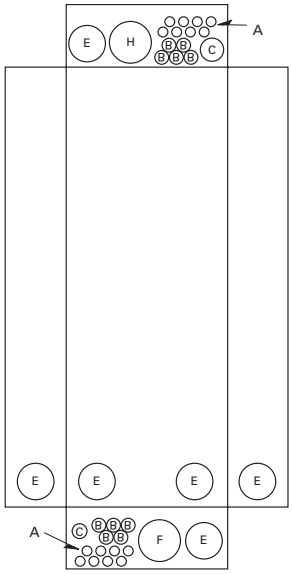

Box 22, 24

Outdoor Commercial Enclosures

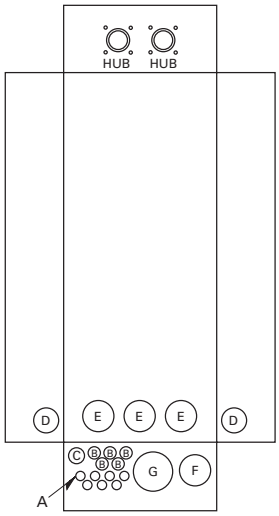

Box 42

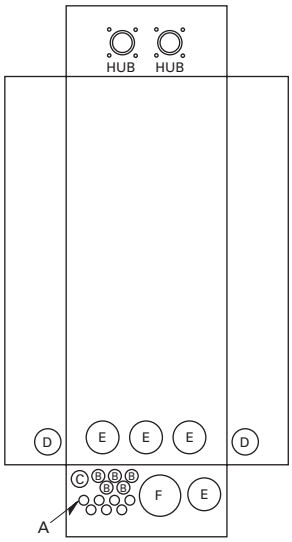

Box 43, 46, 47

Unit Enclosure Knockouts

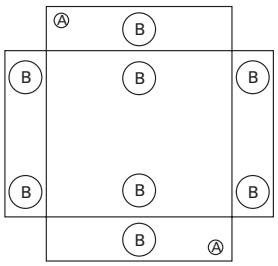

NEMA Type 1—Indoor

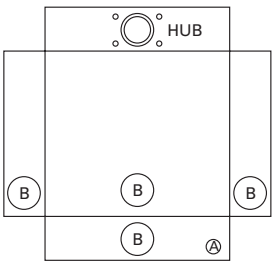

NEMA Type 3R—Outdoor

Technical Data and Specifications

General

A. The Contractor shall furnish and install deadfront loadcenters incorporating circuit breakers of the number, rating and type as specified herein and as shown on the contract drawings.

B. The loadcenter and all components shall be designed, manufactured and tested in accordance with the latest applicable standards of UL, NEMA and NEC including:

1. UL 67—Standards for Panelboards.

C. UL 50—Standards for Cabinets and Boxes.

D. UL 489—Standards for Molded Case Circuit Breakers.

E. UL 869—Standards for Service Equipment.

F. Federal Specification W-C 375B—Circuit Breakers.

G. Federal Specification W-C P115b—Panel Power Distribution Type 1, Class 2.

Qualifications

A. The manufacturer of the loadcenter shall be the manufacturer of the circuit breaker within the loadcenter.

B. For the equipment specified herein, the manufacturer shall be ISO 9000 certified.

C. The manufacturer of this equipment shall have produced similar electrical equipment for a minimum period of seven (7) years.

Manufacturers

A. Eaton.

Ratings

A. Loadcenters shall be rated for 120/240 Vac and shall have short-circuit ratings as shown on the drawings or as herein scheduled, but not less than 10,000 amperes rms symmetrical.

B. Circuit breakers shall be a minimum of 125 A frame. Circuit breakers 15 through 125 A trip size shall take up the same pole spacing.

C. Loadcenters shall be labeled with a UL short-circuit rating. When series combination ratings are applied with integral or remote upstream devices, a label shall be provided. Series combination ratings shall cover all trip ratings of installed frames. It shall state the conditions of the UL series ratings including:

1. Size and type of upstream device.

2. Branch devices that can be used.

3. UL series short circuit rating.

Construction

A. All interiors, with the exception of the branch circuit breakers, shall be completely factory assembled with main breakers, main lugs, or no main device.

B. Interiors shall be designed so that circuit breakers can be replaced without disturbing adjacent units and without removing the main bus connectors and shall be designed so that circuits may be changed without machining, drilling, or tapping.

C. Physical means shall be provided to prevent the installation of more overcurrent devices than that number for which the enclosure was designed, rated and approved. Half-size breakers shall have a UL listed rejection tab over the line terminals. Loadcenter interiors must have notched stabs to accept these rejection tab class CTL breakers, if required and approved.

Bus

A. Busbars for the main and cross connectors shall be [tin-plated aluminum] [copper] in accordance with Underwriters Laboratories standards. Busing shall be braced throughout to conform to industry standard practice governing short-circuit stresses in loadcenters.

Note: Note to spec writer—select one (copper available in limited ratings).

B. Neutral busing shall have a suitable lug for each outgoing feeder requiring a neutral connection of same ampacity as branch.

Wiring/Termination

A. All wire connectors and terminals shall be of the anti-turn solderless type and shall be suitable for copper or aluminum wire of the sizes indicated. All connectors must meet the "Requirements for Wire Connectors and Soldering Lugs" as stated in UL 486B.

B. All loadcenters where marked shall be suitable for use with 60 °C or 75 °C rated wire.

Circuit Breakers

A. Circuit breakers shall be molded case type. Circuit breakers shall have four-rivet construction (GFI Type—5 rivets). Multipole circuit breakers shall be of a stack pole design to provide electrical phase isolation.

B. Each pole of the circuit breaker will provide inverse time delay overload and instantaneous short-circuit protection by means of both thermal and magnetic sensors.

C. The circuit breaker calibration shall not be affected by environmental changes in relative humidity. The thermal bimetal element shall be welded to the steel frame and calibration shall be set independent of the molded case by computer controlled equipment.

D. All circuit breakers shall be operated by a toggle-type handle and multipole circuit breakers shall have an internal common trip mechanism. The circuit breakers shall incorporate trip mechanisms that are mechanically trip-free from the handle. The handle position shall provide visual trip indication.

E. Contacts shall be of non-welding silver alloy.

F. All circuit breakers shall have the trip rating inscribed on the handle on each circuit breaker pole. Also, unique color-coded cases that indicate the UL listed 10 kA or 22 kA interrupting ratings. Breakers shall be able to be used as main or branch disconnect devices.

G. Branch circuit breakers may also be used in the 1/2-inch (12.7 mm) per pole ratings that include two-pole 1-inch (25.4 mm) wide modules and four-pole 2-inch (50.8 mm) wide modules. Two-pole circuit breakers must incorporate a common trip mechanism. The exclusive CTL rejection tab feature shall be provided to limit the number of branch devices for a loadcenter to 42, in compliance with NEC Article 384.15.

H. Circuit breakers shall be completely enclosed in a molded case of thermoset material. No internal aluminum parts shall be used. All internal ferrous parts shall be plated to prevent corrosion.

I. All terminals shall be listed for use with copper or aluminum conductors. Terminals shall be of the box lug or clamp type design. The terminals shall meet UL 486B requirements and shall be suitable for use with either 60 °C or 75 °C wire.

J. The calibrated bimetal assembly shall be mechanically isolated from the load terminal using a flexible braided copper shunt wire, such that movement of the terminals due to twisting and overtorquing does not affect breaker calibration.

K. Breakers shall be SWD rated and/or HACR rated as required.

L. Arc Fault Interrupting circuit breakers, (AFI), shall be provided on all 15 and 20 A single-phase 120/240 Vac circuits except those indicated as remote controlled breakers. AFI breakers shall be "Classified for mitigating the effects of arcing faults," or conforming to UL Standard 1699 and as defined by Article 210.12 Section A of the 1999 NEC Code.

Surge Protection Devices

See Volume 1, Tab 2 for complete details on surge protection.

Enclosures

A. Loadcenter shall have NEMA Type 1 general purpose or NEMA Type 3R rainproof enclosures as indicated on the drawings and shall be surface or combination flush/surface mounted except where noted.

B. Boxes shall be made from galvanized sheet steel having multiple knockouts. Rainproof boxes shall use galvanized steel or an approved coating system which meets or exceeds standards for outdoor NEMA Type 3R enclosures. Boxes shall be of sufficient size to provide at least a minimum code gutter space on all sides.

C. The deadfront shall have an easy adjustment feature for flush applications.

D. Boxes shall be factory assembled into a single rigid structure.

E. Unless otherwise noted on drawings, hinged doors covering all circuit breaker handles shall be included in all trims. Trim doors shall not uncover any live parts in making the circuit breaker handles accessible. If key locks are required, all locks shall be keyed alike.

F. Combination trims for flush and surface panels shall be flat and shall overlap the box by at least 5/8-inch (15.9 mm) all around. Trims shall be mounted by a screwdriver without the need for special tools.

Finish

A. Trims shall be bonderized and finished with a light gray ANSI-61 enamel. The paint finish shall be of a type to which field applied paint will adhere.

Factory Testing

A. The standard factory tests shall be performed on the equipment provided under this section. All tests shall be in accordance with the latest version of UL and NEMA.

Type BR Retrofit Interior

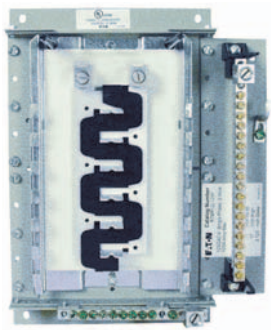

Type BR Retrofit Adjustable Interior

Type BR Retrofit Interior Collar and Assembly with Trim

Contents—BR Specialty Products

Description	*Page*
Overview	V1-T1-42
BR Specialty Products	
BR Quick Connect Neutral Loadcenters	V1-T1-57
Spa Panels	V1-T1-58
Riser Panel	V1-T1-59
Type BR Renovation Loadcenter	V1-T1-60
Type BR Mechanical Interlock Kits	V1-T1-62
Type BR Retrofit Interior Kits	
BR Circuit Breakers	V1-T1-76

Type BR Retrofit Interior Kits

Product Description

Eaton's unique Retrofit Interior allows the customer to cost-effectively and safely upgrade an electrical service without removing the existing enclosure from the wall.

Quick-Pro℠

All you need to know to save time and make more money. Specified on certain Eaton products, the Quick-Pro symbol allows for immediate recognition of products that are designed for straightforward installation. When you see Quick-Pro, you know you can install quickly—sometimes up to 50% less than the usual installation time—and move on to your next job.

Application Description

The Retrofit Interior is designed and tested specifically for renovating an outdated electrical panel in an apartment, a condominium or a single family home. These outdated panels are being recognized by local inspectors and other authorities as a possible hazard.

Opportunities to Retrofit

- Single- or three-phase
- Main lug only or main breaker
- Up to 42 circuits
- Up to 225 A interiors, 400 A available upon request
- Available with CH breakers (3/4-inch) with copper bus or BR breakers (1-inch) with aluminum bus
- The minimum lifetime warranty for residential breakers shall be as follows:
  - 10-year warranty on all BR branch breakers and loadcenters
  - Refer to Eaton for complete warranty details

Features and Benefits

Upgrading Existing Electrical Infrastructure Is Simple

- Replaces vintage brands that have hard to find, expensive replacement breakers
- Safety upgrade to arc fault and ground fault breakers to meet current electrical codes
- Maximizes number of circuits available with compact design
- Eco-friendly in asbestos-filled environments
- Exclusive design

Save Time and Money Throughout the Installation

- Uses existing panel box and wires
- Eliminates expensive and time-consuming drywall/paint repair
- Saves 2–3 hours of installation time compared to a complete panel changeout
- Eliminates precise measurements with field-adjustable kit

Detailed Product Guide

All standard retrofit kits are suitable for a range of existing box sizes:

- Box width ranging from 14.50 to 22.00 inches (368.3 to 558.8 mm)
- Box depth ranging from 4.00 inches (101.6 mm) for BR
- Box height ranging from 21.00 to 45.00 inches (533.4 to 1143.0 mm)

For box dimensions outside of these ranges, contact the Lincoln Flex Center at 800-330-6479. Be sure to provide the existing incoming line wire size.

Standards and Certifications

- Meets 2008/2011/2014 NEC wire bending requirements
- UL 67 Listed (for UL listings for specific part numbers, see the table on the following page.

1

BR Specialty Product Selection

To select the retrofit kit:

1. From the existing box size determine which retrofit groups are suitable (may be more than one).
2. Use type of interior, number of phases, and type of main to find the selection chart.
3. Select part number from chart (if main breaker, replace XXX with specific amp rating).
4. Note that the overlap of the existing wall is the retro cover size minus the existing box size. If specific measurements are needed, communicate that you need a custom trim size.
5. Contact the Lincoln Flex Center at 800-330-6479 for pricing, lead-times, and order entry instructions.

How to Order:

1. Measure the existing panel enclosure to determine appropriate kits for your project.
2. Match the existing dimensions with the table below to obtain the correct catalog number.
3. Order your retrofit kit from a local Eaton authorized distributor.

Need assistance or can't find retrofit to fit existing enclosure?

Call Eaton's Residential Flex Center at 1-800-330-6479 or email for all your retrofit needs. Go to www.eaton.com/eccn to locate an Eaton Certified Contractor.

Retrofit Interior Kit Specifications

Five recommended groups: existing box height determines retro group size. Approximate Dimensions in Inches (mm).

		Existing Enclosure Parameters—Inches (mm)									
Catalog Number ①	**Cover ②**	**Minimum Depth**	**Maximum Depth**	**Minimum Width**	**Minimum Height**	**Phase**	**Main**	**Bus**	**Amperes ③**	**Spaces / Circuits**	**UL 67 Listed**
BR Retrofit Interiors and Covers											
RTBR8L100P	**CRTBR8ML******	3.13 (79.5)	3.63 (92.2)	10.50 (266.7)	13.00 (330.2)	Single	MLO	BR	100	16	Yes
RUBR8L100_	**CRUBR8ML******	3.75 (95.3)	6.00 (152.4)	10.50 (266.7)	13.00 (330.2)	Single	MLO	BR	100	16	Yes
RTBR12L100P	**CRTBR12ML******	3.13 (79.5)	3.63 (92.2)	10.50 (266.7)	14.50 (368.3)	Single	MLO	BR	100	24	Yes
RTBR10B100P	**CRTBR12ML******	3.13 (79.5)	3.63 (92.2)	10.50 (266.7)	14.50 (368.3)	Single	MLO	BR	100	20	Yes
RUBR12L100_	**CRUBR12ML******	3.75 (95.3)	6.00 (152.4)	10.50 (266.7)	14.50 (368.3)	Single	MLO	BR	100	24	Yes
RUBR10B100_	**CRUBR12ML******	3.75 (95.3)	6.00 (152.4)	10.50 (266.7)	14.50 (368.3)	Single	MB	BR	100	20	Yes
RTBR12L125P	**CRTBR12ML******	3.13 (79.5)	3.63 (92.2)	11.00 (279.4)	17.00 (431.8)	Single	MLO	BR	125	24	Yes
RTBR10B125P	**CRTBR12ML******	3.13 (79.5)	3.63 (92.2)	11.00 (279.4)	17.00 (431.8)	Single	MB	BR	125	20	Yes
RUBR12L125_	**CRUBR12ML******	3.75 (95.3)	6.00 (152.4)	11.00 (279.4)	17.00 (431.8)	Single	MLO	BR	125	24	Yes
RUBR10B125_	**CRUBR12ML******	3.75 (95.3)	6.00 (152.4)	11.00 (279.4)	17.00 (431.8)	Single	MB	BR	125	20	Yes
RABR20B125_	**CRABR20ML******	3.75 (95.3)	6.00 (152.4)	13.00 (330.2)	21.00 (533.4)	Single	MCB	BR	125	24	No
RABR20L125_	**CRABR20ML******	3.75 (95.3)	6.00 (152.4)	13.00 (330.2)	21.00 (533.4)	Single	MLO	BR	125	24	No
RBBR20B200_	**CRBBR20BW******	3.75 (95.3)	6.00 (152.4)	13.00 (330.2)	29.00 (736.6)	Single	MLO	BR	200	40	No
RCBR40L200_	**CRCBR40ML******	3.75 (95.3)	6.00 (152.4)	13.00 (330.2)	34.00 (863.6)	Single	MLO	BR	200	40	No
RDBR40B200_	**CRDBR40BW******	3.75 (95.3)	6.00 (152.4)	13.00 (330.2)	37.00 (939.8)	Single	MLO	BR	200	40	No

Notes

① Catalog numbers shown with "_" at the end need one of the following suffixes to denote depth:
J = 3.75–4.25
K = 4.25–5.00
L = 5.00–6.00
Example: RTBR12L125J would signify an interior set with a depth range of 3.75 to 4.25 inches.

② ****Denotes characters in the catalog number that relate to overall cover size.
Example: CRTBR12ML2620 would signify a cover 26.00 inches H x 20.00 inches W.

③ Amperes for MB panels is maximum; catalog number will reflect actual amperage of breaker included.

For UL applications, maximum cover sizes may apply.

Complete Assembly

Note: For complete assembly, interior and cover need to be ordered separately.

Adjustable Interior

- Factory installed ground and neutral bars positioned to accept existing wires
- Field adjustable depth matches existing panel box
- Adjustable height enables optional placement of the interior
- Field bondable for service entrance options

Adjustable Interior

Standard Trim and Collar

- Standard trim matches new interior
- New circuit directory for updated labeling
- Oversized collar eliminates expensive wall/paint repair

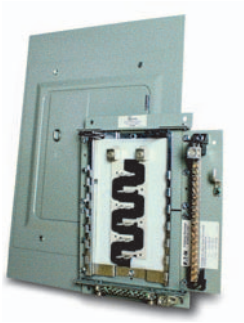

Collar and Assembly with Trim

BR Circuit Breakers

Contents

Description	*Page*
Overview	**V1-T1-42**
BR Specialty Products	
BR Quick Connect Neutral Loadcenters	**V1-T1-57**
Spa Panels	**V1-T1-58**
Riser Panel	**V1-T1-59**
Type BR Renovation Loadcenter	**V1-T1-60**
Type BR Mechanical Interlock Kits	**V1-T1-62**
Type BR Retrofit Interior Kits	**V1-T1-73**
BR Circuit Breakers	
Product Selection	**V1-T1-77**
Circuit Breaker Accessories	**V1-T1-85**
Wiring Diagrams	**V1-T1-87**

BR Circuit Breakers

Product Description

Plug-On Branch Feeder Type Arc Fault Circuit Breakers, Type BR—10 kAIC, 120 Vac and 120/240 Vac

A branch feeder type arc fault circuit interrupter is a device intended to mitigate high current arcing faults in the complete circuit, including connected cords. High current arcing faults can occur from line to neutral or line to ground. These arcing faults are in parallel with the load and produce the most energy of all arcing faults.

The branch feeder type AFCI is required in the 1999 and 2002 National Electrical Code.

The Combination Type AFCI is required in the 2005, 2008, and 2011 National Electrical Code.

Plug-On Combination Type Arc Fault Circuit Breakers, Type BR—10 kAIC, 120 Vac and 120/240 Vac

A combination type arc fault circuit interrupter is a device that includes all of the protection offered by the branch feeder AFCI (mitigation of high current arcing faults in the complete circuit, including connected cords). In addition it provides direct detection of persistent low current arcing faults down to 5 amps with associated mitigation of fire hazards in the cords connected to the outlets. High current arcing faults can occur from line to neutral or line to ground. These arcing faults are in parallel with the load and produce the most energy of all arcing faults. The current level of low current arcing faults is limited by the load.

Plug-On Ground Fault Circuit Breakers, Type GFCB and GFEP—10/22 kAIC, 120 Vac and 120/240 Vac

Ground Fault Application Notes

Single-pole GFCBs are designed for use in two-wire, 120 Vac circuits. See **Page V1-T1-87** for a typical wiring configuration.

Two-pole GFCBs are designed for use in three-wire, 120/240 Vac circuits, 120 Vac multiwire circuits employing common, neutral and two-wire, 240 Vac circuits obtained from a 120/240 Vac source.

Page V1-T1-87 shows typical wiring configurations for a 120/240 Vac multiwire circuits, and a 240 Vac, two-wire circuit. Note the "panel neutral" conductor connects to the neutral bar, even though the neutral is not included in the load circuit. This connection is necessary to supply a 120 Vac power source to the ground fault sensing circuit.

The figures are shown with a 120/240 Vac, single-phase, three-wire power source, but are also applicable to a 120/208 Vac, three-phase, four-wire power supply. For all figures, the electrical operation of the GFCB is not affected by the equipment ground.

Non-CTL Plug-On Replacement —Circuit Breakers, Type BRD—10 kAIC, 120/240 Vac

Non-CTL 10 kAIC for Replacement Purposes Only

For replacement in enclosures manufactured prior to 1968 with unnotched stabs. Circuit breakers do not have rejection tab.

Product Selection

Plug-On Circuit Breakers, Types BR—10/22/42 kAIC, 120 Vac, 120/240 Vac and 240 Vac

BR120

BR215

BR320

BRH2100

BRX2125

Type BR Breakers, 1-Inch (25.4 mm) per Pole 120/240, 10, 22 and 42 kAIC

		Single-Pole 120/240 Vac Requires One 1-Inch (25.4 mm) Space		Two-Pole 120/240 Vac Common Trip Requires Two 1-Inch (25.4 mm) Spaces			
		10 per Shelf Carton		5 per Shelf Carton			
		10 kAIC	22 kAIC	10 kAIC	22 kAIC	42 kAIC	65 kAIC
Ampere Rating	Wire Size Range Cu/Al 60 °C or 75 °C	Catalog Number	Catalog Number	Catalog Number	Catalog Number	Catalog Number	Catalog Number
10	#14–4	**BR110**	—	**BR210**	—	—	—
15	#14–4	**BR115** ①②	**BRH115**	**BR215** ③	**BRH215**	—	—
20	#14–4	**BR120** ①②	**BRH120**	**BR220** ③	**BRH220**	—	—
25	#14–4	**BR125**	**BRH125**	**BR225** ③	**BRH225**	—	—
30	#14–4	**BR130**	**BRH130**	**BR230** ③	**BRH230**	—	—
35	#14–4	**BR135**	**BRH135**	**BR235** ③	**BRH235**	—	—
40	#14–4	**BR140**	**BRH140**	**BR240** ③	**BRH240** ③	—	—
45	#14–4	—	**BRH145**	**BR245** ③	**BRH245**	—	—
50	#14–4	**BR150**	**BRH150**	**BR250** ③	**BRH250** ③	—	—
55	#14–3	**BR150**	**BRH155**	**BR255**	**BRH255**	—	—
60	#8–1/0	**BR160**	**BRH160**	**BR260**	**BRH260**	**BRHH260**	**BRX260**
70	#8–1/0	**BR170**	**BRH170**	**BR270**	**BRH270**	**BRHH270**	**BRX270**
80	#8–1/0	—	—	**BR280**	**BRH280**	**BRHH280**	**BRX280**
90	#8–1/0	—	—	**BR290**	**BRH290**	**BRHH290**	**BRX290**
100	#8–1/0	—	—	**BR2100**	**BRH2100**	**BRHH2100**	**BRX2100**
110	#8–1/0	—	—	**BR2110**	**BRH2110**	**BRHH2110**	**BRX2110**
125	#4–2/0	—	—	**BR2125**	**BRH2125**	**BRHH2125**	**BRX2125**
150	#4–2/0	—	—	**BR2150** ④	—	—	—

Notes

① One pole, 1-inch (25.4 mm) per pole circuit breakers are available with high magnetic setting for switching large tungsten lamp loads. Add suffix H to catalog number.
② Switching duty rated.
③ On the black handle breaker, add suffix "B" to the catalog number to obtain a tapped molded opening for proper use with hold-down kits.
④ For use as a branch circuit breaker in 400 and 600 ampere panels only.

All Type BR single-, two- and three-pole circuit breakers carry listing for HACR application. For circuit breakers with a shunt trip, add ST suffix.

1

BR Breakers

Type BR Breakers, 1-Inch (25.4 mm) per Pole 240 Vac, 10, 22 and 42 kAIC

Ampere Rating	Wire Size Range Cu/Al 60 °C or 75 °C	Three-Pole 240 Vac Common Trip Requires Three 1-Inch (25.4 mm) Spaces 5 per Shelf Carton 10 kAIC Catalog Number	 22 kAIC Catalog Number
10	#14–4	**BR310**	—
15	#14–4	**BR315** ①	**BRH315**
20	#14–4	**BR320** ①	**BRH320**
25	#14–4	**BR325**	**BRH325**
30	#14–4	**BR330**	**BRH330**
35	#14–4	**BR335**	**BRH335**
40	#14–4	**BR340**	**BRH340**
45	#14–4	**BR345**	**BRH345**
50	#14–4	**BR350**	**BRH350**
55	#14–3	**BR355**	**BRH355**
60	#4–1/0	**BR360**	**BRH360**
70	#4–1/0	**BR370**	**BRH370**
80	#4–1/0	**BR380**	**BRH380**
90	#4–1/0	**BR390**	**BRH390**
100	#4–1/0	**BR3100**	**BRH3100**

Plug-On Branch Feeder Type Arc Fault Circuit Breakers, Type BR—10 kAIC, 120 Vac and 120/240 Vac

Type BR AFCI Circuit Breaker

Type BR, 1-Inch (25.4 mm) Wide FIRE-GUARD AFCI Circuit Breakers

Poles	Ampere Rating	Configuration	Catalog Number
Single-pole 10 kAIC	15	AFCI	**BR115AF** ②
	20	AFCI	**BR120AF** ②
Single-pole 22 kAIC	15	AFCI	**BRH115AF**
	20	AFCI	**BRH120AF**
Two-pole 10 kAIC ③④	15	AFCI Common Trip	**BRL215AF**
	20	AFCI Common Trip	**BRL220AF**

Notes

① One pole, 1-inch (25.4 mm) per pole circuit breakers are available with high magnetic setting for switching large tungsten lamp loads. Add suffix H to catalog number.

② Clamshell packaging available with CS modification code on the end of catalog number.

③ Common trip refers to two-pole 240 V load application sourced by 120/240 Vac (see **Page V1-T1-87**).

④ Independent trip refers to two-pole multi-wire, home run or shared neutral circuits (see **Pages V1-T1-87** and **V1-T1-88**).

All Type BR single-, two- and three-pole circuit breakers carry listing for HACR application. For circuit breakers with a shunt trip, add ST suffix.

Plug-On, Dual Purpose Arc Fault/ Ground Fault Circuit Breakers, Type BR—10 kAIC, 120 Vac

BRLAFGF115

Type BR, 1-Inch (25.4 mm) wide Dual Purpose AF/GF Circuit Breakers ①②

Poles	Ampere Rating	Configuration	Catalog Number
Single-pole 10 kAIC	15	Combination AFCI GFCI	**BRLAFGF115**
	20	Combination AFCI GFCI	**BRLAFGF120**

Plug-On Combination Type Arc Fault Circuit Breakers, Type BR—10 kAIC, 120 Vac and 120/240 Vac

BRCAF115

Type BR, 1-Inch (25.4 mm) wide FIRE-GUARD Combination Type AFCI Circuit Breakers

Poles	Ampere Rating	Configuration	Catalog Number
Single-pole 10 kAIC	15	AFCI	**BRCAF115** ③
		Diagnostic AFCI	**BRACAF115**
	20	AFCI	**BRCAF120** ③
		Diagnostic AFCI	**BRACAF120**
Single-pole 22 kAIC	15	AFCI	**BRHCAF115** ③
	20	AFCI	**BRHCAF120** ③
Two-pole 10 kAIC	15	AFCI	**BRL215CAF**
	20	AFCI	**BRL220CAF**

Plug-On Ground Fault Circuit Breakers, Type GFCB and GFEP—10/22 kAIC, 120 Vac and 120/240 Vac

Type GFCB Single-Pole

Type GFCB Two-Pole

Type GFCB Ground Fault Circuit Breakers—5 Milliampere—1-Inch (25.4 mm) per Pole 120 Vac or 120/240 Vac, 10 kAIC

Ampere Rating	Wire Size Range Cu/Al 60 °C or 75 °C	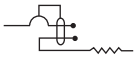 Single-Pole 120 Vac Requires One 1-Inch (25.4 mm) Space 1 per Shelf Carton Catalog Number ④	Two-Pole 120/240 Vac Common Trip Requires Two 1-Inch (25.4 mm) Spaces 1 per Shelf Carton Catalog Number
15	#14–4	**GFCB115**	**GFCB215**
20	#14–4	**GFCB120**	**GFCB220**
25	#14–4	**GFCB125**	**GFCB225**
30	#14–4	**GFCB130**	**GFCB230**
40	#14–4	**GFCB140**	**GFCB240**
50	#14–4	—	**GFCB250** ⑤
60	#14–6	—	**GFCB260**

Notes

① Breaker qualifies as combination arc fault, per UL 1699.
② Breaker qualifies as personnel protection ground fault, (5 mA) per UL 943.
③ Clamshell packaging available with CS modification code on the end of catalog number.
④ Available with bell alarm or auxiliary switch. See circuit breaker accessories on **Page V1-T1-85**.
⑤ For use with copper wire only.

Type GFCBH Ground Fault Breakers—5 Milliampere—1-Inch (25.4 mm) per Pole 120 Vac or 120/240 Vac, 22 kAIC

Ampere Rating	Wire Size Range Cu/Al 60 °C or 75 °C	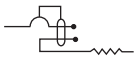 Single-Pole 120 Vac Requires One 1-Inch (25.4 mm) Space 1 per Shelf Carton Catalog Number	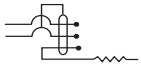 Two-Pole 120/240 Vac Common Trip Requires Two 1-Inch (25.4 mm) Spaces 1 per Shelf Carton Catalog Number
15	#14–4	**GFCBH115**	**GFCBH215**
20	#14–4	**GFCBH120**	**GFCBH220**
25	#14–4	**GFCBH125**	**GFCBH225**
30	#14–4	**GFCBH130**	**GFCBH230**

Type GFEP Ground Fault Equipment Protectors—30 Milliampere—1-Inch (25.4 mm) per Pole 120 Vac or 120/240 Vac, 10 kAIC

Ampere Rating	Wire Size Range Cu/Al 60 °C or 75 °C	Single-Pole 120 Vac Requires One 1-Inch (25.4 mm) Space 1 per Shelf Carton Catalog Number	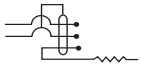 Two-Pole 120/240 Vac Common Trip Requires Two 1-Inch (25.4 mm) Space 1 per Shelf Carton Catalog Number
15	#14–4	**GFEP115**	**GFEP215**
20	#14–4	**GFEP120**	**GFEP220**
25	#14–4	**GFEP125**	**GFEP225**
30	#14–4	**GFEP130**	**GFEP230**
40	#14–4	—	**GFEP240**
50	#14–4	—	**GFEP250** ①

Note

① For use with copper wire only.

CTL Plug-On Circuit Breakers, Type BD Duplex, BQ and BQC Quadplex—10 kAIC, 120/240 Vac

BD2020

BQ2302115

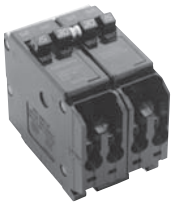

BQ230230

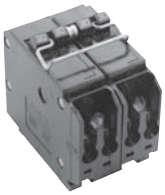

Class CTL, 1-Inch (25.4 mm) per Pole 10 kAIC—All Circuit Breakers Have Rejection Tab Feature

Type BD Duplex (UL Type BRD)			Type BQ Quadplex Independent Trip (UL Type BRD)				Type BQ Quadplex Independent Trip (UL Type BRD)		
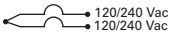			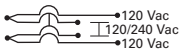				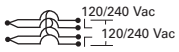		
Single-Pole ① **Requires One 1-Inch (25.4 mm) Space** **10 per Shelf Carton**			**Two-Pole ② and Single-Pole ①** **Requires Two 1-Inch (25.4 mm) Spaces** **5 per Shelf Carton**				**Two-Pole** **Requires Two 1-Inch (25.4 mm) Spaces** **5 per Shelf Carton**		
	120 Vac	**Wire Size Range**	**120 Vac**	**120/240 Vac**	**120 Vac**		**120/240 Vac**		
			Ampere Rating				**Ampere Rating**		
Ampere Rating	**Catalog Number**	**Cu/Al 65 °C or 75 °C**	**Outer Left Single-Pole**	**Center Two-Pole Independent Trip**	**Outer Right Single-Pole**	**Catalog Number**	**Outer Two-Pole Independent Trip**	**Center Two-Pole Independent Trip**	**Catalog Number**
10–10	**BD1010**	#14–4	15	20	15	**BQ2202115**	15	15	**BQ215215**
15–15	**BD1515**	#14–4	20	20	20	**BQ2202120**	15	20	**BQ215220**
15–20	**BD1520**	#14–4	15	30	15	**BQ2302115**	15	30	**BQ215230**
15–30	**BD1530**	#14–4	20	30	20	**BQ2302120**	15	40	**BQ215240**
20–15	**BD2015**	#14–4	15	40	15	**BQ2402115**	15	50	**BQ215250**
20–20	**BD2020**	#14–4	20	40	20	**BQ2402120**	20	20	**BQ220220**
20–30	**BD2030**	#14–4	15	50	15	**BQ2502115**	20	30	**BQ220230**
25–25	**BD2525**	#14–4	20	50	20	**BQ2502120**	20	40	**BQ220240**
30–15	**BD3015**	#14–4	—	—	—	**—**	20	50	**BQ220250**
30–20	**BD3020**	#14–4	—	—	—	**—**	25	25	**BQ225225**
30–30	**BD3030**	#14–4	—	—	—	**—**	30	30	**BQ230230**
30–40	**BD3040**	#14–4	—	—	—	**—**	30	40	**BQ230240**
30–50	**BD3050**	#14–4	—	—	—	**—**	30	50	**BQ230250**
50–30	**BD5030**	#14–4	—	—	—	**—**	40	40	**BQ240240**
50–50	**BD5050**	#14–4	—	—	—	**—**	40	50	**BQ240250**
—	**—**	—	—	—	—	**—**	50	50	**BQ250250**

Notes

① All 15 and 20 A single poles are switch-duty rated.

② All Type BD duplex and BQ quadplex circuit breakers carry listing for HACR applications.

1

Non-CTL Plug-On Replacement—Circuit Breakers, Type BRD—10 kAIC, 120/240 Vac

BR2020

Class Non-CTL, 1-Inch (25.4 mm) per Pole 10 kAIC—Breakers Do Not Have Rejection Tab Feature

Type BR Duplex			Type Brand BRD Quadplex Independent Trip			Type BRD Quadplex Common Trip Center and Outer Poles		
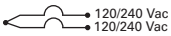			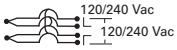			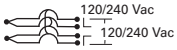		
Single-Pole Requires One 1-Inch (25.4 mm) Space 10 per Shelf Carton			**Two-Pole Requires Two 1-Inch (25.4 mm) Spaces 5 per Shelf Carton**			**Two-Pole Requires Two 1-Inch (25.4 mm) Spaces 5 per Shelf Carton**		
	120 Vac		**120/240 Vac**	**120/240 Vac**		**120/240 Vac**		
		Wire Size Range	**Ampere Rating**			**Ampere Rating**		
Ampere Rating	**Catalog Number**	**Cu/Al 65 °C or 75 °C**	**Outer Two-Pole Independent Trip**	**Center Two-Pole Independent Trip**	**Catalog Number**	**Outer Two-Pole Common Trip**	**Center Two-Pole Common Trip**	**Catalog Number**
15–15	**BR1515**	#14–4	15	15	**BR415**	15	15	**BRDC215215**
15–20	**BR1520**	#14–4	20	20	**BR420**	30	30	**BRDC230230**
20–15	**BR2015**	#14–4	30	30	**BR430**	30	40	**BRDC230240**
20–20	**BR2020**	#14–4	20	30	**BRD220230**	30	50	**BRDC230250**
30–30	**BR3030**	#14–4	30	40	**BRD230240**	—	—	—
30–50	**BR3050**	#14–4	30	50	**BRD230250**	—	—	—

CTL and Non-CTL Breakers

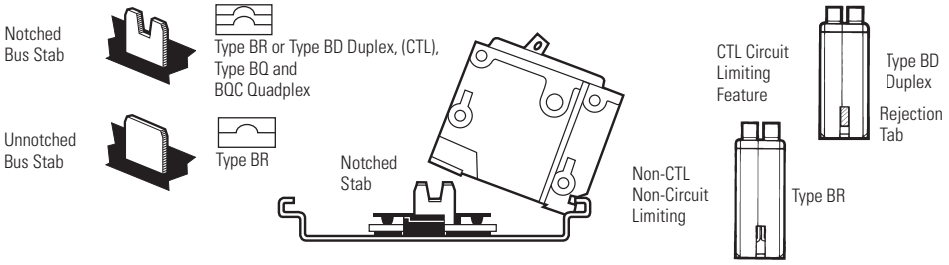

Note

Type BD Duplex, BQ and BQC Quadplex circuit breakers can be installed in Circuit Limiting (CTL) listed BR loadcenters. Type BR twin breakers can be installed in Non-CTL BR loadcenters.

Common Trip Quadplex Breakers

BQC2302115

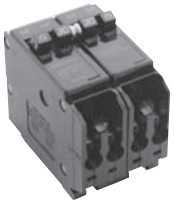

BQC2302115

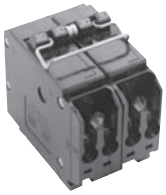

Class CTL, 1-Inch (25.4 mm) per Pole 10 kAIC—All Circuit Breakers Have Rejection Tab Feature

Type BQC Quadplex Common Trip Center Poles (UL Type BRD)

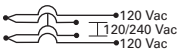

Two-Pole ① and Single-Pole ②
Requires Two 1-Inch (25.4 mm) Spaces
5 per Shelf Carton

Type BQC Quadplex Common Trip Center and Outer Poles (UL Type BRD)

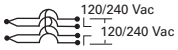

Two-Pole ①
Requires Two 1-Inch (25.4 mm) Spaces
5 per Shelf Carton

120 Vac Ampere Rating Outer Left Single-Pole	120/240 Vac Center Two-Pole Common Trip	120 Vac Outer Right Single-Pole	Catalog Number	Wire Size Range Cu/Al 65 °C or 75 °C	120/240 Vac Ampere Rating Outer Two-Pole Common Trip	Center Two-Pole Common Trip	Catalog Number
15	20	15	**BQC2202115**	#14–4	15	15	**BQC215215**
15	25	15	**BQC2252115**	#14–4	15	20	**BQC215220**
15	30	15	**BQC2302115**	#14–4	15	30	**BQC215230**
15	40	15	**BQC2402115**	#14–4	20	15	**BQC220215**
15	50	15	**BQC2502115**	#14–4	20	20	**BQC220220**
—	—	—	—	#14–4	20	30	**BQC220230**
—	—	—	—	#14–4	20	40	**BQC220240**
—	—	—	—	#14–4	20	50	**BQC220250**
20	15	20	**BQC2152120**	#14–4	25	25	**BQC225225**
20	20	20	**BQC2202120**	#14–4	25	30	**BQC225230**
20	25	20	**BQC2252120**	#14–4	30	15	**BQC230215**
20	30	20	**BQC2302120**	#14–4	30	30	**BQC230230**
20	40	20	**BQC2402120**	#14–4	30	40	**BQC230240**
20	50	20	**BQC2502120**	#14–4	30	50	**BQC230250**
30	50	20	**BQC2502030**	#14–4	40	30	**BQC240230**
—	—	—	—	#14–4	40	40	**BQC240240**
—	—	—	—	#14–4	40	50	**BQC240250**
—	—	—	—	#14–4	50	20	**BQC250220**
—	—	—	—	#14–4	50	50	**BQC250250**

Notes

① All Type BQC quadplex circuit breakers carry listing for HACR applications.
② All 15 and 20 ampere single poles are switch-duty rated.

1

Plug-On Circuit Breakers, Types BJ and BJH—10/22 kAIC, 120/240 Vac and 240 Vac

For Use in Single-Phase and Three-Phase Loadcenters—150 Amperes and Above

Type BJ

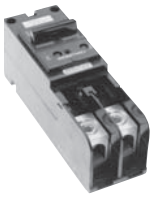

Types BJ and BJH Breakers, 1-Inch (25.4 mm) per Pole, 120/240 or 240 Vac, 10, 22 kAIC

	Two-Pole 120/240 Vac Common Trip Requires Four 1-Inch (25.4 mm) Spaces ① 10 per Shelf Carton			Three-Pole 240 Vac Common Trip Requires Six 1-Inch (25.4 mm) Spaces ② 5 per Shelf Carton	
Ampere Rating	**10 kAIC Catalog Number**	**22 kAIC Catalog Number**	**Wire Size Range Cu/Al 60 °C or 75 °C**	**10 kAIC Catalog Number**	**22 kAIC Catalog Number**
125	**BJ2125**	**BJH2125**	#2–300 kcmil	**BJ3125**	**BJH3125**
150	**BJ2150**	**BJH2150**	#2–300 kcmil	**BJ3150**	**BJH3150**
175	**BJ2175**	**BJH2175**	#2–300 kcmil	**BJ3175**	**BJH3175**
200	**BJ2200**	**BJH2200**	#2–300 kcmil	**BJ3200**	**BJH3200**
225	**BJ2225**	**BJH2225**	#2–300 kcmil	**BJ3225**	**BJH3225**

Plug-On Special Application Circuit Breakers—10 kAIC, 120 Vac, 120/240 Vac and 240 Vac

BRWH215
Water Heater Breaker

BRSN220
Switching Neutral Breaker

Special Application Circuit Breakers, 1-Inch (25.4 mm) per Pole

Water Heater Breakers		Switching Neutral Breakers			240 V Breakers		Non-Automatic Molded Case Switches	
LINE / LOAD		OUT / IN / NEUTRAL						
Two-Pole 120/240 Vac Common Trip Requires Two 1-Inch (25.4 mm) Spaces With Isolated Line Terminals for Separately Metered Water Heaters 5 per Shelf Carton 10 kAIC		Two-Pole 120 Vac Common Trip Requires Two 1-Inch (25.4 mm) Spaces With Switching Neutral Pole for Gasoline Pump Applications 5 per Shelf Carton 10 kAIC			Two-Pole 240 Vac Common Trip Requires Two 1-Inch (25.4 mm) Spaces Where Voltage to Ground is 240 Vac 5 per Shelf Carton 10 kAIC		Two-Pole 240 Vac Requires Two 1-Inch (25.4 mm) Spaces For Use as Disconnect Contains No Magnetic or Thermal Trip Properties 5 per Shelf Carton 5 kAIC	
Ampere Rating	**Catalog Number**	**Ampere Rating**	**Catalog Number**	**Wire Size Range Cu/Al 60 °C or 75 °C**	**Ampere Rating**	**Catalog Number**	**Ampere Rating**	**Catalog Number**
15	**BRWH215**	15	**BRSN215**	#14–4	10	**BR210H**	—	—
20	**BRWH220**	20	**BRSN220**	#14–4	15	**BR215H**	—	—
30	**BRWH230**	25	**BRSN225**	#14–4	20	**BR220H**	—	—
—	—	30	**BRSN230**	#14–4	25	**BR225H**	—	—
—	—	—	—	#14–4	30	**BR230H**	—	—
—	—	—	—	#14–4	35	**BR235H**	—	—
—	—	—	—	#14–4	40	**BR240H**	—	—
—	—	—	—	#14–4	45	**BR245H**	—	—
—	—	—	—	#14–4	50	**BR250H**	50	**BR250NA**
—	—	—	—	#14–4	55	**BR255H**	—	—
—	—	—	—	#4–1/0	60	**BR260H**	60	**BR260NA**
—	—	—	—	#4–1/0	70	**BR270H**	—	—
—	—	—	—	#4–1/0	80	**BR280H**	—	—
—	—	—	—	#4–1/0	90	**BR290H**	—	—
—	—	—	—	#4–1/0	100	**BR2100H**	100	**BR2100NA**

Notes

① Breaker uses two 1-inch (25.4 mm) pole spaces on left side and two 1-inch (25.4 mm) pole spaces on right side of loadcenter.

② Breaker uses three 1-inch (25.4 mm) pole spaces on left side and three 1-inch (25.4 mm) pole spaces on right side of loadcenter.

If BJ or BJH breakers are used as a main or a back feed device, a hold-down kit is required. See **Page V1-T1-85**.

Circuit Breaker Accessories

THS1

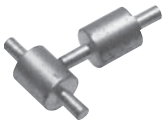

BHLW2

BRQLW

MCBPL (Installed)

BHLW

BRLW2

BREQS125

BRHDK125

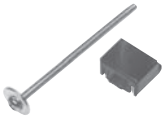

Field Installation Kits and Parts

Description	Ordering Quantity ①	Catalog Number
Handle Ties ②		
Handle tie bar for physically joining the handles of two adjacent single-pole Type BR circuit breakers (metal cylinder pin type)	10	**BHT**
Handle tie bar for joining two independent outside poles of Types BQ and BQC Quadplex and outside poles of two Type BD duplex circuit breakers	10	**THOW**
Handle tie bar for joining two adjacent outside poles of Types BQ and BQC Quadplex and outside poles of two Type BD duplex circuit breakers	10	**THS1**
Handle Lockoffs ③④		
Padlockable device for locking the handle of single-, two- or three-pole Type BR Circuit Breakers and single-pole of a Type BD Duplex or one independent outside pole of a Type BQ or BQC Quadplex circuit breakers (escutcheon mounted) ⑤	10	**BRLW**
Padlockable device for locking the handle of a single-pole Type BR circuit breaker (handle mounted) ⑥	10	**BRLW1**
Padlockable device for locking the handle of a two- and three-pole Type BR circuit breaker (handle mounted) ⑥	10	**BRLW2**
Padlockable device for locking the handle of a single-pole Type BD Duplex, BQ or BQC Quadplex breaker (handle mounted) ⑥	10	**BRDL1**
Padlockable device for locking the handle of the two center poles and the two outer poles of a two-pole Types BQ and BQC quadplex circuit breakers (escutcheon mounted) ⑤	10	**BRQLW**
Padlockable device for locking the handle of main circuit breaker Types CC and CHH into the ON or OFF position (screw mounted) ⑦	1	**CCPL**
Padlockable device for locking the handle of main breaker Types BW and CSR into the ON or OFF position (escutcheon mounted) ⑤	1	**MCBPL**
Device used to secure handle in ON or OFF position for single-, two- or three-pole Type BR circuit breakers and single-pole of Type BD duplex and one independent outside pole of Type BQ or BQC Quadplex circuit breakers (escutcheon mounted) ⑤	10	**BHLW**
Device used to secure handle in ON or OFF position for single-pole Type BR circuit breakers (handle mounted) ⑥	10	**BHLW1**
Device used to secure handle in ON or OFF position for two- and three-pole Type BR circuit breakers (handle mounted) ⑥	10	**BHLW2**
Device used to secure handle in ON or OFF position for single-pole Type GFCB ground fault circuit breakers (handle mounted) ⑥	10	**BHGW**
Device used to secure handle in ON or OFF position for one independent outside pole of Types BQ and BQC Quadplex or single-pole Type BD duplex circuit breakers (handle mounted) ⑥	10	**HLW1**
Hold-Down Kits ⑧		
Hold-down retainer kit for three-pole Type BR circuit breakers in S3100 and 3100R loadcenters only	1	**BRHDB**
Hold-down screw kit for two- and three-pole Type BR circuit breakers in single-phase MLO loadcenters through 100–125 A	1	**BREQS125**
Hold-down screw kit for two- and three-pole Type BR circuit breakers in MLO loadcenters 150–225 A	1	**BRHDK125**
Hold-down screw kit for two-pole Types BJ and BJH circuit breakers in MLO loadcenters 125–225 A	1	**BJHDS**
Hold-down screw kit for three-pole Types BJ and BJH circuit breakers in MLO loadcenters 125–225 A	1	**BJHDS3P**
Main Breaker Lug Kits		
Types CC and CHH main breaker lug kit (2) 300 kcmil	1	**CCL300**
Types BW/CSR main breaker lug kit (2) 300 kcmil	1	**MCBL300**

Notes

① Must be purchased in multiples of ordering quantities indicated.
② Handle ties: typically used to join two similar independent single-pole breakers to form a two-pole noncommon trip breaker.
③ Handle lockoffs: devices that use a padlock to lock the circuit breaker's handle in the ON or OFF position.
④ See table on **Page V1-T1-86** for handle position changeability chart.
⑤ Escutcheon mounted: device mounted semipermanently to the face of the circuit breaker and secured by the loadcenter deadfront.
⑥ Handle mounted: device mounted directly to the handle by the use of a set screw.
⑦ Screw mounted: device permanently mounted to the face of the circuit breaker by the use of a non-removable screw.
⑧ Hold-down kits: devices used to secure the circuit breaker to the loadcenter for back-feed main application. See NEC Article 384.16(g). Add "B" suffix to two-pole breaker for tapped hole for hold-down kit (ex. BR230B) for BR breakers below 60 A.

BRML

Field Installation Kits and Parts, continued

Description	Ordering Quantity ①	Catalog Number
Mechanical Interlocks		
Types BR for two-, three- and four-pole breakers	10	**BRML**
Padlock Brackets		
BR padlock mounting bracket	10	**BRPLOFF**
BR three-pole lock-off bracket	10	**BRPLOFF3P**
BJ two-pole lock-off bracket	10	**BJL2P**
BJ three-pole lock-off bracket	10	**BJL3P**

Shunt Trips, Auxiliary and Alarm Contacts

Description	Catalog Number ② Suffix Adder
Shunt Trip for Types BW/CSR	
12 Volts	**SR12**
24 Volts	**SR24**
120 Volts	**SR01**
Shunt Trip for Types BR	
120 Volts	**ST**
Auxiliary Contact for Types BW/CSR	
1NO and 1NC	**AL1**
2NO and 2NC	**AL2**
Alarm Contacts for Types BW/CSR	
Types BW/CSR	**CR1**
Alarm Contacts for Type GFCB (Single-Pole)	
Alarm contact for GFCB (single-pole)	**W1**
1NO and 1NC	**W2**

Handle Position Changeability Chart

	To Change Handle Position from ON to OFF, or OFF to ON You Must...		
Handle Lockoff and Lockdog Types	**Remove Padlock**	**Remove Device**	**Remove Loadcenter Deadfront**
Lockoff escutcheon mounted	Remove	—	—
Lockoff handle mounted	Remove	Remove	—
Lockoff screw mounted	Remove	—	—
Lockdog escutcheon mounted	N/A	Remove	Remove
Lockdog handle mounted	N/A	Remove	—

Notes

① Must be purchased in multiples of ordering quantities indicated.

② Add suffix indicated to end of breaker catalog number.

Wiring Diagrams

Single-Pole 120 V Load Application Sourced by 120/240 Vac

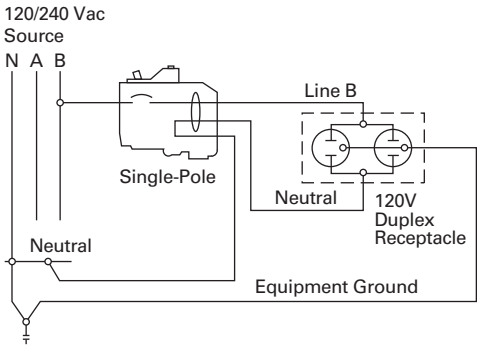

Two-Pole Shared Neutral with Duplex Receptacle Application

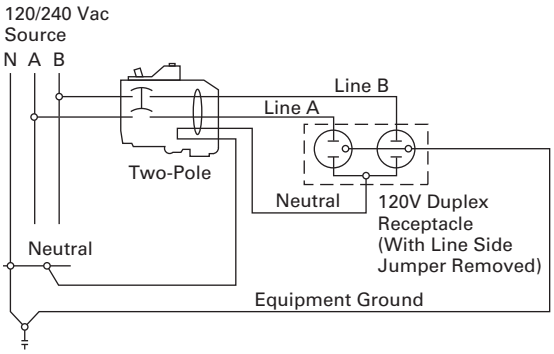

Two-Pole Shared Neutral with Multi-Duplex Receptacle Application

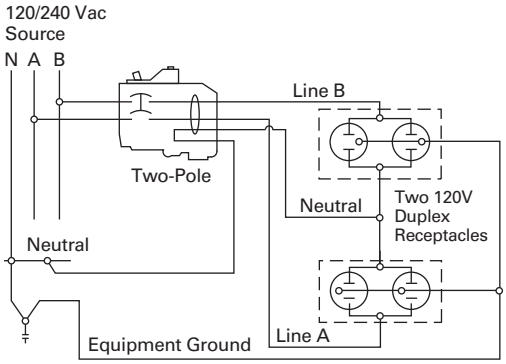

Single-Pole 120 V Load Application Sourced by 120/240 Vac

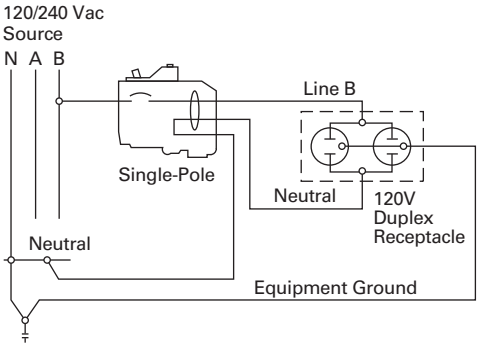

Two-Pole 240 V Load Application Sourced by 120/240 Vac

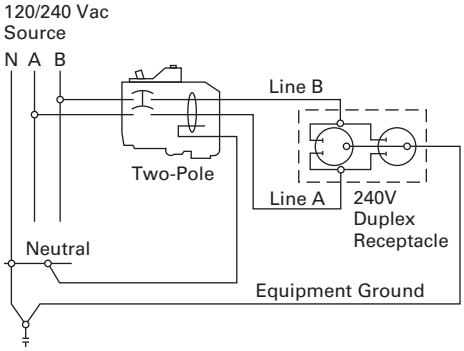

Single-Pole 120 V Duplex Receptacle Application

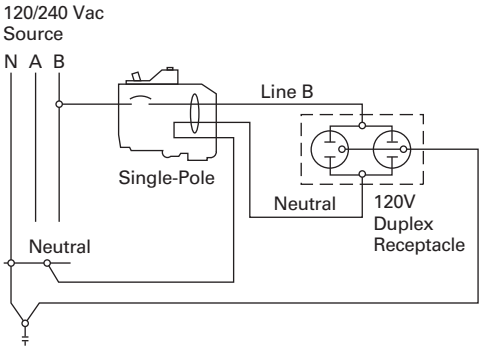

Two-Pole 120 V Multi-Duplex Receptacle Application

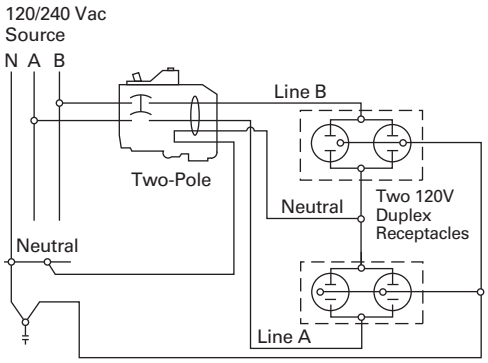

Two-Pole 120 V Duplex Receptacle Application

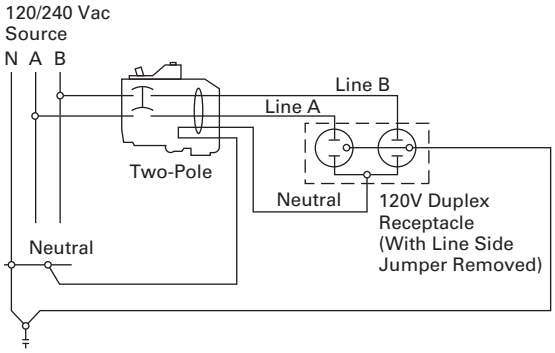

Two-Pole 240 V Duplex Receptacle Application

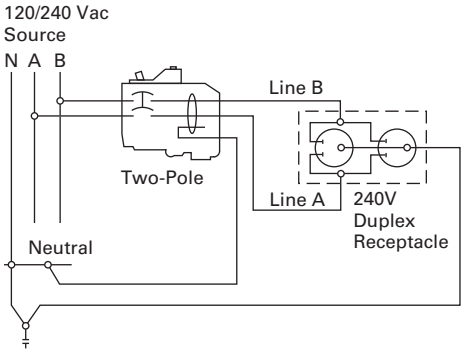

OEM Loadcenters

Contents

Description	*Page*
Standards and Certifications	**V1-T1-90**
Product Selection	**V1-T1-90**

Product Description

As a leader in the electrical distribution equipment business, Eaton has a unique product offering for equipment manufacturers, panel builders and virtually any OEM that has a need for power distribution within their equipment. The OEM interior offering consists of a wide variety of power distribution options utilizing components from Eaton's CH and BR loadcenter product lines. With high-volume, standardized products, OEMs can expect to receive high-quality products covering configurations meeting virtually any power distribution need.

Coupled with Eaton's expertise in circuit breaker design and manufacturing, OEM interiors provide solid power distribution and circuit protection in a compact, easy-to-install package. Interiors are offered from 2 to 42 circuits and from 70 to 225 A.

Quality

Built in ISO 9002 certified manufacturing facilities, customers can be assured of the process quality in place for the manufacture of these products. Utilizing the latest in computer-controlled plating, painting, molding, stamping and welding processes, Eaton's customers have come to expect consistent high-quality from shipment to shipment.

Two Products Offer Design Flexibility

As a manufacturer of two lines of loadcenters, Eaton is in a unique position to offer the broadest range of interiors in the market. Each line has its own unique characteristics that appeal to various segments of the market. OEM interiors are UL recognized components and are listed in either of the following UL files: E8741 or E52977.

The CH interiors feature 100% copper bus and use the CH 3/4-inch (19.1 mm) wide circuit breaker, which minimizes panel space. Recognized by contractors for its sturdy design, the CH interior will appeal to those customers seeking an industrial quality bolted busbar and the space saving of 3/4-inch (19.1 mm) per bus stab. With a typical 12 circuit CH interior, this space savings amounts to an inch and a half savings over its 1-inch (25.4 mm) counterparts. The stab rating of the CH interiors is 140 A maximum meaning that the handle rating of breakers mounted across from one another may not exceed 140 A.

The BR interiors are manufactured of formed, plated aluminum or copper, and use Eaton's Type BR 1-inch (25.4 mm) wide circuit breaker. This design affords customers the most circuit flexibility as many of these interiors allow the installation of standard single- and two-pole breakers as well as duplex (two poles in a 1-inch (25.4 mm) space) or quadplex (four poles in a 2-inch (50.8 mm) space) breakers.

The stab rating of the BR interiors is 200 A maximum, meaning that the handle rating of the breakers that are mounted across from one another may not exceed 200 A.

The interiors are designed for either horizontal (single-row breaker mounting), or vertical (double-row breaker mounting). To comply with National Electrical Code (NEC) requirements, if mounted horizontally, when the breaker is ON, the handle should be in the UP position. When mounted vertically, the handle toggles from left to right, so this is not a concern.

Standards and Certifications

Class CTL

National Electrical Code Paragraph 384.15 requires branch circuit panelboards to be provided with physical means to prevent the installation of more overcurrent devices than that number of which the enclosure was designed, rated and approved. Class CTL Duplex, Quadplex and twin breakers (identified by a catalog number prefix BD, BQ, BQC and CHT) are equipped with a UL listed rejection tab over the line terminal. All OEM interiors have appropriately notched stabs to accept these rejection tab Class CTL breakers.

Duplex, Quadplex and twin breakers manufactured without the rejection tab (identified by a catalog number prefix BR, BRD and CHT) are available for replacement purposes in older interiors.

Federal Specifications

All loadcenter enclosures meet Federal Specifications W-P-115b, Type 1, Class 2 requirements.

All 120/240 V breakers, both 1-inch (25.4 mm), 1/2-inch (12.7 mm) and 3/4-inch (19.1 mm) per pole meet the requirement of Federal Specifications W-C 375B/Gen Type 1.

Canadian Standards Association Listing

All single-pole and two-pole, 120/240 V breakers, both 1-inch (25.4 mm), 1/2-inch (12.7 mm) and 3/4-inch (19.1 mm) per pole, 225 A maximum, are listed as Certified by the Canadian Standards Association, Guide No. 69-11.19, Class 1432, File 18328.

Underwriters Laboratories Listing

All grounding bars manufactured comply with Underwriters Laboratories standards and are listed under Guide No. DHJR, File E31424, Volume W, Section 17.

All circuit breakers 10 A and larger comply with the Underwriters Laboratories "Standard for Branch Circuit and Service Circuit-Breakers" UL 489; Guide No. 60 10.2 File E31424, and "Requirements for Wire Connectors and Soldering Lugs," UL 486B, Guide No. 461 10-C File E7830.

All Eaton breakers where marked, are suitable for use with 60/75 °C rated wire, unless otherwise specified.

All devices comply with the 22 kAIC–10 kAIC UL series connected components File DKSY2 of the Recognized Components Index.

Lighting and Appliance Panelboards

Lighting and appliance branch circuit panelboards are defined in NEC (Article 384) as "One having more than 10 percent of its overcurrent devices rated 30 A or less for which neutral connections are provided." Article 384 also limits the number of overcurrent devices (branch circuit poles) to a maximum of 42 in any one cabinet. When the 42 poles are exceeded, two or more separate panels are required.

For more details and engineering drawings, see BR.31.02.S.E.

Listed

Product Selection

Type CH Loadcenter Interior Assemblies—Copper Bus

Ampere Rating	Maximum Number 1-Inch (24.5 mm) Spaces	Single Poles	UL File Reference	Main Terminal Size (Per Phase)	Standard Package Quantity	Catalog Number
Single-Phase Single Row Breaker Mounting—120/240 Vac, Three-Wire						
70	2	2	E8741	(1) #8–#2 AWG Cu/Al	1	**CH9MB270**
125	2	2	E8741	(1) 2/0–#6 AWG Cu/Al	20	**CH2L125INT**
Single-Phase Double Row Breaker Mounting—120/240 Vac, Three-Wire						
125	4	4	E8741	(1) 2/0–#14 AWG Cu/Al	20	**CH4L125INT**
125	8	8	E8741	(1) 2/0–#6 AWG Cu/Al	20	**CH8L125INT**
125	12	12	E8741	(1) 2/0–#6 AWG Cu/Al	20	**CH12L125INT**
125	16	16	E8741	(1) 2/0–#6 AWG Cu/Al	20	**CH16L125INT**
200	12	12	E8741	(1) 300 kcmil–#4 AWG Cu/Al	20	**CH12L200INT**
200	16	16	E8741	(1) 300 kcmil–#4 AWG Cu/Al	10	**CH16L200INT**
225	24	24	E8741	(1) 300 kcmil–#4 AWG Cu/Al	10	**CH24L225INT**
225	32	32	E8741	(1) 300 kcmil–#4 AWG Cu/Al	10	**CH32L225INT**
225	42	42	E8741	(1) 300 kcmil–#4 AWG Cu/Al	10	**CH42L225INT**
Three-Phase Double Row Breaker Mounting—208Y/120 Vac, Four-Wire—240 Vac, Three-Wire—120/240 Vac, Four-Wire Delta						
125	12	12	E8741	(1) 2/0–#6 AWG Cu/Al	10	**CH12L3125INT**
125	18	18	E8741	(1) 2/0–#6 AWG Cu/Al	10	**CH18L3125INT**
125	24	24	E8741	(1) 2/0–#6 AWG Cu/Al	10	**CH24L3125INT**
225	24	24	E8741	(1) 300 kcmil–#4 AWG Cu/Al	10	**CH24L3225INT**
225	30	30	E8741	(1) 300 kcmil–#4 AWG Cu/Al	10	**CH30L3225INT**
225	42	42	E8741	(1) 300 kcmil–#4 AWG Cu/Al	10	**CH42L3225INT**

BR Loadcenter Interior Assembly

Type BR Loadcenter Interior Assemblies—Aluminum Bus

Ampere Rating	Maximum Number 1-Inch (24.5 mm) Spaces	Single Poles	UL File Reference	Main Terminal Size (Per Phase)	Standard Package Quantity	Catalog Number
Single-Phase Single Row Breaker Mounting—120/240 Vac, Three-Wire						
70	2	4	E8741	(1) #8–#2 AWG Cu/Al	20	**24INT70B**
125	2	4	E8741	(1) 1/0–#14 AWG Cu 2/0–12 AWG Al	20	**24INT125B**
125	6	12	E52977	(1) 2/0–#14 AWG Cu/Al	20	**612INT125SRB**
Single-Phase Double Row Breaker Mounting—120/240 Vac, Three-Wire						
125	4	8	E8741	(1) 2/0–#14 AWG Cu/Al	20	**48INT125B**
125	6	12	E8741	(1) 2/0–#14 AWG Cu/Al	20	**612INT125B**
125	8	16	E8741	(1) 2/0–#14 AWG Cu/Al	20	**816INT125B**
125	12	12	E52977	(1) 2/0–#14 AWG Cu/Al	20	**1212INT125B**
125	12	24	E52977	(1) 2/0–#14 AWG Cu/Al	20	**1224INT125B**
125	16	24	E52977	(1) 2/0–#14 AWG Cu/Al	20	**1624INT125B**
125	20	24	E52977	(1) 2/0–#14 AWG Cu/Al	10	**2024INT125B**
125	24	24	E52977	(1) 2/0–#14 AWG Cu/Al	10	**2424INT125B**
200	8	16	E52977	(1) 300 kcmil–#1 AWG Cu/Al	20	**816INT200B**
200	12	24	E52977	(1) 300 kcmil–#1 AWG Cu/Al	20	**1224INT200B**
200	30	40	E52977	(1) 300 kcmil–#1 AWG Cu/Al	10	**3040INT200B**
225	42	42	E52977	(1) 300 kcmil–#1 AWG Cu/Al	10	**4242INT225B**
Three-Phase Double Row Breaker Mounting—208Y/120 Vac, Four-Wire—240 Vac, Three-Wire—120/240 Vac, Four-Wire Delta						
125	12	24	E52977	(1) 2/0–#8 AWG Cu/Al	10	**1224INT3125B**
150	18	36	E52977	(1) 300 kcmil–#2 AWG Cu/Al	10	**1836INT3150B**
150	24	42	E52977	(1) 300 kcmil–#2 AWG Cu/Al	10	**2442INT3150B**
200	30	42	E52977	(1) 300 kcmil–#2 AWG Cu/Al	10	**3042INT3200B**
225	42	42	E52977	(1) 300 kcmil–#2 AWG Cu/Al	10	**4242INT3225B**

Type BR Loadcenter Interior Assemblies—Copper Bus

Ampere Rating	Maximum Number 1-Inch (24.5 mm) Spaces	Single Poles	UL File Reference	Main Terminal Size (Per Phase)	Standard Package Quantity	Catalog Number
Single-Phase Double Row Breaker Mounting—120/240 Vac, Three-Wire						
125	8	16	E5297	(1) 2/0–#14 AWG Cu/Al	20	**816INT125BC**
125	12	12	E5297	(1) 2/0–#14 AWG Cu/Al	20	**1212INT125BC**
200	12	24	E5297	(1) 300 kcmil–#1 AWG Cu/Al	20	**1224INT200BC**
Three-Phase Double Row Breaker Mounting—208Y/120 Vac, Four-Wire—240 Vac, Three-Wire—120/240 Vac, Four-Wire Delta						
125	12	24	E52977	(1) 2/0–#8 AWG Cu/Al	10	**1224INT3125BC**
200	12	24	E52977	(1) 300 kcmil–#2 AWG Cu/Al	10	**1224INT3200BC**

Neutral Assemblies

Ampere Rating	UL File Rating	Main Incoming Terminal Wire Size Range 60 °C or 75 °C	Number of Terminals #14–4 AWG Cu/Al	Number of Terminals #6–1/0 AWG Cu #6–2/0 AWG Al	Standard Package Quantity	Figure	Dimensions–Inches (mm) Overall Length A	Dimensions–Inches (mm) Mounting B	Catalog Number
125	E52977	#6–1/0 AWG Cu #6–2/0 AWG Al	10	—	20	1	5.938 (150.83)	5.400 (137.16)	**10NEU125B**
125	E52977	#6–1/0 AWG Cu #6–2/0 AWG Al	17	—	20	1	8.388 (213.06)	7.850 (199.40)	**17NEU125B**
125	E52977	#6–1/0 AWG Cu #6–2/0 AWG Al	20	—	20	1	9.438 (239.73)	8.900 (226.06)	**20NEU125B**
225	E52977	#1–300 kcmil Cu/Al	24	1	20	2	10.913 (277.19)	10.300 (261.62)	**24NEU225B**
225	E52977	#1–300 kcmil Cu/Al	35	1	20	2	15.813 (401.65)	15.200 (386.08)	**35NEU225B**
125	—	—	4	2	1	3	2.266 (57.56)	0.594 (15.09)	**BINA**

Figure 1

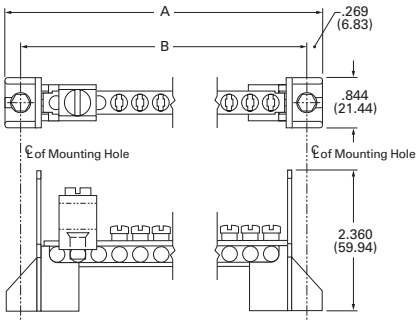

Figure 2

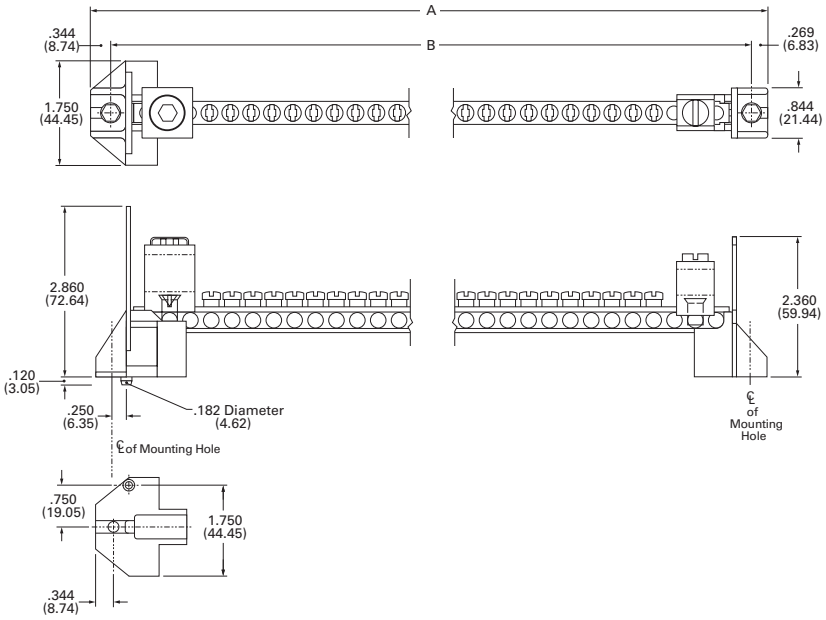

Figure 3

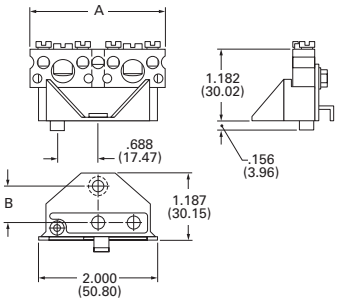

Add-on Lugs for Neutral Assemblies

Description	Wire Size Range Cu/Al 60 °C or 75 °C	Ordering Quantity ①	Catalog Number
Neutral/ground lug Add-on neutral or ground lug	#2/0 maximum	1	**NL20**
	#3/0 maximum	1	**NL30**
	300 kcmil maximum	1	**NL300**

GBK14

BRGBK39512

Ground Bar Kits

Description (See Legend)	Length Inches (mm)	Ordering Quantity ①	Catalog Number
●○○○○●○	2.54 (64.5)	1	**GBK5** ②
●○○○○●○■	3.59 (91.2)	1	**GBK520** ②
●○○○○●○○○○○○	4.29 (109.0)	1	**GBK10** ②
●○○○○●○○○○○○■	5.34 (135.6)	1	**GBK1020** ②
◒●◒◒◒⬓◒●◒⬓◒◒◒	4.61 (117.1)	1	**GBK13** ②
●○○○○●○○○○○○○○○	5.69 (144.5)	1	**GBK14** ②
●○○○○●○○○○○○○○○■	6.74 (171.2)	1	**GBK1420** ②
●○○○○●○○○○○○○○○○○○○○○	8.14 (206.8)	1	**GBK21** ②
●○○○○●○○○○○○○○○○○○○○○○■	9.19 (233.4)	1	**GBK2120** ②
◒⬓◒●◒⬓◒◒◒⬓◒●◒⬓◒◒◒⬓◒	5.78 (146.8)	1	**BRGBK39512** ③④

Ground Bar Legend

○ (3) #14–10 Cu/Al or (1) #14–4 Cu/Al
■ (1) #6–2/0 Cu/Al
⬓ (1) #14–1/0 Cu/Al or (3) #14–10 Cu/Al
◒ (1) #14–6 Cu/Al or (2) #14–12 Cu/Al
● Mounting Hole

Notes

① Must be purchased in multiples of ordering quantities indicated.
② Distance between mounting holes is 1.75 inches (44.5 mm).
③ For single- and three-phase 400 and 600 A applications.
④ Distance between mounting holes is 2.34 inches (59.5 mm).

Enclosed Breakers

Contents

Description	*Page*
Product Selection	**V1-T1-95**
Dimensions	**V1-T1-95**

Product Overview

Eaton enclosed breakers offer all the advantages of circuit breakers packed in an enclosure for 240 Vac applications and include a wide range of accessories.

Product Description

- 100–225 A, 240 Vac maximum
- NEMA 1 general purpose—surface or flush mounting
- NEMA 3R rainproof surface mounting

Standards and Certifications

- UL 489
- CSA 22.2
- NEMA 250

Listed

Product Selection

Single-Phase and Three-Phase Circuit Breaker Enclosures—10/25 kAIC

ECC225R

Type ECC Circuit Breaker Enclosure—Order Type CC Circuit Breaker Separately

Main Ampere Rating	Unit Enclosure Type	Mounting Type	Circuit Breaker Type	Wire Size Range Cu/Al 60 °C or 75 °C	Catalog Number
Single- and Three-Phase—240 Vac Maximum					
100	Indoor	Surface	CCVH factory installed (25 kAIC)	#4–4/0	**ECCVH100S** ①②③
150	Indoor	Surface	CCVH factory installed (25 kAIC)	#4–4/0	**ECCVH150S** ①②③
200	Indoor	Surface	CCVH factory installed (25 kAIC)	#2/0–300 kcmil	**ECCVH200S** ①②③
100	Outdoor	—	CCVH factory installed (25 kAIC)	#4–4/0	**ECCVH100R** ①②④
150	Outdoor	—	CCVH factory installed (25 kAIC)	#4–4/0	**ECCVH150R** ①②④
200	Outdoor	—	CCVH factory installed (25 kAIC)	#2/0–300 kcmil	**ECCVH200R** ①②④
225	Indoor	Flush	CC/CCV/CCH	⑥	**ECC225F** ②③⑤
225	Indoor	Surface	CC/CCV/CCH	⑥	**ECC225S** ②③⑤
225	Outdoor	—	CC/CCV/CCH	⑥	**ECC225R** ②③④⑤

CCV2200

Circuit Breaker 240 Vac for Use in Type ECC Enclosures

Ampere Rating	Wire Size Range Cu/Al 60 °C or 75 °C for Line Terminals	Type CCV and CC 10 kAIC Catalog Number	Type CCVH/CCH 25 kAIC Catalog Number
Two-Pole			
60	#4–4/0	**CCV2060**	**CCVH2060**
70		**CCV2070**	**CCVH2070**
80		**CCV2080**	**CCVH2080**
90		**CCV2090**	**CCVH2090**
100		**CCV2100**	**CCVH2100**
125		**CCV2125**	**CCVH2125**
150		**CCV2150**	**CCVH2150**
175	#2/0–300 kcmil	**CCV2175**	**CCVH2175**
200		**CCV2200**	**CCVH2200**
225		**CCV2225**	**CCVH2225**
Three-Pole			
100	#4–4/0	**CC3100**	**CCH3100**
125		**CC3125**	**CCH3125**
150		**CC3150**	**CCH3150**
175	#2/0–300 kcmil	**CC3175**	**CCH3175**
200		**CC3200**	**CCH3200**
225		**CC3225**	**CCH3225**

Shunt Trips and Auxiliary Contacts

Description Type	Volts	Catalog Number Suffix Adder ⑦
Shunt Trip		
CC	12 DC	**SR12**
CC	24 DC	**SR24**
CC	120 AC	**SR01**
CC	208 AC	**SR08**
CC	240 AC	**SR02**
CCV	48–127 AC/48–60 DC	**SR01**
CCV	9–24 AC/12–24 DC	**SR02**
CCV	208–380 AC/100–127 DC	**SR04**
Auxiliary Contact		
CC 1NO and 1NC	—	**AL1**

Dimensions

Approximate Dimensions in Inches (mm)

ECC Unit Enclosures—NEMA Type 1 Indoor

Height	Width	Depth
23.25 (590.6)	8.88 (225.4)	4.50 (114.3)

ECC Unit Enclosures—NEMA Type 3R Outdoor

Height	Width	Depth
23.68 (601.7)	9.31 (236.5)	5.44 (138.1)

Notes

① Factory installed CCVH breaker.
② Approved for service entrance.
③ One ground lug accepting (1) #14–#2 is factory installed. Also, there are pre-drilled holes to accept a GBK5 ground bar.
④ Rainproof panels are furnished with hub closures plates. For rainproof hubs, refer to **Page V1-T1-66**.
⑤ Order circuit breaker separately.
⑥ Wire size is determined by the circuit breaker installed in enclosure.
⑦ Add suffix indicated to end of breaker catalog number.

Classified Breakers

Contents

Description	*Page*
Product Selection	**V1-T1-97**
Accessories	**V1-T1-99**
Technical Data	**V1-T1-99**
Wiring Diagrams	**V1-T1-100**

Product Description

Eaton UL classified Replacement Circuit Breakers are available in both 3/4-inch Type CHQ and 1-inch Type CL, single- and two-pole configurations. These breakers are classified as direct replacements by Underwriters Laboratories. In addition to a UL listing, they also come with a 15-year warranty.

Specified vs. UL Classified

Specified breakers are listed by the manufacturer of the panelboard for use in a particular panel. This doesn't mean that the panelboard manufacturer produced the specified breaker; it merely means that the panelboard manufacturer has tested the breaker in the panel. In fact, through the years, Eaton has manufactured thousands of breakers for other panelboard manufacturers.

UL classified breakers are produced by one manufacturer for use in place of the breakers specified on the panelboard. Like specified breakers, UL classified breakers have been tested in the panels for which they are approved.

Testing

Classified breakers are tested extensively in numerous General Electric®, Siemens®, Murray®, Thomas & Betts®, Square D®, and Crouse-Hinds® panels. The tests are conducted with witnesses from Underwriters Laboratories Inc. and involve short-circuit, temperature, and insertion/withdrawal applications. This level of testing ensures that the breakers meet identified standards and have been found suitable by UL for the specified purpose.

Understanding Classified Breaker Terminology

Definitions

Specified circuit breaker—each manufacturer lists the brands of circuit breakers that can be used in their panelboards. Often, manufacturers will not list competitors as specified, even though they are suitable replacements.

Classified circuit breaker—a breaker that is considered suitable, by a qualified third-party organization, for use in another manufacturer's panelboard.

Listed breaker—the listing of a circuit breaker is by an independent third party. Eaton classified breakers are listed by UL.

Labeled breaker—a breaker with a label affixed by an independent third party.

Product Selection

Type CHQ Replacement Breakers for Square D Type QO Loadcenters

10 kAIC, 120 and 120/240 Vac

CHQ120 CHQ230

Type CHQ Classified Breakers 3/4-Inch (19.1 mm) per Pole 120 or 120/240 Vac, 10 kAIC

Ampere Rating	Wire Size Range Cu/Al 60 °C or 75 °C	Single-Pole 120/240 Vac Requires One 3/4-Inch (19.1 mm) Space 10 per Shelf Carton Catalog Number	Two-Pole 120/240 Vac Common Trip Requires Two 3/4-Inch (19.1 mm) Spaces 5 per Shelf Carton Catalog Number
15	(1) #14–8 (2) #14–10	CHQ115	CHQ215
20		CHQ120	CHQ220
25		CHQ125	CHQ225
30		CHQ130	CHQ230
35		CHQ135	CHQ235
40		CHQ140	CHQ240
45		CHQ145	CHQ245
50		CHQ150	CHQ250
60		—	CHQ260

Type CHQ Ground Fault and Arc Fault Replacement Breakers for Square D Type QO Loadcenters

10 kAIC, 120 and 120/240 Vac

CHQ115GF CHQ220GF

Type CHQ Ground Fault Breakers—5 Milliampere—3/4-Inch (19.1 mm) per Pole, 10 kAIC

Ampere Rating	Wire Size Range Cu/Al 60 °C or 75 °C	Single-Pole 120 Vac Requires One 3/4-Inch (19.1 mm) Space 10 per Shelf Carton Catalog Number	Two-Pole 120/240 Vac Common Trip Requires Two 3/4-Inch (19.1 mm) Spaces 5 per Shelf Carton Catalog Number
15	(1) #14–8 (2) #14–10	CHQ115GF	CHQ215GF
20		CHQ120GF	CHQ220GF
25		CHQ125GF	CHQ225GF
30		CHQ130GF	CHQ230GF
35		—	CHQ235GF
40		—	CHQ240GF
45		—	CHQ245GF
50		—	CHQ250GF

Type CHQ Surge Arrester

Catalog Number
CHQSA

1

Type CL Replacement Breakers for Square D HOMELINE, General Electric, Crouse-Hinds, Thomas & Betts, Murray and ITE®/Siemens Loadcenters

CL_

Type CL Breakers, 1-Inch (25.4 mm) per Pole, 10 kAIC

Ampere Rating	Wire Size Range Cu/Al 60 °C or 75 °C	Single-Pole 120/240 V Requires One 1-Inch (25.4 mm) Space 10 per Shelf Carton Catalog Number	Two-Pole 120/240 V Common Trip Requires Two 1-Inch (25.4 mm) Spaces 5 per Shelf Carton Catalog Number
15	#14–4	**CL115**	**CL215**
20	#14–4	**CL120**	**CL220**
25	#14–4	**CL125**	**CL225**
30	#14–4	**CL130**	**CL230**
35	#14–4	**CL135**	**CL235**
40	#14–4	**CL140**	**CL240**
45	#14–4	**CL145**	**CL245**
50	#14–4	**CL150**	**CL250**

CL_AF

Type CL Classified Arc and Ground Fault Breakers (5 Milliampere), 1-Inch (25.4 mm) per Pole, 10 kAIC

Ampere Rating	Wire Size Range Cu/Al 60 °C or 75 °C	Single-Pole 120/240 V Requires One 1-Inch (25.4 mm) Space 1 per Shelf Carton Catalog Number
Arc Fault Breakers		
15	#14–4	**CL115AF**
20	#14–4	**CL115CAF**
20	#14–4	**CL120AF**
20	#14–4	**CL120CAF**
Ground Fault Breakers		
15	#14–4	**CL115GF**
20	#14–4	**CL120GF**
30	#14–4	**CL130GF**

CLR_

Type CL Classified Latching Remote Control Smart Breakers™, 1-Inch (25.4 mm) per Pole, 10 kAIC

Ampere Rating	Wire Size Range Cu/Al 60 °C or 75 °C	Single-Pole 120 V Requires One 1-Inch (25.4 mm) Space 10 per Shelf Carton Catalog Number	Two-Pole 120/240 V Common Trip Requires Two 1-Inch (25.4 mm) Spaces 5 per Shelf Carton Catalog Number
15	(2) #14–10	**CLRP115**	**CLRP215**
20	(2) #14–10	**CLRP120**	**CLRP220**
25	(1) #8–6	**CLRP125**	**CLRP225**
30	(1) #8–6	**CLRP130**	**CLRP230**

Accessories

CHQ Breaker Accessories

Description	Catalog Number
Breaker handle lock	**CHLO**

Technical Data

Arc Fault Application Notes

An arc fault circuit interrupter is a device intended to provide protection from the effects of arc faults by recognizing characteristics unique to arcing and by functioning to de-energize the circuit when the arc fault is detected. As of January 1, 2002, the National Electrical Code (NEC) requires all branch circuits that supply 125 V, single-phase, 15 and 20 A receptacle outlets installed in dwelling unit bedrooms shall be protected by an arc fault circuit interrupter(s). This includes ceiling lighting (recessed, ceiling fans, etc.) as well as smoke detectors and all other bedroom outlets. The 2005 NEC introduced the application of the Combination Type AFCI for bedroom circuits required as of January 1, 2008. The 2008 NEC expands this application to other living areas.

Ground Fault Application Notes

Single-pole GFCBs are designed for use in two-wire, 120 Vac circuits. Drawing on **Page V1-T1-100** shows a typical wiring configuration.

Two-pole GFCBs are designed for use in three-wire, 120/240 Vac circuits, 120 Vac multiwire circuits employing common, neutral and two-wire, 240 Vac circuits obtained from a 120/240 Vac source.

Drawings on **Page V1-T1-100** illustrate typical wiring configurations for 120/240 Vac multiwire circuits.

Drawing on **Page V1-T1-100** depicts a 240 Vac, two-wire circuit. Note the "panel neutral" conductor connects to the neutral bar, even though the neutral is not included in the load circuit. This connection is necessary to supply a 120 Vac power source to the ground fault sensing circuit.

The figures are shown with a 120/240 Vac, single-phase, three-wire power source, ut are also applicable to a 120/208 Vac, three-phase, four-wire power supply. For all figures, the electrical operation of the GFCB is not affected by the equipment ground.

1

Wiring Diagrams

Single-Pole 120 V Load Application Sourced by 120/240 Vac

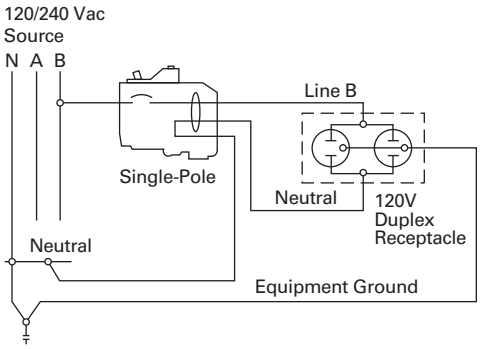

Two-Pole 240 V Load Application Sourced by 120/240 Vac

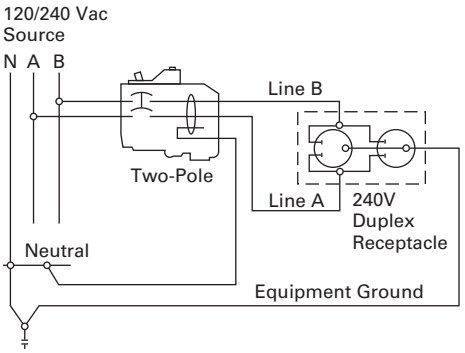

Two-Pole Shared Neutral with Multi-Duplex Receptacle Application

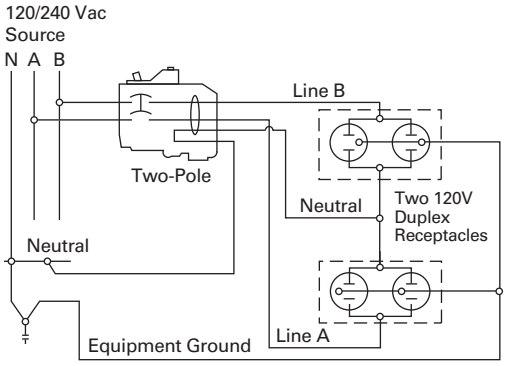

Two-Pole Shared Neutral with Duplex Receptacle Application

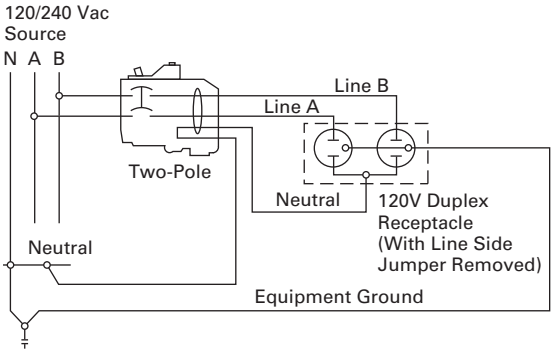

Single-Pole 120 V Duplex Receptacle Application

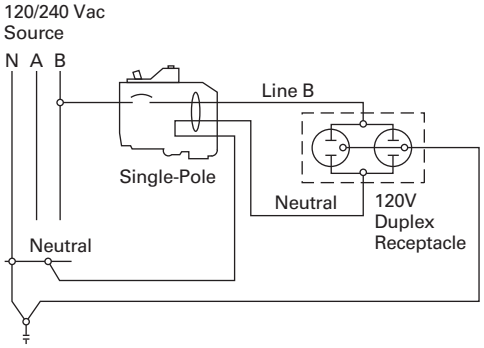

Two-Pole 120 V Duplex Receptacle Application

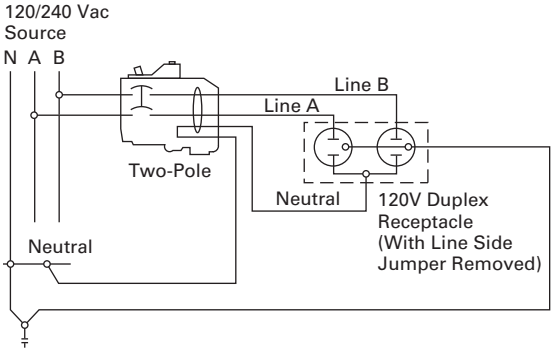

Two-Pole 120 V Multi-Duplex Receptacle Application

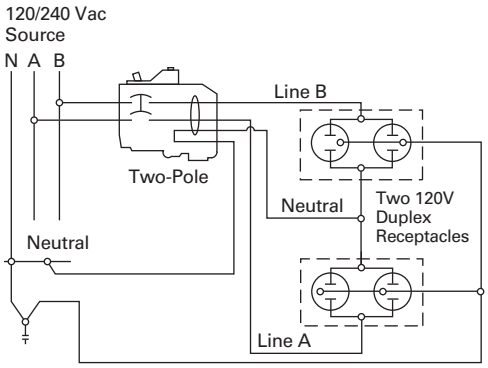

Two-Pole 240 V Duplex Receptacle Application

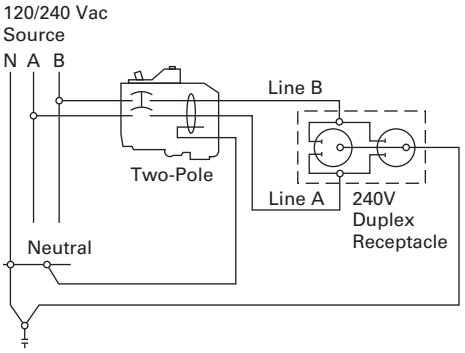

Surge Protection Devices

2.1 Surge Protection Devices and Lightning Arresters

Product Description V1-T2-2
Application Description V1-T2-2
Standards and Certifications V1-T2-3
Product Selection V1-T2-4

Learn Online

Surge Protection Devices

Contents

Description	*Page*
Surge Protection Devices and Lightning Arresters	
Standards and Certifications	**V1-T2-3**
Product Selection	**V1-T2-4**

Product Description

Due to the evolution of electronics and microprocessors in the home, there is a continuous challenge to provide quality (clean) power for electronic loads such as appliances, computers/home office and entertainment systems. Surges caused by lightning, utility grid switching and other sources travel on current carrying conductors throughout the home, which can affect and destroy sensitive electronic loads.

Eaton offers a comprehensive family of surge products for use at service entrances. These products can help protect sensitive electronics against the damaging effects of surges.

Application Description

Two-Stage Protection

Two stages of surge suppression are recommended to provide the best protection for electronic equipment. Two-stage surge suppression should be provided for all cables entering a home, including power, Internet, coaxial and telephone.

Service Entrance Surge Protection

Eaton's service entrance surge protection units provide premier surge protection for AC power at the service entrance. These products provide protection for residential electrical equipment by reducing power surges to an acceptable level for surge strips to handle at the point of use.

UL 1449 3rd Edition Type 1 and Type 2 Surge Protection

- **Type 1 Surge Protective Device (SPD)**—Permanently connected Type 1 SPDs are intended for installation between the secondary of the service transformer and the line side of the service equipment overcurrent device, as well as the load side, including watt-hour meter socket enclosures, and are intended to be installed without an external overcurrent protective device. Type 1 devices are dual-rated for Type 2 applications as well, providing the highest ratings available for installation at the service entrance
  - Eaton's CHSPT1 products provide Type 1 surge protection in accordance with UL® 1449 3rd Edition. These units can be universally mounted outside any manufacturer's primary service equipment
- **Type 2 Surge Protective Device**—Permanently connected Type 2 SPDs are intended for installation on the load side of the service equipment overcurrent device, including SPDs located at the branch panel
  - CHSPT2 products provide Type 2 surge protection in accordance with UL 1449 3rd Edition. These units can be mounted outside of any manufacturer's loadcenter or inside an Eaton Surge/Surge Ready loadcenter. Eaton also offers accessories to the CHSPT2 line for telephone and cable protection
- **Factory-Installed Surge Protection**—Eaton's loadcenters with factory-installed surge protection include a CHSPT2ULTRA and a two-pole 50 A circuit breaker. These loadcenters increase the effectiveness of surge protection due to reduced lead length. A modified deadfront allows for easy viewing of indicating lights for status indication

Surge Panel

- **Surge Ready Loadcenter**—The Surge Ready loadcenter provides a mounting provision for the CHSPT2ULTRA. This loadcenter has a modified deadfront to allow for viewing of indicating lights

Two-Stage Protection

① CHSP installed at the service entrance panel.
② SurgeTrap™ surge traps and strips located where sensitive electronics are plugged in.

Plug-On Surge Protection

- **Type CHSA**—For use on single-phase 120/240 Vac systems. The CHSA easily plugs into a single-phase Type CH loadcenter and occupies two 3/4-inch (19.1 mm) pole spaces, similar to a two-pole Type CH breaker. When installed properly, it provides surge protection for the entire loadcenter. If internal components are damaged, the CHSA LED visual indicators will signal the need for a replacement. This device is suitable for service entry locations when installed in accordance with NEC® guidelines
- **Type BRSURGE**—For use on single-phase 120/240 Vac systems. This easily plugs into a single-phase Type BR loadcenter and occupies two 1-inch (25.4 mm) pole spaces similar to a two-pole Type BR breaker. When installed properly, it provides surge protection for the entire loadcenter. If internal components are damaged, the BRSURGE LED visual indicators will signal the need for replacement. This device is suitable for service entry locations when installed in accordance with NEC guidelines. This unit is also classified by UL for use in select GE, ITE/Siemens and Crouse-Hinds Panels (refer to Pub No. 5655B65H01 for additional details)
- **Type CHQSA**—For use on single-phase, 120/240 Vac systems. This unit easily plugs into a Square D single-phase loadcenter Type QO® and occupies two 3/4-inch (19.1 mm) pole spaces similar to a two-pole Type QO breaker. When installed properly, it provides surge protection for the entire loadcenter. If internal components are damaged, the CHQSA LED visual indicators will signal the need for a replacement. This device is suitable for service entrance locations installed in accordance with NEC guidelines. This device is UL classified to be used in place of Square D Type QO surge arresters (refer to Pub-23974)
- **Type BRSURGECSA**—For use on single-phase 120/240 Vac systems. This easily plugs into a single-phase Type BR loadcenter and occupies two 1-inch (25.4 mm) pole spaces similar to a two-pole Type BR breaker. When installed properly, it provides surge protection for the entire loadcenter. If internal components are damaged, the BRSURGECSA LED visual indicators will signal the need for replacement. This device is suitable for service entry locations when installed in accordance with Canadian Electrical Code. This device is CSA® listed to be used in a Type BR loadcenter

Type 3 Point-of-Use Surge Protection

Point-of-use surge protectors such as surge receptacles are installed within 30 ft of conductor length from the service panel and are designed to offer premium surge protection for specific electronics while providing innovative features to enhance user convenience.

Standards and Certifications

- CHSPT1 Products: UL 1449 3rd Edition Type 1
- CHSPT2 Products: UL/cUL® 1449 3rd Edition Type 2
- CHSPTELE: UL 497A, cUL
- CHSPCABLE: UL 6500, cUL
- NEMA® 3R Enclosure for CHSPTELE and CHSPCABLE: UL 50 Enclosure
- BRSURGE, CHSA, BRSURGECSA, CHQSA: UL 1449 3rd Edition plug-in type; Type 2 SPD

Product Selection

SPD Type 1 CHSP Service Entrance Surge Protection—UL 1449 3rd Edition

Product Features

- Commercial grade AC power protection
- Type 1 surge device for installation before or after the main service disconnect
- Convenient mounting options—universal fit to any manufacturer's equipment
- Clear, visible LED indication displaying status of the surge protector

	Catalog Number	Connection	Enclosure	Voltage	Phase	Frequency (Hz)	MCOV ①	VPR ②	I_n ③	SCCR ④	Surge Current Capacity, Per Phase Rating ⑤
CHSPT1ULTRA	CHSPT1ULTRA	Permanently connected device installed before or after the service disconnect overcurrent device.	NEMA 4	100/200 Vac, 110/220 Vac, 120/240 Vac	Single	50/60	300 V L–L, 150 V L–N	1000 V L–L, 600 V L–N	20 kA	200 kA	50 kA
CHSPT1MAX	CHSPT1MAX	Permanently connected device installed before or after the service disconnect overcurrent device.	NEMA 4	100/200 Vac, 110/220 Vac, 120/240 Vac	Single	50/60	300 V L–L, 150 V L–N	1000 V L–L, 600 V L–N	20 kA	200 kA	45 kA
CHSPT1MICRO	CHSPT1MICRO	Permanently connected device installed before or after the service disconnect overcurrent device.	NEMA 4	100/200 Vac, 110/220 Vac, 120/240 Vac	Single	50/60	300 V L–L, 150 V L–N	1000 V L–L, 600 V L–N	20 kA	200 kA	36 kA
CHSPT1-208Y	CHSPT1-208Y	Permanently connected device installed before or after the service disconnect overcurrent device.	NEMA 4	120/208 Vac	Three-phase wye	50/60	300 V L–L, 150 V L–N	1000 V L–L, 600 V L–N	20 kA	200 kA	50 kA

Accessory for Type 1 CHSP Service Entrance Surge Protection

	Catalog Number	Description
SP1DINRAILKIT	SP1DINRAILKIT	Mounting kit for wall or DIN rail installation.

Notes

① MCOV: Maximum Continuous Operating Voltage that may be applied to the device per mode.
② VPR: Voltage Protection Rating is the measured limiting voltage after a surge event.
③ I_n: Nominal Discharge Current is the current that the device can withstand for 15 impulses.
④ SCCR: The amount of current the product can withstand under short-circuit conditions.
⑤ Surge Current Capacity: The maximum one time surge current rating per phase.

For warranty details, go to www.eaton.com/surgetrap.

SPD Type 2 CHSP Service Entrance Surge Protection—UL 1449 3rd Edition; cUL

Product Features

- AC power protection
- Universally connects to any manufacturer's loadcenter (breaker box)
- Quick connect design—easy to mount telephone and cable protection modules
- LED status indication

	Catalog Number	Connection	Enclosure	Voltage	Phase	Frequency (Hz)	MCOV ①	VPR ②	I_n ③	SCCR ④	Surge Current Capacity, Per Phase Rating ⑤
CHSPT2ULTRA	**CHSPT2ULTRA**	Can be attached to the outside of any manufacturer's loadcenter (breaker box). This product should be connected on the load side of the loadcenter main service disconnect through a dedicated circuit breaker (follow NEC Guidelines).	NEMA 4	120/240 Vac rated line voltage	Single	60	150 V L–N, 300 V L–L	600 V L–N, 1000 V L–L, 800 V N–G, 600 V L–G	20 kA ⑥	22 kA	**108 kA** (L1–N 54 kA, L1–G 54 kA, L2-N 54 kA, L2–G 54 kA)
CHSPT2MAX	**CHSPT2MAX**	Can be attached to the outside of any manufacturer's loadcenter (breaker box). This product should be connected on the load side of the loadcenter main service disconnect through a dedicated circuit breaker (follow NEC Guidelines).	NEMA 4	120/240 Vac rated line voltage	Single	60	150 V L–N, 300 V L–L	600 V L–N, 1000 V L–L, 800 V N–G, 600 V L–G	10 kA	22 kA	**72 kA** (L1–N 36 kA, L1–G 36 kA, L2–N 36 kA, L2–G 36 kA)
CHSPT2MICRO	**CHSPT2MICRO**	Can be attached to the outside of any manufacturer's loadcenter (breaker box). This product should be connected on the load side of the loadcenter main service disconnect through a dedicated circuit breaker (follow NEC Guidelines).	NEMA 4	120/240 Vac rated line voltage	Single	60	150 V L–N, 300 V L–L	600 V L–N, 1000 V L–L, 800 V N–G, 600 V L–G	5 kA	22 kA	**36 kA** (L1–N 18 kA, L1–G 18 kA, L2–N 18 kA, L2–G 18 kA)

Notes

① MCOV: Maximum Continuous Operating Voltage that may be applied to the device per mode.
② VPR: Voltage Protection Rating is the measured limiting voltage after a surge event.
③ I_n: Nominal Discharge Current is the current that the device can withstand for 15 impulses.
④ SCCR: The amount of current the product can withstand under short-circuit conditions.
⑤ Surge Current Capacity: The maximum one time surge current rating per phase.
⑥ When used with a 50 A two-pole circuit breaker, 10 kA when used with a 15 A two-pole circuit breaker.

For warranty details, go to www.eaton.com/surgetrap.

Accessories for CHSP Type 2 Service Entrance Protection

	Catalog Number	Description	Installation	Surge Current Capacity	DC Breakdown Voltage	Voltage
CHSPCABLE	**CHSPCABLE**	Quick Connect design—add additional telephone and AC protection modules; protects two quad shield cables; bi-directional	Indoor installation; or rain-tight when used with recommended enclosure	10 kA per line	145 V	
CHSPTELE	**CHSPTELE**	Quick Connect design—add additional AC and cable protection modules; protects four telephone lines	Indoor installation; or rain-tight when used with recommended enclosure	20 kA per line	230 V	Ring 90–120 Vac/ Tone 48–52 Vdc
CHSPT23PACK	**CHSPT23PACK**	3-Pack: CHSPT2ULTRA+CHSPTELE+CHSPCABLE; Surge protection for AC power, telephone and cable—see individual product features		See individual product ratings		
CHSP3RTELCABLE	**CHSP3RTELCABLE**	Raintight enclosure for CHSPTELE and CHSPCABLE; top or bottom feed; enclosure only, surge not included; accommodates up to two devices				
CHSPFMKIT	**CHSPFMKIT**	Flushmount kit for: CHSPT2ULTRA, CHSPT2MAX, CHSPT2MICRO, CHSPTELE, CHSPCABLE				
MSEGR2	**MSEGR2**	Outdoor communication grounding device; meets 2008 NEC requirements for intersystem bonding termination				

Note

For warranty details, go to www.eaton.com/surgetrap.

Type BR and CH Surge Breakers

Product Description

The CH and BR surge breaker is designed to provide premier AC power surge protection for sensitive electronics and appliances from the damaging effects of electrical surges. In addition, the surge breaker is a functional two-pole thermal magnetic breaker.

The combination of circuit protection and surge protection provides extra flexibility and space saving in the loadcenter.

Product Features

- Complete home surge protection for all circuits plus a functional two-pole thermal magnetic breaker
- LEDs provide protection status
- Plug-on connection to the busbar provides superior protection and easy installation for new construction or renovation
- Eliminates the potential for incorrect installation of externally mounted surge devices—(longer "lead" lengths can reduce protection levels)

Type CH Surge Breakers

Type BR Surge Breakers

Catalog Number ①	Poles	Ampere Rating	Voltage	Phase	Frequency (Hz)	MCOV ②	VPR ③	I_n ④	SCCR ⑤	Surge Current Capacity, Per Phase Rating ⑥
Type CH Surge Breakers										
CH230SUR	Two-pole 10 kAIC	30	120/240 Vac	Single	50/60	150 V L–N, 300 V L–L	600 V L–N, 1000 V L–L	10 kA	10 kA	36 kA (L1–N 36 kA, L2–N 36 kA)
CH250SUR		50	120/240 Vac	Single	50/60	150 V L–N, 300 V L–L	600 V L–N, 1000 V L–L	10 kA	10 kA	36 kA (L1–N 36 kA, L2–N 36 kA)
Type BR Surge Breakers										
BR230SUR	Two-pole 10 kAIC	30	120/240 Vac	Single	50/60	150 V L–N, 300 V L–L	600 V L–N, 1000 V L–L	10 kA	10 kA	36 kA (L1–N 36 kA, L2–N 36 kA)
BR250SUR		50	120/240 Vac	Single	50/60	150 V L–N, 300 V L–L	600 V L–N, 1000 V L–L	10 kA	10 kA	36 kA (L1–N 36 kA, L2–N 36 kA)

Notes

① Clamshell packaging available with CS modification code on the end of catalog number.
② MCOV: Maximum Continuous Operating Voltage that may be applied to the device per mode.
③ VPR: Voltage Protection Rating is the measured limiting voltage after a surge event.
④ I_n: Nominal Discharge Current is the current that the device can withstand for 15 impulses.
⑤ SCCR: The amount of current the product can withstand under short-circuit conditions.
⑥ Surge Current Capacity: The maximum one time surge current rating per phase.

Surge Protection Receptacles with LED Indicators and Audible Alarm

Product Description

- Two-pole, three-wire grounding
- 15 A, 125 Vac; 20 A, 125 Vac; NEMA 5-15R and 5-20R

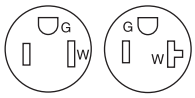

5-15R 5-20R

ArrowLink option available. Add "M" suffix to standard catalog number (example 8300WS, 8300WSM).

Build-to-spec customizable devices.

5362_S

IG5350_S

IG1208

1209

35M2S

Catalog Number	Color Suffix	Ampere Rating	Voltage	NEMA	Description		
Receptacles with Audible Alarm and LED Indicators, Back and Side Wire							
5262__S	BL, GY, V, W	15	125 Vac	5-15R	Surge duplex receptacle	■	■
IG5262__S	BL, GY, RN, V, W				IG Surge duplex receptacle	■	■
5362__S	BL, GY, V, W	20	125 Vac	5-20R	Surge duplex receptacle	■	■
IG5362__S	BL, GY, RN, V, W				IG Surge duplex receptacle	■	■
560 Joules, max. surge current—18 kA per mode							
Receptacles with LED Indicators, Back and Side Wire							
5250__S	BL, GY, V, W	15	125 Vac	5-15R	Surge duplex receptacle	■	■
IG5250__S	BL, GY, RN, V, W				IG Surge duplex receptacle	■	■
5350__S	BL, GY, V, W	20	125 Vac	5-20R	Surge duplex receptacle	■	■
IG5350__S	BL, GY, RN, V, W				IG Surge duplex receptacle	■	■
840 Joules, max. surge current—18 kA per mode							
Receptacles with Audible Alarm							
1208__	V, W	15	125 Vac	5-15R	Surge duplex receptacle	■	■
IG1208__	V, W				IG Surge duplex receptacle	■	■
1210__	BL, V, W	20	125 vac	5-20R	Surge duplex receptacle	■	■
IG1210__	V, W				IG Surge duplex receptacle	■	■
340 Joules, max. surge current—12 kA per mode							

Catalog Number	Color Suffix	Ampere Rating	Voltage	Description
Multimedia Wallplates with Surge Protectors				
35M2S-__	W	15	125	Multimedia wallplate with recessed duplex surge receptacle
cETLus listed to UL1863 & ANSI/UL 60950-1, CSA C22.2 no. 60950-1-03; complies with all TIA/EIA 568-A & 570-B requirements				

Catalog Number	Color Suffix	Description
Replacement Surge Bloc Module		
1209__	A, BL, GY, V, W	Replacement module

Catalog Number	Color Suffix	Description
Accessories for Surge Protection Receptacles		
PJ26BL	BL	1-Gang mid-size decorator polycarbonate wallplate
PJ26W	W	1-Gang mid-size decorator polycarbonate wallplate
PJ26IG	RN	1-Gang mid-size decorator polycarbonate wallplate, pre-marked "ISOLATED GROUND"

Notes

For ordering devices, include catalog number followed by the color suffix: BL (Blue), GY (Gray), RD (Red), RN (Orange), V (Ivory), W (White)

BL	GY	RD	RN	V	W
(Blue)	(Gray)	(Red)	(Orange)	(Ivory)	(White)

Compliances, specifications and availability are subject to change without notice.

Factory-Installed Surge Protection

- Includes a CHSPT2ULTRA and a two-pole 50 A circuit breaker
- Increases the effectiveness of surge protection due to reduced lead length
- A modified deadfront allows for easy viewing of indicating lights for status indication

Surge Installed

Surge Installed Loadcenters

Catalog Number	Description	Cover Catalog Number Combination	Surface
CHSUR42N225L ①	42 ckt, 225 A, convertible	**CHSUR8LF**	**CHSUR8LS**
CHSUR42L225L2 ①	42 ckt, 225 A, convertible ②	**CHSUR8LF**	**CHSUR8LS**
CHSUR42B200L2 ①	42 ckt, 200 A, main breaker	**CHSUR8LF**	**CHSUR8LS**
CHSUR32N225K ①	32 ckt, 225 A, convertible	**CHSUR8KF**	**CHSUR8KS**
CHSUR32L225K ①	32 ckt, 225 A, convertible ②	**CHSUR8KF**	**CHSUR8KS**
CHSUR32B200K ①	32 ckt, 200 A, main breaker	**CHSUR8KF**	**CHSUR8KS**
CHSUR32B150K ①	32 ckt, 150 A, main breaker	**CHSUR8KF**	**CHSUR8KS**
CHSUR32B100K ①	32 ckt, 100 A, main breaker	**CHSUR8KF**	**CHSUR8KS**
CHSUR24L125E ①	24 ckt, 125 A, convertible ②	**CHSUR8EF**	**CHSUR8ES**
CHSUR24B100E ①	24 ckt, 100 A, main breaker	**CHSUR8EF**	**CHSUR8ES**
BRSUR4040N200	40/40 ckt, 200 A, convertible	Cover included	
BRSUR4040L200	40/40 ckt, 200 A, main lug	Cover included	
BRSUR4040B200	40/40 ckt, 200 A, main breaker	Cover included	
BRSUR3040N200	30/40 ckt, 200 A, convertible	Cover included	
BRSUR3040L200	30/40 ckt, 200 A, main lug	Cover included	
BRSUR3040B200	30/40 ckt, 200 A, main breaker	Cover included	

Surge Ready Loadcenters

- Provides a mounting provision for CHSPT2ULTRA
- A modified deadfront allows for easy viewing of indicating lights

Surge Ready

Surge Ready Loadcenters (Provision Only, CHSPT2ULTRA and Breaker Not Included)

Catalog Number	Description	Cover Catalog Number Combination	Surface
CHEC42N225L ①	42 ckt, 225 A, convertible	**CHSUR8LF**	**CHSUR8LS**
CHEC42L225L ①	42 ckt, 225 A, convertible ②	**CHSUR8LF**	**CHSUR8LS**
CHEC42B200L ①	42 ckt, 200 A, main breaker	**CHSUR8LF**	**CHSUR8LS**
CHEC32L225K ①	32 ckt, 225 A, convertible ②	**CHSUR8KF**	**CHSUR8KS**
CHEC32N225K ①	32 ckt, 225 A, convertible	**CHSUR8KF**	**CHSUR8KS**
CHEC32B200K ①	32 ckt, 200 A, main breaker	**CHSUR8KF**	**CHSUR8KS**
CHEC32B150K ①	32 ckt, 150 A, main breaker	**CHSUR8KF**	**CHSUR8KS**
CHEC32B100K ①	32 ckt, 100 A, main breaker	**CHSUR8KF**	**CHSUR8KS**
CHEC24L125E ①	24 ckt, 125 A, convertible ②	**CHSUR8EF**	**CHSUR8ES**
CHEC24B100E ①	24 ckt, 100 A, main breaker	**CHSUR8EF**	**CHSUR8ES**

Notes

① Order cover separately.
② With main lugs installed.

SPD Type 2 Plug-On Surge Protection—UL 1449 3rd Edition

Product Features

- Convenient surge protection for the loadcenter

	Catalog Number	Description	Connection	Voltage	Phase	Frequency (Hz)	MCOV ①	VPR ②	I_n ③	SCCR ④	Surge Current Capacity, Per Phase Rating ⑤
BRSURGE	**BRSURGE**	UL for use in a single-phase Type BR loadcenter. This unit is classified by UL for use in select GE, ITE/Siemens and Crouse-Hinds panels (refer to Pub. No. 5655B65H01 for additional details).	Plug on to the loadcenter bus; see instructions.	120/240 Vac	Single	60	150 V L1–N, 300 V L–L	600 V L1–N, 1000 V L–L	3 kA	10 kA	18 kA
CHSA	**CHSA**	UL and CSA for use in a Type CH loadcenter.	Plug on to the loadcenter bus; see instructions.	120/240 Vac	Single	60	150 V L1–N, 300 V L–L	600 V L1–N, 1000 V L–L	3 kA	10 kA	18 kA
BRSURGECSA	**BRSURGECSA**	CSA for use in an Eaton Type BR loadcenter.	Plug on to the loadcenter bus; see instructions.	120/240 Vac	Single	60	150 V L1–N, 300 V L–L	600 V L1–N, 1000 V L–L	3 kA	10 kA	18 kA
CHQSA	**CHQSA**	This device is UL classified to be used in place of Square D Type QO surge arresters (refer to Pub-23974).	Plug on to the loadcenter bus; see instructions.	120/240 Vac	Single	60	150 V L1–N, 300 V L–L	600 V L1–N, 1000 V L–L	3 kA	10 kA	18 kA

Notes

① MCOV: Maximum Continuous Operating Voltage that may be applied to the device per mode.
② VPR: Voltage Protection Rating is the measured limiting voltage after a surge event.
③ I_n: Nominal Discharge Current is the current that the device can withstand for 15 impulses.
④ SCCR: The amount of current the product can withstand under short-circuit conditions.
⑤ Surge Current Capacity: The maximum one-time surge current rating per phase.

For warranty details, go to www.eaton.com/surgetrap.

Residential Standby Backup Power Solutions

3.1 Standby Generators

Product Description V1-T3-2
Application Description V1-T3-2
Features, Benefits and Functions V1-T3-2
Standards and Certifications V1-T3-2
Catalog Number Selection V1-T3-3
Product Selection V1-T3-3
Air-Cooled Generators V1-T3-3
Liquid-Cooled Generators V1-T3-4
Accessories V1-T3-5
Sizing Guidelines V1-T3-6
Dimensions V1-T3-6

3.2 Portable Generators

Product Selection V1-T3-8
Dimensions V1-T3-10

3.3 Automatic Transfer Switches

Product Description V1-T3-11
Application Description V1-T3-11
Standards and Certifications V1-T3-12
Product Selection V1-T3-13
Standard Automatic Transfer Switches V1-T3-13
Green Automatic Transfer Switches—Featuring Active Load Management Technology V1-T3-13
ATS Ready Loadcenter V1-T3-14
Dimensions V1-T3-15

3.4 Manual Transfer Switches

Product Description V1-T3-16
Application Description V1-T3-16
Features, Benefits and Functions V1-T3-16
Standards and Certifications V1-T3-17
Reference Information V1-T3-17
Product Selection V1-T3-18
Manual Transfer Switches and Generator Panels Selection V1-T3-18
Power Inlet Boxes V1-T3-18
Technical Data and Specifications V1-T3-19
Dimensions V1-T3-19

Standby Generator Systems

EGENX20A

EGEN70

Contents

Description	*Page*
Standby Generators	
Catalog Number Selection	**V1-T3-3**
Product Selection	**V1-T3-3**
Accessories	**V1-T3-5**
Sizing Guidelines	**V1-T3-6**
Dimensions	**V1-T3-6**

Product Description

A standby generator system is a package of equipment specifically designed to provide substitute electrical power to a residence in the event of a utility power outage. These systems are comprised of a generator, transfer switch and the connections necessary for installation. Eaton's standby generator line consists of air-cooled and liquid-cooled models ranging from 8000 watts up to 150,000 watts.

Air-Cooled Standby

Eaton's air-cooled generators range from 8 to 22 kW and these units are perfect for automatically backing up every circuit within a home such as air conditioner units, refrigerators, lighting, furnace fans, sump pumps and water pumps.

Eaton's air-cooled standby generators offer fully automatic operation and provide most homeowners with enough power for complete whole house comfort. These units all operate at ultra quiet 66 dB, or less, sound level.

Liquid-Cooled Standby

Eaton's liquid-cooled generators feature automotive style engines that range from 22 to 150 kW of power output. These units run so quietly that you'll forget that you own a generator until you need it. These units are available in steel or aluminum enclosures and are available in single- and three-phase in four voltages: 120/240 V, single-phase; 120/208 V, three-phase; 240 V, three-phase; and 277/480 V, three-phase.

Application Description

Standby generator systems are most often used in residential, agricultural and light commercial applications. Comfort and safety are key concerns of many homeowners who are dependent on an uninterrupted supply of electricity.

The increase in our dependence on power is due in part to the popularity of home offices and in-home health care. Many regions of the United States experience periodic power outages due to extreme weather conditions such as ice and snowstorms, heat waves, tornadoes or hurricanes.

Eaton highly recommends that any generator system be installed by a qualified electrician and/or generator installer.

Features, Benefits and Functions

Eaton's generator systems offer a wide range of features. All systems feature:

- Powerful engines
- Reliable Eaton transfer switches and control systems using switching duty rated circuit breakers
- Weekly exercise function
- Automatic transfer systems feature automatic start/stop

Standards and Certifications

- CSA®, cUL® and UL 2200 listed and approved
- SCAQMD (selected models only)
- All transfer switches are UL® 67 and UL 1008 listed as "Transfer Switches"
- All generators are UL 2200 listed

Listed Listed

Catalog Number Selection

Air-Cooled Generators

EGENX 22 A

Type	Rated Power (LP/NG)	Enclosure
Eaton generator EGENX Series	**8** = 8/7 kW **11** = 11/10 kW **16** = 16/16 kW **20** = 20/18 kW **22** = 22/19.5 kW	**A** = Aluminum **Blank** = Steel

Liquid-Cooled Generators

EGEN 25 A N S Y

kW Rating		Voltage Required	Fuel Type	Enclosure	SCAQMD Compliance
22	**60**	**A** = Single-phase 120/240 V	**N** = Natural gas	**A** = Aluminum	**N** = No
25	**70**	**G** = Three-phase 208 V	**L** = Liquid propane	**S** = Steel	**Y** = Yes
27	**80**	**J** = Three-phase 240 V			
30	**100**	**K** = Three-phase 480 V			
36	**130**				
45	**150**				
48					

Product Selection

Air-Cooled Generators

Rated Power kW (LP/NG)	Maximum Rated Amperes at 240 Vac (LP/NG)	Main Line Circuit Breaker Amperes	Enclosure Material	Engine Size	Number of Cylinders	Fuel Type	GFI Receptacle	SCAQMD Compliant	Sound Emissions (dB at 7 m)	Limited Warranty (yrs)	Catalog Number ①
8/7	33.3/29.2	35	Steel	410 cc	1	Liquid propane/ natural gas	No	Yes	62	5	**EGENX8**
11/10	45.8/41.7	50	Aluminum	530 cc	2	Liquid propane/ natural gas	No	Yes	63	5	**EGENX11A**
16/16	66.6/66.6	65/55	Aluminum	992 cc	2	Liquid propane/ natural gas	No	Yes	66	5	**EGENX16A**
20/18	83.3/75.0	90	Aluminum	999 cc	2	Liquid propane/ natural gas	Yes	Yes	66	5	**EGENX20A** ②
22/19.5	91.7/81.2	100	Aluminum	999 cc	2	Liquid propane/ natural gas	Yes	Yes	67	5	**EGENX22A** ②

Notes

① Battery to be furnished by others. Recommended size: Group 26R, 12 V, 225 CCA min.

② Includes base fascia (No. EGENFASCIA) as standard.

EGEN48ANAN

Liquid-Cooled Generators ①②

Catalog Number Prefix	kW Rating	Voltages Available	Fuel Type	Enclosure	SCAQMD Compliance ③
EGEN22	22	**G**—208 V, three-phase	**N**—NG/LP field convertible (Default set up for NG)	**S**—Steel	**Y**—Yes (Default Compliant)
		J—240 V, three-phase			
EGEN25	25	**A**—120/240 V, single-phase	**N**—NG/LP field convertible (Default set up for NG)	**S**—Steel	**Y**—Yes (Default Compliant)
		G—208 V, three-phase			
		J—240 V, three-phase			
EGEN27	27	**A**—120/240 V, single-phase	**N**—NG/LP field convertible (Default set up for NG)	**A**—Aluminum	**Y**—Yes (Default Compliant)
		G—208 V, three-phase			
		J—240 V, three-phase			
EGEN30	30	**A**—120/240 V, single-phase	**N**—NG/LP field convertible (Default set up for NG)	**S**—Steel	**Y**—Yes (Default Compliant)
		G—208 V, three-phase			
		J—240 V, three-phase			
EGEN36	36	**A**—120/240 V, single-phase	**N**—NG/LP field convertible (Default set up for NG)	**A**—Aluminum	**Y**—Yes
		G—208 V, three-phase			
		J—240 V, three-phase			**N**—No
		K—480 V, three-phase			
EGEN45	45	**A**—120/240 V, single-phase	**N**—NG/LP field convertible (Default set up for NG)	**S**—Steel	**Y**—Yes
		G—208 V, three-phase			
		J—240 V, three-phase			**N**—No
		K—480 V, three-phase			
EGEN48	48	**A**—120/240 V, single-phase	**N**—NG/LP field convertible (Default set up for NG)	**A**—Aluminum	**Y**—Yes
		G—208 V, three-phase			
		J—240 V, three-phase			**N**—No
		K—480 V, three-phase			
EGEN60	60	**A**—120/240 V, single-phase	**N**—Natural gas	**A**—Aluminum	**Y**—Yes
		G—208 V, three-phase			
		J—240 V, three-phase	**L**—Liquid propane	**S**—Steel	**N**—No
		K—480 V, three-phase			
EGEN70	70	**A**—120/240 V, single-phase	**N**—Natural gas	**A**—Aluminum	**Y**—Yes
		G—208 V, three-phase			
		J—240 V, three-phase	**L**—Liquid propane		**N**—No
		K—480 V, three-phase			
EGEN80	80	**A**—120/240 V, single-phase	**N**—Natural gas	**A**—Aluminum	**Y**—Yes
		G—208 V, three-phase			
		J—240 V, three-phase	**L**—Liquid propane		**N**—No
		K—480 V, three-phase			
EGEN100	100	**A**—120/240 V, single-phase	**N**—Natural gas	**A**—Aluminum	**Y**—Yes
		G—208 V, three-phase			
		J—240 V, three-phase	**L**—Liquid propane		**N**—No
		K—480 V, three-phase			
EGEN130	130	**A**—120/240 V, single-phase	**N**—Natural gas	**A**—Aluminum	**Y**—Yes
		G—208 V, three-phase			
		J—240 V, three-phase	**L**—Liquid propane		**N**—No
		K—480 V, three-phase			
EGEN150	150	**A**—120/240 V, single-phase	**N**—Natural gas	**A**—Aluminum	**Y**—Yes
		G—208 V, three-phase			
		J—240 V, three-phase	**L**—Liquid propane		**N**—No
		K—480 V, three-phase			

Notes

① All liquid-cooled models suitable for "optional" standby backup power only, as dictated by NEC Article 702/NFPA 70. Not suitable for neither "emergency" nor "legally required" applications as dictated by NEC Article 700/701 and NFPA 110.

② Models 70–150 kW include battery. For all other liquid-cooled models, battery must be furnished by others.

③ South Coast Air Quality Management District (CA and MA). Check your local requirements.

Accessories

Generator Accessories—Air and Liquid-Cooled Generators

Description	Catalog Number
General Accessories	
Air-cooled transportation cart	**EGENCART**
Bisque paint kit for 2009 model lineup	**EGENPAINT**
Display shell—bisque color	**EGENSHELL**
Generator fascia for air-cooled models. Bisque color (included as standard on EGENX20A and EGENX22A models)	**EGENFASCIA**
Wireless Remote Monitoring	
Advanced wireless remote monitor w/smart device connectivity. Air-cooled/liquid-cooled generators. 2009 models or newer	**EGENMOBILE**
Adapter wire harness kit for EGENMOBILE. Required for liquid-cooled generators only 22–150 kW. 2009 models or newer	**EGENKIT**
Basic in-house remote wireless monitor. Compatible with air/liquid-cooled models. 2009 models or newer	**EGENinHOME**
Adapter wire harness kit for EGENinHOME. Required for liquid-cooled units only 22–150 kW. 2009 models or newer	**EGENinHOMEKIT**
Cold Weather Kits	
Cold weather kit for all air-cooled generator models (8–20 kW). Battery and crankcase warmer	**6212CH**
22, 27, 36, 45 and 60 kW (2.4 L) cold weather kit	**5630CH**
25 and 30 kW (1.5 L) cold weather kit	**6175CH**
100 and 130 kW (6.8 L) cold weather kit	**5633CH**
48 (5.4 L), 80 (4.6 L) and 70 and 150 kW (6.8 L) cold weather kit	**5632CH**
25 and 30 kW (1.6 L) cold weather kit for models prior to February 2012	**5629CH**
48 kW (4.2 L) cold weather kit for models prior to February 2012	**5631CH**
Extreme Cold Weather Kits	
25 and 30 kW extreme cold weather kit 1.5 L engine	**6174CH**
25 and 30 kW extreme cold weather kit 1.6 L engine (prior to February 2012)	**5615CH**
22, 27, 36, 45 and 60 kW extreme cold weather kit for 2.4 L engine	**5616CH**
48 kW extreme cold weather kit for 5.4 L engine	**6204CH**
48 kW extreme cold weather kit for 4.2 L engine (prior to February 2012)	**5618CH**
70, 100 and 130 kW generator extreme cold weather kit for 6.8 L engine gear drive	**5620CH**
80 kW extreme cold weather kit for 4.6 L engine	**5619CH**
150 kW generator extreme cold weather kit for 6.8 L engine direct drive	**5667CH**
Extreme cold weather kit (engine warmer) for air-cooled 8–10 kW, 410/530 cc engines (after April 2010)	**5863CH**
Extreme cold weather kit (engine warmer) for air-cooled 14–20 kW, 760/992/999 cc engines (after April 2010)	**5864CH**
Maintenance Kits	
8 kW generator maintenance kit 410 cc engine. For #EGENX8 model only	**6482CH**
11 kW generator maintenance kit 530 cc engine. For #EGENX11A model only	**6483CH**
16 kW generator maintenance kit, 992 cc engine. For #EGENX16A model only	**6484CH**
20 kW generator maintenance kit, 999 cc engine. For #EGENX20A model only	**6485CH**
22 kW generator maintenance kit, 999 cc engine. For #EGENX22A model only	**6485CH**
8 kW generator maintenance kit 410 cc engine. #EGEN8 vintage model only	**5662CH**
10 kW generator maintenance kit 530 cc engine. #EGEN10 vintage model only	**5663CH**
14 and 17 kW generator maintenance kit, 760/990 cc engine. #EGEN14 and #EGEN17-17A vintage models only	**5664CH**
14 and 17 kW generator maintenance kit, 760/990 cc engine. For #EGENX14 and #EGENX17-17A vintage models only	**6484CH**
20 kW generator maintenance kit, 999 cc engine. #EGEN20A vintage model only	**5665CH**
22 and 27 kW generator maintenance kit, 2.4 L engine	**5656CH**
25 and 30 kW generator maintenance kit, 1.5 L engine	**6176CH**
25 and 30 kW generator maintenance kit, 1.6 L engine (prior to February 2012)	**5655CH**
36 kW generator maintenance kit, 2.4 L engine	**5984CH**
45 kW generator maintenance kit, 2.4 L engine	**6172CH**
48 kW generator maintenance kit, 4.2 L engine	**5658CH**
60 kW generator maintenance kit, 2.4 L engine	**6171CH**
80 kW generator maintenance kit, 4.6 L engine	**5985CH**
70, 100, 130 and 150 kW generator maintenance kit, 6.8 L engine	**5660CH**

EGENMOBILE

Cold Weather Kits

Extreme Cold Weather Kits

Maintenance Kits

Sizing Guidelines

When selecting the essential circuits that will be switched to "Backup Power," it is important that the sum of the combined circuit loads does not exceed the wattage/amperage capacity of the generator. To help you with your selection of essential circuits, please add up the total wattage of all electrical devices to be connected at one time. This total should NOT be greater than the generator's wattage capacity.

Refer to Eaton Generator Sizing Guide Publication Number TD00405018E and consult with a trained professional.

Circuit Selection ①②③

Device	Common Running Watts
Air conditioner (12,000 btu)	1700
Air conditioner (24,000 btu)	3800
Air Conditioner (40,000 btu)	6000
Battery charger (20 amp)	500
Circular saw (6-1/2-inch)	800–1000
Clothes dryer (electric)	5750
Clothes dryer (gas)	700
Clothes washer	1150
Coffee maker	1750
Compressor (1 hp)	2000
Compressor (1/2 hp)	1400
Compressor (3/4 hp)	1800
Curling iron	700
Dehumidifier	650
Electric blanket	400
Electric range (per element)	1500
Electric skillet	1250
Freezer	700
Furnace fan (3/5 hp)	875
Garage door opener	500–750
Hair dryer	1200
Hand drill	250–1100
Iron	1200
Jet pump	800
Light bulb	100
Microwave oven	700–1000
Milk cooler	1100
Oil burner on furnace	300
Oil fired space heater (140,000 btu)	400
Oil fired space heater (30,000 btu)	150
Oil fired space heater (85,000 btu)	225
Radio	50–200
Refrigerator	700
Slow cooker	200
Submersible pump (1 hp)	2000
Submersible pump (1/2 hp)	1500
Submersible pump (1-1/2 hp)	2800
Sump pump	800–1050
Table saw (10-inch)	1750–2000
Television	200–500
Toaster	1000–1650

Dimensions

Approximate Dimensions in Inches (mm)

Air-Cooled Standby

Catalog Number	Length	Width	Height	Weight in Lbs (kg)
EGENX8	48.00 (1219.2)	25.00 (635.0)	29.00 (736.6)	360 (163.0)
EGENX11A	48.00 (1219.2)	25.00 (635.0)	29.00 (736.6)	373 (169.2)
EGENX16A	48.00 (1219.2)	25.00 (635.0)	29.00 (736.6)	437 (198.2)
EGENX20A	48.00 (1219.2)	25.00 (635.0)	29.00 (736.6)	451 (204.6)
EGENX22A	48.00 (1219.2)	25.00 (635.0)	29.00 (736.6)	476 (216.0)

Liquid-Cooled Standby

Catalog Number	Length	Width	Height	Weight in Lbs (kg)
EGEN22	62.00 (1574.8)	29.00 (736.6)	34.00 (863.6)	895 (406.3)
EGEN25	63.00 (1600.2)	30.00 (762.0)	35.00 (889.0)	875 (397.3)
EGEN27	64.00 (1625.6)	31.00 (787.4)	36.00 (914.4)	891 (404.5)
EGEN30	60.00 (1651.0)	32.00 (812.8)	37.00 (939.8)	935 (424.5)
EGEN36	77.00 (1955.8)	34.00 (863.6)	45.00 (1143.0)	1683 (764.1)
EGEN45	78.00 (1981.2)	35.00 (889.0)	46.00 (1168.4)	1414 (642.0)
EGEN48	79.00 (2006.6)	36.00 (914.4)	47.00 (1193.8)	1703 (773.2)
EGEN60 ④	80.00 (2032.0)	37.00 (939.8)	48.00 (1219.2)	1650 (749.1)
EGEN70 ④	97.00 (2463.8)	37.00 (939.8)	48.00 (1219.2)	2185 (992.0)
EGEN80 ④	115.00 (2921.0)	36.80 (934.7)	79.00 (2006.6)	2010 (912.5)
EGEN100 ④	116.00 (2946.4)	36.80 (934.7)	80.00 (2032.0)	2705 (1228.1)
EGEN130 ④	117.00 (2971.8)	36.80 (934.7)	81.00 (2057.4)	2873 (1304.3)
EGEN150 ④	118.00 (2997.2)	36.80 (934.7)	82.00 (2082.8)	2666 (1210.4)

Notes

① The rated wattage of lights can be taken from light bulbs. The rated wattage of tools, appliances and motors can usually be found on a data plate or decal affixed to the device.

② If the appliance, tool or motor does not give wattage, multiply 120 volts times the ampere rating to determine watts (volts x amps = watts) for single-phase only.

③ Some electric motors (induction types) require about three times more watts of power for starting than for running. This surge lasts for only a few seconds. Be sure you allow for this high starting wattage when selecting electrical devices that will be energized by the backup power system:
Figure the watts required to start the largest motor.
Add that to the total running watts of all other connected loads.

④ All weights provided for steel enclosures only.

EGENP8000EX

Contents

Description	*Page*
Portable Generators	
Product Selection	**V1-T3-8**
Dimensions	**V1-T3-10**

Product Description

Whereas permanently installed standby systems are designed for larger homes, small businesses or secondary residences, portable generators are primarily used for smaller homes, essential loads, construction sites, camping, tailgating and wherever portable temporary power is required.

Application Description

Portable generator systems are primarily used for smaller homes or for construction sites where temporary power is required. Permanently installed standby systems are designed for larger homes, small businesses or secondary residences, such as vacation homes and cabins, that require uninterrupted power for critical loads.

As the name indicates and due to physical size and weight, portable generators can easily be transported from one location to another.

Designed for outdoor use only, common applications vary from homes to camping to construction sites, providing backup power everywhere electrical power is needed.

Standards and Certifications

- UL Listed

UL Listed

Catalog Number Selection

Portable Generators

EGEN P 8000 E X

Eaton generator

Type
P = Portable

Power Output
5500 = 5.5 kW
6500 = 6.5 kW
7000 = 7.5 kW
8000 = 8 kW
15000 = 15 kW
17500 = 17.5 kW

Startup Method
Blank = Manual/recoil only
E = Electric and/or manual/recoil

Model
Blank = General purpose
CA = General purpose "CARB" compliant (CA only)
X = XG Series

Product Selection

Portable Generators

	Running Watts	Starting Watts	Engine Displacement/ Type	Startup Method	Fuel Tank Capacity (gal) ①	Approx. Running Time at 1/2 load (hrs)	Battery Included	Outlets Configuration	Warranty Residential/ Commercial (yrs)	Catalog Number
General Purpose (49-State)										
EGENP5500	5500	6875	389 cc/OHV	Manual	7.2	10	No	1 x 30 A L14-30R (twist lock), 2 x 20 A 5-20R duplex	2/1 Ltd	**EGENP5500**
EGENP6500	6500	8125	389 cc/OHV	Manual	7.2	10	No	1 x 30 A L14-30R (twist lock), 2 x 20 A 5-20R duplex	2/1 Ltd	**EGENP6500**
EGENP6500E	6500	8125	389 cc/OHV	Manual/ electric	7.2	10	Yes	1 x 30 A L14-30R (twist lock), 2 x 120 A 5-20R duplex	2/1 Ltd	**EGENP6500E**
EGENP7500E	7500	9375	420 cc/OHV	Manual/ electric	8.0	12	Yes	1 x 30 A L14-30R (twist lock), 2 x 20 A 5-20R duplex	2/1 Ltd	**EGENP7500E**
EGENP15000E	15000	22500	992 cc/OHVI	Manual/ electric	16.0	12	Yes	1 x 50 A 14-50R, 1 x 30 A L14-30R (twist lock), 2 x 30 A L5-30R (twist lock), 1 x 20 A 5-20R duplex, 1 x 20 A GFCI 5-20R duplex	2/1 Ltd	**EGENP15000E**
EGENP17500E	17500	26250	992 cc/OHVI	Manual/ electric	16.0	10	Yes	1 x 50 A 14-50R, 1 x 30 A L14-30R (twist lock), 1 x 30 A L5-30R (twist lock),1 x 20 A 5-20R duplex, 1 x 20 A 5-20R GFCI duplex	2/1 Ltd	**EGENP17500E**

Note

① Requires gasoline as fuel to operate.

Portable Generators, continued

	Running Watts	Starting Watts	Engine Displacement/ Type	Startup Method	Fuel Tank Capacity (gal) ①	Approx. Running Time at 1/2 load (hrs)	Battery Included	Outlets Configuration	Warranty Residential/ Commercial (yrs)	Catalog Number
XG Series										
EGENP7000EX	7000	8750	407 cc/OHVI	Manual/ electric	9	10	Yes	1 x 30 A L14-30R (twist lock), 2 x 20 A GFCI 5-20R duplex	2/1 Ltd	**EGENP7000EX**
EGENP8000EX	8000	10000	407 cc/OHVI	Manual/ electric	10	10	Yes	1 x 30 A L14-30R (twist lock), 2 x 20 A GFCI 5-20R duplex	2/1 Ltd	**EGENP8000EX**
EGENP10000EX	10000	12500	530 cc/OHVI	Manual/ electric	10	10	Yes	1 x 50 A 14-50R, 1 x 30 A L14-30R (twist lock), 1 x 30 A L5-30R (twist Lock), 2 x 20 A GFCI 5-20R duplex	2/1 Ltd	**EGENP10000EX**
CARB ② Compliant (Required in California Only)										
EGENP5500CA	5500	6875	389 cc/OHV	Manual	7.2	10	No	1 x 30 A L14-30R (twist lock), 2 x 20 A GFCI 5-20R duplex	2/1 Ltd	**EGENP5500CA**
EGENP6500CA	6500	8125	389 cc/OHV	Manual	7.2	10	No	1 x 30 A L14-30R (twist lock), 2 x 120 A 5-20R duplex	2/1 Ltd	**EGENP6500CA**

Notes

① Requires gasoline as fuel to operate.

② California Air Resources Board.

Dimensions

Approximate Dimensions in Inches (mm)

Portable Generators

Catalog Number	Length	Width	Height	Weight Lbs (kg)
EGENP5500	27.25 (692.2)	27.00 (685.8)	25.00 (635.0)	171.0 (77.6)
EGENP6500	27.25 (692.2)	27.00 (685.8)	25.00 (635.0)	175.0 (79.5)
EGENP6500E	27.25 (692.2)	27.00 (685.8)	25.00 (635.0)	186.0 (84.4)
EGENP7500E	27.25 (692.2)	27.00 (685.8)	25.00 (635.0)	191.5 (86.9)
EGENP15000E	48.50 (1231.9)	31.00 (787.4)	39.50 (1003.3)	363.0 (164.8)
EGENP17500E	48.50 (1231.9)	31.00 (787.4)	39.50 (1003.3)	390.0 (177.1)
EGENP7000EX	31.00 (787.4)	25.50 (647.7)	28.00 (711.2)	245.0 (111.2)
EGENP8000EX	31.00 (787.4)	25.50 (647.7)	28.00 (711.2)	235.0 (106.7)
EGENP10000EX	30.00 (762.0)	29.50 (749.3)	31.00 (787.4)	300.0 (136.2)
EGENP5500CA	27.25 (692.2)	27.00 (685.8)	25.00 (635.0)	170.9 (77.6)
EGENP6500CA	27.25 (692.2)	27.00 (685.8)	25.00 (635.0)	177.0 (80.3)

Residential Automatic Transfer Switches

Contents

Description	*Page*
Automatic Transfer Switches	
Standards and Certifications	**V1-T3-12**
Catalog Number Selection	**V1-T3-12**
Product Selection	**V1-T3-13**
ATS Ready Loadcenter	**V1-T3-14**
Dimensions	**V1-T3-15**

Product Description

50, 100, 150, 200 and 400 A Fully Automatic

All Eaton automatic transfer switches (ATS) monitor utility and generator voltages and will automatically connect to the appropriate source of power. Eaton offers two types of automatic transfer switches to suit your personal backup power needs—the standard ATS EGSX series with load shedding capabilities and the Green ATS EGSU series that provides a truly active load management solution.

Green Line of Automatic Transfer Switches

With the rising cost of commodities and fuel in today's economy, consumers are concerned with maximizing the value of their purchases.

Electrical loads are now intelligently managed with Eaton's Green Line of automatic transfer switches. The active load management inside each Green ATS allows the consumer to use 100% of the power rated output of the generator and/or use a smaller generator, reducing upfront installation costs and saving on ongoing fuel consumption costs.

As a part of Eaton's commitment to quality, every Green ATS, at no extra cost, will ship with a CHSPT2ULTRA whole surge protector, which will help prevent potential damage to valued electronics caused by power surges in the utility line.

Application Description

50, 100, 150, 200 and 400 A Switches

100, 200 and 400 A switches are capable of "whole house" power transfer in residential/small business applications.

50 A—Indoor Installation—Selected Load Pre-Wired

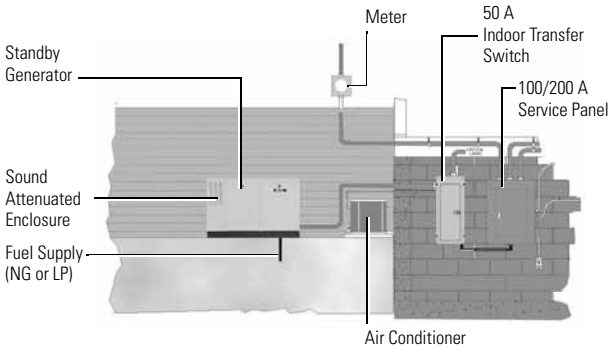

100/200 A—Outdoor Installation—Whole House Pre-Wired

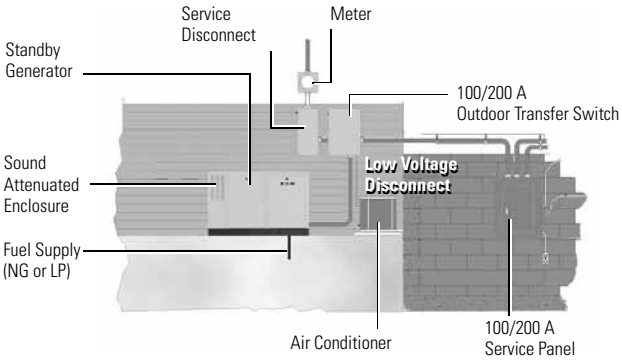

Standards and Certifications

- UL 1008 listed

Listed

Catalog Number Selection

Standard Automatic Transfer Switches—EGSX Series

E GSX 200 __ NSEA

Manufacturer
Eaton

Type
Generator transfer switch EGSX Series

Ampere Rating
50 = 50 A
100 = 100 A
150 = 150 A
200 = 200 A
400 = 400 A

Loadcenter (CH Type, Integral)
Blank = None
L12 = 12 circuits N1
L12R = 12 circuits N3R
L24R = 24 circuits N3R

Service Entrance Rated
NSEA = Service entrance (normal source only)
A = Non-service entrance

Green Automatic Transfer Switches—EGSU Series

E GSU 200 __ NSE ACA

Manufacturer
Eaton

Type
Generator universal transfer switch EGSU "Green" Series

Ampere Rating
100 = 100 A
150 = 150 A
200 = 200 A
400 = 400 A

Loadcenter (CH Type, Integral)
Blank = None
L24 = 24 circuits

Service Entrance Rated
NSE = Service entrance (normal source only)
Blank = Non-service entrance

Load Management
ACA = Active load management

Product Selection

EGSX50L12R

Standard Automatic Transfer Switches ①

Ampere Rating	Voltage	Service Entrance Rated	No. of Load Shed Contacts	Contactor Wire Size Range(s)	No. of Cables per Phase	Withstand Current (rms) at 240 Vac	No. of Circuits Included ②	Frequency (Hz)	Enclosure Type	Most Common Generator Sizes (kW) ③	Catalog Number
50	120/240	No	2	#14–#6	1	5000	12	50/60	NEMA 1 (indoor)	8, 11	**EGSX50L12**
50	120/240	No	2	#14–#6	1	5000	12	50/60	NEMA 3R (outdoor)	8, 11	**EGSX50L12R**
100	120/240	No	2	#14–#2/0	1	10,000	—	50/60	NEMA 3R (outdoor)	8, 11, 16	**EGSX100A**
100	120/240	Yes	2	#14–#2/0	1	25,000	—	50/60	NEMA 3R (outdoor)	8, 11, 16	**EGSX100NSEA**
100	120/240	No	2	#14–#2/0	1	10,000	24	50/60	NEMA 3R (outdoor)	8, 11, 16	**EGSX100L24RA**
150	120/240	Yes	2	#4–300 kcmil	1	25,000	—	50/60	NEMA 3R (outdoor)	16, 20, 22	**EGSX150NSEA**
200	120/240	No	2	#4–300 kcmil	1	10,000	—	50/60	NEMA 3R (outdoor)	16, 20, 22	**EGSX200A**
200	120/240	Yes	2	#4–300 kcmil	1	25,000	—	50/60	NEMA 3R (outdoor)	16, 20, 22	**EGSX200NSEA**
400	120/240	Yes	2	750 kcmil–2 300 kcmil–1/0	1/2	35,000	—	50/60	NEMA 3R (outdoor)	>22	**EGSX400NSEA**

EGSU200NSEACA

Green Automatic Transfer Switches ④—Featuring Active Load Management Technology

Ampere Rating	Voltage	Service Entrance Rated	Contactor Wire Size Range(s)	No. of Cables per Phase	Withstand Current (rms) at 240 Vac	No. of Circuits Included ②	Frequency (Hz)	Enclosure Type	Most Common Generator Sizes (kW) ③	Catalog Number ⑤
100	120/240	No	#14–#2/0	1	10,000	—	50/60	NEMA 3R (outdoor)	8, 11, 16	**EGSU100ACA**
100	120/240	Yes	#14–#2/0	1	25,000	—	50/60	NEMA 3R (outdoor)	8, 11, 16	**EGSU100NSEACA**
100	120/240	No	#14–#2/0	1	10,000	24	50/60	NEMA 3R (outdoor)	8, 11, 16	**EGSU100L24RACA**
150	120/240	Yes	#4–300 kcmil	1	25,000	—	50/60	NEMA 3R (outdoor)	16, 20, 22	**EGSU150NSEACA**
200	120/240	No	#4–300 kcmil	1	10,000	—	50/60	NEMA 3R (outdoor)	16, 20, 22	**EGSU200ACA**
200	120/240	Yes	#4–300 kcmil	1	25,000	—	50/60	NEMA 3R (outdoor)	16, 20, 22	**EGSU200NSEACA**
400	120/240	Yes	750 kcmil–2 300 kcmil–1/0	1/2	35,000	—	50/60	NEMA 3R (outdoor)	>22	**EGSU400NSEACA**

Notes

① Standard ATS "EGSX" Series compatible with Eaton generators only.
② Uses CH type circuit breakers.
③ For reference only. Generator size must be determined with proper/actual load calculations.
④ UNIVERSAL ATS: compatible with any single-phase, 120/240 V generator brand.
⑤ Whole house surge Cat. No. CHSPT2ULTRA included in every Green ATS "EGSU" Series.

ATS Ready Loadcenter

From the far-reaching power failures brought on by hurricanes and snow/ice storms, to the increasing power outage concerns and an aging electrical infrastructure, backup power is more important than ever. Eaton's ATS Ready loadcenter addresses future backup power needs by enabling a fast, efficient installation of an automatic transfer switch kit to convert from utility power to generator power.

The ATS Ready loadcenter gives homebuilders and electrical contractors the flexibility to install a generator ready system or to install a loadcenter and easily add an ATS in the future. Backup power had never been that versatile before.

ATS Ready Loadcenter Features

- CH Premium Type 200 A single-phase MCB 36-circuit loadcenter
- 50 A ATS "EGSX" type kit for factory or field installation (compatible with Eaton generators only)
- 22 circuits for non-essential loads and 14 circuits for essential backup power loads
- Versatile, space-saving design
- For use with 8 or 11 kW air-cooled generators
- CH cover included
- Lifetime warranty on CH loadcenter and breakers
- NEMA 1 design
- UL Listed

ATS Ready Loadcenter

	Description	Catalog Number
CH36B200EGP	ATS Ready loadcenter Kit CHEGSX50KIT must be ordered separately Loadcenter only. Includes provision for ATS kit	**CH36B200EGP**
CHEGSX50KIT	ATS "EGSX" kit for ATS Ready loadcenter Field-installable automatic transfer switch kit ATS Ready loadcenter CH36B200EGP must be ordered separately Intuitive, easy installation Compatible with Eaton generators only	**CHEGSX50KIT**
CH36B200EGPK	ATS Ready LC with factory-installed ATS kit Factory assembled Compatible with Eaton generator only. Generator needed to complete backup power system Recommended Eaton generators models: 8/7 kW–Catalog #EGENX8 11/10 kW–Catalog #EGENX11A	**CH36B200EGPK**

Dimensions

Approximate Dimensions in Inches (mm)

Automatic Transfer Switches

Catalog Number	Width	Height	Depth	Weight Lbs (kg)
EGSX50L12	14.25 (362.0)	21.00 (533.4)	4.00 (101.6)	25 (11.33)
EGSX50L12R	14.25 (362.0)	21.00 (533.4)	6.00 (152.4)	29 (13.15)
EGSX100A	14.46 (367.3)	16.87 (428.5)	5.32 (135.1)	25 (11.33)
EGSX100NSEA	14.46 (367.3)	16.87 (428.5)	5.32 (135.1)	28 (12.70)
EGSX100L24RA	14.46 (367.3)	29.33 (744.0)	5.32 (135.1)	38 (17.24)
EGSX200A	14.46 (367.3)	25.08 (637.0)	5.25 (133.4)	35 (15.87)
EGSX150NSEA	14.46 (367.3)	29.20 (741.7)	5.32 (135.1)	45 (20.41)
EGSX200NSEA	14.46 (367.3)	29.20 (741.7)	5.32 (135.1)	45 (20.41)
EGSU100L24RACA	14.46 (367.3)	29.33 (745.0)	5.32 (135.1)	38 (17.24)
EGSU100ACA	14.46 (367.3)	16.87 (428.5)	5.32 (135.1)	25 (11.33)
EGSU100NSEACA	14.46 (367.3)	16.87 (428.5)	5.32 (135.1)	28 (12.70)
EGSU150NSEACA	14.46 (367.3)	29.20 (741.7)	5.32 (135.1)	45 (20.41)
EGSU200ACA	14.46 (367.3)	25.08 (637.0)	5.25 (133.4)	35 (15.88)
EGSU200NSEACA	14.46 (367.3)	29.20 (741.7)	5.32 (135.1)	45 (20.41)
EGSU400NSEACA	23.14 (587.8)	35.55 (903.0)	10.00 (254.0)	120 (54.43)
CH36B200EGPK	14.31 (363.5)	47.50 (1206.5)	3.88 (98.6)	40 (18.14)

All Panels are Manufactured in the USA and Meet UL 1008

Contents

Description	*Page*
Manual Transfer Switches	
Standards and Certifications	**V1-T3-17**
Reference Information	**V1-T3-17**
Product Selection	**V1-T3-18**
Technical Data and Specifications	**V1-T3-19**
Dimensions	**V1-T3-19**

Learn Online

Product Description

A manual transfer switch is a device that is mounted next to the loadcenter (distribution panel) in the home or small business. The manual transfer switch is used in conjunction with a portable backup power generator and serves the purpose of turning selected circuits on and off during a power outage. The transfer switch panel allows the owner to start up a generator to restore power to critical circuits when utility power is not available.

The owner designates which circuits are critical, such as the refrigerator and certain lights. Sometimes called emergency power panels or emergency generator panels, manual transfer switch panels provide the homeowner or small business owner with a safe and easy way to continue using electrical appliances when the utility power is unavailable temporarily.

Application Description

Manual transfer switches are most often used in residential, agricultural and light commercial applications. Comfort and safety are key concerns of many homeowners who are dependent on an uninterrupted supply of electricity.

The increase in our dependence on power is due in part to the popularity of home offices and in-home health care. Various heavily populated regions of the United States experience periodic power outages due to extreme weather conditions, such as ice and snowstorms, heat waves, tornadoes or hurricanes. These regions that include the Pacific Northwest, Atlantic Coast and the Gulf Coast are the strongest markets for portable generators and manual transfer switches.

Features, Benefits and Functions

Eaton offers two manual transfer switch backup power solutions:

- Manual transfer switches
- Generator panels

Manual Transfer Switches

- Panel and components sold separately
- Hardwired generator connection
- Ideal for new construction/ larger loads
- Sturdy copper bus construction
- Uses CH and CHT circuit breaker types (sold separately)
- Mechanically interlocked main disconnects to prevent paralleling of normal and emergency power source
- Indoor and outdoor designs available

Manual Transfer Switch Indoor Design

Manual Transfer Switch Indoor/Outdoor Design

Generator Panels

- Mechanically interlocked main disconnects prevent paralleling of normal and emergency power source
- Panel and components sold separately
- Integral plug-in generator connection (power inlet box)
- All circuit breakers are included—switching duty rated
- Includes dual wattmeters for load balancing
- Indoor and outdoor designs available

Generator Panel Indoor Design

Generator Panel Outdoor Design

Standards and Certifications

- UL 67 listed
- UL 1008 listed

Listed

Reference Information

Cross-Reference

Watts	Number of Circuits	Ampere Rating	Catalog Number Eaton	Gen/Tran ①	EmerGen ①	Square D	Generac ②
5000	4–8	30	**CH48GEN3060R**	—	—	QO48M30DSGP	—
15,000	8–16	60	**CH816GEN6060**	—	—	QO48M60DSGP	—
5000	6	20	**CH6EGEN2060**	20216	6-5000	—	—
5000	6	20	**CH6EGEN2060R**	R20216	6-5000 + RTE657	—	—
5000	6	20	**CH6EGEN2060SU**	—	—	—	—
5000	6	20	**CH6EGEN2060RSU**	—	—	—	—
7500	10	30	**CH10EGEN3060**	302110-20	10-7500	—	—
7500	10	30	**CH10EGEN3060R**	R30211-20	10-7500 + RTE1075	—	—
7500	10	30	**CH10EGEN3060SUR**	—	—	—	—
7500	10	30	**CH10EGEN3060RSU**	—	—	—	—
7500	10	30	**CH10GEN5030SN**	—	—	—	—
7500	10	30	**CH10GEN5030RSN**	—	—	—	—
12,000	10	50	**CH10GEN5050SN**	—	—	—	—
12,000	10	50	**CH10GEN5050RSN**	—	—	—	—

Notes

① Gen/Trans device is not supplied with a power cord.

② Generac device is 7200 maximum watts on six-circuit device and 12,000 maximum watts on 10-circuit device.

Product Selection

Manual Transfer Switches and Generator Panels Selection

Enclosure Type	Watts	Number of Circuits	Ampere Rating	Main/ Emergency Ampere Rating	Feeder Breakers	Included Accessories	Catalog Number
Standard Manual Transfer Switch							
NEMA 3R	5000	4–8	30	Provision	Provision	None	**CH48GEN3060R**
NEMA 1	10,000	8–16	60	Provision	Provision	None	**CH816GEN6060**
Generator Panel							
NEMA 1	5000	6	20	60/20	5–1P151–1P20	None	**CH6EGEN2060**
NEMA 3R	5000	6	20	60/20	5–1P151–1P20	None	**CH6EGEN2060R**
NEMA 1	5000	6	20	60/20	5–1P151–1P20	Two-pole surge protector	**CH6EGEN2060SUR**
NEMA 3R	5000	6	20	60/20	5–1P151–1P20	Two-pole surge protector	**CH6EGEN2060RSU**
NEMA 1	7500	10	30	60/30	6–1P152–1P2012P30	None	**CH10EGEN3060**
NEMA 3R	7500	10	30	60/30	6–1P152–1P2012P30	None	**CH10EGEN3060R**
NEMA 1	7500	10	30	60/30	7–1P152–1P2012P30	Two-pole surge protector	**CH10EGEN3060SUR**
NEMA 3R	7500	10	30	60/30	7–1P152–1P2012P30	Two-pole surge protector	**CH10EGEN3060RSU**
Switched Neutral Manual Transfer Switch							
NEMA 1	7500	10	30	50/30	6–1P15, 2–1P20, 1–2P30	None	**CH10GEN5030SN**
NEMA 3R	7500	10	30	50/30	6–1P15, 2–1P20, 1–2P30	None	**CH10GEN5030RSN**
NEMA 1	12,000	10	50	50/50	6–1P15, 2–1P20, 1–2P30	None	**CH10GEN5050SN**
NEMA 3R	12,000	10	50	50/50	6–1P15, 2–1P20, 1–2P30	None	**CH10GEN5050RSN**

Power Inlet Boxes

Description	Ampere Rating	Voltage	Catalog Number
Flush flange kit (for use with generator panel only)	—	120/240 V	**CHEGENFKIT**
Power inlet box	20	120/240 V	**EGSPIB20**
Power inlet box	30	120/240 V	**EGSPIB30**
Power inlet box	50	120/240 V	**EGSPIB50**

Warranty

Manual Transfer Switch

- 15-year loadcenter warranty
- Lifetime branch breaker warranty

Generator Panel

- 15-year loadcenter warranty
- Lifetime branch breaker warranty

Technical Data and Specifications

- 10,000 AIC rating
- Switching devices must be circuit breakers
- Manual transfer switch must be supplied with neutral and ground
- Power inlet box must be connected to a circuit breaker for generator protection

Installation Diagrams

Manual Transfer Switches—Indoor Installation Diagram

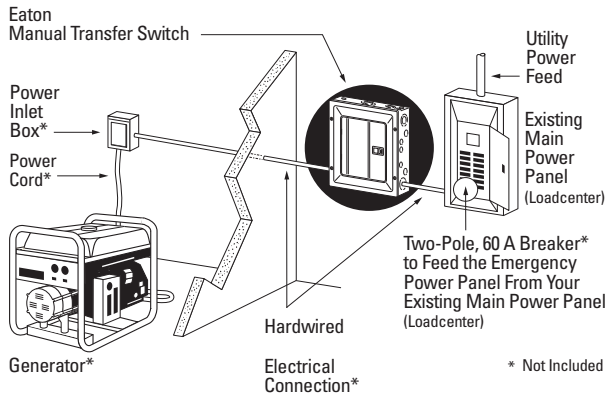

Generator Panels—Indoor Installation Diagram

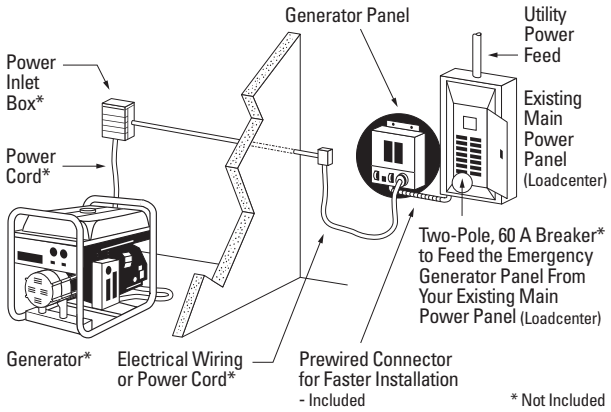

Manual Transfer Switches—Outdoor Installation Diagram

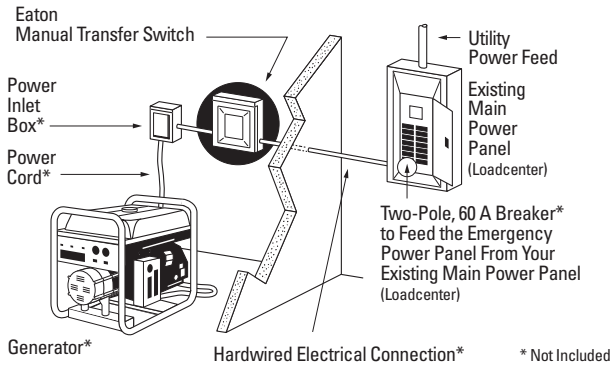

Generator Panels—Outdoor Installation Diagram

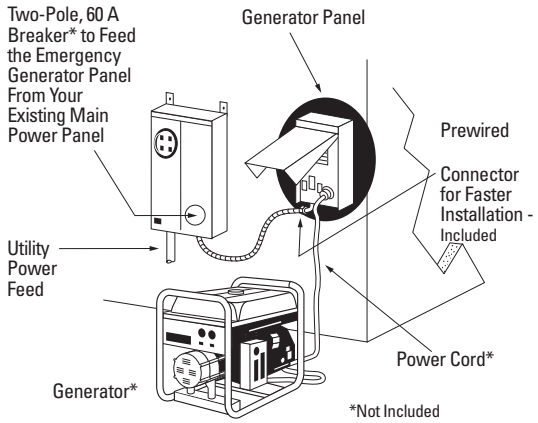

Dimensions

Approximate Dimensions in Inches (mm)

Manual Transfer Switch

Enclosure Type	Height	Width	Depth	Weight Lbs (kg)
NEMA 1	16.75 (425.5)	14.31 (363.5)	3.88 (98.5)	25 (11)
NEMA 3R	13.00 (330.2)	11.00 (279.4)	3.56 (90.4)	14 (6)

Generator Panel

Enclosure Type	Height	Width	Depth	Weight Lbs (kg) 6-Circuit	Weight Lbs (kg) 10-Circuit
NEMA 1	13.23 (336.0)	11.41 (289.8)	4.10 (104.1)	24 (11)	26 (12)
NEMA 3R	17.12 (434.8)	9.45 (240.0)	7.16 (181.9)	29 (13)	31 (14)

Group Metering and
Meter Breaker Family

4.1 Single Meter Sockets
Product Description V1-T4-2

4.2 Commercial Lever Bypass Sockets
Product Description V1-T4-10

4.3 Multiple Position Horizontal Ganged Sockets
Product Description V1-T4-18

4.4 Instrument Rated Sockets
Product Description V1-T4-25

4.5 Residential Pedestals
Product Description V1-T4-27

4.6 Accessories and Cross-Reference
Product Description V1-T4-29

4.7 Mechanical Lugs
Product Description V1-T4-34

4.8 Communications Grounding Device (NEC 250.94)
Product Description V1-T4-35

4.9 Meter Breakers
Residential Meter Breakers V1-T4-37
Non-EUSERC Combination Service Entrance Devices 100–200 A Styles V1-T4-39
Meets EUSERC Requirements Service Entrance Devices 100–225 A . V1-T4-48
West Coast All-In-One Design V1-T4-59
Mechanical Interlock Cover V1-T4-65
House Panels V1-T4-75
Commercial Safety Sockets V1-T4-83
CH Style Renovation Solutions V1-T4-86
Aluminum Meter Breakers V1-T4-87

4.10 Group Metering
Systems for Residential and Commercial Applications V1-T4-88
Meter Packs V1-T4-90
Type CCV 120/240 V Tenant Main Circuit Breaker V1-T4-95
Type CV 120/240 V Tenant Main Circuit Breaker V1-T4-96
Meter Packs—1MP, 1MM and 3MM Main Tenant Circuit Breakers . . . V1-T4-98
Main Service Modules V1-T4-101
Surge Metering V1-T4-115
Group Metering Inline Current Transformer Cabinets V1-T4-116
Residential Meter Stacks V1-T4-118
1MP, 1MM and 3MM Main Tenant Circuit Breakers V1-T4-127
Phase Balanced Stack V1-T4-128
Commercial Meter Stack Modules V1-T4-129
35MM, 37MM, 35SS and 37SS Main Tenant Circuit Breakers V1-T4-136

Learn
Online

Single Meter Sockets

Contents

Description	*Page*
Features and Benefits	**V1-T4-3**
Catalog Number Selection	**V1-T4-3**
Product Selection	**V1-T4-4**
Dimensions	**V1-T4-8**

Product Description

Single-Phase Three-Wire and Three-Phase Four-Wire 600 Vac Single Meter Sockets

All Eaton sockets are rated 600 Vac maximum and either 100, 200 or 320 A continuous. All have a minimum short-circuit rating of 10,000 rms symmetrical amperes (watthour meter is not included in rating).

All single meter sockets are UL labeled and are supplied in surface mounted outdoor enclosures. Confirm local utility acceptance prior to order entry.

Features and Benefits

Single Meter Sockets

Features	Benefits
Block assembly base exceeds 400 in-lbs of torque	Provides durability under the most extreme installation circumstances
One-piece, die-run enclosure	Eliminates tampering and extends product life
High visibility Eaton name embossed on cover	Company identity and brand preference
Knockouts are installer friendly	Labor savings, less time needed for removing knockouts
Oversized 7/8-inch diameter, heavy-duty, steel lug screws	Stronger connection component facilitates a reliable wire termination
Slide-nuts are captive	Allow for ease in installation of conductors and eliminates lost components
Horn bypass kit is field installable by changing out slide nut	Less inventory required and field modifications are simple
Integral triplex or quadplex ground extruded in neutral lug	One piece for terminating incoming/outgoing neutral conductors, which increases integrity of connections
100% plated bridge with 4-point mounting	Zinc chromate plated to provide superior corrosion resistance
kAIC rating	Tested and UL listed up to 200 kAIC rating with specified overcurrent protection devices
Provides a complete Eaton residential solution	Adding meter sockets to the already existing (loadcenter, surge, breakers, generators and AC disconnect) product lines that we already provide, makes Eaton a one-stop shop for our customers residential and light commercial needs
Copper-plated alloy jaws with reinforcing spring	Steel reinforcing springs used in all socket jaws to maintain electrical connections

Catalog Number Selection

Single Meter Sockets RS Group

UT RS 2 0 2 B CH

Note: The "U" prefix is always used first followed by other prefixes required in alphabetical order.

Standard Prefixes

- **A** = Aluminum enclosure
- **B** = Barrel lock provision, for an exposed INNER-TITE® or Brooks barrel lock; unit includes an internal lock receiver bracket
- **F** = Barrel Lock with guard provision, for a lock guard INNER-TITE or Brooks barrel lock; unit includes an internal lock receiver bracket
- **G** = Grounded fifth terminal (9 o'clock position)
- **H** = Horn bypass
- **I** = Inhibitor installed in wire connectors
- **M** = Temporary meter cover (waxed cardboard)
- **N** = No sealing ring (applies only to ring style sockets)
- **R** = Ring style socket
- **S** = Aluminum screw type sealing ring (applies only to ring style sockets)
- **T** = Grounding connector (#14–#2 Cu) for triplex ground
- **TT** = Two grounding connectors (#14–#2 Cu) for quadplex ground
- **U** = UL Underwriters Laboratories label
- **Z** = 5/16-inch hex head connector screw in place of slotted (100 A only)

Product Group

- **RS** = Residential service, single position
- **2R-6R** = Residential service, multiple position
- **2H-6H** = Commercial or residential service, multiple position
- **H** = Commercial or residential service, single position

Ampere Rating

- **1** = 100 A
- **2** = 200 A
- **5** = 150 A

Service Design

- **0** = Overhead
- **1** = Combination overhead/underground
- **2** = Underground, side wired
- **3** = Combination overhead/underground, side wired

Maximum Conductor (Line and Load)

- **0** = 0.38-inch stud connectors
- **1** = #2/0 connectors
- **2** = #250 kcmil connectors
- **3** = #350 kcmil connectors

Standard Suffixes

- **A** = Solid top
- **B** = Small hub opening
- **C** = Small hub closing plate mounted
- **L** = 1.25-inch (31.8 mm) hub mounted
- **M** = 1.50-inch (38.1 mm) hub mounted
- **N** = 2.00-inch (50.8 mm) hub mounted
- **P** = 2.50-inch (63.5 mm) hub mounted
- **T** = Large hub opening hub
- **U** = Large hub cover plate hub mounted
- **V** = 2.50-inch (63.5 mm) large hub mounted
- **Q** = 3.00-inch (76.2 mm) large hub mounted
- **R** = 3.50-inch (88.9 mm) large hub mounted
- **S** = 4.00-inch (101.6 mm) large hub mounted
- **Z** = Large to small hub adapter mounted

Product Selection

URS212ACH

Residential Ringless Type Cover

Ampere Rating	Jaws	Service	Bypass	Connections Line	Load	Opening, Hub or Closure Plate	Catalog Number
200	4	UG	—	3/8-inch studs	3/8-inch studs	Solid top	**UTRS240ACH**
200	4	OH/UG	—	3/8-inch studs	3/8-inch studs	3-5/16 hub cover plate	**UTRS2303CCH**
200	4	UG	—	#8–350 kcmil	#8–350 kcmil	Solid top	**UTRS223ACH**
200	4	UG	—	3/8-inch studs	3/8-inch studs	Solid top	**UTRS220ACH**
200	4	OH/UG	—	#8–350 kcmil	#8–350 kcmil	3-5/16 cover plate	**UTRS213CFLCH**
200	4	OH/UG	—	#8–350 kcmil	#8–350 kcmil	3-5/16 hub cover plate	**UTRS213CEPCH**
200	4	OH/UG	—	#6–350 kcmil	#6–350 kcmil	3-5/16 hub cover plate	**UGTRS213CE**
200	4	OH/UG	—	#6–350 kcmil	#6–350 kcmil	3-5/16 hub cover plate	**UTRS213CE**
200	4	OH/UG	—	#6–350 kcmil	#6–350 kcmil	3-5/16 hub opening	**UATRS213BCH**
200	4	OH/UG	—	#6–350 kcmil	#6–350 kcmil	3-5/16 hub opening	**URS213BCH**
200	4	OH/UG	—	#6–350 kcmil	#6–350 kcmil	3-5/16 hub opening	**UTRS213BE**
200	4	UG	—	#8–350 kcmil	#8–350 kcmil	Solid top	**UTRS213AFLCH**
200	4	UG	—	#8–350 kcmil	#8–350 kcmil	Solid top	**UTRS213ACH**
200	4	OH/UG	Horn	#8–350 kcmil	#8–350 kcmil	3-5/16 hub opening	**UTRS2138BCH**
200	4	OH/UG	—	#8–250 kcmil	#8–250 kcmil	Solid top	**UTRS212ACH**
200	4	OH/UG	—	#8–250 kcmil	#8–250 kcmil	3-5/16 cover plate	**UTRS212CCH**
200	4	OH/UG	—	#8–250 kcmil	#8–250 kcmil	3-5/16 cover plate	**UTRS212CFLCH**
200	4	OH/UG	—	#8–250 kcmil	#8–250 kcmil	3-5/16 hub opening	**UTRS212BCH**
200	4	OH	—	#8–250 kcmil	#8–250 kcmil	2-inch bolt-on hub	**UTRS202NCH**
200	4	OH	—	#8–250 kcmil	#8–250 kcmil	Small hub opening	**UATRS202BFLCH** ①
200	4	OH/UG	—	#8–250 kcmil	#8–250 kcmil	3-5/16 cover plate	**UTRS232CCH**
200	4	OH	—	#8–2/0 cu/al	#8–2/0 cu/al	3-5/16 hub opening	**UTRS202BCH**
200	4	OH/UG	—	#8–250 kcmil	#8–250 kcmil	Solid top	**URS212ACH**
200	4	OH	—	#8–250 kcmil	#8–250 kcmil	2-inch bolt-on hub	**URS202NCH**
200	5	OH	Horn	#8–250 kcmil	#8–250 kcmil	3-5/16 hub opening	**URS202BDQCH**
200	4	OH/UG	Horn	#8–350 kcmil	#8–350 kcmil	3-5/16 hub cover plate	**UFHTRS213CCH** ②
200	4	OH/UG	Horn	#8–350 kcmil	#8–350 kcmil	3-5/16 hub opening	**UHTTRS213BCH**
200	4	OH/UG	Horn	#8–350 kcmil	#8–350 kcmil	3-5/16 hub cover plate	**UHTTRS213CCH**
200	4	OH	Horn	#8–250 kcmil	#8–250 kcmil	3-5/16 hub opening	**UHTTRS202BCH**
200	5	OH/UG	Horn	#8–350 kcmil	#8–350 kcmil	3-5/16 hub cover plate	**UHTRS233CCH**
200	4	UG	Horn	#8–350 kcmil	#8–350 kcmil	Solid top	**UHTRS223ARHCH**
200	4	UG	Horn	#8–350 kcmil	#8–350 kcmil	Solid top	**UFHTRS223ACH**
200	5	UG	Horn	#8–350 kcmil	#8–350 kcmil	Solid top	**UGHTRS223ACH**
200	4	UG	Horn	#8–350 kcmil	#8–350 kcmil	Solid top	**UHTTRS223ACH**
200	4	UG	Horn	#8–350 kcmil	#8–350 kcmil	Solid top	**UHTRS223ACH**
200	4	OH/UG	Horn	#6–350 kcmil	#6–350 kcmil	3-5/16 hub opening	**UHTRS213CE**
200	4	OH/UG	Horn	#6–350 kcmil	#6–350 kcmil	3-5/16 hub opening	**UHTRS213BE**
200	4	OH/UG	Horn	#8–350 kcmil	#8–350 kcmil	Solid top	**UHTRS213AE**
200	4	OH	Horn	#8–350 kcmil	#8–350 kcmil	3-5/16 hub opening	**UHTRS203BCH**
200	4	OH	Horn	#8–250 kcmil	#8–250 kcmil	3-5/16 hub opening	**UHTRS202BCH**
200	4	OH/UG	None	#8–250 kcmil	#8–250 kcmil	2-inch bolt-on hub	**URS202NPECCH** ③

Notes

① Aluminum enclosure.
② Barrel lock.
③ PEC approved.

For dimensions, see **Pages V1-T4-8** and **V1-T4-9**.

Residential Ringless Type Cover, continued

Ampere Rating	Jaws	Service	Bypass	Connections Line	Load	Opening, Hub or Closure Plate	Catalog Number
200	4	OH/UG	Horn	#8–350 kcmil	#8–350 kcmil	Solid top	**UHIRS223ACVCH**
200	4	OH/UG	Horn	#8–350 kcmil	#8–350 kcmil	3-5/16 hub opening	**UHIRS213BCVCH**
200	5	OH/UG	—	#6–350 kcmil	#6–350 kcmil	Closure plate	**UGTRS213CE**
200	5	OH/UG	—	#6–350 kcmil	#6–350 kcmil	Hub opening	**UGTRS213BE**
200	5	OH/UG	Horn	#6–350 kcmil	#6–350 kcmil	Closure plate	**786685217918**
200	5	OH/UG	Horn	#6–350 kcmil	#6–350 kcmil	3-5/16 hub opening	**UGHTRS213BE**
200	5	OH/UG	Horn	#8–250 kcmil	#8–250 kcmil	3-5/16 hub cover plate	**UGHRS212CKCCH**
200	4	OH	—	#8–250 kcmil	#8–250 kcmil	3-5/16 hub opening	**UFTRS202BCH**
200	4	OH	Horn	#8–250 kcmil	#8–250 kcmil	3-5/16 hub opening	**UFHTRS202BCH**
200	4	UG	Horn	#8–350 kcmil	#8–350 kcmil	Solid top	**UBHTRS223ARHCH**
200	4	UG	Horn	#8–350 kcmil	#8–350 kcmil	Solid top	**UBHRS223ACH**
200	4	OH	Horn	#8–250 kcmil	#8–250 kcmil	3-5/16 hub cover plate	**UBHRS202BCH**
200	4	OH/UG	—	#8–350 kcmil	#8–350 kcmil	3-5/16 hub opening	**UATRS213CFLCH**
200	4	OH/UG	Horn	#8–350 kcmil	#8–350 kcmil	3-5/16 hub cover plate	**UAHTRS233CSHCH**
200	4	UG	Horn	#8–350 kcmil	#8–350 kcmil	Solid top	**UAHTRS223AFLCH**
200	4	OH	Horn	#8–250 kcmil	#8–250 kcmil	3-5/16 hub opening	**UAHTRS202BFLCH**
200	4	OH/UG	—	#8–350 kcmil	#8–350 kcmil	3-5/16 hub closure plate	**U92197CCCPLCH**
200	4	OH/UG	—	#8–350 kcmil	#8–350 kcmil	3-5/16 hub closure plate	**1009928CH**
200	4	OH/UG	Horn	#8–250 kcmil	#8–250 kcmil	Solid top	**1009874ACH**
200	4	UG	—	3/8-inch studs	3/8-inch studs	Solid top	**1009046CH**
200	4	UG	Horn	#8–350 kcmil	#8–350 kcmil	Solid top	**1008941CH**
200	4	UG	Horn	#8–350 kcmil	#8–350 kcmil	Solid top	**1008940CH**
200	4	UG	Horn	#8–350 kcmil	#8–350 kcmil	Solid top	**1008827CH**
200	4	UG	Horn	#8–350 kcmil	#8–350 kcmil	Solid top	**1008819CH**
200	4	UG	Horn	#8–350 kcmil	#8–350 kcmil	Solid top	**1008717CH**
200	4	UG	—	#8–350 kcmil	#8–350 kcmil	Solid top	**1008617CH**
200	4	OH/UG	Horn	#8–350 kcmil	#8–350 kcmil	3-5/16 hub opening	**1007817CH**
200	4	OH	Horn	#8–250 kcmil	#8–250 kcmil	3-5/16 hub opening	**1007699CH**
200	4	OH	Horn	#8–250 kcmil	#8–250 kcmil	3-5/16 hub opening	**1007665CH**
200	4	UG	Horn	#8–350 kcmil	#8–350 kcmil	Solid top	**1007588CH**
200	4	OH/UG	—	3/8-inch studs	3/8-inch studs	3-5/16 hub opening	**1007448ACH**
200	4	UG	Horn	#8–350 kcmil	#8–350 kcmil	Solid top	**1004884ARHCH** ①
200	4	UG	Horn	#8–350 kcmil	#8–350 kcmil	Solid top	**1004884ACH**
200	4	OH/UG	—	#8–#250 kcmil	#8–#250 kcmil	3-5/16 hub cover plate	**1004710ECH**
200	4	OH	—	N/A	N/A	N/A	**1004709DCH**
200	4	OH	Horn	#8–#250 kcmil	#8–#250 kcmil	2-inch bolt-on hubs	**1004455BCH**
200	4	OH	Horn	#8–250 kcmil	#8–250 kcmil	3-5/16 hub opening	**1004161ACH**
200	4	OH/UG	Horn	#8–350 kcmil	#8–350 kcmil	3-5/16 hub opening	**1004159ACH**
200	4	OH/UG	—	#8–350 kcmil	#8–350 kcmil	Hub closure plate	**1008826ACH** ②
200	4	OH/UG	Lever	#6–350 kcmil	#6–350 kcmil	Hub closure plate	**1006352CCH** ②
200	5	OH	Horn	#8–250 kcmil	#8–250 kcmil	3-5/16 hub opening	**1003879ACH**
200	5	OH/UG	Horn	#8–350 kcmil	#8–350 kcmil	3-5/16 hub opening	**1003878ACH**

Notes

① Right hand incoming.

② Austin Energy approved.

For dimensions, see **Pages V1-T4-8** and **V1-T4-9**.

URS101BCH

Residential Ringless Type Cover, continued

Ampere Rating	Jaws	Service	Bypass	Connections Line	Load	Opening, Hub or Closure Plate	Catalog Number
150	4	OH/UG	—	#8–2/0 AWG	#8–2/0 AWG	Hub closure plate	**1004326DCH** ①
150	4	OH/UG	—	#8–250 kcmil	#8–250 kcmil	Hub opening	**UTRS502BCH**
150	4	OH	—	#8–250 kcmil	#8–250 kcmil	3-5/16 hub opening	**UTRS502BCH**
150	4	OH	—	#8–250 kcmil	#8–250 kcmil	3-5/16 hub cover plate	**UTRS502CCH**
125	4	UG	—	N/A	N/A	N/A	**1006385BCH**
125	4	OH/UG	—	#8–2/0 cu/al	#8–2/0 cu/al	3-5/16 hub opening	**UTRS111BCH**
125	4	OH	—	#8–2/0 cu/al	#8–2/0 cu/al	3-5/16 hub opening	**UBTRS101BCH**
125	4	OH	—	#8–2/0 cu/al	#8–2/0 cu/al	1-1/4-inch bolt-on hub	**UTRS101LCH**
125	4	OH	—	#8–2/0 cu/al	#8–2/0 cu/al	3-5/16 hub cover plate	**UTRS101CE**
125	4	OH	—	#8–2/0 cu/al	#8–2/0 cu/al	3-5/16 hub opening	**UTRS101BE**
125	4	OH	—	#8–2/0	#8–2/0	3-5/16 hub cover plate	**URS101CCPLCH**
125	4	OH	Horn	cu/al with 1/2-inch hex head wire clamping screw	cu/al with 1/2-inch hex head wire clamping screw	3-5/16 hub cover plate	**URS101BDQCH**
125	4	OH	—	#8–2/0	#8–2/0	3-5/16 hub opening	**URS101BCPLCH**
125	4	OH	—	#8–2/0	#8–2/0	3-5/16 hub opening	**URS101BCH**
125	4	OH	Horn	#8–2/0	#8–2/0	3-5/16 hub opening	**UHTTRS101BCH**
125	4	OH/UG	Horn	#8–250 kcmil	#8–250 kcmil	3-5/16 hub opening	**UHTRS111BCH**
125	4	OH	Horn	#8–2/0	#8–2/0	1.25-inch hub mounted	**UHTRS101LCH**
125	4	OH	Horn	#8–2/0	#8–2/0	Closure plate	**UHTRS101CE**
125	4	OH	Horn	#8–2/0	#8–2/0	3-5/16 hub opening	**UHTRS101BE**
125	5	OH/UG	—	#8–2/0	#8–2/0	3-5/16 hub cover plate	**UGRS10101CKCCH**
125	5	OH/UG	—	#8–2/0	#8–2/0	3-5/16 hub cover plate	**UGHTRS111CCH**
125	5	OH	—	#8–2/0	#8–2/0	3-5/16 hub opening	**UGHTRS101BCH**
125	4	OH	—	#8–2/0	#8–2/0	3-5/16 hub cover plate	**UBHRS101BCH**
125	4	OH/UG	—	#8–2/0	#8–2/0	3-5/16 hub cover plate	**UATZRS101CFLCH**
125	4	OH	—	#8–2/0	#8–2/0	3-5/16 hub cover plate	**UATRS101CCH**
125	4	OH	—	#8–2/0	#8–2/0	3-5/16 hub opening	**1008947CH**
125	4	UG	N/A	N/A	N/A	N/A	**1005826ACH**
125	4	OH	—	#8–2/0	#8–2/0	1-1/4-inch bolt-on hub	**1004931BCH**
125	4	OH	—	#8–2/0	#8–2/0	3-5/16 hub opening	**1004162ACH**
125	5	OH	—	#8–2/0	#8–2/0	3-5/16 hub opening	**1003880ACH**
125	4	OH	—	#8–2/0	#8–2/0	3-5/16 hub opening	**UTZRS101BFLCH**
125	4	OH	—	#8–2/0	#8–2/0	3-5/16 hub closure plate	**UTZRS101CFLCH**
125	5	OH	Horn	#8–2/0	#8–2/0	Hub opening	**UTRS101CEPSEG** ②
100	4	OH	—	#8–2/0	#8–2/0	3-5/16 hub opening	**1009079CH**
200	5	OH/UG	Horn	#8–350 kcmil	#8–350 kcmil	Hub closure plate	**UTRS213CEPSEG** ②

Notes

① Austin Energy approved.

② PSE&G approved.

For dimensions, see **Pages V1-T4-8** and **V1-T4-9**.

Residential Ring Type Cover

Ampere Rating	Jaws	Service	Connections Line	Load	Opening, Hub or Closure Plate	Catalog Number
200	4	UG	#8–350 kcmil	#8–350 kcmil	Solid top	**URTRS223ACH**
200	4	OH/UG	#8–350 kcmil	#8–350 kcmil	3-5/16 hub cover plate	**URRS213CCH**
200	4	OH/UG	#8–350 kcmil	#8–350 kcmil	2 inch hub mounted	**URTRS213NEUSCH**
200	4	OH/UG	#8–350 kcmil	#8–350 kcmil	3-5/16 hub cover plate	**URTRS213CEUSCH**
200	4	OH/UG	#8–350 kcmil	#8–350 kcmil	3-5/16 hub cover plate	**1009424CH**
200	4	OH/UG	#8–350 kcmil	#8–350 kcmil	Knockouts	**1009449CH**
200	4	OH	#8–350 kcmil	#8–350 kcmil	3-5/16 hub opening	**URSTRS203BCH**
200	4	OH	#8–250 kcmil	#8–250 kcmil	3-5/16 hub cover plate	**URS212BCRCH**
200	4	OH/UG	#8–250 kcmil	#8–250 kcmil	3-5/16 hub cover plate	**URTRS202BCH**
200	4	OH	#8–250 kcmil	#8–250 kcmil	3-5/16 hub opening	**URTRS213BE**
200	4	OH/UG	#6–350 kcmil	#6–350 kcmil	Hub opening	**URTRS202BCH**
200	4	OH/UG	#6–350 kcmil	#6–350 kcmil	Closure plate	**URTRS213CE**
200	4	UG	#6–350 kcmil	#6–350 kcmil	3-5/16 hub opening	**URTRS213BEUSCH**
200	4	OH	#8–250 kcmil	#8–250 kcmil	2-inch hub mounted	**URTRS202NEUSCH**
200	4	OH	#8–250 kcmil	#8–250 kcmil	3-5/16 hub opening	**UNRRS202BEUSCH**
200	4	OH/UG	#6–350 kcmil	#6–350 kcmil	Closure plate	**UNRRS213CEUSE**
200	4	OH	#8–250 kcmil	#8–250 kcmil	Hub opening	**UNRRS213BEUSE**
200	4	UG	#6–350 kcmil	#6–350 kcmil	Solid top	**UNRRS213AEUSE**
200	4	OH/UG	#6–250 kcmil	#6–250 kcmil	5x5 hub opening 3-5/16 adapter plate	**1009097CH**
125	4	OH	#8–2/0 cu/al	#8–2/0 cu/al	3-5/16 hub opening	**URS101BCRCH**
125	4	OH	#8–2/0 cu/al	#8–2/0 cu/al	1-1/4-inch bolt-on hub	**URRS101LCH**
125	4	OH	#8–2/0 cu/al	#8–2/0 cu/al	Hub cover plate	**URTRS101BE**
125	4	OH	#8–2/0 cu/al	#8–2/0 cu/al	Hub cover plate	**URTRS101CE**
125	4	OH	#8–2/0 cu/al	#8–2/0 cu/al	3-5/16 hub cover plate	**UNRRS101BEUSE**
125	4	OH	#8–2/0 cu/al	#8–2/0 cu/al	Closure plate	**UNRRS101CEUSE**
125	4	OH/UG	#8–2/0 cu/al	#8–2/0 cu/al	3-5/16 hub cover plate	**UNRRS111BEUSE**
125	4	UG	#8–2/0 cu/al	#8–2/0 cu/al	Solid top	**UNRRS111AEUSE**
125	4	OH	#8–2/0 cu/al	#8–2/0 cu/al	3-5/16 hub opening	**URSTRS101BCH**

Note

For dimensions, see **Pages V1-T4-8** and **V1-T4-9**.

Dimensions

Approximate Dimensions in Inches (mm)

Residential Ringless Type Cover

Catalog Number	Height	Width	Depth
UTRS240ACH	18.63 (473.2)	13.00 (330.2)	4.94 (125.5)
UTRS2303CCH	20.00 (508.0)	13.00 (330.2)	4.94 (125.5)
UTRS223ACH	13.00 (330.2)	13.00 (330.2)	4.94 (125.5)
UTRS220ACH	15.13 (384.3)	13.00 (330.2)	4.94 (125.5)
UTRS213CFLCH	15.00 (381.0)	11.00 (279.4)	4.37 (111.0)
UTRS213CEPCH	15.00 (381.0)	11.00 (279.4)	4.37 (111.0)
UGTRS213CE	15.13 (384.3)	11.25 (285.8)	4.50 (114.3)
UTRS213CE	15.13 (384.3)	11.25 (285.8)	4.50 (114.3)
UATRS213BCH	15.13 (384.3)	11.25 (285.8)	4.50 (114.3)
URS213BCH	15.00 (381.0)	11.00 (279.4)	4.36 (110.7)
UTRS213BE	15.13 (384.3)	11.25 (285.8)	4.50 (114.3)
UTRS213AFLCH	15.00 (381.0)	11.00 (279.4)	4.37 (111.0)
UTRS213ACH	15.00 (381.0)	11.00 (279.4)	4.36 (110.7)
UTRS2138BCH	20.00 (508.0)	13.00 (330.2)	4.94 (125.5)
UTRS212ACH	14.00 (355.6)	11.00 (279.4)	4.37 (111.0)
UTRS212CCH	14.00 (355.6)	11.00 (279.4)	4.36 (110.7)
UTRS212CFLCH	14.00 (355.6)	11.00 (279.4)	4.36 (110.7)
UTRS212BCH	14.00 (355.6)	11.00 (279.4)	4.36 (110.7)
UTRS202NCH	14.00 (355.6)	8.00 (203.2)	4.36 (110.7)
UATRS202BFLCH ①	14.00 (355.6)	8.00 (203.2)	4.36 (110.7)
UTRS232CCH	17.12 (434.8)	13.00 (330.2)	4.93 (125.2)
UTRS202BCH	14.00 (355.6)	8.00 (203.2)	4.36 (110.7)
URS212ACH	14.00 (355.6)	11.00 (279.4)	4.38 (111.3)
URS202NCH	14.00 (355.6)	8.00 (203.2)	4.38 (111.3)
URS202BDQCH	14.00 (355.6)	8.00 (203.2)	4.38 (111.3)
UFHTRS213CCH ②	15.00 (381.0)	11.00 (279.4)	4.38 (111.3)
UHTTRS213BCH	15.00 (381.0)	11.00 (279.4)	4.38 (111.3)
UHTTRS213CCH	15.00 (381.0)	11.00 (279.4)	4.38 (111.3)
UHTTRS202BCH	14.00 (355.6)	8.00 (203.2)	4.38 (111.3)
UHTRS233CCH	17.13 (435.1)	13.00 (330.2)	4.94 (125.5)
UHTRS223ARHCH	13.00 (330.2)	13.00 (330.2)	4.94 (125.5)
UFHTRS223ACH	13.00 (330.2)	13.00 (330.2)	4.94 (125.5)
UGHTRS223ACH	13.00 (330.2)	13.00 (330.2)	4.94 (125.5)
UHTTRS223ACH	13.00 (330.2)	13.00 (330.2)	4.94 (125.5)
UHTRS223ACH	13.00 (330.2)	13.00 (330.2)	4.94 (125.5)
UHTRS213CE	15.00 (381.0)	11.00 (279.4)	4.38 (111.3)
UHTRS213BE	15.00 (381.0)	11.00 (279.4)	4.38 (111.3)
UHTRS213AE	15.00 (381.0)	11.00 (279.4)	4.38 (111.3)
UHTRS203BCH	15.00 (381.0)	8.00 (203.2)	4.38 (111.3)
UHTRS202BCH	14.00 (355.6)	8.00 (203.2)	4.38 (111.3)
UHIRS223ACVCH	13.00 (330.2)	13.00 (330.2)	4.94 (125.5)

Residential Ringless Type Cover, continued

Catalog Number	Height	Width	Depth
UHIRS213BCVCH	15.00 (381.0)	11.00 (279.4)	4.38 (111.3)
UGTRS213CE	15.13 (384.3)	11.25 (285.8)	4.50 (114.3)
UGTRS213BE	15.13 (384.3)	11.25 (285.8)	4.50 (114.3)
786685217918	15.13 (384.3)	11.25 (285.8)	4.50 (114.3)
UGHTRS213BE	15.13 (384.3)	11.25 (285.8)	4.50 (114.3)
UGHRS212CKCCH	14.00 (355.6)	11.00 (279.4)	4.38 (111.3)
UFTRS202BCH	14.00 (355.6)	8.00 (203.2)	4.38 (111.3)
UFHTRS202BCH	14.00 (355.6)	8.00 (203.2)	4.38 (111.3)
UBHTRS223ARHCH	13.00 (330.2)	13.00 (330.2)	4.94 (125.5)
UBHRS223ACH	13.00 (330.2)	13.00 (330.2)	4.94 (125.5)
UBHRS202BCH	14.00 (355.6)	8.00 (203.2)	4.38 (111.3)
UATRS213CFLCH	15.00 (381.0)	11.00 (279.4)	4.38 (111.3)
UAHTRS233CSHCH	17.13 (435.1)	13.00 (330.2)	4.94 (125.5)
UAHTRS223AFLCH	13.00 (330.2)	13.00 (330.2)	4.94 (125.5)
UAHTRS202BFLCH	14.00 (355.6)	8.00 (203.2)	4.38 (111.3)
U92197CCCPLCH	14.13 (358.9)	13.00 (330.2)	4.94 (125.5)
1009928CH	15.00 (381.0)	11.00 (279.4)	4.38 (111.3)
1009874ACH	15.00 (381.0)	13.00 (330.2)	4.94 (125.5)
1009046CH	20.75 (527.1)	9.00 (228.6)	4.94 (125.5)
1008941CH	17.13 (435.1)	13.00 (330.2)	4.94 (125.5)
1008940CH	17.13 (435.1)	13.00 (330.2)	4.94 (125.5)
1008827CH	13.00 (330.2)	13.00 (330.2)	4.94 (125.5)
1008819CH	13.00 (330.2)	13.00 (330.2)	4.94 (125.5)
1008717CH	15.00 (381.0)	13.00 (330.2)	4.94 (125.5)
1008617CH	15.00 (381.0)	13.00 (330.2)	4.94 (125.5)
1007817CH	15.00 (381.0)	11.00 (279.4)	4.38 (111.3)
1007699CH	14.00 (355.6)	8.00 (203.2)	4.38 (111.3)
1007665CH	14.00 (355.6)	8.00 (203.2)	4.38 (111.3)
1007588CH	13.00 (330.2)	13.00 (330.2)	4.94 (125.5)
1007448ACH	19.00 (482.6)	11.00 (279.4)	4.38 (111.3)
1004884ARHCH ③	13.00 (330.2)	13.00 (330.2)	4.93 (125.2)
1004884ACH	13.00 (330.2)	13.00 (330.2)	4.93 (125.2)
1004710ECH	14.00 (355.6)	11.00 (279.4)	4.38 (111.3)
1004709DCH	N/A	N/A	N/A
1004455BCH	15.00 (381.0)	8.00 (203.2)	4.38 (111.3)
1004161ACH	14.00 (355.6)	8.00 (203.2)	4.38 (111.3)
1004159ACH	15.00 (381.0)	11.00 (279.4)	4.38 (111.3)
1003879ACH	15.00 (381.0)	8.00 (203.2)	4.38 (111.3)
1003878ACH	15.00 (381.0)	11.00 (279.4)	4.38 (111.3)
UTRS502BCH	14.00 (355.6)	8.00 (203.2)	4.38 (111.3)

Notes

① Aluminum enclosure.
② Barrel lock.
③ Right hand incoming.

Approximate Dimensions in Inches (mm)

Residential Ringless Type Cover, continued

Catalog Number	Height	Width	Depth
UTRS502BCH	14.00 (355.6)	8.00 (203.2)	4.36 (110.7)
UTRS502CCH	14.00 (355.6)	8.00 (203.2)	4.36 (110.7)
1006385BCH	N/A	N/A	N/A
UTRS111BCH	14.00 (355.6)	11.00 (279.4)	4.36 (110.7)
UBTRS101BCH	10.88 (276.4)	8.00 (203.2)	3.50 (88.9)
UTRS101LCH	10.88 (276.4)	8.00 (203.2)	3.50 (88.9)
UTRS101CE	11.05 (280.7)	8.22 (208.8)	3.61 (91.7)
UTRS101BE	11.05 (280.7)	8.22 (208.8)	3.61 (91.7)
URS101CCPLCH	10.88 (276.4)	8.00 (203.2)	3.50 (88.9)
URS101BDQCH	10.88 (276.4)	8.00 (203.2)	3.50 (88.9)
URS101BCPLCH	10.88 (276.4)	8.00 (203.2)	3.50 (88.9)
URS101BCH	10.88 (276.4)	8.00 (203.2)	3.50 (88.9)
UHTTRS101BCH	10.88 (276.4)	8.00 (203.2)	3.50 (88.9)
UHTRS111BCH	14.00 (355.6)	11.00 (279.4)	4.38 (111.3)
UHTRS101LCH	10.88 (276.4)	8.00 (203.2)	3.50 (88.9)
UHTRS101CE	11.05 (280.7)	8.22 (208.8)	3.61 (91.7)
UHTRS101BE	11.05 (280.7)	8.22 (208.8)	3.61 (91.7)
UGRS10101CKCCH	12.00 (304.8)	8.00 (203.2)	3.50 (88.9)
UGHTRS111CCH	14.00 (355.6)	11.00 (279.4)	4.36 (110.7)
UGHTRS101BCH	10.88 (276.4)	8.00 (203.2)	3.50 (88.9)
UBHRS101BCH	10.88 (276.4)	8.00 (203.2)	3.50 (88.9)
UATZRS101CFLCH	10.88 (276.4)	8.00 (203.2)	3.50 (88.9)
UATRS101CCH	10.87 (276.1)	8.00 (203.2)	3.50 (88.9)
1008947CH	10.89 (276.6)	8.00 (203.2)	3.50 (88.9)
1005826ACH	N/A	N/A	N/A
1004931BCH	10.88 (276.4)	8.00 (203.2)	3.50 (88.9)
1004162ACH	10.89 (276.6)	8.00 (203.2)	3.50 (88.9)
1003880ACH	10.89 (276.6)	8.00 (203.2)	3.50 (88.9)
UTZRS101BFLCH	N/A	N/A	N/A
UTZRS101CFLCH	N/A	N/A	N/A
1009079CH	23.75 (603.3)	8.00 (203.2)	3.48 (88.4)

Residential Ring Type Cover

Catalog Number	Height	Width	Depth
URTRS223ACH	13.00 (330.2)	13.00 (330.2)	4.93 (125.2)
URRS213CCH	15.00 (381.0)	11.00 (279.4)	4.38 (111.3)
URTRS213NEUSCH	15.00 (381.0)	11.00 (279.4)	4.38 (111.3)
URTRS213CEUSCH	15.00 (381.0)	11.00 (279.4)	4.38 (111.3)
1009424CH	15.00 (381.0)	11.00 (279.4)	4.38 (111.3)
1009449CH	18.31 (465.1)	14.19 (360.4)	5.13 (130.3)
URSTRS203BCH	N/A	N/A	N/A
URS212BCRCH	14.00 (355.6)	8.00 (203.2)	4.38 (111.3)
URTRS202BCH	14.00 (355.6)	11.00 (279.4)	4.38 (111.3)
URTRS213BE	14.00 (355.6)	8.00 (203.2)	4.50 (114.3)
URTRS202BCH	15.13 (384.3)	11.25 (285.8)	4.50 (114.3)
URTRS213CE	15.13 (384.3)	11.25 (285.8)	4.50 (114.3)
URTRS213BEUSCH	15.13 (384.3)	11.25 (285.8)	4.50 (114.3)
URTRS202NEUSCH	14.00 (355.6)	8.00 (203.2)	4.38 (111.3)
UNRRS202BEUSCH	14.00 (355.6)	8.00 (203.2)	4.38 (111.3)
UNRRS213CEUSE	15.13 (384.3)	11.25 (285.8)	4.50 (114.3)
UNRRS213BEUSE	15.13 (384.3)	11.25 (285.8)	4.50 (114.3)
UNRRS213AEUSE	15.13 (384.3)	11.25 (285.8)	4.50 (114.3)
1009097CH	19.00 (482.6)	13.00 (330.2)	5.25 (133.4)
URS101BCRCH	10.88 (276.4)	8.00 (203.2)	3.50 (88.9)
URRS101LCH	10.88 (276.4)	8.00 (203.2)	3.50 (88.9)
URTRS101BE	11.00 (279.4)	8.25 (209.6)	3.63 (92.2)
URTRS101CE	11.00 (279.4)	8.25 (209.6)	3.63 (92.2)
UNRRS101BEUSE	10.88 (276.4)	8.00 (203.2)	3.50 (88.9)
UNRRS101CEUSE	10.88 (276.4)	8.00 (203.2)	3.50 (88.9)
UNRRS111BEUSE	14.00 (355.6)	11.00 (279.4)	4.38 (111.3)
URSTRS101BCH	10.88 (276.4)	8.00 (203.2)	3.50 (88.9)

Commercial Lever Bypass Sockets

Contents

Description	*Page*
Catalog Number Selection	**V1-T4-11**
Product Selection	**V1-T4-12**
Dimensions	**V1-T4-16**

Product Description

- Heavy-duty, lever bypass, jaw clamping ringless meter socket design
- 200 A and 320 A styles available
- Single-phase or three-phase
- 4, 5 or 7 terminal available
- 600 Vac maximum rating
- Multiple service design offerings

Standards and Certifications

- UL 414 listed and recognized

Listed

Catalog Number Selection

Single Meter Sockets H Group

UT H 4 2 0 3 B CH

Note: The "U" prefix is always used first followed by other prefixes required in alphabetical order.

Standard Prefixes	
A	= Aluminum enclosure
B	= Barrel lock provision, for an exposed INNER-TITE or Brooks barrel lock; unit includes an internal lock receiver bracket
F	= Barrel Lock with guard provision, for a lock guard INNER-TITE or Brooks barrel lock; unit includes an internal lock receiver bracket
G	= Grounded fifth terminal (9 o'clock position)
H	= Horn bypass
I	= Inhibitor installed in wire connectors
M	= Temporary meter cover (waxed cardboard)
N	= No sealing ring (applies only to ring style sockets)
R	= Ring style socket
S	= Aluminum screw type sealing ring (applies only to ring style sockets)
T	= Grounding connector (#14–#2 Cu) for triplex ground
TT	= Two grounding connectors (#14–#2 Cu) for quadplex ground
U	= UL label
Z	= 5/16-inch hex head connector screw in place of slotted (100 A only)

Product Group	
RS	= Residential service, single position
2R-6R	= Residential service, multiple position
2H-6H	= Commercial or residential service, multiple position
H	= Commercial or residential service, single position

Jaw Quantity
4 = 4 terminals
5 = 5 terminals
7 = 7 terminals

Ampere Rating
2 = 200 A
3 = 320 A

Service Design
0 = Overhead
1 = Combination overhead/underground
2 = Underground, side wired
3 = Combination overhead/underground, side wired

Maximum Conductor (Line & Load)
0 = 0.38-inch stud connectors
3 = #350 kcmil connectors
5 = #500 kcmil connectors
6 = #600 kcmil connectors
7 = #750 kcmil connectors
8 = Dual #250 kcmil connectors
9 = Dual #350 kcmil connectors

Standard Suffixes	
A	= Solid top
B	= Small hub opening
C	= Small hub closing plate mounted
L	= 1.25-inch (31.8 mm) hub mounted
M	= 1.50-inch (38.1 mm) hub mounted
N	= 2.00-inch (50.8 mm) hub mounted
P	= 2.50-inch (63.5 mm) hub mounted
T	= Large hub opening hub
U	= Large hub cover plate hub mounted
V	= 2.50-inch (63.5 mm) large hub mounted
Q	= 3.00-inch (76.2 mm) large hub mounted
R	= 3.50-inch (88.9 mm) large hub mounted
S	= 4.00-inch (101.6 mm) large hub mounted
Z	= Large to small hub adapter mounted

Product Selection

Commercial Lever Bypass

Ampere Rating	Jaws	Service	Bypass	Connections Line	Load	Opening, Hub or Closure Plate	Catalog Number
320	7	OH/UG	Lever	#4-600 kcmil	#4–600 kcmil	5x5 hub opening	**UTTH7336TCH**
320	7	OH	Lever	#600 kcmil	Dual #6–350	5x5 hub opening	**UTH73069THLCH**
320	7	OH/UG	Lever	#14–1/0 cu/al	#6–350 kcmil	5x5 hub cover plate	**UTH73369UHLCH**
320	7	OH/UG	Lever	#14–1/0 cu/al	#6–350 kcmil	5x5 hub opening	**UTH73369THLCH**
320	7	OH/UG	Lever	3/8-inch studs	3/8-inch studs	5x5 hub cover plate	**UFTH7330UCH**
320	7	OH/UG	Lever	#600 kcmil	#600 kcmil	5x5 hub opening	**UTH7336TCH**
320	7	OH/UG	Lever	3/8-inch studs	3/8-inch studs	5x5 hub cover plate	**UTH7330UCH**
320	7	OH/UG	Lever	3/8-inch studs	3/8-inch studs	5x5 hub cover plate	**UTH7330UFLCH**
320	7	OH/UG	Lever	3/8-inch studs	3/8-inch studs	5x5 hub cover plate	**UATH7330UFLCH** ①
320	7	OH/UG	Lever	3/8-inch studs	3/8-inch studs	5x5 hub opening	**UH7330TCPLCH**
320	7	OH/UG	Lever	3/8-inch studs	3/8-inch studs	5x5 hub opening	**UTH7330TCH**
320	7	OH/UG	Lever	3/8-inch studs	3/8-inch studs	5x5 hub-inch opening	**UTTH7330TCH**
320	7	OH/UG	Lever	3/8-inch studs	3/8-inch studs	5x5 hub cover plate	**UH7300UCPLCH**
320	7	OH/UG	Lever	3/8-inch studs	3/8-inch studs	5x5 hub cover plate	**UTH7300UCH**
320	7	OH/UG	Lever	3/8-inch studs	3/8-inch studs	5x5 hub opening	**UTH7300TCH**
320	7	OH/UG	Lever	#6–350 kcmil	#6–350 kcmil	Hub closure plate	**1006353CCH** ②
320	5	OH/UG	Lever	3/8-inch studs	3/8-inch studs	5x5 hub cover plate	**UTH5330UFLCH**
320	5	OH/UG	Lever	3/8-inch studs	3/8-inch studs	5x5 hub cover plate	**UTH5330UCH**
320	5	OH	Lever	3/8-inch studs	3/8-inch studs	5x5 hub opening	**UTH5300TCH**
320	5	OH/UG	Lever	3/8-inch studs	3/8-inch studs	5x5 hub cover plate	**UATH5330UFLCH**
320	4	OH/UG	lever	#4–600 kcmil	#4–600 kcmil	Hub closure plate	**1010468CH** ②
320	4	UG	Lever	3/8-inch studs	3/8-inch studs	Solid top	**UTH4320ACH**
320	4	UG	Lever	3/8-inch studs	Dual #6–350	Solid top	**UTH43209ACH**
320	4	OH/UG	Lever	#6–350 kcmil	#6–350 kcmil	5x5 hub cover plate	**UTH4339UCH**
320	4	OH/UG	Lever	#6–250 kcmil	#6–250 kcmil	5x5 hub cover plate	**UTH4338UCH**
320	4	OH/UG	Lever	#4–600 kcmil	#4–600 kcmil	5x5 hub cover plate	**UTH4336UCH**
320	4	OH/UG	Lever	#4–600 kcmil	#4–600 kcmil	5x5 hub opening	**UTH4336TCH**
320	4	OH/UG	Lever	#4–600 kcmil	#6–350 kcmil	5x5 hub cover plate	**UTH43369UCH**
320	4	OH/UG	Lever	#4–600 kcmil	#6–350 kcmil	5x5 hub opening	**UTH43369TCH**
320	4	OH/UG	Lever	3/8-inch studs	3/8-inch studs	3-5/16 hub cover plate	**UTTH4330UCH**
320	4	OH/UG	Lever	3/8-inch studs	3/8-inch studs	3-5/16 hub cover plate	**UTH4330UCH**
320	4	OH/UG	Lever	3/8-inch studs	3/8-inch studs	5x5 hub opening	**UBTH4330TCH**
320	4	OH/UG	Lever	3/8-inch studs	3/8-inch studs	5x5 hub opening	**UTH4330TCH**
320	4	OH/UG	Lever	3/8-inch studs	3/8-inch studs	5x5 cover plate	**UTH4300UCH**
320	4	OH/UG	Lever	3/8-inch studs	3/8-inch studs	5x5 hub opening	**UTH4300TCH**
320	5	OH/UG	Lever	3/8-inch studs	3/8-inch studs	5x5 hub cover plate	**UH5300UKCCH**
320	4	OH/UG	Lever	#6–250 kcmil	#4–600 kcmil	5x5 hub cover plate	**UH43168UCPLCH**
320	4	OH/UG	Lever	#4–600 kcmil	#6–250 kcmil	5x5 hub cover plate	**UH43068TCPLCH**
320	5	OH/UG	Lever	3/8-inch studs	3/8-inch studs	5x5 hub cover plate	**UGTH4330UCH**
320	5	OH/UG	Lever	3/8-inch studs	3/8-inch studs	5x5 hub opening	**UGTH4330TCH**
320	7	OH/UG	Lever	3/8-inch studs	3/8-inch studs	5x5 hub opening	**UFTH7330TCH**
320	4	OH/UG	Lever	3/8-inch studs	3/8-inch studs	5x5 hub opening	**UFTH4330TCH**

Notes

① Aluminum enclosure.

② Austin Energy approved.

For dimensions, see **Pages V1-T4-16** and **V1-T4-17**.

Commercial Lever Bypass, continued

Ampere Rating	Jaws	Service	Bypass	Connections Line	Load	Opening, Hub or Closure Plate	Catalog Number
320	7	OH/UG	Lever	#4–600 kcmil	#4–600 kcmil	5x5 hub opening	**UATH7336TCH**
320	5	OH/UG	Lever	3/8-inch studs	3/8-inch studs	5x5 hub cover plate	**UATH5330UFLCH**
320	4	OH/UG	Lever	#4–600 kcmil	#4–600 kcmil	5x5 hub opening	**UATH4336TCH**
320	4	OH/UG	Lever	3/8-inch studs	3/8-inch studs	5x5 hub opening	**UATH4330TCH**
320	4	OH/UG	Lever	3/8-inch studs	3/8-inch studs	5x5 hub cover plate	**1009788CH**
320	4	OH/UG	Lever	3/8-inch studs	3/8-inch studs	5x5 hub cover plate	**1009788ACH** ①
320	4	OH/UG	Lever	Dual #6–350	Dual #6–350	(2) 5x5 hub cover plates	**1009760ACH**
320	4	OH/UG	Lever	Dual #6–350	Dual #6–350	5x5 hub cover plate	**1009722CH**
320	4	OH/UG	Lever	3/8-inch studs	3/8-inch studs	5x5 hub cover plate	**782116975945**
320	4	OH/UG	Lever	3/8-inch studs	3/8-inch studs	5x5 hub cover plate	**1009260CH**
320	7	OH/UG	Lever	#4–600 kcmil/Dual 1/0–250 kcmil cu/al	#4–600 kcmil/Dual 1/0–250 kcmil cu/al	5x5 hub opening	**1009181CH**
320	4	UG	Lever	#6–350 kcmil	#6–350 kcmil	Solid top	**1009018CH**
320	4	OH/UG	Lever	3/8-inch studs	3/8-inch studs	5x5 hub opening	**1008950CH**
320	4	OH/UG	Lever	3/8-inch studs	3/8-inch studs	5x5 hub opening	**1008948CH**
320	4	UG	Lever	3/8-inch studs	3/8-inch studs	Solid top	**1008848CH**
320	4	OH/UG	Lever	3/8-inch studs	3/8-inch studs	5x5 hub opening	**1008837CH**
320	4	OH/UG	Lever	3/8-inch studs	3/8-inch studs	5x5 hub opening	**1008836CH**
320	7	OH/UG	Lever	3/8-inch studs	3/8-inch studs	5x5 hub opening	**1008798CH**
320	4	OH/UG	Lever	3/8-inch studs	3/8-inch studs	5x5 hub opening	**1008793CH**
320	5	OH/UG	Lever	3/8-inch studs	3/8-inch studs	5x5 hub opening	**1008792CH**
320	7	OH/UG	Lever	#4–600 kcmil/Dual 1/0–250 kcmil cu/al	#4–600 kcmil/Dual 1/0–250 kcmil cu/al	5x5 hub opening	**1008543CH**
320	4	OH/UG	Lever	#4–600 kcmil cu/al	#4–600 kcmil cu/al	5x5 hub opening	**1008541CH**
320	4	UG	Lever	N/A	N/A	Solid top	**1008540CH**
320	4	OH/UG	Lever	#4–600 kcmil cu/al	#4–600 kcmil cu/al	Solid top	**1008435CH**
320	4	OH/UG	Lever	3/8-inch studs	3/8-inch studs	5x5 hub opening	**1008191CH**
320	4	OH/UG	Lever	#6–350 kcmil	#6–350 kcmil	5x5 hub opening	**1008068CH**
320	4	OH/UG	Lever	N/A	N/A	N/A	**1007818CH**
320	4	OH/UG	Lever	3/8-inch studs	3/8-inch studs	5x5 hub opening	**1007801CH**
320	4	OH/UG	Lever	3/8-inch studs	3/8-inch studs	5x5 hub opening	**1007672CH**
320	4	OH/UG	Lever	#6–350 kcmil	#6–350 kcmil	5x5 hub opening	**1006344ACH**
320	4	OH/UG	Lever	TBD	TBD	5x5 hub opening	**1004984ACH**
320	4	OH/UG	N/A	#4–600 kcmil	#4–600 kcmil	3-inch bolt-on hub	**1004771BCH**
200	7	OH/UG	Lever	3/8-inch studs	3/8-inch studs	N/A	**UBTH7230ACH**
200	7	OH/UG	Lever	#6–350 kcmil	#6–350 kcmil	5x5 hub cover plate	**UTH7233UCH**

Notes

① Bolted in shield.

For dimensions, see **Pages V1-T4-16** and **V1-T4-17**.

Commercial Lever Bypass, continued

Ampere Rating	Jaws	Service	Bypass	Connections Line	Load	Opening, Hub or Closure Plate	Catalog Number
200	7	OH/UG	Lever	#6–350 kcmil	#6–350 kcmil	5x5 hub cover plate	**UTE7213UFLCH**
200	7	OH/UG	Lever	#6–350 kcmil	#6–350 kcmil	3-5/16 hub cover plate	**UETH72137UCH**
200	7	OH/UG	Lever	#6–350 kcmil	#6–350 kcmil	3-5/16 hub cover plate	**UTE7213UCH**
200	7	OH/UG	Lever	#6–350 kcmil	#6–350 kcmil	5x5 hub opening	**UTE7213THLCH**
200	7	OH/UG	Lever	#6–350 kcmil	#6–350 kcmil	5x5 hub opening	**UBHRS212BCH**
200	7	OH/UG	Lever	#6–350 kcmil	#6–350 kcmil	5x5 hub opening	**UBEH7213TCH**
200	7	OH/UG	Lever	#6–350 kcmil	#6–350 kcmil	5x5 hub opening	**UFTE7213TCH** ①
200	7	OH/UG	Lever	#6–350 kcmil	#6–350 kcmil	Large to small hub adapter	**UTE7213ZCH**
200	7	OH/UG	Lever	#6–350 kcmil	#6–350 kcmil	5x5 hub opening	**UTE7213TCH**
200	7	OH/UG	Lever	#6–350 kcmil	#6–350 kcmil	3-5/16 hub cover plate	**UTE7213CFLCH**
200	7	OH/UG	Lever	#6–350 kcmil	#6–350 kcmil	3-5/16 hub cover plate	**UTE7213CCH**
200	7	OH/UG	Lever	#6–350 kcmil	#6–350 kcmil	3-5/16 hub opening	**UBTE7213BCH**
200	7	OH/UG	Lever	#6–350 kcmil	#6–350 kcmil	3-5/16 hub opening	**UTE7213BCH**
200	7	OH/UG	Lever	3/8-inch studs	3/8-inch studs	5x5 hub cover plate	**UTE7210UCH**
200	7	OH	Lever	#6–350 kcmil	#6–350 kcmil	5x5 hub opening	**UTE7203TCH**
200	7	OH	Lever	#6–350 kcmil	#6–350 kcmil	3-5/16 hub opening	**UTE7203BCH**
200	5	OH/UG	Lever	#6–350 kcmil	#6–350 kcmil	5x5 hub cover plate	**UETH5213UCH**
200	5	OH/UG	Lever	#6–350 kcmil	#6–350 kcmil	5x5 hub opening	**UTE5213TCH**
200	5	OH/UG	Lever	#6–350 kcmil	#6–350 kcmil	5x5 hub opening	**UTTE5213TCH**
200	5	OH/UG	Lever	#6–350 kcmil	#6–350 kcmil	3-5/16 hub cover plate	**UTE5213CCH**
200	5	OH/UG	Lever	#6–350 kcmil	#6–350 kcmil	3-5/16 hub opening	**UTE5213BNDCH**
200	5	OH/UG	Lever	#6–350 kcmil	#6–350 kcmil	Large to small hub adapter	**UTE5213ZCH**
200	5	OH/UG	Lever	#6–350 kcmil	#6–350 kcmil	5x5 hub cover plate	**UTE5213UFLCH**
200	5	OH/UG	Lever	#6–350 kcmil	#6–350 kcmil	3-5/16 hub cover plate	**UTE5213CFLCH**
200	5	OH/UG	Lever	#6–350 kcmil	#6–350 kcmil	3-5/16 hub opening	**UTE5213BCH**
200	5	OH/UG	Lever	3/8-inch studs	3/8-inch studs	3-5/16 hub cover plate	**UTE5210CCH**
200	5	OH	Lever	#6–350 kcmil	#6–350 kcmil	3-5/16 hub opening	**UTE5203BCH**
200	4	OH/UG	Lever	#6–350 kcmil	#6–350 kcmil	5x5 hub opening with adapter plate	**UTE4213ZCH**
200	5	OH/UG	Lever	#6–350 kcmil	#6–350 kcmil	5x5 hub cover plate	**UGTE4213CCH**
200	4	OH/UG	Lever	#6–350 kcmil	#6–350 kcmil	5x5 hub opening	**UTE4213TCH**
200	4	OH/UG	Lever	#6–350 kcmil	#6–350 kcmil	5x5 hub cover plate	**UTTE4213UCH** ②
200	4	OH/UG	Lever	#6–350 kcmil	#6–350 kcmil	5x5 hub cover plate	**UTE4213CCH**
200	4	OH/UG	Lever	#6–350 kcmil	#6–350 kcmil	3-5/16 hub opening	**UTE4213BCH**
200	4	OH	Lever	#6–350 kcmil	#6–350 kcmil	3-5/16 hub opening	**UTE4203BCH**
200	7	OH/UG	Lever	#6–350 kcmil	#6–350 kcmil	5x5 hub cover plate	**UIH7213UCVCH**
200	7	OH/UG	Lever	#6–350 kcmil	#6–350 kcmil	3-5/16 hub cover plate	**UE7213CCCCH**
200	7	OH/UG	Lever	#6–350 kcmil	#6–350 kcmil	3-5/16 hub cover plate	**UE7213CCPLCH**
200	7	OH/UG	Lever	#6–350 kcmil	#6–350 kcmil	3-5/16 hub opening	**UE7213BCPLCH**

Notes

① Barrel lock.

② TT = quadplex ground.

For dimensions, see **Pages V1-T4-16** and **V1-T4-17**.

Commercial Lever Bypass, continued

Ampere Rating	Jaws	Service	Bypass	Connections Line	Load	Opening, Hub or Closure Plate	Catalog Number
200	5	OH/UG	Lever	#6–350 kcmil	#6–350 kcmil	3-5/16 hub opening	**UGTE4213BCH**
200	4	OH/UG	Lever	#6–350 kcmil	#6–350 kcmil	3-5/16 hub cover plate	**UGE4213CCCCH**
200	7	OH/UG	Lever	#6–350 kcmil	#6–350 kcmil	3-5/16 hub opening	**UFTE7213BCH**
200	7	OH/UG	Lever	#6–350 kcmil	#6–350 kcmil	5x5 hub opening	**UATE7213TCH**
200	5	OH/UG	Lever	#6–350 kcmil	#6–350 kcmil	3-5/16 hub cover plate	**UATE5213CCH**
200	4	OH/UG	Lever	#6–350 kcmil	#6–350 kcmil	5x5 hub cover plate	**UATE4213UFLCH**
200	5	OH	Lever	#6–350 kcmil	#6–350 kcmil	3-5/16 hub opening	**UBGTE4203BCH**
200	7	UG	Lever	4/0 compression line	#6–350 kcmil cu/al load	Solid top	**1009845ECH**
200	5	OH/UG	Lever	#6–350 kcmil	#6–350 kcmil	3-5/16 hub cover plate	**1008801ECH**
200	5	OH/UG	Lever	3/8-inch studs	3/8-inch studs	3-5/16 hub cover plate	**1008832ECH**
200	4	UG	Lever	#6–350 kcmil	#6–350 kcmil	Solid top	**1007944ECH**
200	7	OH/UG	Lever	#6–350 kcmil cu/al	#6–350 kcmil cu/al	5x5 hub opening	**1007670ECH**
200	7	OH/UG	Lever	#6–350 kcmil	#6–350 kcmil	5x5 hub opening	**UTTE7213TCH**

Note

For dimensions, see **Pages V1-T4-16** and **V1-T4-17**.

Dimensions

Approximate Dimensions in Inches (mm)

Commercial Lever Bypass

Catalog Number	Height	Width	Depth
UTTH7336TCH	39.89 (1013.2)	20.00 (508.0)	6.50 (165.1)
UTH73069THLCH	N/A	N/A	N/A
UTH73369UHLCH	39.89 (1013.2)	20.00 (508.0)	6.50 (165.1)
UTH73369THLCH	39.89 (1013.2)	20.00 (508.0)	6.50 (165.1)
UFTH7330UCH	39.89 (1013.2)	20.00 (508.0)	6.50 (165.1)
UTH7336TCH	39.89 (1013.2)	20.00 (508.0)	6.50 (165.1)
UTH7330UCH	39.89 (1013.2)	20.00 (508.0)	6.50 (165.1)
UTH7330UFLCH	39.89 (1013.2)	20.00 (508.0)	6.50 (165.1)
UATH7330UFLCH ①	39.89 (1013.2)	20.00 (508.0)	6.50 (165.1)
UH7330TCPLCH	39.89 (1013.2)	20.00 (508.0)	6.50 (165.1)
UTH7330TCH	39.89 (1013.2)	20.00 (508.0)	6.50 (165.1)
UTTH7330TCH	39.89 (1013.2)	20.00 (508.0)	6.50 (165.1)
UH7300UCPLCH	39.89 (1013.2)	20.00 (508.0)	6.50 (165.1)
UTH7300UCH	39.89 (1013.2)	20.00 (508.0)	6.50 (165.1)
UTH7300TCH	34.50 (876.3)	15.00 (381.0)	5.63 (143.0)
UTH5330UFLCH	39.88 (1013.0)	20.00 (508.0)	6.50 (165.1)
UTH5330UCH	39.88 (1013.0)	20.00 (508.0)	6.50 (165.1)
UTH5300TCH	39.88 (1013.0)	20.00 (508.0)	6.50 (165.1)
UATH5330UFLCH	39.88 (1013.0)	20.00 (508.0)	6.50 (165.1)
UTH4320ACH	26.00 (660.4)	15.00 (381.0)	5.68 (144.3)
UTH43209ACH	N/A	N/A	N/A
UTH4339UCH	36.63 (930.4)	15.00 (381.0)	5.69 (144.5)
UTH4338UCH	29.00 (736.6)	15.00 (381.0)	5.69 (144.5)
UTH4336UCH	36.63 (930.4)	15.00 (381.0)	5.69 (144.5)
UTH4336TCH	36.63 (930.4)	15.00 (381.0)	5.69 (144.5)
UTH43369UCH	36.63 (930.4)	15.00 (381.0)	5.69 (144.5)
UTH43369TCH	36.63 (930.4)	15.00 (381.0)	5.69 (144.5)
UTTH4330UCH	36.63 (930.4)	15.00 (381.0)	5.69 (144.5)
UTH4330UCH	36.63 (930.4)	15.00 (381.0)	5.69 (144.5)
UBTH4330TCH	36.63 (930.4)	15.00 (381.0)	5.69 (144.5)
UTH4330TCH	36.63 (930.4)	15.00 (381.0)	5.69 (144.5)
UTH4300UCH	34.50 (876.3)	13.00 (330.2)	4.94 (125.5)
UTH4300TCH	34.50 (876.3)	13.00 (330.2)	4.94 (125.5)
UH5300UKCCH	34.50 (876.3)	13.00 (330.2)	4.94 (125.5)
UH43168UCPLCH	34.50 (876.3)	15.00 (381.0)	5.69 (144.5)
UH43068TCPLCH	34.50 (876.3)	13.00 (330.2)	4.94 (125.5)
UGTH4330UCH	36.63 (930.4)	15.00 (381.0)	5.69 (144.5)
UGTH4330TCH	36.63 (930.4)	15.00 (381.0)	5.69 (144.5)
UFTH7330TCH	39.88 (1013.0)	20.00 (508.0)	6.50 (165.1)
UFTH4330TCH	36.63 (930.4)	15.00 (381.0)	5.69 (144.5)

Commercial Lever Bypass, continued

Catalog Number	Height	Width	Depth
UATH7336TCH	39.88 (1013.0)	20.00 (508.0)	6.50 (165.1)
UATH5330UFLCH	39.88 (1013.0)	20.00 (508.0)	6.50 (165.1)
UATH4336TCH	36.63 (930.4)	15.00 (381.0)	5.69 (144.5)
UATH4330TCH	36.63 (930.4)	15.00 (381.0)	5.69 (144.5)
1009788CH	34.50 (876.3)	13.00 (330.2)	4.94 (125.5)
1009788ACH ②	34.50 (876.3)	13.00 (330.2)	4.94 (125.5)
1009760ACH	36.63 (930.4)	15.00 (381.0)	5.68 (144.3)
1009722CH	36.63 (930.4)	15.00 (381.0)	5.68 (144.3)
782116975945	36.63 (930.4)	15.00 (381.0)	5.69 (144.5)
1009260CH	36.63 (930.4)	15.00 (381.0)	5.69 (144.5)
1009181CH	34.50 (876.3)	15.00 (381.0)	5.69 (144.5)
1009018CH	63.00 (1600.2)	12.97 (329.4)	4.94 (125.5)
1008950CH	39.88 (1013.0)	20.00 (508.0)	6.50 (165.1)
1008948CH	36.63 (930.4)	15.00 (381.0)	5.69 (144.5)
1008848CH	58.00 (1473.2)	12.97 (329.4)	4.94 (125.5)
1008837CH	36.63 (930.4)	15.00 (381.0)	6.50 (165.1)
1008836CH	36.63 (930.4)	15.00 (381.0)	6.50 (165.1)
1008798CH	34.50 (876.3)	15.00 (381.0)	5.69 (144.5)
1008793CH	34.50 (876.3)	13.00 (330.2)	4.94 (125.5)
1008792CH	34.50 (876.3)	13.00 (330.2)	4.94 (125.5)
1008543CH	39.89 (1013.2)	20.00 (508.0)	6.60 (167.6)
1008541CH	36.63 (930.4)	15.00 (381.0)	5.69 (144.5)
1008540CH	N/A	N/A	N/A
1008435CH	26.00 (660.4)	15.00 (381.0)	5.69 (144.5)
1008191CH	36.63 (930.4)	15.00 (381.0)	5.69 (144.5)
1008068CH	34.50 (876.3)	16.44 (417.6)	6.50 (165.1)
1007818CH	N/A	N/A	N/A
1007801CH	28.50 (723.9)	18.00 (457.2)	5.69 (144.5)
1007672CH	36.63 (930.4)	15.00 (381.0)	5.69 (144.5)
1006344ACH	28.50 (723.9)	18.00 (457.2)	5.69 (144.5)
1004984ACH	36.63 (930.4)	15.00 (381.0)	5.69 (144.5)
1004771BCH	36.62 (930.1)	15.00 (381.0)	5.68 (144.3)
UBTH7230ACH	N/A	N/A	N/A
UTH7233UCH	27.00 (685.8)	16.00 (406.4)	5.63 (143.0)

Notes

① Aluminum enclosure.
② Bolted in shield.

Approximate Dimensions in Inches (mm)

Commercial Lever Bypass, continued

Catalog Number	Height	Width	Depth
UTE7213UFLCH	19.00 (482.6)	13.00 (330.2)	4.94 (125.5)
UETH72137UCH	19.00 (482.6)	13.00 (330.2)	4.94 (125.5)
UTE7213UCH	19.00 (482.6)	13.00 (330.2)	4.94 (125.5)
UTE7213THLCH	19.00 (482.6)	13.00 (330.2)	4.94 (125.5)
UBHRS212BCH	19.00 (482.6)	13.00 (330.2)	4.94 (125.5)
UBEH7213TCH	19.00 (482.6)	13.00 (330.2)	4.94 (125.5)
UFTE7213TCH ①	19.00 (482.6)	13.00 (330.2)	4.94 (125.5)
UTE7213ZCH	19.00 (482.6)	13.00 (330.2)	4.94 (125.5)
UTE7213TCH	19.00 (482.6)	13.00 (330.2)	4.94 (125.5)
UTE7213CFLCH	19.00 (482.6)	13.00 (330.2)	4.94 (125.5)
UTE7213CCH	19.00 (482.6)	13.00 (330.2)	4.94 (125.5)
UBTE7213BCH	19.00 (482.6)	13.00 (330.2)	4.94 (125.5)
UTE7213BCH	19.00 (482.6)	13.00 (330.2)	4.94 (125.5)
UTE7210UCH	24.69 (627.1)	13.00 (330.2)	4.94 (125.5)
UTE7203TCH	19.00 (482.6)	10.50 (266.7)	4.94 (125.5)
UTE7203BCH	19.00 (482.6)	10.50 (266.7)	4.94 (125.5)
UETH5213UCH	19.00 (482.6)	13.00 (330.2)	4.94 (125.5)
UTE5213TCH	19.00 (482.6)	13.00 (330.2)	4.94 (125.5)
UTTE5213TCH	19.00 (482.6)	13.00 (330.2)	4.94 (125.5)
UTE5213CCH	19.00 (482.6)	13.00 (330.2)	4.94 (125.5)
UTE5213BNDCH	19.00 (482.6)	13.00 (330.2)	4.94 (125.5)
UTE5213ZCH	19.00 (482.6)	13.00 (330.2)	4.94 (125.5)
UTE5213UFLCH	19.00 (482.6)	13.00 (330.2)	4.94 (125.5)
UTE5213CFLCH	19.00 (482.6)	13.00 (330.2)	4.94 (125.5)
UTE5213BCH	19.00 (482.6)	13.00 (330.2)	4.94 (125.5)
UTE5210CCH	20.13 (511.3)	13.00 (330.2)	4.94 (125.5)
UTE5203BCH	19.00 (482.6)	10.50 (266.7)	4.94 (125.5)
UTE4213ZCH	19.00 (482.6)	13.00 (330.2)	4.94 (125.5)
UGTE4213CCH	19.00 (482.6)	13.00 (330.2)	4.94 (125.5)
UTE4213TCH	19.00 (482.6)	13.00 (330.2)	4.94 (125.5)
UTTE4213UCH ②	19.00 (482.6)	13.00 (330.2)	4.94 (125.5)
UTE4213CCH	19.00 (482.6)	13.00 (330.2)	4.94 (125.5)
UTE4213BCH	19.00 (482.6)	13.00 (330.2)	4.94 (125.5)
UTE4203BCH	19.00 (482.6)	10.50 (266.7)	4.94 (125.5)
UIH7213UCVCH	19.00 (482.6)	13.00 (330.2)	4.94 (125.5)
UE7213CCCCH	19.00 (482.6)	13.00 (330.2)	4.94 (125.5)
UE7213CCPLCH	19.00 (482.6)	13.00 (330.2)	4.94 (125.5)
UE7213BCPLCH	19.00 (482.6)	13.00 (330.2)	4.94 (125.5)

Commercial Lever Bypass, continued

Catalog Number	Height	Width	Depth
UGTE4213BCH	19.00 (482.6)	13.00 (330.2)	4.94 (125.5)
UGE4213CCCCH	19.00 (482.6)	13.00 (330.2)	4.94 (125.5)
UFTE7213BCH	19.00 (482.6)	13.00 (330.2)	4.94 (125.5)
UATE7213TCH	19.00 (482.6)	13.00 (330.2)	4.94 (125.5)
UATE5213CCH	19.00 (482.6)	13.00 (330.2)	4.94 (125.5)
UATE4213UFLCH	19.00 (482.6)	13.00 (330.2)	4.94 (125.5)
UBGTE4203BCH	19.00 (482.6)	10.50 (266.7)	4.94 (125.5)
1009845ECH	64.00 (1625.6)	11.00 (279.4)	6.00 (152.4)
1008801ECH	19.00 (482.6)	13.00 (330.2)	4.94 (125.5)
1008832ECH	24.69 (627.1)	13.00 (330.2)	4.94 (125.5)
1007944ECH	22.00 (558.8)	16.00 (406.4)	5.69 (144.5)
1007670ECH	19.00 (482.6)	13.00 (330.2)	4.94 (125.5)
UTTE7213TCH	19.00 (482.6)	13.00 (330.2)	4.94 (125.5)

Notes

① Barrel lock.

② TT = quadplex ground.

Multiple Position Horizontal Ganged Sockets

Contents

Description	*Page*
Catalog Number Selection	**V1-T4-19**
Product Selection	**V1-T4-20**
Dimensions	**V1-T4-23**

Product Description

- Available in 100 A and 200 A designs
- Available in 2-position through 6-position designs
- Multiple service design offerings
- Multiple line/load lug configurations
- Residential or lever bypass socket designs
- Multiple hub opening and closure plate sizes available

Catalog Number Selection

Single Meter Sockets 2R-6R and 2H-6H Group

UT 2R 1 1 2 1 B CH

Note: The "U" prefix is always used first followed by other prefixes required in alphabetical order.

Standard Prefixes

- **A** = Aluminum enclosure
- **B** = Barrel lock provision, for an exposed INNER-TITE or Brooks barrel lock; unit includes an internal lock receiver bracket
- **F** = Barrel lock with guard provision, for a lock guard INNER-TITE or Brooks barrel lock; unit includes an internal lock receiver bracket
- **G** = Grounded fifth terminal (9 o'clock position)
- **H** = Horn bypass
- **I** = Inhibitor installed in wire connectors
- **M** = Temporary meter cover (waxed cardboard)
- **N** = No sealing ring (applies only to ring style sockets)
- **R** = Ring style socket
- **S** = Aluminum screw type sealing ring (applies only to ring style sockets)
- **T** = Grounding connector (#14–#2 Cu) for triplex ground
- **TT** = Two grounding connectors (#14–#2 Cu) for quadplex ground
- **U** = UL label
- **Z** = 5/16-inch hex head connector screw in place of slotted (100 A only)

Product Group

- **RS** = Residential service, single position
- **2R-6R** = Residential service, multiple position
- **2H-6H** = Commercial or residential service, multiple position
- **H** = Commercial or residential service, single position

Ampere Rating

- **1** = 100 A
- **2** = 200 A

Service Design

- **0** = Overhead
- **1** = Combination overhead/underground
- **2** = Underground, side wired
- **3** = Combination overhead/underground, side wired
- **4** = End feed

Maximum Line Conductor

- **0** = 0.38-inch stud connectors
- **1** = #2/0 connectors
- **2** = #250 kcmil connectors
- **3** = #350 kcmil connectors
- **5** = #500 kcmil connectors
- **6** = #600 kcmil connectors
- **7** = #750 kcmil connectors
- **8** = Dual #500 kcmil connectors

Maximum Load Conductor

- **0** = 0.38-inch stud connectors
- **1** = #2/0 connectors
- **2** = #250 kcmil connectors
- **3** = #350 kcmil connectors
- **5** = #500 kcmil connectors
- **6** = #600 kcmil connectors
- **7** = #750 kcmil connectors
- **8** = Dual #500 kcmil connectors

Standard Suffixes

- **A** = Solid top
- **B** = Small hub opening
- **C** = Small hub closing plate mounted
- **L** = 1.25-inch (31.8 mm) hub mounted
- **M** = 1.50-inch (38.1 mm) hub mounted
- **N** = 2.00-inch (50.8 mm) hub mounted
- **P** = 2.50-inch (63.5 mm) hub mounted
- **T** = Large hub opening hub
- **U** = Large hub cover plate hub mounted
- **V** = 2.50-inch (63.5 mm) large hub mounted
- **Q** = 3.00-inch (76.2 mm) large hub mounted
- **R** = 3.50-inch (88.9 mm) large hub mounted
- **S** = 4.00-inch (101.6 mm) large hub mounted
- **Z** = Large to small hub adapter mounted

Product Selection

UT2R2332BCH

Horizontal Design—Multi Position Ringless

Ampere Rating	Jaws	Position	Service	Bypass	Connections Line	Load	Opening, Hub or Closure Plate	Catalog Number
200	4	2	OH/UG	Horn	#6–350 kcmil	#8–250 kcmil	5x5 hub opening	**1004401BCH**
200	4	3	OH/UG	Horn	#6–350 kcmil	#8–250 kcmil	5x5 hub opening	**1004404BCH**
200	5	2	OH/UG	Horn	#6–350 kcmil	#8–250 kcmil	5x5 hub opening	**1004418ACH**
200	4	2	OH/UG	—	3/8-inch stud	#8–250 kcmil	5x5 hub cover plate	**1006737BCH**
200	4	2	OH/UG	Horn	3/8-inch stud	#8–250 kcmil	5x5 hub opening	**1007700CH**
200	4	3	OH/UG	Horn	3/8-inch stud	#8–250 kcmil	Hub opening	**1007701CH**
200	4	2	OH/UG	Horn	#6–350 kcmil	#8–250 kcmil	5x5 hub cover plate	**1008842CH**
200	4	3	OH/UG	Horn	1/0–500 kcmil cu/al	#8–250 kcmil	5x5 hub cover plate	**1008843CH**
200	4	4	OH/UG	Horn	1/0–500 kcmil cu/al	#8–250 kcmil	5x5 hub cover plate	**1008844CH**
200	4	2	OH/UG	Horn	#6–350 kcmil	#8–250 kcmil	5x5 hub cover plate	**1008958CH**
200	4	3	OH/UG	Horn	1/0–500 kcmil cu/al	#8–250 kcmil	5x5 hub cover plate	**1008959CH**
200	4	4	OH/UG	Horn	1/0–500 kcmil cu/al	#8–250 kcmil	5x5 hub cover plate	**1008960CH**
200	4	5	OH/UG	Horn	(2) 1/0–500 kcmil cu/al	#8–250 kcmil	(2) 5x5 hub cover plate	**1009579ACH**
200	4	4	OH/UG	Horn	1/0–500 kcmil cu/al	#8–250 kcmil	5x5 hub opening	**U4R2352TDQCH**
200	4	5	OH/UG	Horn	(2) 1/0–500 kcmil cu/al	#8–250 kcmil	(2) 5x5 hub opening	**U5R2392TTDQCH**
200	4	6	OH/UG	Horn	(2) 1/0–500 kcmil cu/al	#8–250 kcmil	5x5 hub opening (2) places	**U6R2392TTDQCH**
200	4	4	OH/UG	Horn	1/0–500 kcmil cu/al	#8–250 kcmil	5x5 hub opening	**UBH4R2352TCH**
200	4	2	OH/UG	Horn	#6–350 kcmil	#8–250 kcmil	5x5 hub opening	**UBH2R2332TCH**
200	4	3	OH/UG	Horn	#6–350 kcmil	#8–250 kcmil	5x5 hub opening	**UBH3R2332TCH**
200	4	4	OH/UG	Horn	3/8-inch stud	#8–250 kcmil	5x5 hub cover plate	**UEHT4R2302UCH**
200	4	3	OH/UG	Horn	3/8-inch stud	#8–250 kcmil	5x5 hub cover plate	**UEHT3R2302UCH**
200	4	2	OH/UG	Horn	3/8-inch stud	#8–250 kcmil	5x5 hub cover plate	**UEHT2R2302UCH**
200	4	2	UG	Horn	#6–350 kcmil	#8–250 kcmil	Solid top	**UHI2R2332ACVCH**
200	4	2	OH/UG	Horn	#6–350 kcmil	#8–250 kcmil	Hub opening	**UHI2R2332TCVCH**
200	4	4	UG	Horn	1/0–500 kcmil cu/al	#8–250 kcmil	Solid top	**UHI4R2352ACVCH**
200	4	2	OH/UG	Horn	#6–350 kcmil	#8–250 kcmil	5x5 hub cover plate	**UHTT2R2332UCH**
200	4	2	OH/UG	Horn	#6–350 kcmil	#8–250 kcmil	5x5 hub opening	**UHT2R2332TCH**
200	4	3	OH/UG	Horn	#6–350 kcmil	#8–250 kcmil	5x5 hub opening	**UHT3R2332TCH**
200	4	3	OH/UG	Horn	1/0–500 kcmil cu/al	#8–250 kcmil	5x5 hub cover plate	**UHT3R2352UCH**
200	4	4	OH/UG	Horn	1/0–500 kcmil cu/al	#8–250 kcmil	5x5 hub opening	**UHT4R2352TCH**
200	4	4	OH/UG	—	1/0–500 kcmil cu/al	#8–250 kcmil	5x5 hub cover plate	**UT4R2352UFLCH**
200	4	4	OH/UG	Horn	1/0–500 kcmil cu/al	#8–250 kcmil	5x5 hub cover plate	**UHT4R2352UCH**
200	5	2	OH/UG	Lever	1/0–500 kcmil cu/al	#6–350 kcmil	5x5 hub opening	**UT2H52353TCH**
200	4	2	OH/UG	Horn	#6–350 kcmil	#8–250 kcmil	5x5 hub cover plate	**UHT2R2332UCH**
200	4	2	OH/UG	—	#6–350 kcmil	#8–250 kcmil	3-5/16 hub opening	**UT2R2332BCH**
200	4	2	OH/UG	—	#6–350 kcmil	#8–250 kcmil	5x5 hub opening	**UAT2R2332TCH** ①
200	4	2	OH/UG	—	#6–350 kcmil	#8–250 kcmil	5x5 hub opening	**UT2R2332TCH**
200	4	2	OH/UG	—	#6–350 kcmil	#8–250 kcmil	5x5 hub opening	**U2R2332TCPLCH**
200	4	2	OH/UG	—	#6–350 kcmil	#8–250 kcmil	5x5 hub cover plate	**U2R2332UCPLCH**
200	4	2	OH/UG	Horn	#6–350 kcmil	#8–250 kcmil	5x5 hub opening	**U2R2332TDQCH**
200	4	2	OH/UG	—	#6–350 kcmil	#8–250 kcmil	5x5 hub cover plate	**UT2R2332UCH**
200	4	3	OH/UG	Horn	#6–350 kcmil	#8–250 kcmil	Large 5X5 hub opening	**U3R2332TDQCH**

Notes

① Aluminum enclosure.

For dimensions, see **Pages V1-T4-23** and **V1-T4-24**.

UT2R1121BCH

Horizontal Design—Multi Position Ringless, continued

Ampere Rating	Jaws	Position	Service	Bypass	Connections Line	Load	Opening, Hub or Closure Plate	Catalog Number
200	4	3	OH/UG	Lever	1/0–500 kcmil cu/al	#6–350 kcmil	5x5 hub opening	**UT3H42353TCH**
200	5	3	OH/UG	Lever	1/0–500 kcmil cu/al	#6–350 kcmil	5x5 hub opening	**UT3H52353TCH**
200	7	3	OH/UG	Lever	1/0–500 kcmil cu/al	#6–350 kcmil	5x5 hub cover plate	**UT3H72353UHLCH**
200	4	3	OH/UG	—	#6–350 kcmil	#8–250 kcmil	5x5 hub opening	**UT3R2332TCH**
200	4	3	OH/UG	—	#6–350 kcmil	#8–250 kcmil	5x5 hub cover plate	**UT3R2332UCH**
200	4	3	OH/UG	—	1/0–500 kcmil cu/al	#8–250 kcmil	5x5 hub opening	**UT3R2352TCH**
200	4	4	OH/UG	—	1/0–500 kcmil cu/al	#8–250 kcmil	5x5 hub opening	**UT4R2352TCH**
200	4	5	OH/UG	Horn	(2) 1/0–500 kcmil cu/al	#8–250 kcmil	5x5 hub opening (in two places)	**UHT5R2392TTCH**
200	4	5	OH/UG	—	(2) 1/0–500 kcmil cu/al	#8–250 kcmil	5x5 hub opening (in two places)	**UT5R2392TTCH**
200	7	5	OH/UG	Lever	Dual 1/0–500 kcmil	#6–350 kcmil	(2) 5X5 hub closure plates	**UT5H72393UUHLCH**
200	4	6	OH/UG	Horn	(2) 1/0–500 kcmil cu/al	#8–250 kcmil	5x5 hub opening (in two places)	**UHT6R2392TTCH**
200	4	6	OH/UG	—	(2) 1/0–500 kcmil cu/al	#8–250 kcmil	5x5 hub opening (in two places)	**UT6R2392TTCH**
200	4	6	OH/UG	—	(2) 1/0–500 kcmil cu/al	#8–250 kcmil	5x5 closure plate (in two places)	**UT6R2392UUFLCH**
200	7	6	OH/UG	Lever	Dual 1/0–500 kcmil	#6–350 kcmil	5x5 closure plate (in two places)	**UT6H72393UUHLCH**
200	4	6	OH/UG	Horn	(2) 1/0–500 kcmil cu/al	#8–250 kcmil	5x5 hub opening (in two places)	**UHT6R2392TTCH**
150	4	2	OH/UG	Horn	#6–350 kcmil	#8–250 kcmil	3-5/16 hub opening	**U2R5432BDQCH**
150	4	5	OH/UG	—	#6–350 kcmil	#8–250 kcmil	3-5/16 hub opening (in two places)	**UT5R5632BCH**
100	4	6	OH/UG	—	#6–350 kcmil	#8–2/0 cu/al	3-5/16 hub opening	**UT6R1131BCH**
100	4	2	OH/UG	Horn	#6–250 kcmil	#8–2/0 cu/al	5x5 hub opening	**1004426ACH**
100	4	2	OH/UG	Horn	#6–250 kcmil	#8–2/0 cu/al	3-5/16 hub opening	**1008951CH**
100	4	3	OH/UG	Horn	#6–250 kcmil	#8–2/0 cu/al	3-5/16 hub opening	**1008952CH**
100	4	2	OH/UG	Horn	#6–250 kcmil	#8–2/0 cu/al	3-5/16 hub cover plate	**1009693CH**
100	4	3	OH/UG	Horn	#6–250 kcmil	#8–2/0 cu/al	3-5/16 hub cover plate	**1009694CH**
100	4	4	OH/UG	Horn	#6–250 kcmil	#8–2/0 cu/al	3-5/16 hub cover plate	**1009695CH**
100	4	5	OH/UG	Horn	#6–250 kcmil	#8–2/0 cu/al	3-5/16 hub cover plate	**1009696CH**
100	4	6	OH/UG	—	#6–350 kcmil	#8–2/0 cu/al	3-5/16 hub cover plate	**UATZ6R1131CFLCH** ①
100	4	2	OH/UG	Horn	#6–250 kcmil	#8–2/0 cu/al	3-5/16 hub opening	**UBH2R1121BCH**
100	4	3	OH/UG	Horn	#6–250 kcmil	#8–2/0 cu/al	3-5/16 hub opening	**UBH3R1121BCH**
100	4	4	OH/UG	Horn	#6–250 kcmil	#8–2/0 cu/al	3-5/16 hub opening	**UBH4R1121BCH**
100	4	2	OH/UG	Horn	#6–250 kcmil	#8–2/0 cu/al	3-5/16 hub opening	**UHT2R1121BCH**
100	4	4	OH/UG	—	#6–250 kcmil	#8–2/0 cu/al	3-5/16 hub opening	**UT4R1121BCH**
100	4	4	OH/UG	—	#6–250 kcmil	#8–2/0 cu/al	3-5/16 closure plate	**UT4R1121CCH**
100	4	4	OH/UG	Horn	#6–250 kcmil	#8–2/0 cu/al	3-5/16 hub opening	**UHT4R1121BCH**
100	4	5	OH/UG	Horn	#6–250 kcmil	#8–2/0 cu/al	3-5/16 hub opening	**UHT5R1121BCH**
100	4	5	OH/UG	—	#6–250 kcmil	#8–2/0 cu/al	3-5/16 hub opening	**UT5R1121BCH**
100	4	5	OH/UG	—	#6–250 kcmil	#8–2/0 cu/al	3-5/16 closure plate	**UT5R1121CCH**
100	4	2	OH/UG	—	#6–250 kcmil	#8–2/0 cu/al	3-5/16 hub opening	**UT2R1121BCH**
100	4	2	OH/UG	—	#6–250 kcmil	#8–2/0 cu/al	3-5/16 closure plate	**UT2R1121CCH**
100	4	2	OH/UG	Horn	#6–250 kcmil	#8–2/0 cu/al	3-5/16 closure plate	**UHT2R1421CCH**
100	4	2	OH/UG	—	#6–250 kcmil	#8–2/0 cu/al	3-5/16 hub opening 3-5/16 hub cover plate	**UT2R1421BCH**
100	4	3	OH/UG	Horn	#6–250 kcmil	#8–2/0 cu/al	3-5/16 hub opening	**UHT3R1121BCH**
100	4	3	OH/UG	—	#6–250 kcmil	#8–2/0 cu/al	3-5/16 hub opening	**UT3R1121BCH**

Notes

① Aluminum enclosure.

For dimensions, see **Pages V1-T4-23** and **V1-T4-24**.

Horizontal Design—Multi Position Ring Type

Ampere Rating	Jaws	Position	Service	Bypass	Connections Line	Load	Opening, Hub or Closure Plate	Catalog Number
200	4	2	OH/UG	—	1/0–500 kcmil cu/al	#8–250 kcmil	5x5 hub opening	**U2R2352TCRCH**
200	4	2	OH/UG	—	#6–350 kcmil	#8–250 kcmil	5x5 hub cover plate	**URT2R2332UCH**
200	5	4	OH/UG	—	1/0–500 kcmil cu/al	#8–250 kcmil	Large 5x5 hub opening	**U4R2352TCRCH**
125	5	2	OH	—	#8–350 kcmil	#8–2/0 cu/al	Hub opening	**U2V1031BCRCH** ①
125	5	3	OH	—	#8–350 kcmil	#8–2/0 cu/al	Hub opening	**U3V1031BCRCH** ①
100	5	2	OH/UG	—	#6–250 kcmil	#8–2/0 cu/al	3-5/16 opening	**U2R1121BCRCH**
100	5	3	OH/UG	—	#6–250 kcmil	#8–2/0 cu/al	3-5/16 opening	**U3R1121BCRCH**
100	5	4	OH/UG	—	#6–250 kcmil	#8–2/0 cu/al	3-5/16 opening	**U4R1121BCRCH**
100	5	5	OH/UG	—	#6–250 kcmil	#8–2/0 cu/al	3-5/16 opening	**U5R1121BCRCH**

Notes

① Vertical gang.

For dimensions, see **Pages V1-T4-23** and **V1-T4-24**.

Dimensions

Approximate Dimensions in Inches (mm)

Horizontal Design—Multi Position Ringless

Catalog Number	Height	Width	Depth
1004401BCH	14.13 (358.9)	24.31 (617.5)	5.38 (136.7)
1004404BCH	14.13 (358.9)	32.47 (824.7)	5.38 (136.7)
1004418ACH	14.13 (358.9)	24.31 (617.5)	5.38 (136.7)
1006737BCH	14.13 (358.9)	24.31 (617.5)	5.38 (136.7)
1007700CH	14.13 (358.9)	24.31 (617.5)	5.38 (136.7)
1007701CH	14.13 (358.9)	32.47 (824.7)	5.38 (136.7)
1008842CH	14.13 (358.9)	24.31 (617.5)	5.38 (136.7)
1008843CH	14.13 (358.9)	32.47 (824.7)	5.38 (136.7)
1008844CH	14.13 (358.9)	40.63 (1032.0)	5.38 (136.7)
1008958CH	14.13 (358.9)	24.31 (617.5)	5.38 (136.7)
1008959CH	14.13 (358.9)	32.47 (824.7)	5.38 (136.7)
1008960CH	14.13 (358.9)	40.63 (1032.0)	5.38 (136.7)
1009579ACH	14.13 (358.9)	54.78 (1391.4)	5.38 (136.7)
U4R2352TDQCH	14.13 (358.9)	40.63 (1032.0)	5.38 (136.7)
U5R2392TTDQCH	14.13 (358.9)	62.94 (1598.7)	5.38 (136.7)
U6R2392TTDQCH	14.13 (358.9)	62.94 (1598.7)	5.38 (136.7)
UBH4R2352TCH	14.13 (358.9)	40.63 (1032.0)	5.38 (136.7)
UBH2R2332TCH	14.13 (358.9)	24.31 (617.5)	5.38 (136.7)
UBH3R2332TCH	14.13 (358.9)	32.47 (824.7)	5.38 (136.7)
UEHT4R2302UCH	14.13 (358.9)	40.63 (1032.0)	5.38 (136.7)
UEHT3R2302UCH	14.13 (358.9)	32.47 (824.7)	5.38 (136.7)
UEHT2R2302UCH	14.13 (358.9)	24.31 (617.5)	5.38 (136.7)
UHI2R2332ACVCH	14.13 (358.9)	24.31 (617.5)	5.38 (136.7)
UHI2R2332TCVCH	14.13 (358.9)	24.31 (617.5)	5.38 (136.7)
UHI4R2352ACVCH	14.13 (358.9)	40.63 (1032.0)	5.38 (136.7)
UHTT2R2332UCH	14.13 (358.9)	24.31 (617.5)	5.38 (136.7)
UHT2R2332TCH	14.13 (358.9)	24.31 (617.5)	5.38 (136.7)
UHT3R2332TCH	14.13 (358.9)	32.94 (836.7)	5.38 (136.7)
UHT3R2352UCH	14.13 (358.9)	32.47 (824.7)	5.38 (136.7)
UHT4R2352TCH	14.13 (358.9)	40.63 (1032.0)	5.38 (136.7)
UT4R2352UFLCH	14.13 (358.9)	40.63 (1032.0)	5.38 (136.7)
UHT4R2352UCH	14.13 (358.9)	40.63 (1032.0)	5.38 (136.7)
UT2H52353TCH	23.56 (598.4)	32.78 (832.6)	6.00 (152.4)
UHT2R2332UCH	14.13 (358.9)	24.31 (617.5)	5.38 (136.7)
UT2R2332BCH	14.13 (358.9)	24.31 (617.5)	5.38 (136.7)
UAT2R2332TCH ①	14.13 (358.9)	24.31 (617.5)	5.38 (136.7)
UT2R2332TCH	14.13 (358.9)	24.31 (617.5)	5.38 (136.7)
U2R2332TCPLCH	14.13 (358.9)	24.31 (617.5)	5.38 (136.7)
U2R2332UCPLCH	14.13 (358.9)	24.31 (617.5)	5.38 (136.7)
U2R2332TDQCH	14.13 (358.9)	24.31 (617.5)	5.38 (136.7)
UT2R2332UCH	14.13 (358.9)	24.31 (617.5)	5.38 (136.7)
U3R2332TDQCH	14.13 (358.9)	32.47 (824.7)	5.38 (136.7)
UT3H42353TCH	23.56 (598.4)	43.91 (1115.3)	6.00 (152.4)
UT3H52353TCH	23.56 (598.4)	43.91 (1115.3)	6.00 (152.4)
UT3H72353UHLCH	23.56 (598.4)	43.91 (1115.3)	5.38 (136.7)

Horizontal Design—Multi Position Ringless, continued

Catalog Number	Height	Width	Depth
UT3R2332TCH	14.13 (358.9)	32.47 (824.7)	5.38 (136.7)
UT3R2332UCH	14.13 (358.9)	32.47 (824.7)	5.38 (136.7)
UT3R2352TCH	14.13 (358.9)	40.63 (1032.0)	5.38 (136.7)
UT4R2352TCH	14.13 (358.9)	40.63 (1032.0)	5.38 (136.7)
UHT5R2392TTCH	14.13 (358.9)	54.78 (1391.4)	5.38 (136.7)
UT5R2392TTCH	14.13 (358.9)	54.78 (1391.4)	5.38 (136.7)
UT5H72393UUHLCH	29.56 (750.8)	72.15 (1832.6)	6.00 (152.4)
UHT6R2392TTCH	14.13 (358.9)	62.94 (1598.7)	5.38 (136.7)
UT6R2392TTCH	14.13 (358.9)	62.94 (1598.7)	5.38 (136.7)
UT6R2392UUFLCH	14.13 (358.9)	62.94 (1598.7)	5.38 (136.7)
UT6H72393UUHLCH	23.56 (598.4)	83.28 (2115.3)	6.00 (152.4)
UHT6R2392TTCH	14.13 (358.9)	62.94 (1598.7)	5.38 (136.7)
U2R5432BDQCH	14.13 (358.9)	20.16 (512.1)	5.38 (136.7)
UT5R5632BCH	14.13 (358.9)	48.63 (1235.2)	5.38 (136.7)
UT6R1131BCH	14.13 (358.9)	56.93 (1446.0)	4.50 (114.3)
1004426ACH	14.13 (358.9)	24.31 (617.5)	4.50 (114.3)
1008951CH	14.13 (358.9)	24.31 (617.5)	4.50 (114.3)
1008952CH	14.13 (358.9)	32.47 (824.7)	4.50 (114.3)
1009693CH	14.13 (358.9)	24.16 (613.7)	5.38 (136.7)
1009694CH	14.13 (358.9)	32.31 (820.7)	5.38 (136.7)
1009695CH	14.13 (358.9)	49.94 (1268.5)	5.38 (136.7)
1009696CH	14.13 (358.9)	48.63 (1235.2)	5.38 (136.7)
UATZ6R1131CFLCH	14.13 (358.9)	56.94 (1446.3)	4.50 (114.3)
UBH2R1121BCH	14.13 (358.9)	24.94 (633.5)	4.50 (114.3)
UBH3R1121BCH	14.13 (358.9)	32.47 (824.7)	4.50 (114.3)
UBH4R1121BCH	14.13 (358.9)	40.63 (1032.0)	4.50 (114.3)
UHT2R1121BCH	14.13 (358.9)	24.31 (617.5)	4.50 (114.3)
UT4R1121BCH	14.13 (358.9)	40.63 (1032.0)	4.50 (114.3)
UT4R1121CCH	14.13 (358.9)	40.63 (1032.0)	4.50 (114.3)
UHT4R1121BCH	14.13 (358.9)	40.63 (1032.0)	4.50 (114.3)
UHT5R1121BCH	14.13 (358.9)	48.78 (1239.0)	4.50 (114.3)
UT5R1121BCH	14.13 (358.9)	48.78 (1239.0)	4.50 (114.3)
UT5R1121CCH	14.13 (358.9)	48.78 (1239.0)	4.50 (114.3)
UT2R1121BCH	14.13 (358.9)	24.31 (617.5)	4.50 (114.3)
UT2R1121CCH	14.13 (358.9)	24.31 (617.5)	4.50 (114.3)
UHT2R1421CCH	14.13 (358.9)	20.16 (512.1)	5.38 (136.7)
UT2R1421BCH	14.13 (358.9)	20.16 (512.1)	5.38 (136.7)
UHT3R1121BCH	14.13 (358.9)	32.47 (824.7)	4.50 (114.3)
UT3R1121BCH	14.13 (358.9)	32.47 (824.7)	4.50 (114.3)

Note

① Aluminum enclosure.

Approximate Dimensions in Inches (mm)

Horizontal Design—Multi Position Ring Type

Catalog Number	Height	Width	Depth
U2R2352TCRCH	14.13 (358.9)	24.31 (617.5)	5.38 (136.7)
URT2R2332UCH	14.13 (358.9)	24.31 (617.5)	5.38 (136.7)
U4R2352TCRCH	14.13 (358.9)	48.00 (1219.2)	5.38 (136.7)
U2V1031BCRCH ①	8.00 (203.2)	25.63 (650.9)	4.38 (111.1)
U3V1031BCRCH ①	8.00 (203.2)	35.88 (911.2)	4.38 (111.1)
U2R1121BCRCH	14.13 (358.9)	28.00 (711.2)	4.50 (114.3)
U3R1121BCRCH	14.13 (358.9)	38.00 (965.2)	4.50 (114.3)
U4R1121BCRCH	14.13 (358.9)	48.00 (1219.2)	4.50 (114.3)
U5R1121BCRCH	14.13 (358.9)	58.00 (1473.2)	4.50 (114.3)

Note

① Vertical gang.

Instrument Rated Sockets

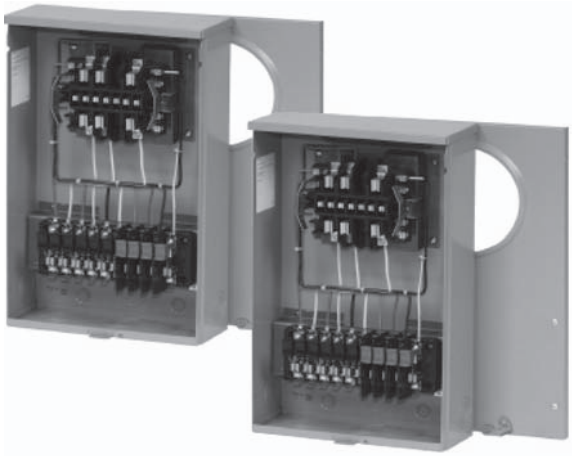

Contents

Description	*Page*
Product Selection	**V1-T4-26**
Dimensions	**V1-T4-26**

Product Description

- Available in 6, 7, 8 and 13 terminal designs
- 20 A ratings standard
- Multiple service designs available (overhead, underground, overhead/ underground)
- Multiple hub opening and closure plate sizes available
- 600 Vac rated
- Single cover/dual cover availability
- Provisional test switches and factory-installed test switch designs available

Product Selection

USTS132CCH

Instrument Rated Sockets

Ampere Rating	Jaws	Service	Opening, Hub or Closure Plate	Catalog Number
20	13 terminal	UG	Solid top	**USTH131A123CH**
20	13 terminal	OH/UG	3-5/16 hub cover plate	**USTS131B102CH**
20	13 terminal	OH/UG	3-5/16 hub cover plate	**USTS132B101CH**
20	13 terminal	OH/UG	3-5/16 hub cover plate	**USTS132CCH**
20	13 terminal	OH/UG	1-inch bolt-on hub	**1008694ACH**
20	8 terminal	OH/UG	1-inch bolt-on hub	**1008695ACH**
20	13 terminal	N/A	N/A	**1007003BCH**
20	13 terminal	Solid top and bottom	Solid top	**1007003CCH**
20	13 terminal	OH/UG	3-5/16 hub cover plate	**USTL131C207CH**
20	13 terminal	OH/UG	Hub opening	**USTS131BCH**
20	13 terminal	OH/UG	1-1/4-inch bolt-on hub	**USTS131L143CH**
20	13 terminal	N/A	N/A	**USTS132BCH**
20	6 terminal	OH/UG	Hub opening	**USTS61B138CH**
20	6 terminal	OH/UG	Hub opening	**UST61BCH**
20	8 terminal	OH/UG	Hub opening	**USTS82B166CH**
20	8 terminal	N/A	Solid top and bottom	**1007361BCH**
N/A	N/A	N/A	N/A	**1008539CH**
20	13 terminal	OH/UG	3-5/16 hub cover plate	**UASTS131C226CH**
20	13 terminal	OH	3-5/16 hub cover plate	**1004671CH**
20	7 terminal	OH	3-5/16 hub cover plate	**ULTS131CCH**
20	6 terminal	UG	Solid top	**STL61A433CH**
20	13 terminal	UG	Solid top	**STL131A120CH**

Dimensions

Approximate Dimensions in Inches (mm)

Instrument Rated Sockets

Catalog Number	Height	Width	Depth
USTH131A123CH	20.00 (304.8)	12.00 (304.8)	4.36 (110.7)
USTS131B102CH	20.00 (304.8)	12.00 (304.8)	4.36 (110.7)
USTS132B101CH	20.00 (304.8)	12.00 (304.8)	4.36 (110.7)
USTS132CCH	20.00 (304.8)	12.00 (304.8)	4.36 (110.7)
1008694ACH	20.00 (304.8)	12.00 (304.8)	4.36 (110.7)
1008695ACH	20.00 (304.8)	12.00 (304.8)	4.36 (110.7)
1007003BCH	N/A	N/A	N/A
1007003CCH	16.50 (419.1)	14.00 (355.6)	3.50 (88.9)
USTL131207CH	20.00 (304.8)	12.00 (304.8)	4.35 (110.5)
USTS131BCH	20.00 (304.8)	12.00 (304.8)	4.35 (110.5)
USTS131L143CH	20.00 (304.8)	12.00 (304.8)	4.35 (110.5)
USTS132BCH	N/A	N/A	N/A
USTS61B138CH	20.00 (304.8)	12.00 (304.8)	4.35 (110.5)
UST61BCH	20.00 (304.8)	12.00 (304.8)	4.35 (110.5)
USTS82B166CH	20.00 (304.8)	12.00 (304.8)	4.35 (110.5)
1007361BCH	16.50 (419.1)	14.00 (355.6)	3.50 (88.9)
1008539CH	N/A	N/A	N/A
UASTS131C226CH	20.00 (304.8)	12.00 (304.8)	4.35 (110.5)
1004671CH	17.00 (431.8)	10.00 (254.0)	5.00 (127.0)
ULTS131CCH	22.00 (558.8)	12.00 (304.8)	4.94 (125.5)

Residential Pedestals

Contents

Description	*Page*
Product Selection	**V1-T4-28**
Dimensions	**V1-T4-28**

Product Description

- Available in 100 A, 200 A, 300 A and 320 A designs
- Available in 4- or 5-jaw configurations
- Underground service design is standard
- Bypass options (lever, horn) are available
- Solid top designs

Product Selection

UHTRP242363CH

Residential Pedestals

Ampere Rating	Jaws	Service	Bypass	Connections Line	Load	Opening, Hub or Closure Plate	Catalog Number
320	4	UG	—	3/8-inch studs	3/8-inch studs	Solid top	**1008847CH**
320	4	UG	Lever	#6–350 kcmil line and line neutral	2/0–250 kcmil load and load neutral	Solid top	**1009017CH** ①
300	4	UG	Lever	#6–350 kcmil line and line neutral	2/0–250 kcmil load and load neutral	Solid top	
200	4	UG	Horn	4/0 compression (line) 2/0 compression (neutral)	#6–250 kcmil load and load neutral	Solid top	**1006388CH**
200	4	UG	Horn	#8–350 kcmil	#8–350 kcmil	Solid top	**UHTRP242363CH**
200	4	UG	Horn	#6–350 kcmil line and line neutral	#6–250 kcmil load neutral	Solid top	**1008846CH**
200	4	UG	Horn	#6–350 kcmil line and line neutral	#6–250 kcmil load neutral	N/A	**1008961CH**
200	5	N/A	N/A	N/A	N/A	N/A	**1008966CH**
200	4	UG	—	#6–350 kcmil line and line neutral	#6–350 kcmil load and load neutral	Solid top	**1009264CH**
200	4	UG	—	4/0 compression (line) 2/0 compression (neutral)	#6–350 kcmil load and load neutral	Solid top	**1009265CH**
100	4	UG	—	#6–350 kcmil line and line neutral	#6–250 kcmil load neutral	Solid top	**1009078CH**

Pedestal Extension Kits

Connections Line	Load	Catalog Number
Pedestal extension kit for 1008846CH	Pedestal extension kit for 1008846CH	**1009021CH**
		1009022CH
		1009026CH

Dimensions

Approximate Dimensions in Inches (mm)

Residential Pedestals

Catalog Number	Height	Width	Depth
1008847CH	58.00 (1473.2)	12.97 (329.4)	4.93 (125.2)
1009017CH ①	63.00 (1600.2)	12.96 (329.2)	4.93 (125.2)
1006388CH	61.00 (1549.4)	8.96 (227.6)	4.93 (125.2)
UHTRP242363CH	62.63 (1590.8)	8.97 (227.8)	4.94 (125.5)
1008846CH	70.00 (1778.0)	11.00 (279.4)	6.00 (152.4)
1008961CH	69.93 (1776.2)	N/A	6.00 (152.4)
1008966CH	N/A	N/A	N/A
1009264CH	74.00 (1879.6)	8.96 (227.6)	4.93 (125.2)
1009265CH	74.00 (1879.6)	8.97 (227.8)	4.94 (125.5)
1009078CH	69.93 (1776.2)	11.00 (279.4)	6.00 (152.4)

Pedestal Extension Kits

Catalog Number	Height	Width	Depth
1009021CH	18.00 (457.2)	11.00 (279.4)	6.00 (152.4)
1009022CH	18.00 (457.2)	12.96 (329.2)	4.93 (125.2)
1009026CH	30.00 (762.0)	12.96 (329.2)	4.93 (125.2)

Note

① 200 A breakers.

Product Description

This section will help you better understand the features and benefits of the 125 A and 200 A Eaton designed meter socket.

Features and Benefits

Construction Features

1. High strength, glass-filled meter block assembly, lay-in connectors with captive slide nut and screw.

2. 100% plated copper alloy meter jaw with reinforcing spring clip and meter guide.

3. Extruded neutral lug with integral triplex ground and quadplex ground provision.

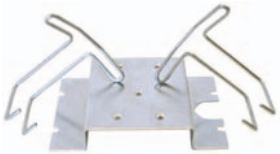

4. Bridge and meter supports are 100% zinc chromate plated.

200 A Ringless Block Assembly With Horn Bypass

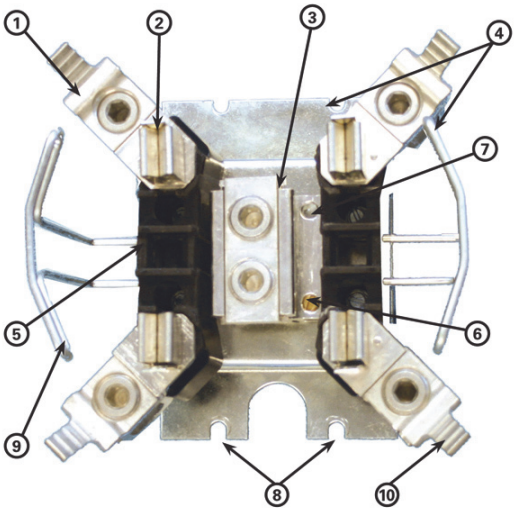

5. Fifth terminal locating hole in 9 o'clock position.
6. Triplex ground is a standard feature.
7. Quadplex ground provision.
8. Durable "four-point" bridge mounting (2 top, 2 bottom).
9. Extra rigid meter support for ringless sockets.
10. Optional, integral horn bypass extruded on slide nut. Horn is ribbed for secure attachment to utility bypass jumpers. Field-installable horn bypass kit available.

Product Selection

Meter Socket Accessories

Description	Part Number
Hub Closure Plates	
Hub closure plate meter socket accessories	**ARP00002CHB**
Clam shell hub closure plate meter socket accessories	**ARP00002CHBCS**
1-inch hub closure plate meter socket accessories	**ARP00003CH1**
Clam shell 1-inch hub closure plate—small opening	**ARP00003CH1CS**
1-1/4-inch hub closure plate meter socket accessories	**ARP00004CH12**
Clam shell 1-1/4-inch hub closure plate—small opening	**ARP00004CH12CS**
1-1/2-inch hub closure plate meter socket accessories	**ARP00005CH15**
Clam shell 1-1/2-inch hub closure plate—small opening	**ARP00005CH15CS**
2-inch hub closure plate meter socket accessories	**ARP00006CH2**
Aluminum hub closure plate for single sockets	**ARP00008CH**
Large hub cover plate	**ARP00016CHB**
Hubs	
2-inch hub with large diameter opening	**ARP00017CH2**
2-1/2-inch hub for meter socket accessories	**ARP00007CH25**
Clam shell 2-1/2-inch hub for meter socket accessories	**ARP00007CH25CS**
2.5-inch hub with large diameter opening	**ARP00018CH25**
3-inch hub	**ARP00019CH3**
3-1/2-inch hub for meter sockets	**ARP00020CH35**
4-inch hub	**ARP00021CH4**
Hub adapter from large opening to small opening	**ARP00015CHAP**
Lug Kits	
(2) #6–250 kcmil, double barrel lug for 4, 5 and 7 terminal 3/8-inch stud sockets	**ARP00118CH**
#4–600 or (2) 1/0–250 kcmil, single barrel lug for 4, 5 and 7 terminal 3/8-inch stud sockets	**ARP00429CH**
#6–350 kcmil, single barrel lug for 4, 5 and 7 terminal 3/8-inch stud sockets	**ARP00119CH**
#4–600 kcmil, single barrel lug for 4, 5 and 7 terminal 3/8-inch stud sockets	**ARP00129CH**
(2) #6–350 kcmil, double barrel lug for 4 terminal 3/8-inch stud sockets	**ARP00427CH**
Miscellaneous	
Screw sealing ring for single meter sockets	**ARP00027CH**
Fifth jaw kit	**ARP00035CHJ**
Fifth jaw for bolt on meter	**ARP00326CH**
Neutral insulating kit for lever bypass sockets only	**ARP00759CH**
100 A meter socket horn cap assembly kit	**ARP00777CH**
Fifth jaw kit for 320 A offset socket	**ARP00862CH**
HQ anti-inversion clip for single meter sockets	**ARP00984CH**
Fifth jaw for Chicago and Wisconsin pedestal	**ARP01085CH**
350 kcmil BNS cap assembly kit for meter sockets	**ARP01226CH**
Right hand block assembly with Z Bar	**ARP01258CH**
Left hand block assembly with Z Bar	**ARP01414CH**
Meter pack trough closure plate kit	**ARP01565CH**
2/0 connector kit for MBB and MBP socket breaker	**ARP01612CH**

Cross-Reference

Meter Sockets

Description	Manufacturer Eaton Part Number	Milbank Part Number
125 A, OH/UG, ringless, triplex ground, hub opening	**UTRS101BE**	**U7487-RL-TG**
125 A, OH/UG, ringless, triplex ground, hub cover plate	**UTRS101CE**	**U7487-XL-TG**
125 A, OH/UG, ringless, triplex ground, hub opening, horn bypass	**UHTRS101BE**	**U7487-RL-TG-KK**
125 A, OH/UG, ringless, triplex ground, hub cover plate, horn bypass	**UHTRS101CE**	**U7487-XL-TG-KK**
125 A, OH/UG, ringless, triplex ground, hub opening, fifth terminal	**UTRS101BCH + MSR5TK**	**U7487-RL-TG-5T**
125 A, OH/UG, ringless, triplex ground, hub cover plate, fifth terminal	**UTRS101CE + MSR5TK**	**U7487-XL-TG-5T**
125 A, OH/UG, ringless, triplex ground, hub opening, horn bypass, fifth terminal	**UHTRS101BCH + MSR5TK**	**U7487-RL-TG-KK-5T**
125 A, OH/UG, ringless, triplex ground, hub cover plate, horn bypass, fifth terminal	**UGHTRS101CE + MSR5TK**	**U7487-XL-TG-KK-5T**
200 A, OH, ringless, triplex ground, hub opening	**UTRS202BCH**	**U7021-RL-TG**
200 A, OH, ringless, triplex ground, hub cover plate	**UTRS202CCH**	**U7021-XL-TG**
200 A, OH, ringless, triplex ground, hub opening, horn bypass	**UHTRS202BCH**	**U7021-RL-TG-KK**
200 A, OH, ringless, triplex ground, hub cover plate, horn bypass	**UHTRS202CCH**	**U7021-RL-TG-KK**
200 A, OH, ringless, triplex ground, hub opening, fifth terminal	**UGTRS202BCH**	**U7021-RL-TG-5T**
200 A, OH, ringless, triplex ground, hub cover plate, fifth terminal	**UGTRS202CCH**	**U7021-XL-TG-5T**
200 A, OH, ringless, triplex ground, hub opening, horn bypass, fifth terminal	**UGHTRS202BCH**	**U7021-RL-TG-KK-5T**
200 A, OH, ringless, triplex ground, hub cover plate, horn bypass, fifth terminal	**UGHTRS202CCH**	**U7021-RL-TG-KK-5T**
200 A, OH/UG, ringless, triplex ground, hub opening, 250 kcmil lugs	**UTRS212BCH**	**No cross (no 250 kcmil lugs)**
200 A, OH/UG, ringless, triplex ground, hub cover plate, 250 kcmil lugs	**UTRS212CCH**	**No cross (no 250 kcmil lugs)**
200 A, OH/UG, ringless, triplex ground, hub opening, horn bypass, 250 kcmil lugs	**UHTRS212BCH**	**No cross (no 250 kcmil lugs)**
200 A, OH/UG, ringless, triplex ground, hub cover plate, horn bypass, 250 kcmil lugs	**UHTRS212CCH**	**No cross (no 250 kcmil lugs)**
200 A, OH/UG, ringless, triplex ground, hub opening, fifth terminal, 250 kcmil lugs	**UGTRS212BCH**	**No cross (no 250 kcmil lugs)**
200 A, OH/UG, ringless, triplex ground, hub cover plate, fifth terminal, 250 kcmil lugs	**UGTRS212CCH**	**No cross (no 250 kcmil lugs)**
200 A, OH/ UG, ringless, triplex ground, hub opening, horn bypass, fifth terminal, 250 kcmil lugs	**UGHTRS212BCH**	**No cross (no 250 kcmil lugs)**
200 A, OH/UG, ringless, triplex ground, hub cover plate, horn bypass, fifth terminal, 250 kcmil lugs	**UGHTRS212CCH**	**No cross (no 250 kcmil lugs)**
200 A, OH/UG, ringless, triplex ground, hub opening, 350 kcmil lugs	**UTRS213BE**	**U7040-RL-TG**
200 A, OH/UG, ringless, triplex ground, hub cover plate, 350 kcmil lugs	**UTRS213CE**	**U7040-XL-TG**
200 A, OH/UG, ringless, triplex ground, hub opening, horn bypass, 350 kcmil lugs	**UHTRS213BE**	**U7040-RL-TG-KK**
200 A, OH/UG, ringless, triplex ground, hub cover plate, horn bypass, 350 kcmil lugs	**UHTRS213CE**	**U7040-XL-TG-KK**
200 A, OH/UG, ringless, triplex ground, hub opening, fifth terminal, 350 kcmil lugs	**UGTRS213BE**	**U7040-RL-TG-5T**
200 A, OH/UG, ringless, triplex ground, hub cover plate, fifth terminal, 350 kcmil lugs	**UGTRS213CE**	**U7040-XL-TG-5T**
200 A, OH/ UG, ringless, triplex ground, hub opening, horn bypass, fifth terminal, 350 kcmil lugs	**UGHTRS213BE**	**U7040-RL-TG-KK-5T**
200 A, OH/UG, ringless, triplex ground, hub cover plate, horn bypass, fifth terminal, 350 kcmil lugs	**UGHTRS213CE**	**U7040-XL-TG-KK-5T**
200 A, UG, ringless, triplex ground, solid top	**UTRS223ACH**	**U1980-0-TG**
200 A, UG, ringless, triplex ground, solid top, horn bypass	**UHTRS223ACH**	**U1980-0-TG-KK**
200 A, UG, ringless, triplex ground, solid top, fifth terminal	**UGTRS223ACH**	**U1980-O-TG-5T**
200 A, UG, ringless, triplex ground, solid top, horn bypass, fifth terminal	**UGHTRS223ACH**	**U1980-O-TG-KK-5T**

Lever Bypass

Description	Manufacturer Eaton Part Number	Milbank Part Number
200 A, OH, lever bypass, 4 terminal, small hub opening	UTE4203BCH	U9800-RL
200 A, OH, lever bypass, 4 terminal, hub cover plate	UTH4203CCH	U9800-XL
200 A, OH, lever bypass, 4 terminal, large hub opening	UTH4203TCH	U9800-R
200 A, OH, lever bypass, 4 terminal, large hub cover plate	UTH4203UCH	U9800-X
200 A, OH, lever bypass, 5 terminal, small hub opening	UTE5203BCH	U4550-RL
200 A, OH, lever bypass, 5 terminal, hub cover plate	UTH5203CCH	U4550-XL
200 A, OH, lever bypass, 5 terminal, large hub opening	UTH5203TCH	U9559-R
200 A, OH, lever bypass, 5 terminal, large hub cover plate	UTH5203UCH	U9550-X
200 A, OH, lever bypass, 7 terminal, small hub opening	UTE7203BCH	U4701-RL
200 A, OH, lever bypass, 7 terminal, hub cover plate	UTH7203CCH	U4701-XL
200 A, OH, lever bypass, 7 terminal, large hub opening	UTE7203TCH	U4701-R
200 A, OH, lever bypass, 7 terminal, large hub cover plate	UTH7203UCH	U4701-X
200 A, OH/UG, lever bypass, 4 terminal, small hub opening	UTE4213BCH	U9801-RL
200 A, OH/UG, lever bypass, 4 terminal, hub cover plate	UTE4213CCH	U9801-XL
200 A, OH/UG, lever bypass, 4 terminal, large hub opening	UTE4213TCH	U9801-R
200 A, OH/UG, lever bypass, 4 terminal, large hub cover plate	UTH4213UCH	U9801-XL
200 A, OH/UG, lever bypass, 4 terminal, large hub opening with adapter plate	UTE4213ZCH	U9801-RRL
200 A, OH/UG, lever bypass, 4 terminal, large hub opening with adapter and cover plate	UTH4213YCH	U9801-RXL
200 A, OH/UG, lever bypass, 5 terminal, small hub opening	UTE5213BCH	U4551-RL
200 A, OH/UG, lever bypass, 5 terminal, hub cover plate	UTE5213CCH	U4551-XL
200 A, OH/UG, lever bypass, 5 terminal, large hub opening	UTE5213TCH	U9551-R
200 A, OH/UG, lever bypass, 5 terminal, large hub cover plate	UTH5213UCH	U9551-X
200 A, OH/UG, lever bypass, 5 terminal, large hub opening with adapter plate	UTE5213ZCH	U9551-RRL or U4551-RRL
200 A, OH/UG, lever bypass, 5 terminal, large hub opening with adapter and cover plate	UTH5213YCH	U9551-RXL or U4551-RXL
200 A, OH/UG, lever bypass, 7 terminal, small hub opening	UTE7213BCH	U9701-RL or U4701-RL
200 A, OH/UG, lever bypass, 7 terminal, hub cover plate	UTE7213CCH	U9701-XL or U4701-XL
200 A, OH/UG, lever bypass, 7 terminal, large hub opening	UTE7213TCH	U9701-R or U4701-R
200 A, OH/UG, lever bypass, 7 terminal, large hub cover plate	UTE7213UCH	U9701-RX or U4701-RX
200 A, OH/UG, lever bypass, 7 terminal, large hub opening with adapter plate	UTE7213ZCH	U9701-RRL or U4701-RRL
200 A, OH/UG, lever bypass, 7 terminal, large hub opening with adapter and cover plate	UTH7213YCH	U9701-RXL or U4701-RXL
320 A, OH, lever bypass, 4 terminal, large hub opening	UTH4300TCH	U1079-R or U1797-R
320 A, OH, lever bypass, 4 terminal, large hub cover plate	UTH4300UCH	U1079-X or U1797X
320 A, OH/UG, lever bypass, 4 terminal, large hub opening	UTH4330TCH	U2448-R or U2124-R
320 A, OH/UG, lever bypass, 4 terminal, large hub cover plate	UTH4330UCH	U2448-RX or U2124-RX
320 A, OH, lever bypass, 7 terminal, large hub opening	UTH7300TCH	—
320 A, OH, lever bypass, 7 terminal, large hub cover plate	UTH7300UCH	—
320 A, OH/UG, lever bypass, 7 terminal, large hub opening	UTH7330TCH	U2120-R
320 A, OH/UG, lever bypass, 7 terminal, large hub cover plate	UTH7330UCH	U2120-X

Accessories

Description	Manufacturer Eaton Part Number	Milbank Part Number
Small hub cover plate	**ARP00002CHB**	**A7551**
1-inch hub	**ARP00003CH1**	**A7514**
1-1/4-inch hub	**ARP00004CH12**	**A7515**
1-1/2-inch hub	**ARP00005CH15**	**A7516**
2-inch hub	**ARP00006CH2**	**A7517**
2-1/2-inch hub	**ARP00007CH25**	**A7518**
3-inch hub	**ARP00019CH3**	**A8110**
3-1/2-inch hub	**ARP00020CH35**	**A8111**
4-inch hub	**ARP00021CH4**	**A8112**
Large to small hub opening adapter plate	**ARP00015CHAP**	**S8324**
Large hub cover plate	**ARP00016CHB**	**S9064**

Mechanical Lugs

Contents

Description

Mechanical Lugs

Product Description

- Single lug
- Extended tang single lug
- Extended tang triple lug
- Double lug
- Extended tang double lug
- Extended tang quadruple lug

Product Selection

Mechanical Lugs

Description	Style Number
Single #14–#6 mechanical lug	**ESL146**
Single #14–2/0 mechanical lug	**ESL1420**
Single #6–250 kcmil mechanical lug	**ESL6250**
Single #4–500 kcmil mechanical lug	**ESL4500**
Double #14–2/0 mechanical lug	**EDL1420**
Double #6–250 kcmil mechanical lug	**EDL6250**
Extended tang single lug #6–350 kcmil	**EPBSL6350**
Extended tang single lug 300–800 kcmil	**EPBSL300800**
Extended tang double lug #6–350 kcmil	**EPBDL6350**
Extended tang double lug 300–800 kcmil	**EPBDL300800**
Extended tang triple lug #6–350 kcmil	**EPBTL6350**
Extended tang triple lug 300–800 kcmil	**EPBTL300800**
Extended tang quadruple lug #6–350 kcmil	**EPBQL6350**
Extended tang quadruple lug 300–750 kcmil	**EPBQL300800**
Extended tang single lug #2–600 kcmil	**EPBSL2600**
Extended tang single lug 500–1000 kcmil	**EPBSL5001000**
Extended tang triple lug #2–600 kcmil	**EPBTL2600**

Dimensions

Approximate Dimensions in Inches (mm)

Mechanical Lugs

Style Number	Height	Width	Length
ESL146	2.50 (63.5)	8.25 (82.6)	3.50 (88.9)
ESL1420	2.50 (63.5)	10.50 (266.7)	3.50 (88.9)
ESL6250	2.50 (63.5)	10.50 (266.7)	3.50 (88.9)
ESL4500	2.50 (63.5)	10.50 (266.7)	3.50 (88.9)
EDL1420	3.50 (88.9)	4.00 (101.6)	3.50 (88.9)
EDL6250	3.50 (88.9)	3.75 (95.3)	4.50 (114.3)
EPBSL6350	2.50 (63.5)	8.25 (82.6)	3.50 (88.9)
EPBSL300800	2.50 (63.5)	10.50 (266.7)	3.50 (88.9)
EPBDL6350	3.50 (88.9)	4.50 (114.3)	5.50 (139.7)
EPBDL300800	3.00 (76.2)	10.50 (266.7)	5.50 (139.7)
EPBTL6350	3.50 (88.9)	4.50 (114.3)	5.50 (139.7)
EPBTL300800	2.50 (63.5)	10.00 (254.0)	5.75 (146.0)
EPBQL6350	2.25 (57.2)	6.50 (165.1)	6.00 (152.4)
EPBQL300800	4.25 (108.0)	8.50 (215.9)	8.50 (215.9)
EPBSL2600	2.50 (63.5)	8.25 (82.6)	3.50 (88.9)
EPBSL5001000	2.50 (63.5)	10.50 (266.7)	3.50 (88.9)
EPBTL2600	2.25 (57.2)	6.50 (165.1)	6.00 (152.4)

Communication Grounding Device

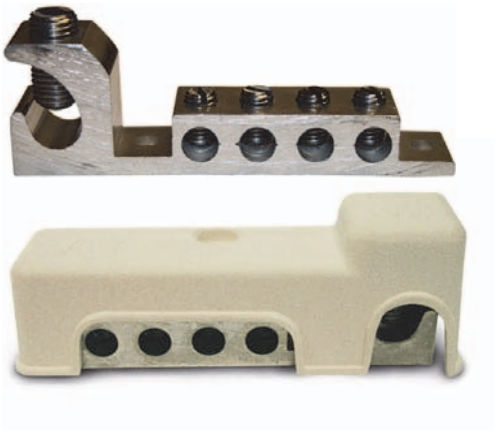

Contents

Description	*Page*
Wiring Diagram	**V1-T4-36**
Dimensions	**V1-T4-36**

Product Description

This product is required per the 2008 NEC Article 250.94 "Bonding for Other Systems."

This product is applied externally to residential homes, so that communications systems devices such as satellite, TV, cable and CATV can be properly bonded at a single point. This device has two mounting holes that can be used for easy installation.

Features, Benefits and Functions

Communication Grounding Device Features

- Lay-in lug for ease of installation
- Four bonding terminals
- Heavy-duty zinc-plated steel screws included
- Two mounting holes to securely hold device into place
- For use with copper and aluminum conductors

Cover Features

- Outdoor rated reinforced glass polyester compound
- Suitable for UV exposure
- Paintable exterior, allowing for matching of exterior of home

Standards and Certifications

- ETL listed

Product Selection

Communication Grounding Device

Wire Range Bonding Conductor	Wire Range Ground Electrode	Quantity	Catalog Number
#14–#2–STR–SOL–CU #12–#2–SRT–SOL–AL	#8–1/0–STR–SOL–CU/AL	(1) Clamshell	**MSEGR2CS**
#14–#2–STR–SOL–CU #12–#2–SRT–SOL–AL	#8–1/0–STR–SOL–CU/AL	(10) Bulk pack	**MSEGR2**

Wiring Diagram

Installation and Configuration

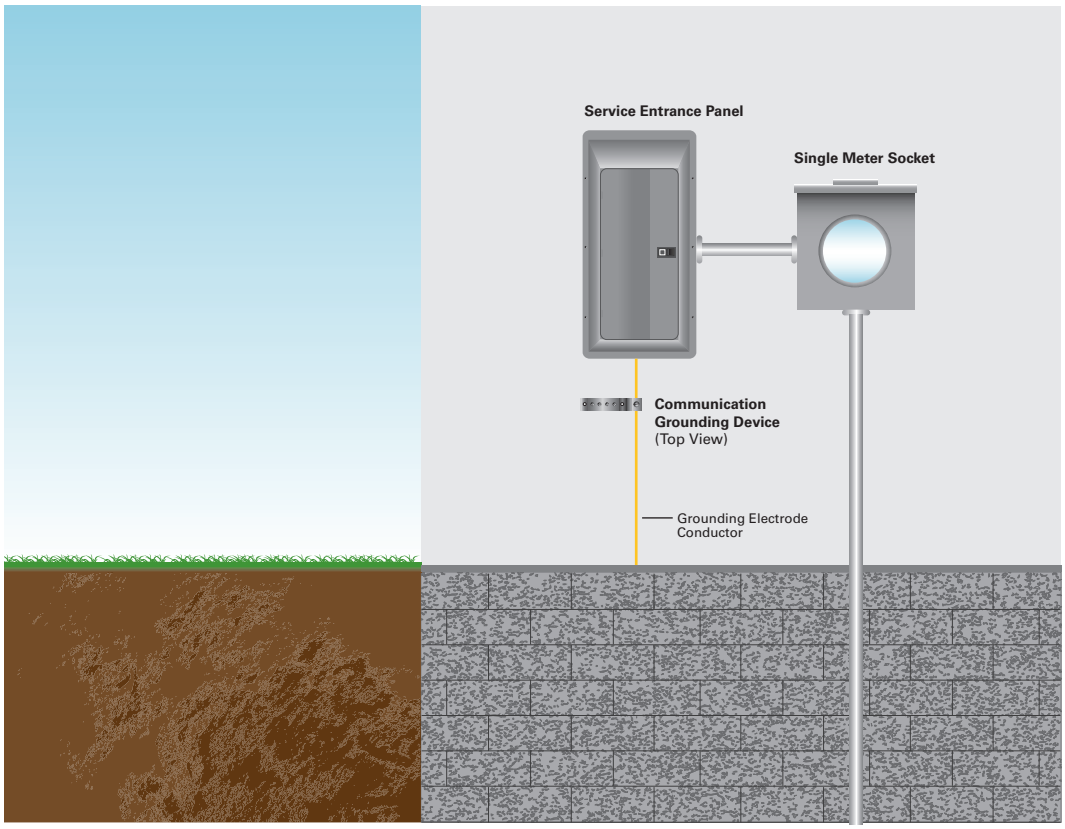

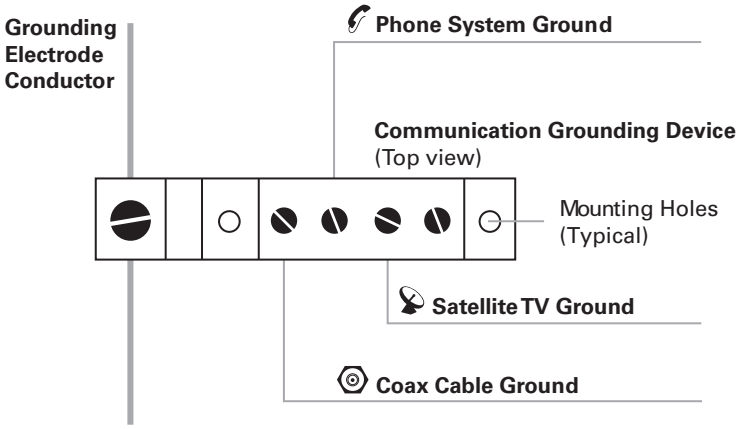

Dimensions

Approximate Dimensions in Inches (mm)

Communication Grounding Device

Catalog Number	Length	Width	Height
MSEGR2CS	0.75 (19.1)	3.90 (99.1)	1.20 (30.5)
MSEGR2	0.75 (19.1)	3.90 (99.1)	1.20 (30.5)

Residential Meter Breakers

Contents

Description	*Page*
Residential Meter Breakers	
Non-EUSERC Combination Service Entrance Devices 100–200 A Styles	**V1-T4-39**
Meets EUSERC Requirements Service Entrance Devices 100–225 A.	**V1-T4-48**
West Coast All-In-One Design	**V1-T4-59**
Mechanical Interlock Cover	**V1-T4-65**
House Panels	**V1-T4-75**
Commercial Safety Sockets	**V1-T4-83**
CH Style Renovation Solutions	**V1-T4-86**
Aluminum Meter Breakers	**V1-T4-87**

Residential Meter Breakers

Product Description

A meter breaker is service entrance equipment that consists of a single meter socket and loadcenter (circuit breaker distribution section) or meter socket and main breaker combined in one enclosure. Sometimes called Combos, All-in-Ones, Meter Centers or Meter Mains, these units are increasing in popularity as the socket and loadcenter or main breaker are located in one location, thus providing the contractor with a labor and material savings when installing.

Application Description

In addition to residential installations, meter breakers are equally applicable for rural service entrance, mobile homes and construction site temporary power. Meter breakers are most often sold in the western, southwestern and southeastern United States. The popularity of meter breakers is continuing to increase as more utilities deregulate and pass the responsibility of supplying watthour meter sockets on to the electrical contractor.

Application Considerations

Eaton has the meter breaker to meet your application, offering:

- Non-EUSERC
- EUSERC/West Coast
- House panels
- Commercial safety socket

Non-EUSERC (Page V1-T4-39)

Eaton's line of non-EUSERC meter breakers are designed for customers served by utilities that are not members of EUSERC.

EUSERC/West Coast (Page V1-T4-59)

Eaton's line of EUSERC required devices adhere to the agreed upon standards. EUSERC utilities are predominately located in the western United States, but some eastern and midwestern utilities are also members. These units can also be used in many Non-EUSERC areas.

House Panels (Page V1-T4-75)

CH and BR Styles (**Page V1-T4-76**).

Meter breaker device rated at 300–400 A. Applied in EUSERC and non-EUSERC areas.

Commercial Safety Sockets (Page V1-T4-83)

Applied in EUSERC and non-EUSERC service areas and used in commercial applications.

Features, Benefits and Functions

- Both Type BR and CH branch circuit breaker styles available
- Meets latest NEC wire bending space requirements
- Slotted sealing screws at hub with sealing provision provided
- Surface units are supplied with mounting tabs
- Semi-flush units are supplied with stucco flange
- Meter socket ring landing will accept locking security rings
- Overhead or underground service
- Fifth jaw can be installed in the 3 o'clock or 9 o'clock position
- Semi-flush with nail flange or surface mounting
- Meter mounting and underground pull sections are utility sealable
- Units are rated a minimum of 10 kAIC; some units are 22 kAIC
- Numerous units supplied with center keyhole for ease of mounting
- NEMA 3R rainproof construction

Standards and Certifications

- UL Specification 414 (socket)
- UL File Number E52977
- AEIC-EEI-NEMA Standards (MSJ-7)
- Meet EUSERC utility requirements where noted
- Documented seismic qualified—UBC and CBC Title 24
- UL Specification 67 (panel)

Listed

Technical Data and Specifications

- Ratings single-phase, three-wire, 120/240 Vac
- 100–225 A main breaker and main lug types
- 10,000 A rms symmetrical short-circuit rating
- Available kAIC ratings: 10 k with BW breaker, 22 k with CSR breaker and 35 k with CSH breaker

Consult TD.31F.01.T.E for dimensions, wiring diagrams and knockouts.

Residential Meter Breakers

Standard Design Non-EUSERC Panel

Compact Design

Contents

Description	*Page*
Residential Meter Breakers	**V1-T4-37**
Non-EUSERC Combination Service Entrance Devices 100–200 A Styles	
Meets EUSERC Requirements Service Entrance Devices 100–225 A.	**V1-T4-48**
West Coast All-In-One Design	**V1-T4-59**
Mechanical Interlock Cover	**V1-T4-65**
House Panels	**V1-T4-75**
Commercial Safety Sockets	**V1-T4-83**
CH Style Renovation Solutions	**V1-T4-86**
Aluminum Meter Breakers	**V1-T4-87**

Non-EUSERC Combination Service Entrance Devices 100–200 A Styles

Product Description

A device that may include a meter socket, main breaker and loadcenter section within the same enclosure.

- Meter main = meter socket and main breaker
- Meter breaker = meter socket, main breaker and loadcenter section

Application Description

Eaton's line of non-EUSERC meter breakers are designed for customers served by utilities that are not members of EUSERC.

Features, Benefits and Functions

Meter Mains and All-in-Ones

- Single-phase, three-wire, 120/240 Vac,10 kAIC
- Larger lay-in lugs and 3-inch (76.2 mm) knockouts for ease of installation
- Box-type main lugs included
- Factory-installed neutral
- Hub provisions on top endwall. If hubs are required, order "DS" style
- Ring, ringless and ringless with horn bypass styles available
- Ringless style, provided with embossed covers and security latch for utility company lock
- Padlockable device covers provide additional measure of safety and help prevent tampering
- NEMA 3R rainproof construction

Meter Mains

- Meter socket and main breaker
- Stainless steel latches on meter compartments in MBP types
- No distribution section included

All-in-Ones

- Meter socket and loadcenter distribution section
- Stainless steel latches on meter compartments
- Several designs with horn bypass and fifth jaw
- Center-fed main breaker, lugs or provision
- Uses Type BR 1-inch (25.4 mm) wide branch breakers
- Special channel for top exit

Catalog Number Selection

MB 20 40 B 200 BT S _

Meter Breaker Type
- **MB** = 1-inch BR Type
- **MBE** = 1-inch BR Type—EUSERC
- **CMB** = 3/4-Inch (19.1 mm) CH Type
- **CMBE** = 3/4-inch (19.1 mm) CH Type—EUSERC

Spacing
Number of spaces

Poles
Maximum number of poles

Main
- **B** = Main breaker included
- **P** = Provision for main
- **L** = Main lug

Amperes
Amperage of unit

Breaker Feed
- **BT** = Bottom and top
- **B** = Bottom only
- **T** = Top only

Mounting
- **S** = Surface
- **F** = Flush/stucco

Accessories/Modifications
- **D** = 5th jaw and horn bypass
- **CU** = Copper
- **C** = Single cover compact design
- **CR** = Two cover compact design

Product Selection

Note: See knockout drawings on **Pages V1-T4-68 through V1-T4-74** for hub information.

Standard Design Non-EUSERC Panel

Compact Design

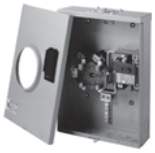

Combination Service Entrance Devices—Non-EUSERC

Ampere Rating	Bypass	Service	kAIC	Jaws	Distribution	Main	Branch Breaker Type	Dimensions and Enclosure Shape ①	Page Numbers Wiring	Page Numbers Knockout ①	Catalog Number
Ring Style Meter Mains (no distribution section included)											
150	None	OH/UG	10	4	None	CSR2150	None	13	**V1-T4-46**	**V1-T4-74**	**MBB150BTSCR**
150	None	OH/UG	22	4	None	CSR2150	None	3	**V1-T4-43**	**V1-T4-70**	**CMBB150BTS** ⑥⑦
200	None	OH/UG	10	4	None	CSR2200	None	13	**V1-T4-46**	**V1-T4-74**	**MBB200BTSCR**
200	None	OH/UG	②	4	None	Provision ④⑤	None	3	**V1-T4-43**	**V1-T4-70**	**CMBP200BTS** ⑥⑦
200	None	OH/UG	22	4	None	CSR2200	None	3	—	**V1-T4-70**	**CMBB200BTS** ⑥⑦
Ringless Meter Mains (no distribution section included)											
150	None	OH/UG	10	4	None	CSR2150	None	13	**V1-T4-46**	**V1-T4-74**	**MBB150BTSC** ⑦
200	None	OH/UG	10	4	None	CSR2200	None	9	**V1-T4-47**	**V1-T4-74**	**MBB200BTS** ⑧
200	None	OH/UG	10	4	None	CSR2200	None	13	**V1-T4-46**	**V1-T4-74**	**MBB200BTSC** ⑦
150	None	OH/UG	10	4	None	CSR2125	None	9	**V1-T4-47**	**V1-T4-74**	**MBB150BTS**
200	None	OH/UG	②	4	None	Provision ③	None	9	**V1-T4-47**	**V1-T4-74**	**MBP200BTS** ⑦
200	Horn	OH/UG	②	5	None	Provision ③④	None	11	**V1-T4-45**	**V1-T4-74**	**MBP200SD**
200	Horn	OH/UG	②	5	None	Provision ③④	None	9	**V1-T4-47**	**V1-T4-74**	**MBP200BTSD**
100	Horn	OH/UG	10	5	None	Provision	None	15	—	**V1-T4-74**	**CHMMB100BTS**
150	Horn	OH/UG	10	5	None	CSR2150	None	16	—	**V1-T4-74**	**CHMMB150BTS**
200	Horn	OH/UG	10	5	None	CSR2200	None	16	—	**V1-T4-74**	**CHMMB200BTS**
150	None	OH/UG	10	4	4/8	CSR	BR	—	—	—	**MB48B150TSG**
200	None	OH/UG	10	4	4/8	CSR	BR	—	—	—	**MB48B200BTSG**
200	Lever	OH/UG	22	4	8/16	CSR	BR	—	—	—	**MBX816B200BTS**
200	Lever	OH/UG	22	4	20/40	CSR	BR	—	—	—	**MBX2040B200BTS**

Notes

① See **Page V1-T4-68** for box details.
② Per installed main breaker rating.
③ When a provision for main is provided, order one of the main breakers listed in **Page V1-T4-43**. Panels are dual labeled to accept Types BW, CSR or CSH Main Breakers.
④ MCBK225 lug kit is needed for load side cable connection for Meter Mains. Please order separately.
⑤ When a provision for main is provided, order one of the main breakers listed in this table. Panels are labeled to accept Type CSR Main Breakers.
⑥ Copper bus.
⑦ One-piece cover on utility side, Florida approved.
⑧ Single cover design.
⑨ Xcel approved.

Note: See knockout drawings on **Pages V1-T4-68 through V1-T4-74** for hub information.

Combination Service Entrance Devices—Non-EUSERC, continued

Ampere Rating	Bypass	Service	kAIC	Jaws	Distribution	Main	Branch Breaker Type	Dimensions and Enclosure Shape ①	Page Numbers Wiring	Page Numbers Knockout ①	Catalog Number
Ring Style All-in-Ones (includes distribution section)											
125	None	OH/UG	②	4	2/4	None—refer to Distribution CSR2150	CH	2	**V1-T4-43**	**V1-T4-70**	**CMB24L125BTS** ④⑤
150	None	OH/UG	22	4	8		CH	3	**V1-T4-44**	**V1-T4-70**	**CMB88B150BTS** ④⑤
200	None	OH/UG	10	4	4/8	CSR2200	BR	3	**V1-T4-44**	**V1-T4-70**	**MB48B200BTS** ⑤⑥
200	None	OH/UG	22	4	8	CSR2200	CH	3	**V1-T4-44**	**V1-T4-70**	**CMB88B200BTS** ④⑤⑥
200	None	UG	22	4	32/42	CSR2200	CH	7	**V1-T4-43**	**V1-T4-69**	**CMB3242B200BS** ④⑤
200	None	OH/UG	22	—	42/42	—	CH	—	—	—	**CMB4242B200BTS** ④
Ringless All-in-Ones (includes distribution section)											
125	None	OH/UG	22	4	4/8	CSR2125	BR	21	—	**V1-T4-73**	**MBT48B125BTS**
150	None	OH/UG	22	4	4/8	CSR2150	BR	21	**V1-T4-46**	**V1-T4-73**	**MBT48B150BTS**
150	Horn	OH/UG	10	5	8/16	BW2150	BR	11	—	—	**MB816B150STD** ⑦
150	Horn	OH/UG	10	5	20/40	BW2150	BR	11	**V1-T4-47**	**V1-T4-74**	**MB2040B150SD** ⑦
200	None	OH/UG	10	4	8/16	CSR2200	BR	10	**V1-T4-46**	**V1-T4-74**	**MB816B200BTS** ⑤⑥
200	None	OH/UG	10	4	8/16	CSR2200	BR	10	**V1-T4-46**	**V1-T4-74**	**MB816B200BTSCU** ④⑤⑥
200	Horn	OH/UG	10	5	8/16	BW2200	BR	11	—	—	**MB816B200STD** ⑦
200	None	OH/UG	②	4	8/16	Provision ③	BR	10	**V1-T4-46**	**V1-T4-74**	**MB816P200BTS** ⑤⑥
200	None	OH/UG	②	4	8/16	Provision ③	BR	10	**V1-T4-46**	**V1-T4-74**	**MB816P200BTSCU** ④⑤⑥
200	Horn	OH/UG	②	5	8/16	Provision ③	BR	11	**V1-T4-46**	**V1-T4-74**	**MB816P200STD** ⑥⑦
200	Horn	OH/UG	②	5	8/16	Provision ③	BR	10	**V1-T4-46**	**V1-T4-74**	**MB816P200BTSD** ⑥
200	None	OH/UG	10	4	12/12	CSR2200	CH	10	**V1-T4-44**	**V1-T4-70**	**CMB1212B200BTS** ④⑤⑥
200	None	OH/UG	②	4	6–2 Pole	Main lugs	CH	9	**V1-T4-45**	**V1-T4-71**	**CMB1212L200BTS** ④⑥
200	None	OH/UG	②	4	12/12	Provision ③	CH	10	**V1-T4-45**	**V1-T4-71**	**CMB1212P200BTS** ④⑤⑥
200	None	OH/UG	②	4	6–2 Pole	Main lugs	BR	9	**V1-T4-44**	**V1-T4-71**	**MB1212L200BTS** ⑥
200	None	OH/UG	22	4	24/24	CSR2200	CH	10	**V1-T4-44**	**V1-T4-74**	**CMB2424B200BTS** ④⑤
200	None	OH/UG	22	4	24/36	CSR2200	CH	10	**V1-T4-45**	**V1-T4-74**	**CMB2436B200BTS** ④
200	None	OH/UG	10	4	20/40	CSR2200	BR	10	**V1-T4-47**	**V1-T4-74**	**MB2040B200BTS** ④
200	None	OH/UG	②	4	20/40	Provision ③	BR	10	**V1-T4-47**	**V1-T4-74**	**MB2040P200BTS** ⑤
200	Horn	OH/UG	②	5	20/40	Provision ③	BR	11	**V1-T4-47**	**V1-T4-74**	**MB2040P200SD** ⑦
200	Horn	OH/UG	10	5	20/40	CSR2200	BR	10	**V1-T4-47**	**V1-T4-74**	**MB2040B200SD** ⑦
200	Lever	OH/UG	10	5	None	CSR2200	None	14	**V1-T4-45**	**V1-T4-73**	**CMBXB200BTS** ④
200	Lever	OH/UG	10	5	12/12	CSR2200	CH	14	**V1-T4-45**	**V1-T4-73**	**CMBX1212B200BTS** ④⑥
200	Lever	OH/UG	10	5	32/42	CSR2200	CH	14	**V1-T4-46**	**V1-T4-73**	**CMBX3242B200BTS** ④
200	Lever	OH/UG	10	5	None	Provision	None	14	**V1-T4-45**	**V1-T4-73**	**CMBXP200BTS** ④
200	Lever	OH/UG	10	5	12/12	Provision	CH	14	**V1-T4-45**	**V1-T4-73**	**CMBX1212P200BTS** ④⑥
200	Lever	OH/UG	10	5	32/42	Provision	CH	14	**V1-T4-46**	**V1-T4-73**	**CMBX3242P200BTS** ④
200	None	OH/UG	②	4	4/8	Provision	BR	21	**V1-T4-46**	**V1-T4-73**	**MBT48P200BTS** ⑥
200	None	OH/UG	22	4	4/8	CSR2200	BR	21	**V1-T4-46**	**V1-T4-73**	**MBT48B200BTS** ⑥

Notes

① See **Page V1-T4-68** for box details.
② Per installed main breaker rating.
③ When a provision for main is provided, order one of the main breakers listed on **Page V1-T4-43**. All panels are dual labeled to accept Types BW, CSR, CSH Main Breakers.
④ Copper bus.
⑤ One-piece cover on utility side, Florida approved.
⑥ Units come with feed-through lugs.
⑦ Xcel approved.

Main Breaker Selection Chart

Maximum Ampere Rating	Two-Pole Breaker Catalog Numbers			
	10 kAIC	25 kAIC	25 kAIC	35 kAIC
100	**BW2100**	**CSR2100**	**CSR2100N**	**CSH2100N**
125	**BW2125**	**CSR2125**	**CSR2125N**	**CSH2125N**
150	**BW2150**	**CSR2150**	**CSR2150N**	**CSH2150N**
200	**BW2200**	**CSR2200**	**CSR2200N**	**CSH2200N**
Load Side Lug Kit for BW and CSR Breakers ①			**MCBK225**	

Wiring Diagrams

Catalog Number—CMB3242B200BS

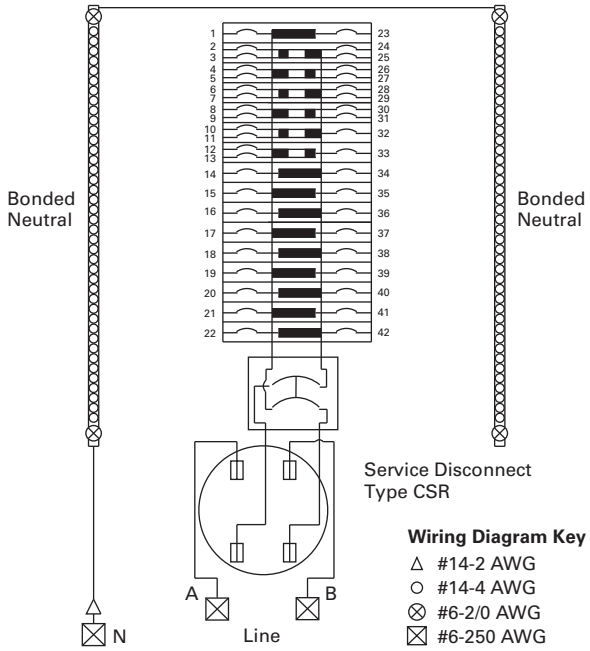

Catalog Numbers—CMBP200BTS, CMBB150BTS

Install 200 Ampere Maximum Service Disconnect Type CSR ②

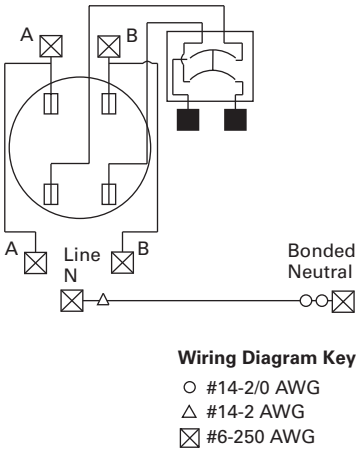

Catalog Number—CMB24L125BTS

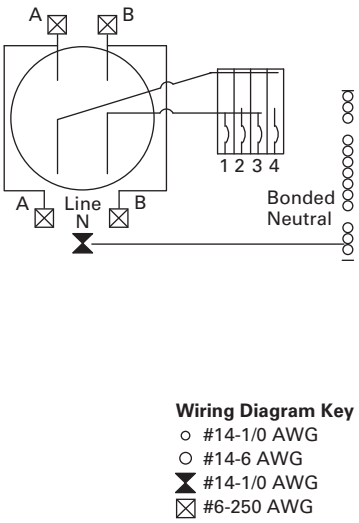

Notes

① When a provision for main is provided, order one of the main breakers listed in this table. All panels are dual labeled to accept Types BW, CSR and CSR Main Breakers.

② Factory-installed **MCBK225** Kit for C/B load lugs.

Catalog Numbers—CMB88B200BTS, CMB88B150BTS

Service Disconnect
Type CSR 200 Ampere Maximum

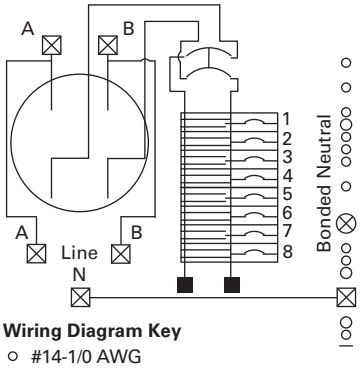

Wiring Diagram Key
- ○ #14-1/0 AWG
- ○ #14-6 AWG
- ⊗ #6-2/0 AWG
- ☒ #6-250 AWG
- ■ #4-300 AWG

Catalog Number—MB1212L200BTS

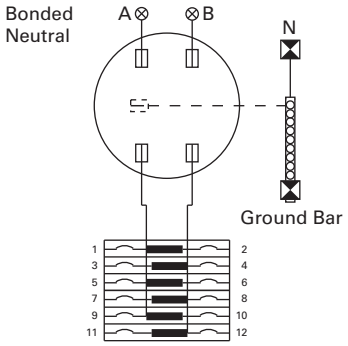

Wiring Diagram Key
- ○ #14-2/0 AWG
- ⊗ #6-350 kcmil
- ⧗ #6-300 kcmil

Catalog Number—MB48B200BTS

200 A Maximum
Service Disconnect
Type BW or CSR

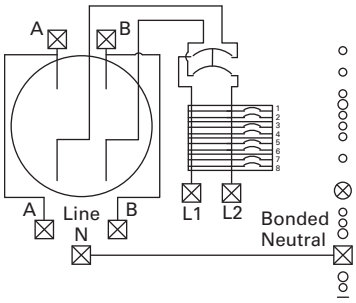

Wiring Diagram Key
- ○ #14-1/0 AWG
- ○ #14-6 AWG
- ⊗ #6-2/0 AWG
- ☒ #6-250 AWG

Catalog Number—CMB2424B200BTS

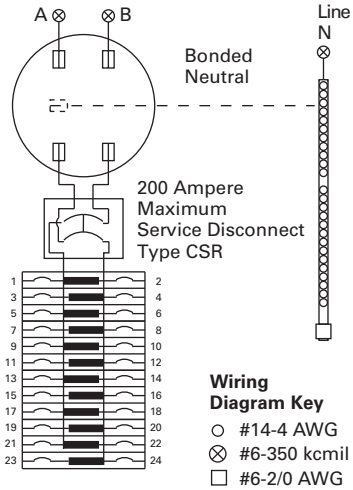

Wiring Diagram Key
- ○ #14-4 AWG
- ⊗ #6-350 kcmil
- □ #6-2/0 AWG
- ☒ #4-300 kcmil

Catalog Number—CMB1212B200BTS

5th Jaw Factory Installed
on CMB1212B200BTSD and
CMB1212P200BTSD Only

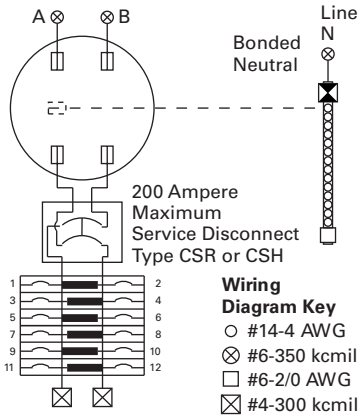

Wiring Diagram Key
- ○ #14-4 AWG
- ⊗ #6-350 kcmil
- □ #6-2/0 AWG
- ☒ #4-300 kcmil
- ⧗ #6-300 kcmil

Catalog Number—CMB1212L200BTS

5th Jaw Factory Installed
on CMB1212L200BTSD Only

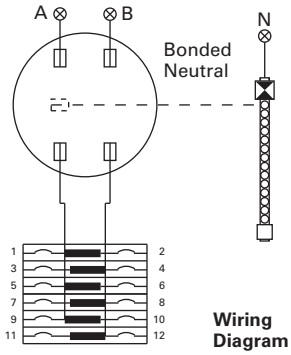

Wiring Diagram Key
- ○ #14-4 AWG
- ⊗ #6-350 kcmil
- □ #6-2/0 AWG
- ⧗ #6-300 kcmil

Catalog Numbers—MBP200SD, CMBXB200BTS, CMBXP200BTS

CMBXB200BTS &
CMBXP200BTS
included lever by
pass meter socket

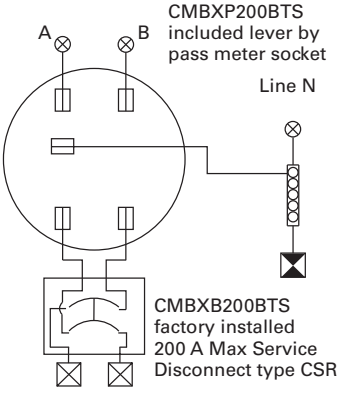

CMBXB200BTS
factory installed
200 A Max Service
Disconnect type CSR

MBP200SD
install 200 A Max
Service Disconnect
Type BW or CSR

Wiring
Diagram Key
- ○ #6-2/0 AWG
- ⊗ #6-350 kcmil
- ⊠ #1-300 kcmil
- ⧗ #6-300 kcmil

Catalog Number—CMB2436B200BTS

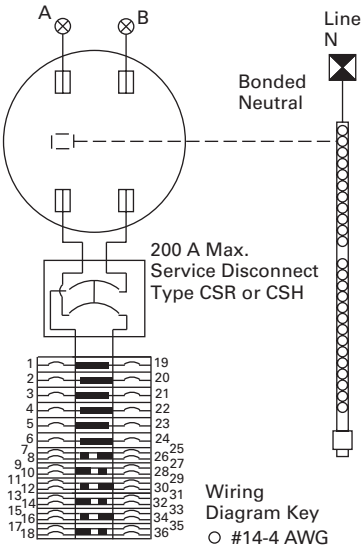

Wiring
Diagram Key
- ○ #14-4 AWG
- ⊗ #6-350 kcmil
- □ #6-2/0 AWG
- ⧗ #4-300 kcmil

Maximum of 12 twin
Breakers as Shown

Catalog Numbers—CMB1212B150BTS, CMBX1212B200BTS, CMB1212B200BTS, CMB1212P200BTS, CMBX1212P200BTS

5th Jaw Factory Installed
on CMB1212B200BTSD and
CMB1212P200BTSD Only

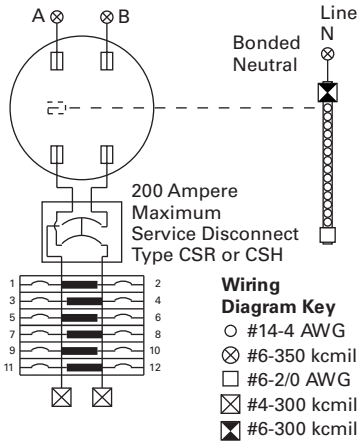

Wiring Diagram Key
- ○ #14-4 AWG
- ⊗ #6-350 kcmil
- □ #6-2/0 AWG
- ⊠ #4-300 kcmil
- ⧗ #6-300 kcmil

CMBX1212B200BTS &
CMBX1212P200BTS include
lever bypass meter socket

Catalog Numbers—MBT48B200BTS, MBT48P200BTS, MBT48B150BTS, MBT48P150BTS

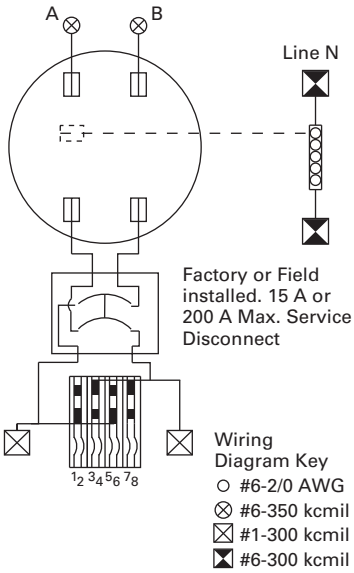

Catalog Numbers—MBB150BTSC, MBB150BTSCR, MBB200BTSCR and MBB200BTSC

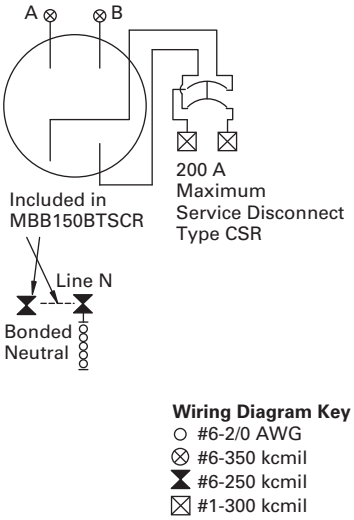

Catalog Numbers—CMBX3242P200BTS, CMBX3242B200BTS

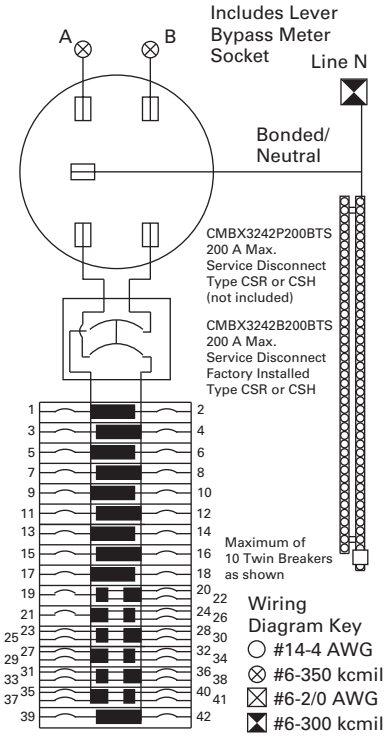

Catalog Numbers—MB816P200STD, MB816B200BTS, MB816B200BTSCU, MB816P200BTS, MB816P200BTSCU and MB816P200BTSD

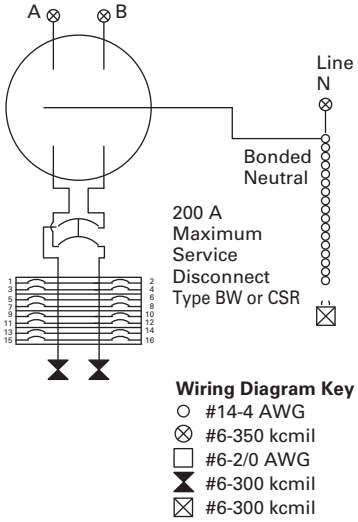

Catalog Numbers—MBB150BTS, MBP200SD, MBB200BTS, MBP200BTS, MBP200BTSD, CMBXB200BTS and CMBXP200BTS

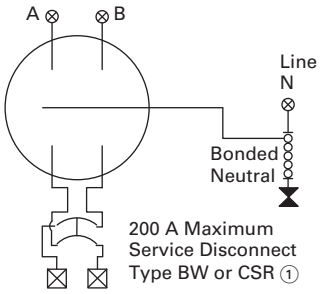

Wiring Diagram Key
- ○ #6-2/0 AWG
- ⊗ #6-350 kcmil
- ☒ #1-300 kcmil
- ⧗ #6-300 kcmil

Catalog Numbers—MB2040P200SD, MB2040B200BTS, MB2040P200BTS, MB2040B150SD and MB2040B200SD

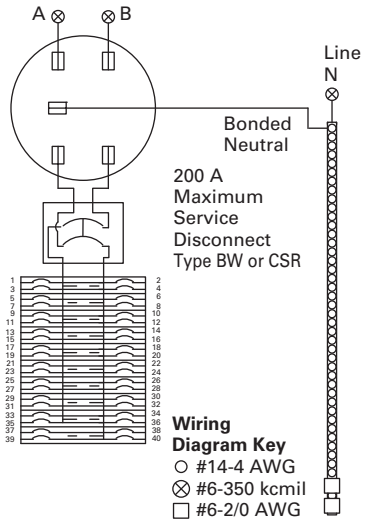

Residential Meter Breakers

Meets EUSERC Requirements Service Entrance Devices 100–225 A

Contents

Description	*Page*
Residential Meter Breakers	**V1-T4-37**
Non-EUSERC Combination Service Entrance Devices 100–200 A Styles	**V1-T4-39**
Meets EUSERC Requirements Service Entrance Devices 100–225 A	
West Coast All-In-One Design	**V1-T4-59**
Mechanical Interlock Cover	**V1-T4-65**
House Panels	**V1-T4-75**
Commercial Safety Sockets	**V1-T4-83**
CH Style Renovation Solutions	**V1-T4-86**
Aluminum Meter Breakers	**V1-T4-87**

Meets EUSERC Requirements Service Entrance Devices 100–225 A

Product Description

Eaton is proud to introduce a new line of West Coast/EUSERC Meter Breaker units. The new EUSERC devices complement the existing standard meter breaker devices. Customers who are interested in the complete meter breaker line of products can refer to Technical Data TD.31F.01.T.E.

Application Description

Eaton's line of EUSERC required devices adhere to the agreed upon standards. EUSERC utilities are predominately located in the western United States, but some eastern and midwestern utilities are also members. **These units can also be used in many Non-EUSERC areas.**

Features, Benefits and Functions

- Single-phase, three-wire, 120/240 V, 10 kAIC
- Larger 250 kcmil lugs and additional knockouts for ease of installation
- Box type main lugs are included
- Factory-installed neutrals
- Hub provisions on top endwall. If hubs are required, order "DS" type hubs
- Ring type sockets are provided with a sealing ring
- Padlockable device covers provide an additional measure of security and help prevent tampering
- Most units have center keyhole for easy one-person installation
- NEMA 3R rainproof construction

Catalog Number Selection

MBE 20 40 B 200 B S ____

Meter Breaker Type

MB	= 1-inch (25.4 mm) BR Type
MBE	= 1-inch (25.4 mm) BR Type—EUSERC
CMB	= 0.75-inch (19.1 mm) CH Type
CMBE	= 0.75-inch (19.1 mm) CH Type—EUSERC
MBED	= 7-inch (177.8 mm) deep
MBER	= 1-inch (25.4 mm) BR Type—EUSERC ranch
CMBER	= 0.75-inch (19.1 mm) CH Type—EUSERC ranch
MBEB	= 1-inch (25.4 mm) BR Type back-to-back
MBX	= Xcel approved lever bypass meter breaker

Spacing

Number of spaces

Poles

Maximum number of poles

Main

B = Main breaker included
P = Provision for main
L = Main lug

Amperes

Amperage of unit

Breaker Feed

BT = Bottom and top
B = Bottom only
T = Top only

Mounting

S = Surface
F = Flush/stucco

Accessories/Modifications

D = 5th jaw and horn bypass
CU = Copper
C = Single cover compact design
CR = Two cover compact design

Last Digits

G = Suffix = GA PWE spec
R ① = Suffix = ECCN renovation
PV = Suffix = PV rated units
6 = 2 x 6 construction
A = Aluminum enclosure

Note

① Not available in CR.

Product Selection

Note: See knockout drawings on **Pages V1-T4-68 through V1-T4-74** for hub information.

Combination Service Entrance Devices—EUSERC

Ampere Rating	By-pass	Service	kAIC	Jaws	Distribution	Main	Branch Breaker Type	Dimensions and Enclosure Shape ①	Page Numbers Wiring	Page Numbers Knockout ①	Catalog Number—Surface	Catalog Number—Flush
Ring Style Meter Mains (no distribution section included)												
125	None	OH/UG	②	4	2/4	MLO	BR	2	**V1-T4-55**	**V1-T4-70**	**MBE24L125BTS** ③	**MBE24L125BTF**
125	None	OH/UG	②	4	2/4	MLO	CH	2	**V1-T4-53**	**V1-T4-70**	**CMBE24L125BTS** ③④	—
150	None	OH/UG	22	4	None	CSR2150N	None	3	**V1-T4-52**	**V1-T4-70**	**CMBEB150BTS** ③④	—
200	None	OH/UG	10	4	None	CSR2200	None	3	**V1-T4-56**	**V1-T4-70**	**MBEB200BTS** ③	**MBEB200BTF**
200	None	OH/UG	22	4	None	CSR2200N	None	3	**V1-T4-52**	**V1-T4-70**	**CMBEB200BTS** ③④	—
200	None	OH/UG	②	4	2/4	MLO	BR	3	**V1-T4-56**	**V1-T4-70**	**MBE24L200BTS** ③	**MBE24L200BTF**
200	None	OH/UG	②	4	2/4	MLO	CH	3	**V1-T4-53**	**V1-T4-70**	**CMBE24L200BTS** ③④	—
Ring Style All-in-Ones (includes distribution section)												
100	None	OH/UG	10	4	12/24	BR2100	BR	2	**V1-T4-53**	**V1-T4-70**	**MBE1224B100BTS**	**MBE1224B100BTF**
100	None	UG	10	4	14/28	BR2100	BR	4	**V1-T4-55**	**V1-T4-69**	**MBE1428B100BS** ⑤	**MBE1428B100BF** ⑤
100	None	OH	10	4	12/24	BR2100	BR	9	**V1-T4-58**	**V1-T4-71**	**MBE1224B100TS**	—
125	None	OH/UG	10	4	12/24	BR2125	BR	2	**V1-T4-53**	**V1-T4-70**	**MBE1224B125BTS**	**MBE1224B125BTF**
125	None	OH	10	4	12/24	BR2125	BR	9	**V1-T4-58**	**V1-T4-71**	**MBE1224B125TS**	—
125	None	UG	10	4	18/36	BR2125	BR	5	**V1-T4-54**	**V1-T4-69**	—	**MBE1836B125BF** ⑤
150	None	OH/UG	10	4	4/8	CSR2150	BR	19	—	—	**MBER48B150BTS** ⑥⑦	—
150	None	OH/UG	22	4	8/8	CSR2150N	CH	19	—	—	**CMBER88B150BTS** ④⑥⑦	—
150	None	OH/UG	22	4	8	CSR2150N	CH	3	**V1-T4-53**	**V1-T4-70**	**CMBE88B150BTS** ④⑥	**CMBE88B150BTF** ④⑥
150	None	UG	22	4	32/42	CSR2150N	CH	7	**V1-T4-52**	**V1-T4-69**	**CMBE3242B150BS** ④⑤	—
150	None	UG	10	4	20/40	CSR2150	BR	6	**V1-T4-54**	**V1-T4-69**	—	**MBE2040B150BF** ⑤⑧

Notes

① See **Page V1-T4-68** for box details.
② Interrupting rating is dependent on the main breaker that is installed.
③ Reference drawing EUSERC DWG-301, G1.
④ Unit has copper bus.
⑤ Reference drawing EUSERC DWG-301/301A.
⑥ Units come with feed-through lugs.
⑦ Units include a two-pole provision for secondary main 70 A max. Type BR, BRH, BRHH.
⑧ Please use RH-Type hubs on top end wall for overhead feed.

Note: See knockout drawings on **Pages V1-T4-68 through V1-T4-74** for hub information.

Combination Service Entrance Devices—EUSERC, continued

Ampere Rating	By-pass	Service	kAIC	Jaws	Distribution	Main	Branch Breaker Type	Dimensions and Enclosure Shape ①	Page Numbers Wiring	Page Numbers Knockout ①	Catalog Number—Surface	Catalog Number—Flush
Ring Style All-in-Ones (includes distribution section), continued												
150	None	OH/UG	22	4	20/40	CSR2150	BR	—	**V1-T4-55**	—	**MBE2040B150BTS** ③	—
150	None	OH/UG	10	4	4/8	CSR2150	BR	3	**V1-T4-56**	**V1-T4-70**	**MBE48B150BTS**	—
200	None	OH/UG	10	4	4/8	CSR2200	BR	3	**V1-T4-56**	**V1-T4-70**	**MBE48B200BTS** ④	**MBE48B200BTF** ④
200	None	OH/UG	22	4	8	CSR2200N	CH	3	**V1-T4-53**	**V1-T4-70**	**CMBE88B200BTS** ④⑤	**CMBE88B200BTF** ④⑤
200	None	OH/UG	10	4	8	CSR2200	BR	3	**V1-T4-56**	**V1-T4-70**	**MBE88B200BTS**	—
200	None	OH/UG	10	4	4/8	CSR2200	BR	19	**V1-T4-58**	**V1-T4-73**	**MBER48B200BTS** ④⑥	—
200	None	OH/UG	10	4	4/8	CSR2200	BR	19	**V1-T4-58**	**V1-T4-73**	**MBER48B200BTS** ④⑥	—
200	None	OH/UG	②	4	8/16	Provision	BR	10	**V1-T4-57**	**V1-T4-71**	**MBE816P200TSCU** ③⑤	—
200	None	OH	②	4	8/16	Provision	BR	10	**V1-T4-57**	**V1-T4-71**	**MBE816P200TS** ③④	—
200	None	UG	②	4	6–2 Pole	Main Lug	CH	5	**V1-T4-52**	**V1-T4-69**	**CMBE1212L200BS** ⑤⑦	**MBE1212L200BTF** ⑦
200	None	OH/UG	②	4	6–2 Pole	Main Lug	BR	9	**V1-T4-57**	**V1-T4-69**	**MBE1212L200BTS**	—
200	None	OH	10	4	20/40	CSR2200	BR	10	**V1-T4-57**	**V1-T4-71**	**MBE2040B200TS** ③	**MBE2040B200TF** ⑧
200	None	UG	10	4	20/40	CSR2200	BR	6	**V1-T4-54**	**V1-T4-69**	**MBE2040B200BS** ③	**MBE2040B200BF** ⑧
200	None	OH/UG	22	4	20/40	CSR2200	BR	—	**V1-T4-55**	—	**MBE2040BH200BTS** ③	—
200	None	OH/UG	22	4	20/40	CSR2200	BR	—	**V1-T4-55**	—	**MBE2040BH200BTF** ③	—
200	None	UG	22	4	30/42	CSR2200	BR	7	**V1-T4-54**	—	—	**MBE3042B200BF**
200	None	UG	22	4	32/42	CSR2200N	CH	7	**V1-T4-52**	**V1-T4-69**	**CMBE3242B200BS** ⑤⑦	**CMBE3242B200BF** ⑤⑦
200	None	UG	22	4	40	CSR2200	BR	12	**V1-T4-58**	—	**MBE4040B200BSH** ③⑦	—
200	None	OH/UG	22	4	40	CSR2200	BR	12	**V1-T4-58**	—	**MBE4040B200BTS**	**MBE4040B200BTF** ⑨
200	None	OH/UG	22	4	42	CSR2200N	CH	12	**V1-T4-57**	—	**CMBE4242B200BTS** ⑤	—
200	None	OH/UG	10	4	20/40	CSR2200	BR	18	**V1-T4-55**	**V1-T4-73**	**MBE2040B200BTS** ③	**MBE2040B200BTF** ③
225	None	OH/UG	10	4	20/40	CSR2225	BR	18	**V1-T4-58**	**V1-T4-73**	**MBE2040B225BTS** ③	**MBE2040B225BTF** ③
225	None	UG	22	4	30/42	CSR2225	BR	7	**V1-T4-55**	—	—	**MBE3042B225BF** ⑦
225	None	UG	22	4	32/42	CSR2225N	CH	7	**V1-T4-52**	**V1-T4-69**	**CMBE3242B225BS** ⑤⑦	**CMBE3242B225BF** ⑤⑦

Notes

① See **Page V1-T4-68** for box details.
② Interrupting rating is dependent on the main breaker that is installed.
③ Please use RH-Type hubs on top end wall for overhead feed.
④ Units come with feed-through lugs.
⑤ Unit has copper bus.
⑥ Semi-flush flange, not full stucco flange.
⑦ Reference drawing EUSERC DWG-301/301A.
⑧ When a provision for main is provided, order one of the main breakers listed on **Page V1-T4-68**. All panels are dual labeled to accept Types BW or CSR Main Breakers.
⑨ Includes factory-mounted 2.50-inch hub on bottom endwall. UG feed only.

Wiring Diagrams

Catalog Numbers—CMBE3242B150BS, CMBE3242B200BS, CMBE3242B200BF, CMBE3242B225BS and CMBE3242B225BF

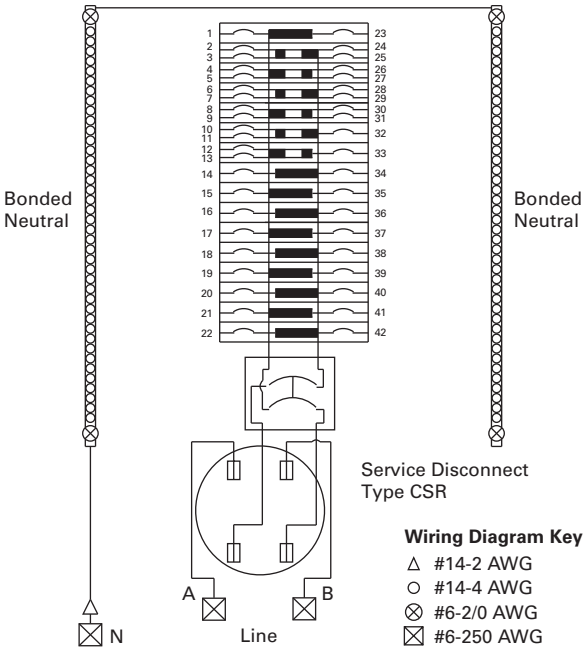

Catalog Number—CMBE1212L200BS

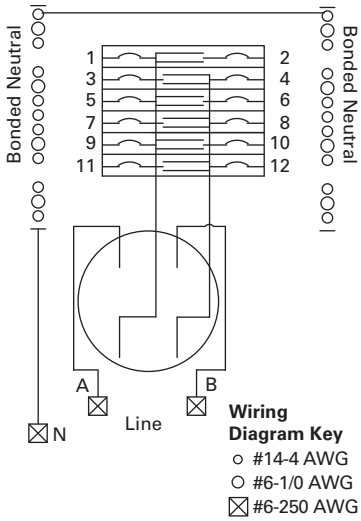

Catalog Numbers—CMBE2222P125BF and CMBE2222P125BS

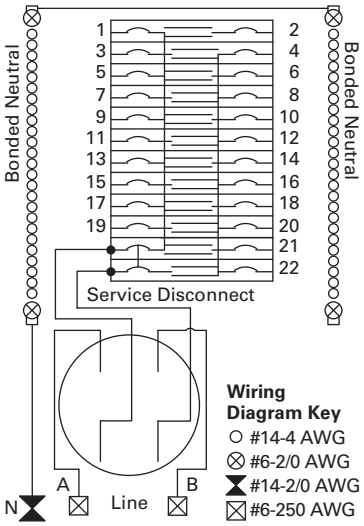

Catalog Numbers—CMBEB150BTS and CMBEB200BTS

Install 200 Ampere Maximum Service Disconnect Type CSR ②

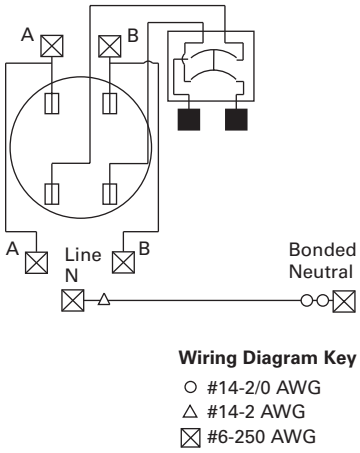

Note

① Factory-installed **MCBK225** kit for C/B load lugs.

Catalog Number—CMBE24L125BTS

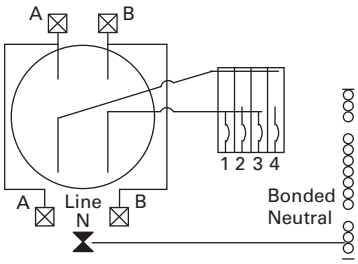

Wiring Diagram Key
- ○ #14-1/0 AWG
- ○ #14-6 AWG
- ⧗ #14-1/0 AWG
- ☒ #6-250 AWG

Catalog Numbers—CMBE88B200BTS, CMBE88B200BTF, CMBE88B150BTS and CMBE88B150BTF

Service Disconnect
Type CSR 200 Ampere Maximum

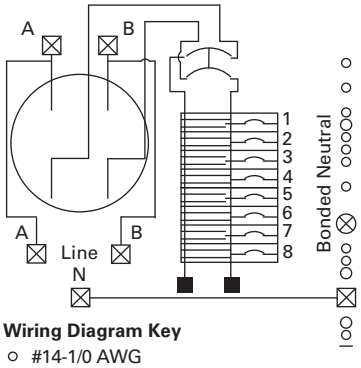

Wiring Diagram Key
- ○ #14-1/0 AWG
- ○ #14-6 AWG
- ⊗ #6-2/0 AWG
- ☒ #6-250 AWG
- ■ #4-300 AWG

Catalog Number—CMBE24L200BTS

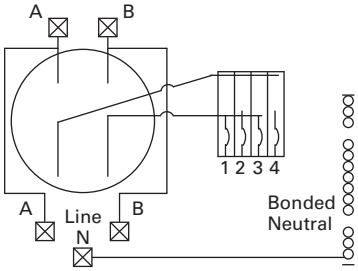

Wiring Diagram Key
- ○ #14-6 AWG
- ○ #14-1/0 AWG
- ☒ #6-250 AWG

Catalog Numbers—MBE1224B100BTS, MBE1224B100BTF, MBE1224B125BTS and MBE1224B125BTF

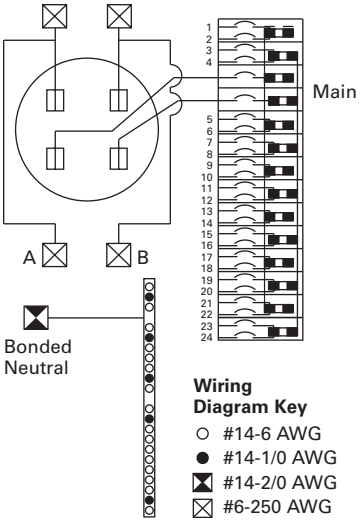

Wiring Diagram Key
- ○ #14-6 AWG
- ● #14-1/0 AWG
- ⧗ #14-2/0 AWG
- ☒ #6-250 AWG

Catalog Numbers—MBE2040B150BF, MBE2040B200BS and MBE2040B200BF

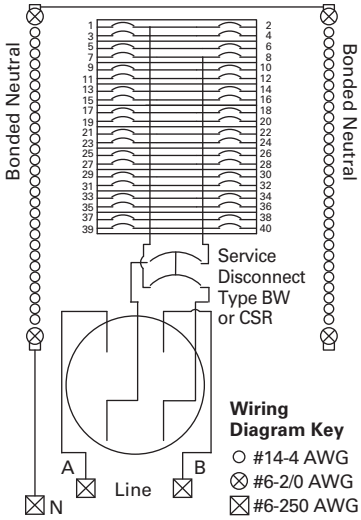

Catalog Numbers—MBE1212L200BF and MBE1212L200BS

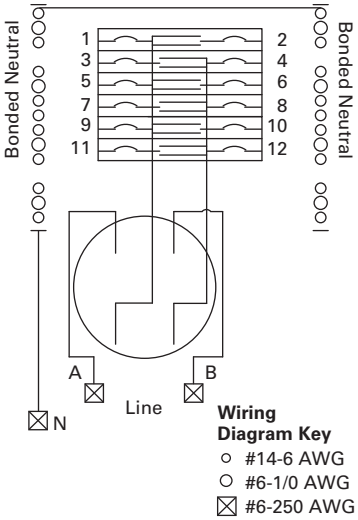

Catalog Number—MBE1836B125BF

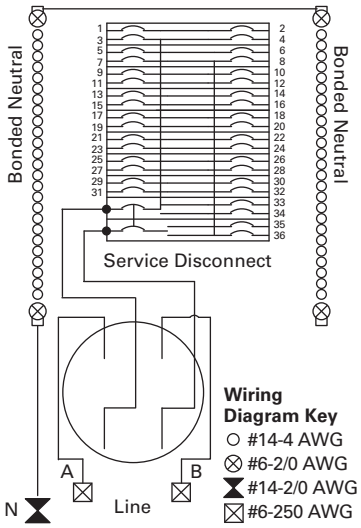

Catalog Number—MBE3042B200BF

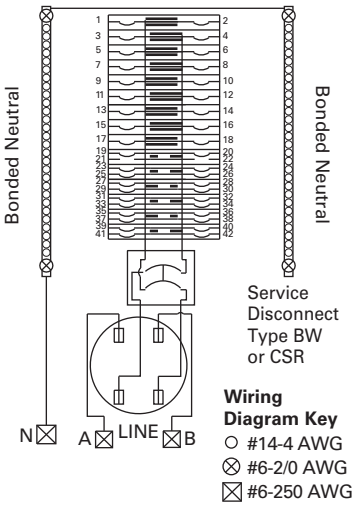

Catalog Numbers—MBE1428B100BS and MBE1428B100BF

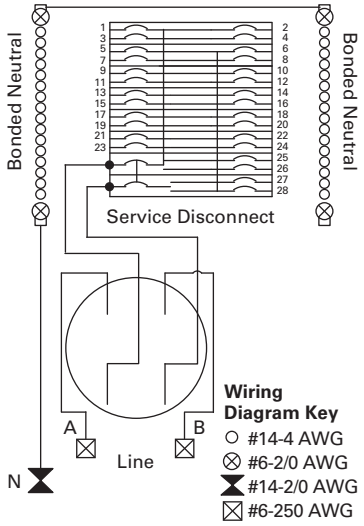

Catalog Number—MBE3042B225BF

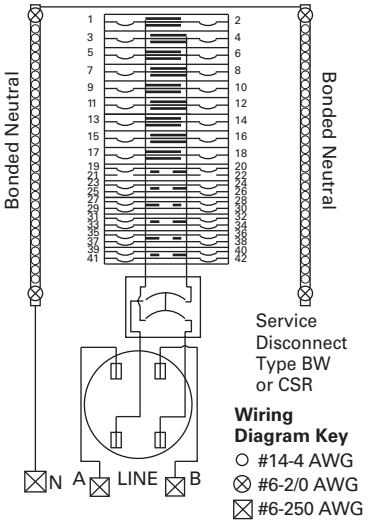

Catalog Numbers—MBE2040B200BTS, MBE2040B150BTS, MBE2040BH200BTS and MBE2040BH200BTF

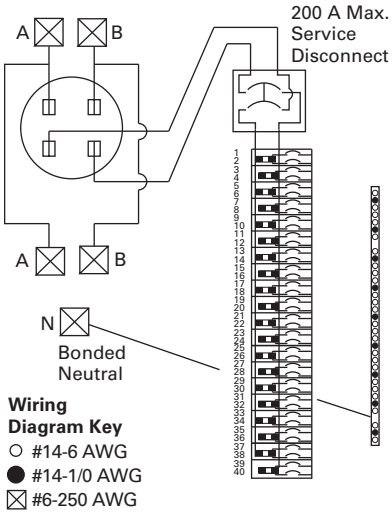

Catalog Numbers—MBE24L125BTS and MBE24L125BTF

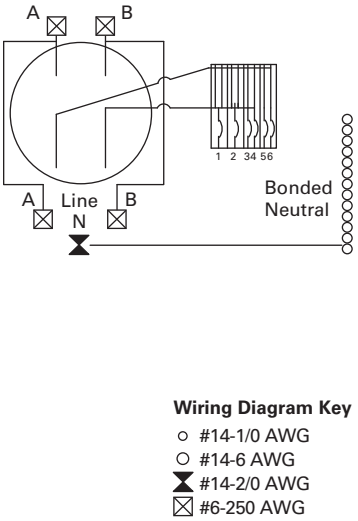

Catalog Numbers—MBE48B150BTS, MBE48B200BTS, MBE48B200BTF

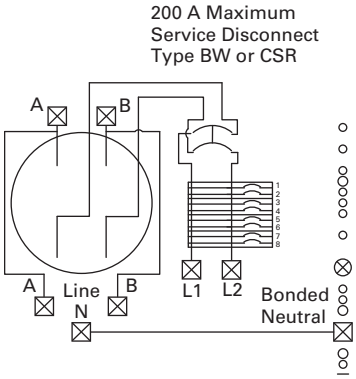

Wiring Diagram Key
- ○ #14-1/0 AWG
- ○ #14-6 AWG
- ⊗ #6-2/0 AWG
- ⊠ #6-250 AWG

Catalog Numbers—MBE24L200BTS and MBE24L200BTF

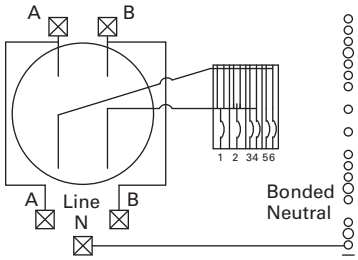

Wiring Diagram Key
- ○ #14-1/0 AWG
- ○ #14-6 AWG
- ⧗ #14-2/0 AWG
- ⊠ #6-250 AWG

Catalog Numbers—MBEB200BTS and MBEB200BTF

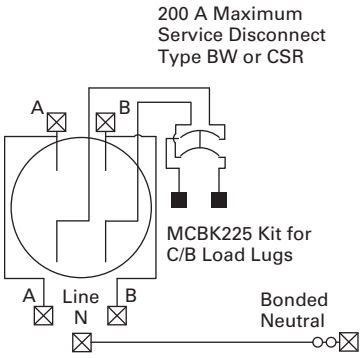

Wiring Diagram Key
- ○ #14-2/0 AWG
- ⊗ #6-2/0 AWG
- ⊠ #6-250 AWG

Catalog Number—MBE88B200BTS

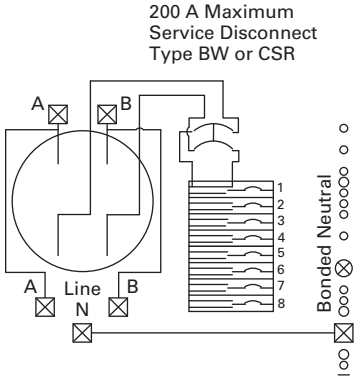

Wiring Diagram Key
- ○ #14-1/0 AWG
- ○ #14-6 AWG
- ⊗ #6-2/0 AWG
- ⊠ #6-250 AWG

Catalog Numbers—MBE816P200TS and MBE816P200TSCU

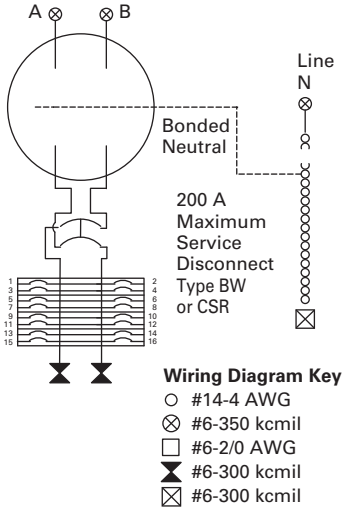

Catalog Number—MBE1212L200BTS

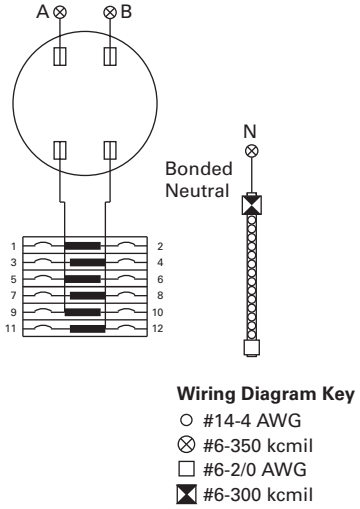

Catalog Numbers— MBE2040B200TS and MBE2040B200TF

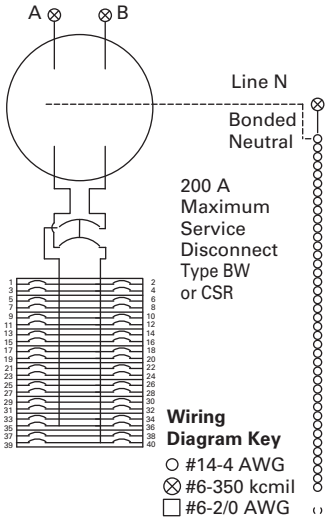

Catalog Number—CMBE1212L200TS

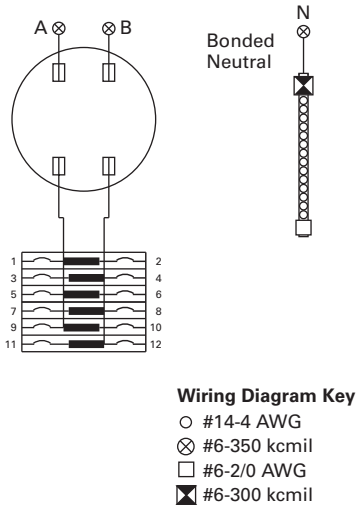

Catalog Number—MBE1212L200BTS

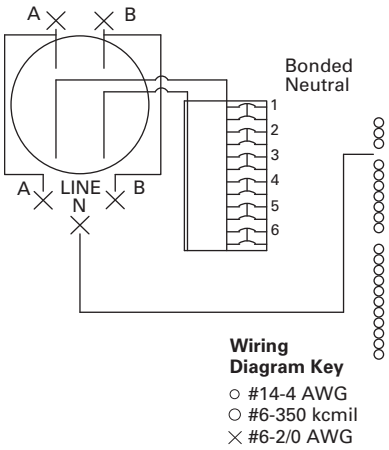

Catalog Number—CMBE4242B200BTS

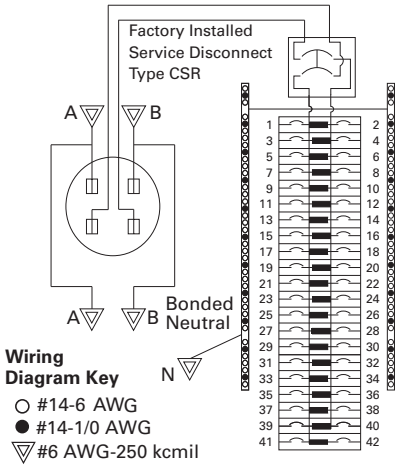

Catalog Numbers—CMBER88B200BTS and CMBER88B200BTF

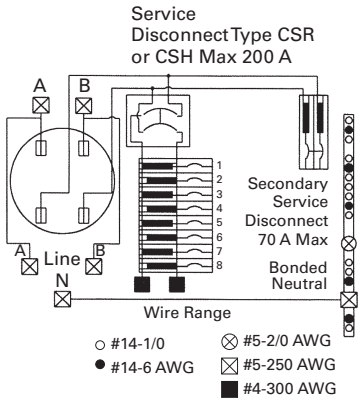

Catalog Numbers—MBE2040B225BTS, MBE2040B225BTF

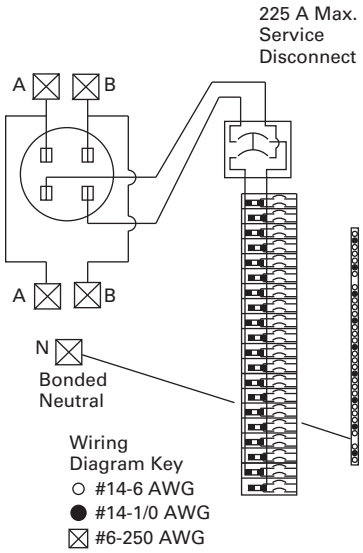

Catalog Numbers—MBE4040B200BTS and MBE4040B200BSH

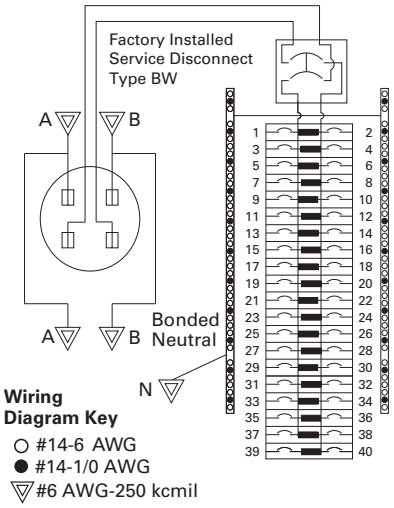

Catalog Numbers—MBE1224B125TS and MBE1224B100TS

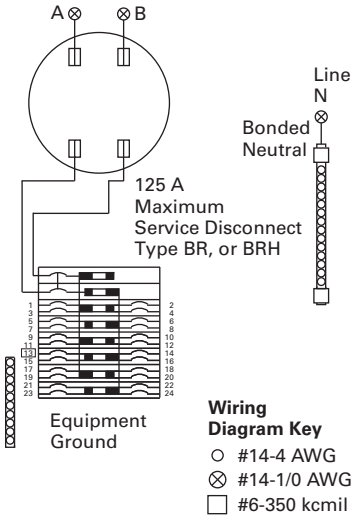

Catalog Numbers—MBER48B200BTS and MER48B200BTF

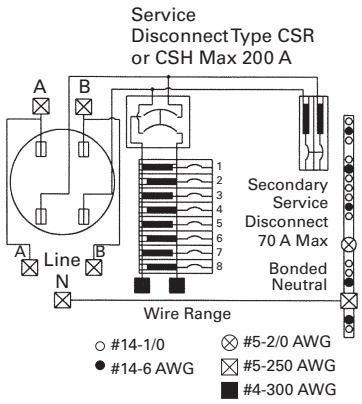

West Coast All-In-One Design

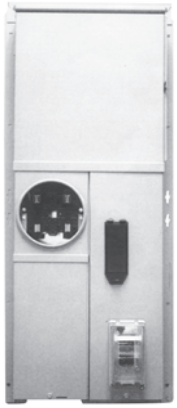

Contents

Description	*Page*
Residential Meter Breakers	**V1-T4-37**
Non-EUSERC Combination Service Entrance Devices 100–200 A Styles	**V1-T4-39**
Meets EUSERC Requirements Service Entrance Devices 100–225 A.	**V1-T4-48**
West Coast All-In-One Design	
Mechanical Interlock Cover	**V1-T4-65**
House Panels	**V1-T4-75**
Commercial Safety Sockets	**V1-T4-83**
CH Style Renovation Solutions	**V1-T4-86**
Aluminum Meter Breakers	**V1-T4-87**

West Coast All-In-One Design

Product Description

A metering device that may contain a meter socket, main breaker and distribution section within the same enclosure.

Features, Benefits and Functions

- Semi-flush mounting. 7-inch design ideal for stucco homes
- Endwall knockouts are easily accessible for future wiring without damaging stucco
- Knockout in back of case for mounting car-charging receptacle in garage (meets future electric car requirements)
- Outboard split neutral for easy wiring
- Commercial grade main breaker
- Value-added kits available: Hub adapter plate

Product Selection

MBED3042B200BF

7-Inch Deep Meter Breaker—Standard Design OH/NG ①

Ampere Rating	Bypass	Service	kAIC	Jaws	Distribution	Main	Branch Breaker Type	Catalog Number—Flush	Factory-Installed Kits
100	None	UG	10	4	18/36	BW2100	BR	**MBED1836B100BF**	—
125	None	UG	10	4	18/36	BW2125	BR	**MBED1836B125BF**	—
200	None	UG	10	4	20/40	BW2200	BR	**MBED2040B200BF**	—
200 ②	None	UG	10	4	20/40	BW2200	BR	**MBED2040B200BFN**	—
200	None	UG	10	4	30/42	BW2200	BR	**MBED3042B200BF**	—
225	None	UG	10	4	20/40	BW2225	BR	**MBED2040B225BF**	—
225 ②	None	UG	10	4	20/40	BW2225	BR	**MBED2040B225BFN**	—
225	None	UG	10	4	30/42	BW2225	BR	**MBED3042B225BF**	—

Accessories

Hub Adapter Plate

Description	Catalog Number
Hub adapter plate	**MBEDADPT**

Notes

① Reference drawing EUSERC DWG-301A, G1

② Main Breaker Bus connected to 20/40 distribution. Main and Disconnect in same compartment.

Wiring Diagrams

Typical Wiring Diagram for Catalog Numbers MBED3042B200BF, MBED3042B225BF, MBED3042BH200BF

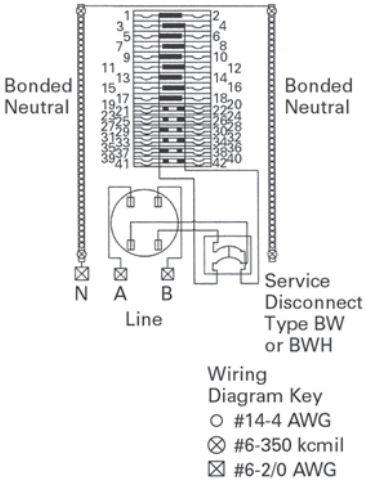

Typical Wiring Diagram for Catalog Numbers MBED2040B200BFN, MBED2040B225BFN

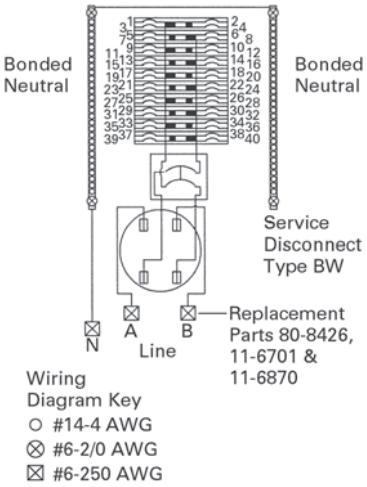

Typical Wiring Diagram for Catalog Numbers MBED1836B100BF, MBED1836B125BF

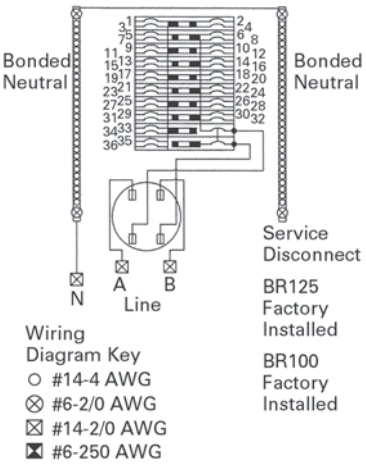

Typical Wiring Diagram for Catalog Numbers MBED2040B200BF, MBED2040B225BF, MBED2040BH200BF, MBED2040BH225BF

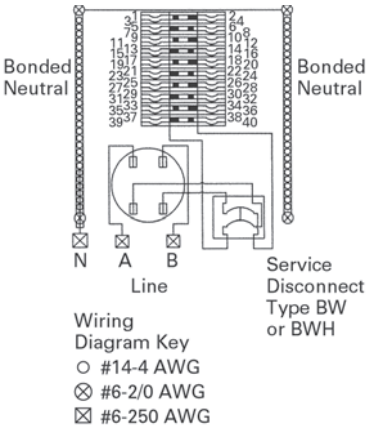

Typical Wiring Diagram for Catalog Numbers MBEB2003040BB and MBEB2253040BB

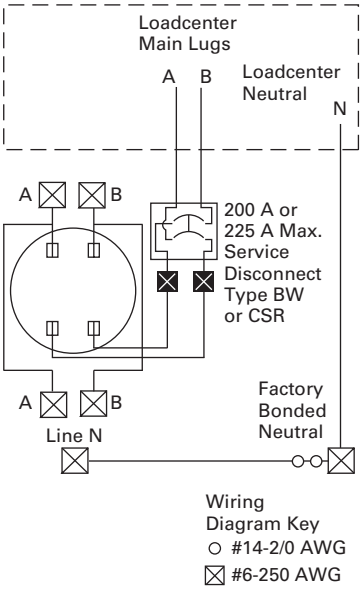

Dimensions and Knockouts

Approximate Dimensions in Inches (mm)

7-Inch Deep Meter Breaker

Catalog Number—Flush	Height	Width	Depth
MBED1836B100BF	38.00 (965.2)	14.19 (360.4)	7.00 (177.8)
MBED1836B125BF	38.00 (965.2)	14.19 (360.4)	7.00 (177.8)
MBED2040B200BF	38.00 (965.2)	14.19 (360.4)	7.00 (177.8)
MBED2040B200BFN	42.50 (1079.5)	14.19 (360.4)	7.00 (177.8)
MBED3042B200BF	42.50 (1079.5)	14.19 (360.4)	7.00 (177.8)
MBED2040B225BF	38.00 (965.2)	14.19 (360.4)	7.00 (177.8)
MBED2040B225BFN	42.50 (1079.5)	14.19 (360.4)	7.00 (177.8)
MBED3042B225BF	42.50 (1079.5)	14.19 (360.4)	7.00 (177.8)

Approximate Dimensions in Inches (mm)

Catalog Numbers MBED2040B200BFN, MBED20408225BFN, MBED3042B200BF, MBED3042B225BF, MBED2040B200BF, MBED2040B225BF, MBED1836B100BF, MBED1836B125BF

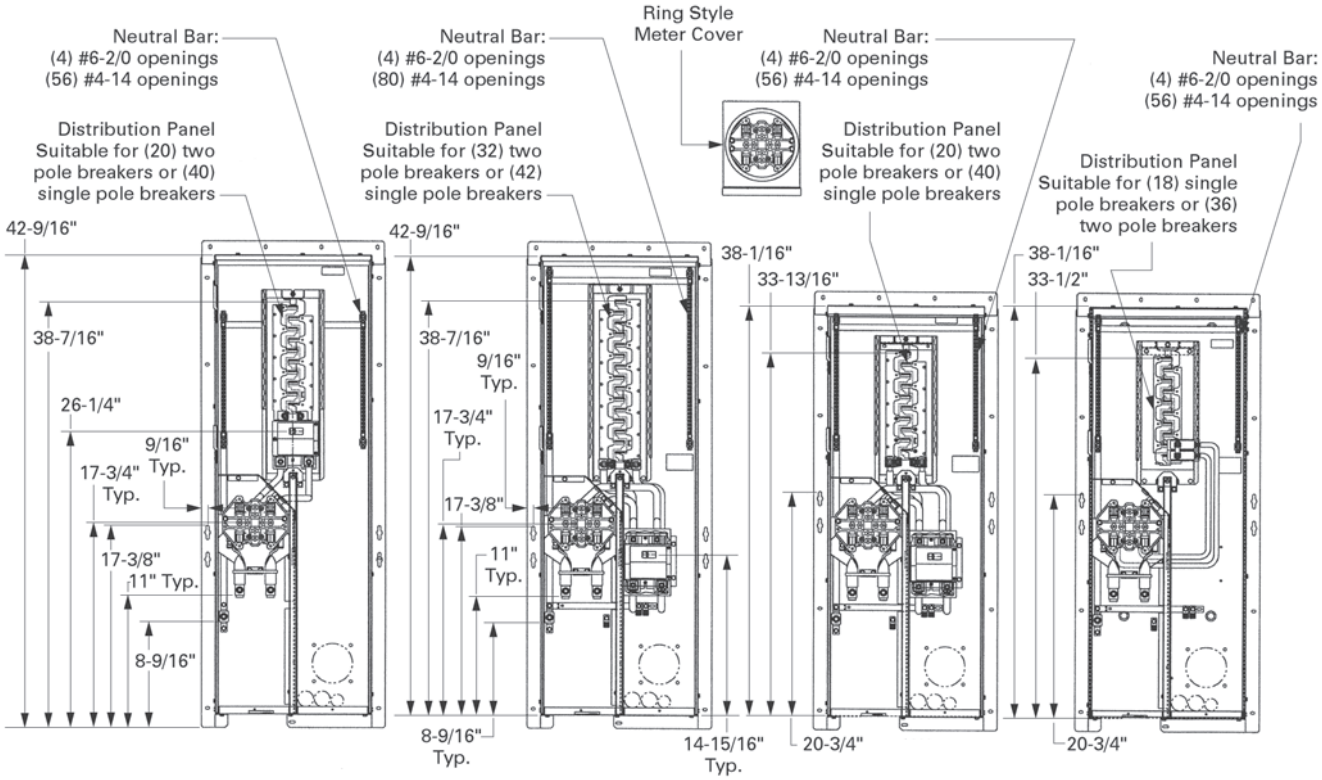

Knockout Configurations and Dimensions for MBED2040B200BFN, MBED20408225BFN, MBED3042B200BF, MBED3042B225BF, MBED2040B200BF, MBED2040B225BF, MBED1836B100BF, MBED1836B125BF

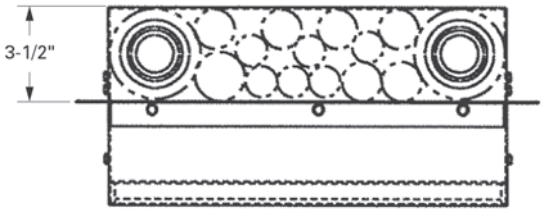

Top Endwall

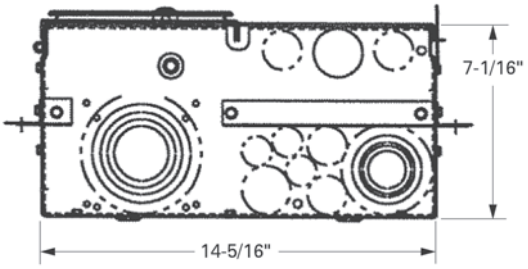

Bottom Endwall

Approximate Dimensions in Inches (mm)

Catalog Numbers MBEB2003040BB, MBEB2253040BB

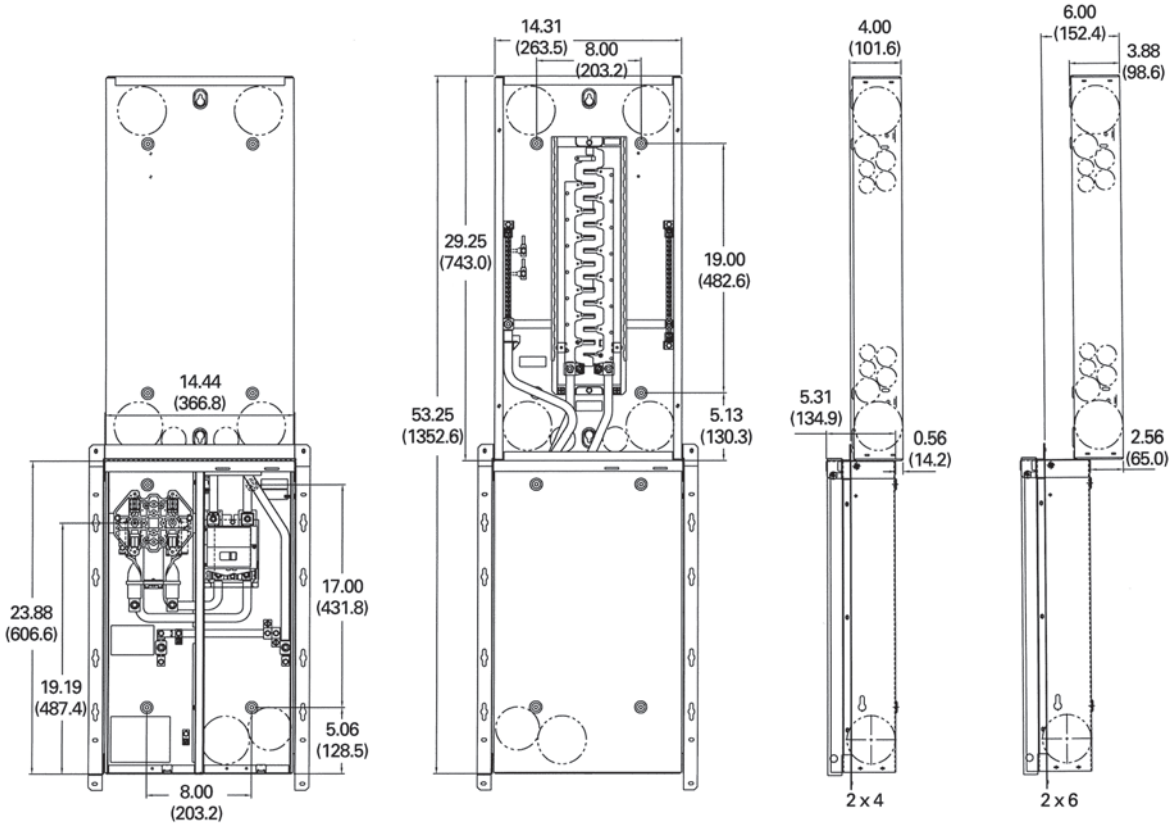

Knockout Configurations for MBEB2003040BB, MBEB2253040BB

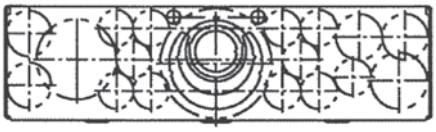

Top Endwall

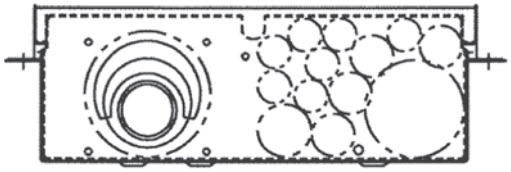

Bottom Endwall

Mechanical Interlock Cover

Meter Breaker with Interlock Cover

Contents

Description	*Page*
Residential Meter Breakers	**V1-T4-37**
Non-EUSERC Combination Service Entrance Devices 100–200 A Styles	**V1-T4-39**
Meets EUSERC Requirements Service Entrance Devices 100–225 A.	**V1-T4-48**
West Coast All-In-One Design	**V1-T4-59**
Mechanical Interlock Cover	
House Panels	**V1-T4-75**
Commercial Safety Sockets	**V1-T4-83**
CH Style Renovation Solutions	**V1-T4-86**
Aluminum Meter Breakers	**V1-T4-87**

Mechanical Interlock Cover

Product Description

Covers mechanically interlock two breakers. Covers interlock main breaker with two-pole breaker mounted in the distribution section of the meter breakers.

Product Selection

Meter Breaker with Interlock Cover

Mechanical Interlock Cover

Mechanical Interlock Deadfront	Meter Breaker Catalog Number
MBDF1M	**CMB1212B200BTS**
	CMB1212B200BTSD
	CMB1212P200BTS
	CMB1212P200BTSD
MBDF2M	**MB816B200BTS**
	MB816B200BTSCU
	MB816P200BTS
	MB816P200BTSCU
	MB816P200STD
MBDF3M	**MB2040B200BTS**
	MB2040P200BTS
	MB2040P200SD
MBDF4M	**MBE816P200TS**
	MBE816P200TSCU
MBDF5M	**MBE2040B150BF**
	MBE2040B150BS
	MBE2040B200BF
	MBE2040B200BS
MBDF6M	**MBE2040B200TF**
	MBE2040B200TS
	MBE2040P200TF
	MBE2040P200TS
MBDF7M	**CMBE3242B150BF**
	CMBE3242B150BS
	CMBE3242B200BF
	CMBE3242B200BS
	CMB3242B150BS
	CMB3242B200BS
MBDF8M	**CMBE4242B200BSH**
	CMBE4242B200BTF
	CMBE4242B200BTS
MBDF9M	**MBE4040B200BSH**
	MBE4040B200BSHH
	MBE4040B200BTF
	MBE4040B200BTS

Mechanical Interlock Deadfront	Meter Breaker Catalog Number
MBDF1AM	**CMB2424M200BTS**
MBDF10M	**CMB24B200TFR**
	CMB24B200TSR
MBDF11M	**CMBXB200BTS**
	CMBXP200BTS
MBDF12M	**CMBX3242B200BTS**
	CMBX3242P200BTS
MBDF13M	**MBE3042B200BF**
	MBE3042B225BF
MBDF14M	**CMBE88B150BTF**
	CMBE88B150BTS
	CMBE88B200BTF
	CMBE88B200BTS
	CMB88B150BTS
	CMB88B200BTS
MBDF15M	**MBE48B150BTF**
	MBE48B150BTS
	MBE48B200BTF
	MBE48B200BTS
MBDF16M	**MBE88B150BTF**
	MBE88B150BTS
	MBE88B200BTF
	MBE88B200BTS
MBDF17M	**MBE2040BC200BTS**
	MBE2040BH200BTF
	MBE2040BH200BTS
	MBE2040B150BTF
	MBE2040B150BTS
	MBE2040B200BTF
	MBE2040B200BTS
	MBE2040B200BTSV
	MBE2040B225BTF
	MBE2040B225BTS

Technical Data and Specifications

Meter Breaker Parts ①

Description	Catalog Number
5th Jaw Kits	
Compact and standard styles (MB and CMB)	**MB5JAWKIT**
EUSERC style	**IMM5JKOP** ②
Horn Bypass Kits	
Ringless Style units only (MB and CMB)	**MBHBPKIT**

Hub Selection Chart

Hub Size Dimensions in Inches (mm)	Catalog Number
1.00 (25.4)	**DS100H2**
1.25 (31.8)	**DS125H2**
1.50 (38.1)	**DS150H2**
2.00 (50.8)	**DS200H2**
2.50 (63.5)	**DS250H2**
3.00 (76.2)	**DS300H2**

Top Endwall (Surface)

Hub Provision Catalog Number	
DS100H2	
DS125H2	
DS150H2	
DS200H2	
DS250H2	
DS300H2	
DS900AP	(Adapter Plate if using DS___H1 hubs only) ③

Wire Size Chart

Main	Wire Size Range Cu/Al 60 °C or 75 °C for Line Terminals
BR250	#14–4 kcmil
BR260	#4–1/0 kcmil
BR270	#4–1/0 kcmil
BR280	#4–1/0 kcmil
BR290	#4–1/0 kcmil
BR2100	#4–1/0 kcmil
BW2125	#2–300 kcmil
BW2150	#2–300 kcmil
BW2200	#2–300 kcmil
CSR2125	#2–300 kcmil
CSR2150	#2–300 kcmil
CSR2200	#2–300 kcmil
CSR2125N	#1/0–250 kcmil
CSR2150N	#1/0–250 kcmil
CSR2200N	#1/0–250 kcmil
125 A main lugs	—
200 A main lugs	—
MCBK225	#2–300 kcmil

Wire Size is Determined by the Circuit Breaker Installed in the Enclosure

Wire/Application	Maximum Wire Size	Ampere Rating
Aluminum—Standard	250 kcmil	200
Aluminum—Service Entrance	250 kcmil	225
Copper—Standard and Service Entrance	250 kcmil	225

Notes

① For breakers under 70 A used in backfed applications, add "B" to the end of the catalog string to get the appropriate "hold-down" version.

② Reference drawing EUSERC DWG-G1.

③ Use when DS H1 Type 1, 1.25 and 1.50-inch hubs are needed.

Use DS...H2 hubs for bottom endwalls (for all units). Use RH hubs for top endwalls on semi-flush units. Use DS...H2 hubs for top endwalls on surface devices.

Dimensions and Knockouts

Approximate Dimensions in Inches (mm)

Box Styles—Five Different Styles (Shapes) of Product

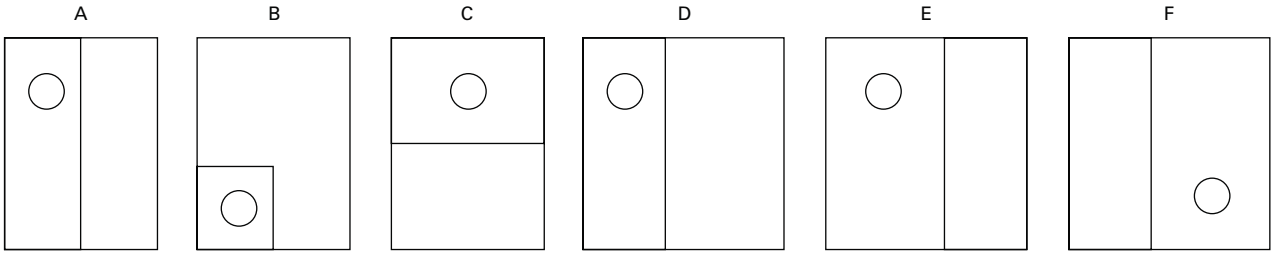

Box Dimensions

Box Number	Height	Width	Depth	Box Style
1	12.50 (317.5)	14.44 (366.7)	4.00 (101.6)	A
2	23.88 (606.4)	14.44 (366.7)	5.38 (136.5)	A
3	28.38 (720.7)	14.44 (366.7)	5.38 (136.5)	A
4	34.13 (866.8)	14.44 (366.7)	5.38 (136.5)	B
5	36.13 (917.6)	14.44 (366.7)	5.38 (136.5)	B
6	43.38 (1101.7)	14.44 (366.7)	5.38 (136.5)	B
7	46.88 (1190.6)	14.44 (366.7)	5.38 (136.5)	B
8	19.75 (501.7)	7.50 (190.5)	4.00 (101.6)	C
9	25.00 (635.0)	14.44 (366.7)	5.38 (136.5)	C
10	32.38 (822.3)	14.44 (366.7)	5.38 (136.5)	C
11	36.63 (930.3)	14.44 (366.7)	5.38 (136.5)	C
12	34.38 (873.1)	22.00 (558.8)	5.38 (136.5)	D
13	19.75 (501.7)	14.44 (366.7)	5.38 (136.5)	E
14	39.91 (1013.7)	14.44 (366.7)	5.38 (136.5)	C
15	23.88 (606.6)	13.00 (330.2)	4.94 (125.5)	F
16	28.38 (720.9)	13.00 (330.2)	4.94 (125.5)	F
17	34.19 (868.4)	22.13 (562.1)	5.00 (127.0)	D
18	36.06 (915.9)	16.63 (422.4)	5.50 (139.7)	A
19	28.38 (720.9)	14.44 (366.8)	4.94 (125.5)	A
20	32.06 (814.3)	14.44 (366.8)	4.94 (125.5)	C
21	25.50 (647.7)	14.44 (366.8)	4.94 (125.5)	C

Approximate Dimensions in Inches (mm)

Knockouts for Stucco and Surface Units Catalog Numbers—CMBE3242B200BF, CMBE3242B225BF, MBE2040B200BF, MBE2040B150BF, MBE1428B100BF, MBE1212L200BTF, MBE1836B125BF and MBE1212L200BTS

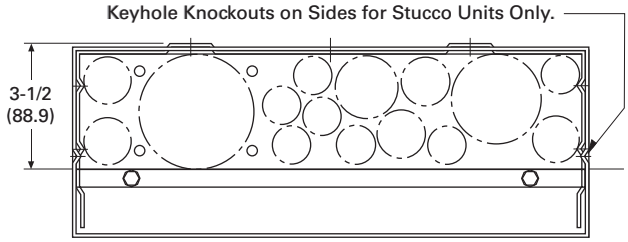

Top Stucco

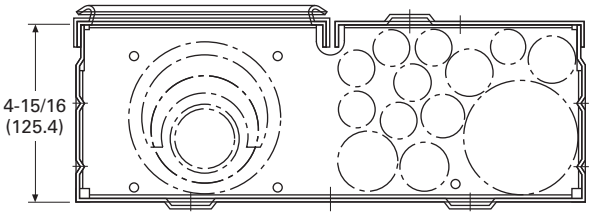

Bottom

Knockouts for Stucco and Surface Units Catalog Numbers—CMBE3242B150BS, CMBE3242B200BS, CMBE3242B225BS, CMBE1212L200BS, MBE2040B200BS, MBE1428B100BS, MBE1212L200BTS, CMB3242B150BS and CMB3242B200BS

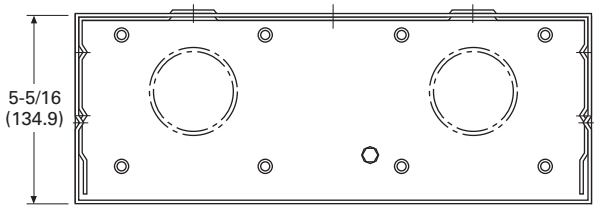

Top Surface

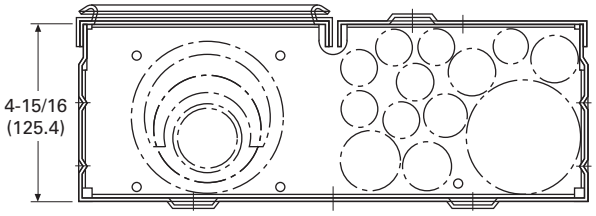

Bottom

Top Endwall (Surface)

Hub Provision Catalog Number	Quantity
DS100H2	①
DS125H2	①
DS150H2	①
DS200H2	①
DS250H2	①
DS300H2	①
DS900AP (Adapter Plate if using DS___H1 hubs only) ②	①

Top Endwall (Stucco) ③

Knockout Size Dimensions in Inches (mm)	Quantity
1.25, 1.50, 2.00, 2.50 (31.8, 38.1, 50.8, 63.5)	1
1.00, 1.25, 1.50 (25.4, 31.8, 38.1)	1
0.50, 0.75, 1.00 (12.7, 19.1, 25.4)	1
0.50, 0.75 (12.7, 19.1)	3
0.50 (12.7)	3

Bottom Endwall

Knockout Size Dimensions in Inches (mm)	Quantity
0.50 (12.7)	7
0.50, 0.75 (12.7, 19.1)	4
0.50, 0.75, 1.00 (12.7, 19.1, 25.4)	1
1.00, 1.25, 1.50, 2.00 (25.4, 31.8, 38.1, 50.8)	1
1.25, 1.50, 2.00, 2.50, 3.00 (31.8, 38.1, 50.8, 63.5, 76.2)	1

Notes

① For details regarding quantities, please contact the Technical Resource Center (TRC) at 1-877-ETN-CARE.

② Use when DS H1 Type 1, 1.25 and 1.50-inch hubs are needed.

③ RH hubs are to be used for Top Endwall (Stucco) endwalls.

Approximate Dimensions in Inches (mm)

Knockouts for Stucco and Surface Units Catalog Numbers—CMBE88B150BTF, CMBE88B200BTF, MBE24L125BTF, MBE24L200BTF, MBE48B200BTF, MBEB200BTF, MBE1224B100BTF and MBE1224B125BTF

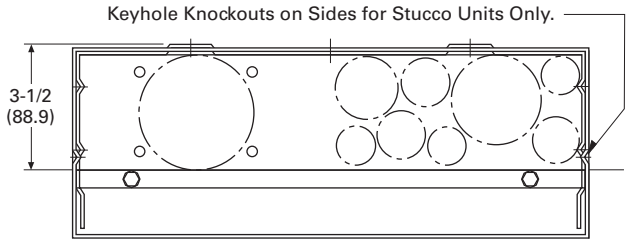

Top Stucco

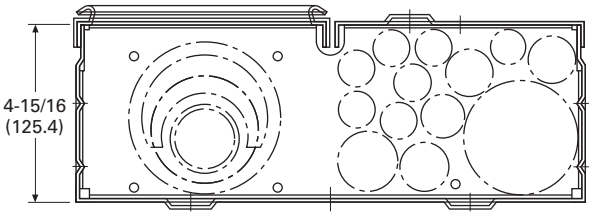

Bottom

Knockouts for Stucco and Surface Units Catalog Numbers—CMBB150BTS, CMBB200BTS, CMBP200BTS, CMBE24L125BTS, CMB24L125BTS, CMBE24L200BTS, CMBEB200BTS, CMBEB150BTS, CMBE88B150BTS, CMBP200BTS, CMBE88B200BTS, MBE24L125BTS, MBE24L200BTS, MBE48B150BTS, MBE48B200BTS, MBE88B200BTS, MBEB200BTS, MBE1224B100BTS, MBE1224B125BTS, CMB88B150BTS, CMB88B200BTS and MB48B200BTS

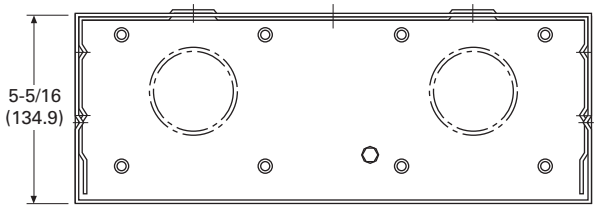

Top Surface

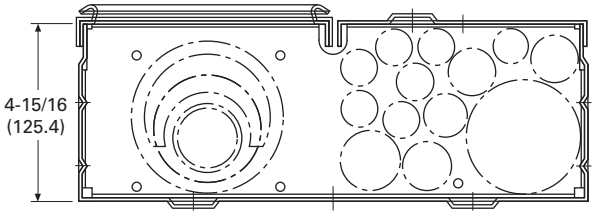

Bottom

Top Endwall (Surface)

Hub Provision Catalog Number	Quantity
DS100H2	①
DS125H2	①
DS150H2	①
DS200H2	①
DS250H2	①
DS300H2	①
DS900AP (Adapter Plate if using DS___H1 hubs only) ②	①

Top Endwall (Stucco) ③

Knockout Size Dimensions in Inches (mm)	Quantity
1.25, 1.50, 2.00, 2.50 (31.8, 38.1, 50.8, 63.5)	1
1.00, 1.25, 1.50 (25.4, 31.8, 38.1)	1
0.50, 0.75, 1.00 (12.7, 19.1, 25.4)	1
0.50, 0.75 (12.7, 19.1)	3
0.50 (12.7)	3

Bottom Endwall

Knockout Size Dimensions in Inches (mm)	Quantity
0.50 (12.7)	7
0.50, 0.75 (12.7, 19.1)	4
0.50, 0.75, 1.00 (12.7, 19.1, 25.4)	1
1.00, 1.25, 1.50, 2.00 (25.4, 31.8, 38.1, 50.8)	1
1.25, 1.50, 2.00, 2.50, 3.00 (31.8, 38.1, 50.8, 63.5, 76.2)	1

Notes

① For details regarding quantities, please contact the Technical Resource Center (TRC) at 1-877-ETN-CARE.

② Use when DS H1 Type 1, 1.25 and 1.50-inch hubs are needed.

③ RH hubs are to be used for Top Endwall (Stucco) endwalls.

Approximate Dimensions in Inches (mm)

Knockouts for Stucco and Surface Units Catalog Number—MMBE2040B200TF

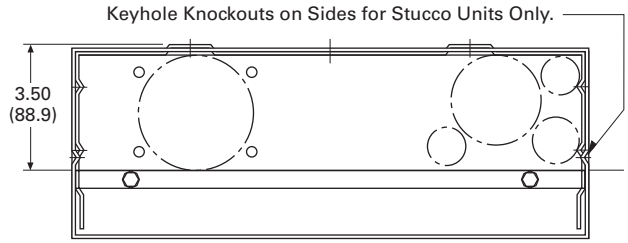

Top Stucco

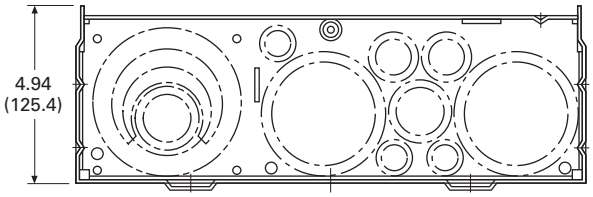

Bottom

Knockouts for Stucco and Surface Units Catalog Numbers—MBE1224B100TS, MBE1224B125TS, MBE816P200TS, MBE816P200TSCU, MBE2040B200TS, CMB1212P200BTS, CMB1212P200BTSD, CMB1212B200BTS, MB1212L200BTS and CMB1212L200BTS

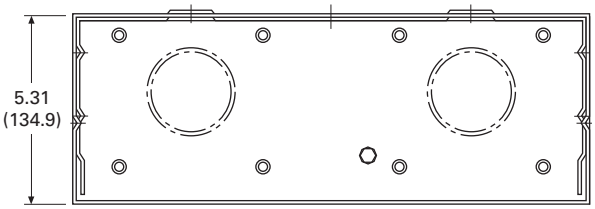

Top Surface

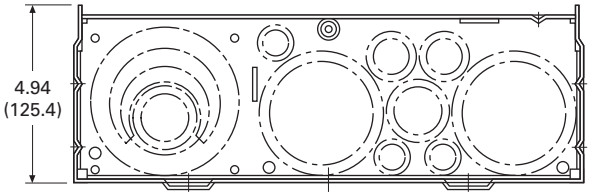

Bottom

Top Endwall (Surface)

Hub Provision Catalog Number	Quantity
DS100H2	①
DS125H2	①
DS150H2	①
DS200H2	①
DS250H2	①
DS300H2	①
DS900AP (Adapter Plate) ②	①

Top Endwall (Stucco) ③

Knockout Size Dimensions in Inches (mm)	Quantity
1.25, 1.50, 2.00, 2.50 (31.8, 38.1, 50.8, 63.5)	1
1.00, 1.25, 1.50 (25.4, 31.8, 38.1)	1
0.50, 0.75, 1.00 (12.7, 19.1, 25.4)	1
0.50, 0.75 (12.7, 19.1)	3
0.50 (12.7)	3

Bottom Endwall

Knockout Size Dimensions in Inches (mm)	Quantity
0.50 (12.7)	7
0.50, 0.75 (12.7, 19.1)	4
0.50, 0.75, 1.00 (12.7, 19.1, 25.4)	1
1.00, 1.25, 1.50, 2.00 (25.4, 31.8, 38.1, 50.8)	1
1.25, 1.50, 2.00, 2.50, 3.00 (31.8, 38.1, 50.8, 63.5, 76.2)	1

Notes

① For details regarding quantities, please contact the Technical Resource Center (TRC) at 1-877-ETN-CARE.

② Use when DS H1 Type 1, 1.25 and 1.50-inch hubs are needed.

③ RH hubs are to be used for Top Endwall (Stucco) endwalls.

Approximate Dimensions in Inches (mm)

Knockouts for Stucco and Surface Units

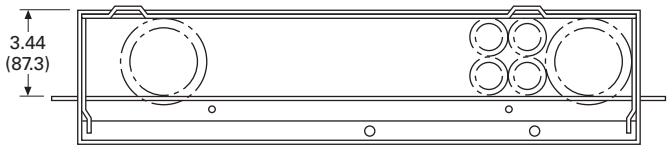

Top Flush

MBE4040B200BTF

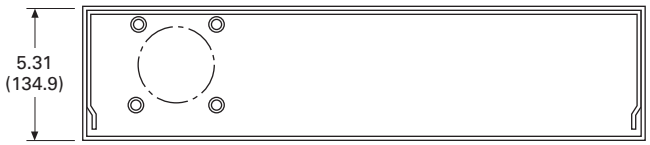

Top Surface

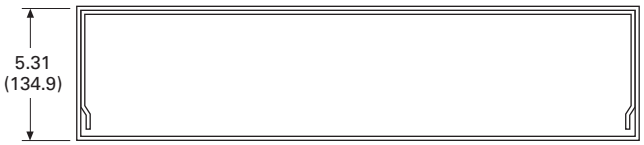

Top Surface

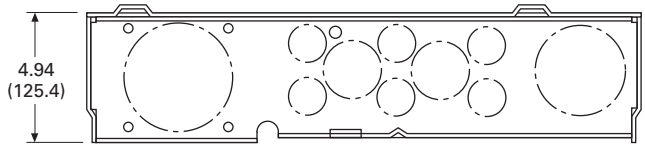

Bottom

CMBE4242B200BTS
MBE4040B200BTS

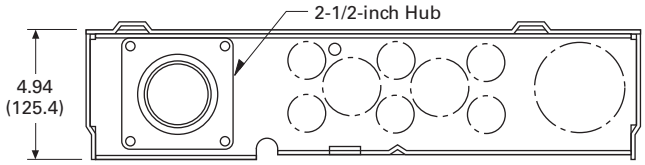

Bottom

MBE4040B200BSH

Top Endwall (Surface)

Hub Provision Catalog Number	Quantity
DS100H2	①
DS125H2	①
DS150H2	①
DS200H2	①
DS250H2	①
DS300H2	①
DS900AP (Adapter Plate) ②	①

Top Endwall (Stucco) ③

Knockout Size Dimensions in Inches (mm)	Quantity
1.25, 1.50, 2.00, 2.50 (31.8, 38.1, 50.8, 63.5)	2
0.50, 0.75 (12.7, 19.1)	3

Bottom Endwall

Knockout Size Dimensions in Inches (mm)	Quantity
0.50, 0.75 (12.7, 19.1)	6
0.50, 0.75, 1, 1.25 (12.7, 19.1, 25.4, 31.8)	2
1.00, 1.25, 1.50, 2.00, 2.50 (25.4, 31.8, 38.1, 50.8, 63.5)	1
1.00, 1.25, 1.50, 2.00, 2.50, 3.00 (25.4, 31.8, 38.1, 50.8, 63.5, 76.2)	1

Notes

① For details regarding quantities, please contact the Technical Resource Center (TRC) at 1-877-ETN-CARE.
② Use when DS H1 Type 1, 1.25 and 1.50-inch hubs are needed.
③ RH hubs are to be used for Top Endwall (Stucco) endwalls.

Approximate Dimensions in Inches (mm)

Knockout Configurations and Dimensions for Catalog Numbers MBER48B200BTS and CMBER88B200BTS

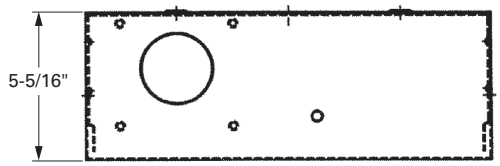

Top Surface

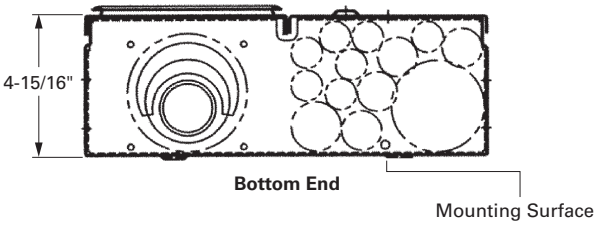

Bottom End

Semi-Flush Stucco Unit Knockout Configurations and Dimensions for MBE2040B200BTS, MBE2040B225BTS, MBE2040B200BTF and MBE2040B225BTF

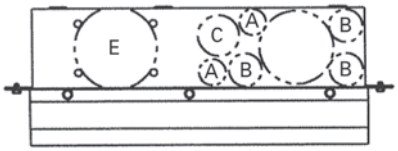

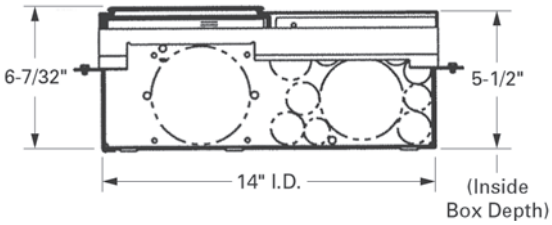

Knockout Configurations and Dimensions for Catalog Numbers CMBXP200BTS, CMBXB200BTS, CMBX1212P200BTS and CMBX3242P200BTS, CMBX3242B200BTS, CMBX1212B200BTS

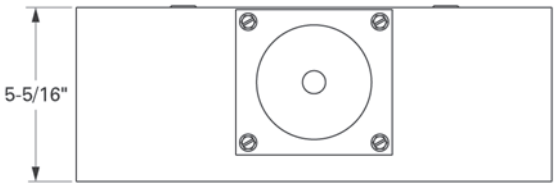

Top Endwall

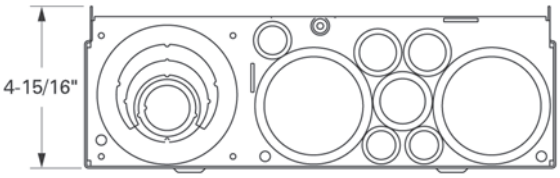

Bottom Endwall

Knockout Configurations and Dimensions for Catalog Numbers MBT48B125BTS, MBT48B150BTS, MBT48B200BTS and MBT48P200BTS

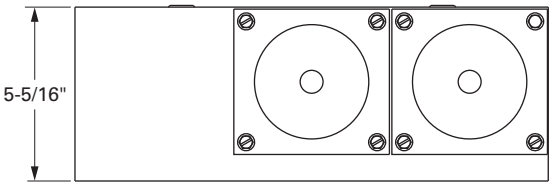

Top Surface

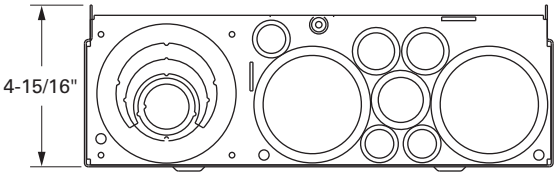

Bottom

Surface Unit Knockout Configurations and Dimensions for MBE2040B200BTS, MBE2040B225BTS, MBE2040B200BTF and MBE2040B225BTF

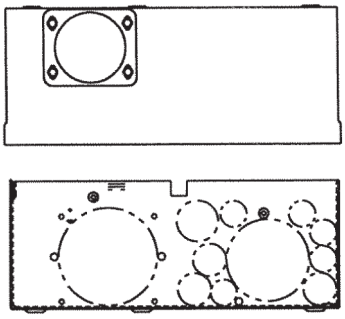

Approximate Dimensions in Inches (mm)

Knockouts for Non-EUSERC Units Catalog Numbers—MBB150BTS, MBB200BTS, MBP200BTS, MB816P200BTS, MB816P200BTSCU, MB816P200BTSD, MB816B200BTS, MB816B200BTSCU, MB2040P200BTS, MB2040B200BTS, MBP200BTSD, MBP200SD, MB816P200STD, MB2040B150SD, MB2040B200SD and MB2040P200SD

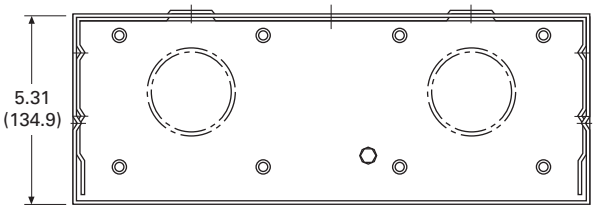

Top Surface

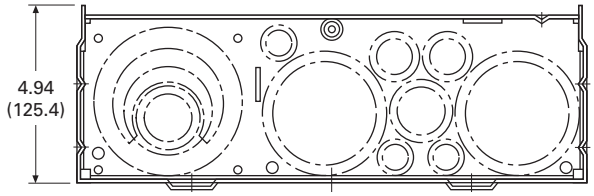

Bottom

Top Endwall (Surface)

Hub Provision Catalog Number	Quantity
DS100H2	①
DS125H2	①
DS150H2	①
DS200H2	①
DS250H2	①
DS300H2	①
DS900AP (Adapter Plate) ②	①

Knockouts for Non-EUSERC Units Catalog Number—CHMMB100BTS

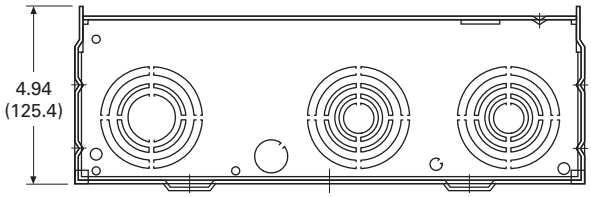

Bottom

Bottom Endwall

Knockout Size Dimensions in Inches (mm)	Quantity
0.31 (7.9)	1
0.50 (12.7)	1
0.50, 0.75, 1.00, 1.25, 1.50, 2.00, 2.50 (12.7, 19.1, 25.4, 31.8, 38.1, 50.8, 63.5)	2
1,00, 1.25, 1.50, 2.00, 2.50 (25.4, 31.8, 38.1, 50.8, 63.5)	1

Knockouts for Non-EUSERC Units Catalog Numbers—CMB2424B200BTS, MBB150BTSCR, MBB200BTSCR, MBB150BTSC, MBB200BTSC and CMB2436B200BTS

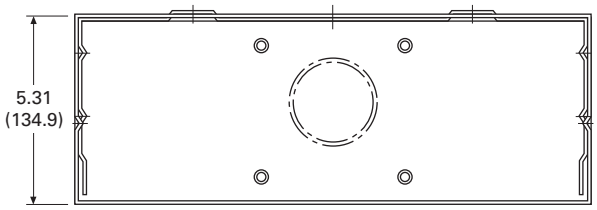

Top Surface (Catalog Numbers with SC and SCR Suffix Only)

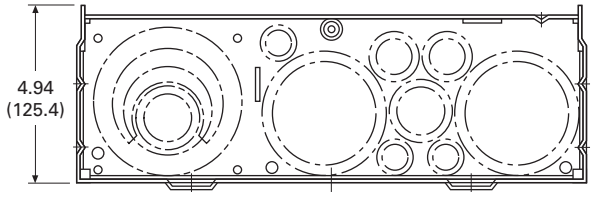

Bottom

Bottom Endwall

Knockout Size Dimensions in Inches (mm)	Quantity
0.31 (7.9)	3
0.50 (12.7)	3
0.50, 0.75 (12.7, 19.1)	2
0.75, 1.00 (12.7, 25.4)	1
1.25, 1.50, 2.00, 2.50 (19.1, 38.1, 50.8, 63.5)	2
1.50, 2.00, 2.50, 3.00 (38.1, 50.8, 63.5, 76.2)	1

Knockouts for Non-EUSERC Units Catalog Numbers—CHMMB150BTS and CHMMB200BTS

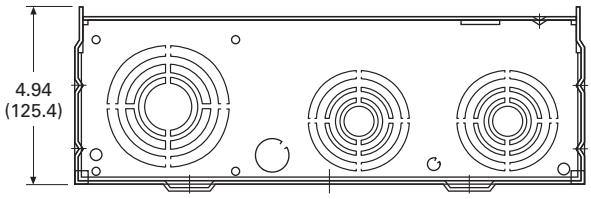

Bottom

Bottom Endwall

Knockout Size Dimensions in Inches (mm)	Quantity
0.31 (7.9)	1
0.50 (12.7)	1
0.50, 0.75, 1.00, 1.25, 1.50, 2.00, 2.50 (12.7, 19.1, 25.4, 31.8, 38.1, 50.8, 63.5)	2
1.00, 1.25, 1.50, 2.00, 2.50, 3.00 (25.4, 31.8, 38.1, 50.8, 63.5, 76.2)	1

Notes

① For details regarding quantities, please contact the Technical Resource Center (TRC) at 1-877-ETN-CARE.

② Use when DS H1 Type 1, 1.25 and 1.50-inch hubs are needed.

House Panels

Contents

Description	*Page*
Residential Meter Breakers	**V1-T4-37**
Non-EUSERC Combination Service Entrance Devices 100–200 A Styles	**V1-T4-39**
Meets EUSERC Requirements Service Entrance Devices 100–225 A.	**V1-T4-48**
West Coast All-In-One Design	**V1-T4-59**
Mechanical Interlock Cover	**V1-T4-65**
House Panels	
Commercial Safety Sockets	**V1-T4-83**
CH Style Renovation Solutions	**V1-T4-86**
Aluminum Meter Breakers	**V1-T4-87**

House Panels

Product Description

Eaton's House Panels offer a faster, easier and safer installation.These 400 A units are ideal for larger homes in North America that require meter breakers. Available in both CH and BR styles, these service entrance devices consist of a meter socket and a distribution section. In response to contractor feedback, these panels have been redesigned with a focus on flexibility, simplified wiring, and an overall ease of installation. All units come standard with a 22 kAIC main breaker.The load conductors can exit the top, bottom, side or back for greater application and installation flexibility.

Application Description

Additionally, Eaton's House Panels can be used for apartments, condominiums, clubhouses or common areas.

Features, Benefits and Functions

- NEMA 3R rainproof
- Rated for service entrance equipment
- Lever bypass socket available on certain catalog numbers
- Pin type door hinges
- Socket to distribution section is connected via insulated cable for safety
- Second main space can accept 100–200 A BW, CSR or CSR breakers

Standards and Certifications

- Ring style units meet EUSERC requirements
- UL listed

Listed

Product Selection

House Panels

400 A "House Panels"

Ampere Rating	Security ①	Bypass ②	Main Breaker	Optional Secondary Main Breaker (Not Included)	Service Type	kAIC	Dist.	Line Side Main Lugs and Neutral (Lugs Not Included)	Semi-Flush Catalog Number ③	Surface Catalog Number
300	Ringless	Lever	CSR2150	BW/CSR	OH/UG	22	8/16	Lug landings for compression	—	**HP816P300BSL**
300	Ringless	Lever	CSR2150	BW/CSR	UG	22	None		—	**HPC30SHL**
400	Ring	None	CSR2200N	CSH	UG	22	32/42		—	**CG403242SH** ④
400	Ring	None	CSR2200N	CSH	UG	22	12/12		—	**CG1212P400BS** ④⑤
400	Ring	Manual	CSR2200	BRH/CSR	UG	22	None		—	**HP40SHA** ⑥
400	Ring	Manual	CSR2200	BRH/CSR	UG	22	40/40		—	**HP404040SHA** ⑥⑦
400	Ring	None	DK2400	None	UG	22	None		—	**HP40** ④
400	Ring	None	CSR2200	BRH/CSR	UG	22	None		—	**HP40SH** ④④⑥
400	Ring	None	DK2400	None	UG	22	24/42		—	**HP402442** ④
400	Ring	None	CSR220	BRH/CSR	UG	22	40/40		**HP404040SHF** ④	**HP404040SH** ④⑥
400	Ring	Manual	CSR2200	BRH/CSR	UG	22	40/40		**HP404040SHFA** ⑦	—
400	Ring	None	CSR2200	BRH/CSR	UG	22	8/16		—	**HP816P400BS** ④⑤⑥
400	Ringless	Lever	CSR2200N	CSH	UG	22	12/12		—	**CG1212P400BSL** ⑤
400	Ringless	Lever	CSR2200N	CSH	UG	22	42/42		—	**CG404242SHL**
400	Ringless	Lever	CSR2200	BRH/CSR	UG	22	None		—	**HP40SHL** ⑥
400	Ringless	Lever	CSR2200	BRH/CSR	OH/UG	22	None		—	**HPC40SHL** ⑥
400	Ringless	Lever	CSR2200	BRH/CSR	UG	22	40/40		—	**HP404040SHL** ⑥
400	Ringless	Lever	CSR2200	BRH/CSR	UG	22	8/16		—	**HP816P400BSL** ⑤⑥
400	Ringless	Lever	CSR2200	BRH/CSR	OH/UG	22	4/6		—	**HPC4046SHLG** ⑧
400	Ringless	Lever	CSR2200	BRH/CSR	OH/UG	22	4/6		—	**HPC4046SHLX** ⑨
Bolt-On Socket										
400	Ringless	None	DK2400	None	UG	22	24/40	Lug landings for compression	—	**HP402440B** ⑩
400	Ringless	None	CSR2200	BRH/CSR	UG	22	24/40		—	**HP402440SBH** ⑥⑩

Notes

① Confirm security type for individual EUSERC utility requirements.
② Included in all of the following devices.
③ If unit needs to be semi-flush, order accessory item catalog number **HPPR** to convert **all** surface mounting devices to semi-flush mounting.
④ Reference drawing EUSERC DWG-302A, G1.
⑤ Feed-through lugs included.
⑥ For 10 kAIC, use BR or BW breakers as secondary main.
⑦ Includes manual bypass and additional ground lug to meet Nevada Power requirements.
⑧ Georgia Power approved.
⑨ Xcel approved.
⑩ Bolt-on meter socket.

Accessories

- Top-feed gutter kit to ease top-fed installation
- Re-engineered, adjustable flush mount kit for a cleaner installation
- 100 A second main breaker kit
- New 750 kcmil box type lug kit

Accessories

	Description	Catalog Number
HP40TFKIT	Top feed kit to convert surface mount house panel for overhead service	**HP40TFKIT**
HPBLK750	750 kcmil lug kit	**HPBLK750**
HPBPK	Manual bypass kit	**HPBPK**
HP2NDMNKIT 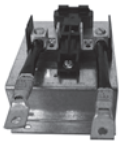	Flushmount kit	**HPPR**
	100 A 2nd main kit (Type BR branch)	**HP2NDMNKIT**
	100 A 2nd main kit (Type CH branch)	**CH2NDMNKIT**
	5th jaw for lever bypass house panels	**ARP00326CH**
	Locates 3-inch (only) incoming conduit to back of can by utilizing the 4-inch knockout useful in semi-flush applications	**HP40HUBPLATE**

Wiring Diagrams

Type CH Style House Panels

Type CH Wiring—Catalog Number CG403242SH

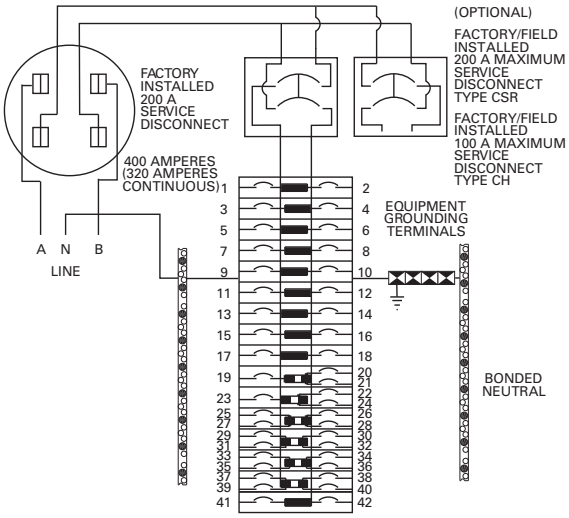

Type CH Wiring—Catalog Number CG404242SHL

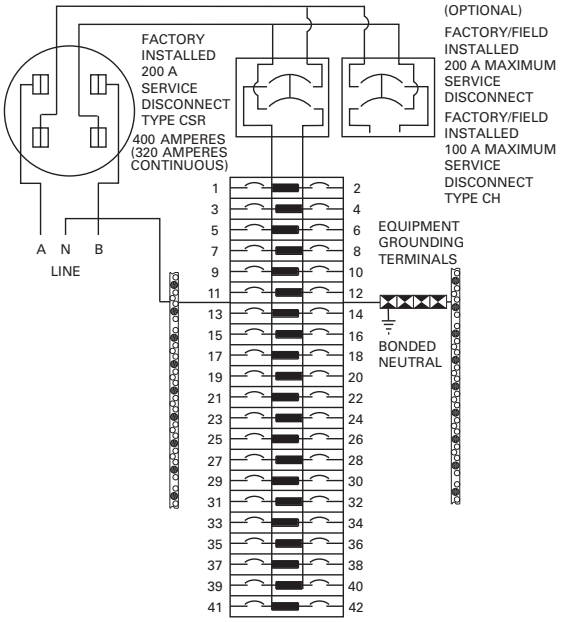

Type CH Wiring—Catalog Number CG1212P400BS

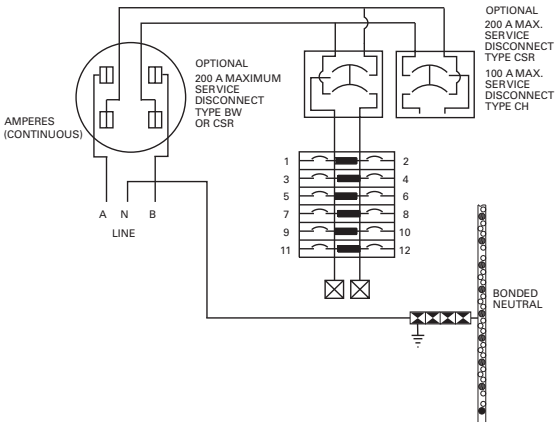

Type CH Wiring—Catalog Number CG1212P400BSL

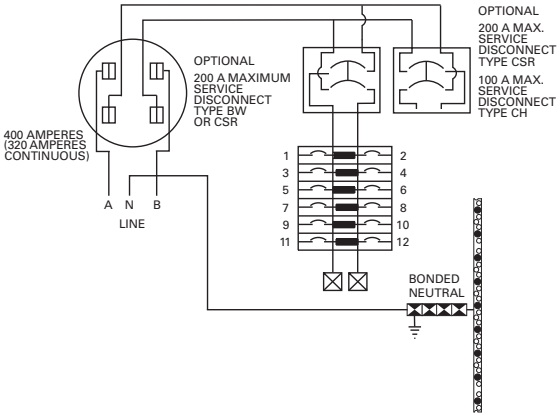

Type CH Wiring Diagram Key

- ○ #14-6 AWG
- ● #14-1/0 AWG
- ▬ 1/0 – 300 kcmil
- ⊠ #4 AWG – 300 kcmil

Type BR Style House Panels

Type BR Wiring—Catalog Number HP40

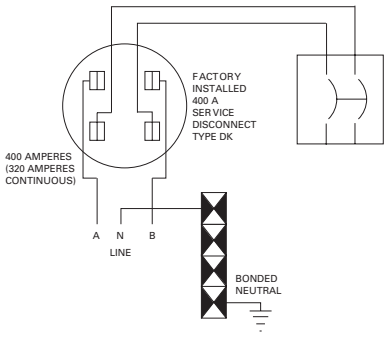

Type BR Wiring—Catalog Number HP816P400BS

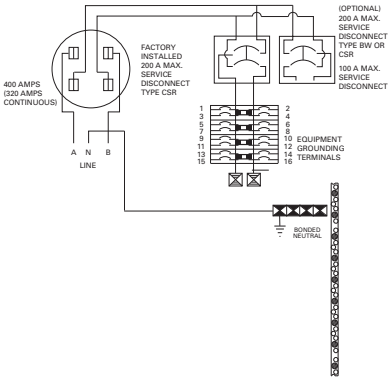

Type BR Wiring—Catalog Number HP402440B

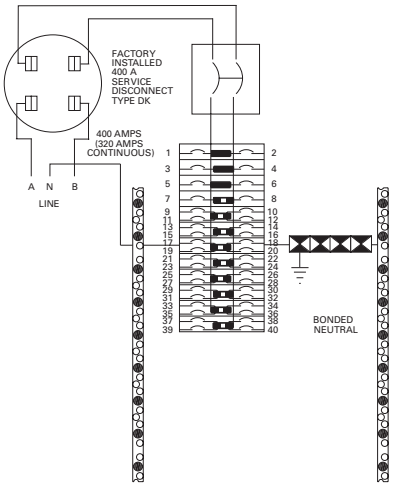

Type BR Wiring—Catalog Number HP402440SBH

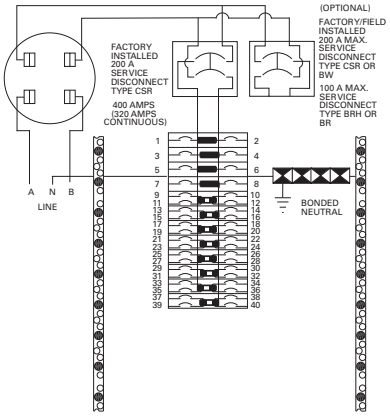

Type BR Wiring—Catalog Number HP404040SH

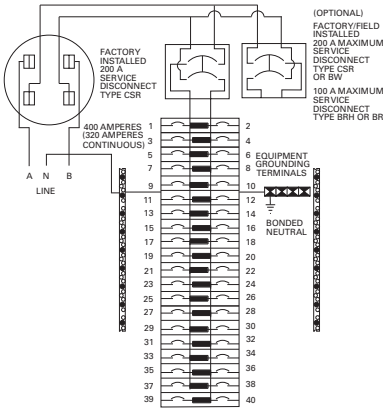

Type BR Wiring Diagram Key

- ○ #14-6 AWG
- ● #14-1/0 AWG
- ▽ #6 AWG – 250 kcmil
- ▼ #1 AWG – 300 kcmil
- ⧗ 1/0 – 300 kcmil
- ☒ #4 AWG – 300 kcmil
- ☒ #6 AWG – 300 kcmil

Type BR Wiring—Catalog Number HP402442

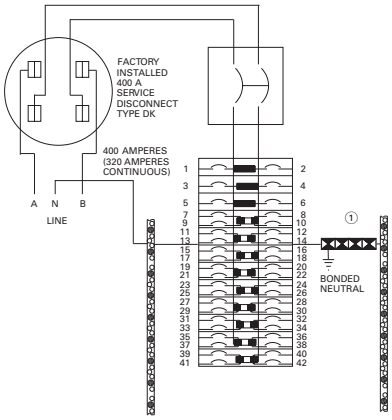

Type BR Wiring—Catalog Number HP404040SHL

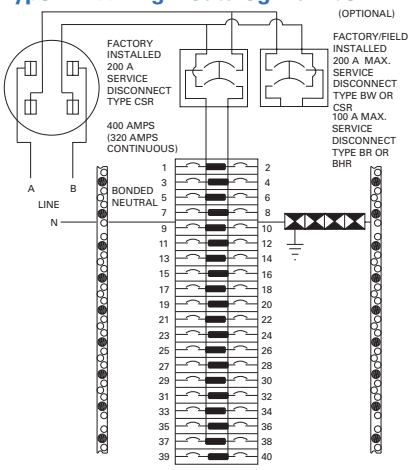

Type BR Wiring—Catalog Number HP40SH

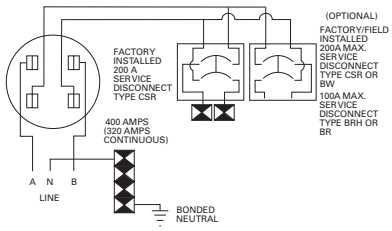

Type BR Wiring—Catalog Number HP40SHL

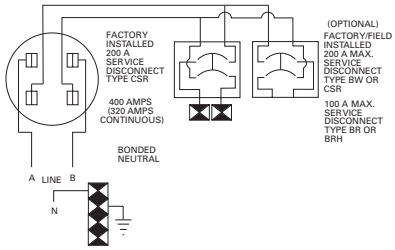

Type BR Wiring—Catalog Number HP404040SHA

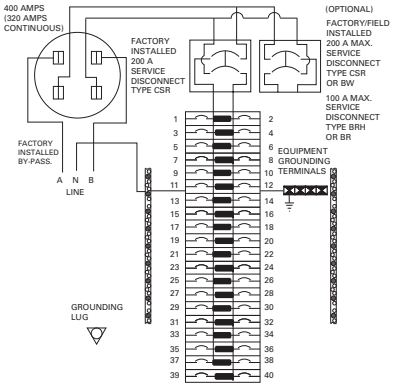

Type BR Wiring—Catalog Number HP816P400BSL

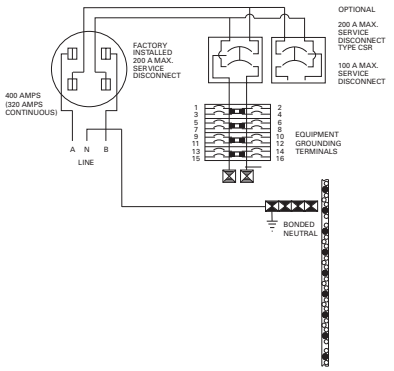

Type BR Wiring Diagram Key

- ○ #14-6 AWG
- ● #14-1/0 AWG
- ▽ #6 AWG – 250 kcmil
- ▼ #1 AWG – 300 kcmil
- ⧗ 1/0 – 300 kcmil
- ⧗ 1/3 – 300 kcmil ①
- ⊠ #4 AWG – 300 kcmil
- ⊠ #6 AWG – 300 kcmil

Catalog Numbers HPC40SHL and HPC30SHL

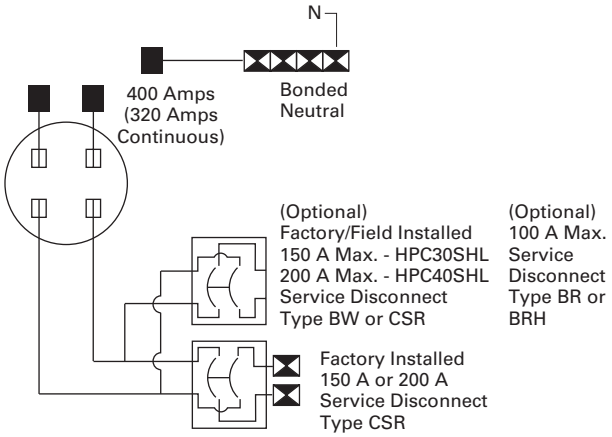

Dimensions and Knockouts

Approximate Dimensions in Inches (mm)

Catalog Numbers HPC40SHL and HPC30SHL

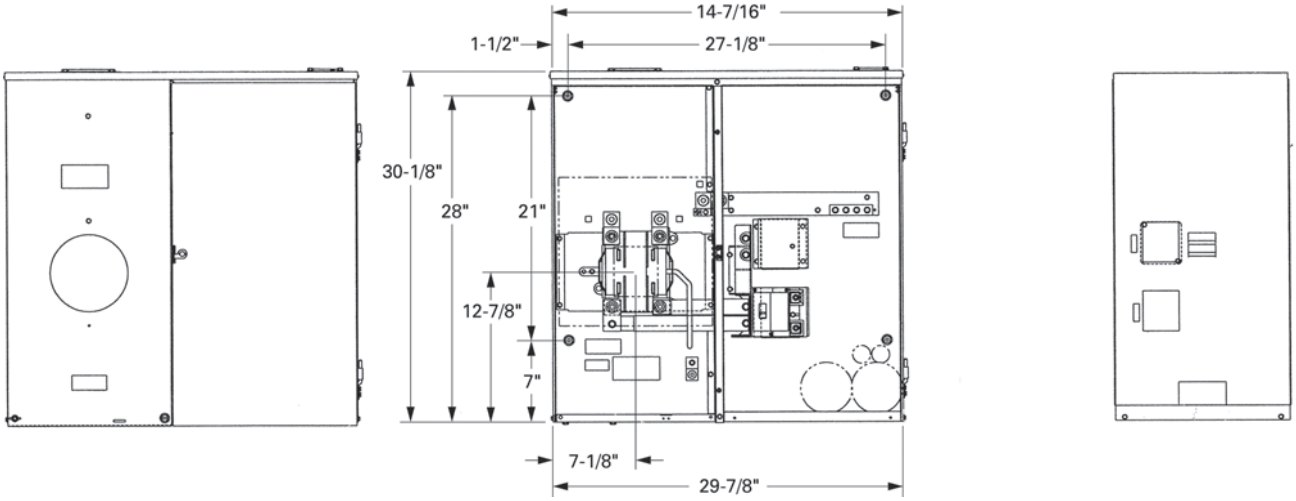

Knockout Configurations and Dimensions for HPC40SHL and HPC30SHL

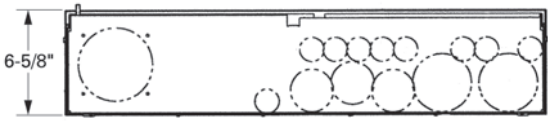

Approximate Dimensions in Inches (mm)

House Panel Dimensions and Knockouts—For All House Panels Except Those With HPCPREFIX

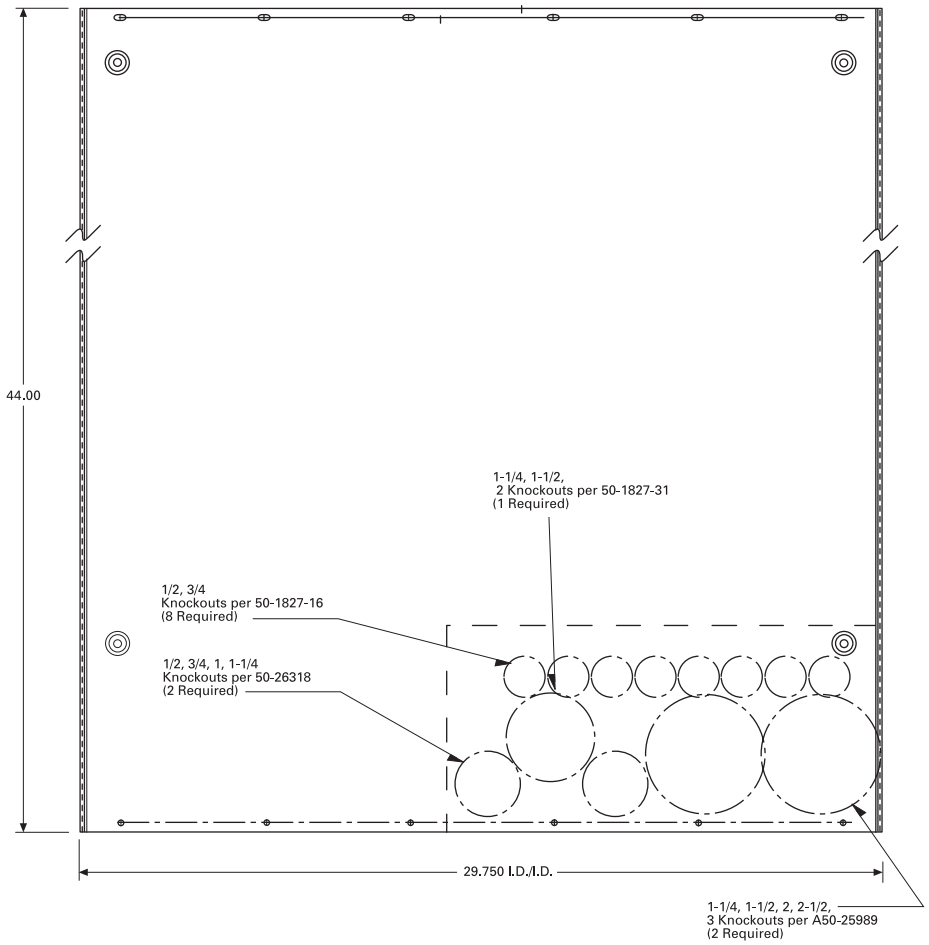

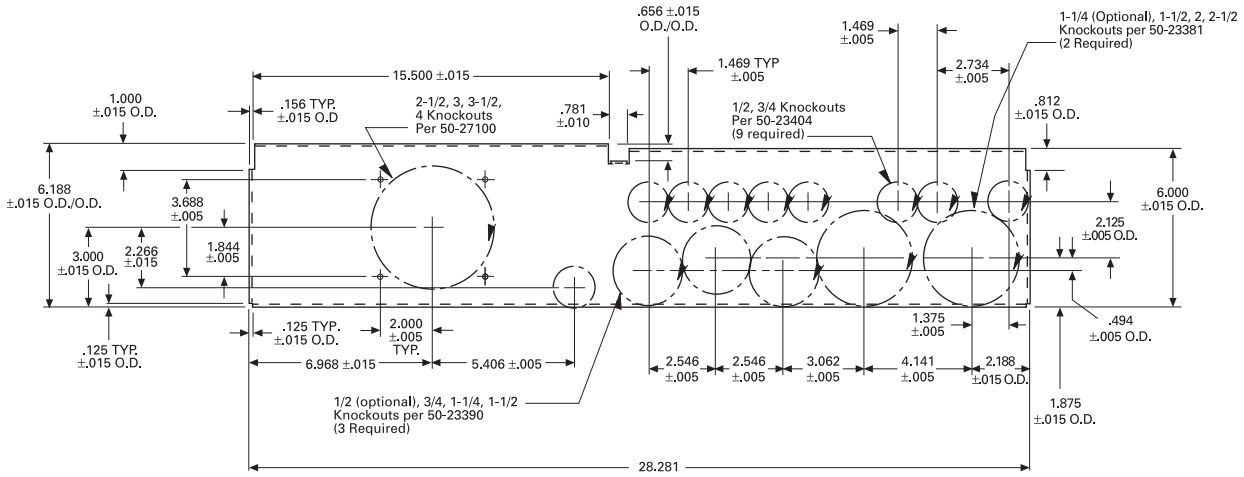

Residential Meter Breakers

Contents

Description	*Page*
Residential Meter Breakers	**V1-T4-37**
Non-EUSERC Combination Service Entrance Devices 100–200 A Styles	**V1-T4-39**
Meets EUSERC Requirements Service Entrance Devices 100–225 A.	**V1-T4-48**
West Coast All-In-One Design	**V1-T4-59**
Mechanical Interlock Cover	**V1-T4-65**
House Panels	**V1-T4-75**
Commercial Safety Sockets	
CH Style Renovation Solutions	**V1-T4-86**
Aluminum Meter Breakers	**V1-T4-87**

Commercial Safety Sockets

Product Description

A Commercial Safety Socket is service entrance equipment that consists of a commercial meter socket with a test block, and may come with or without a loadcenter type distribution section.

Application Description

Eaton's Commercial Safety Sockets are typically used where a single meter socket or single meter socket with a distribution section are needed. These areas could include a commercial business, commercial office building, individual retail facilities and signs and street lighting. Commercial Safety Sockets are typically used in EUSERC utility regions.

Features, Benefits and Functions

Commercial Safety Sockets with No Secondary Feeder

- Ring type continuous duty meter socket. 600 Vac maximum, single- or three-phase
- 100 and 200 A units
- Bussed connection from meter socket to test block
- For use with self-contained watthour meter
- Conform with EUSERC standards
- NEMA 3R construction for indoor/outdoor applications
- Units can be individually mounted with provisions for hub kits and pole mounting

Overhead Combination Units

- NEMA 3R construction for indoor/outdoor applications
- T-fuse protection, 480 Vac maximum
- Line at top, load at bottom
- 100 and 200 A units available up to 480 Vac maximum
- Circuit breaker protection to 480 Vac maximum in 10, 22, 42 and 100 kAIC ratings
- Factory-cabled connection from test block to line side of tenant main

Underground Combination Units

- 100 and 200 A units
- 480 Vac maximum
- NEMA 3R construction for indoor/outdoor applications
- Underground or overhead feed
- Provisions for self-contained watthour meter
- Bussed connection from meter socket to test block
- Tenant main disconnects are available with circuit breakers up to 480 Vac maximum and T-fuse mains, 240 Vac maximum
- Load wires can exit top or bottom

Product Selection

Overhead and Underground Combination Units and Individual Units

CH127TB

Individual Safety Sockets—600 V Maximum—No Secondary Feeder Devices ①

Ampere Rating	No. of Jaws	AC Voltage	Service	Phase, Wire	Maximum Interrupting Rating	Wire Size	Catalog Number
125	4	600	OH/UG	Single-phase, three-wire	②	#14–2/0	**CH114TB**
125	5	600	OH/UG	Three-phase, three-wire	②	#14–2/0	**CH115TB**
125	7	600	OH/UG	Three-phase, four-wire	②	#14–2/0	**CH117TB**
200	4	600	OH/UG	Single-phase, three-wire	②	#6–250 kcmil	**CH124TB**
200	5	600	OH/UG	Three-phase, three-wire	②	#6–250 kcmil	**CH125TB**
200	7	600	OH/UG	Three-phase, four-wire	②	#6–250 kcmil	**CH127TB**

Commercial Safety Sockets with Provision for Main Circuit Breaker ③

Ampere Rating	No. of Jaws	AC Voltage	Service	Phase, Wire	Feeder Circuit Breaker	Maximum Interrupting Rating	Wire Size	Catalog Number
125	4	240	OH	Single-phase, three-wire	Provision ④	⑥	#14–2/0	**CH214MTBLB**
125	7	208/120	OH	Three-phase, four-wire	Provision ④	⑥	#14–2/0	**CH217MTBLB**
125	4	240	UG	Single-phase, three-wire	Provision ④	⑥	#14–2/0	**CHU214MTBLB**
125	7	208/120	UG	Three-phase, four-wire	Provision ④	⑥	#14–2/0	**CHU217MTBLB**
200	4	120/240	OH	Single-phase, three-wire	Provision ⑤	⑦	#6–250 kcmil	**CH224MTBLB**
200	7	208/120	OH	Three-phase, four-wire	Provision ⑤	⑦	#6–250 kcmil	**CH227MTBLB**
200	4	120/240	UG	Single-phase, three-wire	Provision ⑤	⑦	#6–250 kcmil	**CHU224MTBLB**
200	7	208/120	UG	Three-phase, four-wire	Provision ⑤	⑦	#6–250 kcmil	**CHU227MTBLB**

Commercial Safety Sockets with Main Circuit Breaker Included ③

Ampere Rating	No. of Jaws	AC Voltage	Service	Phase, Wire	Feeder Circuit Breaker	Maximum Interrupting Rating	Wire Size	Catalog Number
100	7	480/277	OH	Three-phase, four-wire	EHD3100	14 kA	#14–2/0	**CH217MTBM515**
100	7	480/277	UG	Three-phase, four-wire	EHD3100	14 kA	#14–2/0	**CHU217MTBMS15**
200	7	480/277	OH	Three-phase, four-wire	JD3200	25 kA	#6–250 kcmil	**CH227MTBHMS15**
200	7	480/277	UG	Three-phase, four-wire	JD3200	25 kA	#6–250 kcmil	**CHU227MTBHMS15**

Notes

① Reference drawing EUSERC DWG-305, G1.
② If being protected by a fuse, the interrupting rating of the unit is limited to the fuse AIC rating. If being protected by a single- or three-phase, 600 V breaker, the AIC is 14 kA; by a maximum 400 A, single-phase, 240 V breaker, the AIC is 18 kA; by a maximum 200 A, single- or three-phase, 240 V breaker, the AIC is 18 kA; by a maximum 125 A, single-phase, 240 V breaker, the AIC is 22 kA.
③ Reference drawing EUSERC DWG-305A, G1.
④ Order plug-on Type BR, BRH or BRHH circuit breaker separately.
⑤ Order Type CC breaker or CCH breaker separately.
⑥ Type BR = 10 kA; Type BRH = 22 kA; Type BRHH = 42 kA.
⑦ Type CCV = 10 kA; Type CCVH = 25 kA.

Underground Combination Units and Safety Socket Accessories

CHU227MTBP

Commercial Safety Sockets with T-Fuse Switch ①

Ampere Rating	No. of Jaws	AC Voltage	Service	Phase, Wire	Feeder Circuit Breaker	Maximum Interrupting Rating	Wire Size	
100	4	120/240	OH	Single-phase, three-wire	200 kA	#14–2/0		**CH214MTBP**
100	7	208/120	OH	Three-phase, four-wire	200 kA	#14–2/0		**CH217MTBP**
100	4	120/240	UG	Single-phase, three-wire	200 kA	#14–2/0		**CHU214MTBP**
100	7	208/120	UG	Three-phase, four-wire	200 kA	#14–2/0		**CHU217MTBP**
200	4	120/240	OH	Single-phase, three-wire	200 kA	#6–250 kcmil		**CH224MTBP**
200	7	208/120	OH	Three-phase, four-wire	200 kA	#6–250 kcmil		**CH227MTBP**
200	4	120/240	UG	Single-phase, three-wire	200 kA	#6–250 kcmil		**CHU224MTBP**
200	7	208/120	UG	Three-phase, four-wire	200 kA	#6–250 kcmil		**CHU227MTBP**

Hubs

Description	Carton Weight Lbs (kg)	Catalog Number
Hub closure plate	3 (1.4)	**ARP00002CHB**
1.00-inch (25.4 mm) hub	3 (1.4)	**ARP00003CH1**
1.25-inch (31.8 mm) hub	3 (1.4)	**ARP00004CH12**
1.50-inch (38.1 mm) hub	3 (1.4)	**ARP00005CH15**
2.00-inch (50.8 mm) hub	3 (1.4)	**ARP00006CH2**
2.50-inch (63.5 mm) hub	3 (1.4)	**ARP00007CH25**

Jaws

Description	Part Number
5th jaw kit	**CH50371**

Notes

① Reference drawing EUSERC DWG-305A, G1.

Order Type CC or CHH breaker separately.

CH Style Renovation Solutions

Contents

Description	*Page*
Residential Meter Breakers	**V1-T4-37**
Non-EUSERC Combination Service Entrance Devices 100–200 A Styles	**V1-T4-39**
Meets EUSERC Requirements Service Entrance Devices 100–225 A.	**V1-T4-48**
West Coast All-In-One Design	**V1-T4-59**
Mechanical Interlock Cover	**V1-T4-65**
House Panels	**V1-T4-75**
Commercial Safety Sockets	**V1-T4-83**
CH Style Renovation Solutions Aluminum Meter Breakers	**V1-T4-87**

CH Style Renovation Solutions

Product Description

- Ring style meter socket design
- Provisional main breaker or factory main breaker available
- Center top feed design
- Exit bottom or top design
- 100 A, 125 A or 200 A ratings available

Product Selection

CH Style Retrofit Solutions ①

Ampere Rating	Description	Catalog Number
100	CH, 22 circuit, provision, center top feed, exit top or bottom, flush, OH/UG	**CMBE22P100BTFR**
125	CH, 22 circuit, provision, center top feed, exit top or bottom, surface, OH/UG	**CMBE22P125BTSR**
125	CH, 22 circuit, provision, center top feed, exit top or bottom, flush, OH/UG	**CMBE22P125BTFR**
200	CH, 32/42 circuit, 200 A main breaker, center top feed, exit top or bottom, semi-flush, OH/UG	**CMBE3242B200BTS**
200	CH, 32/42 circuit, 200 A main breaker, center top feed, exit top or bottom, flush, OH/UG	**CMBE3242B200BTFR**

Note

① Reference drawing EUSERC DWG-308, G1.

Contents

Description	*Page*
Residential Meter Breakers	**V1-T4-37**
Non-EUSERC Combination Service Entrance Devices 100–200 A Styles	**V1-T4-39**
Meets EUSERC Requirements Service Entrance Devices 100–225 A.	**V1-T4-48**
West Coast All-In-One Design	**V1-T4-59**
Mechanical Interlock Cover	**V1-T4-65**
House Panels	**V1-T4-75**
Commercial Safety Sockets	**V1-T4-83**
CH Style Renovation Solutions	**V1-T4-86**
Aluminum Meter Breakers	

Aluminum Meter Breakers

Product Description

Eaton's Aluminum Meter Breaker enclosure and external cover offers excellent corrosion resistance in the harshest coastal environments. The meter breaker's light weight and overhead/underground design offers flexibility and ease of installation.

Features and Benefits

- Overhead/underground design provides flexibility with wiring options
- Steel meter guides are standard, which provides a means of easy installation of the utility glass bulb meter into the meter's jaws
- Main Lug Only design includes six two-pole breaker locations, which complies with National Electrical Code 225.33 (maximum number of disconnects)
- Distribution section accepts BR branch breakers
- Single-phase, three-wire 120/240 Vac applications
- Hub closure plate is provided, attached to the top of the device
- Optional fifth jaw can be applied to 3 o'clock or 9 o'clock meter socket position
- 10-year warranty
- For customer support, contact Eaton's Technical Resource Center at 1-877-ETN-CARE
- For additional information or to place an order, contact your local Eaton representative or visit us at www.eaton.com

Catalog Number Selection

Meter Breakers

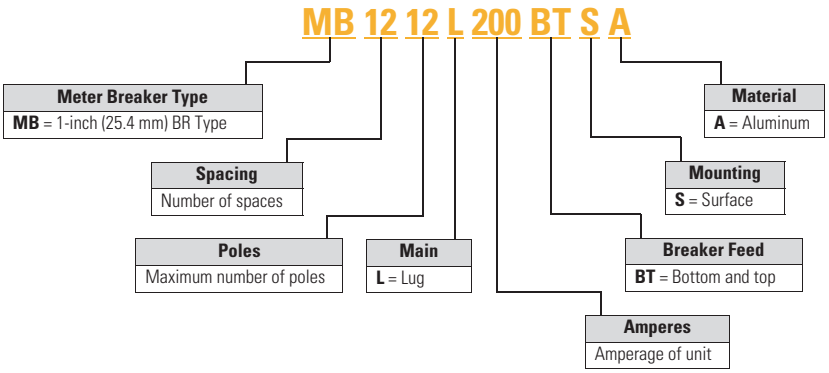

Systems for Residential and Commercial Application

Contents

Description	*Page*
Systems for Residential and Commercial Applications	
Meter Packs	**V1-T4-90**
Type CCV 120/240 V Tenant Main Circuit Breaker	**V1-T4-95**
Type CV 120/240 V Tenant Main Circuit Breaker	**V1-T4-96**
Meter Packs—1MP, 1MM and 3MM Main Tenant Circuit Breakers	**V1-T4-98**
Main Service Modules	**V1-T4-101**
Surge Metering	**V1-T4-115**
Group Metering Inline Current Transformer Cabinets	**V1-T4-116**
Residential Meter Stacks	**V1-T4-118**
1MP, 1MM and 3MM Main Tenant Circuit Breakers	**V1-T4-127**
Phase Balanced Stack	**V1-T4-128**
Commercial Meter Stack Modules	**V1-T4-129**
35MM, 37MM, 35SS and 37SS Main Tenant Circuit Breakers	**V1-T4-136**

Systems for Residential and Commercial Applications

Product Description

Group metering is a service entrance product line that consists of a main device and multiple meter sockets in one enclosure or several connected enclosures. Group metering allows the customer to install a multiple tenant-metering device in one location while providing a space and installation cost savings.

Application Description

Eaton's Electrical Sector offers two group metering designs—Meter Packs and Gangable Metering. Meter Packs, also called All-in-Ones, consist of main lugs and up to six meter sockets in one enclosure. Meter Packs are supplied as one complete unit and the user cannot "add" additional meter sockets to the unit in the future. The most common application for Meter Packs is garden apartments, small condominiums and townhouses where six or less units are metered through one centrally located Meter Pack.

Gangable Metering (Main Service Modules and Meter Stacks)

The second type of group metering is Gangable Metering, which consists of a Main Service Module used in conjunction with a Meter Stack to make a custom metering lineup. The Main Service Module can be main lug, main circuit breaker, main fusible switch or bolted pressure switch. The Meter Stack is offered with various meter sockets and bus ratings. This type of custom lineup allows the owner to add/remove meter sockets and main devices to meet future need. Gangable Metering is often used in large condominiums, strip malls and light commercial applications where more than six units are metered, or there will be a future need to add more units.

Features, Benefits and Functions

Clip-Tight™ Socket

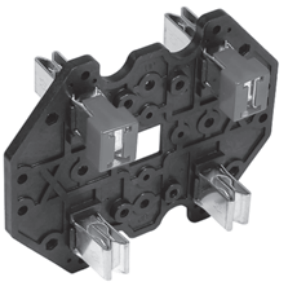

Clip-Tight Socket

Eaton's series of 1MP, 1MM, 3MM metering devices incorporate the only socket base in the industry without fasteners. This component uses jaws on both sides of a thermoplastic polyester glass fiber reinforced (PBT) base, eliminating the need for self-tapping screw connections to vertical busbars.

Field Phase Balancing

Field Phase Balancing

Due to popular incoming three-phase voltage systems and single-phase outgoing loads, installers have the option to field phase balance on the individual stack (A-B, B-C, A-C). This feature eliminates the chance of installing an incorrectly phased device due to its versatility.

Lever Bypass

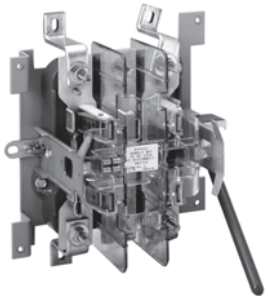

Lever Bypass

Due to commercial requirements, Eaton offers a lever bypass (as standard) on all 35MM and 37MM devices. Each socket base consists of a lever bypass, which also releases the jaws (when lever is engaged in bypass position), enabling utility company mechanics to easily remove and/or insert utility meter.

Main Tenant Breaker Cover

Main Tenant Breaker Cover

Each tenant circuit breaker is protected by a lockable raintight cover that secures the breaker against unauthorized operation. The tenant breaker cover is a high impact plastic to resist wear, rusting and corrosion.

One-Piece Vertical Busbar

One-Piece Vertical Busbar

Eaton's series of 1MP, 1MM, 3MM meter stacks embody a one-piece busbar construction to each socket, as well as a one-piece cross bus to each tenant main. Because the Eaton design uses the Clip-Tight meter socket and does not have busbar joints, the chance of hot spots occurring is virtually eliminated.

Horn and Manual Bypass

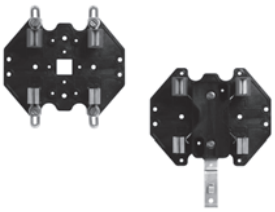

Horn and Manual Bypass

With an increasing demand for uninterrupted power, Eaton's series of 1MP, 1MM and 3MM meter sockets offer horn (ringless style) and manual (ring style) field-installable bypass accessories. These accessories provide uninterrupted tenant service if a meter is pulled for inspection or replacement.

Test Bypass Disconnects

Test Bypass Disconnects

Eaton also provides commercial meter stacks with EUSERC required test-bypass disconnects (35SS and 37SS). This bypass is used in the same applications as the lever bypass and it is required by EUSERC utilities.

Mounting Features

Mounting Features

A standard mounting rail and factory-installed swing away feet speed up and simplify installation.

Standards and Certifications

- UL listed

Listed

Meter Pack

Contents

Description	*Page*
Systems for Residential and Commercial Applications	**V1-T4-88**
Meter Packs	
Type CCV 120/240 V Tenant Main Circuit Breaker	**V1-T4-95**
Type CV 120/240 V Tenant Main Circuit Breaker	**V1-T4-96**
Meter Packs—1MP, 1MM and 3MM Main Tenant Circuit Breakers	**V1-T4-98**
Main Service Modules	**V1-T4-101**
Surge Metering	**V1-T4-115**
Group Metering Inline Current Transformer Cabinets	**V1-T4-116**
Residential Meter Stacks	**V1-T4-118**
1MP, 1MM and 3MM Main Tenant Circuit Breakers	**V1-T4-127**
Phase Balanced Stack	**V1-T4-128**
Commercial Meter Stack Modules	**V1-T4-129**
35MM, 37MM, 35SS and 37SS Main Tenant Circuit Breakers	**V1-T4-136**

Meter Packs

Product Overview

- Eaton's 1MP units are self-contained (main terminal box included) for installations requiring up to six meter socket positions in a single enclosure
- Units are not gangable with any other metering device
- Approved by major power companies, UL listed, suitable as service equipment and meet the service and electrical requirements of EUSERC and CECHA
- Series rating up to 100 kAIC
- All ringless cover devices include fifth jaw as standard
- Ring type devices do not include fifth jaw as standard. Order 1MM5JK if needed
- Bondable neutral
- 120/240 Vac, single-phase three-wire metering device
- Up to 600 A maximum horizontal bus rating
- Incoming lugs not included (phase A, phase B and neutral)
- Indoor/outdoor construction
- Provision for two-pole breaker (plug-on type for 125 A sockets and bolt-on type for 200 A sockets)—circuit breakers not included
- Underground incoming feed
- Aluminum or copper bus

Catalog Number Selection

1 MP 4 12 4 R C

Single-Phase

Type of Metering
MP = Meter pack

Number of Meters
2, 3, 4, 5 or 6
Blank = Accessory

Ampere Rating
12 = 125 A
20 = 200 A
Blank = Accessory

Bus Ampere Rating
2 = 200 A
4 = 400 A
6 = 600 A
Blank = Accessory

Security or Accessory Code
R= Ring
RRL = Ringless
RRLB = Ringless with horn bypass
LK = Lug kit (accessory)
SC = Crimp lug landing pad kit (accessory)

Bus Material
C = Copper bus
Blank = Aluminum bus

When Ordering:

1. Determine catalog number of the basic device.
2. Include Lug Kit for incoming section. See **Page V1-T4-94**.
3. Find quantity and catalog numbers for tenant circuit breakers. (Order one breaker per socket.) See **Page V1-T4-94**.
4. Select required accessories. See **Page V1-T4-138**.

Product Selection

Meter Packs

Aluminum Bus—Main Lugs Not Included—See Page V1-T4-94

Socket Ampere Rating	Number of Meter Sockets	Bus Ampere Rating	Main Tenant Breaker Type (See Page V1-T4-94)	Catalog Number	Semi-Flush Flange Kit Catalog Number
Ring Style Meter Socket Covers ①②					
125 ③	2 ⑤	200	Plug-on type BR2_ BRH2_ BRHH2_ BRX2_	**1MP2122R** ⑥⑨	**1MPSFK1**
125 ③	3	400		**1MP3124R** ⑦	**1MPSFK2**
125 ③	4	400		**1MP4124R** ⑦	**1MPSFK2**
125 ③	5 ⑤	600		**1MP5126R** ⑦	**1MPSFK3**
125 ③	6 ⑤	600		**1MP6126R** ⑦	**1MPSFK3**
200 ④	2	400	Bolt-on type CCV2_X CCVH2_X CVS2_XMM CV2_XMM CVH2_XMM	**1MP2204R** ⑦	**1MPSFK4**
200 ④	3	600		**1MP3206R** ⑦	**1MPSFK5**
200 ④	4	600		**1MP4206R** ⑦	**1MPSFK5**
200 ④	5	600		**1MP5206R** ⑦	**1MPSFK6**
200 ④	6	600		**1MP6206R** ⑦	**1MPSFK6**
Ringless Style Meter Socket Covers ⑧					
125	2	200	Plug-on type BR2_ BRH2_ BRHH2_ BRX2_	**1MP2122RRL** ⑥⑨	**1MPSFK1**
125	3	400		**1MP3124RRL** ⑦	**1MPSFK2**
125	4	400		**1MP4124RRL** ⑦	**1MPSFK2**
125	5	600		**1MP5126RRL** ⑦	**1MPSFK3**
125	6	600		**1MP6126RRL** ⑦	**1MPSFK3**
200	2	400	Bolt-on type CCV2_X CCVH2_X CVS2_XMM CV2_XMM CVH2_XMM	**1MP2204RRL** ⑦	**1MPSFK4**
200	3	600		**1MP3206RRL** ⑦	**1MPSFK5**
200	4	600		**1MP4206RRL** ⑦	**1MPSFK5**
200	5	600		**1MP5206RRL** ⑦	**1MPSFK6**
200	6	600		**1MP6206RRL** ⑦	**1MPSFK6**
Ringless Style Covers with Horn Bypass ⑧					
125	2	200	Plug-on type BR2_ BRH2_ BRHH2_ BRX2_	**1MP2122RRLB** ⑥⑨	**1MPSFK1**
125	3	400		**1MP3124RRLB** ⑦⑩	**1MPSFK2**
125	4	400		**1MP4124RRLB** ⑦⑩	**1MPSFK2**
125	5	600		**1MP5126RRLB** ⑦⑩	**1MPSFK3**
125	6	600		**1MP6126RRLB** ⑦⑩	**1MPSFK3**
200	2	400	Bolt-on type CCV2_X CCVH2_X CVS2_XMM CV2_XMM CVH2_XMM	**1MP2204RRLB** ⑦⑩	**1MPSFK4**
200	3	600		**1MP3206RRLB** ⑦⑩	**1MPSFK5**
200	4	600		**1MP4206RRLB** ⑦⑩	**1MPSFK5**
200	5	600		**1MP5206RRLB** ⑦⑩	**1MPSFK6**
200	6	600		**1MP6206RRLB** ⑦⑩	**1MPSFK6**

Notes

① Ring Style Meter Packs do not come with fifth jaw. Order **1MM5JK** if needed.
② Reference drawing EUSERC DWG-342, G1.
③ To change in field from ring to ringless—order **1MMRC125**.
④ To change in field from ring to ringless—order **1MMRC200**.
⑤ To change from ring to ringless covers, the top socket only in 2, 5 and 6 socket designs—order **1MMRC125T**. Top socket only.
⑥ Main lugs included. #6–300 kcmil. (Optional lugs are not available.)
⑦ For overhead use, order DS_H2 type hub.
⑧ Fifth jaw factory installed at 9 o'clock position.
⑨ For overhead use, order DS type hub.
⑩ To order with raceway provision in bottom endwall, add "T" suffix to the catalog number. Trough accessory catalog number is **1008934CH**.

See **Page V1-T4-94** for Main Lug Kit selection and Wire Sizes.

Copper Bus—Main Lugs Not Included—See Page V1-T4-94

Socket Ampere Rating	Number of Meter Sockets	Bus Ampere Rating	Main Tenant Breaker Type (See Page V1-T4-94)	Catalog Number	Semi-Flush Flange Kit Catalog Number
Ring Style Meter Socket Covers ①②					
125 ③	2 ⑤	200	Plug-on type BR2_ BRH2_ BRHH2_ BRX2_	**1MP2122RC** ⑦	**1MPSFK1**
125 ③	3	400		**1MP3124RC** ⑧	**1MPSFK2**
125 ③	4	400		**1MP4124RC** ⑧	**1MPSFK2**
125 ③	5 ⑤	600		**1MP5126RC** ⑧	**1MPSFK3**
125 ③	6 ⑤	600		**1MP6126RC** ⑧	**1MPSFK3**
200 ④	2	400	Bolt-on type CCV2_X CCVH2_X CVS2_XMM CV2_XMM CVH2_XMM	**1MP2204RC** ⑧	**1MPSFK4**
200 ④	3	600		**1MP3206RC** ⑧	**1MPSFK5**
200 ④	4	600		**1MP4206RC** ⑧	**1MPSFK5**
200 ④	5	600		**1MP5206RC** ⑧	**1MPSFK6**
200 ④	6	600		**1MP6206RC** ⑧	**1MPSFK6**
Ringless Style Meter Socket Covers ⑥					
125	2	200	Plug-on type BR2_ BRH2_ BRHH2_ BRX2_	**1MP2122RRLC** ⑧	**1MPSFK1**
125	3	400		**1MP3124RRLC** ⑧	**1MPSFK2**
125	4	400		**1MP4124RRLC** ⑧	**1MPSFK2**
125	5	600		**1MP5126RRLC** ⑧	**1MPSFK3**
125	6	600		**1MP6126RRLC** ⑧	**1MPSFK3**
200	2	400	Bolt-on type CCV2_X CCVH2_X CVS2_XMM CV2_XMM CVH2_XMM	**1MP2204RRLC** ⑧	**1MPSFK4**
200	3	600		**1MP3206RRLC** ⑧	**1MPSFK5**
200	4	600		**1MP4206RRLC** ⑧	**1MPSFK5**
200	5	600		**1MP5206RRLC** ⑧	**1MPSFK6**
200	6	600		**1MP6206RRLC** ⑧	**1MPSFK6**
Ringless Style Covers with Horn Bypass ⑥					
125	2	200	Plug-on type BR2_ BRH2_ BRHH2_ BRX2_	**1MP2122RRLBC** ⑧	**1MPSFK1**
125	3	400		**1MP3124RRLBC** ⑧	**1MPSFK2**
125	4	400		**1MP4124RRLBC** ⑧	**1MPSFK2**
125	5	600		**1MP5126RRLBC** ⑧	**1MPSFK3**
125	6	600		**1MP6126RRLBC** ⑧	**1MPSFK3**
200	2	400	Bolt-on type CCV2_X CCVH2_X CVS2_XMM CV2_XMM CVH2_XMM	**1MP2204RRLBC** ⑧	**1MPSFK4**
200	3	600		**1MP3206RRLBC** ⑧	**1MPSFK5**
200	4	600		**1MP4206RRLBC** ⑧	**1MPSFK5**
200	5	600		**1MP5206RRLBC** ⑧	**1MPSFK6**
200	6	600		**1MP6206RRLBC** ⑧	**1MPSFK6**

Notes

① Ring Style Meter Packs do not come with fifth jaw. Order **1MM5JK** if needed.
② Reference drawing EUSERC DWG-342, G1.
③ To change in field from ring to ringless—order **1MMRC125**.
④ To change in field from ring to ringless—order **1MMRC200**.
⑤ To change in field from ring to ringless covers, the top socket only in 5 to 6 socket design—order **1MMRC125T**. Top socket only—other sockets see ③.
⑥ Fifth jaw factory installed at 9 o'clock position.
⑦ For overhead use, order DS_H2 type hub.
⑧ For overhead use, order DS_MH type hub.

1MPLK3

Main Lug Selection—Field-Installed Lugs for 400 or 600 A Main Bus

Line Lug and Wire Sizes Order Separately and Field Install	Line Lug Kit Catalog Number Order Three Kits (For Two Lines and Neutral)
(1) #6–600 kcmil or (2) 2/0–250 kcmil	**1MPLK1**
(2) 250–500 kcmil	**1MPLK3**
(3) #4–300 kcmil	**1MPLK4** ①
(1) 750 kcmil	**1MPLK2** ②
Crimp lug landing pad 250–750 kcmil	**1MPSC1** ①

Wire Sizes—Neutral and Ground Lugs

Description	Wire Size, Al/Cu	Catalog Number
Neutral—125 A meter pack	#6–2/0	—
Neutral—200 A meter pack	#1/0–300 kcmil	—
Equipment ground bar—125 A meter pack	#14–#2	—
Equipment ground bar—200 A meter pack	#14–2/0	—
Optional ground bar	#6–2/0	**1MMGBK**

Notes

① This kit comes with three pads for two lines and neutral. Each pad will accept one or two crimp lugs. Cannot be used on **1MP2122R**, **RL, RC** and **RLB** EUSERC underground termination.

② This lug is not UL listed.

Each stack includes a neutral and ground bar. If an extra ground bar is needed, order **1MMGBK**.

Type CCV Tenant Main Circuit Breaker

Contents

Description	*Page*
Systems for Residential and Commercial Applications	**V1-T4-88**
Meter Packs	**V1-T4-90**
Type CCV 120/240 V Tenant Main Circuit Breaker	
Type CV 120/240 V Tenant Main Circuit Breaker	**V1-T4-96**
Meter Packs—1MP, 1MM and 3MM Main Tenant Circuit Breakers	**V1-T4-98**
Main Service Modules	**V1-T4-101**
Surge Metering	**V1-T4-115**
Group Metering Inline Current Transformer Cabinets	**V1-T4-116**
Residential Meter Stacks	**V1-T4-118**
1MP, 1MM and 3MM Main Tenant Circuit Breakers	**V1-T4-127**
Phase Balanced Stack	**V1-T4-128**
Commercial Meter Stack Modules	**V1-T4-129**
35MM, 37MM, 35SS and 37SS Main Tenant Circuit Breakers	**V1-T4-136**

Type CCV 120/240 V Tenant Main Circuit Breaker

Product Overview

Eaton offers Type CCV (10 and 22 kAIC) and Type CV (42, 65 and 100 kAIC) family of circuit breakers as the primary tenant main breakers used in most group metering applications.

Product Description

Eaton's residential products Type CCV circuit breaker is available in two-pole configurations from 100 A to 225 A in 10 and 22 kAIC ratings.

Features

- **Ratings**—120/240 Vac, two-pole, through 225 continuous amperes, calibrated at 40 °C
- **Tripping characteristics**—thermal-magnetic trip, calibrated and sealed after assembly. Indirectly heated thermal tripping bimetal elements
- **Interrupting capacity** at 120/240 Vac. Type CCV—10 kAIC rms symmetrical. Type CCVH—25 kAIC rms symmetrical
- **Handles**—trip-free with ON-TRIPPED-OFF positions. Reset past OFF is required to latch breaker contacts after tripping
- **Terminals**—standard lugs (wire connectors) suitable for copper or aluminum wire
- **Backward compatibility**—Type CCV and CCVH retains same profile and footprint as the CC and CCH breaker, allowing use in the same applications

Standards and Certifications

- Complies with UL Standard 489. Breakers are listed under UL File #E7819

UL Listed

Product Selection

Type CCV 120/240 V Tenant Main Circuit Breaker

Ampere Rating	Two-Pole Breaker Wire Size Range, Al/Cu	10 kAIC	25 kAIC
60	#4–4/0	**CCV2060X**	**CCVH2060X**
70		**CCV2070X**	**CCVH2070X**
80		**CCV2080X**	**CCVH2080X**
90		**CCV2090X**	**CCVH2090X**
100	#2–300 kcmil	**CCV2100X**	**CCVH2100X**
125		**CCV2125X**	**CCVH2125X**
150		**CCV2150X**	**CCVH2150X**
175		**CCV2175X**	**CCVH2175X**
200		**CCV2200X**	**CCVH2200X**
225		**CCV2225X**	**CCVH2225X**

Modification Codes

- X—load side terminals only

Type CV Tenant Main Circuit Breaker

Contents

Description	*Page*
Systems for Residential and Commercial Applications	**V1-T4-88**
Meter Packs	**V1-T4-90**
Type CCV 120/240 V Tenant Main Circuit Breaker	**V1-T4-95**
Type CV 120/240 V Tenant Main Circuit Breaker	**V1-T4-96**
Meter Packs—1MP, 1MM and 3MM Main Tenant Circuit Breakers	**V1-T4-98**
Main Service Modules	**V1-T4-101**
Surge Metering	**V1-T4-115**
Group Metering Inline Current Transformer Cabinets	**V1-T4-116**
Residential Meter Stacks	**V1-T4-118**
1MP, 1MM and 3MM Main Tenant Circuit Breakers	**V1-T4-127**
Phase Balanced Stack	**V1-T4-128**
Commercial Meter Stack Modules	**V1-T4-129**
35MM, 37MM, 35SS and 37SS Main Tenant Circuit Breakers	**V1-T4-136**

Type CV 120/240 V Tenant Main Circuit Breaker

Product Overview

Eaton offers Type CCV (10 and 22 kAIC) and Type CV (42, 65 and 100 kAIC) family of circuit breakers as the primary tenant main breakers used in most group metering applications.

Product Description

Eaton's residential products Type CV molded-case circuit breaker is available in two- and three-pole configurations from 60 A to 225 A in 42, 65 and 100 kAIC ratings.

Features

- **Ratings**—120/240 Vac, two- and three-pole, through 225 continuous amperes, calibrated at 40 °C
- **Tripping characteristics**—thermal-magnetic trip, calibrated and sealed after assembly. Indirectly heated thermal tripping bimetal elements; includes push-to-test button for routine preventive maintenance
- **Interrupting capacity** at 120/240 Vac
  - Type CVS—42,000 A rms symmetrical
  - Type CV—65,000 A rms symmetrical
  - Type CVH—100,000 A rms symmetrical
- **Handles**—trip-free with ON-TRIPPED-OFF positions. Reset past OFF is required to latch breaker contacts after tripping
- **Terminals**—standard lugs (wire connectors) suitable for copper or aluminum wire

Standards and Certifications

- Complies with UL Standard 489. Breakers are listed under UL File #E7819

Listed

Product Selection

Type CV Two-Pole Tenant Main Circuit Breakers

Number of Poles	Main Tenant Circuit Breaker Ampere Rating	Wire Size Range, Al/Cu	42 kAIC Catalog Number	65 kAIC Catalog Number	100 kAIC Catalog Number
2	60	#6–4/0	**CVS2060XMM**	**CV2060XMM**	**CVH2060XMM**
	70		**CVS2070XMM**	**CV2070XMM**	**CVH2070XMM**
	80		**CVS2080XMM**	**CV2080XMM**	**CVH2080XMM**
	90		**CVS2090XMM**	**CV2090XMM**	**CVH2090XMM**
	100		**CVS2100XMM**	**CV2100XMM**	**CVH2100XMM**
	125		**CVS2125XMM**	**CV2125XMM**	**CVH2125XMM**
	150		**CVS2150XMM**	**CV2150XMM**	**CVH2150XMM**
	175		**CVS2175XMM**	**CV2175XMM**	**CVH2175XMM**
	200		**CVS2200XMM**	**CV2200XMM**	**CVH2200XMM**
	225		**CVS2225XMM**	**CV2225XMM**	**CVH2225XMM**

Type CV Three-Pole Tenant Main Circuit Breakers

Number of Poles	Main Tenant Circuit Breaker Ampere Rating	Wire Size Range, Al/Cu	42 kAIC Catalog Number	65 kAIC Catalog Number	100 kAIC Catalog Number
3	60	#6–4/0	**CVS3060X**	**CV3060X**	**CVH3060X**
	70		**CVS3070X**	**CV3070X**	**CVH3070X**
	80		**CVS3080X**	**CV3080X**	**CVH3080X**
	90		**CVS3090X**	**CV3090X**	**CVH3090X**
	100		**CVS3100X**	**CV3100X**	**CVH3100X**
	125		**CVS3125X**	**CV3125X**	**CVH3125X**
	150		**CVS3150X**	**CV3150X**	**CVH3150X**
	175		**CVS3175X**	**CV3175X**	**CVH3175X**
	200		**CVS3200X**	**CV3200X**	**CVH3200X**
	225		**CVS3225X**	**CV3225X**	**CVH3225X**

Accessories

Field Installable

Description	Catalog Number
Two-pole 300 kcmil with terminal shield	**2TA225CVK**
Three-pole 300 kcmil with terminal shield	**3TA225CVK**
Replacement mounting hardware kit for 200 A 1MP, 1MM and 3MM units	**1MMCBK**

Main Tenant Circuit Breakers

Contents

Description	*Page*
Systems for Residential and Commercial Applications	**V1-T4-88**
Meter Packs	**V1-T4-90**
Type CCV 120/240 V Tenant Main Circuit Breaker	**V1-T4-95**
Type CV 120/240 V Tenant Main Circuit Breaker	**V1-T4-96**
Meter Packs—1MP, 1MM and 3MM Main Tenant Circuit Breakers	
Main Service Modules	**V1-T4-101**
Surge Metering	**V1-T4-115**
Group Metering Inline Current Transformer Cabinets	**V1-T4-116**
Residential Meter Stacks	**V1-T4-118**
1MP, 1MM and 3MM Main Tenant Circuit Breakers	**V1-T4-127**
Phase Balanced Stack	**V1-T4-128**
Commercial Meter Stack Modules	**V1-T4-129**
35MM, 37MM, 35SS and 37SS Main Tenant Circuit Breakers	**V1-T4-136**

Meter Packs—1MP, 1MM and 3MM Main Tenant Circuit Breakers

Product Description

Specific main tenant circuit breakers that are to be used in meter packs (1MP), residential meter stacks (1MM) and three-phase in single-phase out meter stacks (3MM).

Product Selection

Description	Number of Poles	Main Tenant Circuit Breaker Ampere Rating	10 kAIC Catalog Number ①	22 kAIC Catalog Number	25 kAIC Catalog Number ①②③④	42 kAIC Catalog Number ②③④	65 kAIC Catalog Number ②③④	100 kAIC Catalog Number ②③④
Plug-On Type								
Plug-on type circuit breakers used with 1MP, 1MM, and 3MM 125 A modular metering stacks	2	60	**BR260**	**BRH260**	—	**BRHH260**	**BRX260**	—
	2	70	**BR270**	**BRH270**	—	**BRHH270**	**BRX270**	—
	2	80	**BR280**	**BRH280**	—	**BRHH280**	**BRX280**	—
	2	90	**BR290**	**BRH290**	—	**BRHH290**	**BRX290**	—
	2	100	**BR2100**	**BRH2100**	—	**BRHH2100**	**BRX2100**	—
	2	110	**BR2110**	**BRH2110**	—	**BRHH2110**	**BRX2110**	—
	2	125	**BR2125**	**BRH2125**	—	**BRHH2125**	**BRX2125**	—
Bolt-On Type								
Bolt-on type circuit breakers used with 1MP, 1MM, and 3MM 200 A modular metering stacks	2	60	**CCV2060X**	—	**CCVH2060X**	**CVS2060XMM**	**CV2060XMM**	**CVH2060XMM**
	2	70	**CCV2070X**	—	**CCVH2070X**	**CVS2070XMM**	**CV2070XMM**	**CVH2070XMM**
	2	80	**CCV2080X**	—	**CCVH2080X**	**CVS2080XMM**	**CV2080XMM**	**CVH2080XMM**
	2	90	**CCV2090X**	—	**CCVH2090X**	**CVS2090XMM**	**CV2090XMM**	**CVH2090XMM**
	2	100	**CCV2100X**	—	**CCVH2100X**	**CVS2100XMM**	**CV2100XMM**	**CVH2100XMM**
	2	125	**CCV2125X**	—	**CCVH2125X**	**CVS2125XMM**	**CV2125XMM**	**CVH2125XMM**
	2	150	**CCV2150X**	—	**CCVH2150X**	**CVS2150XMM**	**CV2150XMM**	**CVH2150XMM**
	2	175	**CCV2175X**	—	**CCVH2175X**	**CVS2175XMM**	**CV2175XMM**	**CVH2175XMM**
	2	200	**CCV2200X**	—	**CCVH2200X**	**CVS2200XMM**	**CV2200XMM**	**CVH2200XMM**

Notes

① #2–300 kcmil wire size range for CCV and CCVH tenant main circuit breakers.
② "MM" suffix indicates mounting hardware kit is included as standard with tenant main breaker.
③ 1MMCBK replacement mounting hardware kit. One kit is needed per breaker. Mounting hardware kit ships standard with breaker "MM" suffix offering.
④ #6–4/0 kcmil wire size range for CVS, CV and CVH tenant main circuit breakers. If #2–300 kcmil is needed, order 2TA225CVK. One kit needed per breaker.

Dimensions and Knockouts

Approximate Dimensions in Inches (mm)

1MP, 125 Ampere Meter Packs—Aluminum and Copper Bus

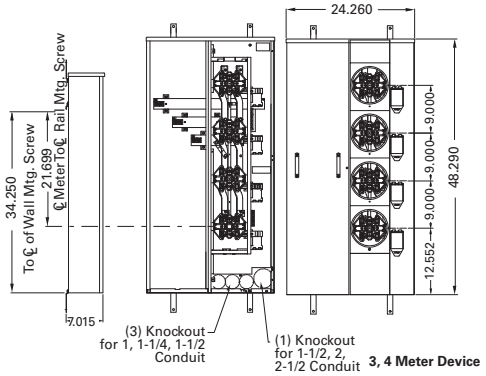

3, 4 Meter Device

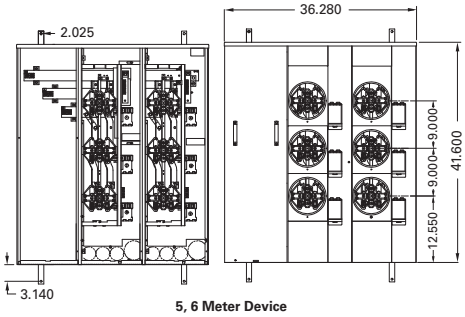

5, 6 Meter Device

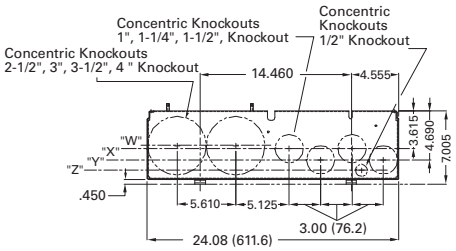

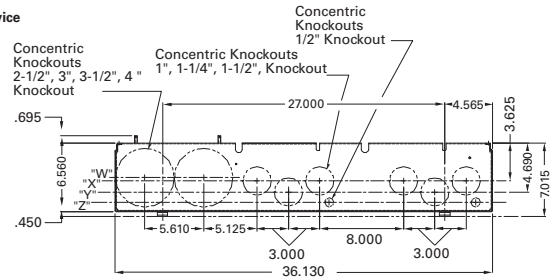

"Z" = ℄ of 1/2" Ring
"Y" = ℄ of 1-1/2" Ring
"X" = ℄ of 1-1/2" Ring
"W" = ℄ of 4" Ring

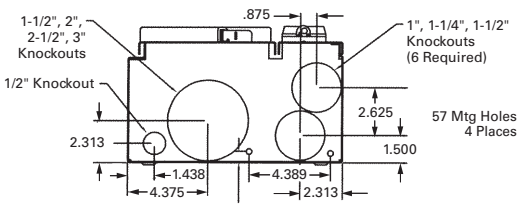

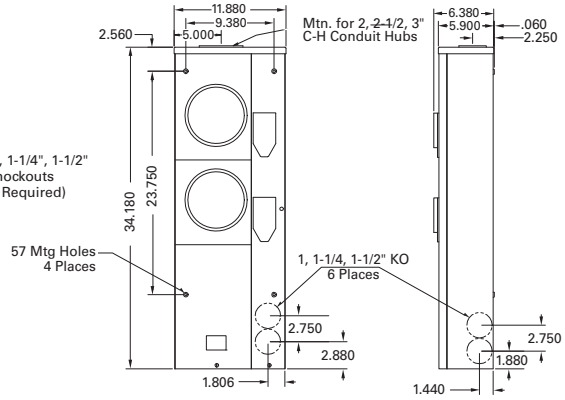

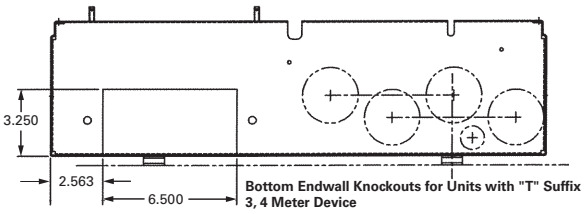

Bottom Endwall Knockouts for Units with "T" Suffix 3, 4 Meter Device

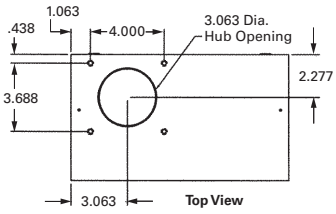

Top View

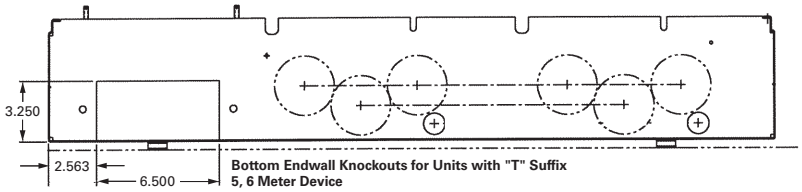

Bottom Endwall Knockouts for Units with "T" Suffix 5, 6 Meter Device

4

Approximate Dimensions in Inches (mm)

1MP, 200 Ampere Meter Packs—Aluminum and Copper Bus

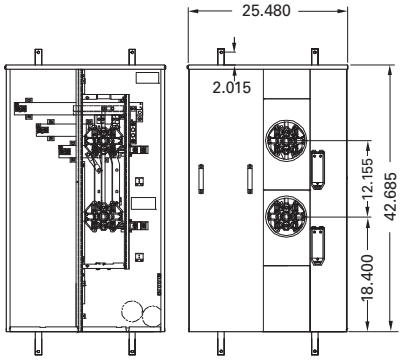

2 Meter Device

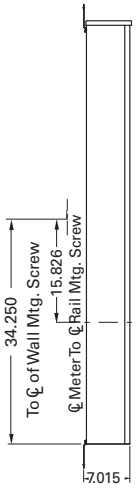

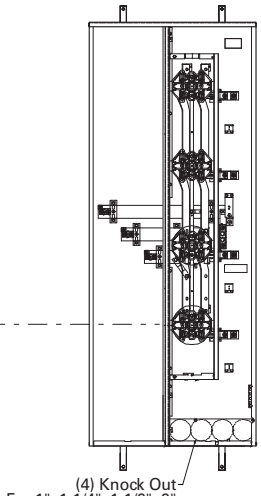

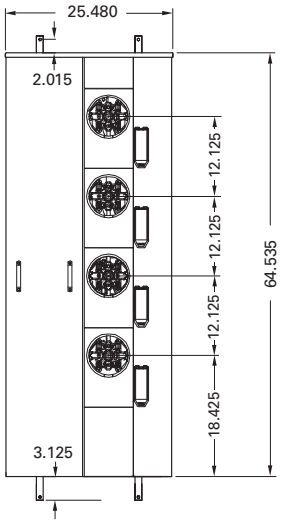

3, 4 Meter Device

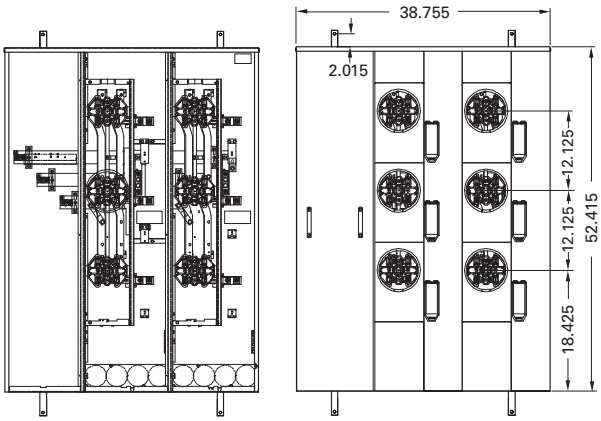

5, 6 Meter Device

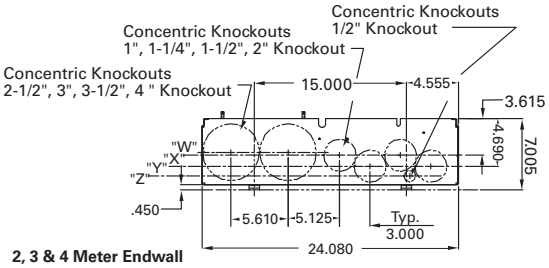

2, 3 & 4 Meter Endwall

"Z" = ℄ of 1/2" Ring
"Y" = ℄ of 1-1/2" Ring
"X" = ℄ of 1-1/2" Ring
"W" = ℄ of 4" Ring

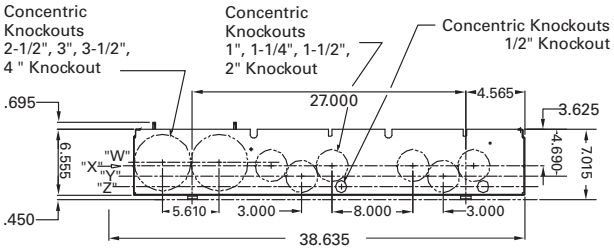

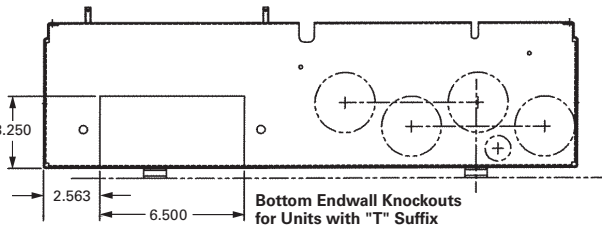

Bottom Endwall Knockouts
for Units with "T" Suffix
2, 3, 4 Meter Device

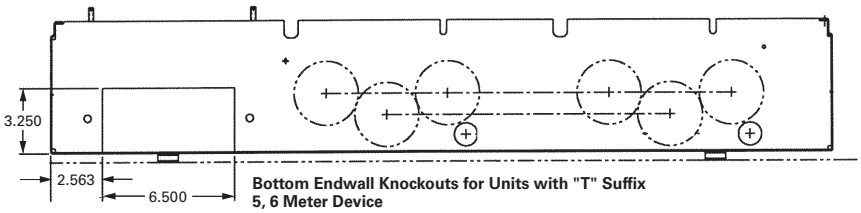

Bottom Endwall Knockouts for Units with "T" Suffix
5, 6 Meter Device

Contents

Description	Page
Systems for Residential and Commercial Applications	V1-T4-88
Meter Packs	V1-T4-90
Type CCV 120/240 V Tenant Main Circuit Breaker	V1-T4-95
Type CV 120/240 V Tenant Main Circuit Breaker	V1-T4-96
Meter Packs—1MP, 1MM and 3MM Main Tenant Circuit Breakers	V1-T4-98
Main Service Modules	
Surge Metering	V1-T4-115
Group Metering Inline Current Transformer Cabinets	V1-T4-116
Residential Meter Stacks	V1-T4-118
1MP, 1MM and 3MM Main Tenant Circuit Breakers	V1-T4-127
Phase Balanced Stack	V1-T4-128
Commercial Meter Stack Modules	V1-T4-129
35MM, 37MM, 35SS and 37SS Main Tenant Circuit Breakers	V1-T4-136

Main Service Modules

Product Description

- Main terminal box
- Main circuit breaker
- Main bolted pressure switch
- Main fusible switch
- Main fusible switch with pull box
- Underground pull box

Application Description

Main Circuit Breakers with Busway Connections

The Service Entrance Product Team announces the availability of both main fusible switch and main circuit breaker group metering mains with busway connections. This offering provides us with the ability to offer multiple tenant metering in high rise apartment buildings where riser busway is used.

Features, Benefits and Functions

Eaton's Main Service Module

- Offering: main terminal/lug compartment, main circuit breaker, main fusible switch, main bolted pressure switch, main fusible switch with pull box (meets EUSERC electrical requirements), underground pull box termination compartment without cross bus (meets EUSERC electrical requirements)
- Mechanically and electrically built for use with 1MM, 3MM, 35MM, 37MM, 35SS and 37SS modular metering stacks
- For integrated system short-circuit ratings with main devices, see series ratings on **Page V1-T4-144**
- All main service modules include both left and right horizontal bus closure plates
- Two-pole devices are applied to single-phase, three-wire, 120/240 V or 208Y/120 V systems, three-pole devices to 208Y/240 V or 120/240 V delta systems
- Single-phase mains couple to any modular metering stack (1MM, 3MM, 35MM, 37MM, 35SS and 37SS)
- Three-phase mains require three-phase bussed stacks. These modular metering stacks are 3MM, 35MM, 37MM, 35SS and 37SS
- If the ampere rating of the main service module is greater than the horizontal bus rating of the meter stack (residential or commercial), the main service module must be center fed. Examples: 1200 A Main Circuit Breaker (**1MCB1200R**) with an 800 A residential stack (**1MM512R**). 1600 A Main Terminal Box (**3MTB1600R**) with a 1200 A residential stack (**3MM212R12**)
- Most main service modules are available with aluminum or copper bus

Main Circuit Breakers with Busway Connections

- Three-phase, 400–200 A main circuit breakers
- Three-phase, 400–800 A main fusible switches
- Simple bridge joint connection
- Variety of options:
  - Right or left mounting
  - Internal ground or housing ground
- The MFS/MCB and busway connector are supplied completely assembled

Catalog Number Selection

3 MTB 400 R __ C

Phase
- **1** = Single-phase
- **3** = Three-phase

Type of Metering
- **BTB** = Main terminal box
- **MCB** = Main circuit breaker
- **BPS** = Bolted pressure switch
- **MFS** = Main fusible switch
- **UGPB** = Underground pull box
- **MTBE** = Main terminal box with utility pull box
- **MCBE** = Main circuit breaker with utility pull box

Ampere Rating
- **400 A**
- **600 A**
- **800 A**
- **1000 A**
- **1200 A**
- **1400 A**
- **1600 A**
- **2000 A**

Enclosure
- **R** = NEMA 3R

Accessories and Additional Options
- **BLK** = Box lug kit (accessory)
- **CLK** = Compression lug (accessory)
- **B** = Bottom feed
- **T** = Top feed
- **UG** = Pull box
- **Blank** = No options

Bus Material
- **C** = Copper bus
- **Blank** = Aluminum bus

When Ordering:

1. Determine catalog number of Main Service Module.
2. Determine catalog number of Meter Stack (Residential or Commercial).
3. Find quantity and catalog numbers for tenant circuit breakers (found on **Page V1-T4-127** or **V1-T4-137**). Order one breaker per socket.
4. If any accessories are needed, order from **Pages V1-T4-138** and **V1-T4-139**.

Product Selection

Main Terminal Box

- Phase and neutral lugs are included
- Top or bottom feed:
  - For top feed, use Myer type hub
- Indoor or outdoor
- Terminal box UL listed short-circuit rating is the least AIC rating of any installed main tenant breaker—to a maximum of 100,000 rms symmetrical amperes

Main Terminal Box

Main Terminal Box

Ampere Rating	Line Side Lug and Wire Sizes—Included	System Voltage 120/240 Vac Single-Phase, Three-Wire Catalog Number	120/208 Vac Three-Phase, Four-Wire Catalog Number
Aluminum Bus (Standard Offering)			
400	(1) #6–600 or (2) 1/0–250 kcmil ②	Use three-phase	**3MTB400R**
600	(2) 250–500 kcmil ③	Use three-phase	**3MTB600R**
800	(4) 250–500 kcmil ④⑤	**1MTB800R**	**3MTB800R**
1200 ①	(4) 250–500 kcmil ⑤⑥	**1MTB1200R**	**3MTB1200R**
Aluminum Bus (EUSERC)			
400	Crimp lug landing pads (no lugs included)	**1MTBE400R** ⑦	**3MTBE400R** ⑦
800	Crimp lug landing pads (no lugs included)	**1MTBE800R** ⑦	**3MTBE800R** ⑦
Copper Bus (Premium Offering)			
400	(1) #6–600 or (2) 1/0–250 kcmil ②	Use three-phase	**3MTB400RC**
600	(2) 250–500 kcmil ③	Use three-phase	**3MTB600RC**
800	(4) 250–500 kcmil ④⑤	**1MTB800RC**	**3MTB800RC**
1200 ①	(4) 250–500 kcmil ⑤⑥	**1MTB1200RC**	**3MTB1200RC**
1600 ①	(6) 500 kcmil ⑧	**1MTB1600RC**	**3MTB1600RC**

Main Terminal Box Riser Panel

Eaton's Main Terminal Box Riser Panel is a main terminal box with offset lugs on each phase to allow riser cables to pass through the main service module.

These panels are used in the construction of assisted living homes, dormitories, public housing complexes and apartments.

Main Terminal Box Riser Panel

Ampere Rating	Line and Load Side Lug and Wire Sizes Included	System Voltage 120/240 Vac Single-Phase, Three-Wire Catalog Number	120/208 Vac Three-Phase, Four-Wire Catalog Number
Copper Bus (Standard Offering)			
1200	#2 AWG–750 kcmil ①⑨	Use three-phase	**3MTB1200RCRIS**
1600	#2 AWG–750 kcmil ①⑨	Use three-phase	**3MTB1600RCRIS**

Notes

① 1200 A main devices must be center fed when installing 800 A residential meter stacks.
1600 A main devices must be center fed when installing 800–1200 A residential and commercial meter stacks.

② For 400 A units, to obtain (4) 750 kcmil cables per phase—order quantity 4 **1MPLK2**. Kit contains one lug.

③ For compression lug landing kits for 600 A units, order **3MTB600CLK**. Kit includes lug landings for three phases and neutral.

④ For 800 A units, to obtain (4) 1/0–300 kcmil or (2) 1/0–750 kcmil cables per phase—order catalog number **3MTB800BLK**, one lug kit per main terminal box ordered (neutral and ground included in kit).

⑤ For 800 A and 1200 A units, for compression lug landing kits, order **3MTB1200CLK**. Kit includes lug landings for three-phase and neutral.

⑥ For 1200 A units, to obtain (6) 1/0–300 kcmil or (3) 750 kcmil cables per phase—order catalog number **3MTB1200BLK**, one lug kit per main terminal box ordered (neutral and ground included in kit).

⑦ Meets EUSERC electrical requirements and eliminates the need to add additional pull box section. Reference drawing EUSERC DWG-343.

⑧ For 1600 A units, to obtain (4) 750 kcmil cables per phase—order catalog number **3MTB1600BLK**, one lug kit per main terminal box ordered. For a 1600 A compression lug landing kit, order catalog number **3MTB1600CLK**.

⑨ Quantity (10) lugs per phase—quantity (5) lugs incoming and quantity (5) lugs outgoing per phase.

Main Circuit Breaker

- Phase and neutral lugs included. If additional neutral lugs are needed, order 1MCB1200NLK for (3) 1/0–750 or (6) 1/0–300 kcmil
- For shunt trip mains, order the field-installable shunt trip kit in this volume, Tab 1, section 1.1
- For overhead feed, use Myer type hub. Verify local utility approval
- For compression lugs on 400, 600, 800, 1000 and 1200 A units, add CL to the end of the part number (includes copper lug pads for lines and neutral)
- 1200 A or greater main devices must be center fed when installing 800 A residential meter stacks
- 1400, 1600 and 2000 A main devices must be center fed when installing 800 and 1200 A residential and commercial meter stacks

Main Circuit Breaker

Main Circuit Breaker

Main Ampere Rating	Main Circuit Breaker Type	Feed	kAIC	Line Side Lug and Wire Sizes (Lugs Included with Main Breaker) ①	System Voltage 120/240 Vac Single-Phase, Three-Wire Catalog Number	System Voltage 120/208 Vac Three-Phase, Four-Wire Catalog Number
Aluminum Bus (Standard Offering) ②						
250	KD	Bottom/top	65	(2) 3/0–250 kcmil or (1) 2/0–500 kcmil	**1MCB250R**	**3MCB250R**
250	HKD	Bottom/top	100	(2) 3/0–250 kcmil or (1) 2/0–500 kcmil	**1MHCB250R**	**3MHCB250R**
300	KD	Bottom/top	65	(2) 3/0–250 kcmil or (1) 2/0–500 kcmil	**1MCB300R**	**3MCB300R**
300	HKD	Bottom/top	100	(2) 3/0–250 kcmil or (1) 2/0–500 kcmil	**1MHCB300R**	**3MHCB300R**
350	KD	Bottom/top	65	(2) 3/0–250 kcmil or (1) 2/0–500 kcmil	**1MCB350R**	**3MCB350R**
350	HKD	Bottom/top	100	(2) 3/0–250 kcmil or (1) 2/0–500 kcmil	**1MHCB350R**	**3MHCB350R**
400	KD	Bottom/top	65	(2) 3/0–250 kcmil or (1) 2/0–500 kcmil	**1MCB400R** ③	**3MCB400R** ③
400	HKD	Bottom/top	100	(2) 3/0–250 kcmil or (1) 2/0–500 kcmil	**1MHCB400R** ③	**3MHCB400R** ③
500	LD	Bottom/top	65	(2) 400–500 kcmil	**1MCB500R**	**3MCB500R**
500	HLD	Bottom/top	100	(2) 400–500 kcmil	**1MHCB500R**	**3MHCB500R**
600	LD	Bottom/top	65	(2) 400–500 kcmil	**1MCB600R** ③	**3MCB600R** ③
600	HLD	Bottom/top	100	(2) 400–500 kcmil	**1MHCB600R** ③	**3MHCB600R** ③
700	HMDL	Bottom/top	100	(3) 3/0–400 kcmil	**1MHCB700R**	**3MHCB700R**
700	MDL	Bottom/top	65	(3) 3/0–400 kcmil	**1MCB700R**	**3MCB700R**
800	MDL	Bottom/top	65	(3) 3/0–400 kcmil	**1MCB800R** ③	**3MCB800R** ③
800	MDL	Bottom/top	65	(2) 500–750 kcmil	**1MCB800R750**	**3MCB800R750**
800	HMDL	Bottom/top	100	(3) 3/0–400 kcmil	**1MHCB800R** ③	**3MHCB800R** ③
900	NGS	Bottom/top	65	(4) 4/0–500 kcmil ④	**1MCB900R** ⑤	**3MCB900R** ⑤
900	NGH	Bottom/top	100	(4) 4/0–500 kcmil ④	**1MHCB900R** ⑤	**3MHCB900R** ⑤
1000	NGS	Bottom/top	65	(4) 4/0–500 kcmil ④	**1MCB1000R** ③⑤	**3MCB1000R** ③⑤
1000	NGS	Bottom/top	65	(2) 500–750 kcmil	**1MCB1000R750**	**3MCB1000R750**
1000	NGH	Bottom/top	100	(4) 4/0–500 kcmil ④	**1MHCB1000R** ③⑤	**3MHCB1000R** ③⑤
1200	NGS	Bottom	65	(4) 4/0–500 kcmil ④	**1MCB1200R** ③⑤	**3MCB1200R** ③⑤
1200	NGH	Bottom	100	(4) 4/0–500 kcmil ④	**1MHCB1200R** ③⑤	**3MHCB1200R** ③⑤
1200	NGS	Bottom	65	(2) 500–750 kcmil	Use three-phase	**3MCB1200R750**

Notes

① If additional neutral lugs are needed, order **1MCB1200NLK** [(3) 1/0–750 kcmil or (6) 1/0–300 kcmil].
② Reference drawing EUSERC DWG-315.
③ Add CL to end of catalog number for compression lug pads (includes lug pads for lines and neutral).
④ If (3) 500–750 kcmil are needed, order **TA1201NB1**. Order one kit per pole.
⑤ Main devices with a rating greater than 800 A can be used with 800 A residential modular stacks, but only as a center fed main.

Main Circuit Breaker

Main Circuit Breaker

Main Circuit Breaker, continued

Main Ampere Rating	Main Circuit Breaker Type	Feed	kAIC	Line Side Lug and Wire Sizes (Lugs Included with Main Breaker) ①	System Voltage 120/240 Vac Single-Phase, Three-Wire Catalog Number	120/208 Vac Three-Phase, Four-Wire Catalog Number
Aluminum Bus (EUSERC) ②						
300	KD	Bottom/top	65	Crimp lug landing pads (no lugs included)	**1MCBE300R**	**3MCBE300R**
350	KD	Bottom/top	65	Crimp lug landing pads (no lugs included)	**1MCBE350R**	**3MCBE350R**
400	KD	Bottom/top	65	Crimp lug landing pads (no lugs included)	**1MCBE400R**	**3MCBE400R**
400	HKD	Bottom/top	100	Crimp lug landing pads (no lugs included)	**1MHCBE400R**	**3MHCBE400R**
500	LD	Bottom/top	65	Crimp lug landing pads (no lugs included)	**1MCBE500R**	**3MCBE500R**
600	LD	Bottom/top	65	Crimp lug landing pads (no lugs included)	**1MCBE600R**	**3MCBE600R**
600	HLD	Bottom/top	100	Crimp lug landing pads (no lugs included)	**1MHCBE600R**	**3MHCBE600R**
800	MDL	Bottom/top	65	Crimp lug landing pads (no lugs included)	**1MCBE800R**	**3MCBE800R**
800	HMDL	Bottom/top	100	Crimp lug landing pads (no lugs included)	**1MHCBE800R**	**3MHCBE800R**
1000	NGS	Bottom/top	65	Crimp lug landing pads (no lugs included)	**1MCBE1000R**	**3MCBE1000R**
1200	NGS	Bottom	65	Crimp lug landing pads (no lugs included)	**1MCBE1200R**	**3MCBE1200R**
1200	NGH	Bottom	100	Crimp lug landing pads (no lugs included)	**1MHCBE1200R**	**3MHCBE1200R**
Copper Bus (Premium Offering)						
400	KD	Bottom/top	65	(2) 3/0–250 kcmil or (1) 2/0-500 kcmil	**1MCB400RC** ③	**3MCB400RC** ③
400	HKD	Bottom/top	100	2/0–500 kcmil	**1MHCB400RC** ③	**3MHCB400RC** ③
600	LD	Bottom/top	65	(2) 300–500 kcmil	**1MCB600RC** ③	**3MCB600RC** ③
600	HLD	Bottom/top	100	(2) 300–500 kcmil	**1MHCB600RC** ③	**3MHCB600RC** ③
800	MDL	Bottom/top	65	(3) 3/0–400 kcmil	**1MCB800RC** ③	**3MCB800RC** ③
800	HMDL	Bottom/top	100	(3) 3/0–400 kcmil	**1MHCB800RC** ③	**3MHCB800RC** ③
900	NGS	Bottom/top	65	(4) 4/0–500 kcmil ④	**1MCB900RC** ⑤	**3MCB900RC** ⑤
900	NGH	Bottom/top	100	(4) 4/0–500 kcmil ④	**1MHCB900RC** ⑤	**3MHCB900RC** ⑤
1000	NGS	Bottom/top	65	(2) 500–750 kcmil	**1MCB1000R750C**	**3MCB1000R750C**
1000	NGS	Bottom/top	65	(4) 4/0–500 kcmil ④	**1MCB1000RC** ③⑤	**3MCB1000RC** ③⑤
1000	NGH	Bottom/top	100	(4) 4/0–500 kcmil ④	**1MHCB1000RC** ③⑤	**3MHCB1000RC** ③⑤
1200	NGS	Bottom	65	(2) 500–750 kcmil	Use three-phase	**3MCB1200R750C**
1200	NGS	Bottom	65	(4) 4/0–500 kcmil ④	**1MCB1200RC** ③⑤	**3MCB1200RC** ③⑤
1200	NGH	Bottom	100	(4) 4/0–500 kcmil ④	**1MHCB1200RC** ③⑤	**3MHCB1200RC** ③⑤
1400	RGH	Bottom	100	(4) 500–1000 kcmil ⑥	**1MCB1400RBC** ⑤⑦	**3MCB1400RBC** ⑤⑦
1400	RGH	Top	100	(4) 500–1000 kcmil ⑥	**1MCB1400RT** ⑧	**3MCB1400RT** ⑧
1600	RGH	Bottom	100	(4) 500–1000 kcmil ⑥	**1MCB1600RBC** ⑦⑧	**3MCB1600RBC** ⑦⑧
1600	RGH	Top	100	(4) 500–1000 kcmil ⑥	**1MCB1600RT** ⑧	**3MCB1600RT** ⑧
2000	RGH	Bottom	100	(6) #2–600 kcmil	**1MCB2000RBC** ⑦⑨	**3MCB2000RBC** ⑦⑨
2000	RGH	Top	100	(6) #2–600 kcmil	**1MCB2000RT** ⑨	**3MCB2000RT** ⑨
Copper Bus (EUSERC) ②						
1000	NGH	Bottom	100	Crimp lug landing pads (no lugs included)	**1MCBE1000RC**	**3MCBE1000RC**
1200	NGS	Bottom	65	Crimp lug landing pads (no lugs included)	**1MCBE1200RC**	**3MCBE1200RC**
1200	NGH	Bottom	100	Crimp lug landing pads (no lugs included)	**1MHCBE1200RC**	**3MHCBE1200RC**

Notes

① If additional neutral lugs are needed, order **1MCB1200NLK** [(3) 1/0–750 kcmil or (6) 1/0–300 kcmil].
② Reference drawing EUSERC DWG-315.
③ Add CL to end of catalog number for compression lug pads (includes lug pads for lines and neutral).
④ If (3) 500–750 kcmil are needed, order **TA1201NB1**. Order one kit per pole.
⑤ Main devices with a rating greater than 800 A can be used with 800 A residential modular stacks but only as a center fed main.
⑥ If (6) #2–600 kcmil lugs are needed, order **TA2000RD**. Catalog number includes terminals and hardware for three poles. If neutral is needed, order **TA2000N**.
⑦ Copper bus.
⑧ Main devices with a rating greater than 1200 A can be used with residential and commercial modular metering stacks but only as a center fed main.
⑨ Only to be used in center feed applications with 1200 A meter stacks. Not to be used with 800 A stacks.

Main Fusible Switches

- Fuses not included
- Main lugs and neutral included with device
- 100 kAIC rating on switches with Class T fuses installed. If converting to Class H, the kAIC rating is 10 and if converted to Class R, the kAIC rating is 200

Note: This is the fuse rating, switch still rated at 100 kAIC.

- 800 A top and bottom fed units are supplied with Class T fuse clips as standard. The Class T fuse clips are field convertible to Class L by repositioning. No kit is needed
- Barrier kits available for 400–800 A fusible switches: Bottom feed—**3MFSBBK**, Top feed—**3MFSTBK**

Main Fusible Switches

Main Fusible Switches

Ampere Rating	Feed	Class Fuse Clips (Fuses Not Included)	Line Side Box Lugs and Wire Sizes (Included with Switch)	System Voltage 120/240 Vac Single-Phase, Three-Wire Catalog Number	120/208 Vac Three-Phase, Four-Wire Catalog Number
Aluminum Bus (Standard Offering)					
400	Bottom	T ①	(2) 1/0–300 kcmil or (1) 750 kcmil ④⑤	**1MFS400RB**	**3MFS400RB**
400	Top	T ①	(2) 1/0–300 kcmil or (1) 750 kcmil ⑤⑥	**1MFS400RT**	**3MFS400RT**
600	Bottom	T ②	(2) #2–600 kcmil ④⑤	**1MFS600RB**	**3MFS600RB**
600	Top	T ②	(2) #2–600 kcmil ⑤⑥	**1MFS600RT**	**3MFS600RT**
800	Bottom	T, L ③	(4) 3/0–750 kcmil ④	**1MFS800RB**	**3MFS800RB**
800	Top	T, L ③	(4) 3/0–750 kcmil ⑥	**1MFS800RT**	**3MFS800RT**
1200	Bottom	T, L ③	(4) #2–600 kcmil ⑦	**1MFS1200RB**	**3MFS1200RB**
Copper Bus (Premium Offering)					
400	Bottom	T ①	(2) 1/0–300 kcmil or (1) 750 kcmil ④⑤	**1MFS400RBC**	**3MFS400RBC**
400	Top	T ①	(2) 1/0–300 kcmil or (1) 750 kcmil ⑤⑥	**1MFS400RTC**	**3MFS400RTC**
600	Bottom	T ②	(2) #2–600 kcmil ④⑤	**1MFS600RBC**	**3MFS600RBC**
600	Top	T ②	(2) #2–600 kcmil ⑤⑥	**1MFS600RTC**	**3MFS600RTC**
800	Bottom	T, L ③	(4) 3/0–750 kcmil ④	**1MFS800RBC**	**3MFS800RBC**
800	Top	T, L ③	(4) 3/0–750 kcmil ⑥	**1MFS800RTC**	**3MFS800RTC**
1200	Bottom	T, L ③	(4) #2–600 kcmil ⑦	**1MFS1200RBC**	**3MFS1200RBC**

Notes

① If Class H fuse clips are needed, use catalog number **WCG3HK400** (order (1) per phase).
If Class R fuse clips are needed, order catalog number **DS56FK** in addition to **WCG3HK400**.
In order to go from T to R, the device must first be converted to H.
All kits are field installable and each **DS56FK** kit will convert three poles.

② If Class H fuse clips are needed, use catalog number **WCG3HK600** (order (1) per phase).
If Class R fuse clips are needed, order catalog number **DS66FK** in addition to **WCG3HK600**.
In order to go from T to R, the device must first be converted to H.
All kits are field installable and each **DS66FK** kit will convert three poles.

③ Class T fuse clips provided are field convertible to Class L by repositioning. No kit is needed.

④ If compression lugs are being used, order **3MFS800CLK**. This compression lug kit includes four pads (three poles and neutral).

⑤ 1MFS600BLK (4) 3/0–750 kcmil/phase (one kit/phase and one kit/neutral).

⑥ If compression lugs are being used, order **3MFS800CLKT**. This compression lug kit includes four pads (three poles and neutral).

⑦ IMFS1200LK (3) 750 kcmil/phase (one kit/phase). IMFS1200LKN (3) 750 kcmil (neutral).

Main Fusible Switch with Utility Pull Box

- Fuses not included
- Includes lug landing pads on line side and neutral
- Spacer kit 3MMBSK required when stacks are mounted on right-hand side in EUSERC areas
- 100 kAIC rating on switches with Class T fuse clips installed

Main Fusible Switch with Utility Pull Box

Main Fusible Switch with Utility Pull Box ①

Ampere Rating	Feed	Class Fuse Clips (Fuses Not Included)	Line Side Box Lugs and Wire Sizes (Included with Switch)	System Voltage 120/240 Vac Single-Phase, Three-Wire Catalog Number	System Voltage 120/208 Vac Three-Phase, Four-Wire Catalog Number
Aluminum Bus (Standard Offering)					
400	Bottom	T	②	**1MFS400RUG**	**3MFS400RUG**
600	Bottom	T	②	**1MFS600RUG**	**3MFS600RUG**
800	Bottom	T, L	②	**1MFS800RUG**	**3MFS800RUG**
1200	Bottom	T	②	**1MFS1200RUG**	**3MFS1200RUG**
Copper Bus (Premium Offering)					
400	Bottom	T	②	**1MFS400RUGC**	**3MFS400RUGC**
600	Bottom	T	②	**1MFS600RUGC**	**3MFS600RUGC**
800	Bottom	T, L	②	**1MFS800RUGC**	**3MFS800RUGC**
1200	Bottom	T	②	**1MFS1200RUGC**	**3MFS1200RUGC**

Utility Pull Box

- Includes lug landing pads on line side and neutral
- Requires cable connection in field to main device; does not include horizontal cross bus

Pull Box ③

Ampere Rating	Feed	Line Side Lug Information	Load Side Lug Information for Cable Connection to Main Disconnect	System Voltage 120/240 Vac Single-Phase, Three-Wire Catalog Number	System Voltage 120/208 Vac Three-Phase, Four-Wire Catalog Number
Aluminum Bus (Standard Offering)					
400	Bottom	②	1/0–750 kcmil or (2) 1/0–300 kcmil	**1UGPB400R**	**3UGPB400R**
800	Bottom	②	(2) 1/0–750 kcmil or (4) 1/0–300 kcmil	**1UGPB800R**	**3UGPB800R**
1200	Bottom	②	(4) #2–600 kcmil	**1UGPB1200R**	**3UGPB1200R**
Copper Bus (Premium Offering)					
400	Bottom	②	1/0–750 kcmil or (2) 1/0–300 kcmil	**1UGPB400RC**	**3UGPB400RC**
800	Bottom	②	(2) 1/0–750 kcmil or (4) 1/0–300 kcmil	**1UGPB800RC**	**3UGPB800RC**
1200	Bottom	②	(4) #2–600 kcmil	**1UGPB1200RC**	**3UGPB1200RC**

Notes

① Reference drawing EUSERC DWG-315.
② Pull box section includes landing studs for line side compression lugs. Wire sizes refer to load side connection.
③ Reference drawing EUSERC DWG-343.

Main Bolted Pressure Contact Switches

- Add suffix ST to catalog number for shunt trip
- Fuses not included
- 100 kAIC rating on switches with Class L fuses installed

Main Bolted Pressure Contact Switches

Ampere Rating	Feed	Class Fuse Clips (Fuses Not Included)	System Voltage 120/240 Vac Single-Phase, Three-Wire Catalog Number	120/208 Vac Three-Phase, Four-Wire Catalog Number	Line Side Box Lugs and Wire Sizes (Included)
Copper Bus					
1200	Bottom	L	**1BPS1200RB**	**3BPS1200RB**	(4) #4–600 kcmil
1200	Top	L	**1BPS1200RT**	**3BPS1200RT**	(4) #4–600 kcmil
1600	Bottom	L	Use three-phase	**3BPS1600RB**	(6) #4–600 kcmil
1600	Top	L	Use three-phase	**3BPS1600RT**	(6) #4–600 kcmil
2000	Bottom	L	Use three-phase	**3BPS2000RB**	(8) #4–600 kcmil
2000	Top	L	Use three-phase	**3BPS2000RT**	(8) #4–600 kcmil

Main Circuit Breaker with Busway Connection

Verify proper left/right–bus/main phasing.

Note: "Right" means that the bus duct is to the right of the main and "left" means that the bus duct is to the left of the main. (See Dimension/Layout section for clarification.)

Using this information, select the correct main device catalog number per the selection chart.

Main Circuit Breaker with Busway Connection

Ampere Rating	Feed	System Voltage 120/208 Vac Three-Phase, Four-Wire Catalog Number	Internal Ground or Housing Ground	Standard T or TO Opposite Phasing	Right or Left Side
400	Bottom	**3MFS400BCRGTO**	Internal	TO	Right
600	Bottom	**3MFS600BCRGTO**	Internal	TO	Right
800	Bottom	**3MFS800BCRGTO**	Internal	TO	Right
400	Bottom	**3MFS400BCLGTO**	Internal	TO	Left
600	Bottom	**3MFS600BCLGTO**	Internal	TO	Left
800	Bottom	**3MFS800BCLGTO**	Internal	TO	Left
400	Bottom	**3MFS400BCRGT**	Internal	T	Right
600	Bottom	**3MFS600BCRGT**	Internal	T	Right
800	Bottom	**3MFS800BCRGT**	Internal	T	Right
400	Bottom	**3MFS400BCLGT**	Internal	T	Left
600	Bottom	**3MFS600BCLGT**	Internal	T	Left
800	Bottom	**3MFS800BCLGT**	Internal	T	Left
400	Bottom	**3MFS400BCRNTO**	Housing	TO	Right
600	Bottom	**3MFS600BCRNTO**	Housing	TO	Right
800	Bottom	**3MFS800BCRNTO**	Housing	TO	Right
400	Bottom	**3MFS400BCLNTO**	Housing	TO	Left
600	Bottom	**3MFS600BCLNTO**	Housing	TO	Left
800	Bottom	**3MFS800BCLNTO**	Housing	TO	Left
400	Bottom	**3MFS400BCRNT**	Housing	T	Right
600	Bottom	**3MFS600BCRNT**	Housing	T	Right
800	Bottom	**3MFS800BCRNT**	Housing	T	Right
400	Bottom	**3MFS400BCLNT**	Housing	T	Left
600	Bottom	**3MFS600BCLNT**	Housing	T	Left
800	Bottom	**3MFS800BCLNT**	Housing	T	Left
400	Bottom	**3MCB400BCRGT**	Internal	T	Right
400	Bottom	**3HMCB400BCRGT**	Internal	T	Right
600	Bottom	**3MCB600BCRGT**	Internal	T	Right
600	Bottom	**3HMCB600BCRGT**	Internal	T	Right
800	Bottom	**3MCB800BCRGT**	Internal	T	Right
800	Bottom	**3HMCB800BCRGT**	Internal	T	Right
1000	Bottom	**3MCB1000BCRGT**	Internal	T	Right
1000	Bottom	**3HMCB1000BCRGT**	Internal	T	Right
1200	Bottom	**3MCB1200BCRGT**	Internal	T	Right
1200	Bottom	**3HMCB1200BCRGT**	Internal	T	Right
400	Bottom	**3MCB400BCLGT**	Internal	T	Left
400	Bottom	**3HMCB400BCLGT**	Internal	T	Left
600	Bottom	**3MCB600BCLGT**	Internal	T	Left
600	Bottom	**3HMCB600BCLGT**	Internal	T	Left
800	Bottom	**3MCB800BCLGT**	Internal	T	Left
800	Bottom	**3HMCB800BCLGT**	Internal	T	Left
1000	Bottom	**3MCB1000BCLGT**	Internal	T	Left
1000	Bottom	**3HMCB1000BCLGT**	Internal	T	Left
1200	Bottom	**3MCB1200BCLGT**	Internal	T	Left
1200	Bottom	**3HMCB1200BCLGT**	Internal	T	Left
400	Bottom	**3MCB400BCRNT**	Housing	T	Right
400	Bottom	**3HMCB400BCRNT**	Housing	T	Right
600	Bottom	**3MCB600BCRNT**	Housing	T	Right
600	Bottom	**3HMCB600BCRNT**	Housing	T	Right
800	Bottom	**3MCB800BCRNT**	Housing	T	Right
800	Bottom	**3HMCB800BCRNT**	Housing	T	Right
1000	Bottom	**3MBC1000BCRNT**	Housing	T	Right
1000	Bottom	**3HMBC1000BCRNT**	Housing	T	Right

Main Circuit Breaker with Busway Connection, continued

Ampere Rating	Feed	System Voltage 120/208 Vac Three-Phase, Four-Wire Catalog Number	Internal Ground or Housing Ground	Standard T or TO Opposite Phasing	Right or Left Side
1200	Bottom	**3MCB1200BCRNT**	Housing	T	Right
1200	Bottom	**3HMCB1200BCRNT**	Housing	T	Right
400	Bottom	**3MCB400BCLNT**	Housing	T	Left
400	Bottom	**3HMCB400BCLNT**	Housing	T	Left
600	Bottom	**3MCB600BCLNT**	Housing	T	Left
600	Bottom	**3HMCB600BCLNT**	Housing	T	Left
800	Bottom	**3MCB800BCLNT**	Housing	T	Left
800	Bottom	**3HMCB800BCLNT**	Housing	T	Left
1000	Bottom	**3MCB1000BCLNT**	Housing	T	Left
1000	Bottom	**3HMCB1000BCLNT**	Housing	T	Left
1200	Bottom	**3MCB1200BCLNT**	Housing	T	Left
1200	Bottom	**3HMCB1200BCLNT**	Housing	T	Left
400	Bottom	**3MCB400BCRGTO**	Internal	TO	Right
400	Bottom	**3HMCB400BCRGTO**	Internal	TO	Right
600	Bottom	**3MCB600BCRGTO**	Internal	TO	Right
600	Bottom	**3HMCB600BCRGTO**	Internal	TO	Right
800	Bottom	**3MCB800BCRGTO**	Internal	TO	Right
800	Bottom	**3HMCB800BCRGTO**	Internal	TO	Right
1000	Bottom	**3MCB1000BCRGTO**	Internal	TO	Right
1000	Bottom	**3HMCB1000BCRGTO**	Internal	TO	Right
1200	Bottom	**3MCB1200BCRGTO**	Internal	TO	Right
1200	Bottom	**3HMCB1200BCRGTO**	Internal	TO	Right
400	Bottom	**3MCB400BCLGTO**	Internal	TO	Left
400	Bottom	**3HMCB400BCLGTO**	Internal	TO	Left
600	Bottom	**3MCB600BCLGTO**	Internal	TO	Left
600	Bottom	**3HMCB600BCLGTO**	Internal	TO	Left
800	Bottom	**3MCB800BCLGTO**	Internal	TO	Left
800	Bottom	**3HMCB800BCLGTO**	Internal	TO	Left
1000	Bottom	**3MCB1000BCLGTO**	Internal	TO	Left
1000	Bottom	**3HMCB1000BCLGTO**	Internal	TO	Left
1200	Bottom	**3MCB1200BCLGTO**	Internal	TO	Left
1200	Bottom	**3HMCB1200BCLGTO**	Internal	TO	Left
400	Bottom	**3MCB400BCRNTO**	Housing	TO	Right
400	Bottom	**3HMCB400BCRNTO**	Housing	TO	Right
600	Bottom	**3MCB600BCRNTO**	Housing	TO	Right
600	Bottom	**3HMCB600BCRNTO**	Housing	TO	Right
800	Bottom	**3MCB800BCRNTO**	Housing	TO	Right
800	Bottom	**3HMCB800BCRNTO**	Housing	TO	Right
1000	Bottom	**3MCB1000BCRNTO**	Housing	TO	Right
1000	Bottom	**3HMCB1000BCRNTO**	Housing	TO	Right
1200	Bottom	**3MCB1200BCRNTO**	Housing	TO	Right
1200	Bottom	**3HMCB1200BCRNTO**	Housing	TO	Right
400	Bottom	**3MCB400BCLNTO**	Housing	TO	Left
400	Bottom	**3HMCB400BCLNTO**	Housing	TO	Left
600	Bottom	**3MCB600BCLNTO**	Housing	TO	Left
600	Bottom	**3HMCB600BCLNTO**	Housing	TO	Left
800	Bottom	**3HMCB800BCLNTO**	Housing	TO	Left
800	Bottom	**3HMCB800BCLNTO**	Housing	TO	Left
1000	Bottom	**3MCB1000BCLNTO**	Housing	TO	Left
1000	Bottom	**3HMCB1000BCLNTO**	Housing	TO	Left
1200	Bottom	**3MCB1200BCLNTO**	Housing	TO	Left
1200	Bottom	**3HMCB1200BCLNTO**	Housing	TO	Left

Dimensions

Approximate Dimensions in Inches (mm)

Dimensions (Not to be Used for Construction Purposes)

Main Device	Width A	Height B	Depth C	Mounting D	E	Center Line of Wall Mounting Bracket F	Knockouts in Bottom Endwalls Except No KOs for Top Feed Switch or Bolted Pressure Switch Conduit Diameter Inches	mm	KO Dwg.
Terminal Box									
400 and 600 A	13.50 (342.9)	48.75 (1238.3)	7.00 (177.8)	—	54.00 (1371.6)	30.63 (777.9)	(1) 2.50, 3.00, 3.50, 4.00 (1) 0.50	(1) 63.5, 76.2, 88.9, 101.6 (1) 12.7	1
800 and 1200 A	20.00 (508.0)	47.63 (1209.8)	11.75 (298.5)	12.00 (304.8)	51.50 (1308.1)	30.63 (777.9)	(2) 0.50, 0.75, 1.00 (4) 2.00, 2.50, 3.00, 3.50, 4.00	(2) 12.1, 19.1, 25.4 (4) 50.8, 63.5, 76.2, 88.9, 101.6	2
1600 A	32.88 (835.2)	60.13 (1527.3)	11.44 (290.6)	16.00 (406.4)	64.13 (1628.9)	38.59 (980.2)	(1) 0.75, 1.00, 1.25, 1.50 (5) 3.00, 3.50, 4.00, 5.00	(1) 19.1, 25.4, 31.8, 38.1 (5) 76.2, 88.9, 101.6, 127.0	3
Main Circuit Breaker with Box Lugs									
400–1200 A	20.00 (508.0)	47.63 (1209.8)	11.75 (298.5)	12.00 (304.8)	51.50 (1308.1)	30.63 (777.9)	(2) 0.50, 0.75, 1.00 (4) 2.00, 2.50, 3.00,3.50, 4.00	(2) 12.7, 19.1, 25.4 (4) 50.8, 63.5, 76.2, 88.9, 101.6	2
1400–2000 A	24.88 (632.0)	57.13 (1451.0)	14.88 (378.0)	16.00 (406.4)	57.13 (1451.0)	44.00 (1117.6)	—	—	—
Main Circuit Breaker with Compression Lugs									
400–1200 A	20.00 (508.0)	61.00 (1549.4)	11.75 (298.5)	12.00 (304.8)	65.00 (1651.0)	44.00 (1117.6)	(2) 0.50, 0.75, 1.00 (4) 2.00, 2.50, 3.00, 3.50, 4.00	(2) 12.7, 19.1, 25.4 (4) 50.8, 63.5, 76.2, 88.9, 101.60	2
Main Fusible Switch									
Bottom feed 400–800 A	20.00 (508.0)	47.63 (1209.8)	11.75 (298.5)	12.00 (304.8)	51.50 (1308.1)	30.63 (777.9)	(2) 0.50, 0.75, 1.00 (4) 2.00, 2.50, 3.00, 3.50, 4.00	(2) 12.7, 19.1, 25.4 (4) 50.8, 63.5, 76.2, 88.9, 101.6	2
Top feed 400–800 A	20.00 (508.0)	47.63 (1209.8)	11.75 (298.5)	12.00 (304.8)	51.50 (1308.1)	18.13 (460.4)	(2) 0.50, 0.75, 1.00 (4) 2.00, 2.50, 3.00, 3.50, 4.00	(2) 12.7, 19.1, 25.4 (4) 50.8, 63.5, 76.2, 88.9, 101.6	2
1200 A	33.50 (850.9)	52.75 (1339.9)	11.88 (301.8)	16.00 (406.4)	56.25 (1428.8)	30.75 (781.1)	(5) 3.50, 4.00, 5.00 (1) 0.75, 1.00, 1.25, 1.50	(5) 88.9, 101.6, 127.0 (1) 19.1, 25.4, 31.8, 38.1	4
Bolted Pressure Switch									
	36.50 (927.1)	66.50 (1689.1)	19.50 (495.3)	28.00 (711.2)	60.00 (1524.0)	30.63 (777.9)	—	—	—
Main Fusible Switch with Pull Box									
400 A	20.00 (508.0)	61.00 (1549.4)	11.75 (298.5)	12.00 (304.8)	65.00 (1651.0)	44.00 (1117.6)	(2) 0.50, 0.75, 1.00 (4) 2.00, 2.50, 3.00, 3.50, 4.00	(2) 12.7, 19.1, 25.4 (4) 50.8, 63.5, 76.2, 88.9, 101.6	2
600 and 800 A (single-phase)	20.00 (508.0)	61.00 (1549.4)	11.75 (298.5)	12.00 (304.8)	65.00 (1651.0)	44.00 (1117.6)	(2) 0.50, 0.75, 1.00 (4) 2.00, 2.50, 3.00, 3.50, 4.00	(2) 12.7, 19.1, 25.4 (4) 50.8, 63.5, 76.2, 88.9, 101.6	2
600 and 800 A (three-phase)	25.06 (636.5)	61.00 (1549.4)	11.75 (298.5)	17.00 (431.8)	65.00 (1651.0)	44.00 (1117.6)	(2) 0.50, 0.75, 1.00 (4) 2.00, 2.50, 3.00, 3.50, 4.00	(2) 12.7, 19.1, 25.4 (4) 50.8, 63.5, 76.2, 88.9, 101.6	4
1200 A	33.50 (850.9)	61.50 (1562.1)	11.88 (301.8)	16.00 (406.4)	65.25 (1657.4)	48.00 (1219.2)	(5) 3.50, 4.00, 5.00 (1) 0.75, 1.00, 1.25, 1.50	(5) 88.9, 101.6, 127.0 (1) 19.1, 25.4, 31.8, 38.1	4
Main Circuit Breaker with Pull Box (EUSERC)									
400 A	20.01 (508.2)	60.44 (1535.2)	11.14 (283.0)	12.00 (304.8)	65.11 (1653.8)	39.75 (1009.6)	(4) 2.50, 3.00, 3.50, 4.00	(4) 63.5, 76.2, 88.9, 101.6	2
800 A	24.88 (632.0)	60.94 (1547.9)	11.14 (283.0)	17.00 (431.8)	64.88 (1648.0)	39.81 (1011.2)	(4) 2.50, 3.00, 3.50, 4.00	(4) 63.5, 76.2, 88.9, 101.6	2
1200 A	33.00 (838.2)	61.14 (1553.0)	11.32 (287.5)	16.00 (406.4)	65.25 (1657.4)	43.56 (1106.4)	(4) 2.50, 3.00, 3.50, 4.00	(4) 63.5, 76.2, 88.9, 101.6	4
Pull Box									
400 A	16.38 (416.1)	44.88 (1140.0)	7.88 (200.2)	8.00 (203.2)	45.75 (1162.1)	28.63 (727.2)	(2) 4.00	101.6	5
800 A	24.38 (619.3)	46.88 (1190.8)	11.88 (301.8)	12.00 (304.8)	47.75 (1212.9)	32.25 (819.2)	(3) 4.00	101.6	6
1200 A	32.50 (825.5)	56.88 (1444.8)	12.00 (304.8)	17.75 (450.9)	57.75 (1466.9)	42.25 (1073.2)	(4) 5.00	127.0	7
EUSERC Bussed Pull Section									
Single-phase 400 and 800 A	20.13 (511.3)	61.00 (1549.4)	11.25 (285.8)	12.00 (304.8)	64.88 (1648.0)	44.00 (1117.6)	(4) 2.50, 3.00, 3.50, 4.00	(4) 63.5, 76.2, 88.9, 101.6	5
Three-phase 400 and 800 A	25.13 (638.3)	61.00 (1549.4)	11.88 (301.8)	17.00 (431.8)	64.88 (1648.0)	44.00 (1117.6)	(4) 2.50, 3.00, 3.50, 4.00	(4) 63.5, 76.2, 88.9, 101.6	6
EUSERC Main Terminal Box									
Single-phase 400 and 800 A	20.13 (511.3)	61.00 (1549.4)	11.88 (301.8)	12.00 (304.8)	64.88 (1648.0)	44.00 (1117.6)	(2) 0.50, 0.75, 1.00	(2) 12.7, 19.1, 25.4	2
Three-phase 400 A	20.13 (511.3)	61.00 (1549.4)	11.88 (301.8)	12.00 (304.8)	64.88 (1648.0)	44.00 (1117.6)	(4) 2.00, 2.50, 3.00, 3.50, 4.00	(4) 50.8, 63.5, 76.2, 88.9, 101.6	2
Three-phase 800 A	25.13 (638.3)	61.00 (1549.4)	11.88 (301.8)	17.00 (431.8)	64.88 (1648.0)	44.00 (1117.6)	(4) 2.00, 2.50, 3.00, 3.50, 4.00	(4) 50.8, 63.5, 76.2, 88.9, 101.6	2

Approximate Dimensions in Inches (mm)

Main Circuit Breakers, Terminal Boxes and Pull Boxes

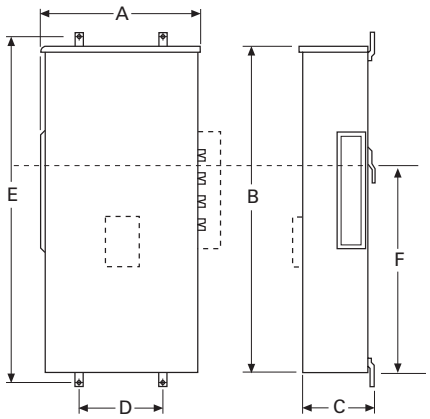

Main CB, Non-Euserc Terminal Box and Pullboxes

Bolted Pressure Switch

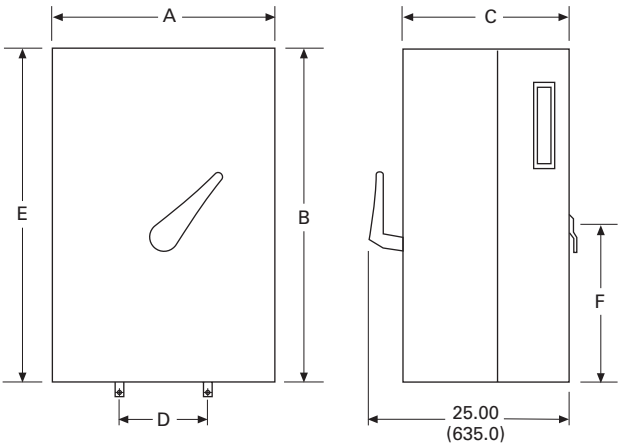

Top Feed Fusible Switch

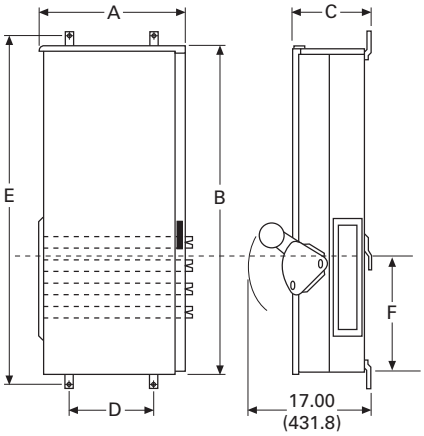

Top Feed Switch (No Knockouts)

EUSERC Main Terminal Box

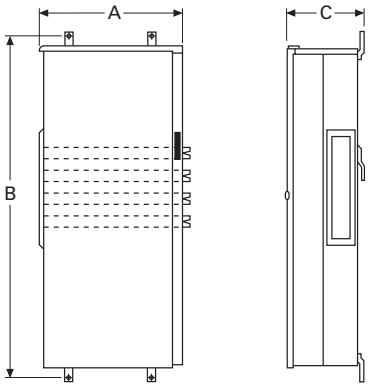

Bottom Feed Fusible Switch and Combination Fusible Switch with Pull Box

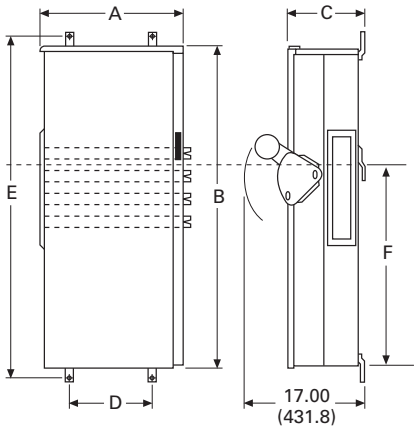

Bottom Feed Switch and Combination Switch/Pullbox

Approximate Dimensions in Inches (mm)

Knockout 1

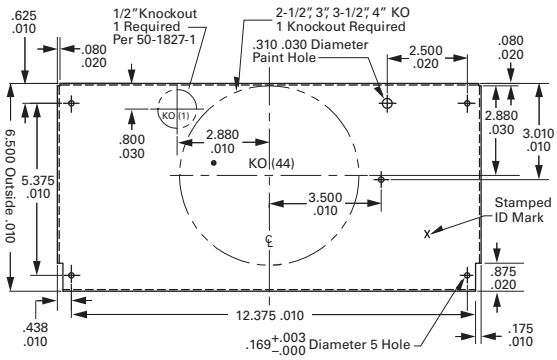

Knockout 2

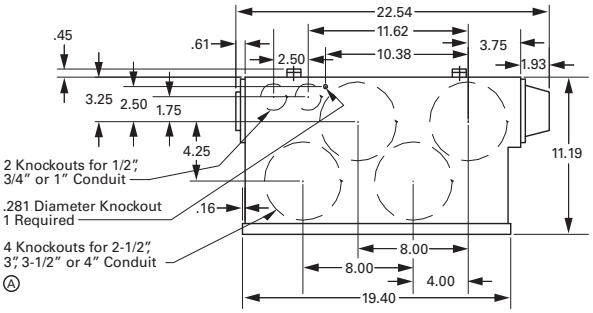

Knockout 3

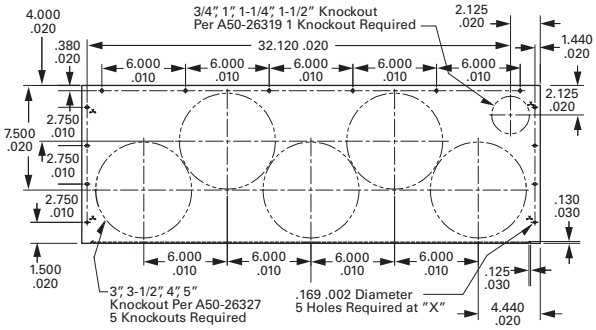

Knockout 4

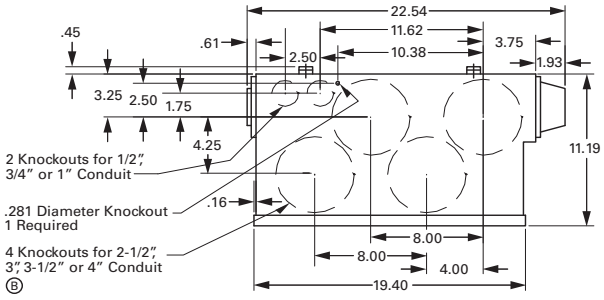

Knockout 5

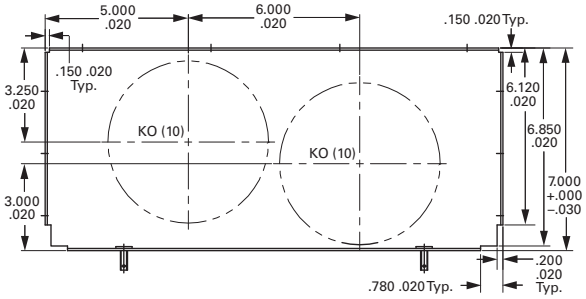

Knockout 6

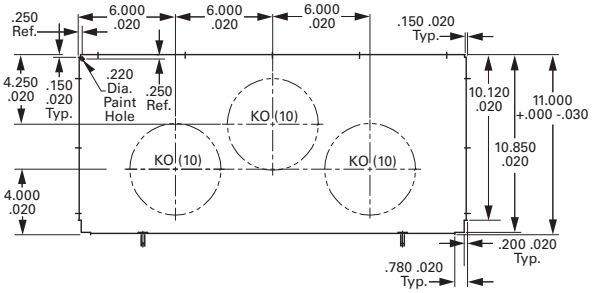

Knockout 7

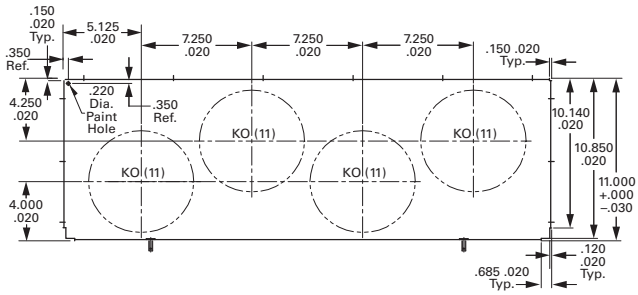

Knockout 8

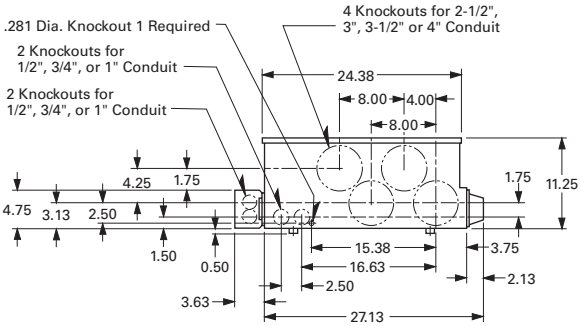

Approximate Dimensions in Inches (mm)

Layout—Main Fusible Switch

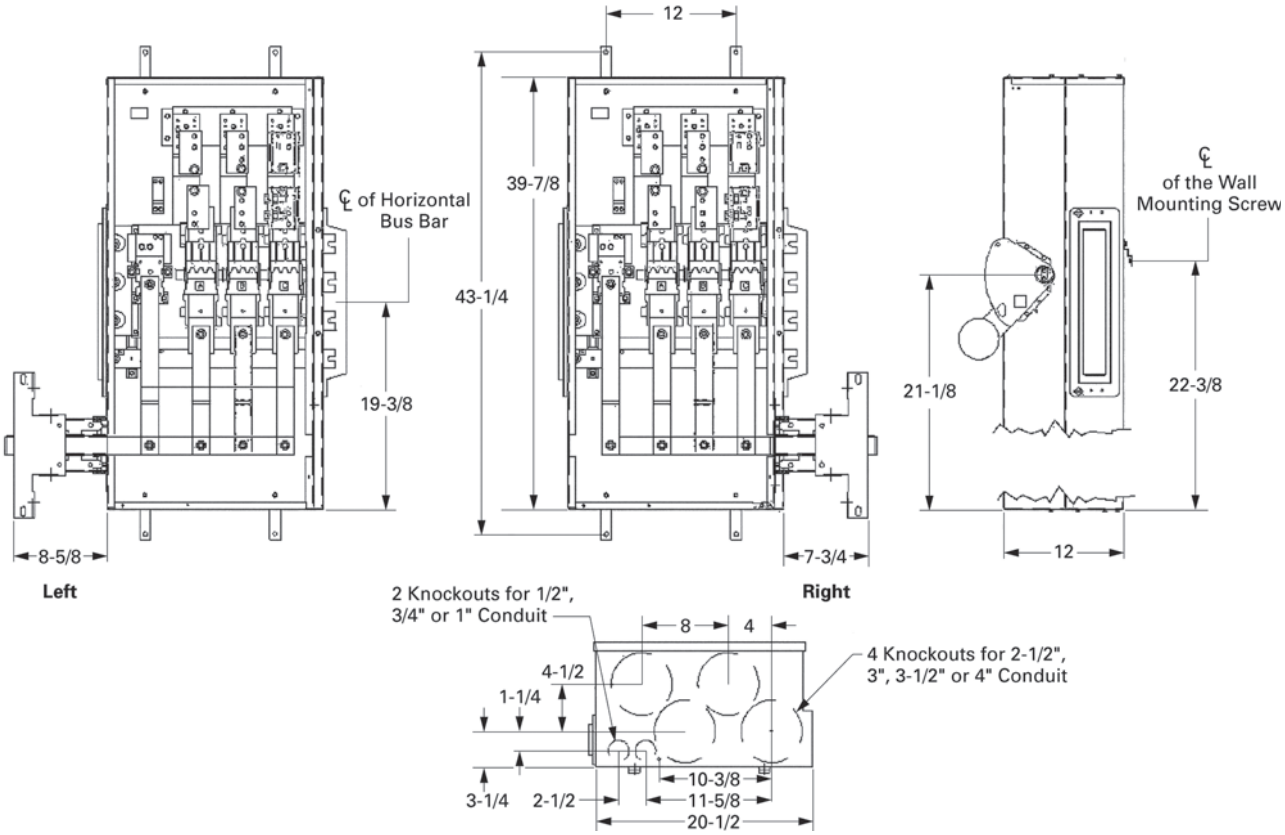

Approximate Dimensions in Inches (mm)

Main Circuit Breaker—"T-Opposite" Phasing Right

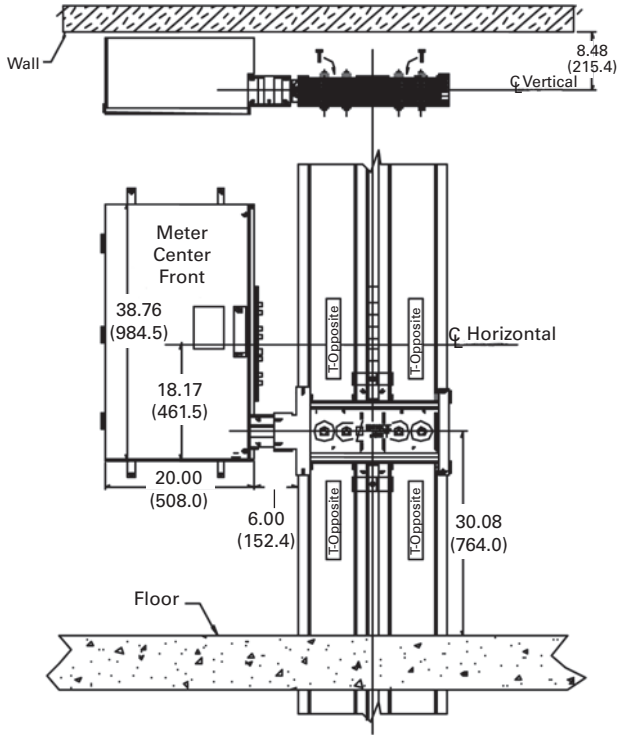

Main Circuit Breaker—"Standard T" Phasing Right

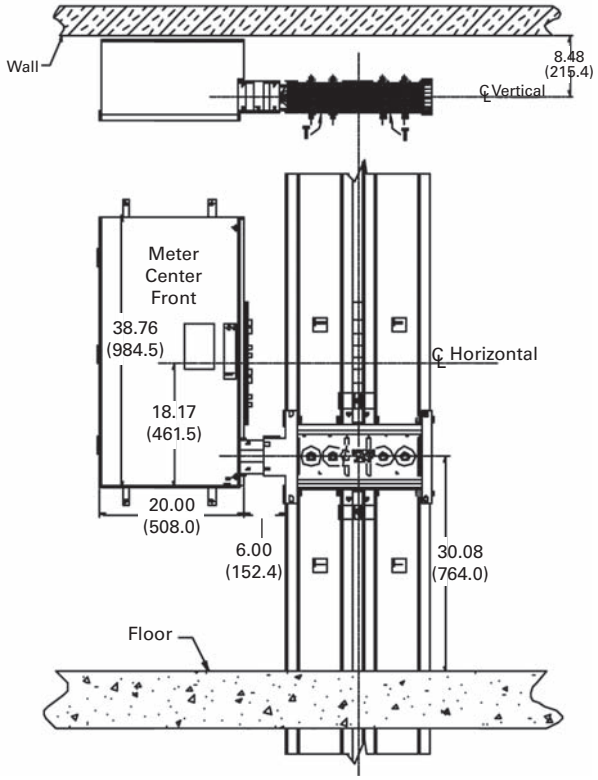

Main Circuit Breaker—"T-Opposite" Phasing Left

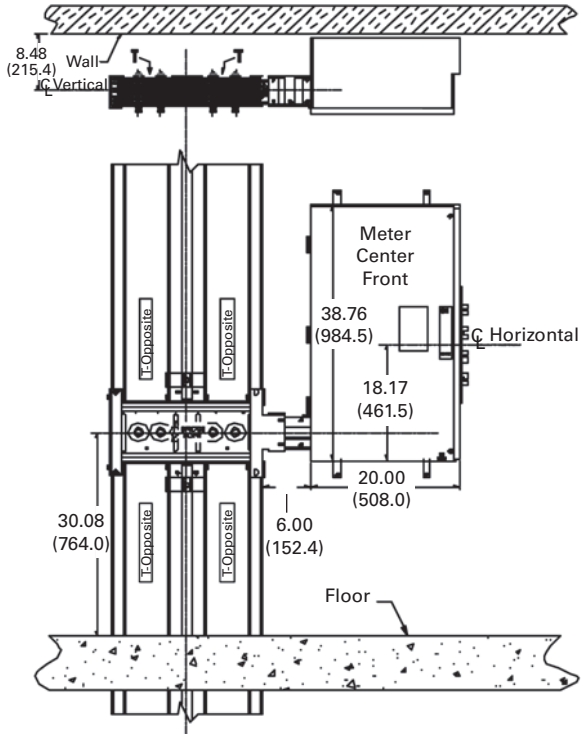

Main Circuit Breaker—"Standard T" Phasing Left

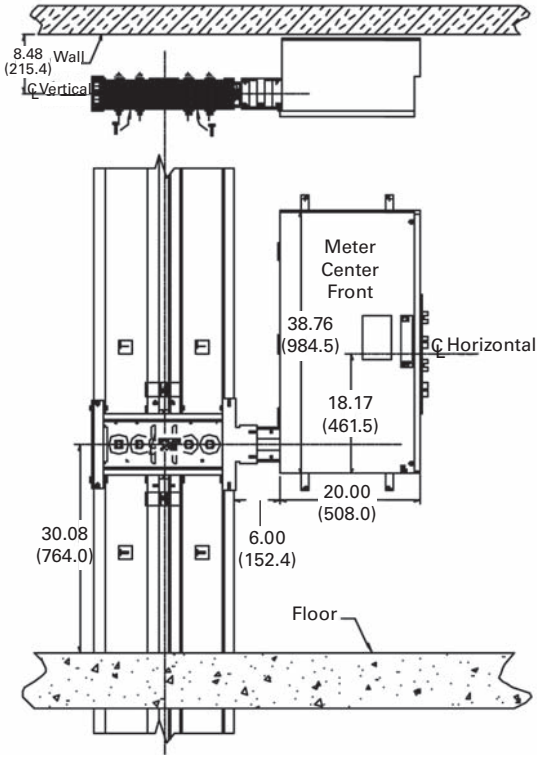

Surge Metering

Surge suppression devices shown are factory mounted in Group Metering Enclosure.

Contents

Description	*Page*
Systems for Residential and Commercial Applications	**V1-T4-88**
Meter Packs	**V1-T4-90**
Type CCV 120/240 V Tenant Main Circuit Breaker	**V1-T4-95**
Type CV 120/240 V Tenant Main Circuit Breaker	**V1-T4-96**
Meter Packs—1MP, 1MM and 3MM Main Tenant Circuit Breakers	**V1-T4-98**
Main Service Modules	**V1-T4-101**
Surge Metering	
Group Metering Inline Current Transformer Cabinets	**V1-T4-116**
Residential Meter Stacks	**V1-T4-118**
1MP, 1MM and 3MM Main Tenant Circuit Breakers	**V1-T4-127**
Phase Balanced Stack	**V1-T4-128**
Commercial Meter Stack Modules	**V1-T4-129**
35MM, 37MM, 35SS and 37SS Main Tenant Circuit Breakers	**V1-T4-136**

4

Surge Metering

Product Description

Eaton's multiple metering product family is proud to announce the availability of main surge devices. The new main surge is mounted between the main service module and the meter stacks and serves the purpose of providing surge protection for downstream multiple metering products. The main surge is compatible with all meter stacks currently manufactured (1MM, 3MM, 35MM and 37MM).

Features, Benefits and Functions

- Uses thermally protected metal oxide varistor (MOV) technology
- Compatible with 37MM enclosure accessories
- Protection status indicator lights EMI/RFI filtering and audible alarms
- Offers surge protection for all units fed from a main service module
- Benefit for building/complex owners who want to offer surge protection to their tenants. Owner can market their apartment complex as being surge friendly to appliances and electronics
- **Attain local utility company approval. Not for use in EUSERC area**

Standards and Certifications

- UL 1449 3rd Edition recognized component

UL Listed

Product Selection

Surge Metering

Voltage	Surge Current per Phase (kA)	Diagnostics	Catalog Number
120/240 V single-phase	100	Standard	**1MMSURGE**
208Y/120 V three-phase	100	Standard	**3MMSURGE**

Contents

Description	*Page*
Systems for Residential and Commercial Applications	**V1-T4-88**
Meter Packs	**V1-T4-90**
Type CCV 120/240 V Tenant Main Circuit Breaker	**V1-T4-95**
Type CV 120/240 V Tenant Main Circuit Breaker	**V1-T4-96**
Meter Packs—1MP, 1MM and 3MM Main Tenant Circuit Breakers	**V1-T4-98**
Main Service Modules	**V1-T4-101**
Surge Metering	**V1-T4-115**
Group Metering Inline Current Transformer Cabinets	
Residential Meter Stacks	**V1-T4-118**
1MP, 1MM and 3MM Main Tenant Circuit Breakers	**V1-T4-127**
Phase Balanced Stack	**V1-T4-128**
Commercial Meter Stack Modules	**V1-T4-129**
35MM, 37MM, 35SS and 37SS Main Tenant Circuit Breakers	**V1-T4-136**

Group Metering Inline Current Transformer Cabinets

Product Description

Eaton's group metering inline current transformer (CT) cabinets are used when utilities require the use of current transformers to meter large services. These products are compatible with Eaton's group metering offering for both single- and three-phase applications with tenant metering requirements greater than 400 A.

Features, Benefits and Functions

- Replaces separate termination box in installation to save wall space, labor and material for the contractor
- Compatible for utility-provided current transformers to be bolted in place, increasing flexibility to both the customer and utility
- Padlockable hinged doors restrict access to fuses or current transformers to ensure safety and security
- Available for pullout or fusible switch disconnect to accommodate the user's preference
- Offered in three-phase in/three-phase out, three-phase in / single-phase out, and single-phase in/single-phase out to complete a full product line offering

Product Selection

Group Metering Inline Current Transformer Cabinets

Ampere Rating	Pullout or Switch	Phase	Catalog Number
400	2 Pullouts	Single-phase in / single-phase out	**CTAP3244NCM8CH11**
400	2 Pullouts	Three-phase in / single-phase out	**CTAP3244NCM8CH31**
400	1 Pullout	Single-phase in / single-phase out	**CTAP325NCM8CH11**
400	1 Pullout	Three-phase in / single-phase out	**CTAP325NCM8CH31**
400	2 Pullouts	Three-phase in / three-phase out	**CTAP4244NCM8CH**
400	1 Pullout	Three-phase in / three-phase out	**CTAP425NCM8CH**
400	Switch	Single-phase in / single-phase out	**CTAT325NCM8CH11**
400	Switch	Three-phase in / single-phase out	**CTAT325NCM8CH31**
600	Switch	Single-phase in / single-phase out	**CTAT326NCM8CH11**
600	Switch	Three-phase in / single-phase out	**CTAT326NCM8CH31**
800	Switch	Single-phase in / single-phase out	**CTAT327NCM8CH11**
800	Switch	Three-phase in / single-phase out	**CTAT327NCM8CH31**
400	Switch	Three-phase in / three-phase out	**CTAT425NCM8CH**
600	Switch	Three-phase in / three-phase out	**CTAT426NCM8CH**
800	Switch	Three-phase in / three-phase out	**CTAT427NCM8CH**

Accessories

Group Metering Inline Current Transformer Cabinets

Description	Catalog Number
Wire harness (6 ft) per COMED requirements	**9659**
400 A C/T link and support assembly	**CTL054550**
600 A C/T link and support assembly	**CTL054552**
800 A C/T link and support assembly	**CTL054554**

Dimensions

Approximate Dimensions in Inches (mm)

Group Metering Inline Current Transformer Cabinets

Height	Width	Depth
64.00 (1625.6)	26.50 (673.1)	15.00 (381.0)

1MM and 3MM Metering Stack Modules

Contents

Description	*Page*
Systems for Residential and Commercial Applications	**V1-T4-88**
Meter Packs	**V1-T4-90**
Type CCV 120/240 V Tenant Main Circuit Breaker	**V1-T4-95**
Type CV 120/240 V Tenant Main Circuit Breaker	**V1-T4-96**
Meter Packs—1MP, 1MM and 3MM Main Tenant Circuit Breakers	**V1-T4-98**
Main Service Modules	**V1-T4-101**
Surge Metering	**V1-T4-115**
Group Metering Inline Current Transformer Cabinets	**V1-T4-116**
Residential Meter Stacks	
1MP, 1MM and 3MM Main Tenant Circuit Breakers	**V1-T4-127**
Phase Balanced Stack	**V1-T4-128**
Commercial Meter Stack Modules	**V1-T4-129**
35MM, 37MM, 35SS and 37SS Main Tenant Circuit Breakers	**V1-T4-136**

Residential Meter Stacks

Features, Benefits and Functions

A. Barrier
Meter socket and tenant main breaker/wireway sections are separated by a solid metal barrier to guard unmetered bus against power theft.

B. Tenant Breaker
Reliable busbar–to–busbar connection. 200 A modules accept bolt-on breakers 60–200 A. 125 A modules accept 15–125 A plug-on breakers.

C. Moveable Phase Connector
Four-wire horizontal bus lets you use any 3MM module for single- or three-phase incoming service. Shipped with A and B phase connection, phase balancing is easily accomplished in the field by moving one, front-accessible phase connector post per module.

D. Neutral Assembly
A convenient termination for neutral conductors is in the wireway of each module.

E. Enclosed Horizontal Bus
Added security because a non-removable barrier encloses the 800 or 1200 A horizontal bus passing through tenant breaker section.

F. Equipment Ground Bar
Factory installed in side gutter, a standard feature that's moveable to the top or bottom gutter.

G. Raintight Cap
Shipped on each outdoor meter module and main device.

H. Knockouts
Tangential in bottom endwall.

I. Superior Finish
Rust inhibiting phosphate primer and gray baked enamel is standard. All outdoor enclosures are of galvanized steel construction.

J. Meter Socket
Our unique meter socket base is installed without any fasteners—reducing chances for hot spots, easily replaceable, and improves connection to vertical bus.

K. Bus Connection
Mains and modules slip together quickly and smoothly with front-accessible captive bolts securing the juncture without removing socket interiors or bus access plate. Main bus joint bolts torque to 25 foot pounds.

L. Separate Wireway Cover
Separate covers allow easy access to tenant breaker and wireway section, permit work on breakers or in wireway without disturbing meters or meter covers. (Not shown.)

M. Vertical Busbar
One-piece vertical busbar from phase balancing joints to meter socket eliminating any chance for hot spots.

1MM Meter Stack Module

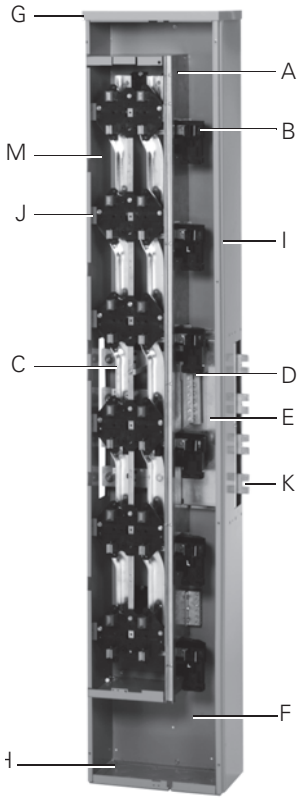

- Eaton's 1MM stacks are single-phase in, single-phase out design
- Eaton's 3MM stacks are three-phase in, single-phase out design
- Stacks with single-phase horizontal bus are rated 240/120 V, single-phase, three-wire. Stacks with three-phase horizontal bus are rated 208Y/120 V, three-phase, four-wire, but can be used on 240/120 V, three-phase, four-wire delta systems
- All three-phase horizontal bus modules have four-wire cross bus, connected A-B phase to vertical bus, readily reconnectable for phase balance on installation

Note: Individual sockets cannot be phase balanced, only each stack.

- Short-circuit ratings up to 100,000 A rms symmetrical depending upon AIC rating of installed main tenant circuit breakers and main device
- Main tenant feeders can exit bottom or back. Knockouts are available at all exit locations
- If being used in outdoor application and exiting the top, mount Myer type hubs on rainproof cap
- Provision for two-pole breaker (plug-on type for 125 A sockets and bolt-on type for 200 A sockets)—circuit breakers not included
- Mechanically and electrically built to bolt-up with main service modules and commercial modular metering stacks
- Aluminum or copper bus
- 800 or 1200 A horizontal bus
- All 3MM stacks include fifth jaw at 9 o'clock position
- All 1MM stacks do not include fifth jaw. Order 1MM5JK if needed

Catalog Number Selection

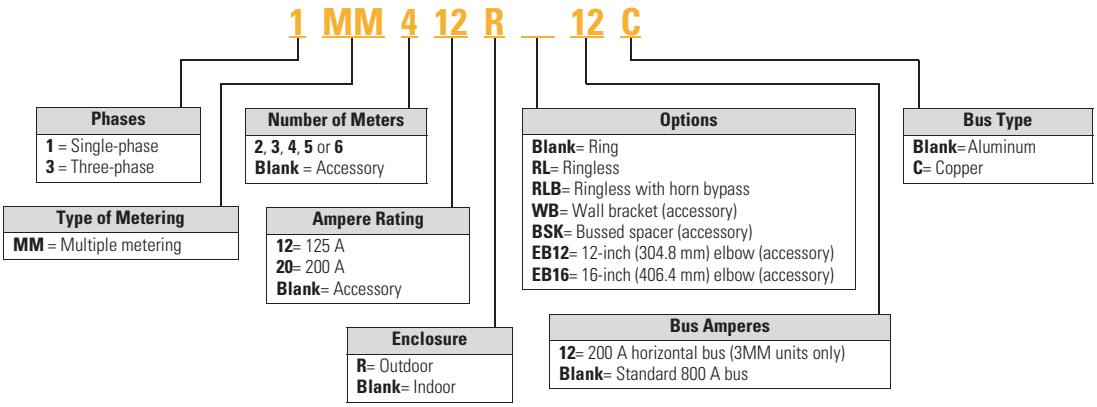

When Ordering:

1. Determine catalog number of Main Service Module.
2. Determine catalog number of Meter Stack (Residential or Commercial).
3. Find quantity and catalog numbers for tenant circuit breakers (found on **Page V1-T4-127** or **V1-T4-137**). Order one breaker per socket.
4. If any accessories are needed, order from **Pages V1-T4-138** and **V1-T4-139**.

Product Selection

1MM and 3MM Metering Stack Modules

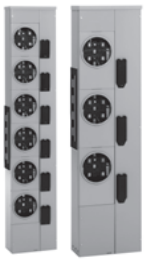

800 A Horizontal Aluminum Bus—Standard Offering

Amperes Per Meter Socket	Number of Meter Sockets	Bus Ampacity	Enclosure Type ①	Main Tenant Breaker Type (For Specific Catalog Numbers, Refer to Page V1-T4-127)	Single-Phase In, Single-Phase Out Single-Phase Horizontal Bus (Three Horizontal Busbars—A, B and Neutral) ② Catalog Number	Three-Phase In, Single-Phase Out Three-Phase Horizontal Bus (Four Horizontal Busbars—A, B, C and Neutral) Catalog Number
Ring Style Meter Socket Covers ③						
125 ④	2 ⑤	800	Indoor/outdoor	Plug-on type BR2_ BRH2_ BRHH2_ BRX2_	Use three-phase	**3MM212R**
	3 ⑤	800	Indoor/outdoor		**1MM312R**	**3MM312R**
	4	800	Indoor/outdoor		**1MM412R**	**3MM412R**
	5	800	Indoor/outdoor		**1MM512R**	**3MM512R**
	6	800	Indoor/outdoor		**1MM612R**	**3MM612R**
200 ⑥	2	800	Outdoor	Bolt-on type CCV2_X CCVH2_X CVS2_XMM CV2_XMM CVH2_XMM	Use three-phase	**3MM220R**
	3	800	Outdoor		**1MM320R**	**3MM320R**
	4	800	Outdoor		**1MM420R**	**3MM420R**
	5	800	Outdoor		**1MM520R** ⑦	**3MM520R** ⑥
Ringless Style Meter Socket Covers						
125	2	800	Outdoor	Plug-on type BR2_ BRH2_ BRHH2_ BRX2_	Use three-phase	**3MM212RRL**
	3	800	Outdoor		**1MM312RRL**	**3MM312RRL**
	4	800	Outdoor		**1MM412RRL**	**3MM412RRL**
	5	800	Outdoor		**1MM512RRL**	**3MM512RRL**
	6	800	Outdoor		**1MM612RRL**	**3MM612RRL**
200	2	800	Outdoor	Bolt-on type CCV2_X CCVH2_X CVS2_XMM CV2_XMM CVH2_XMM	Use three-phase	**3MM220RRL**
	3	800	Outdoor		**1MM320RRL**	**3MM320RRL**
	4	800	Outdoor		**1MM420RRL**	**3MM420RRL**
	5	800	Outdoor		**1MM520RRL** ⑦	**3MM520RRL** ⑥
Ringless Style Covers with Horn Bypass						
125	2	800	Outdoor	Plug-on type BR2_ BRH2_ BRHH2_ BRX2_	Use three-phase	**3MM212RRLB**
	3	800	Outdoor		**1MM312RRLB**	**3MM312RRLB**
	4	800	Outdoor		**1MM412RRLB**	**3MM412RRLB**
	5	800	Outdoor		**1MM512RRLB**	**3MM512RRLB**
	6	800	Outdoor		**1MM612RRLB**	**3MM612RRLB**
200	2	800	Outdoor	Bolt-on type CCV2_X CCVH2_X CVS2_XMM CV2_XMM CVH2_XMM	Use three-phase	**3MM220RRLB**
	3	800	Outdoor		**1MM320RRLB**	**3MM320RRLB**
	4	800	Outdoor		**1MM420RRLB**	**3MM420RRLB**
	5	800	Outdoor		**1MM520RRLB** ⑦	**3MM520RRLB** ⑥

Notes

① For indoor applications where a top endwall with knockouts is needed, order one of part number **MM12N1WLK** for each 125 A stack or **MM20N1WLK** for each 200 A stack.
② 1MM units do not come with 5th jaw.
③ Reference drawing EUSERC DWG-G1, G2, G3.
④ To change in field from ring to ringless—order **1MMRC125**.
⑤ To change in field from ring to ringless, the top socket in 125 A, two- and three-high stacks use **1MMRC125T**. Top socket only—other sockets see ④.
⑥ To change in field from ring to ringless—order **1MMRC200**.
⑦ Check with local utility for height requirements or restrictions.

1MM and 3MM Metering Stack Modules

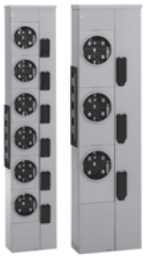

800 A Horizontal Copper Bus—Premium Offering

Amperes Per Meter Socket	Number of Meter Sockets	Bus Ampacity	Enclosure Type ①	Main Tenant Breaker Type (For Specific Catalog Numbers, Refer to Page V1-T4-127)	Single-Phase In, Single-Phase Out Single-Phase Horizontal Bus (Three Horizontal Busbars—A, B, C and Neutral) ② Catalog Number	Three-Phase In, Single-Phase Out Three-Phase Horizontal Bus (Four Horizontal Busbars—A, B, C and Neutral) Catalog Number
Ring Style Meter Socket Covers ③						
125 ④	2 ⑤	800	Outdoor	Plug-on type BR2_ BRH2_ BRHH2_ BRX2_	Use three-phase	**3MM212RC**
	3 ⑤	800	Outdoor		**1MM312RC**	**3MM312RC**
	4	800	Outdoor		**1MM412RC**	**3MM412RC**
	5	800	Outdoor		**1MM512RC**	**3MM512RC**
	6	800	Outdoor		**1MM612RC**	**3MM612RC**
200 ⑥	2	800	Outdoor	Bolt-on type CCV2_X CCVH2_X CVS2_XMM CV2_XMM CVH2_XMM	Use three-phase	**3MM220RC**
	3	800	Outdoor		**1MM320RC**	**3MM320RC**
	4	800	Outdoor		**1MM420RC**	**3MM420RC**
	5	800	Outdoor		**1MM520RC** ⑦	**3MM520RC** ⑥
Ringless Style Meter Socket Covers						
125	2	800	Outdoor	Plug-on type BR2_ BRH2_ BRHH2_ BRX2_	Use three-phase	**3MM212RRLC**
	3	800	Outdoor		**1MM312RRLC**	**3MM312RRLC**
	4	800	Outdoor		**1MM412RRLC**	**3MM412RRLC**
	5	800	Outdoor		**1MM512RRLC**	**3MM512RRLC**
	6	800	Outdoor		**1MM612RRLC**	**3MM612RRLC**
200	2	800	Outdoor	Bolt-on type CCV2_X CCVH2_X CVS2_XMM CV2_XMM CVH2_XMM	Use three-phase	**3MM220RRLC**
	3	800	Outdoor		**1MM320RRLC**	**3MM320RRLC**
	4	800	Outdoor		**1MM420RRLC**	**3MM420RRLC**
	5	800	Outdoor		**1MM520RRLC** ⑦	**3MM520RRLC** ⑥
Ringless Style Covers with Horn Bypass						
125	2	800	Outdoor	Plug-on type BR2_ BRH2_ BRHH2_ BRX2_	Use three-phase	**3MM212RRLBC**
	3	800	Outdoor		**1MM312RRLBC**	**3MM312RRLBC**
	4	800	Outdoor		**1MM412RRLBC**	**3MM412RRLBC**
	5	800	Outdoor		**1MM512RRLBC**	**3MM512RRLBC**
	6	800	Outdoor		**1MM612RRLBC**	**3MM612RRLBC**
200	2	800	Outdoor	Bolt-on type CCV2_X CCVH2_X CVS2_XMM CV2_XMM CVH2_XMM	Use three-phase	**3MM220RRLBC**
	3	800	Outdoor		**1MM320RRLBC**	**3MM320RRLBC**
	4	800	Outdoor		**1MM420RRLBC**	**3MM420RRLBC**
	5	800	Outdoor		**1MM520RRLBC** ⑦	**3MM520RRLBC** ⑥

Notes

① For indoor applications where a top endwall with knockouts is needed, order (1) of part number **MM12N1WLK** for each 125 A stack or **MM20N1WLK** for each 200 A stack.
② 1MM units do not come with 5th jaw.
③ Reference drawing EUSERC DWG-G1, G2, G3.
④ To change in field from ring to ringless—order **1MMRC125**.
⑤ To change in field from ring to ringless, the top socket in 125 A, two- and three-high stacks use **1MMRC125T**. Top socket only—other sockets see ④.
⑥ To change in field from ring to ringless—order **1MMRC200**.
⑦ Check with local utility for height requirements or restrictions.

1MM and 3MM Metering Stack Modules

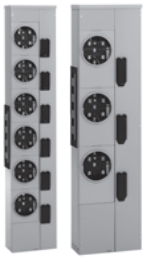

1200 A Horizontal Aluminum Bus—Standard Offering

Amperes Per Meter Socket	Number of Meter Sockets	Bus Ampacity	Enclosure Type ①	Main Tenant Breaker Type (For Specific Catalog Numbers, Refer to Page V1-T4-118)	Three-Phase In, Single-Phase Out Three-Phase Horizontal Bus (Four Horizontal Busbars—A, B, C and Neutral) Catalog Number
Ring Style Meter Socket Covers ②					
125 ③	2 ④	1200	Indoor/outdoor	Plug-on type BR2_ BRH2_ BRHH2_ BRX2_	**3MM212R12**
	3 ④	1200	Indoor/outdoor		**3MM312R12**
	4	1200	Indoor/outdoor		**3MM412R12**
	5	1200	Indoor/outdoor		**3MM512R12**
	6	1200	Indoor/outdoor		**3MM612R12**
200 ⑤	2	1200	Outdoor	Bolt-on type CCV2_X CCVH2_X CVS2_XMM CV2_XMM CVH2_XMM	**3MM220R12**
	3	1200	Outdoor		**3MM320R12**
	4	1200	Outdoor		**3MM420R12**
	5	1200	Indoor/outdoor		**3MM520R12**
Ringless Style Meter Socket Covers (5th Jaw at 9 o'Clock Standard—Field Adjustable to 3 or 6 o'Clock)					
125	2	1200	Outdoor	Plug-on type BR2_ BRH2_ BRHH2_ BRX2_	**3MM212R12RL**
	3	1200	Outdoor		**3MM312R12RL**
	4	1200	Outdoor		**3MM412R12RL**
	5	1200	Outdoor		**3MM512R12RL**
	6	1200	Outdoor		**3MM612R12RL**
200	2	1200	Outdoor	Bolt-on type CCV2_X CCVH2_X CVS2_XMM CV2_XMM CVH2_XMM	**3MM220R12RL**
	3	1200	Outdoor		**3MM320R12RL**
	4	1200	Outdoor		**3MM420R12RL**
	5	1200	Outdoor		**3MM520R12RL**
Ringless Style Covers with Horn Bypass (5th Jaw at 9 o'Clock Standard—Field Adjustable to 3 or 6 o'Clock)					
125	2	1200	Outdoor	Plug-on type BR2_ BRH2_ BRHH2_ BRX2_	**3MM212R12RLB**
	3	1200	Outdoor		**3MM312R12RLB**
	4	1200	Outdoor		**3MM412R12RLB**
	5	1200	Outdoor		**3MM512R12RLB**
	6	1200	Outdoor		**3MM612R12RLB**
200	2	1200	Outdoor	Bolt-on type CCV2_X CCVH2_X CVS2_XMM CV2_XMM CVH2_XMM	**3MM220R12RLB**
	3	1200	Outdoor		**3MM320R12RLB**
	4	1200	Outdoor		**3MM420R12RLB**
	5	1200	Outdoor		**3MM520R12RLB**

Notes

① 111For indoor applications where a top endwall with knockouts is needed, order (one) of part number **MM12N1WLK** for each 125 A stack or **MM20N1WLK** for each 200 A stack.

② Reference drawing EUSERC DWG-G1, G2, G3.

③ To change in field from ring to ringless—order **1MMRC125**.

④ To change in field from ring to ringless, the top socket in 125 A, two- and three-high stacks use **1MMRC125T**. Top socket only—other sockets see ③.

⑤ To change in field from ring to ringless—order **1MMRC200**.

1MM and 3MM Metering Stack Modules

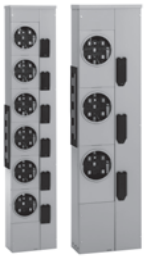

1200 A Horizontal Copper Bus—Premium Offering

Amperes Per Meter Socket	Number of Meter Sockets	Bus Ampacity	Enclosure Type ①	Main Tenant Breaker Type (For Specific Catalog Numbers, Refer to Page V1-T4-118)	Three-Phase In, Single-Phase Out Three-Phase Horizontal Bus (Four Horizontal Busbars—A, B, C and Neutral) Catalog Number
Ring Style Meter Socket Covers ②					
125 ③	2 ④	1200	Indoor/outdoor	Plug-on type BR2_ BRH2_ BRHH2_ BRX2_	**3MM212R12C**
	3 ④	1200	Indoor/outdoor		**3MM312R12C**
	4	1200	Indoor/outdoor		**3MM412R12C**
	5	1200	Indoor/outdoor		**3MM512R12C**
	6	1200	Indoor/outdoor		**3MM612R12C**
200 ⑤	2	1200	Outdoor	Bolt-on type CCV2_X CCVH2_X CVS2_XMM CV2_XMM CVH2_XMM	**3MM220R12C**
	3	1200	Outdoor		**3MM320R12C**
	4	1200	Outdoor		**3MM420R12C**
	5	1200	Outdoor		**3MM520R12C**
Ringless Style Meter Socket Covers (5th Jaw at 9 o'Clock Standard—Field Adjustable to 3 or 6 o'Clock)					
125	2	1200	Outdoor	Plug-on type BR2_ BRH2_ BRHH2_ BRX2_	**3MM212R12RLC**
	3	1200	Outdoor		**3MM312R12RLC**
	4	1200	Outdoor		**3MM412R12RLC**
	5	1200	Outdoor		**3MM512R12RLC**
	6	1200	Outdoor		**3MM612R12RLC**
200	2	1200	Outdoor	Bolt-on type CCV2_X CCVH2_X CVS2_XMM CV2_XMM CVH2_XMM	**3MM220R12RLC**
	3	1200	Outdoor		**3MM320R12RLC**
	4	1200	Outdoor		**3MM420R12RLC**
	5	1200	Outdoor		**3MM520R12RLC**
Ringless Style Covers with Horn Bypass (5th Jaw at 9 o'Clock Standard—Field Adjustable to 3 or 6 o'Clock)					
125	2	1200	Outdoor	Plug-on type BR2_ BRH2_ BRHH2_ BRX2_	**3MM212R12RLBC**
	3	1200	Outdoor		**3MM312R12RLBC**
	4	1200	Outdoor		**3MM412R12RLBC**
	5	1200	Outdoor		**3MM512R12RLBC**
	6	1200	Outdoor		**3MM612R12RLBC**
200	2	1200	Outdoor	Bolt-on type CCV2_X CCVH2_X CVS2_XMM CV2_XMM CVH2_XMM	**3MM220R12RLBC**
	3	1200	Outdoor		**3MM320R12RLBC**
	4	1200	Outdoor		**3MM420R12RLBC**
	5	1200	Outdoor		**3MM520R12RLBC**

Technical Data and Specifications

Wire Sizes—Neutral and Ground Lugs

- Each stack includes a neutral and ground bar
- If an extra ground bar is needed, order **1MMGBK**

Wire Sizes—Neutral and Ground Lugs

Lugs in Meter Socket Modules	Wire Size, Al/Cu
Branch neutral—125 A socket module	#6–2/0 kcmil
Branch neutral—200 A socket module	#1/0–300 kcmil
Equipment ground bar—125 A socket module	#14–#2 kcmil
Equipment ground bar—200 A socket module	#14–2/0 kcmil
Optional ground bar (**1MMGBK**)	#6–2/0 kcmil

Notes

① For indoor applications where a top endwall with knockouts is needed, order (one) of part number **MM12N1WLK** for each 125 A stack or **MM20N1WLK** for each 200 A stack.

② Reference drawing EUSERC DWG-G1, G2, G3.

③ To change in field from ring to ringless—order **1MMRC125**.

④ To change in field from ring to ringless, the top socket in 125 A, two- and three-high stacks use **1MMRC125T**. Top socket only—other sockets see ③.

⑤ To change in field from ring to ringless—order **1MMRC200**.

Dimensions

Approximate Dimensions in Inches (mm)

Modular Metering Stacks—Aluminum and Copper

1MM, 3MM, 125 Amperes

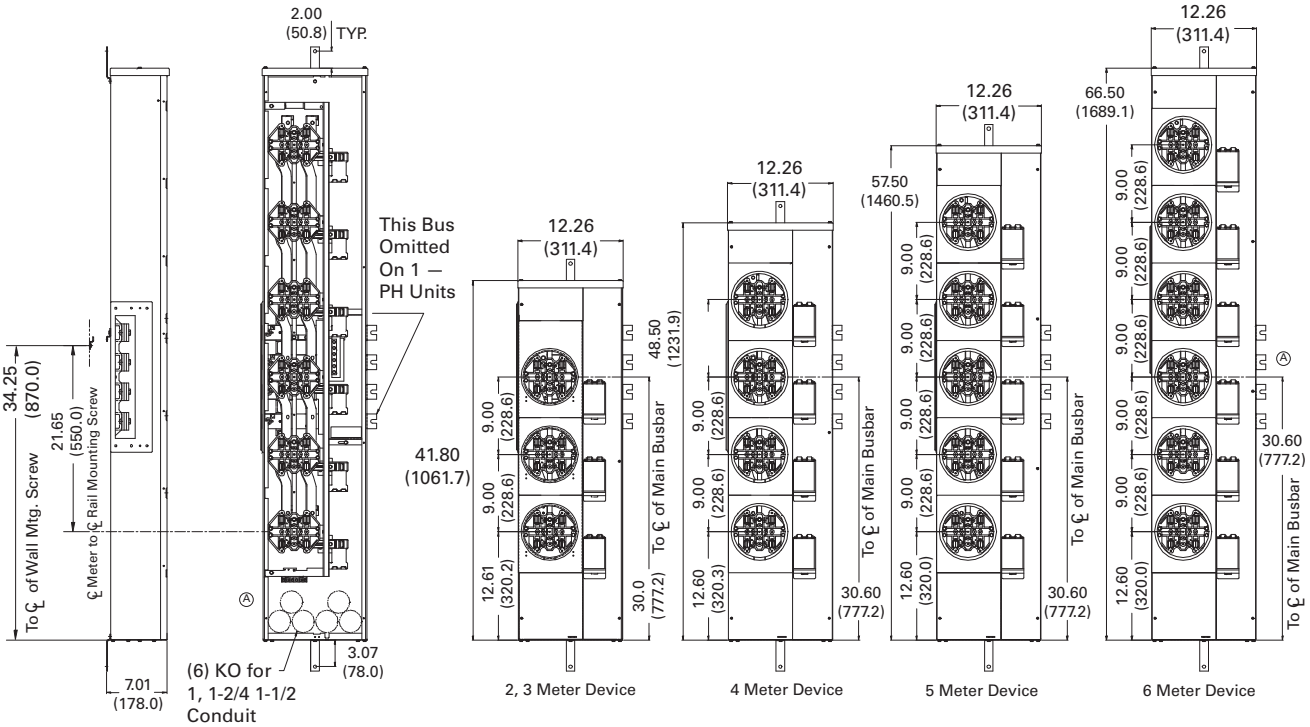

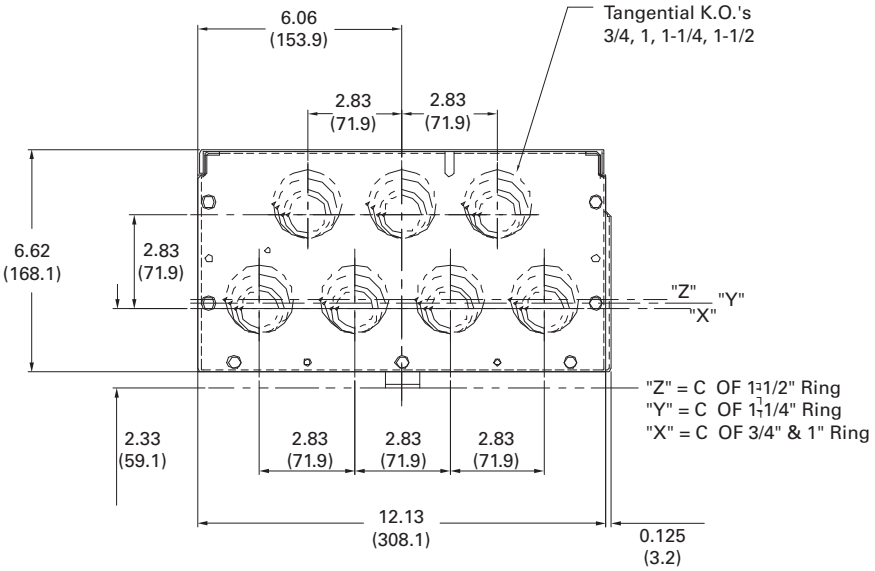

Top End & Bottom End View for NEMA 1;
Bottom End View for NEMA 3R

Note: Dimensions Apply to 800 and 1200 Ampere Horizontal Bus.

Approximate Dimensions in Inches (mm)

Modular Metering Stacks—Aluminum and Copper

1MM, 3MM, 200 Amperes

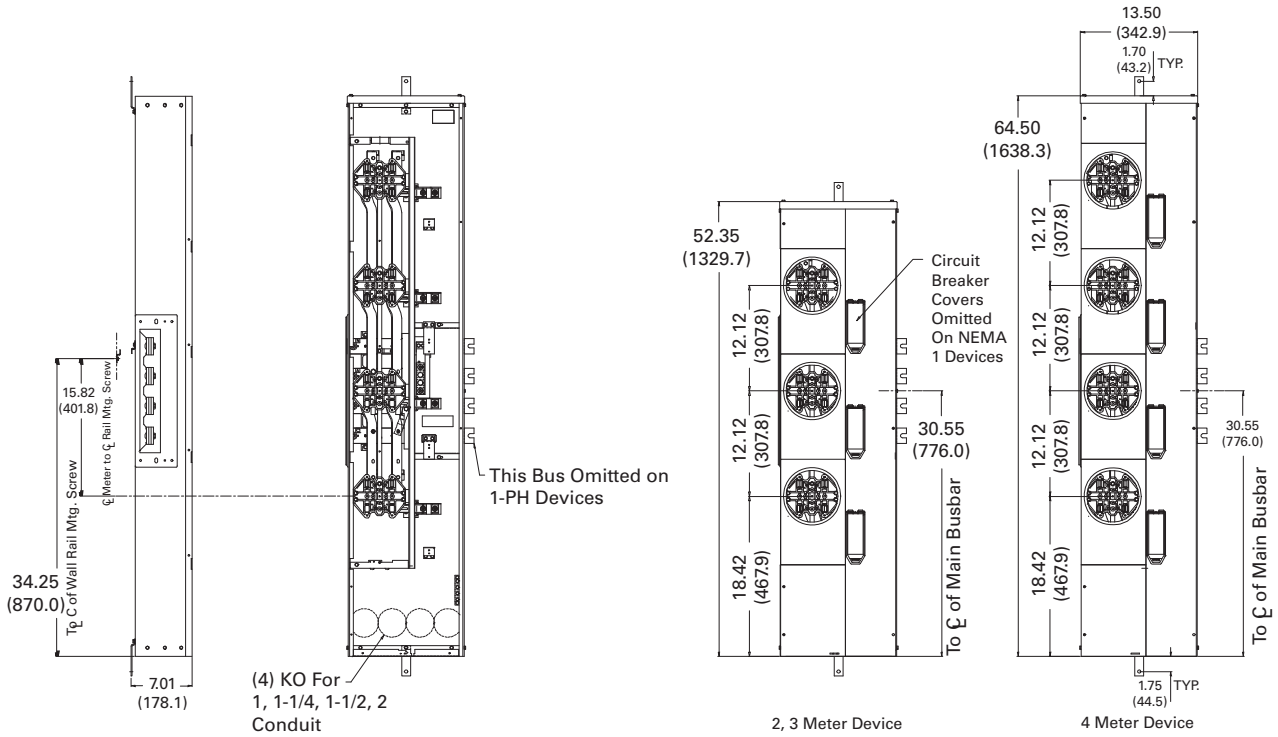

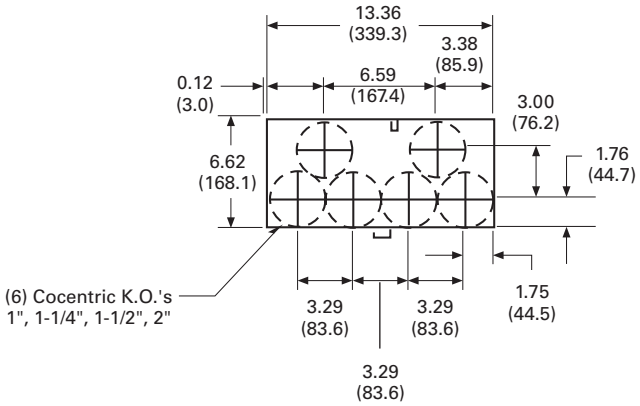

Bottom View

Note: Dimensions Apply to 800 and 1200 Ampere Horizontal Bus.

Approximate Dimensions in Inches (mm)

5-High, 200 Amperes, 1MM and 3MM Metering

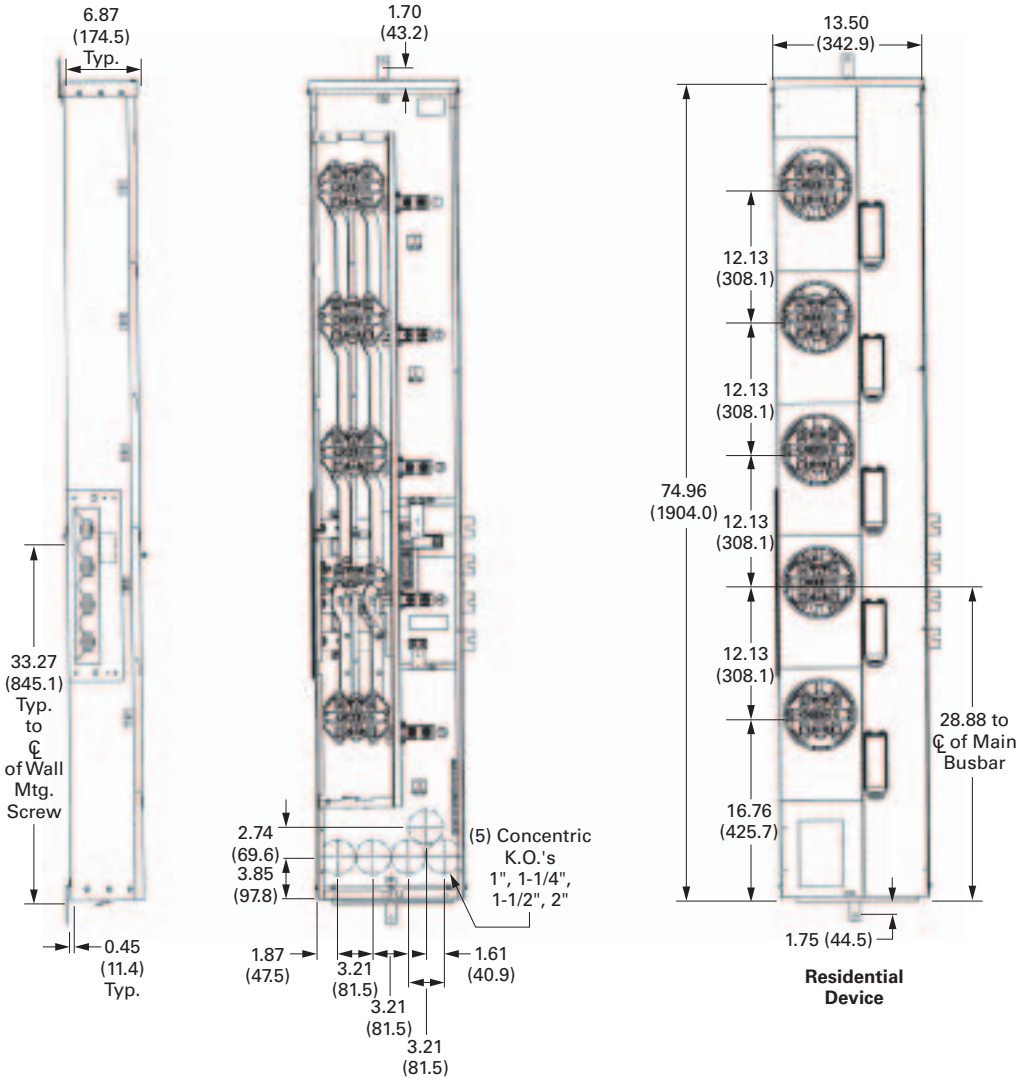

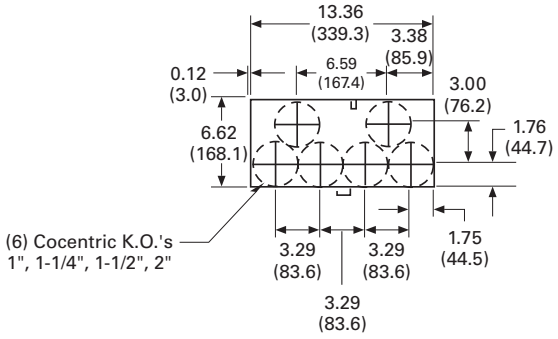

Note: The Bussed meter stack device shown on the far right of the figure, must be used on Mains with Busway connections, found on **Pages V1-T4-109** and **V1-T4-113**. Please contact factory for catalog numbers associated with Bussed meter stack devices.

1MM and 3MM Metering Circuit Breakers

CV2200

Contents

Description	*Page*
Systems for Residential and Commercial Applications	**V1-T4-88**
Meter Packs	**V1-T4-90**
Type CCV 120/240 V Tenant Main Circuit Breaker	**V1-T4-95**
Type CV 120/240 V Tenant Main Circuit Breaker	**V1-T4-96**
Meter Packs—1MP, 1MM and 3MM Main Tenant Circuit Breakers	**V1-T4-98**
Main Service Modules	**V1-T4-101**
Surge Metering	**V1-T4-115**
Group Metering Inline Current Transformer Cabinets	**V1-T4-116**
Residential Meter Stacks	**V1-T4-118**
1MP, 1MM and 3MM Main Tenant Circuit Breakers	
Phase Balanced Stack	**V1-T4-128**
Commercial Meter Stack Modules	**V1-T4-129**
35MM, 37MM, 35SS and 37SS Main Tenant Circuit Breakers	**V1-T4-136**

1MP, 1MM and 3MM Main Tenant Circuit Breakers

Product Description

Specific main tenant circuit breakers that are to be used in meter packs (1MP), residential meter stacks (1MM) and three-phase in single-phase out meter stacks (3MM).

Product Selection

Description	Number of Poles	Main Tenant Circuit Breaker Ampere Rating	10 kAIC Catalog Number ①	22 kAIC Catalog Number	25 kAIC Catalog Number ①②③④	42 kAIC Catalog Number ②③④	65 kAIC Catalog Number ②③④	100 kAIC Catalog Number ②③④
Plug-On Type								
Plug-on type circuit breakers used with 1MP, 1MM, and 3MM 125 A modular metering stacks	2	60	**BR260**	**BRH260**	—	**BRHH260**	**BRX260**	—
	2	70	**BR270**	**BRH270**	—	**BRHH270**	**BRX270**	—
	2	80	**BR280**	**BRH280**	—	**BRHH280**	**BRX280**	—
	2	90	**BR290**	**BRH290**	—	**BRHH290**	**BRX290**	—
	2	100	**BR2100**	**BRH2100**	—	**BRHH2100**	**BRX2100**	—
	2	110	**BR2110**	**BRH2110**	—	**BRHH2110**	**BRX2110**	—
	2	125	**BR2125**	**BRH2125**	—	**BRHH2125**	**BRX2125**	—
Bolt-On Type								
Bolt-on type circuit breakers used with 1MP, 1MM, and 3MM 200 A modular metering stacks	2	60	**CCV2060X**	**CCVH2060X**	**CVS2060XMM**	**CVS2060XMM**	**CV2060XMM**	**CVH2060XMM**
	2	70	**CCV2070X**	**CCVH2070X**	**CVS2070XMM**	**CVS2070XMM**	**CV2070XMM**	**CVH2070XMM**
	2	80	**CCV2080X**	**CCVH2080X**	**CVS2080XMM**	**CVS2080XMM**	**CV2080XMM**	**CVH2080XMM**
	2	90	**CCV2090X**	**CCVH2090X**	**CVS2090XMM**	**CVS2090XMM**	**CV2090XMM**	**CVH2090XMM**
	2	100	**CCV2100X**	—	**CCVH2100X**	**CVS2100XMM**	**CV2100XMM**	**CVH2100XMM**
	2	125	**CCV2125X**	—	**CCVH2125X**	**CVS2125XMM**	**CV2125XMM**	**CVH2125XMM**
	2	150	**CCV2150X**	—	**CCVH2150X**	**CVS2150XMM**	**CV2150XMM**	**CVH2150XMM**
	2	175	**CCV2175X**	—	**CCVH2175X**	**CVS2175XMM**	**CV2175XMM**	**CVH2175XMM**
	2	200	**CCV2200X**	—	**CCVH2200X**	**CVS2200XMM**	**CV2200XMM**	**CVH2200XMM**

Notes

① #2–300 kcmil wire size range for CCV and CCVH tenant main circuit breakers.
② "MM" suffix indicates mounting hardware kit is included as standard with tenant main breaker.
③ 1MMCBK replacement mounting hardware kit. One kit is needed per breaker. Mounting hardware kit ships standard with breaker "MM" suffix offering.
④ #6–4/0 kcmil wire size range for CVS, CV and CVH tenant main circuit breakers. If #2–300 kcmil is needed, order 2TA225CVK. One kit needed per breaker.

Contents

Description	*Page*
Systems for Residential and Commercial Applications	**V1-T4-88**
Meter Packs	**V1-T4-90**
Type CCV 120/240 V Tenant Main Circuit Breaker	**V1-T4-95**
Type CV 120/240 V Tenant Main Circuit Breaker	**V1-T4-96**
Meter Packs—1MP, 1MM and 3MM Main Tenant Circuit Breakers	**V1-T4-98**
Main Service Modules	**V1-T4-101**
Surge Metering	**V1-T4-115**
Group Metering Inline Current Transformer Cabinets	**V1-T4-116**
Residential Meter Stacks	**V1-T4-118**
1MP, 1MM and 3MM Main Tenant Circuit Breakers	**V1-T4-127**
Phase Balanced Stack Commercial Meter Stack Modules	**V1-T4-129**
35MM, 37MM, 35SS and 37SS Main Tenant Circuit Breakers	**V1-T4-136**

Phase Balanced Stack

Product Description

Eaton's Phase Balanced Stack allows for a complete phase balanced metering line-up using fewer stacks. With today's electrical rooms becoming smaller, the need is greater than ever to offer space-saving metering products while providing a fully phase balanced system. The new phase balanced stack is the answer.

Today, achieving a phase balanced system when connected to a 208Y/120 Vac three-phase, four-wire system may require one or two additional 3MM meter modules. Standard 3MM meter stacks come factory connected to phases A and B. The new phase balanced stacks connect the two bottom meters to phases B and C and the top two or three meters to phases A and C. Using these new stacks with the AB phased 3MM metering, phase balancing is accomplished, and more compact than before.

Features

- Available in four- and five-high configurations at 125 A
- 200 A stacks available
- Available with 800 A aluminum bus and 1200 A copper bus
- Ring, ringless, ringless with horn bypass available
- Outdoor enclosure
- Dimensions same as existing 125 A, three-phase meter stacks

Product Selection

Ordering Information

- Check with local utility for height restrictions
- Items loaded in VISTA
- If you have questions, please contact the Technical Resource Center 1-800-356-1243, option 3

Phase Balanced Stack

Amperes Per Meter Socket	Bus Ampacity	Meter Socket Cover	Catalog Number
125	800	Ring	**3MM412RACBC**
125	800	Ring	**3MM512RACBC**
125	800	Ringless	**3MM412RRLACBC**
125	800	Ringless	**3MM512RRLACBC**
125	800	Ringless horn bypass	**3MM412RRLBACBC**
125	800	Ringless horn bypass	**3MM512RRLBACBC**
125	1200	Ring	**3MM412R2ACBC**
125	1200	Ring	**3MM512R2ACBC**
125	1200	Ringless	**3MM412R2RLACBC**
125	1200	Ringless	**3MM512R2RLACBC**
125	1200	Ringless horn bypass	**3MM412R2RLBACBC**
125	1200	Ringless horn bypass	**3MM512R2RLBACBC**

Note: Local codes and utility requirements still apply. The phase balance stacks are not suitable for changing in the field.

Commercial Meter Stack Modules (35MM, 37MM, 35SS and 37SS)

35MM, 37MM, 35SS and 37SS

Contents

Description	*Page*
Systems for Residential and Commercial Applications	**V1-T4-88**
Meter Packs	**V1-T4-90**
Type CCV 120/240 V Tenant Main Circuit Breaker	**V1-T4-95**
Type CV 120/240 V Tenant Main Circuit Breaker	**V1-T4-96**
Meter Packs—1MP, 1MM and 3MM Main Tenant Circuit Breakers	**V1-T4-98**
Main Service Modules	**V1-T4-101**
Surge Metering	**V1-T4-115**
Group Metering Inline Current Transformer Cabinets	**V1-T4-116**
Residential Meter Stacks	**V1-T4-118**
1MP, 1MM and 3MM Main Tenant Circuit Breakers	**V1-T4-127**
Phase Balanced Stack	**V1-T4-128**
Commercial Meter Stack Modules 35MM, 37MM, 35SS and 37SS Main Tenant Circuit Breakers	**V1-T4-136**

Commercial Meter Stack Modules

Product Description

- Heavy-duty lever bypass socket design
- Single-phase or three-phase designs (35 = single-phase, 37 = three-phase)
- Provision for two-pole or three-pole main tenant breakers
- Phase balance kits are included with three-high and four-high modules

Features, Benefits and Functions

A. End Walls

The top cap is removable and does not contain knockouts, so contractors can position and punch holes where they need them. There are numerous KOs in the back and bottom for flexibility.

B. Ground Bars

The factory-installed equipment ground bars are provided in both the top and bottom gutters.

C. Meter Socket

The 5-jaw meter socket and 7-jaw meter socket includes a built-in manual bypass and jaw release. The ground wire is factory connected in both 35MM and 37MM modules.

D. Separate Wireway Cover

If work on the breakers or cables is necessary, it can be accomplished without disturbing the meters or meter covers, thanks to a separate cover that allows easy access to the module's main tenant breaker and wireway section. (Not shown.)

E. Barrier

A solid metal barrier separates the meter socket section from the tenant breaker in the wireway section. The unmetered vertical bus is enclosed to guard against power theft.

F. Neutral Assembly

Located in the wireway of each module, the assembly permits convenient termination of the neutral conductors.

G. Enclosed Horizontal Bus

Non-removable metal barrier encloses 1200 A horizontal bus when passing through the tenant breaker section for added security.

H. Tenant Breaker Range

All modules accept 15–225 A bolt-on breakers in various AIC ratings. The CHH_X breaker carries a UL listed series rating of 100,000 A, which allows you to use standard 10 kAIC breakers in downstream loadcenters and panelboards by Eaton.

I. Indoor/Outdoor Construction

Raintight caps, meter covers and lockable raintight tenant breaker covers make it convenient for you to use any of our modules on either NEMA 1 or NEMA 3R applications.

J. Mounting Rail

Rear mounting rail and wall hanger speed and simplify installation. (Mounting rail not shown.)

K. Nameplate and Ratings

The nameplate gives you full rating data: 208Y/120, three-phase, four-wire; 240/120, three-phase, four-wire delta (high leg on B-phase); and 240/120 single-phase. (Not shown.)

L. Mains and Modules

Slip together quickly, smoothly with front-accessible captive bolts securing the juncture without removing socket interiors or bus access plate. Main bus joint bolts torque to 25 foot pounds.

37MM Meter Stack Module

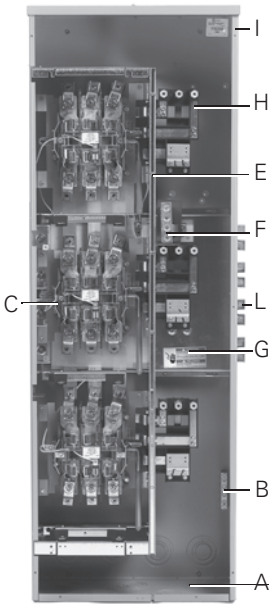

- Eaton's 35MM and 37MM modular metering stacks contain meter sockets with built-in manual bypass and jaw release (Non-EUSERC areas)
- Eaton's 35SS and 37SS stacks use meter sockets with test bypass feature (meets EUSERC electrical requirements)
- All commercial modular metering stacks contain four horizontal cross buses
- Mechanically and electrically built to bolt-up with main service modules and residential modular metering stacks

Catalog Number Selection

Commercial Meter Stack Modules

3 7 MM 1 40 R 12 40 K C

Phases
Three-phase only

Number of Jaws
5 or **7**

Type of Metering
MM = Commercial metering module
SS = Safety socket—EUSERC

Number of Meters
1, **2**, **3** or **4**

Socket Amperage
20 = 200 A
40 = 400 A

Enclosure
R = NEMA 3R

Bus
12 = 1200 A main bus ampacity
AB = Phases A&B—EUSERC
AC = Phases A&C—EUSERC
BC = Phases B&C—EUSERC

Tenant Breakers
40 = 400 A included
Blank = Ordered separately

Socket Type
K = K Base bolt-on socket
Blank = Plug-in type socket

Bus
C = Copper
Blank = Aluminum

When Ordering:

1. Determine catalog number of Main Service Module.
2. Determine catalog number of Meter Stack (Residential or Commercial).
3. Find quantity and catalog numbers for tenant circuit breakers (found on **Page V1-T4-136**). Order one breaker per socket.
4. If any accessories are needed, order from **Pages V1-T4-138** and **V1-T4-139**.

Product Selection

35MM

- Each socket is a 5 terminal block with lever bypass and jaw release
- Ringless covers
- Provision for two-pole main tenant breakers (circuit breakers not included). For circuit breaker catalog numbers, refer to **Page V1-T4-136**
- Phase balancing kits are included with three-high and four-high modules. Each individual socket can be phase balanced in the field to the desired lines (A-B, B-C or A-C). Comes from factory as A-B
- Indoor/outdoor construction
- Main tenant feeders can exit top, bottom or back
- If being used in outdoor application and exiting the top, mount Myer type hubs on rainproof cap
- Short-circuit ratings up to 100 A rms symmetrical depending upon the kAIC rating of installed main tenant circuit breakers and main device
- Non-EUSERC areas

35MM—Single-Phase Commercial Meter Stack Modules (Three-Phase In, Single-Phase Out)

System Voltage	Ampere Rating Per Meter Socket	Number of Meter Sockets	Horizontal Bus Ampacity/ Material	Number of Jaws Per Meter Socket	Main Tenant Breaker Type (Page V1-T4-136) ①	Catalog Number
120/240 V, single-phase, three-wire systems and 208Y/120 V network metering (Not suitable for use on three-phase, four-wire delta systems)	225	1	1200 Al	5	Bolt-on type EHD2_ CCV2_X CCVH2_X CVS2_XMM CV2_XMM CVH2_XMM	**35MM120R12**
		1	1200 Cu	5		**35MM120R12C**
		2	1200 Al	5		**35MM220R12**
		2	1200 Cu	5		**35MM220R12C**
		3	1200 Al	5		**35MM320R12**
		3	1200 Cu	5		**35MM320R12C**
		4	1200 Al	5		**35MM420R12**
		4	1200 Cu	5		**35MM420R12C**
	400	1	1200 Al	5	400 A K-Frame included	**35MM140R1240** ②
		1	1200 Cu	5		**35MM140R1240C** ②
	400	1	1200 Al	5	400 A K-Frame included	**35MM140HR1240** ③
		1	1200 Cu	5		**35MM140HR1240C** ③
	400	2	1200 Al	5	400 A K-Frame included	**35MM240R1240**
		2	1200 Cu	5		**35MM240R1240C**
	400 continuous	1	1200 Cu	5	400 A L-Frame included	**35MM140R1240K**
	400 continuous	1	1200 Cu	5	400 A L-Frame included	**35MM140HR1240KC** ④

Notes

① Retrofit tenant circuit breaker mounting kit (**37MMRCBK**) for installation of Type EHD and CV breakers. Needed only for stacks manufactured prior to February 2013. Order one kit per breaker.
② Unit is bottom exit only.
③ Rated at 100 kAIC.
④ Rated at 35 kAIC.

37MM

- Each socket is a 7 terminal block with lever bypass and jaw release
- Ringless covers
- Provision for three-pole main tenant breakers (circuit breakers not included). For circuit breaker catalog numbers, refer to **Page V1-T4-136**
- Indoor/outdoor construction
- Main tenant breakers can exit top, bottom or back
- If being used in outdoor application and exiting the top, mount Myer type hubs on rainproof cap
- Short-circuit ratings up to 100 A rms symmetrical depending upon the kAIC rating of installed main tenant circuit breakers and main device
- Non-EUSERC areas

37MM—Three-Phase Commercial Meter Stack Modules (Three-Phase In, Three-Phase Out)

System Voltage	Ampere Rating Per Meter Socket	Number of Meter Sockets	Horizontal Bus Ampacity/ Material	Number of Jaws Per Meter Socket ①	Main Tenant Breaker Type ② (Page V1-T4-136)	Catalog Number
208Y/120 V, three-phase, four-wire 240/120 V, three-phase, four-wire delta (B-phase is high leg)	225	1	1200 Al	7	Bolt-on type EHD3_ CC3_X CVS3_X CV3_X CVH3_X	**37MM120R12**
		1	1200 Cu	7		**37MM120R12C**
		2	1200 Al	7		**37MM220R12**
		2	1200 Cu	7		**37MM220R12C**
		3	1200 Al	7		**37MM320R12**
		3	1200 Cu	7		**37MM320R12C**
		4	1200 Al	7		**37MM420R12**
		4	1200 Cu	7		**37MM420R12C**
	400	1	1200 Al	7	Bolt-on type EHD3_ CC3_X CVS3_X CV3_X CVH3_X	**37MM140R12** ③
		1	1200 Cu	7		**37MM140R12C** ③
	400	1	1200 Al	7	400 A K-Frame included	**37MM140R1240** ④
		1	1200 Cu	7		**37MM140R1240C** ④
	400	1	1200 Al	7	400 A K-Frame included	**37MM140HR1240** ⑤
		1	1200 Cu	7		**37MM140HR1240C** ⑤
	400	2	1200 Al	7	400 A K-Frame included	**37MM240R1240**
		2	1200 Cu	7		**37MM240R1240C**
	400 continuous	1	1200 Cu	7	400 A L-Frame included	**37MM140R1240KC** ⑥
	400 continuous	1	1200 Cu	7	400 A L-Frame included	**37MM140HR1240KC** ⑦

Notes

① If a socket in a 37MM meter stack module needs to be single-phase, order **37MM1CK**. This will convert the three-phase socket to single-phase.
② Retrofit tenant circuit breaker mounting kit (**37MMRCBK**) for installation of Type EHD and CV breakers. Needed only for stacks manufactured prior to February 2013. Order one kit per breaker.
③ 320 A continuous rated socket with provisions for two main tenant breakers.
④ Unit is bottom exit only.
⑤ Rated at 100 kAIC.
⑥ Rated at 25 kAIC.
⑦ Rated at 35 kAIC.

35SS

- Sockets include EUSERC required test-bypass-disconnect feature
- Ring type covers
- Single-phase units have provisions for two-pole main tenant breakers
- When applying 35SS (single-phase) stacks on 208Y/120 V, three-phase, four-wire and 240/120 V, three-phase, four-wire delta systems, refer to suffixes for proper phase balancing. Each meter stack module is phase balanced at the plant (A-B, B-C or A-C) and cannot be field modified
- Indoor/outdoor construction
- Main tenant breakers can exit top, bottom or back. If being used in outdoor application and exiting the top, mount Myer type hubs on rainproof cap
- Short-circuit ratings up to 100 A rms symmetrical depending upon the kAIC rating of installed main tenant circuit breakers and main device

35SS_

35SS—Three-Phase Commercial Meter Stack Modules ①

System Voltage	Ampere Rating Per Meter Socket	Number of Meter Sockets	Horizontal Bus Ampacity/ Material	Number of Jaws Per Meter Socket	Main Tenant Breaker Type ② (Page V1-T4-136)	Catalog Number
120/240 V, single-phase, three-wire systems and 208Y/120 V network metering (Not suitable for use on three-phase, four-wire delta systems)	225	1	1200 Al	5	Bolt-on type EHD2_ CCV2_X CCVH2_X CVS2_X CV2_X CVH2_X	**35SS120RAB** ③
			1200 Cu	5		**35SS120RABC** ③
			1200 Al	5		**35SS120RAC** ③
			1200 Cu	5		**35SS120RACC** ③
			1200 Al	5		**35SS120RBC** ③
			1200 Cu	5		**35SS120RBCC** ③
		2	1200 Al	5		**35SS220RAB** ③
			1200 Cu	5		**35SS220RABC** ③
			1200 Al	5		**35SS220RAC** ③
			1200 Cu	5		**35SS220RACC** ③
			1200 Al	5		**35SS220RBC** ③
			1200 Cu	5		**35SS220RBCC** ③
		3	1200 Al	5		**35SS320RAB** ③
			1200 Cu	5		**35SS320RABC** ③
			1200 Al	5		**35SS320RAC** ③
			1200 Cu	5		**35SS320RACC** ③
			1200 Al	5		**35SS320RBC** ③
			1200 Cu	5		**35SS320RBCC** ③

37SS

- Sockets include EUSERC required test-bypass-disconnect feature
- Ring type covers
- Three-phase units have provisions for three-pole main tenant breaker
- Aluminum horizontal bus supplied as standard

37SS—Three-Phase Commercial Meter Stack Modules ①

System Voltage	Ampere Rating Per Meter Socket	Number of Meter Sockets	Horizontal Bus Ampacity/ Material	Number of Jaws Per Meter Socket	Main Tenant Breaker Type ② (Page V1-T4-136)	Catalog Number
208Y/120 V, three-phase, four-wire 240/120 V, three-phase, four-wire delta (B-phase is high leg)	225	1	1200 Al	7	Bolt-on type EHD3_ CC3_X CVS3_X CV3_X CVH3_X	**37SS120R**
			1200 Cu	7		**37SS120RC**
		2	1200 Al	7		**37SS220R**
			1200 Cu	7		**37SS220RC**
		3	1200 Al	7		**37SS320R**
			1200 Cu	7		**37SS320RC**

Notes

① Reference drawing EUSERC DWG-304 for 100 A; Reference drawing EUSERC DWG-305 for 200 A.

② Retrofit tenant circuit breaker mounting kit (**37MMRCBK**) for installation of Type EHD and CV breakers. Needed only for stacks manufactured prior to February 2013. Order one kit per breaker.

③ Last two digits of catalog number indicate phase balancing (AB indicates all sockets in this stack are connected to phases A and B only).

Approximate Dimensions in Inches (mm)

Commercial Stacks (35MM and 37MM)

35MM and 37MM

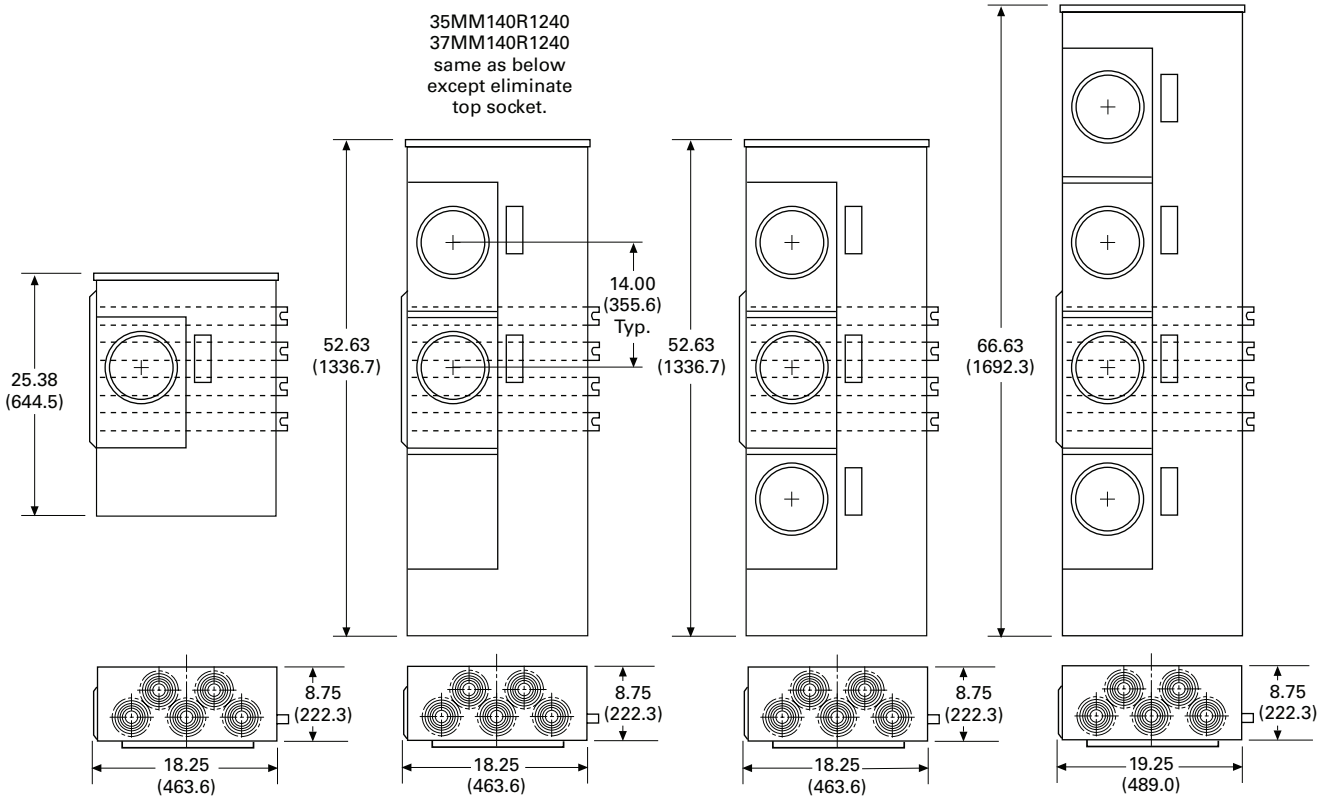

Approximate Dimensions in Inches (mm)

Commercial Stacks (35SS and 37SS)

35SS and 37SS

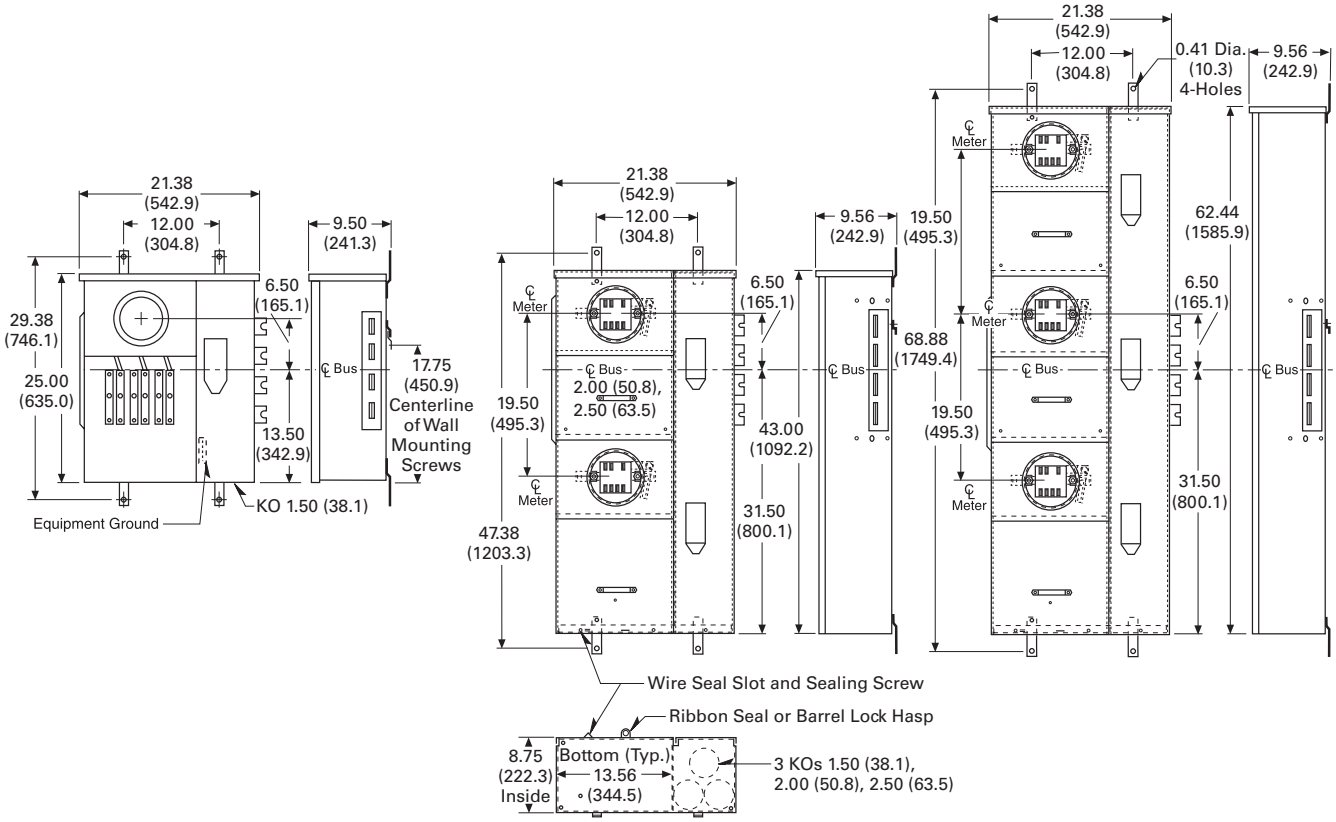

35MM, 37MM, 35SS and 37SS Main Tenant Circuit Breakers

CV2200/CV3200

Contents

Description	*Page*
Systems for Residential and Commercial Applications	**V1-T4-88**
Meter Packs	**V1-T4-90**
Type CCV 120/240 V Tenant Main Circuit Breaker	**V1-T4-95**
Type CV 120/240 V Tenant Main Circuit Breaker	**V1-T4-96**
Meter Packs—1MP, 1MM and 3MM Main Tenant Circuit Breakers	**V1-T4-98**
Main Service Modules	**V1-T4-101**
Surge Metering	**V1-T4-115**
Group Metering Inline Current Transformer Cabinets	**V1-T4-116**
Residential Meter Stacks	**V1-T4-118**
1MP, 1MM and 3MM Main Tenant Circuit Breakers	**V1-T4-127**
Phase Balanced Stack	**V1-T4-128**
Commercial Meter Stack Modules	**V1-T4-129**
35MM, 37MM, 35SS and 37SS Main Tenant Circuit Breakers	

35MM, 37MM, 35SS and 37SS Main Tenant Circuit Breakers

Product Description

- The following breakers are to be used on 35MM, 37MM, 35SS and 37SS modular metering stacks
- Series rating information available on **Pages V1-T4-144** through **V1-T4-147**
- Two-pole breakers are 120/240 Vac, field installed
- Three-pole breakers are 208Y/120 Vac, field installed

Product Selection

35MM, 37MM, 35SS and 37SS Main Tenant Circuit Breakers

Description	Number of Poles	Main Tenant Circuit Breaker Ampere Rating	10 kAIC Catalog Number	25 kAIC Catalog Number ①②	42 kAIC Catalog Number ①②	65 kAIC Catalog Number ①②	100 kAIC Catalog Number ①②
Bolt-On Type							
Bolt-on type circuit breakers used with 35MM and 35SS (single-phase modular metering stacks) ③④	2	60	**CCV2060X**	**CCVH2060X**	**CVS2060XMM**	**CV2060XMM**	**CVH2060XMM**
	2	70	**CCV2070X**	**CCVH2070X**	**CVS2070XMM**	**CV2070XMM**	**CVH2070XMM**
	2	80	**CCV2080X**	**CCVH2080X**	**CVS2080XMM**	**CV2080XMM**	**CVH2080XMM**
	2	90	**CCV2090X**	**CCVH2090X**	**CVS2090XMM**	**CV2090XMM**	**CVH2090XMM**
	2	100	**CCV2100X**	**CCVH2100X**	**CVS2100XMM**	**CV2100XMM**	**CVH2100XMM**
	2	125	**CCV2125X**	**CCVH2125X**	**CVS2125XMM**	**CV2125XMM**	**CVH2125XMM**
	2	150	**CCV2150X**	**CCVH2150X**	**CVS2150XMM**	**CV2150XMM**	**CVH2150XMM**
	2	175	**CCV2175X**	**CCVH2175X**	**CVS2175XMM**	**CV2175XMM**	**CVH2175XMM**
	2	200	**CCV2200X**	**CCVH2200X**	**CVS2200XMM**	**CV2200XMM**	**CVH2200XMM**
	2	225	**CCV2225X**	**CCVH2225X**	**CVS2225XMM**	**CV2225XMM**	**CVH2225XMM**
Bolt-On Type							
Bolt-on type circuit breakers used with 37MM and 37SS (three-phase modular metering stacks) ③④	3	60	**EHD3060**	**CVS3060X**	**CVS3060X**	**CV3060X**	**CVH3060X**
	3	70	**EHD3070**	**CVS3070X**	**CVS3070X**	**CV3070X**	**CVH3070X**
	3	80	**EHD3080**	**CVS3080X**	**CVS3080X**	**CV3080X**	**CVH3080X**
	3	90	**EHD3090**	**CVS3090X**	**CVS3090X**	**CV3090X**	**CVH3090X**
	3	100	**CC3100X**	**CVS3100X**	**CVS3100X**	**CV3100X**	**CVH3100X**
	3	125	**CC3125X**	**CVS3125X**	**CVS3125X**	**CV3125X**	**CVH3125X**
	3	150	**CC3150X**	**CVS3150X**	**CVS3150X**	**CV3150X**	**CVH3150X**
	3	175	**CC3175X**	**CVS3175X**	**CVS3175X**	**CV3175X**	**CVH3175X**
	3	200	**CC3200X**	**CVS3200X**	**CVS3200X**	**CV3200X**	**CVH3200X**
	3	225	**CC3225X**	**CVS3225X**	**CVS3225X**	**CV3225X**	**CVH3225X**

Notes

① #6–4/0 kcmil wire size range for CVS, CV and CVH tenant main circuit breakers. If #2–300 kcmil is needed, order **2TA225CVK** (two-pole) **3TA225CVK** (three-pole). One kit is needed per breaker.

② "MM" suffix provides mounting hardware needed for 1MP, 1MM and 3MM modular metering stacks only. Mounting hardware is not needed for use in 35MM and 35SS modular metering stacks, but is included as standard with breakers.

③ Retrofit tenant circuit breaker mounting kit (**37MMRCBK**) for installation of Type EHD and CV breakers. Needed only for stacks manufactured prior to February 2013. Order one kit per breaker.

④ Type EHD main tenant circuit breakers are also available from 15 to 50 A.

Accessories

1MP, 1MM and 3MM Modular Metering Stacks

	Description	Application	Catalog Number
Fifth Jaw Kit	Fifth jaw kit	Bolted onto neutral in the 3, 6 or 9 o'clock position. Typically used on network metering systems (three-phase in/single-phase out) or when specified by utility company.	**1MM5JK**
	Isolated fifth jaw kit	Connects to the neutral with an insolated wire.	**1MM5JKOP**
Manual Bypass Kit	Manual bypass kit (ring style socket only)	For use with 125 A sockets only. (Not top socket.)	**1MMBPM125**
		For use with 200 A sockets only. (Not top socket.)	**1MMBPM200**
		This kit only to be used for top position of two- and three-high 125 A 1MM and 3MM stacks and of 2, 5 and six-position 125 A 1MP packs.	**1MMBPM125T**
		This kit only to be used for top position of 200 A two-position 1MP packs.	**1MMBPM200T**
Horn Bypass Kit	Horn bypass	Used only on ringless cover stacks, kits can be installed on 125 A or 200 A sockets.	**1MMBPH**
		Note: For **1MP2122RRL** use:	**WCG8HB** ①
	Meter bypass jumper	Installed on 125 A or 200 A sockets. Jumpers are plugged into jaws. Order Lexan® cover plate with bypass jumpers to prevent access to meter socket once energized. (Not UL listed.)	**1MMBPJ**
Lexan Blank Cover	Lexan blank cover	Circular cover mounted on ring or ringless devices preventing access to meter socket while meter is not in place. Includes four plastic tabs that plug into each jaw.	**1MMPCP**
		Same as **1MMPCP** minus the tabs located in the back to plug into jaws. This device to be used while meter bypass jumpers are in place (**1MMBPJ**).	**1MMACP**
	Blank meter socket cover	Used for 125 A stacks. Fits bottom socket only. Kit replaces existing meter cover preventing access to meter socket. Includes hasp for seal.	**1MMBC125B**
		Used on 200 A stacks. Fits bottom socket only. Kit replaces existing meter cover preventing access to meter socket. Includes hasp for seal.	**1MMBC200B**
Wall Mounting Rail	Wall mounting rail	Rails are 4 feet (1.2m) in length. Bolted on wall for stacks, packs and mains to be hung.	**1MMWB**
Bussed Spacer	Bussed spacer	Bussed spacer 1200 A 4-inch (101.6 mm). Required when stacks are mounted on right-hand side in EUSERC areas. (copper)	**3MMBSK** ②
	Bus duct riser/ meter center connection	Available in 400, 600, 800 A main fusible units only. Contact product line for details.	—

Notes

① WCG8HB only applies to meter packs built prior to 1998. Current meter packs use **1MMBPH**.

② Must be used when mounting MCB main next to an MTB main or another MCB main device.

Accessories for 1MP, 1MM and 3MM Modular Metering Stacks, continued

Indoor Corner Elbow

Standard Sealing Ring

Description	Application	Catalog Number
Indoor corner elbow (copper)	12-inch (304.8 mm) indoor corner elbow, 1200 A, three-phase, four-wire for use with 1MM and 3MM only. **Do not use with 35MM, 37MM, 35SS or 37SS stacks.** 12-inch corner elbow not EUSERC approved.	**3MMEB12**
Indoor corner elbow (copper)	16-inch (406.4 mm) indoor corner elbow, 1200 A, three-phase, four-wire for use with 1MM, 3MM, 35MM, 37MM, 35SS and 37SS.	**3MMEB16**
Barrier	Barrier for individual sockets	**1MMBK**
Meter jumper and cover	Combination meter jumper and cover (200 A maximum). Used to jumper line and load jaws as well as cover meter socket preventing exposure to current carrying parts.	**1MMJCK**
Lug block	125 A two-pole lug block assembly.	**BRSF125**
Sealing ring	Stainless steel screw type with brass screw	**1MMSR1**
	Standard (included with packs and stacks) ①	**1MMSR2**
	Stainless steel screw type with cast zinc screw	**1MMSR4**
	Aluminum screw type with locking provisions	**1MMSR5**
Top endwall	125 A, NEMA 1 top end wall with knockouts for 1MM, 3MM meter stacks	**MM12N1WLK**
	200 A, NEMA 1 top end wall for 1MM, 3MM meter stacks	**MM20N1WLK**

Note

① Aluminum Snap Type.

Renewal Parts

1MP, 1MM and 3MM Replacement Parts

	Description	Application	Catalog Number
Ringless Cover	Ringless cover (can install this to go from ring to ringless)	Installed on 125 A socket for ringless security	**1MMRC125**
		Installed on 200 A socket for ringless security	**1MMRC200**
		For use with top position of 125 A, two- and three-position,1MM and 3MM stacks and two-, five- and six-position 1MP packs	**1MMRC125T**
		Top-position two position IMP	**1MMRC200T**
Ring Cover	Ring cover	Installed on 125 A socket for ring security	**1MMCP1**
		Installed on 200 A socket for ring security	**1MMCP2**
		Top socket ring cover 125 A	**1MMCP1T**
		Top socket ring cover 200 A	**1MMCP2T**
Tenent Breaker Cover	Tenant breaker hinged cover	125 A cover	**1MMBC1**
		200 A cover	**1MMBC2**
Meter Socket	Meter socket ①	125 and 200 A	**1MMMS**
	Busbar end cap	Flat—left side	**47-24139A**
		Bump—right side	**47-28172-2A**
	Main circuit breaker cover kit (black)		**49-7060**

Notes

① Meter Packs **1MP2122RRL** and **1MP2122RRLB** use different meter sockets. See Renewal Parts listing RP.32A.01A.T.E for details.

See **RP00501001E** for a complete Renewal Parts listing.

Accessories for 35MM and 37MM Modular Metering Stacks

	Description	Application	Catalog Number
	Wall mounting rail	Rails are 4 feet (1.2m) in length. Bolted on wall for stacks, packs and mains to be hung.	**1MMWB**
	Indoor corner elbow (copper)	16-inch (406.4 mm) indoor corner elbow, 1200 A, three-phase, four-wire for use with 1MM, 3MM, 35MM, 37MM, 35SS and 37SS.	**3MMEB16**
	Handle insulator	Each meter block includes a lever bypass. This kit includes the sleeve which slides onto the lever handle.	**37MMHC**
Barrel Lock Bracket Kit	Barrel lock bracket kit	Needed when using barrel lock security.	**37MMBLK**
Totalizing Jumper Kit	Totalizing jumper kit	Used if one socket is to meter two tenant feeds. When ordering jumper kit, should also order a plastic cover plate (**1MMPCP + IMMJCK**) preventing access to live parts on unused socket.	**37MMTJK**
Type EHD and CV Breaker Retrofit Mounting Kit	Type EHD and CV breaker retrofit mounting kit	Retrofit mounting hardware for installation of Type EHD and CV breakers in 35MM, 37SS, 37MM and 37SS meter stacks manufactured prior to February 2013. Order one kit per breaker.	**37MMRCBK**
Type CV Breaker Mounting Kit	Type CV breaker mounting kit	Replacement Type CV breaker mounting hardware kit. Used in 200 A 1MP/1MM/3MM modular metering stacks at 42, 65 and 100 kAIC.	**1MMCBK**
Blank Cover Kit	Blank cover kit	Kit replaces meter cover preventing access to socket.	**37MMCK** ①
			37MMCKA ②
	Barrier	Barrier for individual sockets	**37MMBK**
Three-Phase to Single-Phase Conversion Kit	Three-Phase to single-phase conversion kit	This kit will convert one three-phase meter socket (37MM devices) to a single-phase socket. Only needed if phasing A-C or C-B. If single-phase socket is to be phased A-B, kit is not required for field conversion. (Must use three-phase breaker.)	**37MM1CK**
	Bus duct riser/meter center connection	Available in 400, 600, 800 A Main fusible units and 400, 600, 800, 1000, 1200 main circuit breaker. Contact product line for details.	—
	Anti-inversion clip	This clip should be inserted into upper right hand jaw of a 320 A meter socket. The purpose is prevent a 200 A meter from being inserted into a 320 A meter socket.	**37MMINVCLIP**

Notes

① For all units made 10/2002 and earlier.

② For all units made after 11/2002.

Renewal Parts

35MM and 37MM Modular Metering Stacks

	Description	Application	Catalog Number
35MM Replacement Meter Socket	35MM replacement meter socket	To replace meter socket with lever bypass and jaw release.	**MSLMSA1**
	37MM replacement meter socket	To replace meter socket with lever bypass and jaw release.	**MSLMSA2**
37SS Replacement Meter Socket	35SS replacement meter socket	To replace meter socket with test bypass disconnect feature	**MSTMSA1**
	37SS replacement meter socket	To replace meter socket with test bypass disconnect feature	**MSTMSA2**
	Safety socket meter cover assembly	To replace ring type cover over the meter prior to 7/1/02.	**MSTMCVR1**
	Safety socket meter cover assembly	To replace ring type cover over the meter after 7/1/02	**MSTMCVR1E**
Meter Cover Assembly 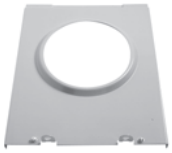	35MM and 37MM meter cover assembly	Prior to 12/1/02	**37MMSK**
		After 12/1/02	**37MMSK1**
	Meter cover assembly with NJ latch	To replace ringless cover over the meter. Includes New Jersey latch requirement.	**37MMSKNJ**
	Tenant breaker hinged cover	To replace cover over tenant breakers.	**1MMBC2**
	Busbar end cap	Flat—left side	**47-24139A**
		Bump—right side	**47-28172-2A**
	Main circuit breaker cover/CIT (black)		**49-7060**

Note

See **RP.32A.01.T.E** for a complete Renewal Parts listing.

Technical Data and Specifications

Phase Balancing

All 3MM meter modules come factory connected to phase A and B, per Figure A. When connected to a 208Y/120 Vac three-phase, four-wire system, field phase balancing of two out of every three stacks is required. One of every three stacks should be phased AC, per Figure B, and one of every three stacks should be phased CB, per Figure C.

Examples:

Nine Total Positions—use (three) three-position stacks and phase one per Figure B (A-C phasing) and one per Figure C (C-B phasing).

16 Total Positions—use (two) five-position and (two) three-position stacks. Phase balance (one) five-position per Figure B (A-C phasing) and (one) five-position per Figure C (C-B phasing).

19 Total Positions—where four-position maximum height is allowed by utility. Use (one) four-position and (five) three-position stacks. Phase balance (two) three-position stacks per Figure B (A-C phasing) and (two) three-position stacks per Figure C (C-B phasing).

"Z" Shaped and "Barrel" Shaped Phase Connector

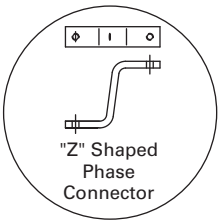

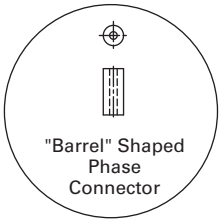

Phase Balancing

	125 A STACKS	200 A STACKS
FIGURE A	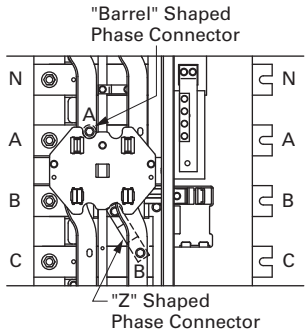 **FACTORY 125 A A-B PHASING**	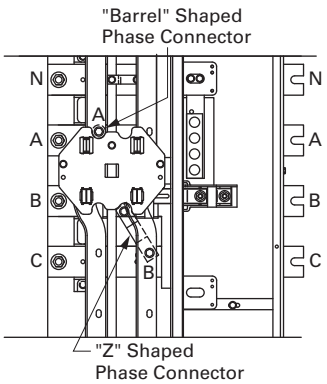 **FACTORY 200 A A-B PHASING**
FIGURE B	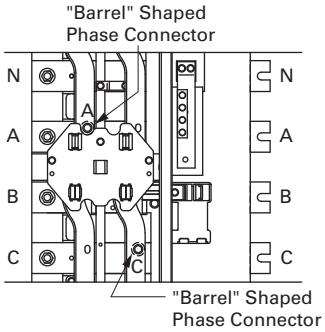 **FIELD 125 A A-C PHASING** Remove "Z" Phase Jumper from "B" Phase Horizontal Bus Replace with "Barrel" Phase Jumper from kit 99-4184 Supplied with Meter Stack and attach to "C" Phase Bus as shown. Torque to 60 lb-in (6.78 N-M) Retain "Z" Phase Jumper for future use.	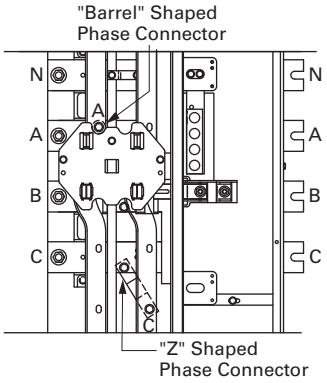 **FACTORY 200 A A-C PHASING** Remove "Z" Phase Jumper from "B" Phase Horizontal Bus Reattached at "C" Phase Horizontal Bus as Shown. Torque to 60 lb-in (6.78 N-M)
FIGURE C	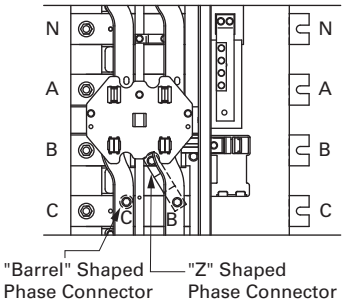 **FIELD 125 A C-B PHASING** Remove "Barrel" Phase Jumper from "A" Phase Horizontal Bus Reattached at "C" Phase Horizontal Bus as shown. Torque to 60 lb-in (6.78 N-M)	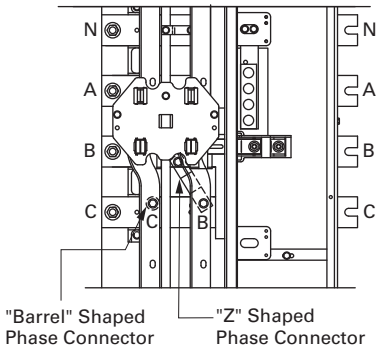 **FACTORY 200 A C-B PHASING** Remove "Barrel" Phase Jumper from "A" Phase Horizontal Bus Reattached at "C" Phase Horizontal Bus as shown. Torque to 60 lb-in (6.78 N-M)

Series Combination Short-Circuit Ratings

When main tenant breakers are installed in Eaton's modular metering stack per the table on **Page V1-T4-145**, the branch breakers installed in downstream panel rated 10 kAIC or greater are protected to the listed series AIC rating. Refer to the downstream panel marking for the proper series combination short-circuit ratings.

Replacement or additional breakers shall be of the same manufacture and type, and shall have an interrupting rating equal to or greater than the interrupting rating of any main tenant breaker installed.

Series Combination Short-Circuit Ratings

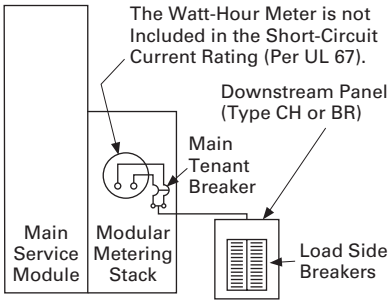

Series Combination Short-Circuit Ratings—240 Vac

Main Module Overcurrent Device Breaker Type or Class Fuse	System AIC Rating 120/240 Vac Maximum	Meter Module Tenant Feeder Breaker Type 1MM, 3MM, 35MM, 37MM, 35SS, 37SS or Loadcenter Main Breaker	Tenant Feeder Breaker Short-Circuit Rating	Loadcenter Branch Breaker (Single-, Two- or Three-Pole)
None	10,000	None	—	BD, BR, BRD, BQ, BQC, GFCB, CH, CHT, BRCAF, CHFCAF, CHF, CH-GFCI
Without main disconnect. Cable tap box Type 1MTB_, 3MTB_	10,000	BR_, CC_, BW_, CCV_	10,000	
	22,000	BRH_	22,000	
	25,000	CSR_, CHH_H2, CCVH_	25,000	
	42,000	BRHH_, CHH_H4, CVS_	42,000	
	65,000	BRX_, CV_, KD_, HKD_	65,000	
	100,000	CHH_, CVH_, KDC_	100,000	
Main switch module Type 1MFS_, 3MFS_ with Class T fuse, 400 A maximum	42,000	BRH_	22,000	CH, CHT, CH3, CH-GFCI
Main switch module Type 1MFS_, 3MFS_ with Class T fuse, 600 A maximum	100,000	BRH_	22,000	BD, BR, BRD, BQ, BQC, GFCB
Main switch module Type 1MFS_, 3MFS_ with Class T fuse, 1200 A maximum	10,000	BR_, CC_, BW_, CCV_	10,000	BD, BR, BRD, BQ, BQC, GFCB, CH, CHT, BRCAF, CHFCAF, CHF, CH-GFCI
	22,000	BRH_	22,000	
	25,000	CSR_, CHH_H2, CCVH_	25,000	
	42,000	BRHH_, CHH_H4, CVS_	42,000	
	65,000	BRX_, CV_, KD_, HKD_	65,000	
	100,000	CHH_, CVH_, KDC_	100,000	
Main switch module Type 1MFS_, 3MFS_ with Class T fuse, 1200 A maximum	100,000	BRHH_	42,000	BD, BR, BRD, BQ, BQC, GFCB, CH, CHT, BRCAF, CHFCAF, CHF, CH-GFCI
Main switch module Type 1BPS_, 3BPS_ with Class L fuse, 1200–2000 A	10,000	BR_, CC_, BW_, CCV_	10,000	BD, BR, BRD, BQ, BQC, GFCB, CH, CHT, BRCAF, CHFCAF, CHF, CH-GFCI
	22,000	BRH_	22,000	
	25,000	CSR_, CHH_H2, CCVH_	25,000	
	42,000	BRHH_, CHH_H4, CVS_	42,000	
	65,000	BRX_, CV_, KD_, HKD_	65,000	
	100,000	CHH, CVH_, KDC_	100,000	
Main breaker module Type 1MCB_, 3MCB_ with KD, HKD (400 A maximum) LD, HLD (600 A maximum) MDL, HMDL (800 A maximum) ND, NGS, HND, NGH (1200 A maximum) RD, RGH (2000 A maximum)	10,000	BR_, CC_, BW_, CCV_	10,000	BD, BR, BRD, BQ, BQC, GFCB, CH, CHT, BRCAF, CHFCAF, CHF, CH-GFCI
	22,000	BRH_	22,000	
	25,000	CSR_, CHH_H2, CCVH_	25,000	
	42,000	BRHH_, CHH_H4, CVS_	42,000	
	65,000	BRX_, CV_, KD_, HKD_	65,000	
	100,000 ①	CHH_, CVH_, KDC_	100,000	

Note

① 100,000 A rating with 100,000 A rated main.

1MP 125 A Meter Module

This All-in-One Meter Module is UL listed for the short-circuit rating at 240 Vac maximum in rms symmetrical amperes per table below.

1MP 125 A Meter Module

Tenant Breaker Catalog Number Two-Pole	Maximum Ampere Rating	UL Listed Series Short-Circuit Rating
BRX_____	125	65 kAIC
BRHH_____	125	42 kAIC
BRH_____	125	22 kAIC
BR_____	125	10 kAIC

When Type BRX, BRHH or BRH tenant breakers are installed in this meter module, then Eaton's breakers rated 10 kAIC or greater installed on the load side of this meter module may be protected for short circuits up to 22 kAIC with Type BRH breakers, 42 kAIC with Type BRHH or 65 kAIC with Type BRX breakers.

See load side breaker panel marking for proper short-circuit current rating.

1MP 125 A Meter Module

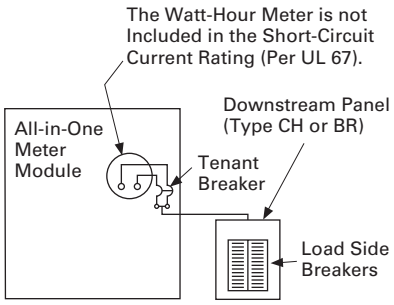

Note: The ratings for both 125 and 200 A tenant positions apply to both Type BR and CH loadcenters and 10 kAIC branch breakers.

1MP 200 A Meter Module

This All-in-One Meter Module is UL listed for the short-circuit rating at 240 Vac maximum in rms symmetrical amperes per table below.

1MP 200 A Meter Module

Tenant Breaker Catalog Number Two- or Three-Pole	Maximum Ampere Rating	UL Listed Series Short-Circuit Rating
CVH_XMM	200	100 kAIC
CV_XMM	200	65 kAIC
CVS_XMM	200	42 kAIC
CCVH_XMM	200	25 kAIC
CCV_X	200	10 kAIC

When Type CV tenant breakers are installed in this meter module, then breakers rated 10 kAIC or greater installed on the load side of this meter module may be protected for short circuits up to 100 kAIC.

See load side breaker panel marking for proper short-circuit current rating.

1MP 200 A Meter Module

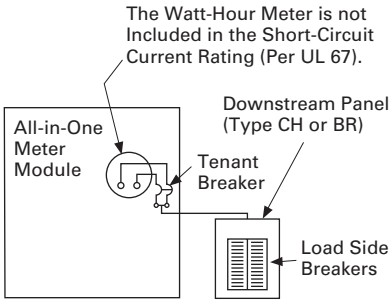

General

When tenant breakers are installed in Eaton's metering modules per the short-circuit current ratings below, the branch breakers installed in downstream panel rated 10 kAIC or greater are protected to the listed series AIC rating. Refer to the downstream panel marking for the proper series combination short-circuit ratings. These ratings apply to both loadcenter Types BR and CH.

The short-circuit rating is limited to the lowest interrupting rating of any tenant breaker installed or to the lowest marked interrupting rating of the main switch, main breaker or main lug modules.

Replacement or additional breakers shall be of the same type and manufacturer, and shall have an interrupting rating equal to or greater than the interrupting rating of any tenant breaker presently installed in the meter module.

1MM, 3MM 125 A Meter Module

When used with main switch, main breaker or main lug modules, this meter module is UL listed for the short-circuit rating at 240 Vac maximum in rms symmetrical amperes per table below.

1MM, 3MM 125 A Meter Module

Tenant Breaker Catalog Number Two-Pole	Amperes Maximum	UL Listed Series Short-Circuit Rating
BRX_____	125	65 kAIC
BRHH_____	125	42 kAIC
BRH_____	125	22 kAIC
BR_____	125	10 kAIC

When Type BRX, BRHH or BRH tenant breakers are installed in this meter module, then breakers rated 10 kAIC or greater installed on the load side of this meter module may be protected for short circuits up to 22 kAIC with Type BRH breakers, 42 kAIC with Type BRHH or 65 kAIC with Type BRX breakers.

See load side breaker panel marking for proper short-circuit current rating.

1MM, 3MM 125 A Meter Module

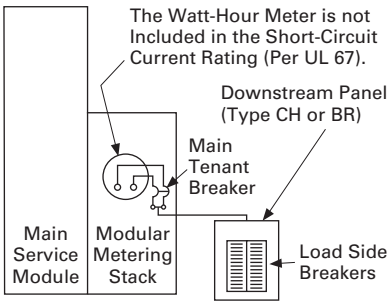

1MM, 3MM, 200 A Meter Modules; 35MM, 37MM, 35SS and 37SS 225 A Meter Modules

When used with main switch, main breaker or main lug modules, these meter modules are UL listed for the short-circuit rating at 240 Vac maximum in rms symmetrical amperes per table below.

1MM, 3MM, 200 A Meter Modules; 35MM, 37MM, 35SS and 37SS 225 A Meter Modules

Tenant Breaker Catalog Number Two- or Three-Pole	Amperes Maximum 1MM 3MM 200 A	Amperes Maximum 35MM, 37MM, 35SS, 37SS 225 A	UL Listed Series Short-Circuit Rating
CVH_XMM	200	225	100 kAIC
CV_XMM	200	225	65 kAIC
CVS_XMM	200	225	42 kAIC
CCVH_X	200	225	25 kAIC
CCV_X	200	225	10 kAIC
CC_X	200	225	10 kAIC

When Type CV tenant breakers are installed in these meter modules, then Eaton's breakers rated 10 kAIC or greater installed on the load side of these meter modules may be protected for short circuits up to 100 kAIC.

See load side breaker panel marking for proper short-circuit current rating.

1MM, 3MM, 200 A Meter Modules; 35MM, 37MM, 35SS and 37SS 225 A Meter Modules

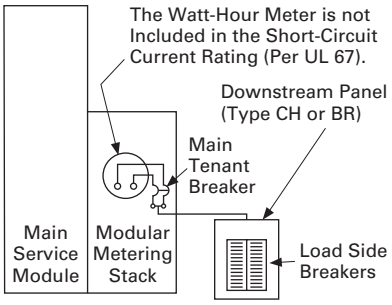

Ratings

A. The assembly shall be rated to withstand mechanical forces exerted during short-circuit conditions when connected directly to a power source having available fault current [22,000] [42,000] [65,000] [100,000] amperes symmetrical at rated voltage.

Construction

A. The entire assembly shall be front accessible and shall include [main lugs] [a main disconnect device].

B. Tenant disconnects shall be wired for cold sequence and shall be molded case circuit breakers.

C. The meter sockets shall be (ring-) (ringless-) type rated (125 A) (200 A) (as shown on the plans) and a bypass (shall be) (shall not be) required. If required, the bypass shall be a (slider-) (horn-) (lever-) (disconnect block-) type. The meter sockets and associated branch protective device positions shall be completely prewired and shipped ready for installation of the meters and tenant main breakers. Meter sockets shall include covers with sealing positions.

Bus

A. All busbars shall be [tin-plated aluminum or copper]. Main horizontal busbars shall be mounted with all three phases arranged in the same vertical plane. Bus sizing shall be based on UL standard temperature rise criteria for multiple metering equipment.

B. Provide a full capacity neutral bus where a neutral bus is indicated on the drawings.

C. All hardware used for busbar connections shall be high-tensile strength, zinc-plated. Provide Belleville-type spring washers for all bus joints.

Wiring/Terminations

A. [Mechanical-type terminals] [Crimp-type termination provisions] shall be provided for all line terminations suitable for copper or aluminum cable and rated at 75 °C.

B. Lugs shall be provided in the incoming line section for connection of the main grounding conductor.

Main Circuit Protective Devices

A. Main protective devices shall be [molded case circuit breakers] [bolted pressure switches] [quick-make/quick-break fusible switches].

Molded Case Circuit Breakers

A. [Main] [Feeder] [All] protective devices shall be molded case circuit breakers with inverse time and instantaneous tripping characteristics.

B. Circuit breakers shall be operated by a toggle-type handle and shall have a quick-make/quick-break over-center switching mechanism that is mechanically trip-free. Automatic tripping of the breaker shall be clearly indicated by the handle position. Contacts shall be nonwelding silver alloy and arc extension shall be accomplished by means of DE-ION® arc chutes.

C. Circuit breakers shall have a minimum symmetrical interrupting capacity as indicated on the drawings.

D. Circuit breakers [250-] [400-] [600-] [1200-] ampere frame and below shall be manufactured by Eaton with thermal-magnetic or electronic trip units having inverse time-current characteristics.

E. Circuit breakers shall be UL listed for series application.

Bolted Pressure Switches

A. Main protective devices shall be bolted pressure contact type and shall be UL listed.

B. Fusible switches shall be furnished with Class L fuse clips. Switch contact interrupting capacity shall be 12 times the continuous rating of the switch.

C. Fuse access door s hall be mechanically interlocked with the operating handle and shall have provisions for padlocking the switch in the OPEN position.

D. The switch shall use a stored energy deadfront operating mechanism compressed and released by the operating handle, to provide quick positive switching action, independent of the operating handle.

E. Switches shall be manually operated.

Quick-Make/Quick-Break Fusible Switches

A. Fusible switches 30 A through 1200 A frames shall be furnished with 300 V Class T-type fuse clips unless otherwise scheduled.

B. Switches shall incorporate safety cover interlocks to prevent opening the cover with the switch in the ON position.

C. Provide defeater for authorized personnel.

D. Handles shall have provisions for padlocking and shall clearly indicate the ON or OFF position.

E. Front cover doors shall be padlockable in the CLOSED position.

F. Main protective devices shall be quick-make/quick-break fusible switches as manufactured by Eaton.

Tenant Utility Metering

A. For EUSERC serviced areas, meter centers shall incorporate metering sections with tenant feeder circuits using ring-type meter sockets rated [125] [200] amperes to meet local utility and/or customer requirements.

B. The self-contained meter sockets shall include a test bypass/disconnect block per EUSERC requirements,

– OR–

A. For non-EUSERC serviced areas, meter centers shall incorporate metering sections with tenant feeder circuits using [ring-] [ringless-] type meter sockets rated [125] [200] [320] amperes to meet local utility or customer requirements. Provide meter sockets with individual covers having sealing provisions.

B. Meter sockets shall have manual bypass and optional internal barriers.

Enclosures

A. NEMA 1 Enclosure

– OR–

A. Outdoor NEMA 3R Surface-Mounted Enclosure

Finish

A. Boxes and trims shall be bonderized and finished with ANSI 61 light gray enamel.

Dimensions

Approximate Dimensions in Inches (mm)

General Layout

Minimum and maximum height of single-phase and three-phase meter sockets above typical ground level.

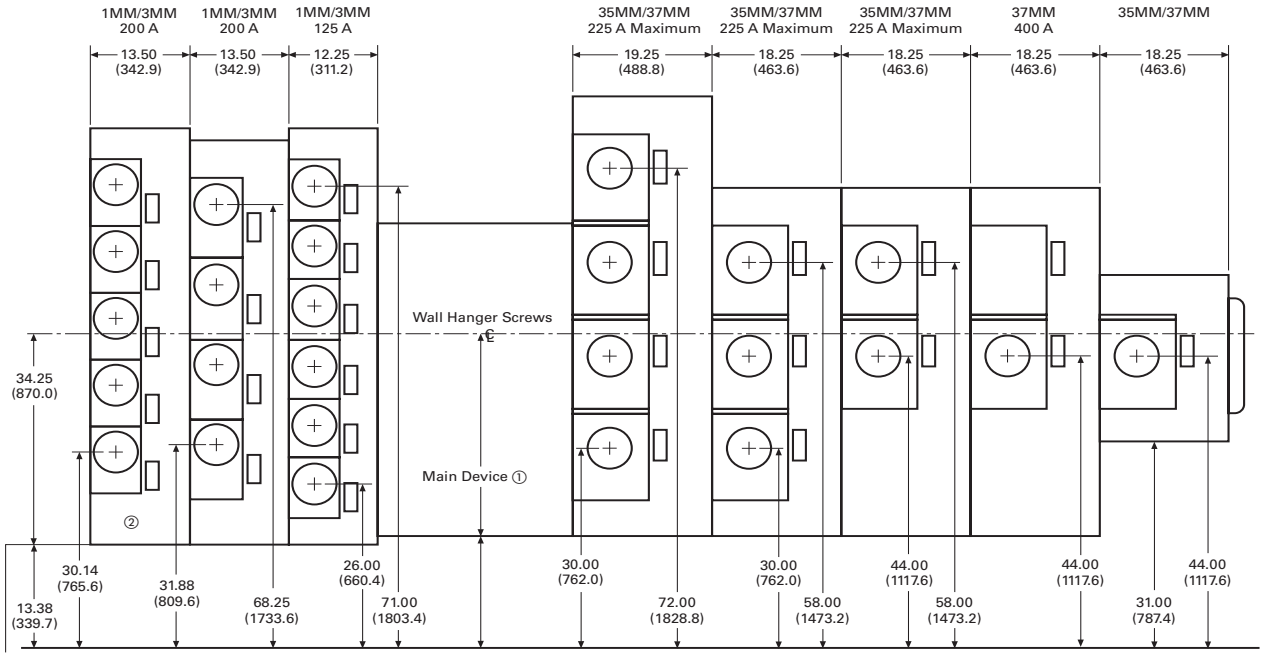

Mounting Features

Mounting Features

A standard mounting rail and factory-installed swing away feet, speed up and simplify installation.

Notes

① Not a constant value. Dimension changes depending on main device chosen. See **Page V1-T4-110** for specific dimensions.

② Residential device.

Power Pedestals

Construction Site and RV Parks

Marina Power and Lighting

Mobile Home Panels

5.1 Introduction

Product Description V1-T5-2
Application Description V1-T5-2
Optional Features V1-T5-2

5.2 Temporary Power/RV Park

Product Overview V1-T5-3
Product Description V1-T5-3
Application Description V1-T5-4
Features and Benefits V1-T5-4
Standards and Certifications V1-T5-5
Catalog Number Selection V1-T5-6
Product Selection V1-T5-7
Accessories V1-T5-7
Renewal Parts V1-T5-8
Surface Units V1-T5-10
Product Overview V1-T5-10
Product Selection V1-T5-10
Dimensions V1-T5-13
Pedestal Units V1-T5-16
Product Overview V1-T5-16
Product Selection V1-T5-16
Dimensions V1-T5-18

5.3 Mobile Home Panels

Product Overview V1-T5-21
Features V1-T5-21
Catalog Number Selection V1-T5-22
Product Selection V1-T5-22
Accessories V1-T5-23
Dimensions V1-T5-24

5.4 RV Park Hook-Ups

Power Pedestals V1-T5-28
Powerhouse Power Pedestal V1-T5-30
Powerhouse—Stainless Steel (SS) Power Pedestal V1-T5-33
Newport Camp Mate Power Pedestal V1-T5-36
Park Light Power Pedestal V1-T5-39
Firehouse V1-T5-42
Digital Electronic Kilowatthour Meters V1-T5-44
Distribution Equipment—Ground Fault Monitor V1-T5-45
Distribution Equipment—Substations V1-T5-46
Distribution Equipment—Panels V1-T5-49
Distribution Equipment—Transformers V1-T5-50

5.5 Marina Power and Lighting Equipment

Power Pedestals V1-T5-51
Lighthouse V1-T5-54
Lighthouse–SS V1-T5-58
Admiral–SS V1-T5-62
Newport Harbor Mate V1-T5-65
Hatteras Light V1-T5-69
Firehouse V1-T5-73
Smart Start V1-T5-79
Mariner V1-T5-80
Digital Electronic Kilowatthour Meters V1-T5-81
Distribution Equipment—Ground Fault Monitor V1-T5-82
Distribution Equipment—Mega Yacht Powerpoint V1-T5-83
Distribution Equipment—Substations V1-T5-86
Distribution Equipment—Panels V1-T5-89
Distribution Equipment—Transformers V1-T5-90

Don't Give Up!

If you don't find the product you want in this catalog, try the Flex Center at **1-800-330-6479**.

Power Pedestals

Contents

Description

Introduction

Product Description

A power pedestal is a device designed for outdoor service to meet temporary power requirements at construction sites, marinas, recreational vehicle (RV parks, marinas and mobile home parks). Power pedestals provide a safe and reliable means for users to access electricity at such locations.

Application Description

Construction Site and RV Parks

Power outlet panels on construction sites and in RV parks provide a safe and reliable means for users to access electricity. A wide range of products are available with multiple features and enclosure material options.

Construction Site and RV Parks

Mobile Home Panels

Eaton's versatile mobile home panels have a user-friendly design that allows for a faster, cleaner installation. Mobile home panels are designed for service entrance distribution, and include a meter and distribution section with breaker and receptacle configuration options.

Mobile Home Panels

Marina Power and Lighting

Park lighting and marina pedestals offer robust enclosure options with premium features to enhance user convenience at marinas and campgrounds.

Marina Power and Lighting

Optional Features

- Product can ship from the factory completely assembled and prewired
- External light
- TV and telephone jacks
- Ground fault monitors
- Digital electronic kilowatthour meters
- Water faucet
- Available GFI (ground fault interrupter) protection
- Weatherproof engineered resin enclosure (will never rust or deteriorate)
- Stainless steel to meet and exceed all applicable codes, and withstand harsh inland and coastal environments

Power Outlet Panels

Contents

Description	*Page*
Product Overview	V1-T5-3
Application Description	V1-T5-4
Features and Benefits	V1-T5-4
Standards and Certifications	V1-T5-5
Catalog Number Selection	V1-T5-6
Product Selection	V1-T5-7
Accessories	V1-T5-7
Renewal Parts	V1-T5-8
Surface Units	V1-T5-10
Pedestal Units	V1-T5-16

Product Overview

A power outlet panel (or POP) is a device designed for outdoor service to meet temporary power requirements at construction sites and RV parks. POPs provide a safe and reliable means for users to access electricity at such locations.

Product Description

Power outlet panels shall be designed for outdoor service to meet temporary power outlet requirements at construction sites and provide high quality, economical power to individual sites at RV parks. POPs shall be provided with means to bond the neutral for temporary service entrance applications. RV panels shall have a factory-installed insulated neutral bar.

Receptacles and Circuit Protection

Circuit protection shall be Eaton's UL listed full-size Type BR or half-size Type BD circuit breakers. The receptacles shall be NEMA commercial/industrial grade devices. Ground fault protection (GFCB) shall be provided at the 20 A duplex NEMA 5-20R receptacle or 20 A single-pole circuit breaker when required. Ground fault protection shall be provided at the circuit breaker for receptacles above 20 A when required.

Construction

The power outlet panel pedestal shall be of deadfront design and constructed of heavy gauge, 100 percent galvanized steel. Baked-on polyester powder coating shall be used for excellent mechanical strength, plus resistance to chalking caused by the sun's ultraviolet rays. The power outlet panel surface and pedestal units shall have NEMA Type 3R rainproof enclosures.

Ease of Installation

Panels shall ship from the factory completely assembled, prewired with 100 percent copper wire, and tested in accordance with UL Standard 231. The door shall swing up and open for user convenience and ease of access to breakers and receptacles. When required, a means for securing the door in the open position shall be provided. Panels shall be bottom fed through knockouts in endwall or top fed using a bolt-on raintight hub. Knockouts shall range from 1/2-inch (12.7 mm) to 1-1/2 inches (38.1 mm). Grounding provisions (#4–14 Cu/Al) shall be provided on all panels.

Application Description

POPs are also sometimes called temporary power panels, temporary site service equipment or RV panels.

Construction Site Application

When POPs are used at a construction site, they are installed on a temporary basis until permanent electrical power is available at the building. The most common reason for needing a POP at a construction site is to provide a power source for the contractor's tools.

Construction Site Application

RV Park Applications

When POPs are used at an RV park, they are installed for more permanent use and serve the purpose of providing power to the recreational vehicles. Many RV parks now supply customers with amenities such as lighted POPs with TV and telephone jacks.

RV Park Application

Service Applications

Suitable for use as temporary Service Entrance Equipment, temporary power service equipment and recreational vehicle site supply.

Features and Benefits

- Designed for outdoor service to meet power outlet requirements
- Receptacles conform to NEMA and/or ANSI configurations as specified by the National Electrical Code® (NEC)
- Includes a factory-installed insulated neutral bar with provisions for bonding when used for temporary service entrance applications
- 125 A rated meter socket
- Temporary power and RV park POPs are CSA listed. Compact POP and single receptacle devices are not CSA listed

Designed for Easy Installation and Protection

- Panels come from the factory completely assembled, prewired with 100 percent copper wire and tested...ready for easy installation
- Door swings up and open for user convenience and ease of access to breakers and receptacles
- Panels can be bottom fed through knockouts in the endwall or top fed using a bolt-on raintight hub
- Two-piece deadfront cover allows field wiring without interfering with factory wiring
- Lower deadfront cover permits easy field wiring to circuit protective devices
- Available GFI (ground fault interrupter) single- and two-pole protection through 50 A

Two Styles to Meet Your Power Outlet Needs

- **Surface mount:** User mounts unit to a post
- **Pedestal mount:** User mounts with an underground pedestal extension or pad-mounting bracket. (Underground pedestal extension and pad-mounting bracket are sold separately. See accessories **Page V1-T5-7** for part numbers and options)

Compact Design Available in Certain Configurations for Added Convenience

Standards and Certifications

- UL Standard 231
- UL File Number E163588

Receptacles conform to NEMA and/or ANSI configurations as specified by the NEC.

Standard Compliance

All power outlet panels for temporary construction site power and RV (recreational vehicle) application shall be UL listed for the U.S. per UL Standard 231, File E163588. Receptacles shall conform to NEMA and/or ANSI configurations as specified by the National Electrical Code (NEC).

Listed

Surface Units

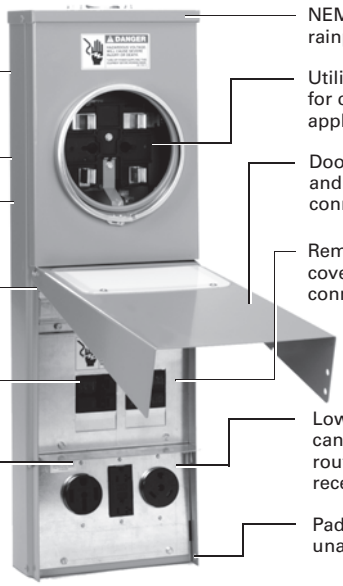

- 100 percent galvanized steel with baked-on polyester powder coating
- Three-point mounting
- One-piece case back for metered and unmetered panels
- Lighted option for site location and nighttime panel operations
- GFI circuit breakers available through 50 A
- Unique steel barrier prevents unauthorized operation of breakers when door is closed and padlocked
- NEMA 3R construction for rainproof installation
- Utility grade metering available for construction site or RV park applications
- Door swings up when opening and allows cords to remain connected when closed.
- Removable upper deadfront cover for easy incoming wire connections to breaker terminals
- Lower deadfront cover can be removed for easy routing of incoming wires or receptacle changeouts
- Padlock provisions to prevent unauthorized entry

- **Metered units available with meter on top or on bottom**
- **Units are factory wired and assembled**

Pedestal Units

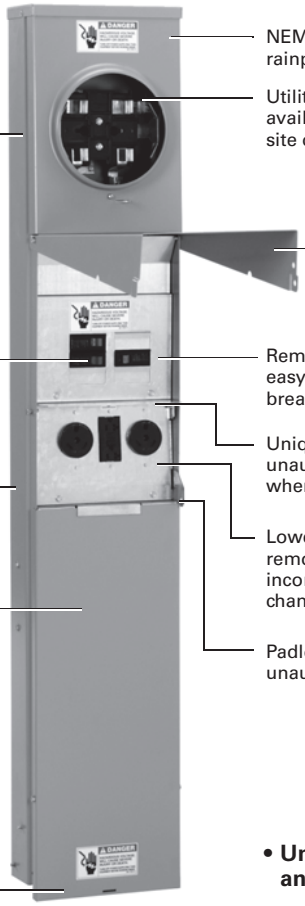

- 100 percent galvanized steel with baked-on polyester powder coating
- GFI circuit breakers (single- and two-pole) available through 50 A
- One-piece case back for metered and unmetered panels
- Loop-feed lug assembly with 350 kcmil lugs included as standard
- Pedestal extension available for underground services
- Pad-mounted bracket option also available
- NEMA 3R construction for rainproof installation
- Utility grade metering available for construction site or RV park applications
- Door swings up when opening and allows cords to remain connected when closed
- Removable upper deadfront cover for easy incoming wire connections to breaker terminals
- Unique steel barrier prevents unauthorized operation of breakers when door is closed and padlocked
- Lower deadfront cover can be removed for easy routing of incoming wires or receptacle changeouts
- Padlock provisions to prevent unauthorized entry

- **Units are factory wired and assembled**

Catalog Number Selection

C H M 1 N 7 N 4 N P X L T Z U

Eaton's Cutler-Hammer® Series

Metering Type
- **U** = Unmetered
- **M** = Metered-ring
- **R** = Metered-ringless

Receptacle Type Left Position ①

1 = NEMA 14-50R	**A** = NEMA L14-50R
2 = NEMA 5-20R2 ②	**B** = NEMA L6-50R
3 = NEMA 14-30R	**C** = NEMA L5-50R
4 = NEMA TT-30R	**D** = NEMA L14-30R
5 = NEMA 6-20R2	**E** = NEMA L6-30R
6 = NEMA 5-20R2	**F** = NEMA L5-30R
7 = NEMA 5-20R2GFI	**H** = NEMA L6-20R
8 = NEMA 5-20R2GFI ②	**J** = NEMA L5-20R
9 = NEMA 5-20R2GFI ③	**Blank** = No receptacle
K = NEMA 6-20R2 ②	

Receptacle Type Center Position ①
- See "**Receptacle Type Left Position**" for code selection

Receptacle Type Right Position ①
- See "**Receptacle Type Left Position**" for code selection

Circuit Breaker Type Position 2
- **N** = Non-ground fault
- **G** = Ground fault

Circuit Breaker Type Position 3
- **N** = Non-ground fault
- **G** = Ground fault

Circuit Breaker Type Position 1
- **N** = Non-ground fault
- **G** = Ground fault

Mounting
- **S** = Surface
- **P** = Pedestal
- **B** = Back-to-back pedestal

Interior
- **X** = Six circuit
- **Blank** = Standard Four circuit

Lighting
- **L** = Lighted

Pedestal Extension
- **TZ**= Factory installed pedestal extension with lay-in ground lug

Meter Location (for Metered Devices Only)
- **U** = Bottom location
- **Blank** = Top location

Notes

① For receptacle configurations, see **table below**.

② Weather-resistant.

③ Weather-resistant/tamper resistant.

Receptacle Configuration

1		50 A, 125/250 V, three-pole, four-wire, **NEMA 14-50R** Two-pole, 50 A breaker	**4**		30 A, 125 V, two-pole, three-wire, **NEMA TT-30R** Single-pole, 30 A breaker	**7**		20 A, 125 V, two-pole, three-wire, **NEMA 5-20R2GFI** Single-pole, 20 A breaker
2		20 A, 125 V, two-pole, three-wire, weather-resistant (WR), **NEMA 5-20R2** Single-pole, 20 A breaker	**5**		20 A, 250 V, two-pole, three-wire, **NEMA 6-20R2** Two-pole, 20 A breaker	**8**		20 A, 125 V, two-pole, three-wire, weather-resistant (WR), **NEMA 5-20R2GFI**
3		30 A, 125/250 V, three-pole, four-wire, **NEMA 14-30R** Two-pole, 30 A breaker	**6**		20 A, 125 V, two-pole, three-wire, **NEMA 5-20R2** Single-pole, 20 A breaker	**9**		20 A, 125 V, two-pole, three-wire, weather-resistant/ tamper-resistant (WR TR), **NEMA 5-20R2GFI**
						K		20 A, 250 V, two-pole, three-wire, weather-resistant (WR), **NEMA 6-20R2** Two-pole, 20 A breaker

Twist-Lock and Custom Receptacle/Breaker Combinations

A		50 A, 125/250 V, three-pole, three-wire, **NEMA L14-50R** Two-pole, 50 A breaker	**D**		30 A, 125/250 V, three-pole, four-wire, **NEMA L14-30R** Two-pole, 30 A breaker	**H**		20 A, 250 V, two-pole, three-wire, **NEMA L6-20R** Two-pole, 20 A breaker
B		50 A, 250 V, two-pole, three-wire, **NEMA L6-50R** Two-pole, 50 A breaker	**E**		30 A, 250 V, two-pole, three-wire, **NEMA L6-30R** Two-pole, 30 A breaker	**J**		20 A, 125 V, two-pole, three-wire, **NEMA L5-20R** Single-pole, 20 A breaker
C		50 A, 125 V, two-pole, three-wire, **NEMA L5-50R** Single-pole, 50 A breaker	**F**		30 A, 125 V, two-pole, three-wire, **NEMA L5-30R** Single-pole, 30 A breaker			

Product Selection

When quoting or selecting a power outlet panel, the following questions should be answered:

- Unmetered, ring or ringless style
- Number and types of receptacles (seven standard and eight twist-lock options)
- Standard or ground fault breakers
- Surface, pedestal or back-to-back mounting
- Are any factory or field options required?

Power Outlet Panel Receptacle Configuration Rules

Four Receptacles/Unit
All receptacles must be NEMA 5-20R2 or NEMA 5-20R2GFI, surface mount only.

Three Receptacles/Unit

- One or more of the receptacles must be NEMA 6-20R2, NEMA 5-20R2 or NEMA 5-20R2GFI
- NEMA 6-20R2, NEMA 5-20R2, or NEMA 5-20R2GFI must go in the second position
- If two receptacles consist of types NEMA 14-50R, NEMA 10-50R, NEMA 14-30R or NEMA 6-20R2 a six-circuit interior must be added
  - Example: **CHUIN5N2NSX**

Note: Configuration 1 and 2 were chosen so a six-circuit interior needs to be added (suffix X) to the end of the catalog number. Also, configuration 5 is in the second position.

Two, One and Zero Receptacles/Unit
Any configuration.

Accessories

Accessories

	Description	Catalog Number
Underground Pedestal Extension	Underground pedestal extension	**CHPEDEXT**
	Stainless steel underground pedestal extension	**CHPEDEXTSS**
Pad-Mount Bracket	Pad-mount bracket	**CHPADEXT**
Cable TV/Telephone Bracket	Cable TV and telephone bracket	**CHTELTV**
DS Hub	Rainproof conduit hub 0.75 inch (19.1 mm)	**DS075H1**
	Rainproof conduit hub 1.00 inch (25.4 mm)	**DS100H1**
	Rainproof conduit hub 1.25 inch (31.8 mm)	**DS125H1**
	Rainproof conduit hub 1.50 inch (38.1 mm)	**DS150H1**

Fluorescent Light Kit

Fluorescent Light Kit

Description	Catalog Number
Converts power outlet panel to lighted unit, **must also order CHOUTCVRL**	**CHFLGTKIT**

Renewal Parts

Renewal Parts

	Description	Catalog Number
Circuit Breaker (BR/GFCB)	See this volume, Tab 1, section 1.2	—
Meter Socket	Ring style replacement meter socket	**CHPOPMSRING**
	Ringless style replacement meter socket	**CHPOPMSRL**
	5th jaw kit	**ARP00035CHJ**
	Horn bypass (one lug cap per kit; four kits required per device)	**ARP00777CH**
Bonding Strap and Mounting Hardware	Bonding strap and mounting hardware	**CHBONDST**
Inner Lens	Inner lens for lighted power outlet panels	**CHINLENS**
Loop Feed Lug Assembly	Loop feed lug assembly for single pedestal	**CHLOOPFDP**
	Loop feed lug assembly for back-to-back pedestal	**CHLOOPFDB**
Lower Deadfront Cover	Blank lower deadfront cover	**CHLDFCVR**
	Lower deadfront cover with duplex receptacle opening	**CHLDFCVR1**
	Lower deadfront cover with duplex, duplex receptacle opening	**CHLDFCVR2**
	Lower deadfront cover with duplex, duplex, duplex receptacle opening	**CHLDFCVR3**
	Lower deadfront cover with rectangle receptacle opening	**CHLDFCVR4**
	Lower deadfront cover with rectangle, rectangle receptacle opening	**CHLDFCVR5**
	Lower deadfront cover with rectangle, rectangle, rectangle receptacle opening	**CHLDFCVR6**
	Lower deadfront cover with duplex, rectangle receptacle opening	**CHLDFCVR7**
	Lower deadfront cover with duplex, rectangle, duplex receptacle opening	**CHLDFCVR8**
	Lower deadfront cover with rectangle, rectangle, duplex receptacle opening	**CHLDFCVR9**
	Lower deadfront cover with round receptacle opening	**CHLDFCVR10**
	Lower deadfront cover with round, round receptacle opening	**CHLDFCVR11**
	Lower deadfront cover with round, duplex receptacle opening	**CHLDFCVR12**

Renewal Parts, continued

	Description	Catalog Number
	Lower deadfront cover with round, duplex, duplex receptacle opening	**CHLDFCVR13**
	Lower deadfront cover with round, duplex, round receptacle opening	**CHLDFCVR14**
	Lower deadfront cover with round, rectangle receptacle opening	**CHLDFCVR15**
	Lower deadfront cover with round, rectangle, rectangle receptacle opening	**CHLDFCVR16**
	Lower deadfront cover with round, rectangle, round receptacle opening	**CHLDFCVR17**
	Lower deadfront cover with round, rectangle, duplex receptacle opening	**CHLDFCVR18**
Upper Deadfront Cover	Upper deadfront cover with six breaker twistouts	**CHUDFCVR**
	Upper deadfront cover with provisions for lighted option	**CHUDFCVRL**
Outer Door	Outer door	**CHOUTCVR**
Outer Door with Lens	Outer door with lens	**CHOUTCVRL**
Neutral Assemblies	Six-hole neutral assembly with 2/0 lug	**CHNEUT**
	Seven-hole neutral assembly with 2/0 lug	**CHNEUT1**
	Five-hole ground bar kit	**GBK5**
	10-hole ground bar kit	**GBK10**
	Replacement Meter Cover	
	Replacement meter cover—ring type	**CHPOPRMC**
	Replacement meter cover—ringless	**CHPOPRLMC**
	Replacement meter cover—ringless	**CHPOPRLMCN**
	Replacement meter cover—ringless	**CHPOPRLMCN2**

Power Outlet Panels

Contents

Description	*Page*
Product Overview	**V1-T5-3**
Surface Units	
Dimensions	**V1-T5-13**
Pedestal Units	**V1-T5-16**

Surface Units

Product Overview

A power outlet panel (or POP) is a device designed for outdoor service to meet temporary power requirements at construction sites and recreation vehicle (RV) parks. POPs provide a safe and reliable means for users to access electricity at such locations.

Product Selection

Power Outlet Panel Receptacle Configuration Rules

See **Page V1-T5-7** for complete list.

Four Receptacles/Unit

All receptacles must be NEMA 5-20R2 and/or NEMA 5-20R2GFI, surface mount only.

Three Receptacles/Unit

- One or more of the receptacles must be NEMA 6-20R2, NEMA 5-20R2 or NEMA 5-20R2GFI
- NEMA 6-20R2, NEMA 5-20R2, or NEMA 5-20R2GFI must go in the second position
- If two receptacles consist of types NEMA 14-50R, NEMA 10-50R, NEMA 14-30R or NEMA 6-20R2 a six-circuit interior must be added
  - Example: **CHUIN5N2NSX**

Note: Configuration 1 and 2 were chosen so a six-circuit interior needs to be added (suffix X) to the end of the catalog number. Also, configuration 5 is in the second position.

Two, One and Zero Receptacles/Unit

Any configuration.

Options

- Six-circuit interior
- Factory-mounted pedestal extension
- Lighted
- Bottom fed

Surface Type

Single Receptacle CHU4S

Unmetered Type CHU1N7N4NS

Unmetered (Compact Version)

Ampere Series	Receptacle Description Position Left	Center	Right	Breaker Description 1st	2nd	3rd	Catalog Number
Unmetered Single Receptacle							
50	—	14-50R	—	No breaker	No breaker	No breaker	**CHU1S**
30	—	14-30 R	—	No breaker	No breaker	No breaker	**CHU3S**
30	—	TT-30R	—	No breaker	No breaker	No breaker	**CHU4S**
20	—	6-20R2	—	No breaker	No breaker	No breaker	**CHU5S**
20	—	5-20R2	—	No breaker	No breaker	No breaker	**CHU6S**
20	—	5-20R2GFI	—	No breaker	No breaker	No breaker	**CHU7S**
Unmetered							
20/20/20	5-20R2	5-20R2	6-20R2	GFI	GFI	GFI	**CHU6G6G5GS**
20/20/20	5-20R2WR	5-20R2WR	6-20R2WR	GFI	GFI	GFI	**CHU2G2GKGS**
20/20/20	5-20R2GFI	5-20R2GFI	6-20R2	Non-GFI	Non-GFI	Non-GFI	**CHU7N7N5NS**
20/20/20	5-20R2GFIWR	5-20R2GFIWR	6-20R2WR	Non-GFI	Non-GFI	Non-GFI	**CHU8N8NKNS**
20/20/20	5-20R2GFI	5-20R2GFI	6-20R2	Non-GFI	Non-GFI	GFI	**CHU7N7N5GS**
20/20/20	5-20R2GFIWR	5-20R2GFIWR	6-20R2WR	Non-GFI	Non-GFI	GFI	**CHU8N8NKGS**
50/20/30	14-50R	5-20R2GFI	TT-30R	Non-GFI	Non-GFI	Non-GFI	**CHU1N7N4NS**
50/20/30	14-50R	5-20R2GFI	6-20R	GFI	Non-GFI	Non-GFI	**CHU1G7N7NS**
50/20	14-50R	5-20RGFI	—	GFI	Non-GFI	—	**CHU1G7NS**
50/20	14-50R	5-20RGFI	—	Non-GFI	Non-GFI	—	**CHU1N7NS**
50/20/50	14-50R	5-20R2GFI	14-50R	Non-GFI	Non-GFI	Non-GFI	**CHU1N7N1NSX** ①
30/30/20	TT-30R	5-20R2GFI	TT-30R	Non-GFI	Non-GFI	Non-GFI	**CHU4N7N4NS**
20/20/20	5-20R2	5-20R2	6-20R2	GFI	GFI	GFI	**CHU6G6G5GS60M** ②
Unmetered (Compact Version)							
50	14-50R	—	—	Non-GFI	—	—	**CHU1NS**
20	5-20R2	—	—	Non-GFI	—	—	**CHU2NS**
30	TT-30R	—	—	GFI	—	—	**CHU4GS**
30/30	TT-30R	TT-30R	—	Non-GFI	Non-GFI	—	**CHU4N4NS**
30/20	TT-30R	5-20R2	—	Non-GFI	Non-GFI	—	**CHU4N6NS**
30/20	TT-30R	5-20R2GFI	—	Non-GFI	Non-GFI	—	**CHU4N7NS**
30	TT-30R	—	—	Non-GFI	—	—	**CHU4NS**
20	6-20R2	—	—	GFI	—	—	**CHU5GS**
20/20	5-20R2	5-20R2	—	GFI	GFI	—	**CHU6G6GS**
20	5-20R2	—	—	GFI	—	—	**CHU6GS**
20/20	5-20R2	5-20R2	—	Non-GFI	Non-GFI	—	**CHU6N6NS**
20	5-20R2	—	—	Non-GFI	—	—	**CHU6NS**
20/20	5-20R2GFI	5-20R2GFI	—	Non-GFI	Non-GFI	—	**CHU7N7NS**
20	5-20R2GFI	—	—	Non-GFI	—	—	**CHU7NS**

Notes

① The "X" suffix indicates that a six circuit interior is provided, instead of the standard four circuit interior.

② Includes 60 A two-pole main breaker for service disconnect ratings.

Contact your local Eaton sales office for configurations not listed.

Surface Type, continued

Metered Ring CHM1G7NS

Metered Ringless Type CHR4N7NS

Metered Ring or Ringless Type Bottom Feed

Ampere Series	Receptacle Description Position Left	Center	Right	Breaker Description 1st	2nd	3rd	Catalog Number
Metered—Ring							
50/20/20	14-50R	5-20R2GFI	5-20R2GFI	GFI	Non-GFI	Non-GFI	**CHM1G7N7NS**
20/20	5-20R2GFI	5-20R2GFI	—	Non-GFI	Non-GFI	—	**CHM7N7NS**
20/20/20	5-20R2GFI	5-20R2GFI	6-20R2	Non-GFI	Non-GFI	GFI	**CHM7N7N5GS**
20/20/20	5-20R2GFI	5-20R2GFI	6-20R2	Non-GFI	Non-GFI	Non-GFI	**CHM7N7N5NS**
50/30/20	14-50R	5-20R2GFI	TT-30R	Non-GFI	Non-GFI	Non-GFI	**CHM1N7N4NS**
50/20	14-50R	5-20R2GFI	—	Non-GFI	Non-GFI	—	**CHM1N7NS**
20/20	6-20R2	5-20R2GFI	—	Non-GFI	Non-GFI	Non-GFI	**CHM5N7NS**
Metered—Ringless							
50/20	14-50R	5-20R2GFI	—	GFI	Non-GFI	—	**CHR1G7NS**
20/20	5-20R2GFI	5-20R2GFI	—	Non-GFI	Non-GFI	—	**CHR7N7NS**
50/20/20	14-50R	5-20R2GFI	5-20R2GFI	GFI	Non-GFI	Non-GFI	**CHR1G7N7NS**
50/20	14-50R	5-20R2GFI	—	Non-GFI	Non-GFI	—	**CHR1N7NS**
20/20/20	5-20R2GFI	5-20R2GFI	5-20R2GFI	Non-GFI	Non-GFI	Non-GFI	**CHR7N7N7NS**
20/20/20	5-20R2WR	5-20R2WR	6-20R2WR	GFI	GFI	GFI	**CHR2G2GKGS**
30/20/20	14-30R	5-20R2GFI	5-20R2GFI	Non-GFI	Non-GFI	Non-GFI	**CHR3N7N7NS**
50/30/20	14-50R	5-20R2GFI	TT-30R	Non-GFI	Non-GFI	Non-GFI	**CHR1N7N4NS**
Metered—Ring—Bottom Fed							
20/20	5-20R2GFI	5-20R2GFI	—	Non-GFI	Non-GFI	—	**CHM7N7NSU**
20/20/20	5-20R2GFI	5-20R2GFI	6-20R2	Non-GFI	Non-GFI	GFI	**CHM7N7N5GSU**
50/20/20	14-50R	5-20R2GFI	5-20R2GFI	GFI	Non-GFI	Non-GFI	**CHM1G7N7NSU**
Metered—Ringless—Bottom Fed							
20/20	5-20R2GFI	5-20R2GFI	—	Non-GFI	Non-GFI	—	**CHR7N7NSU**
50/20	14-50R	5-20R2GFI	—	GFI	Non-GFI	—	**CHR1G7NSU**
50/20	10-50R	5-20R2GFI	—	GFI	Non-GFI	—	**CHR2G7NSU**
20/20/20	5-20R2WR	5-20R2WR	6-20R2WR	GFI	GFI	GFI	**CHR2G2GKGSU**
20/20/20	5-20R2GFI	5-20R2GFI	6-20R2	Non-GFI	Non-GFI	GFI	**CHR7N7N5GSU**
20/20/20	5-20R2GFI	5-20R2GFI	6-20R2	Non-GFI	Non-GFI	Non-GFI	**CHR7N7N5NSU**
20/20/20	5-20R2GFI	5-20R2GFI	5-20R2GFI	Non-GFI	Non-GFI	Non-GFI	**CHR7N7N7NSU**
30/20/20	14-30R	5-20R2GFI	5-20R2GFI	Non-GFI	Non-GFI	Non-GFI	**CHR3N7N7NSU**
30/20/20	14-30R	5-20R2GFI	5-20R2GFI	GFI	Non-GFI	Non-GFI	**CHR3G7N7NSU**
50/20/20	14-50R	5-20R2GFI	5-20R2GFI	GFI	Non-GFI	Non-GFI	**CHR1G7N7NSU**
50/20/30	14-50R	5-20R2GFI	TT-30R	Non-GFI	Non-GFI	Non-GFI	**CHR1N7N4NSU**

Accessories

See **Page V1-T5-7**.

Dimensions

Approximate Dimensions in Inches (mm)

Single Receptacle

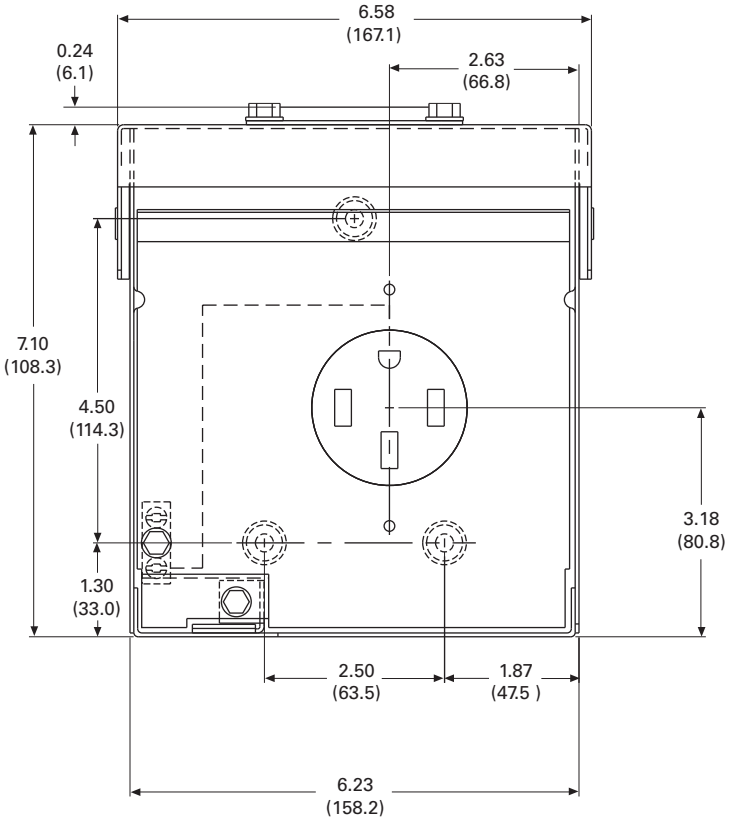

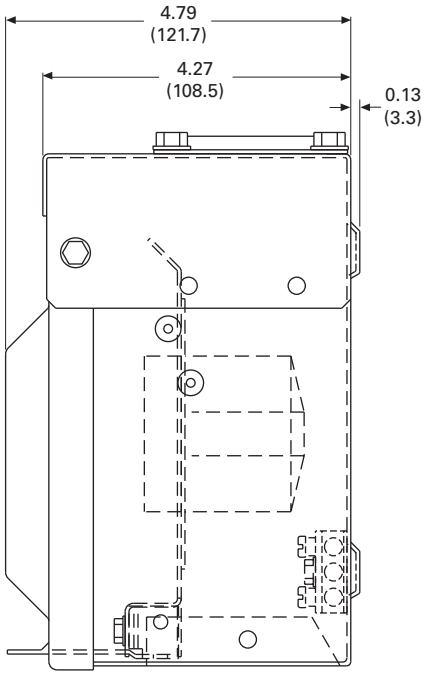

Approximate Dimensions in Inches (mm)

Compact Design Option

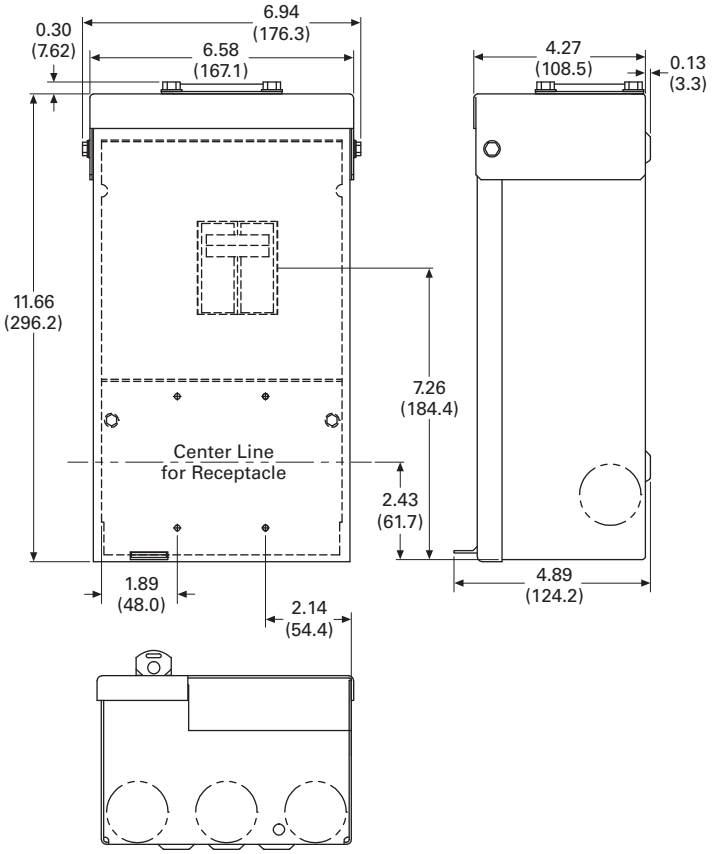

Unmetered Units

Unmetered Surface Type

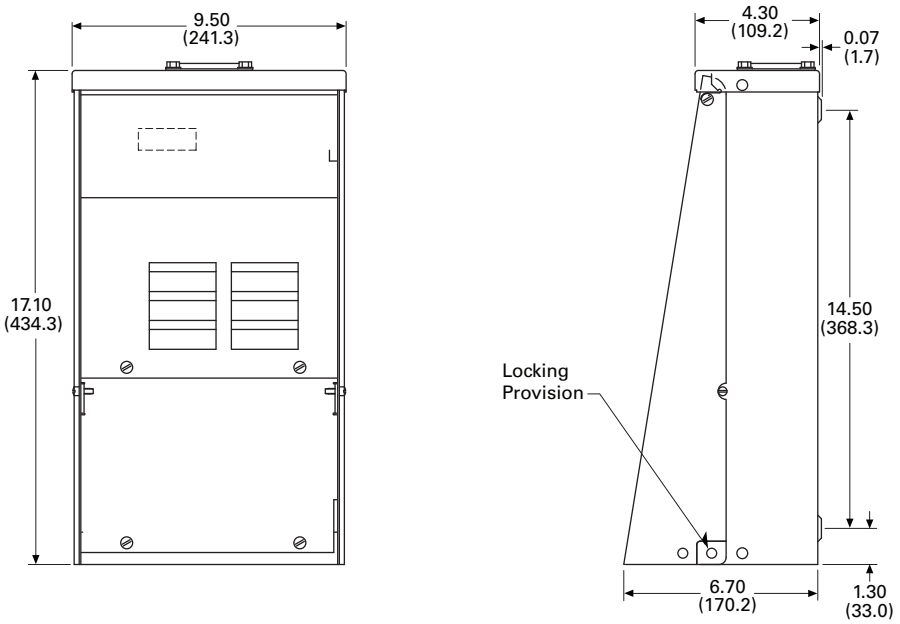

Approximate Dimensions in Inches (mm)

Metered Units (Ring and Ringless)

Metered Surface Type

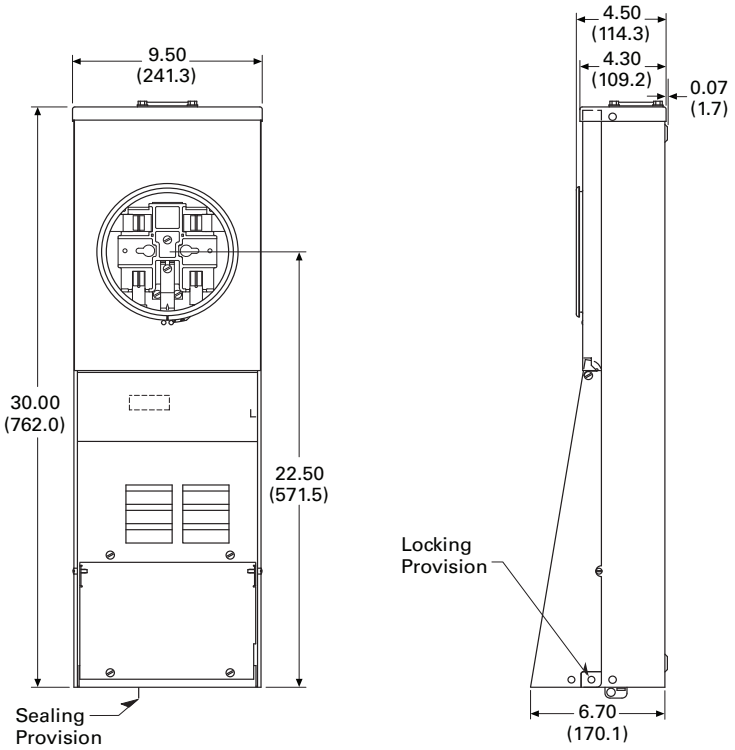

Bottom Fed Type

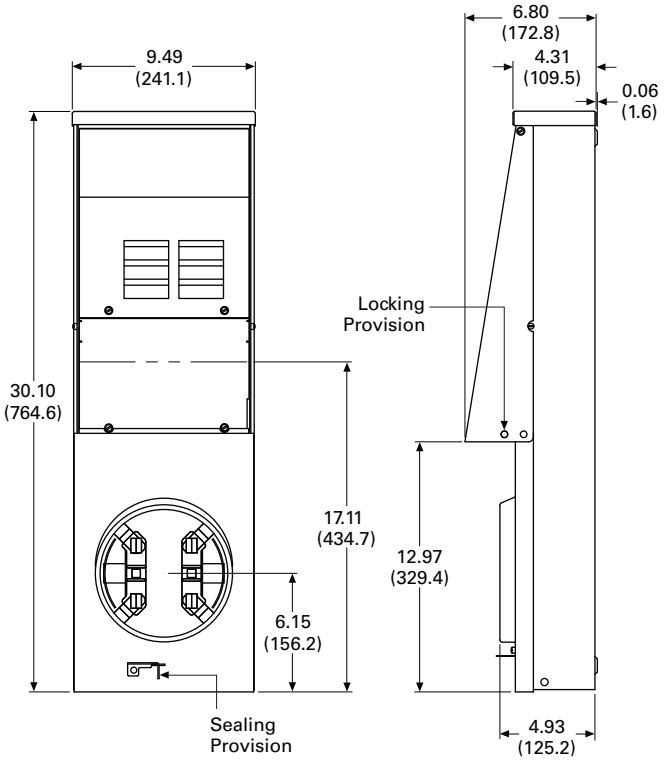

Power Outlet Panels

Contents

Description	*Page*
Product Overview	**V1-T5-3**
Surface Units	**V1-T5-10**
Pedestal Units	**V1-T5-16**
Dimensions	**V1-T5-18**

Pedestal Units

Product Overview

A power outlet panel (or POP) is a device designed for outdoor service to meet temporary power requirements at construction sites and recreation vehicle (RV) parks. POPs provide a safe and reliable means for users to access electricity at such locations.

Product Selection

Power Outlet Panel Receptacle Configuration Rules

See **Page V1-T5-7** for complete list.

Four Receptacles/Unit

All receptacles must be NEMA 5-20R2 and/or NEMA 5-20R2GFI, surface mount only.

Three Receptacles/Unit

- One or more of the receptacles must be NEMA 6-20R2, NEMA 5-20R2 or NEMA 5-20R2GFI
- NEMA 6-20R2, NEMA 5-20R2, or NEMA 5-20R2GFI must go in the second position
- If two receptacles consist of types NEMA 14-50R, NEMA 10-50R, NEMA 14-30R or NEMA 6-20R2 a six-circuit interior must be added
  - Example: **CHUIN5N2NSX**

Note: Configuration 1 and 2 were chosen so a six-circuit interior needs to be added (suffix X) to the end of the catalog number. Also, configuration 5 is in the second position.

Two, One and Zero Receptacles/Unit

Any configuration.

Options

- Six-circuit interior
- Factory-mounted pedestal extension
- Lighted
- Bottom fed

Unmetered Type

CHM1N7N4NPTZ

Pedestal Type

Ampere Series	Receptacle Description Position Left	Center	Right	Breaker Description 1st	2nd	3rd	Catalog Number
Unmetered							
50/30/20	14-50R	5-20R2GFI	TT-30R	Non-GFI	Non-GFI	Non-GFI	**CHU1N7N4NP**
30/20	TT-30R	5-20R2GFI	—	Non-GFI	Non-GFI	—	**CHU4N7NP**
50/30/20	14-50R	5-20R2GFI	TT-30R	Non-GFI	Non-GFI	Non-GFI	**CHU1N7N4NPTZ**
30/30/20	TT-30R	5-20R2GFI	TT-30R	Non-GFI	Non-GFI	Non-GFI	**CHU4N7N4NP**
30/20	TT-30R	5-20R2GFI	—	Non-GFI	Non-GFI	—	**CHU4N7NPTZ**
Metered—Ring							
50/30/20	14-50R	5-20R2GFI	TT-30R	Non-GFI	Non-GFI	Non-GFI	**CHM1N7N4NP**
50/20	14-50R	5-20R2GFI	—	Non-GFI	Non-GFI	—	**CHM1N7NP**
50/30/20	14-50R	5-20R2GFI	TT-30R	Non-GFI	Non-GFI	Non-GFI	**CHM1N7N4NPTZ**
30/20	TT-30R	5-20R2GFI	—	Non-GFI	Non-GFI	—	**CHM4N7NPTZ**
Metered—Ringless							
50/30/20	14-50R	5-20R2GFI	TT-30R	Non-GFI	Non-GFI	Non-GFI	**CHR1N7N4NP**
50/20/50	14-50R	5-20R2GFI	14-50R	Non-GFI	Non-GFI	Non-GFI	**CHR1N7N1NPX**
50/20/30	14-50R	5-20R2GFI	14-30R	Non-GFI	Non-GFI	Non-GFI	**CHR1N7N3NPX**
50/20/30	14-50R	5-20R2	14-30R	Non-GFI	Ground fault	Non-GFI	**CHR1N6G3NPX**

CHU1N7N4NBTZ

Back-to-Back Pedestal Type

Ampere Series	Receptacle Description Position Left	Center	Right	Breaker Description 1st	2nd	3rd	Catalog Number
Unmetered ①							
30/30/20	TT-30R	5-20R2GFI	TT-30R	Non-GFI	Non-GFI	Non-GFI	**CHU4N7N4NB**
50/30/20	14-50R	5-20R2GFI	TT-30R	Non-GFI	Non-GFI	Non-GFI	**CHU1N7N4NBTZ**
Metered—Ring ①							
30/20	TT-30R	5-20R2GFI	—	Non-GFI	Non-GFI	—	**CHM4N7NB**
50/30/20	14-50R	5-20R2GFI	TT-30R	Non-GFI	Non-GFI	Non-GFI	**CHM1N7N4NB**
Metered—Ringless ①							
50/30/20	14-50R	5-20R2GFI	TT-30R	Non-GFI	Non-GFI	Non-GFI	**CHR1N7N4NBTZ**

Notes

① The pedestal back-to-back units have receptacles and circuit breakers as shown for each panel and share one common pedestal with loop feed lugs. Contact your local Eaton sales office for configurations not listed.

Accessories

See **Page V1-T5-7**.

Dimensions

Approximate Dimensions in Inches (mm)

Metered Units

100 A Pedestal

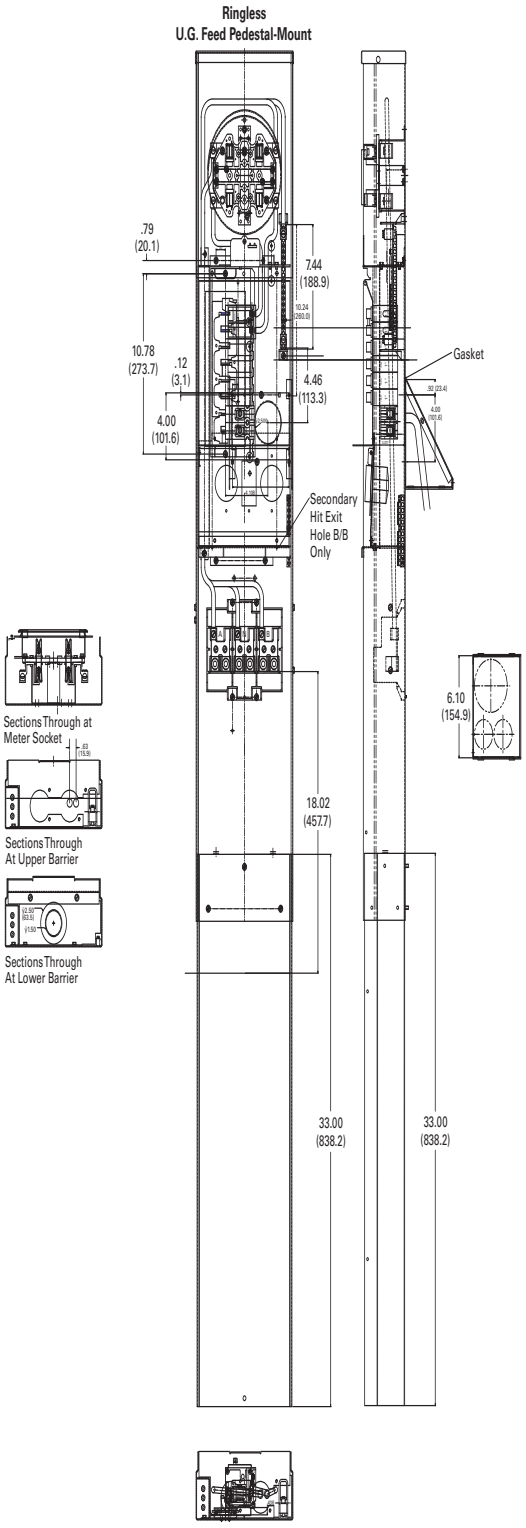

Approximate Dimensions in Inches (mm)

Metered Units (Ring and Ringless)

Metered Back-to-Back Pedestal Type

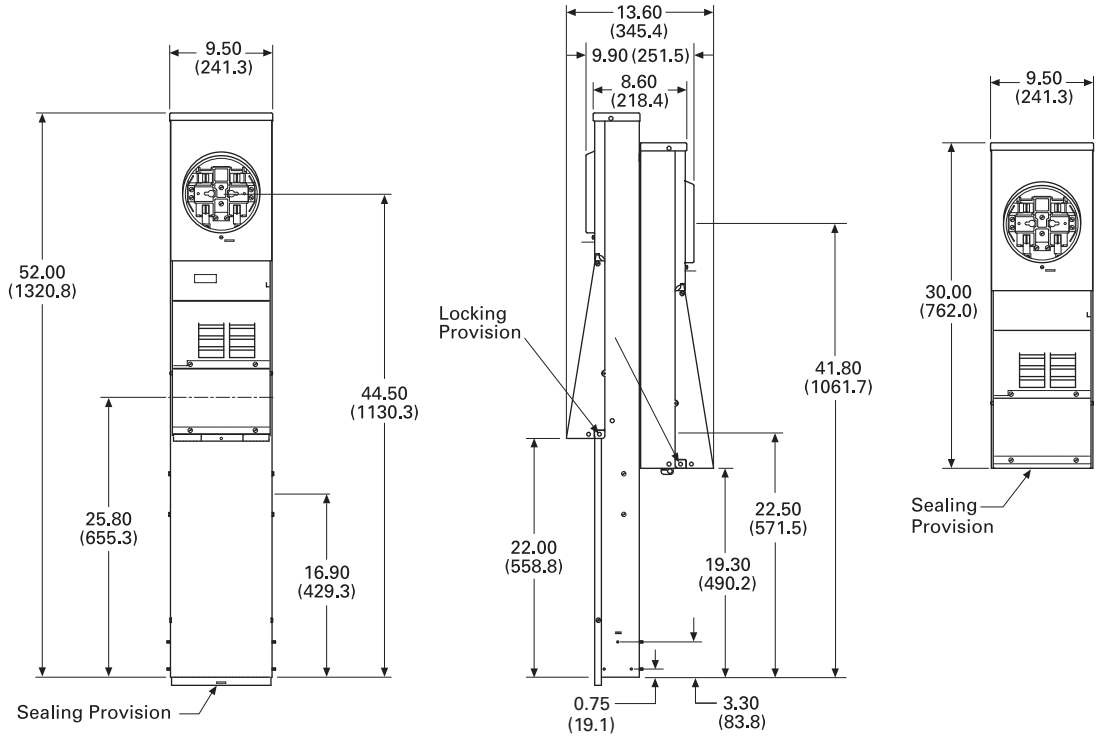

Bottom Fed Type

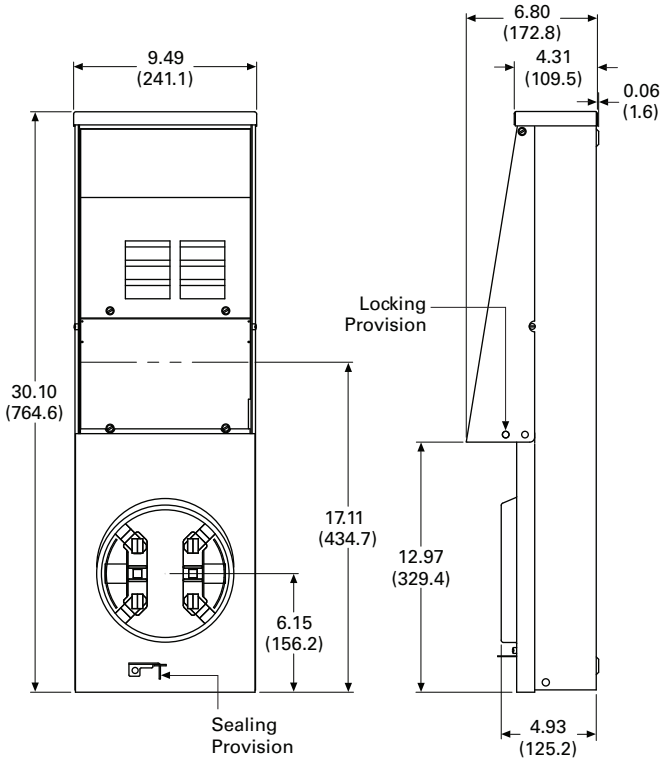

Approximate Dimensions in Inches (mm)

Unmetered Back-to-Back Pedestal Type

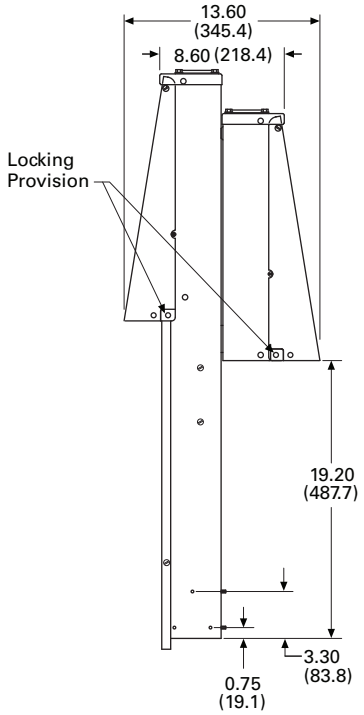

Unmetered Pedestal Type

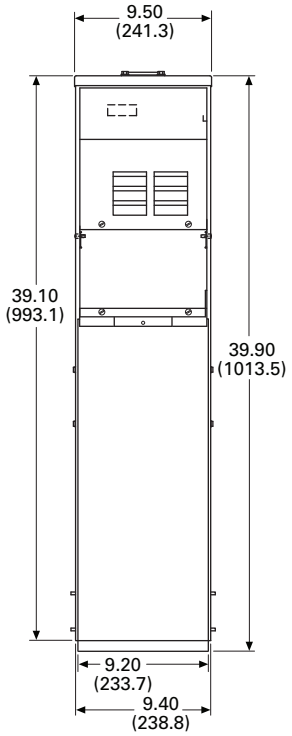

Metered Pedestal Type

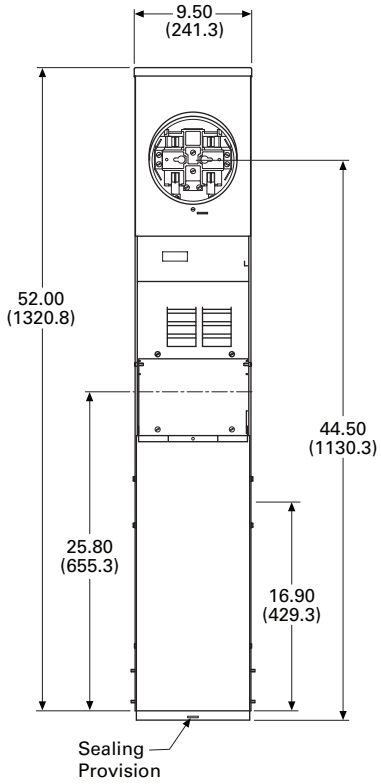

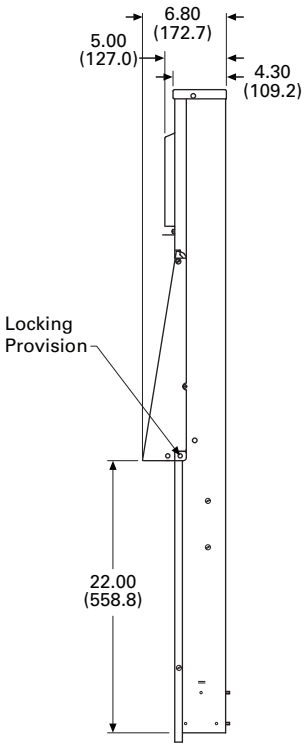

Power Outlet Panels

Contents

Description	*Page*
Mobile Home Panels	
Catalog Number Selection	**V1-T5-22**
Product Selection	**V1-T5-22**
Accessories	**V1-T5-23**
Dimensions	**V1-T5-24**

Product Overview

Eaton's versatile Mobile Home Panels have a user-friendly design that allows for a faster, cleaner installation.

100 and 200 A panels come complete with the main breaker and a 4/8 or 8/16 interior, respectively. The 200 A units are designed with ample width to ensure plenty of room for wire bending and an easier installation.

Receptacle Deadfront Kits

Optional receptacle deadfront kits enable the field installation of contractor supplied receptacles and breakers that can supply power for a variety of applications including:

- Visiting RVs
- Temporary power
- Lawn equipment
- Air compressors
- Anything else that requires cord-connected power

Features

Fastenerless Socket Design

- Eliminates overheating caused by loose socket connections

Pedestal Unit

- Convenient and sturdy ground mounting
- Loop feed feature allows several units to be connected in series

Easier, Better and Faster Installation

- More wire bending and viewing room
- Additional circuits mean more flexibility

Catalog Number Selection

Mobile Home Panels

MH M 100 P 1 N 4 N

Type
MH = Mobile Home Panel

Metering Type
M = Metered-ring
R = Metered-ringless

Amperes
100
150
200

Mounting
P = Pedestal
B = Back-to-back

Optional Receptacle Type Position 1
1 = NEMA 14-50R
3 = NEMA 14-30R
4 = NEMA TT-30R
5 = NEMA 6-20R2
6 = NEMA 5-20R2
7 = NEMA 5-20R2GFI
8 = NEMA 5-20R2GFI (WR)
9 = NEMA 5-20R2GFI (WR/TR)
Blank = No receptacle

Circuit Breaker Type Position 1
N = Non-ground fault
G = Ground fault

Optional Receptacle Type Position 2
1 = NEMA 14-50R
3 = NEMA 14-30R
4 = NEMA TT-30R
5 = NEMA 6-20R2
6 = NEMA 5-20R2
7 = NEMA 5-20R2GFI
8 = NEMA 5-20R2GFI (WR)
9 = NEMA 5-20R2GFI (WR/TR)
Blank = No receptacle

Circuit Breaker Type Position 2
N = Non-ground fault
G = Ground fault

Product Selection

Mobile Home Panel

Mobile Home Panels ①

Amperes	Security	Interior	Main	Branch Breakers	Mounting	Receptacles	Catalog Number
100	Ring	4/8	**BR2100**	BR	Pedestal	None	**MHM100P**
100	Ring	4/8	**BR2100**	BR	Back-to-back	None	**MHM100B**
100	Ringless	4/8	**BR2100**	BR	Pedestal	None	**MHR100P**
100	Ringless	4/8	**BR2100**	BR	Back-to-back	None	**MHR100B**
150	Ring	8/16	**CSR2150**	BR	Pedestal	None	**MHM150P**
150	Ring	8/16	**CSR2150**	BR	Back-to-back	None	**MHM150B**
150	Ringless	8/16	**CSR2150**	BR	Pedestal	None	**MHR150P**
150	Ringless	8/16	**CSR2150**	BR	Back-to-back	None	**MHR150B**
200	Ring	8/16	**CSR2200**	BR	Pedestal	None	**MHM200P**
200	Ring	8/16	**CSR2200**	BR	Back-to-back	None	**MHM200B**
200	Ringless	8/16	**CSR2200**	BR	Pedestal	None	**MHR200P**
200	Ringless	8/16	**CSR2200**	BR	Back-to-back	None	**MHR200B**
200	Ringless	8/16	**CSR2200**	BR	Pedestal	Qty 1 14-50R Qty 2 TT-30R	**MHM200P1N4N4N**

Note
① Pedestal Extension included with Mobile Home Panels.

Mobile Home Panel Deadfronts for 200 A Units ①

Available Receptacle Deadfront Kits—Receptacles and Breakers Not Included

MHDX

MHDXX

MHDBLANK

MHDZ

MHDZZ

MHDZZZ

MHDZZZZ

MHDY

MHDYY

MHDYYY

MHDYYYY

MHDXZX

MHDZZY

MHDYZ

MHDYZY

MHDXYX

MHDXYY

MHDXY

MHDXZY

MHDXZ

MHDXZZ

Accessories

Mobile Home Panels

Hubs not used on mobile home panels.

Description	Amperes	Catalog Number
Direct feed kit	—	**MHDFK**
Pedestal extension	200	**MHPEDEXT**
Stainless steel pedestal extension	200	**MHPEDEXTSS**
Padmount adapter	200	**MHPADEXT**
Pedestal extension	100	**CHPEDEXT100**
Stainless steel pedestal extension	100	**CHPEDESTSS100**
Padmount adapter	100	**CHPADEXT100**

Note

① For 100 A units, the accessory Catalog Number would be MHD1____. For example, to order a deadfront to accept one 30 A receptacle (round) in a 100 ampere device, the Catalog Number would be MHD1X.

Dimensions

Approximate Dimensions in Inches (mm)

Mobile Home Panel—Ringless—Pedestal Mounting

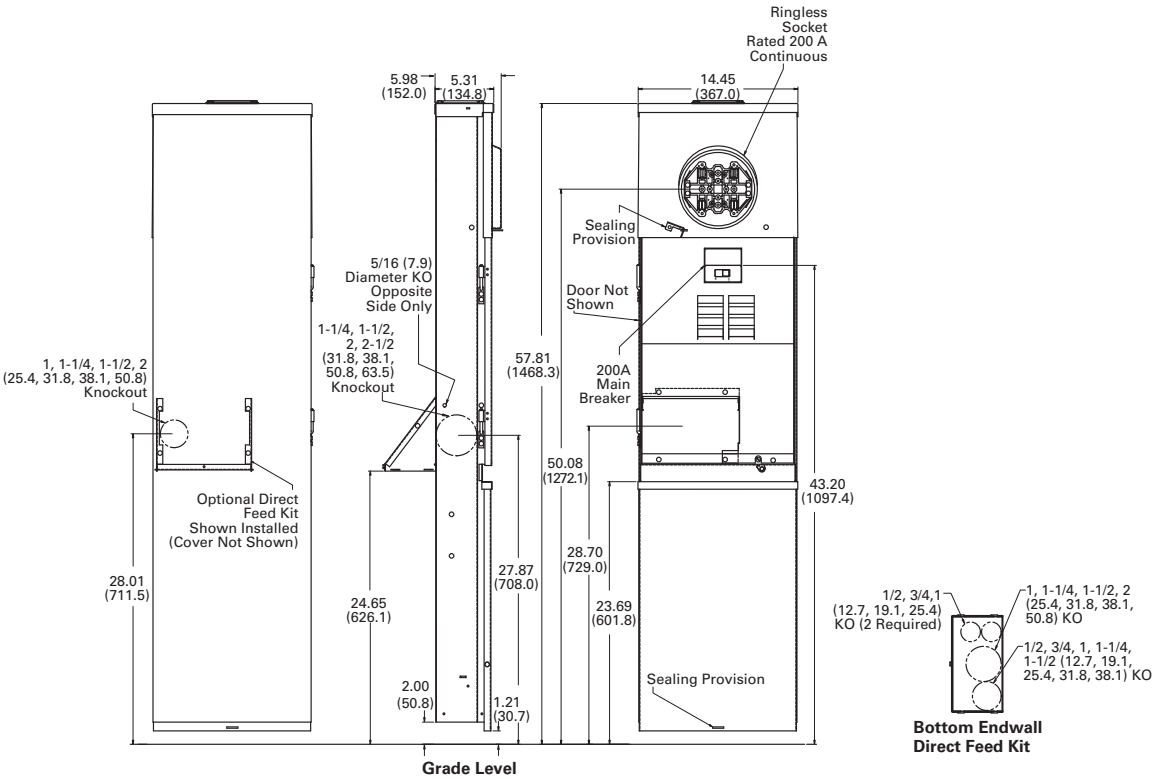

Approximate Dimensions in Inches (mm)

Mobile Home Panel—Ringless—Back-to-Back Mounting

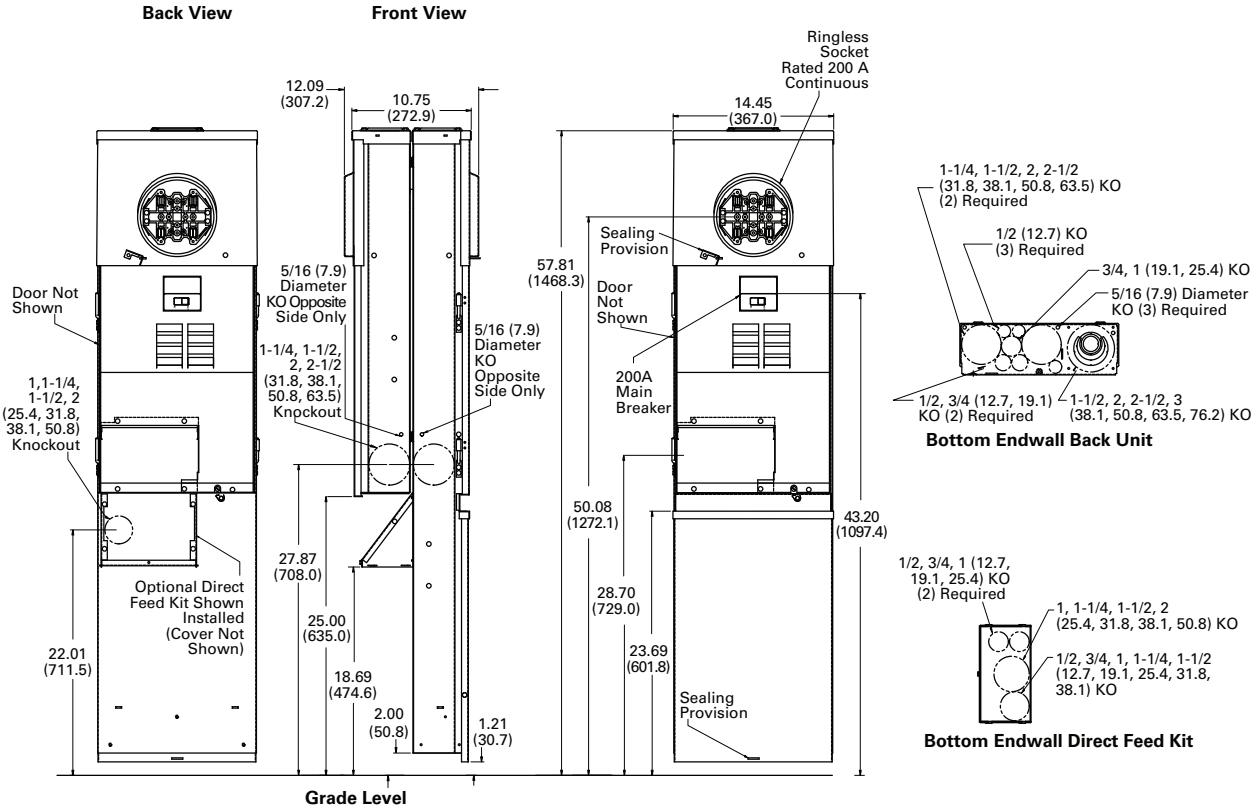

Approximate Dimensions in Inches (mm)

Mobile Home Panel—Ring—Pedestal Mounting

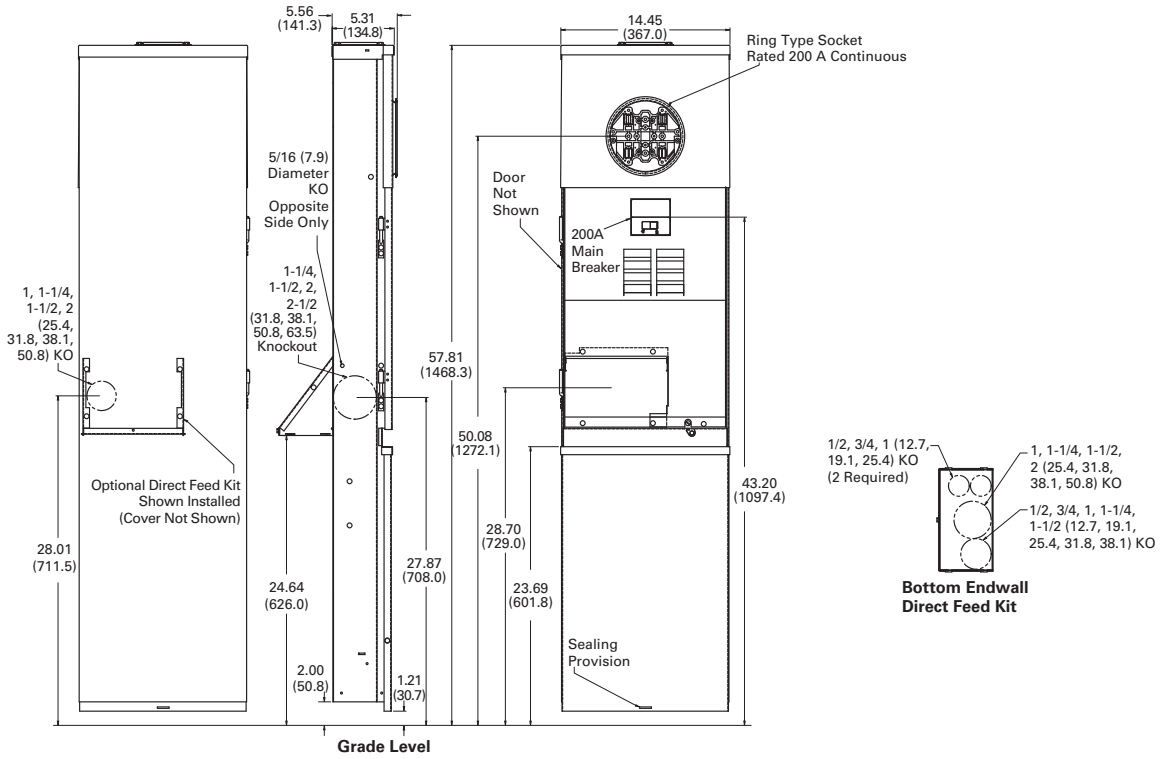

Approximate Dimensions in Inches (mm)

Mobile Home Panel—Ring—Back-to-Back Mounting

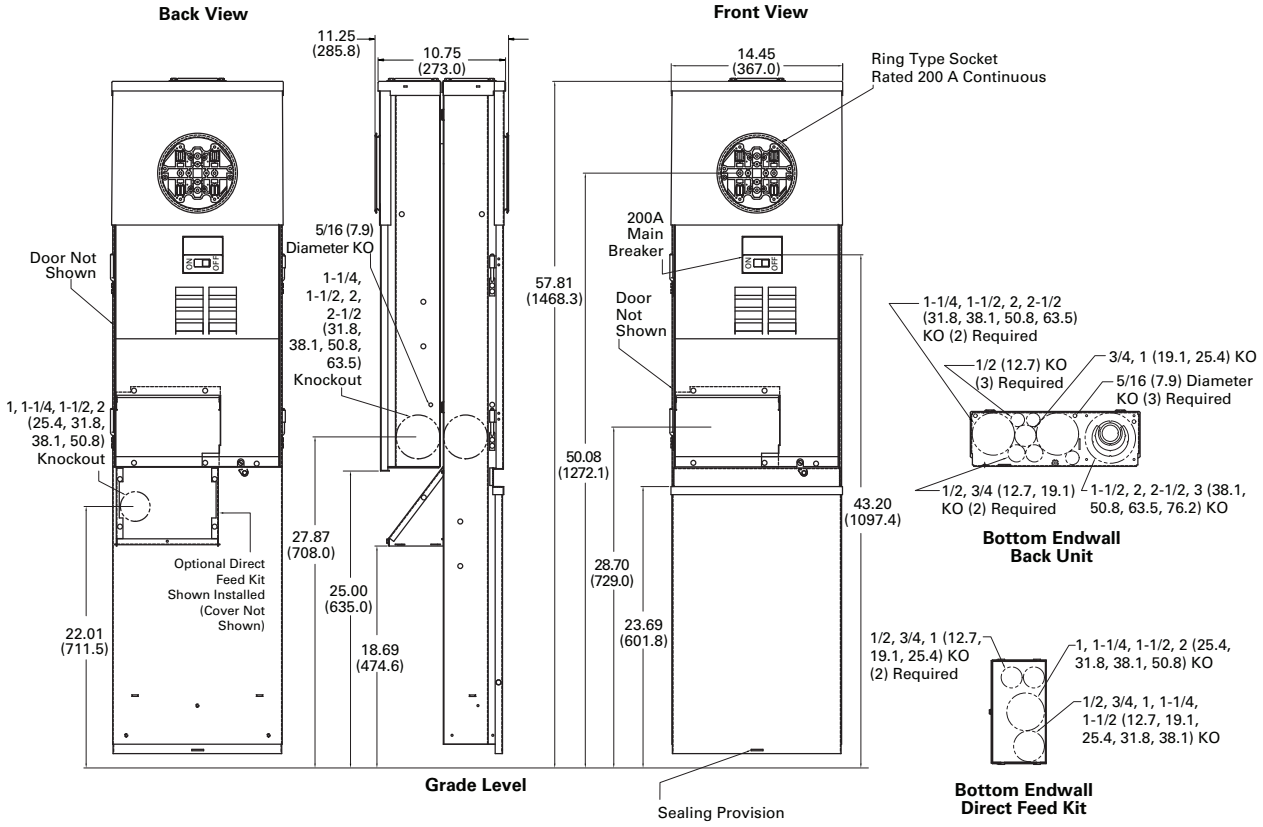

Recreational Vehicle/Campground Products

High-Quality, Weatherproof Electrical Equipment

Contents

Description

Power Pedestals
Product Selection Guide **V1-T5-29**
Powerhouse Power Pedestal **V1-T5-30**
Powerhouse—Stainless Steel (SS) Power Pedestal **V1-T5-33**
Newport Camp Mate Power Pedestal **V1-T5-36**
Park Light Power Pedestal **V1-T5-39**
Firehouse **V1-T5-42**
Digital Electronic Kilowatthour Meters **V1-T5-44**
Distribution Equipment—Ground Fault Monitor . . **V1-T5-45**
Distribution Equipment—Substations. **V1-T5-46**
Distribution Equipment—Panels. **V1-T5-49**
Distribution Equipment—Transformers. **V1-T5-50**

Power Pedestals

Product Overview

On March 24, 2006, RV Park Hook-Ups® joined together with Eaton to provide unmatched products and services in the recreational vehicle industry, as well as the marina industry. Known as the leader in electrical control, power distribution, and industrial automation products and services, Eaton is a quality driven company that constantly looks for ways to provide enhanced products and service solutions for their customers. Eaton will be able to provide RV park developers a complete electrical solution. For more information on the other products available from Eaton, visit us online at www.eaton.com or www.rvparkhookups.com

What Eaton has to Offer

- Complementary comprehensive in-house electrical designs for your complete RV or marina development
- RV and marina power pedestals
- Custom substations
- Transformers
- Panels
- Wire
- Digital electronic meters
- Receptacles and breakers
- Specialized electrical parts and equipment

Product Selection Guide

Power Receptacles

Power Outlets			Maximum GFI			
Side One	**Side Two**	**Phase**	**Powerhouse**	**Powerhouse–SS**	**Newport Camp Mate**	**Park Light**
None	None	1	2	2	2	2
30–20	00	1	2	2	1	1
30–20	30–20	1	2	2	—	—
30–30–20	30–30–20	1	2	2	—	—
30–20	50–20	1	2	2	—	—
30–30–20	50–20	1	2	2	—	—
30–30–20	30–50–20	1	2	2	—	—
30–30–20	50–50–20	1	2	2	—	—
30–50–20	30–50–20	1	2	2	—	—
30–50–20	50–50–20	1	2	2	—	—
50–20	None	1	2	2	—	—
50–20	50–20	1	2	2	—	—
50–50–20	50–20	1	2	2	—	—
50–50–20	50–50–20	1	2	2	—	—
30–50–20	None	1	2	2	0	—

Powerhouse Power Pedestal

Contents

Description	*Page*
Power Pedestals	**V1-T5-28**
Powerhouse Power Pedestal	
Standards and Certifications	**V1-T5-31**
Catalog Number Selection	**V1-T5-31**
Accessories	**V1-T5-32**
Dimensions	**V1-T5-32**
Powerhouse—Stainless Steel (SS) Power Pedestal	**V1-T5-33**
Newport Camp Mate Power Pedestal	**V1-T5-36**
Park Light Power Pedestal	**V1-T5-39**
Firehouse	**V1-T5-42**
Digital Electronic Kilowatthour Meters	**V1-T5-44**
Distribution Equipment—Ground Fault Monitor	**V1-T5-45**
Distribution Equipment—Substations	**V1-T5-46**
Distribution Equipment—Panels	**V1-T5-49**
Distribution Equipment—Transformers	**V1-T5-50**

Powerhouse Power Pedestal

Product Description

The Powerhouse® RV utility center is our most popular pedestal for single or double RV sites because of its full complement of standard features and available option packages able to meet any user requirement. The housing is made of durable weatherproof engineered resin and will never rust or deteriorate.

That's why it comes with a limited lifetime warranty. Since the Powerhouse can accommodate two RV sites, it's an economical pedestal for double site installation. This unit is ideal for new, or when retrofitting, full-service RV parks.

Features

- Photocell controlled 13 watt fluorescent light with amber lens
- Lockable weatherproof doors that protect receptacles and breakers
- Hose and cable brackets
- Engineered resin housing with a two-part polyurethane coating for a UV-resistant, long-lasting finish
- Limited lifetime warranty on the housing
- Loop-feed mechanical busbars that can accept up to 250 kcmil wire
- Hinged pedestal base providing easy access for installation and maintenance

Surge Protection

SurgeTrap is designed to protect electrical and electronic loads from transients and surge disturbances on your AC power line, such as voltage surges, spikes and lighting. The SurgeTrap has a lifetime warranty where Eaton will replace the SurgeTrap device at no charge.

- 175 kA maximum surge current
- 3500 joules
- Type 3R enclosure
- Comes with a protection working indicator light
- Factory installed integral to pedestal or available for retrofit

Available Options

- Clear lens
- Photocell controlled single or dual 7 watt or 13 watt fluorescent light
- Telephone (RJ-11) for each side
- Cable TV for each side
- High-speed Internet connector (RJ-45) for each side
- Water—single or dual 1/4-turn brass ball valves (brass "T" connection) with 3/4-inch hose bibs
- Water meters with remote capability
- Water—anti-siphon faucet
- Loop-feed 3/8-inch stud lug copper busbar for up to 250 kcmil wire (recommended for salt water environments)
- Single-feed mechanical busbars for up to 250 kcmil wire
- Digital electronic meter for each side
- Wireless remote reading of electronic kilowatt meters
- Meter socket for each side powered (to accept glass style meter)
- Direct burial ground mounting stand stainless or galvanized
- Custom paint color

Standards and Certifications

- UL/CSA listed

Listed

Catalog Number Selection

P D U 4 7 0 0 0 0 0 0 1 2 K M

Type

P	= Powerhouse
Z	= PHSS

Lighting and Lens Color

A	= 7 W light	Amber
B	= Dual 7 W light	Amber
C	= 9 W light	Amber
D	= 13 W light	Amber
E	= Dual 13 W light	Amber
F	= No lighting	Amber
G	= 7 W light	Clear
H	= Dual 7 W light	Clear
I	= 9 W light	Clear
J	= 13 W light	Clear
K	= Dual 13 W light	Clear
L	= No lighting	Clear
M	= 7 W light	Special
N	= Dual 7 W light	Special
O	= 9 W light	Special
P	= 13 W light	Special
Q	= Dual 13 W light	Special
R	= No lighting	Special
S	= 350 MA LED	Amber
T	= 700 MA LED	Amber
U	= 350 MA LED	Clear
V	= 700 MA LED	Clear
W	= 350 MA LED	Special
Y	= 700 MA LED	Special

Metering Type

U	= Unmetered
D	= Digital electronic meters (side one)
T	= Digital electronic meters (side two)
B	= Digital electronic meters (both sides)
R	= Receptacles metered individually
M	= One meter socket (100 A)
N	= Two meter socket (100 A each)

Sides and Receptacles

R1S1	R2S1	R3S1	R4S1	R1S2	R2S2	R3S2	R4S2
0	0	0	0	0	0	0	0
1	1	1	1	1	1	1	1
2	2	2	2	2	2	2	2
3	3	3	3	3	3	3	3
4	4	4	4	4	4	4	4
5	5	5	5	5	5	5	5
6	6	6	6	6	6	6	6
7	7	7	7	7	7	7	7
8	8	8	8	8	8	8	8

0	= None
1	= 20 A GFI duplex
2	= 30 A, 125 V
4	= 50 A, 125/250 V
5	= 100 A, 208 V
6	= 100 A, 250 V
7	= 100 A, 277/480 V
8	= 100 A, 480 V

Water Option ①

0	= 0
1	= 1
2	= 2
3	= Single water meter
4	= Dual water meter
5	= Single meter, 2 V
6	= 1 frost free
7	= 2 frost free

Extra Unmetered GFI Receptacles

0	= None
1	= 1
2	= 2

Phone Cable TV and Internet Options

	Phone Jack	Cable TV Jack	Internet Option
A =	1	0	0
B =	1	0	1
C =	1	0	2
D =	1	1	0
E =	1	1	1
F =	1	1	2
G =	1	2	0
H =	1	2	1
I =	1	2	2
J =	2	0	0
K =	2	0	1
L =	2	0	2
M =	2	1	0
N =	2	1	1
O =	2	1	2
P =	2	2	0
Q =	2	2	1
R =	2	2	2
S =	0	2	2
T =	0	0	1
U =	0	0	2
V =	0	1	0
W =	0	1	1
X =	0	1	2
Y =	0	2	0
Z =	0	2	1
0 =	0	0	0

Bus

S	= Single-phase 3/8-inch copper busbar
F	= Three-phase 3/8-inch copper busbar
C	= Single-phase 3/8-inch Canadian busbar
T	= Three-phase 3/8-inch Canadian busbar
M	= Single-phase 300 kcmil mechanical lug bus
Z	= Three-phase 300 kcmil mechanical lug bus
L	= Single-phase 350 kcmil mechanical lug bus
P	= Three-phase 350 kcmil mechanical lug bus
N	= Single-phase 1/4-inch copper busbar
Q	= Single-phase 1/4-inch split mechanical busbar
A	= Single-phase 300 kcmil mechanical lug Canadian bus
B	= Three-phase 300 kcmil mechanical lug Canadian bus
D	= Single-phase 350 kcmil mechanical lug Canadian bus
E	= Three-phase 350 kcmil mechanical lug Canadian bus

Receptacle: R1S1 = Receptacle 1, Side 1
R2S1 = Receptacle 2, Side 1
R3S1 = Receptacle 3, Side 1
R1S2 = Receptacle 1, Side 2
R2S2 = Receptacle 2, Side 2
R3S2 = Receptacle 3, Side 2

Notes

① Number represents the quantity of 1/4-turn ball valves with 3/4-inch hose bibs.

Internet option also available. Contact factory for details.

Accessories

See **Page V1-T5-75**.

Dimensions

Approximate Dimensions in Inches (mm)

Powerhouse

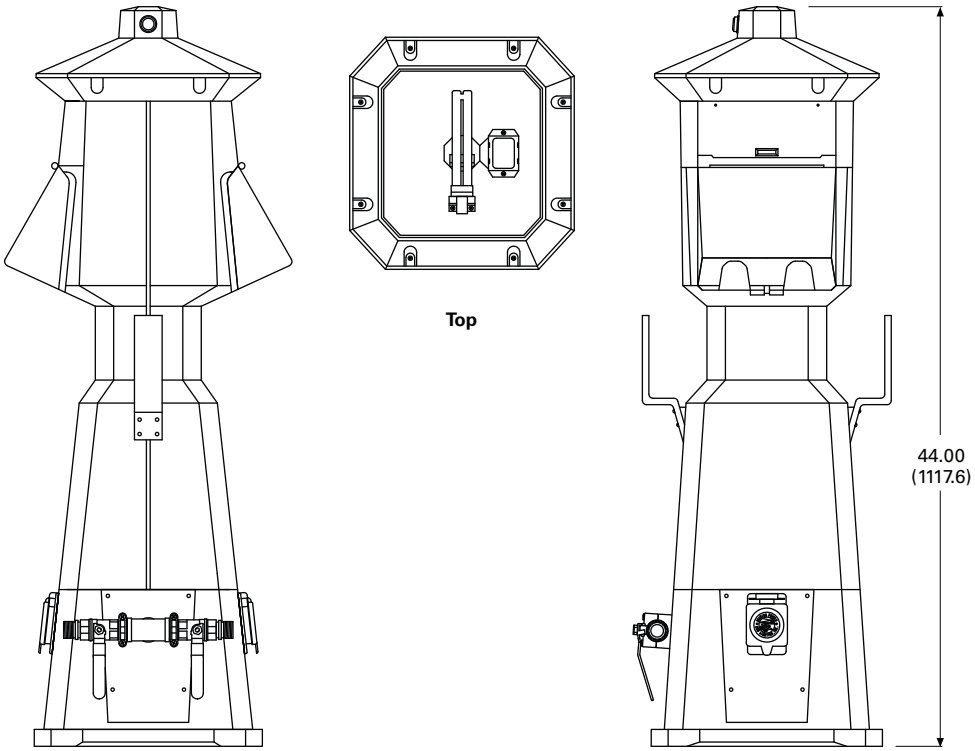

Side View **Front View**

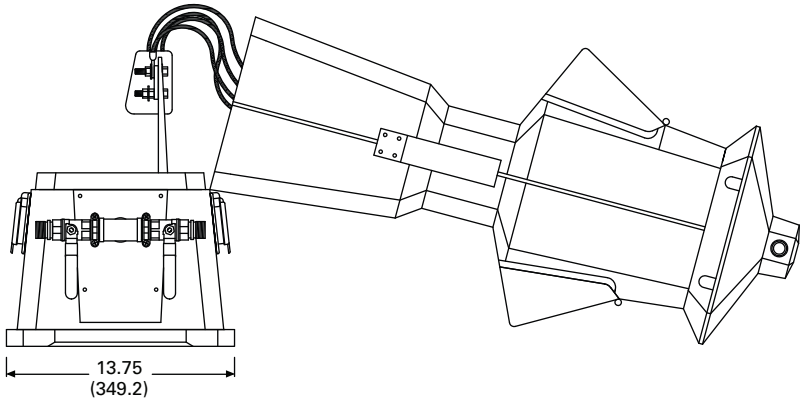

Broken View

Powerhouse—Stainless Steel (SS) Power Pedestal

Contents

Description	*Page*
Power Pedestals	**V1-T5-28**
Powerhouse Power Pedestal	**V1-T5-30**
Powerhouse—Stainless Steel (SS) Power Pedestal	
Catalog Number Selection	**V1-T5-34**
Accessories	**V1-T5-35**
Dimensions	**V1-T5-35**
Newport Camp Mate Power Pedestal	**V1-T5-36**
Park Light Power Pedestal	**V1-T5-39**
Firehouse	**V1-T5-42**
Digital Electronic Kilowatthour Meters	**V1-T5-44**
Distribution Equipment—Ground Fault Monitor	**V1-T5-45**
Distribution Equipment—Substations	**V1-T5-46**
Distribution Equipment—Panels	**V1-T5-49**
Distribution Equipment—Transformers	**V1-T5-50**

Powerhouse—Stainless Steel (SS) Power Pedestal

Product Description

For long-lasting durability and low maintenance, the new stainless steel Powerhouse–SS pedestal is the most resilient power center offered.

We have designed a stainless steel pedestal that will meet and exceed all applicable codes and withstand harsh inland and coastal environments.

Features

- Stainless steel housing with a limited lifetime warranty
- Photocell controlled 13 watt fluorescent light with amber lens
- Large removable access panel for easy installation and maintenance
- Weatherproof doors that protect receptacles and breakers
- Backlit faceplate to aid in hooking up at night
- Hose and cable brackets
- Powder-coated finish
- Loop-feed mechanical busbars that can accept up to 350 kcmil wire

Available Options

- Clear lens
- Photocell controlled single or dual 7 watt or 13 watt fluorescent light
- Telephone (RJ-11) for each side
- Cable TV for each side
- High-speed Internet connection (RJ-45) for each side
- Water–single or dual 1/4-turn brass ball valves (brass "T" connection) with 3/4-inch hose bibs
- Water meters with remote capability
- Water—anti-siphon faucet
- Direct burial stainless steel ground mounting stand
- Lockable doors
- Loop-feed 3/8-inch stud lug copper busbar for up to 350 kcmil wire (recommended for salt water environments)
- Single-feed mechanical busbars for up to 350 kcmil wire
- Digital electronic metering for each side
- Wireless remote reading of electronic kilowatt meters
- Meter socket for each side powered (to accept glass style meter)
- Four door design to add more outlets per pedestal

Catalog Number Selection

Z D U 4 7 0 0 0 0 0 0 1 2 K M

Type

P	= Powerhouse
Z	= PHSS

Lighting and Lens Color

A	= 7 W light	Amber
B	= Dual 7 W light	Amber
C	= 9 W light	Amber
D	= 13 W light	Amber
E	= Dual 13 W light	Amber
F	= No lighting	Amber
G	= 7 W light	Clear
H	= Dual 7 W light	Clear
I	= 9 W light	Clear
J	= 13 W light	Clear
K	= Dual 13 W light	Clear
L	= No lighting	Clear
M	= 7 W light	Special
N	= Dual 7 W light	Special
O	= 9 W light	Special
P	= 13 W light	Special
Q	= Dual 13 W light	Special
R	= No lighting	Special
S	= 350 MA LED	Amber
T	= 700 MA LED	Amber
U	= 350 MA LED	Clear
V	= 700 MA LED	Clear
W	= 350 MA LED	Special
Y	= 700 MA LED	Special

Metering Type

U	= Unmetered
D	= Digital electronic meters (side one)
T	= Digital electronic meters (side two)
B	= Digital electronic meters (both sides)
R	= Receptacles metered individually
M	= One meter socket (100 A)
N	= Two meter socket (100 A each)

Sides and Receptacles

R1S1	R2S1	R3S1	R4S1	R1S2	R2S2	R3S2	R4S2
0	0	0	0	0	0	0	0
1	1	1	1	1	1	1	1
2	2	2	2	2	2	2	2
3	3	3	3	3	3	3	3
4	4	4	4	4	4	4	4
5	5	5	5	5	5	5	5
6	6	6	6	6	6	6	6
7	7	7	7	7	7	7	7
8	8	8	8	8	8	8	8

0	= None
1	= 20 A GFI duplex
2	= 30 A, 125 V
4	= 50 A, 125/250 V
5	= 100 A, 208 V
6	= 100 A, 250 V
7	= 100 A, 277/480 V
8	= 100 A, 480 V

Water Option ①

0	= 0
1	= 1
2	= 2
3	= Single water meter
4	= Dual water meter
5	= Single meter, 2 V
6	= 1 frost free
7	= 2 frost free

Extra Unmetered GFI Receptacles

0	= None
1	= 1
2	= 2

Phone Cable TV and Internet Options

	Phone Jack	Cable TV Jack	Internet Option
A =	1	0	0
B =	1	0	1
C =	1	0	2
D =	1	1	0
E =	1	1	1
F =	1	1	2
G =	1	2	0
H =	1	2	1
I =	1	2	2
J =	2	0	0
K =	2	0	1
L =	2	0	2
M =	2	1	0
N =	2	1	1
O =	2	1	2
P =	2	2	0
Q =	2	2	1
R =	2	2	2
S =	0	2	2
T =	0	0	1
U =	0	0	2
V =	0	1	0
W =	0	1	1
X =	0	1	2
Y =	0	2	0
Z =	0	2	1
0 =	0	0	0

Bus

S	= Single-phase 3/8-inch copper busbar
F	= Three-phase 3/8-inch copper busbar
C	= Single-phase 3/8-inch Canadian busbar
T	= Three-phase 3/8-inch Canadian busbar
M	= Single-phase 300 kcmil mechanical lug bus
Z	= Three-phase 300 kcmil mechanical lug bus
L	= Single-phase 350 kcmil mechanical lug bus
P	= Three-phase 350 kcmil mechanical lug bus
N	= Single-phase 1/4-inch copper busbar
Q	= Single-phase 1/4-inch split mechanical busbar
A	= Single-phase 300 kcmil mechanical lug Canadian bus
B	= Three-phase 300 kcmil mechanical lug Canadian bus
D	= Single-phase 350 kcmil mechanical lug Canadian bus
E	= Three-phase 350 kcmil mechanical lug Canadian bus

Receptacle: R1S1 = Receptacle 1, Side 1
R2S1 = Receptacle 2, Side 1
R3S1 = Receptacle 3, Side 1
R1S2 = Receptacle 1, Side 2
R2S2 = Receptacle 2, Side 2
R3S2 = Receptacle 3, Side 2

Notes

① Number represents the quantity of 1/4-turn ball valves with 3/4-inch hose bibs.

Internet option also available. Contact factory for details.

Accessories

See **Page V1-T5-75**.

Dimensions

Approximate Dimensions in Inches (mm)

Powerhouse—Stainless Steel (SS)

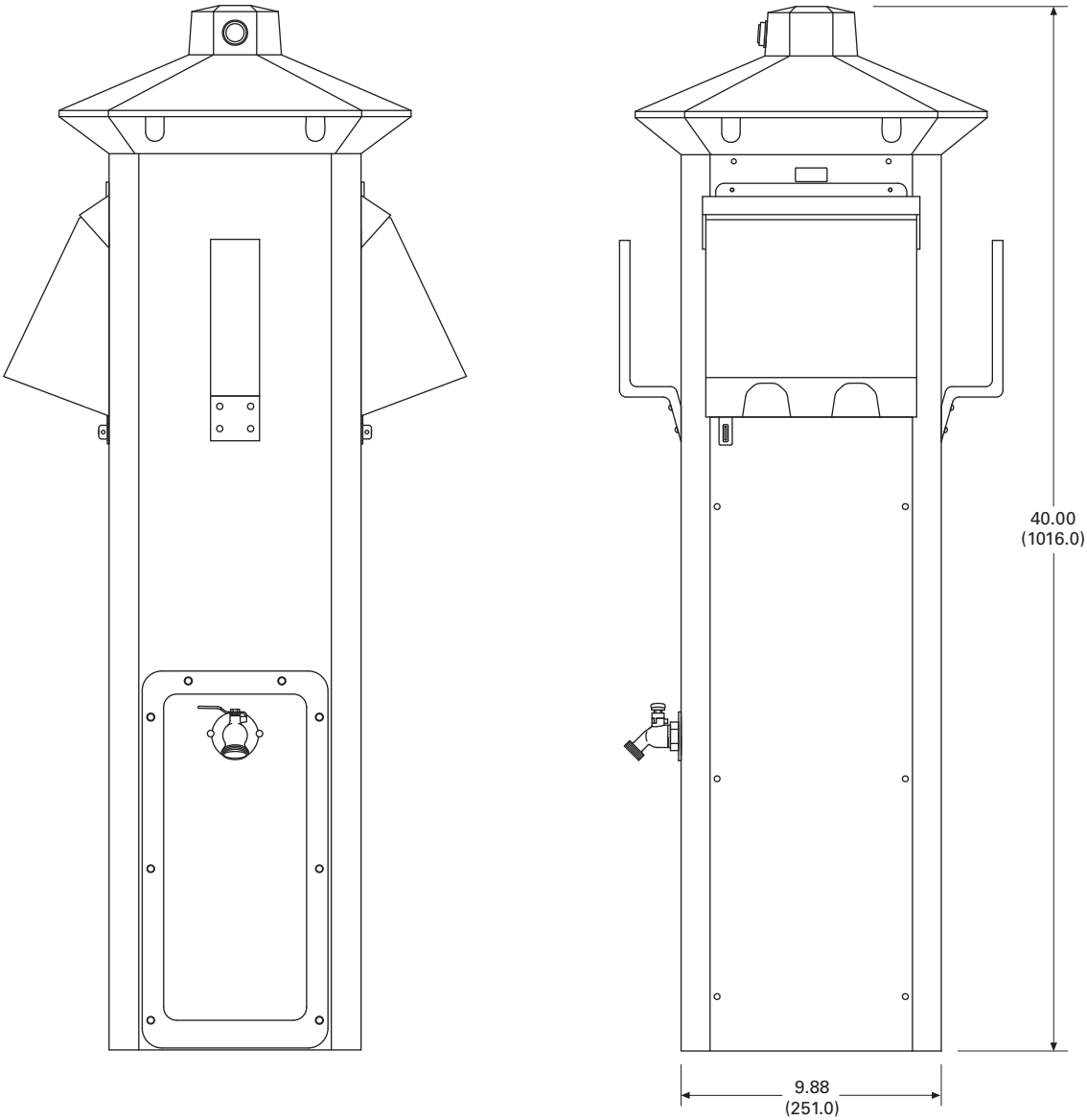

Newport Camp Mate Power Pedestal

Contents

Description	*Page*
Power Pedestals	**V1-T5-28**
Powerhouse Power Pedestal	**V1-T5-30**
Powerhouse—Stainless Steel (SS) Power Pedestal	**V1-T5-33**
Newport Camp Mate Power Pedestal	
Catalog Number Selection	**V1-T5-37**
Accessories	**V1-T5-38**
Dimensions	**V1-T5-38**
Park Light Power Pedestal	**V1-T5-39**
Firehouse	**V1-T5-42**
Digital Electronic Kilowatthour Meters	**V1-T5-44**
Distribution Equipment—Ground Fault Monitor	**V1-T5-45**
Distribution Equipment—Substations	**V1-T5-46**
Distribution Equipment—Panels	**V1-T5-49**
Distribution Equipment—Transformers	**V1-T5-50**

Newport Camp Mate Power Pedestal

Product Description

The Newport Camp Mate provides many of the features and options of our other full-size pedestals, but in a compact self-contained unit. This model provides more mounting options to RV park owners than any other model. It can be mounted to our stainless steel stand either flanged or direct burial, a post or any wall.

It comes standard with a resin housing that will never rust or deteriorate and provides area lighting as well as aiding in hooking up at night. This unit is especially suitable to many RV park renovation projects as well as new RV parks.

Features

- Photocell controlled 7 watt fluorescent light with amber lens
- Lockable weatherproof door that protects receptacles and breakers
- Engineered resin housing
- Limited lifetime warranty on the housing
- Designed to mount on a post, wall or an optional custom stand
- Loop-feed 1/4-inch copper stud lug busbars that can accept 2/0 AWG wire for Camp Mate without optional stand
- Loop-feed mechanical busbars that can accept up to 2/0 AWG wire for Camp Mate on optional stand

Available Options

- 36-inch stainless steel stand
- 40-inch stainless steel pad-mounted stand
- 60-inch direct burial stainless steel stand
- Telephone (RJ-11)
- Cable TV
- High-speed Internet connector (RJ-45)
- Water—single or dual 1/4-turn brass ball valves (brass "T" connection) with 3/4-inch hose bibs mounted on optional stand
- Water—anti-siphon backflow preventer
- Loop feed 3/8-inch stud lug copper busbar for up to 350 kcmil wire with stand (recommended for salt water environments)
- Single-feed mechanical busbars for up to 350 kcmil wire available with stand
- Digital electronic meter
- Wireless remote reading of electronic kilowatt meter
- Meter socket available with aluminum stands (to accept glass style meter)

Standards and Certifications

The Newport Camp Mate is UL listed and comes with a limited lifetime warranty on the housing.

Listed

Catalog Number Selection

C A Y B U 4 3 0 1 1 2 W M

Type

N	= NP Harbor Mate
C	= NP Camp Mate

Photocell

Y	= Yes
N	= No

Lighting and Lens Color

A	=	7 W light	Amber
C	=	9 W light	Amber
F	=	No lighting	Amber
G	=	7 W light	Clear
I	=	9 W light	Clear
L	=	No lighting	Clear
M	=	7 W light	Special
O	=	9 W light	Special
R	=	No lighting	Special
S	=	350 MA LED	Amber
T	=	700 MA LED	Amber
U	=	350 MA LED	Clear
V	=	700 MA LED	Clear
W	=	350 MA LED	Special
Y	=	700 MA LED	Special

Lighting Protection

B	= Breaker protected
F	= Fuse protected

Metering Type ①

U	= Unmetered
D	= Digital electronic meters
R	= Receptacles metered individually

Sides and Receptacles

R1S1	R2S1	R3S1
0	**0**	**0**
1	**1**	**1**
2	**2**	
3	**3**	
4	**4**	

0	= None
1	= 20 A GFI duplex
2	= 30 A, 125 V
3	= 50 A, 125 V
4	= 50 A, 125/250 V

Stand

0	= 0
1	= 1

Water Option ②

0	= 0
1	= 1
2	= 2

Hard Wired Breakers

S1

0	= None
2	= 20 A, two-pole
3	= 30 A

Bus

S	= Single-phase 1/4-inch copper busbar
F	= Three-phase 1/4-inch copper busbar
C	= Single-phase 1/4-inch Canadian busbar
M	= Mechanical lug 2/0
Q	= Single-phase 1/4-inch split mechanical busbar (with stand ONLY)
A	= 1/4-inch Canadian mechanical

Phone Cable TV and Internet Options

	Phone Jack	Cable TV Jack	Internet Option
A =	1	0	0
B =	1	0	1
C =	1	0	2
D =	1	1	0
E =	1	1	1 (Camp Mate only)
T =	0	0	1
V =	0	1	0
W =	0	1	1
0 =	0	0	0

Receptacle: R1 = Receptacle 1
R2 = Receptacle 2
R3 = Receptacle 3

Notes

① 20 A GFIs not metered.

② Number represents the quantity of 1/4-turn ball valves with 3/4-inch hose bibs (with stand only).

Accessories

See **Page V1-T5-75**.

Dimensions

Approximate Dimensions in Inches (mm)

Newport Camp Mate

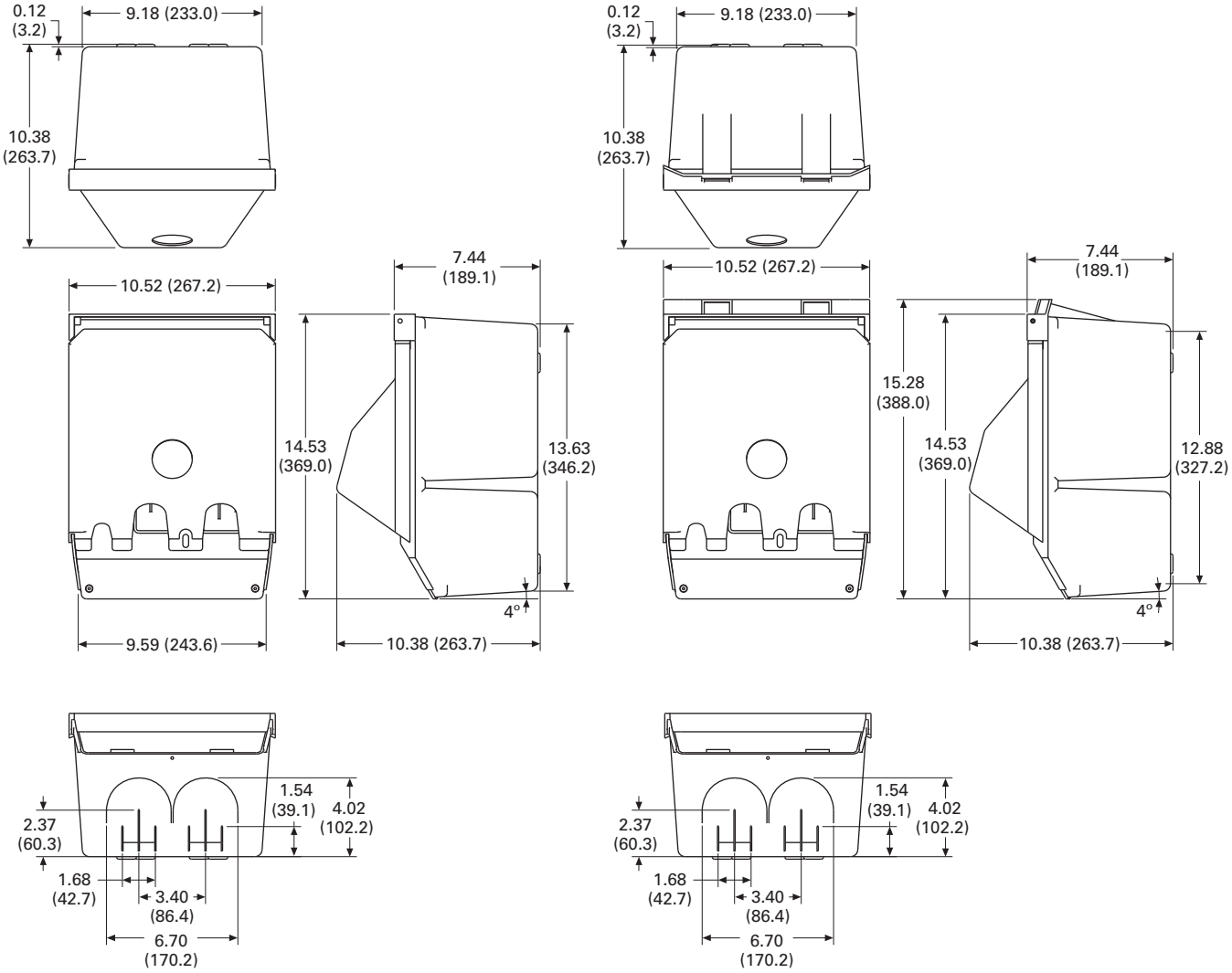

Newport Redesign

Newport Redesign With Meters

Park Light Power Pedestal

Contents

Description	*Page*
Power Pedestals	**V1-T5-28**
Powerhouse Power Pedestal	**V1-T5-30**
Powerhouse—Stainless Steel (SS) Power Pedestal	**V1-T5-33**
Newport Camp Mate Power Pedestal	**V1-T5-36**
Park Light Power Pedestal	
Catalog Number Selection	**V1-T5-40**
Accessories	**V1-T5-41**
Dimensions	**V1-T5-41**
Firehouse	**V1-T5-42**
Digital Electronic Kilowatthour Meters	**V1-T5-44**
Distribution Equipment—Ground Fault Monitor	**V1-T5-45**
Distribution Equipment—Substations	**V1-T5-46**
Distribution Equipment—Panels	**V1-T5-49**
Distribution Equipment—Transformers	**V1-T5-50**

Park Light Power Pedestal

Product Description

The elegant design of the Park Light complements park landscaping and provides essential lighting required for park safety and security for campground paths, walkways, recreational areas and even pools. The Park Light has the same 360 degree lighting design as the Powerhouse and a resin housing that will never rust or deteriorate.

At 10¢/kWH, it will provide area lighting at a cost of less than 50¢/month and the bulbs will last for about three years. The Park Light is a perfect lighting fixture for any campground and especially for RV parks with Powerhouse utility centers.

Features

- Photocell controlled dual 13 watt fluorescent light with amber lens
- Engineered resin housing with a two-part polyurethane coating for a UV-resistant, long-lasting finish
- Limited lifetime warranty on the housing
- Loop-feed 1/4-inch stud lug copper busbars that can accept 2/0 AWG wire

Available Options

- Clear lens
- Photocell controlled single or dual 7 watt or 13 watt fluorescent light
- Phone (RJ-11)
- Cable TV
- High-speed Internet (RJ-45)
- Water faucet(s) with 3/4-inch hose bib
- Water—anti-siphon backflow preventer
- Digital electronic meter
- Wireless remote reading of electronic kilowatt meter
- Direct burial ground mounting stand
- Custom paint color

Standards and Certifications

The housing has a limited lifetime warranty, and the unit is UL listed.

Listed

Catalog Number Selection

H D Y B D 4 7 0 1 2 A M

Type

H	= Hatteras Light
R	= Park Light

Photocell

Y	= Yes
N	= No

Lighting Protection

B	= Breaker protected
F	= Fuse protected

Metering Type ①

U	= Unmetered
D	= Digital electronic meters
R	= Receptacles metered individually

Lighting and Lens Color

A	= 7 W light	Amber
B	= Dual 7 W light	Amber
C	= 9 W light	Amber
D	= 13 W light	Amber
E	= Dual 13 W light	Amber
F	= No lighting	Amber
G	= 7 W light	Clear
H	= Dual 7 W light	Clear
I	= 9 W light	Clear
J	= 13 W light	Clear
K	= Dual 13 W light	Clear
L	= No lighting	Clear
M	= 7 W light	Special
N	= Dual 7 W light	Special
O	= 9 W light	Special
P	= 13 W light	Special
Q	= Dual 13 W light	Special
R	= No lighting	Special
S	= 350 MA LED	Amber
T	= 700 MA LED	Amber
U	= 350 MA LED	Clear
V	= 700 MA LED	Clear
W	= 350 MA LED	Special
Y	= 700 MA LED	Special

Sides and Receptacles

R1S1	R2S1	R1S2
0	**0**	**0**
1	**1**	**1**
2	**2**	**2**
3	**3**	**3**
4	**4**	**4**

0	= None
1	= 20 A GFI duplex
2	= 30 A, 125 V
3	= 50 A, 125 V
4	= 50 A, 125/250 V

Water Option ②

0	= 0
1	= 1 (1/2-inch)
2	= 2 (1/2-inch)
3	= 1 (3/4-inch)
4	= 2 (3/4-inch)

Hard Wired Breakers

S1

0	= None
2	= 20 A, two-pole
3	= 30 A

Bus

S	= Single-phase 1/4-inch copper busbar
F	= Three-phase 1/4-inch copper busbar
C	= Single-phase 1/4-inch Canadian busbar
M	= Mechanical lug 2/0
A	= 1/4-inch Canadian mechanical

Phone Cable TV and Internet Options

Phone Jack	Cable TV Jack	Internet Option
A = 1	0	0
B = 1	0	1
C = 1	0	2
D = 1	1	0
E = 1	1	1
F = 1	1	2
G = 1	2	0
H = 1	2	1
I = 1	2	2
J = 2	0	0
M = 2	1	0
P = 2	2	0
S = 0	2	2
T = 0	0	1
U = 0	0	2
V = 0	1	0
W = 0	1	1
X = 0	1	2
Y = 0	2	0
Z = 0	2	1

Receptacle: R1 = Receptacle 1, Side 1
R2 = Receptacle 2, Side 2

Notes

① 20 A GFIs not metered.

② Number represents the quantity of 1/4-turn ball valves with 3/4-inch hose bibs (with stand only).

Accessories

See **Page V1-T5-75**.

Dimensions

Approximate Dimensions in Inches (mm)

Park Light

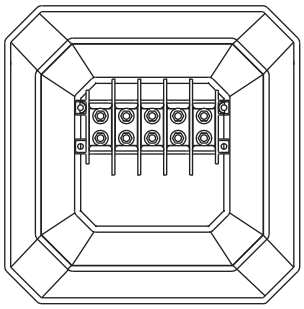

Busbar Access Top Removed

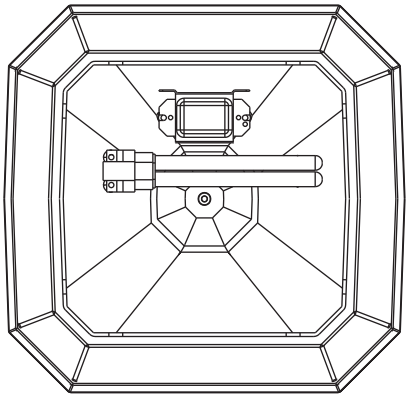

Inside Top

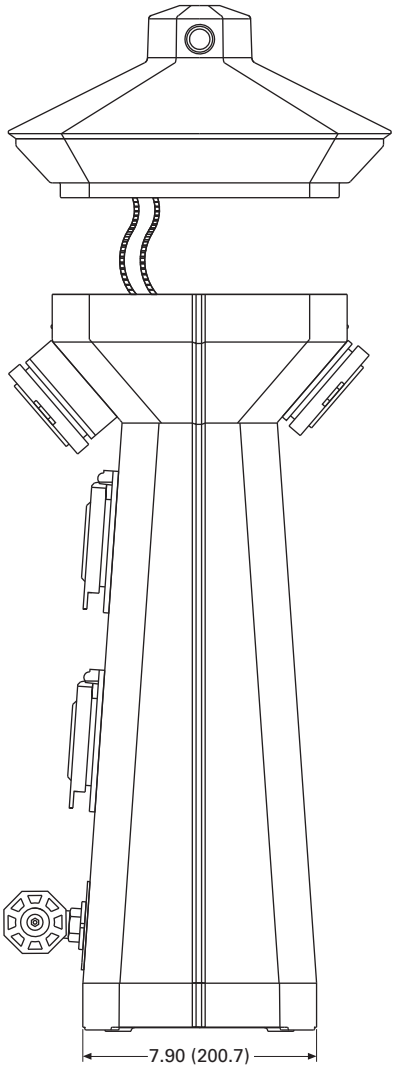

Side View

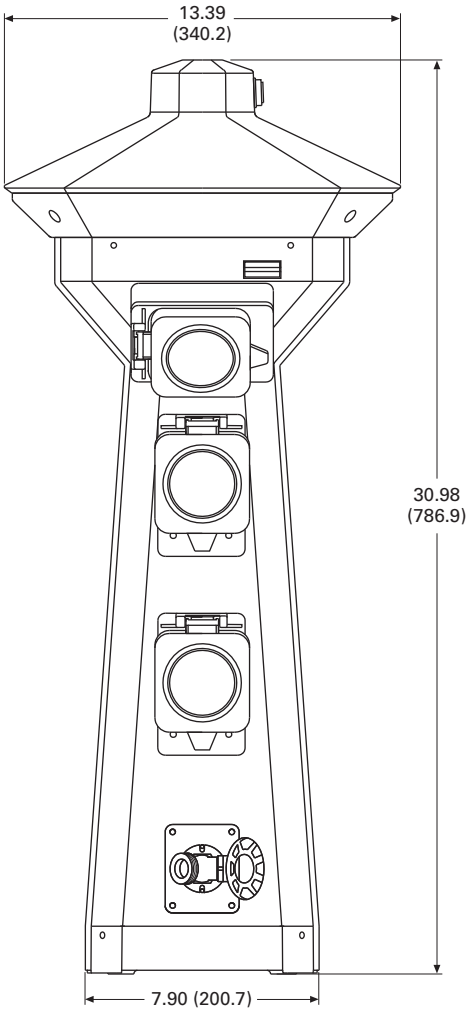

Front View

Firehouse

Contents

Description	*Page*
Power Pedestals	**V1-T5-28**
Powerhouse Power Pedestal	**V1-T5-30**
Powerhouse—Stainless Steel (SS) Power Pedestal	**V1-T5-33**
Newport Camp Mate Power Pedestal	**V1-T5-36**
Park Light Power Pedestal	**V1-T5-39**
Firehouse	
Accessories	**V1-T5-43**
Dimensions	**V1-T5-43**
Digital Electronic Kilowatthour Meters	**V1-T5-44**
Distribution Equipment—Ground Fault Monitor	**V1-T5-45**
Distribution Equipment—Substations	**V1-T5-46**
Distribution Equipment—Panels	**V1-T5-49**
Distribution Equipment—Transformers	**V1-T5-50**

Firehouse

Product Description

The Firehouse is designed to provide added fire safety to RV parks and campgrounds. The Firehouse provides a convenient location and easy access to fire extinguishers and to an optional life ring when installed around pools and waterfront amenities.

In addition, the Firehouse provides area lighting for easy identification during an emergency and for security lighting around the unit. The Firehouse can be equipped with an alarm strobe light and siren, which are automatically activated when the fire extinguisher cabinet door is opened or the optional life ring is removed.

Features

- Photocell controlled 13 watt fluorescent light
- Amber lens for bug reduction
- 10 lb ABC Type fire extinguisher
- Stainless steel housing with oven-baked enamel finish with an engineered resin base and top
- Limited lifetime warranty on the housing

Available Options

- Alarm strobe light and siren
- Optional 24-inch white or orange life ring for poolside or dockside installations
- 20 lb ABC Type fire extinguisher

Catalog Number Selection

F A Y A E N

Type
F = Firehouse

Photocell
Y = Yes
N = No

Alarm/Strobe
A = Include alarm/strobe
N = No alarm/strobe

Fire Extinguisher
E = Include 10 lb extinguisher
N = No extinguisher
X = Include 20 lb extinguisher

24-Inch Life Ring
R = Include life ring
N = No life ring

Lighting and Lens Color

A = 7 W light	Amber	**I** = 9 W light	Clear	**Q** = Dual 13 W light	Special
B = Dual 7 W light	Amber	**J** = 13 W light	Clear	**R** = No lighting	Special
C = 9 W light	Amber	**K** = Dual 13 W light	Clear	**S** = 350 MA LED	Amber
D = 13 W light	Amber	**L** = No lighting	Clear	**T** = 700 MA LED	Amber
E = Dual 13 W light	Amber	**M** = 7 W light	Special	**U** = 350 MA LED	Clear
F = No lighting	Amber	**N** = Dual 7 W light	Special	**V** = 700 MA LED	Clear
G = 7 W light	Clear	**O** = 9 W light	Special	**W** = 350 MA LED	Special
H = Dual 7 W light	Clear	**P** = 13 W light	Special	**Y** = 700 MA LED	Special

Accessories

See **Page V1-T5-75**.

Dimensions

Approximate Dimensions in Inches (mm)

Firehouse–SS

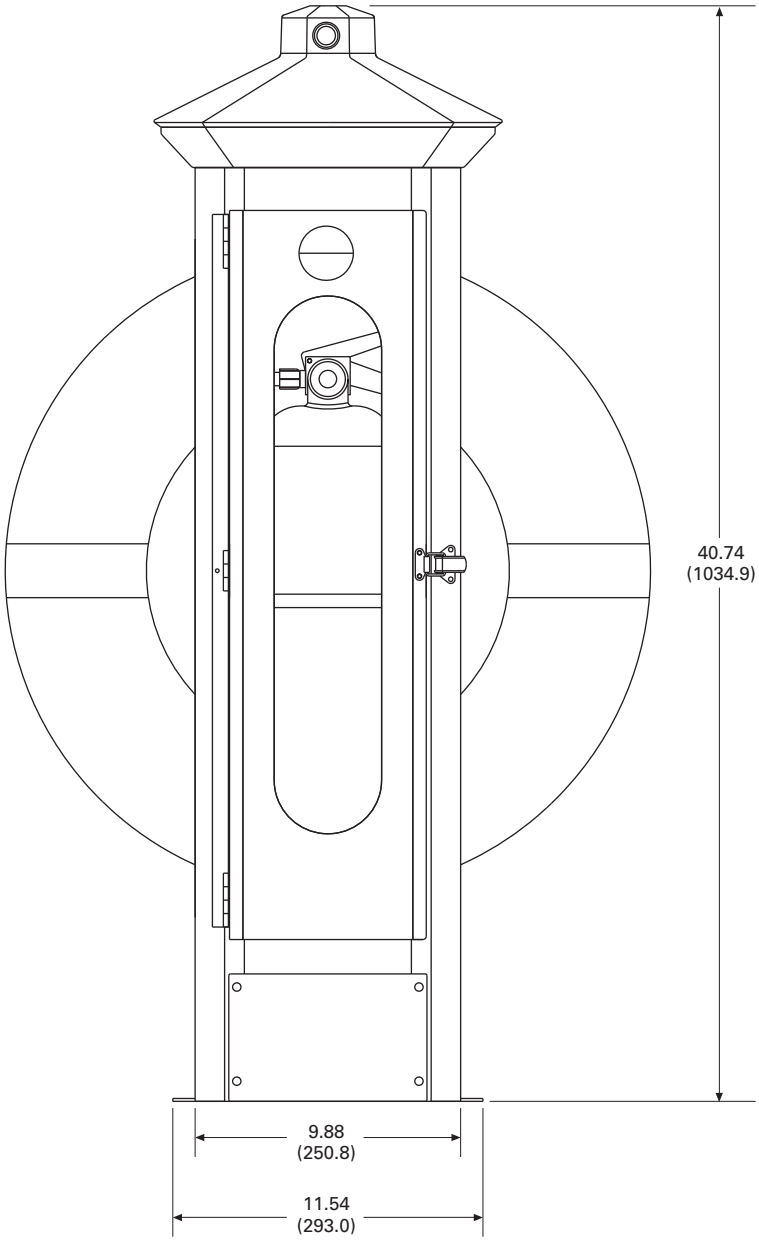

Digital Electronic Kilowatthour Meters

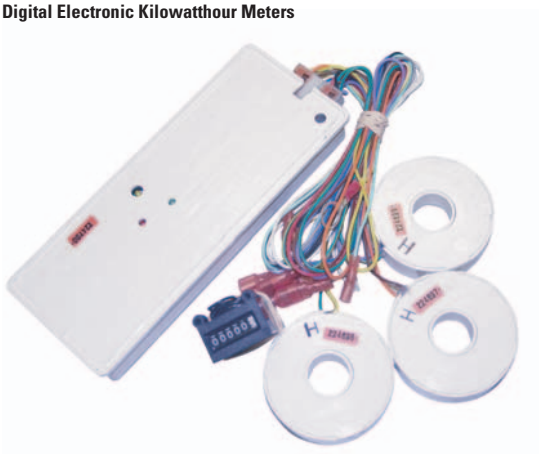

Contents

Description	*Page*
Power Pedestals	**V1-T5-28**
Powerhouse Power Pedestal	**V1-T5-30**
Powerhouse—Stainless Steel (SS) Power Pedestal	**V1-T5-33**
Newport Camp Mate Power Pedestal	**V1-T5-36**
Park Light Power Pedestal	**V1-T5-39**
Firehouse	**V1-T5-42**
Digital Electronic Kilowatthour Meters	
Distribution Equipment—Ground Fault Monitor	**V1-T5-45**
Distribution Equipment—Substations	**V1-T5-46**
Distribution Equipment—Panels	**V1-T5-49**
Distribution Equipment—Transformers	**V1-T5-50**

Digital Electronic Kilowatthour Meters

Product Description

Using the latest surface mount technology, Eaton manufactures a digital electronic kilowatt hour meter that exceeds the +/– 2% accuracy required by ANSI (American National Standards Institute) C-12.1 and is approved by the state of California at +/– 1% over the full range of 0–100 A from a 0.5 to 1 power factor and is available for both single- and three-phase applications.

The meter drives an electro-mechanical counter that requires a 12 V pulse each tenth of a kilowatthour, providing 10 pulses per kilowatt used. The meter output can be hard wired or connected to a transmitter in the pedestal for wireless transmission to a receiver displaying the output on a PC for direct billing of up to 1,000 individual customers.

Features

Our meter is designed to be user friendly in that all connections from external sources and the meter output are through one 14-pin locking connector. This feature eliminates many common problems, such as reverse line polarity and improper coil polarity. Simple LEDs, both red and green, indicate line and load condition and the pulsed LED indicates the rate of power consumption.

Wireless System

All of our meters are "wireless capable" to allow for wireless meter reading. This technology enables the marina or RV park to get meter readings from one central location rather than visiting every site to read the counters.

Meter Socket Capabilities

Meter sockets are available on the Powerhouse and Powerhouse–SS.

Standard:

- Four jaw
- Ring-type
- 100 A

Available Options

- 200 A (SS only)
- Lockable hasp
- Ringless (SS only)
- Five jaw
- Seven jaw (SS only)

Product Selection

One Element Meter

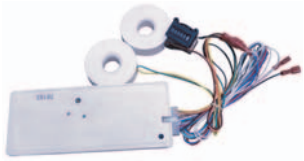

Two Element Meter

Three Element Meter

Ground Fault Monitor

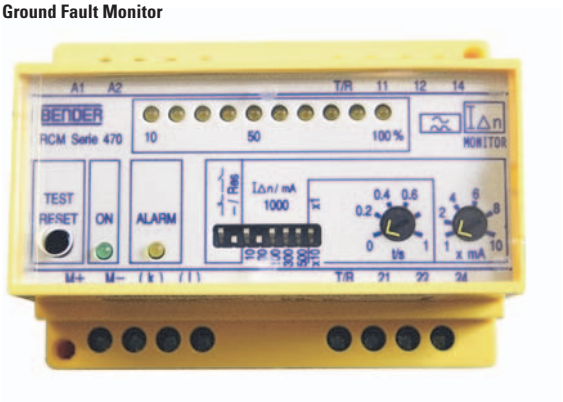

Contents

Description	*Page*
Power Pedestals	**V1-T5-28**
Powerhouse Power Pedestal	**V1-T5-30**
Powerhouse—Stainless Steel (SS) Power Pedestal	**V1-T5-33**
Newport Camp Mate Power Pedestal	**V1-T5-36**
Park Light Power Pedestal	**V1-T5-39**
Firehouse	**V1-T5-42**
Digital Electronic Kilowatthour Meters	**V1-T5-44**
Distribution Equipment—Ground Fault Monitor	
Distribution Equipment—Substations	**V1-T5-46**
Distribution Equipment—Panels	**V1-T5-49**
Distribution Equipment—Transformers	**V1-T5-50**

Distribution Equipment—Ground Fault Monitor

Product Description

New to our product offering are ground fault monitoring systems designed to detect fault currents in the AC shore power system that are too low to trip a circuit breaker. The Ground Fault Monitor helps reduce the risk of injury or property damage, which may result from stray fault currents. Our ground fault monitoring system provides information to the maintenance staff on the overall condition of the AC electrical system. The ground fault monitoring system operates 24 hours a day and can be monitored by non-technical personnel.

Features

- UL listed current transformers
- Adjustable trip level 10 mA to 10 A
- Current transformers up to 8 1/4-inch diameter
- Visual and/or audible alarm
- Housing of fiberglass or powder coated stainless steel available

Power Guard

The ground fault monitor detects ground fault currents by means of current transformers (CT), which are placed around main or branch circuits. If a ground fault occurs, the CT will detect the amount of fault current and send a signal to the ground fault monitoring device where the amount of fault current is displayed with the faulty circuit identified. The detected fault can either activate an indicator alarm or disconnect the faulted circuit.

Substations

Side-by-Side Substation

Contents

Description	*Page*
Power Pedestals	**V1-T5-28**
Powerhouse Power Pedestal	**V1-T5-30**
Powerhouse—Stainless Steel (SS) Power Pedestal	**V1-T5-33**
Newport Camp Mate Power Pedestal	**V1-T5-36**
Park Light Power Pedestal	**V1-T5-39**
Firehouse	**V1-T5-42**
Digital Electronic Kilowatthour Meters	**V1-T5-44**
Distribution Equipment—Ground Fault Monitor	**V1-T5-45**
Distribution Equipment—Substations	
Features, Benefits and Functions	**V1-T5-47**
Available Options	**V1-T5-48**
Standards and Certifications	**V1-T5-48**
Dimensions	**V1-T5-48**
Distribution Equipment—Panels	**V1-T5-49**
Distribution Equipment—Transformers	**V1-T5-50**

Distribution Equipment—Substations

Product Description

The introduction of substations into the marina and recreational vehicle market allows Eaton to be your complete marina and RV park electrical products supplier. We are able to assist in the design and layout of your marina or RV park electrical system from the primary service provider to your power pedestal. Our substations are designed for any coastal or inland environment and are constructed of powder-coated stainless steel NEMA 3R housing cabinets. All substation cabinets come with our limited lifetime warranty. All of our substations use Eaton's panels and circuit breakers, providing our customers the utmost in circuit protection and quality.

Application Description

The aluminum and Galvaneal cabinets are recommended for inland applications. The substations can be configured with 50 to 330 kVA single-phase or three-phase copper wound transformers and up to 20 single-phase or 12 three-phase branch breakers. An optional three-sided double-wall cabinet is available that provides air flow between the panels. All substations come standard with temperature-controlled cooling fans.

Product Selection Guide

Panel and Transformer Combinations

Panel	Transformer
Single-Phase	
200 A	50 kVA
300 A	75 kVA
400 A	100 kVA
600 A	150 kVA
700 A	167.5 kVA
800 A	200 kVA
1000 A	250 kVA
1200 A	330 kVA
Three-Phase	
100 A	45 kVA
200 A	75 kVA
300 A	112.5 kVA
400 A	150 kVA
600 A	225 kVA
800 A	300 kVA

Features, Benefits and Functions

- Limited lifetime warranty on the housing
- All stainless steel hardware
- Temperature controlled cooling fans in the transformer and circuit breaker compartments
- Lockable door

Ventilation

The substation ventilation is designed to optimize air circulation over and around the transformers and through the panel compartment so that the substation operates at lower temperatures.

Substations come equipped with temperature-controlled cooling fans for exhausting hot air from the cabinet and solar shield.

In addition, substations are available with a double-walled cabinet and solar shield, which allow for cooling of both the exterior surface of the cabinet and the internal components.

Substations

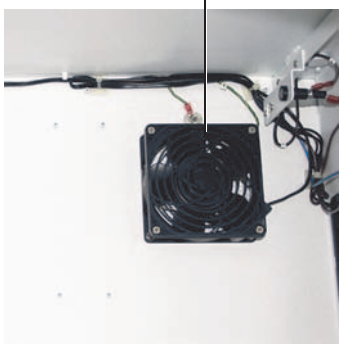

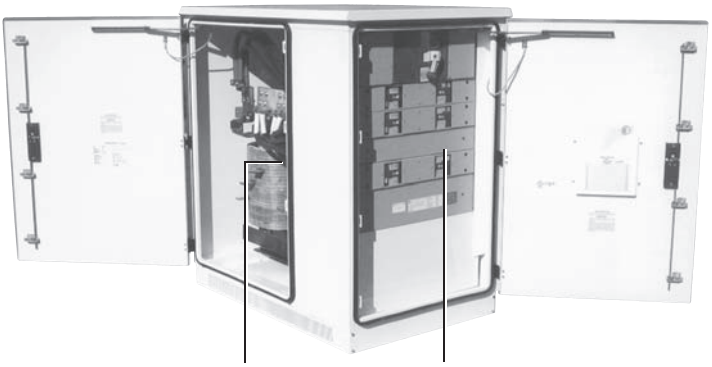

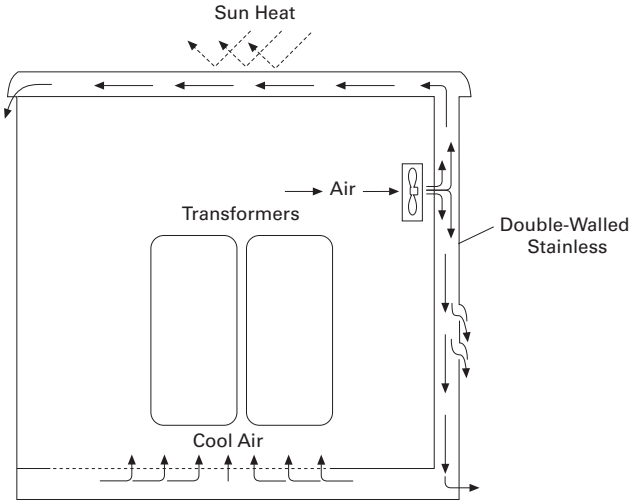

Double-Walled Construction

Available Options

- Powder-coated cabinets made of stainless steel or fiberglass
- Limited lifetime warranty on housing. Transformer and secondary distribution panel in a single enclosure have a one-year limited warranty
- Stainless steel housing and hardware with locking doors
- Single-phase and three-phase models
- Overload capacity meets ANSI L57.96–01.250
- Optional double-walled construction
- Temperature-controlled fans for cooling
- Custom-made copper wound single-phase or three-phase transformers from 50 to 330 kVA
- Up to 1200 A main circuit breaker with 15 single-phase branch circuit breakers or 10 three-phase branch circuit breakers
- Substations can be equipped with photocells to turn on and off lights
- A 20 A GFI can be installed in the cabinet, as well as a ground fault monitoring system

Standards and Certifications

- cULus listed

c UL us
Listed

Dimensions

Approximate Dimensions in Inches (mm)

Substations

Standard Substation	
Height	53.00 (1346.2)
Width	51.00 (1295.4)
Depth	33.00 (838.2)
Side-by-Side Substation	
Height	53.00 (1346.2)
Width	66.00 (1676.4)
Depth	30.00 (762.0)
Double Panel Substation	
Height	53.00 (1346.2)
Width	63.00 (1600.2)
Depth	33.00 (838.2)

Panels

Contents

Description	*Page*
Power Pedestals	**V1-T5-28**
Powerhouse Power Pedestal	**V1-T5-30**
Powerhouse—Stainless Steel (SS) Power Pedestal	**V1-T5-33**
Newport Camp Mate Power Pedestal	**V1-T5-36**
Park Light Power Pedestal	**V1-T5-39**
Firehouse	**V1-T5-42**
Digital Electronic Kilowatthour Meters	**V1-T5-44**
Distribution Equipment—Ground Fault Monitor	**V1-T5-45**
Distribution Equipment—Substations	**V1-T5-46**
Distribution Equipment—Panels	
Distribution Equipment—Transformers	**V1-T5-50**

Distribution Equipment—Panels

Product Description

We now can offer our customers Eaton's PRL-3A and PRL-4 panels as stand-alone units or in one of our substations. All of our busses are made of copper and are load rated, breakers are bolt-on type. Distribution panels can be single-phase or three-phase based on your system requirements. Distribution panels can also have a main breaker or a main lug. Branch circuit breakers are provided based on customer requirements.

Features

- All internal wiring is fine stranded 2000 V insulated copper
- Copper busbars
- All exterior hardware is stainless steel

Available Options

- NEMA 3R or 4X
- Powder-coated stainless steel
- Main breaker up to 1200 A
- Branch breaker 20 to 1200 A
- Main lug only
- We also offer 480 V models—single-phase and three-phase

Single-Phase

- Up to 1200 A main circuit breakers
- Up to 42 branch circuit breakers

Three-Phase

- Up to 1200 A main circuit breakers
- Up to 42 branch circuit breakers

Standards and Certifications

- UL listed
- cULus listed

Listed

Transformers

Contents

Description	*Page*
Power Pedestals	**V1-T5-28**
Product Selection Guide	**V1-T5-29**
Powerhouse Power Pedestal	**V1-T5-30**
Powerhouse—Stainless Steel (SS) Power Pedestal	**V1-T5-33**
Newport Camp Mate Power Pedestal	**V1-T5-36**
Park Light Power Pedestal	**V1-T5-39**
Firehouse	**V1-T5-42**
Digital Electronic Kilowatthour Meters	**V1-T5-44**
Distribution Equipment—Ground Fault Monitor	**V1-T5-45**
Distribution Equipment—Substations	**V1-T5-46**
Distribution Equipment—Panels	**V1-T5-49**
Distribution Equipment—Transformers	

Distribution Equipment—Transformers

Product Description

Because of the high humidity and corrosive conditions of coastal environments, our transformers are wound with Class H heavily insulated copper bar and are double dipped in tough insulating varnish that protects the copper, as well as reduces the hum that is typical in a transformer that is not double dipped. For marine applications, we provide a third overcoat of high temperature epoxy to protect against the severe saltwater environment. We can provide this transformer in single-phase, from 50 to 500 kVA, and three-phase, from 45 to 300 kVA.

Features

- Copper wound transformer coils double dipped in high temperature baking varnish
- Copper terminations
- Marine transformers with epoxy overcoat
- All copper-to-copper connections

Available Options

- Single-phase: 50–500 kVA
- Three-phase: 45–300 kVA
- Epoxy overcoat for non-marine applications

Primary Voltages

- 480 wye three-phase
- 480 V three-phase delta three-wire + ground
- 480 V single-phase two-wire + ground

Secondary Voltages

- 127/220 V three-phase wye four-wire
- 120/208 V three-phase wye four-wire
- 120/240 V single-phase three-wire

Marina Power Distribution Transformer kVA Availabilities

- Single-phase: 50, 75, 100, 150, 167.5, 200, 250, 330, 500 kVA
- Three-phase: 45, 75, 112.5, 150, 225, 300 kVA

Standards and Certifications

- cULus listed

c UL us Listed

Marina Power and Lighting Equipment

High-Quality, Weatherproof Electrical Equipment

Contents

Description	*Page*
Power Pedestals	
Product Selection Guide	**V1-T5-52**
Lighthouse	**V1-T5-54**
Lighthouse–SS	**V1-T5-58**
Admiral–SS	**V1-T5-62**
Newport Harbor Mate	**V1-T5-65**
Hatteras Light	**V1-T5-69**
Firehouse	**V1-T5-73**
Smart Start	**V1-T5-79**
Mariner	**V1-T5-80**
Digital Electronic Kilowatthour Meters	**V1-T5-81**
Distribution Equipment—Ground Fault Monitor	**V1-T5-82**
Distribution Equipment—Mega Yacht Powerpoint	**V1-T5-83**
Distribution Equipment—Substations	**V1-T5-86**
Distribution Equipment—Panels	**V1-T5-89**
Distribution Equipment—Transformers	**V1-T5-90**

Learn Online

Power Pedestals

Product Overview

Known as a leader in electrical control, power distribution, and industrial automation products and services, Eaton is a quality driven company that constantly looks for ways to provide enhanced product and service solutions for their customers. Eaton will be able to provide Marina developers a complete electrical solution. For more information on the other products available from Eaton, visit us online at www.eaton.com or www.marinapower.com.

What Eaton has to Offer

- Eaton has more marina power outlets in service than all other suppliers combined
- We offer complementary comprehensive in-house electrical designs for your complete marina development using all high quality Eaton products
- We can provide your marina development with complete remote wireless digital electronic meter reading
- Not only can Eaton provide your marina with the highest quality power pedestals and marine distribution equipment, we can also supply your entire electrical needs for your surrounding development and beyond from safety switches to loadcenters and much more

Product Selection Guide

Power Pedestal Quick Guide

	Lighthouse	Lighthouse–SS	Hatteras Light	Newport Harbor Mate	Admiral–SS	Firehouse	Mariner	Lookout	Power Point
Main housing	Engineered resin	Stainless steel	Engineered resin	Engineered resin	Stainless steel	Stainless steel	Engineered resin	Stainless steel	Stainless steel
Top	Engineered resin	Engineered resin	Engineered resin	Engineered resin	Stainless steel	Engineered resin	Engineered resin	Stainless steel	Stainless steel
Optional stand	—	—	—	Stainless steel	—	—	PVC	—	—
External hardware	Stainless steel	Stainless steel	Stainless steel	Stainless steel	Stainless steel	Stainless steel	Stainless steel	Stainless steel	Stainless steel
Standard lightwattage(s)	13 W	13 W	13 W	7 W	13 W	13 W	5 W, 7 W & 13 W	—	13 W
LED lighting option	Yes	Yes	Yes	No	Yes	Yes	No	No	Yes
Photocell	Yes	Yes	Yes	Yes	Yes	Yes	No	No	Yes
Lockable doors	Yes	Yes	Yes	Yes	Yes	—	—	—	Yes
Hose hangers	Yes	Yes	No	No	Yes	No	No	No	No
Electric meters	Yes—up to 4	Yes—up to 4	Yes—up to 2	Yes—up to 2	Yes—up to 4	No	No	No	Yes—up to 6
Remote meter reading	Yes	Yes	Yes	Yes	Yes	No	No	No	Yes
Water	Two 3/4″	Two 3/4″	Two 1/2″	Two 3/4″	Two 3/4″	None	None	None	One 3/4″ or more
Water meters	Yes	Yes	No	Yes	Yes	No	No	No	Yes
Telephone	Yes	Yes	Yes	Yes	Yes	No	No	No	Yes
Cable TV	Yes	Yes	Yes	Yes	Yes	No	No	No	Yes
Internet	Yes	Yes	Yes	Yes	Yes	No	No	No	Yes
Fire extinguisher	No	No	No	No	No	Yes—up to 20 lbs	No	No	No
Life ring	No	No	No	No	No	Yes—24″	No	No	No
Alarm and strobe light	No	No	No	No	No	Yes	No	No	No
20 A 110 V GFI	Yes	Yes	Yes	Yes	Yes	No	No	No	Yes
30 A 125 V twist—lock	Yes	Yes	Yes	Yes	Yes	No	No	No	Yes
50 A 125/250 V twist—lock	Yes	Yes	Yes	Yes	Yes	No	No	No	Yes
100 A 120/240 V pin and sleeve	Yes	Yes	No	No	Yes	No	No	No	Yes
100 A 120/208 V pin and sleeve	Yes	Yes	No	No	Yes	No	No	No	Yes
100 A 277/480 V pin and sleeve	Yes	Yes	No	No	Yes	No	No	No	Yes
100 A 480 V pin and sleeve	Yes	Yes	No	No	Yes	No	No	No	Yes
200 A 480 V pin and sleeve	No	No	No	No	Yes	No	No	No	Yes
Hardwire compatible	No	No	No	No	No	No	No	No	Yes
TVSS compatible	Yes	Yes	No	No	Yes	No	No	No	Yes
Card swipe compatible	Yes	Yes	No	Yes	Yes	No	No	No	Yes
Security camera compatible	No	No	No	No	No	No	No	Yes	No
Busbar rating	Up to 500 A	Up to 500 A	Up to 140 A	Up to 140 A	Up to 500 A	—	—	—	Up to 800 A
Maximum wire size—single feed	350 kcmil	350 kcmil	#2/0	#2/0	350 kcmil	—	—	—	(3) 500 kcmil
Maximum wire size—loop feed	#4/0	#4/0	#1	#1	350 kcmil	—	—	—	(3) 500 kcmil
Height	44″	40″	30″	36″	48″	43.5″	24″ to 72″	72″ to 96″	50″
Width	13.75″	9.875″	7.5″	10.5″	14″	9.875″	7″	9″	50″
Depth	13.75″	9.875″	7.5″	14.5″	14″	9.875″	7″	9″	36″
Warranty									
Housing	Limited lifetime	Limited lifetime	Limited lifetime	Limited lifetime	Limited lifetime	Limited lifetime	Limited lifetime	Limited lifetime	Limited lifetime
Receptacles and breakers	2 years	2 years	2 years	2 years	2 years	—	—	—	2 years
Lighting assembly	1 year	1 year	1 year	1 year	1 year	1 year	1 year	—	1 year

Receptacles

Side One		Side Two	
None	None	None	None
30 A	None	None	None
30 A	30 A	None	None
30 A	None	30 A	None
30 A	30 A	30 A	30 A
30 A	50 A	None	None
30 A	None	50 A	None
30 A	50 A	30 A	50 A
50 A	None	None	None
50 A	50 A	None	None
50 A	None	50 A	None
50 A	50 A	50 A	50 A
100 A 120/240 V	None	None	None
100 A 120/240 V	None	50–50 A	None
100 A 120/240 V	None	100 A 120/240 V	None
100 A 120/240 V	50–50 A	100 A 120/240 V	50–50 A
100 A 120/208 V	None	None	None
100 A 120/208 V	None	100 A 120/240 V	None
100 A 120/240 V	100 A 120/240 V	100 A 120/240 V	100 A 120/240 V
100 A 120/208 V	100 A 120/208 V	100 A 120/208 V	100 A 120/208 V
100 A 120/240 V	100 A 120/240 V	100 A 120/208 V	100 A 120/208 V

Receptacle Configuration Availability

Lighthouse	Lighthouse–SS	Admiral–SS	Hatteras Light	Newport Harbor Mate
Receptacle Available with GFI Receptacles				
Yes	Yes	Yes	Yes	Yes
Yes	Yes	Yes	Yes	Yes
Yes	Yes	Yes	No	Yes
Yes	Yes	Yes	Yes	No
Yes	Yes	Yes	No	No
Yes	Yes	Yes	No	Yes
Yes	Yes	Yes	Yes ①	No
Yes	Yes	Yes	No	No
Yes	Yes	Yes	Yes	Yes
Yes	Yes	Yes	No	Yes
Yes	Yes	Yes	No	No
Yes	Yes	Yes	No	No
Yes	Yes	Yes	No	No
Yes	Yes	Yes	No	No
Yes	Yes	Yes	No	No
No	No	Yes	No	No
Yes	Yes	Yes	No	No
Yes	Yes	Yes	No	No
No	No	Yes	No	No
No	No	Yes	No	No
No	No	Yes	No	No

Note

① Configuration available with no additional GFI receptacles.

Lighthouse

Contents

Description	*Page*
Power Pedestals	**V1-T5-51**
Lighthouse	
Available Options	**V1-T5-55**
Catalog Number Selection	**V1-T5-56**
Accessories	**V1-T5-57**
Dimensions	**V1-T5-57**
Lighthouse–SS	**V1-T5-58**
Admiral–SS	**V1-T5-62**
Newport Harbor Mate	**V1-T5-65**
Hatteras Light	**V1-T5-69**
Firehouse	**V1-T5-73**
Smart Start	**V1-T5-79**
Mariner	**V1-T5-80**
Digital Electronic Kilowatthour Meters	**V1-T5-81**
Distribution Equipment—Ground Fault Monitor	**V1-T5-82**
Distribution Equipment—Mega Yacht Powerpoint	**V1-T5-83**
Distribution Equipment—Substations	**V1-T5-86**
Distribution Equipment—Panels	**V1-T5-89**
Distribution Equipment—Transformers	**V1-T5-90**

Lighthouse

Product Description

One of our most popular units, the all-purpose Lighthouse® pedestal has a wide range of features. With units in service around the world, this stylish power pedestal is recognized for its practicality and exceptional durability.

Engineered to withstand the most severe weather conditions, Lighthouse power pedestals can be found in marinas from Alaska to the tropics.

Note: Custom paint color.

Note: Wireless remote reading of electronic kilowatt meters.

Note: Clear lens.

Features, Benefits and Functions

- Photocell controlled 13 watt fluorescent light (clear lens or amber lens for bug reduction)
- Lockable weatherproof doors that protect breakers and receptacles while in use (a requirement of NFPA 303 and NEC Article 555)
- Hose and cable brackets
- Heavy resin housing with a two-part polyurethane coating for a UV-resistant, long-lasting finish
- Copper busbar with ratings from 250 to 500 A
- New "hingeless" base providing easy access for both installation and maintenance
- Backlit faceplate for easy receptacle plug-in at night

Lighthouse

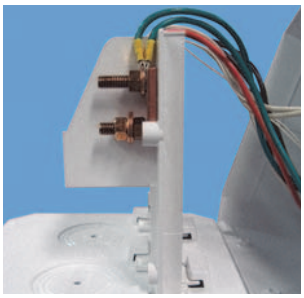

Copper Busbar with Ratings from 250 to 500 A

Cable and Internet Connections

New Hingeless Base

Optional Meter Socket

Available Options

- Digital electronic metering (one, two or three element meters available)
- Built-in meter socket
- 20 A / 125 V GFI receptacle (max. of two GFI receptacles per pedestal)

Note: 20 A GFI receptacles are not to be used for shore power.

- High-speed Internet connections
- Wireless remote metering for electric and water
- Transient voltage surge suppressor (TVSS) to protect from voltage surges, spikes or lightning on the AC power line (extends warranty on internal parts to three years)
- Stainless steel door hinge on receptacle main doors
- Single or dual steel 1/4-turn ball valves with 3/4-inches
- Hose bibs and stainless steel handles
- Single or dual phone and/or cable TV connections
- Base cap
- Base extension
- LED lighting

Catalog Number Selection

L D U 4 7 0 0 0 0 0 0 1 2 K M

Type

L	= Lighthouse
S	= LHSS

Lighting and Lens Color

A	= 7 W light	Amber
B	= Dual 7 W light	Amber
C	= 9 W light	Amber
D	= 13 W light	Amber
E	= Dual 13 W light	Amber
F	= No lighting	Amber
G	= 7 W light	Clear
H	= Dual 7 W light	Clear
I	= 9 W light	Clear
J	= 13 W light	Clear
K	= Dual 13 W light	Clear
L	= No lighting	Clear
M	= 7 W light	Special
N	= Dual 7 W light	Special
O	= 9 W light	Special
P	= 13 W light	Special
Q	= Dual 13 W light	Special
R	= No lighting	Special
S	= 350 MA LED	Amber
T	= 700 MA LED	Amber
U	= 350 MA LED	Clear
V	= 700 MA LED	Clear
W	= 350 MA LED	Special
Y	= 700 MA LED	Special

Metering Type

U	= Unmetered
D	= Digital electronic meters (side one)
T	= Digital electronic meters (side two)
B	= Digital electronic meters (both sides)
R	= Receptacles metered individually
M	= One meter socket (100 A)
N	= Two meter socket (100 A each)
V	= 200 A meter socket

Sides and Receptacles

R1S1	R2S1	R3S1	R4S1	R1S2	R2S2	R3S2	R4S2
0	0	0	0	0	0	0	0
1	1	1	1	1	1	1	1
2	2	2	2	2	2	2	2
3	3	3	3	3	3	3	3
4	4	4	4	4	4	4	4
5	5	5	5	5	5	5	5
6	6	6	6	6	6	6	6
7	7	7	7	7	7	7	7
8	8	8	8	8	8	8	8

0	= None
1	= 20 A GFI duplex
2	= 30 A, 125 V
3	= 50 A, 125 V
4	= 50 A, 125/250 V
5	= 100 A, 208 V
6	= 100 A, 250 V
7	= 100 A, 277/480 V
8	= 100 A, 480 V

Water Option ①

0	= 0
1	= 1
2	= 2
3	= Single water meter
4	= Dual water meter
5	= Single meter, 2 V
6	= 1 frost free
7	= 2 frost free

Extra Unmetered GFI Receptacles ②

0	= None
1	= 1
2	= 2

Phone Cable TV and Internet Options

	Phone Jack	Cable TV Jack	Internet Option
A =	1	0	0
B =	1	0	1
C =	1	0	2
D =	1	1	0
E =	1	1	1
F =	1	1	2
G =	1	2	0
H =	1	2	1
I =	1	2	2
J =	2	0	0
K =	2	0	1
L =	2	0	2
M =	2	1	0
N =	2	1	1
O =	2	1	2
P =	2	2	0
Q =	2	2	1
R =	2	2	2
S =	0	2	2
T =	0	0	1
U =	0	0	2
V =	0	1	0
W =	0	1	1
X =	0	1	2
Y =	0	2	0
Z =	0	2	1
0 =	0	0	0

Bus

S	= Single-phase 3/8-inch copper busbar
F	= Three-phase 3/8-inch copper busbar
C	= Single-phase 3/8-inch Canadian busbar
T	= Three-phase 3/8-inch Canadian busbar
M	= Single-phase 300 kcmil mechanical lug bus
Z	= Three-phase 300 kcmil mechanical lug bus
L	= Single-phase 350 kcmil mechanical lug bus
P	= Three-phase 350 kcmil mechanical lug bus
N	= Single-phase 1/4-inch copper busbar
Q	= Single-phase 1/4-inch split mechanical busbar

Receptacle: R1S1 = Receptacle 1, Side 1
R2S1 = Receptacle 2, Side 1
R1S2 = Receptacle 1, Side 2
R2S2 = Receptacle 2, Side 2

Notes

① Number represents the quantity of 1/4-turn ball valves with 3/4-inch hose bibs.

② Quantity of 20 A GFI duplex receptacles.

Accessories

See **Page V1-T5-75**.

Dimensions

Approximate Dimensions in Inches (mm)

Lighthouse

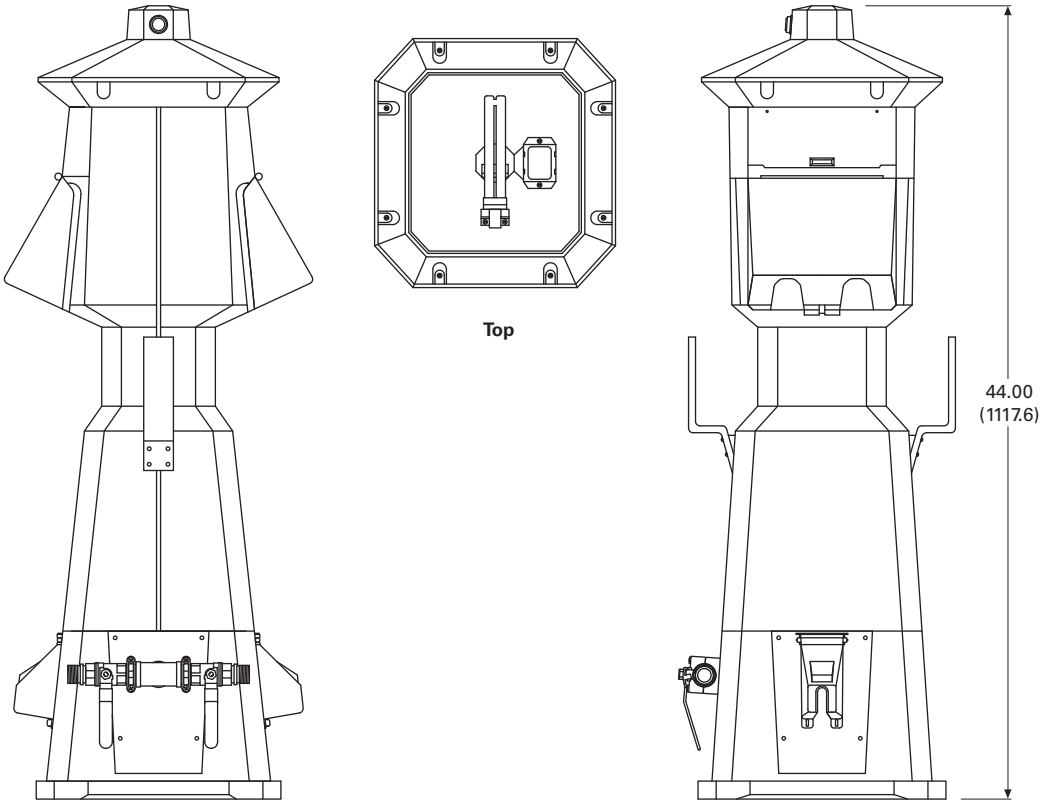

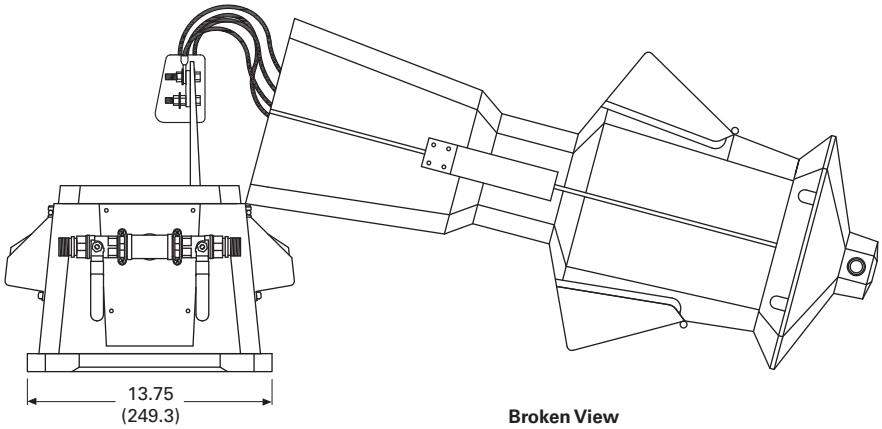

Lighthouse–SS

Contents

Description	*Page*
Power Pedestals	**V1-T5-51**
Lighthouse	**V1-T5-54**
Lighthouse–SS	
Available Options	**V1-T5-59**
Catalog Number Selection	**V1-T5-60**
Accessories	**V1-T5-61**
Dimensions	**V1-T5-61**
Admiral–SS	**V1-T5-62**
Newport Harbor Mate	**V1-T5-65**
Hatteras Light	**V1-T5-69**
Firehouse	**V1-T5-73**
Smart Start	**V1-T5-79**
Mariner	**V1-T5-80**
Digital Electronic Kilowatthour Meters	**V1-T5-81**
Distribution Equipment—Ground Fault Monitor	**V1-T5-82**
Distribution Equipment—Mega Yacht Powerpoint	**V1-T5-83**
Distribution Equipment—Substations	**V1-T5-86**
Distribution Equipment—Panels	**V1-T5-89**
Distribution Equipment—Transformers	**V1-T5-90**

Lighthouse–SS

Product Description

The Lighthouse–SS offers the same standard features and available options as the standard Lighthouse. But, like all of the stainless steel products manufactured here, the Lighthouse–SS is made with high-quality 316L stainless steel for superior quality and performance.

Note: 20/125 A GFI receptacle.

Note: Wireless remote reading of electronic kilowatt meters.

Note: Clear lens.

Note: Meter socket for each side powered (to accept glass style meter).

Note: Receptacle configurations available:
30 A
30 A / 30 A
30 A / 50 A
50 A / 50 A
100 A (single-phase) 120/240 V
100 A (three-phase) 120/208 V
200 A (three-phase) 480 V

Features, Benefits and Functions

- Photocell controlled 13 watt fluorescent light (clear lens or amber lens for bug reduction)
- Available with lockable weatherproof doors
- Hose and cable brackets
- Long-lasting maintenance-free 316L stainless steel housing with limited lifetime warranty
- Copper busbar with ratings from 250 to 500 A
- Large removable access panel for easy maintenance and installation
- Backlit faceplate for easy receptacle plug-in at night

Lighthouse–SS

Available Options

- Digital electronic metering (one, two or three element meters available)
- 20 A / 125 V GFI receptacle (max. of two GFI receptacles per pedestal)

Note: 20 A GFI receptacles are not to be used for shore power.

- High-speed Internet connection
- Wireless remote metering available for water and electricity
- Transient voltage surge suppressor (TVSS) to protect from voltage surges, spikes or lightning on the AC power line (extends warranty on internal parts to three years)
- Single or dual phone and/or cable TV connections
- Single or dual 3/4-inch hose bibs with stainless steel
- Handles LED lighting

Phone and Cable TV Connections

New Door

Copper Busbar with Ratings from 250 to 500 A

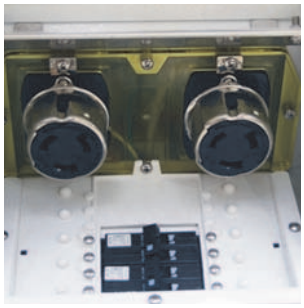

Backlit Faceplate to Aid in Hooking Up at Night

Catalog Number Selection

L D U 4 7 0 0 0 0 0 0 1 2 K M

Type

L	= Lighthouse
S	= LHSS

Lighting and Lens Color

A	= 7 W light	Amber
B	= Dual 7 W light	Amber
C	= 9 W light	Amber
D	= 13 W light	Amber
E	= Dual 13 W light	Amber
F	= No lighting	Amber
G	= 7 W light	Clear
H	= Dual 7 W light	Clear
I	= 9 W light	Clear
J	= 13 W light	Clear
K	= Dual 13 W light	Clear
L	= No lighting	Clear
M	= 7 W light	Special
N	= Dual 7 W light	Special
O	= 9 W light	Special
P	= 13 W light	Special
Q	= Dual 13 W light	Special
R	= No lighting	Special
S	= 350 MA LED	Amber
T	= 700 MA LED	Amber
U	= 350 MA LED	Clear
V	= 700 MA LED	Clear
W	= 350 MA LED	Special
Y	= 700 MA LED	Special

Metering Type

U	= Unmetered
D	= Digital electronic meters (side one)
T	= Digital electronic meters (side two)
B	= Digital electronic meters (both sides)
R	= Receptacles metered individually
M	= One meter socket (100 A)
N	= Two meter socket (100 A each)
V	= 200 A meter socket

Sides and Receptacles

R1S1	R2S1	R3S1	R4S1	R1S2	R2S2	R3S2	R4S2
0	0	0	0	0	0	0	0
1	1	1	1	1	1	1	1
2	2	2	2	2	2	2	2
3	3	3	3	3	3	3	3
4	4	4	4	4	4	4	4
5	5	5	5	5	5	5	5
6	6	6	6	6	6	6	6
7	7	7	7	7	7	7	7
8	8	8	8	8	8	8	8

0	= None
1	= 20 A GFI duplex
2	= 30 A, 125 V
3	= 50 A, 125 V
4	= 50 A, 125/250 V
5	= 100 A, 208 V
6	= 100 A, 250 V
7	= 100 A, 277/480 V
8	= 100 A, 480 V

Water Option ①

0	= 0
1	= 1
2	= 2
3	= Single water meter
4	= Dual water meter
5	= Single meter, 2 V
6	= 1 frost free
7	= 2 frost free

Extra Unmetered GFI Receptacles ②

0	= None
1	= 1
2	= 2

Phone Cable TV and Internet Options

	Phone Jack	Cable TV Jack	Internet Option
A	= 1	0	0
B	= 1	0	1
C	= 1	0	2
D	= 1	1	0
E	= 1	1	1
F	= 1	1	2
G	= 1	2	0
H	= 1	2	1
I	= 1	2	2
J	= 2	0	0
K	= 2	0	1
L	= 2	0	2
M	= 2	1	0
N	= 2	1	1
O	= 2	1	2
P	= 2	2	0
Q	= 2	2	1
R	= 2	2	2
S	= 0	2	2
T	= 0	0	1
U	= 0	0	2
V	= 0	1	0
W	= 0	1	1
X	= 0	1	2
Y	= 0	2	0
Z	= 0	2	1
0	= 0	0	0

Bus

S	= Single-phase 3/8-inch copper busbar
F	= Three-phase 3/8-inch copper busbar
C	= Single-phase 3/8-inch Canadian busbar
T	= Three-phase 3/8-inch Canadian busbar
M	= Single-phase 300 kcmil mechanical lug bus
Z	= Three-phase 300 kcmil mechanical lug bus
L	= Single-phase 350 kcmil mechanical lug bus
P	= Three-phase 350 kcmil mechanical lug bus
N	= Single-phase 1/4-inch copper busbar
Q	= Single-phase 1/4-inch split mechanical busbar

Receptacle: R1S1 = Receptacle 1, Side 1
R2S1 = Receptacle 2, Side 1
R1S2 = Receptacle 1, Side 2
R2S2 = Receptacle 2, Side 2

Notes

① Number represents the quantity of 1/4-turn ball valves with 3/4-inch hose bibs.

② Quantity of 20 A GFI duplex receptacles.

Accessories

See **Page V1-T5-75**.

Dimensions

Approximate Dimensions in Inches (mm)

Lighthouse–SS

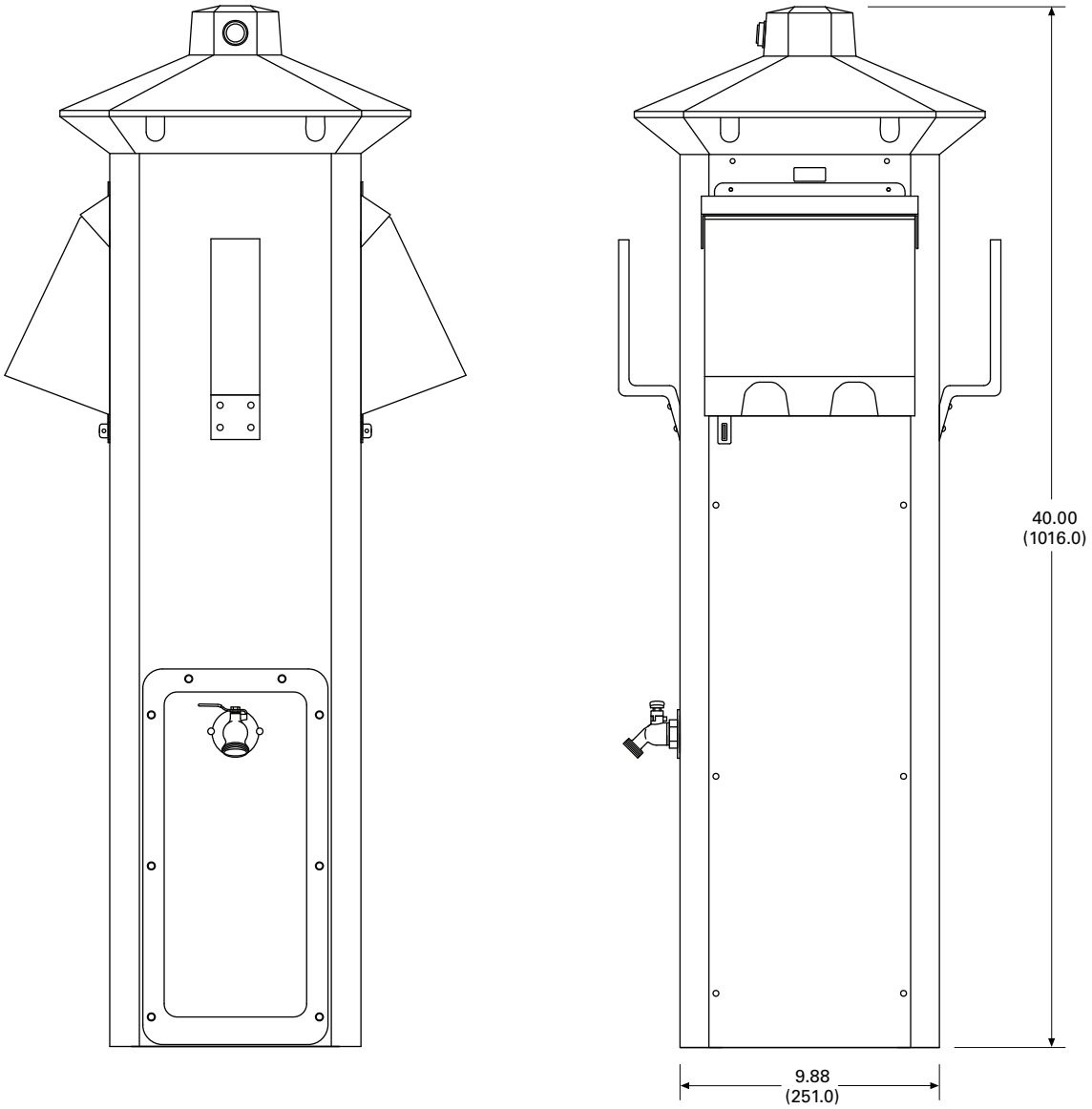

Admiral–SS

Contents

Description	Page
Power Pedestals	V1-T5-51
Lighthouse	V1-T5-54
Lighthouse–SS	V1-T5-58
Admiral–SS	
Catalog Number Selection	V1-T5-63
Accessories	V1-T5-64
Dimensions	V1-T5-64
Newport Harbor Mate	V1-T5-65
Hatteras Light	V1-T5-69
Firehouse	V1-T5-73
Smart Start	V1-T5-79
Mariner	V1-T5-80
Digital Electronic Kilowatthour Meters	V1-T5-81
Distribution Equipment—Ground Fault Monitor	V1-T5-82
Distribution Equipment—Mega Yacht Powerpoint	V1-T5-83
Distribution Equipment—Substations	V1-T5-86
Distribution Equipment—Panels	V1-T5-89
Distribution Equipment—Transformers	V1-T5-90

Admiral–SS

Product Description

Truly the flagship of our unitized pedestal line, the Admiral–SS possesses amperage capabilities up to 500 A and voltages of 480/277 three-phase, 120/240 single-phase and combinations of these receptacles all in one unit to serve nearly any size Mega Yacht.

Features

- Heavy 316L stainless steel housing that is powder coated with a polyester resin
- Photocell controlled 13 watt fluorescent light with clear lens that provides 360 degrees of lighting

Available Options

- Dual phone and/or cable TV connections
- Four 100 A receptacles of any two voltage combinations such as 277/480 three-phase, 120/208 three-phase or 120/240 single-phase
- 200 A / 480 V receptacles
- when the 100 A 120/240 V receptacles are used, two 50 A 120/240 V receptacles can also be provided for a total of 500 A
- 20 A / 125 V GFI receptacle (max. of two GFI receptacles per pedestal)

Note: 20 A GFI receptacles are not to be used for shore power.

- Single or dual Cat5 high-speed Internet connections
- Single or dual water 1/4-turn ball valves with 3/4-inch hose bibs and stainless steel handles
- Digital metering available
- Wireless remote metering available for water and electricity
- LED lighting

Catalog Number Selection

A D U 4 7 0 0 0 0 0 0 1 2 K M

Type

A	= Admiral–SS

Lighting and Lens Color

A	= 7 W light	Amber
B	= Dual 7 W light	Amber
C	= 9 W light	Amber
D	= 13 W light	Amber
E	= Dual 13 W light	Amber
F	= No lighting	Amber
G	= 7 W light	Clear
H	= Dual 7 W light	Clear
I	= 9 W light	Clear
J	= 13 W light	Clear
K	= Dual 13 W light	Clear
L	= No lighting	Clear
M	= 7 W light	Special
N	= Dual 7 W light	Special
O	= 9 W light	Special
P	= 13 W light	Special
Q	= Dual 13 W light	Special
R	= No lighting	Special
S	= 350 MA LED	Amber
T	= 700 MA LED	Amber
U	= 350 MA LED	Clear
V	= 700 MA LED	Clear
W	= 350 MA LED	Special
Y	= 700 MA LED	Special

Metering Type

U	= Unmetered
D	= Digital electronic meters (side one)
T	= Digital electronic meters (side two)
B	= Digital electronic meters (both sides)
M	= One meter socket (100 A)
N	= Two meter socket (100 A each)
V	= 200 A meter socket

Sides and Receptacles

R1S1	R2S1	R3S1	R4S1	R1S2	R2S2	R3S2	R4S2
0	0	0	0	0	0	0	0
1	1	1	1	1	1	1	1
2	2	2	2	2	2	2	2
3	3	3	3	3	3	3	3
4	4	4	4	4	4	4	4
5	5	5	5	5	5	5	5
6	6	6	6	6	6	6	6
7	7	7	7	7	7	7	7
8	8	8	8	8	8	8	8

0	= None
1	= 20 A GFI duplex
2	= 30 A, 125 V
3	= 50 A, 125 V
4	= 50 A, 125/250 V
5	= 100 A, 208 V
6	= 100 A, 250 V
7	= 100 A, 277/480 V
8	= 100 A, 480 V

Water Option ①

0	= 0
1	= 1
2	= 2
3	= Single water meter
4	= Dual water meter
5	= Single meter, 2 V

Extra Unmetered GFI Receptacles

0	= None
1	= 1
2	= 2

Phone Cable TV and Internet Options

Phone Jack	Cable TV Jack	Internet Option ②
A = 1	0	0
B = 1	0	1
C = 1	0	2
D = 1	1	0
E = 1	1	1
F = 1	1	2
G = 1	2	0
H = 1	2	1
I = 1	2	2
J = 2	0	0
K = 2	0	1
L = 2	0	2
M = 2	1	0
N = 2	1	1
O = 2	1	2
P = 2	2	0
Q = 2	2	1
R = 2	2	2
S = 0	2	2
T = 0	0	1
U = 0	0	2
V = 0	1	0
W = 0	1	1
X = 0	1	2
Y = 0	2	0
Z = 0	2	1
0 = 0	0	0

Bus

S	= Single-phase 3/8-inch copper busbar
F	= Three-phase 3/8-inch copper busbar
C	= Single-phase 3/8-inch Canadian busbar
T	= Three-phase 3/8-inch Canadian busbar
M	= Single-phase 300 kcmil mechanical lug bus
Z	= Three-phase 300 kcmil mechanical lug bus
L	= Single-phase 350 kcmil mechanical lug bus
P	= Three-phase 350 kcmil mechanical lug bus
N	= Single-phase 1/4-inch copper busbar
Q	= Single-phase 1/4-inch split mechanical busbar
D	= Dual-phase busbar

Receptacles: R1S1 = Receptacle 1, Side 1
R2S1 = Receptacle 2, Side 1
R3S1 = Receptacle 3, Side 1
R4S1 = Receptacle 3, Side 1
R1S2 = Receptacle 1, Side 2
R2S2 = Receptacle 2, Side 2
R3S2 = Receptacle 3, Side 2
R4S2 = Receptacle 3, Side 2

Notes

① Number represents the quantity of 1/4-turn ball valves with 3/4-inch hose bibs.

② Number represents the quantity of RJ-45 high-speed Internet jacks.

Internet option also available. Contact factory for details.

Accessories

See **Page V1-T5-75**.

Dimensions

Approximate Dimensions in Inches (mm)

Admiral–SS

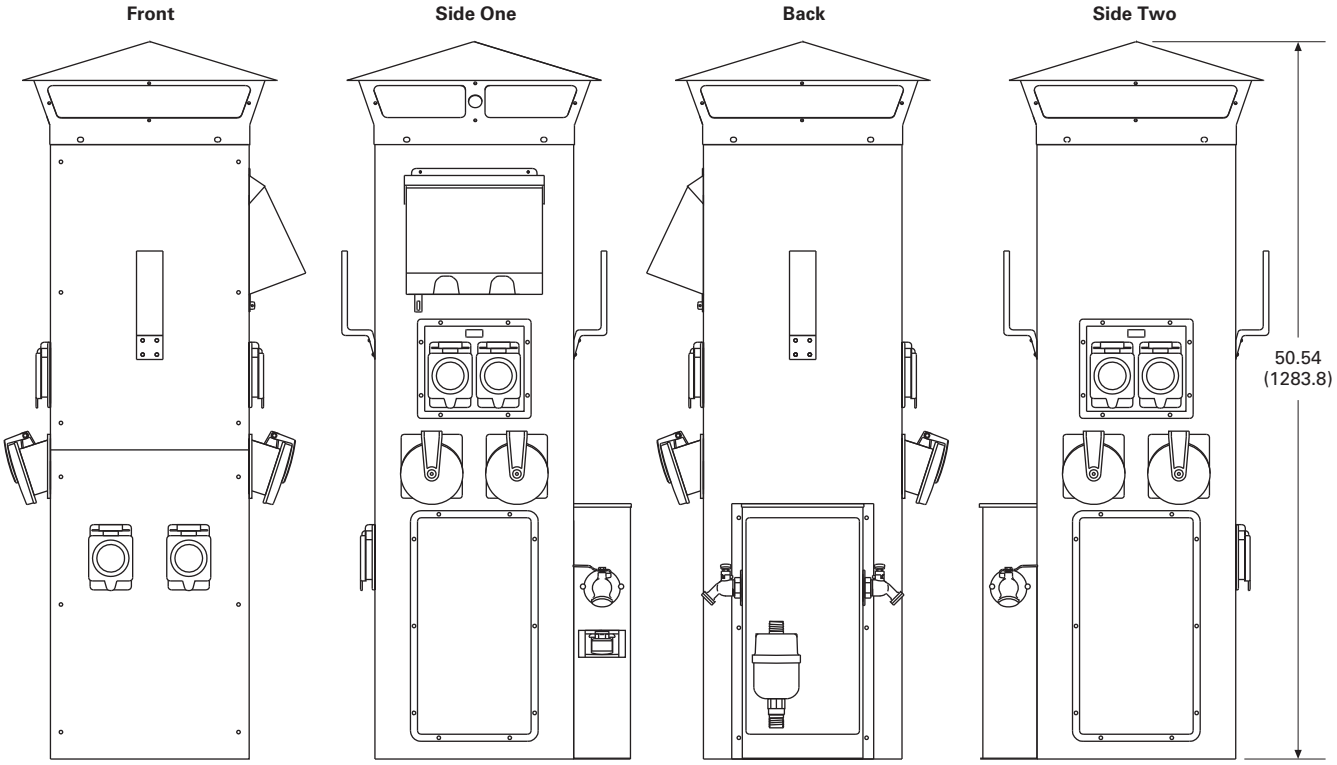

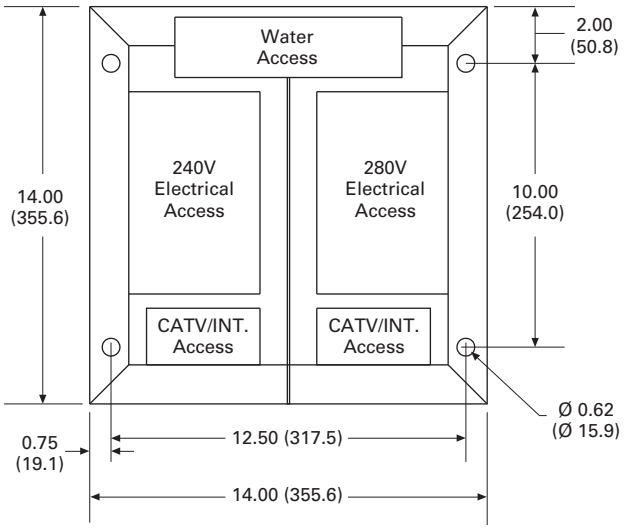

Base Footprint

Newport Harbor Mate

Contents

Description	*Page*
Power Pedestals	**V1-T5-51**
Lighthouse	**V1-T5-54**
Lighthouse–SS	**V1-T5-58**
Admiral–SS	**V1-T5-62**
Newport Harbor Mate	
Available Options	**V1-T5-66**
Catalog Number Selection	**V1-T5-67**
Accessories	**V1-T5-68**
Dimensions	**V1-T5-68**
Hatteras Light	**V1-T5-69**
Firehouse	**V1-T5-73**
Smart Start	**V1-T5-79**
Mariner	**V1-T5-80**
Digital Electronic Kilowatthour Meters	**V1-T5-81**
Distribution Equipment—Ground Fault Monitor	**V1-T5-82**
Distribution Equipment—Mega Yacht Powerpoint	**V1-T5-83**
Distribution Equipment—Substations	**V1-T5-86**
Distribution Equipment—Panels	**V1-T5-89**
Distribution Equipment—Transformers	**V1-T5-90**

Newport Harbor Mate

Product Description

Five years of development and 30 prototype models have yielded this unit the most innovative mini-power center available. Host to a variety of electrical services, contained in a compact yet strong housing, the Newport Harbor Mate is packed with features.

Features, Benefits and Functions

- Tough and durable resin housing with UV inhibitor for lasting finish
- Photocell controlled 7 and 9 watt fluorescent light (clear lens or amber lens for bug reduction)
- Designed to mount on a dock box, piling or stainless steel stand
- Copper busbar with a maximum rating of 140 A

Newport Harbor Mate (Shown with Optional Stand)

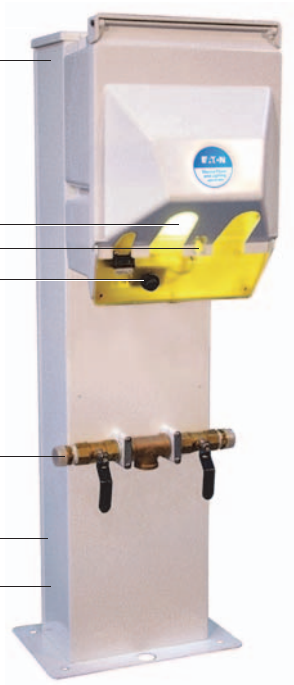

Available Options

- Available with single, dual or combination of 30 A or 50 A receptacles
- 20 A / 125 V GFI receptacle (max. of two GFI receptacles per pedestal)

Note: 20 A GFI receptacles are not to be used for shore power.

- Single or dual phone, cable TV, high-speed Internet connections
- Electronic metering (one or two element meters available)
- 316L stainless steel stand
- LED lighting

Mounting Option

Backlit Faceplate

Catalog Number Selection

N A Y B U 4 3 0 1 1 2 W M

Type
- **N** = NP Harbor Mate
- **C** = NP Camp Mate

Photocell
- **Y** = Yes
- **N** = No

Lighting and Lens Color

A = 7 W light	Amber
C = 9 W light	Amber
F = No lighting	Amber
G = 7 W light	Clear
I = 9 W light	Clear
L = No lighting	Clear
M = 7 W light	Special
O = 9 W light	Special
R = No lighting	Special
S = 350 MA LED	Amber
T = 700 MA LED	Amber
U = 350 MA LED	Clear
V = 700 MA LED	Clear
W = 350 MA LED	Special
Y = 700 MA LED	Special

Lighting Protection
- **B** = Breaker protected
- **F** = Fuse protected

Metering Type ①
- **U** = Unmetered
- **D** = Digital electronic meters
- **R** = Receptacles metered individually

Sides and Receptacles

R1S1	R2S1	R3S1
0	**0**	**0**
1	**1**	**1**
2	**2**	
3	**3**	
4	**4**	

- **0** = None
- **1** = 20 A GFI duplex
- **2** = 30 A, 125 V
- **3** = 50 A, 125 V
- **4** = 50 A, 125/250 V

Stand
- **0** = 0
- **1** = 1

Water Option ②
- **0** = 0
- **1** = 1
- **2** = 2

Hard Wired Breakers

S1
- **0** = None
- **2** = 20 A, two-pole
- **3** = 30 A

Bus
- **S** = Single-phase 1/4-inch copper busbar
- **F** = Three-phase 1/4-inch copper busbar
- **C** = Single-phase 1/4-inch Canadian busbar
- **M** = Mechanical lug 2/0
- **Q** = Single-phase 1/4-inch split mechanical busbar (with stand ONLY)
- **A** = 1/4-inch Canadian mechanical

Phone Cable TV and Internet Options

	Phone Jack	Cable TV Jack	Internet Option
A =	1	0	0
B =	1	0	1
C =	1	0	2
D =	1	1	0
E =	1	1	1 (Camp Mate only)
T =	0	0	1
V =	0	1	0
W =	0	1	1
0 =	0	0	0

Receptacles: R1 = Receptacle 1
R2 = Receptacle 2

Notes

① 20 A GFIs not metered.

② Number represents the quantity of 1/4-turn ball valves with 3/4-inch hose bibs (with stand only).

Accessories

See **Page V1-T5-75**.

Dimensions

Approximate Dimensions in Inches (mm)

Newport Harbor Mate

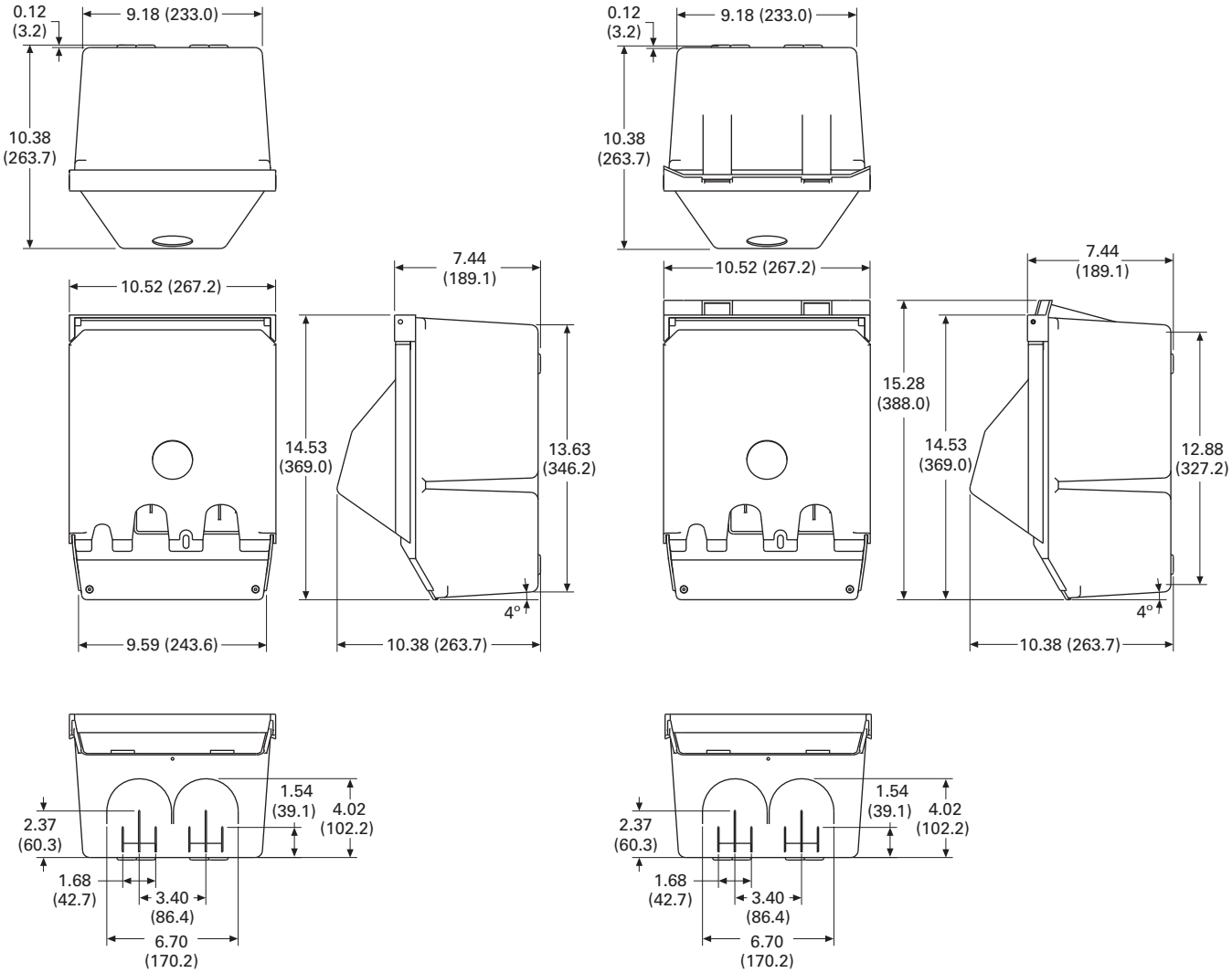

Newport Redesign

Newport Redesign With Meters

Hatteras Light

Contents

Description	*Page*
Power Pedestals	**V1-T5-51**
Lighthouse	**V1-T5-54**
Lighthouse–SS	**V1-T5-58**
Admiral–SS	**V1-T5-62**
Newport Harbor Mate	**V1-T5-65**
Hatteras Light	
Available Options	**V1-T5-70**
Catalog Number Selection	**V1-T5-71**
Accessories	**V1-T5-72**
Dimensions	**V1-T5-72**
Firehouse	**V1-T5-73**
Smart Start	**V1-T5-79**
Mariner	**V1-T5-80**
Digital Electronic Kilowatthour Meters	**V1-T5-81**
Distribution Equipment—Ground Fault Monitor	**V1-T5-82**
Distribution Equipment—Mega Yacht Powerpoint	**V1-T5-83**
Distribution Equipment—Substations	**V1-T5-86**
Distribution Equipment—Panels	**V1-T5-89**
Distribution Equipment—Transformers	**V1-T5-90**

Hatteras Light

Product Description

The Hatteras® Light is an elegant and low cost alternative to the Lighthouse. It uses the same 360 degree light assembly as the Lighthouse, yet is only 30 inches tall. Thousands of these attractive pedestals are found not only in marinas, but also around pools, deck areas, boardwalks and landscape areas. The housing will never rust or corrode and comes with a limited lifetime warranty. This unit is popular for smaller slips at marinas with the Lighthouse and for private docks.

Note: Wireless remote reading of electronic kilowatt meters.

Note: Clear lens.

Note: Custom paint color.

Features, Benefits and Functions

- Photocell controlled 13 watt fluorescent light (clear lens or amber lens for bug reduction)
- Circuit breakers
- Heavy resin housing with a two-part polyurethane coating for a UV resistant, long-lasting finish
- Copper busbar with a maximum rating of 140 A

Hatteras Light

Available Options

- 20 A / 125 V GFI receptacle (max. of two GFI receptacles per pedestal)

Note: 20 A GFI receptacles are not to be used for shore power.

- Digital electronic metering (one or two element meter available)
- Single or dual phone, cable TV, high-speed Internet connections
- Single or dual 1/2-inch or 3/4-inch silcock with stainless steel handles
- LED lighting

Copper Busbar with Ratings up to 140 A

20 A / 125 A GFI Receptacle

Faceplate

Catalog Number Selection

H D Y B D 4 7 0 1 2 A M

Type

H	= Hatteras Light
R	= Park Light

Photocell

Y	= Yes
N	= No

Lighting Protection

B	= Breaker protected
F	= Fuse protected

Metering Type ①

U	= Unmetered
D	= Digital electronic meters
R	= Receptacles metered individually

Lighting and Lens Color

A	= 7 W light	Amber
B	= Dual 7 W light	Amber
C	= 9 W light	Amber
D	= 13 W light	Amber
E	= Dual 13 W light	Amber
F	= No lighting	Amber
G	= 7 W light	Clear
H	= Dual 7 W light	Clear
I	= 9 W light	Clear
J	= 13 W light	Clear
K	= Dual 13 W light	Clear
L	= No lighting	Clear
M	= 7 W light	Special
N	= Dual 7 W light	Special
O	= 9 W light	Special
P	= 13 W light	Special
Q	= Dual 13 W light	Special
R	= No lighting	Special
S	= 350 MA LED	Amber
T	= 700 MA LED	Amber
U	= 350 MA LED	Clear
V	= 700 MA LED	Clear
W	= 350 MA LED	Special
Y	= 700 MA LED	Special

Sides and Receptacles

R1S1	R2S1	R1S2
0	**0**	**0**
1	**1**	**1**
2	**2**	**2**
3	**3**	**3**
4	**4**	**4**

0	= None
1	= 20 A GFI duplex
2	= 30 A, 125 V
3	= 50 A, 125 V
4	= 50 A, 125/250 V

Water Option ②

0	= 0
1	= 1 (1/2-inch)
2	= 2 (1/2-inch)
3	= 1 (3/4-inch)
4	= 2 (3/4-inch)

Hard Wired Breakers

S1	
0	= None
2	= 20 A, two-pole
3	= 30 A

Bus

S	= Single-phase 1/4-inch copper busbar
F	= Three-phase 1/4-inch copper busbar
C	= Single-phase 1/4-inch Canadian busbar
M	= Mechanical lug 2/0 ③
A	= 1/4-inch Canadian mechanical

Phone Cable TV and Internet Options

	Phone Jack	Cable TV Jack	Internet Option
A =	1	0	0
B =	1	0	1
C =	1	0	2
D =	1	1	0
E =	1	1	1
F =	1	1	2
G =	1	2	0
H =	1	2	1
I =	1	2	2
J =	2	0	0
M =	2	1	0
P =	2	2	0
S =	0	2	2
T =	0	0	1
U =	0	0	2
V =	0	1	0
W =	0	1	1
X =	0	1	2
Y =	0	2	0
Z =	0	2	1

Receptacles: R1 = Receptacle 1
R2 = Receptacle 2

Notes

① 20 A GFIs not metered.
② Number represents the quantity of 1/4-turn ball valves with 3/4-inch hose bibs.
③ Wire size #2/0 kcmil or less.

Accessories

See **Page V1-T5-75**.

Dimensions

Approximate Dimensions in Inches (mm)

Hatteras

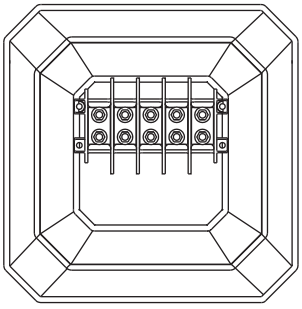

Busbar Access Top Removed

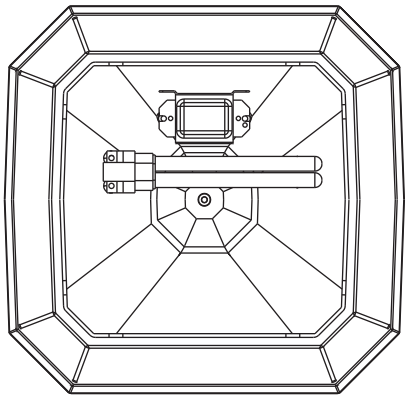

Inside Top

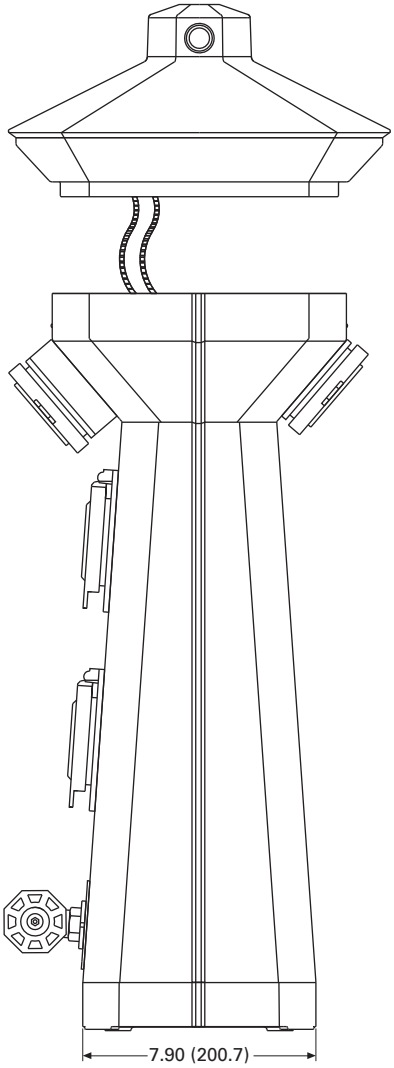

Side View

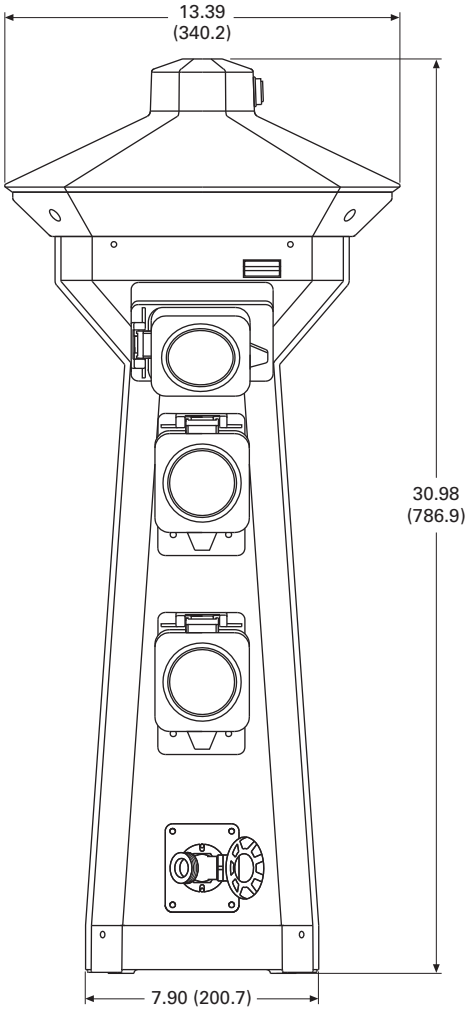

Front View

Firehouse

Contents

Description	*Page*
Power Pedestals	V1-T5-51
Lighthouse	V1-T5-54
Lighthouse–SS	V1-T5-58
Admiral–SS	V1-T5-62
Newport Harbor Mate	V1-T5-65
Hatteras Light	V1-T5-69
Firehouse	
Available Options	V1-T5-74
Catalog Number Selection	V1-T5-74
Accessories	V1-T5-75
Dimensions	V1-T5-78
Smart Start	V1-T5-79
Mariner	V1-T5-80
Digital Electronic Kilowatthour Meters	V1-T5-81
Distribution Equipment—Ground Fault Monitor	V1-T5-82
Distribution Equipment—Mega Yacht Powerpoint	V1-T5-83
Distribution Equipment—Substations	V1-T5-86
Distribution Equipment—Panels	V1-T5-89
Distribution Equipment—Transformers	V1-T5-90

Firehouse

Product Description

Created as a complete solution for fire and rescue needs, this pedestal features fire extinguisher storage and a mounted alarm strobe light and siren, as well as an optional life ring. This unit is well equipped for any marina emergency. The alarm strobe light and siren can be automatically activated when the door is open or optional life ring is removed.

Features, Benefits and Functions

- Alarm strobe light and siren: automatically activated when door is open or optional life ring is removed
- Photocell controlled 13 watt fluorescent light (clear lens or amber lens for bug reduction)
- 10 lb ABC Type fire extinguisher
- 316L stainless steel polyester powder-coated housing
- Polycarbonate top assembly

Firehouse

Available Options

- 24-inch life ring
- 20 lb ABC Type fire extinguisher available

Catalog Number Selection

F A Y A E N

Type
F = Firehouse

Photocell
Y = Yes
N = No

Alarm/Strobe
A = Include alarm/strobe
N = No alarm/strobe

Fire Extinguisher
E = Include 10 lb extinguisher
N = No extinguisher
X = Include 20 lb extinguisher

24-Inch Life Ring
R = Include life ring
N = No life ring

Lighting and Lens Color

A = 7 W light	Amber	**I** = 9 W light	Clear	**Q** = Dual 13 W light	Special
B = Dual 7 W light	Amber	**J** = 13 W light	Clear	**R** = No lighting	Special
C = 9 W light	Amber	**K** = Dual 13 W light	Clear	**S** = 350 MA LED	Amber
D = 13 W light	Amber	**L** = No lighting	Clear	**T** = 700 MA LED	Amber
E = Dual 13 W light	Amber	**M** = 7 W light	Special	**U** = 350 MA LED	Clear
F = No lighting	Amber	**N** = Dual 7 W light	Special	**V** = 700 MA LED	Clear
G = 7 W light	Clear	**O** = 9 W light	Special	**W** = 350 MA LED	Special
H = Dual 7 W light	Clear	**P** = 13 W light	Special	**Y** = 700 MA LED	Special

Accessories

Accessories for Custom Design Marina Products, Resin and Stainless Steel Pedestals and Power Products

Replacement Parts Catalog Numbers

Description	Catalog Number
Receptacles	
20 A GFCI duplex	**MPL3038**
30 A 125 V twistlock	**MPL3039**
50 A 125 V twistlock	**MPL3040**
50 A 125/250 V twistlock	**MPL3045**
100 A 120/240 V pin and sleeve	**MPL4100R12W**
100 A 120/208 pin and sleeve	**MPL5100R9W**
100 A 480 V four-wire pin and sleeve	**MPL4100R7W**
100 A 480 V five-wire pin and sleeve	**MPL5100R7W**
200 A 277/480 V pin and sleeve (Russellstoll®)	**MPL4200R7W**
30 A 125 V RV	**RV3042**
50 A 125/250 V RV	**RV3043**
Circuit Breakers	
20 A 125 V single-pole	**QCF1020**
20 A 125 V single-pole GFCI	**QCGF1020**
30 A 125 V single-pole	**QCF1030**
30 A 125 V single-pole GFCI	**QCGF1030**
50 A 125 V single-pole	**QCF1050**
20 A 125/250 V two-pole	**QCF2020**
20 A 125/250 V two-pole GFCI	**QCGF2020**
30 A 125/250 V two-pole	**QCF2030**
30 A 125/250 V two-pole GFCI	**QCGF2030**
50 A 125/250 V two-pole	**QCF2050**
50 A 125/250 V two-pole GFCI	**QCGF2050**
60 A 125/250 V two-pole	**QCF2060**
100 A 125/250 V two-pole	**GHC2100D**
100 A 120/208 V three-pole	**GHC3100D**
200 A 277/480 V three-pole	**JT2200FA**
Fluorescent Light Assembly	
13 watt 120 V 60 Hz ballast	**MPL2400**
7 watt 120 V 60 Hz ballast	**MPL2401**
13 watt socket	**MPL3079**
7 watt socket	**MPL3077**
13 watt fluorescent bulb	**MPL3018**
7 watt fluorescent bulb	**MPL3019**
Photocell	**MPL3044**
Photocell nuts	**MPL3034**
Lighthouse in-line fuse	**MPL3026**
Lighthouse in-line fuse holder	**MPL3027**
Lighthouse, Lighthouse–SS, Powerhouse, Powerhouse–SS, Hatteras, Park Light	
Top with complete light and lens assembly	**MPL6003A**
Top with complete light and lens assembly—fused	**MPL6003FA**
Top only	**MPL6003**
Amber lens	**MPL6005**
Clear lens	**MPL6008**

Replacement Parts Catalog Numbers, continued

Description	Catalog Number
Lighthouse, Lighthouse–SS, Powerhouse, Powerhouse–SS, Hatteras, Park Light, continued	
20 A GFCI receptacle external cover set	**MPL1101**
30 A receptacle external cover set	**MPL1102**
50 A receptacle external cover set	**MPL1105**
Single-pole external breaker cover set	**MPL11061**
Two-pole external breaker cover set	**MPL11062**
Three-pole external breaker cover set	**MPL11063**
Lighthouse, Lighthouse–SS, Powerhouse, Powerhouse–SS	
Lighthouse/Powerhouse pedestal main housing	**MPL6006**
Lighthouse–SS/Powerhouse–SS pedestal main housing	**MPL6006S**
Lighthouse/Powerhouse main door	**MPL6007**
Lighthouse–SS/Powerhouse–SS main door	**MPL6007S**
Lighthouse/Powerhouse spring closure	**MPL1099**
Lighthouse Powerhouse top isolation plate	**MPL6012**
Lighthouse/Lighthouse–SS breaker plate	**MPL1141**
Powerhouse/Powerhouse–SS breaker plate	**RV1112**
Lighthouse/Lighthouse–SS/Powerhouse/ Powerhouse–SS Hose and cable brackets	**MPL1087**
Lighthouse/Powerhouse stainless steel hinge	**MPL1088**
Lighthouse/Powerhouse complete pedestal base with busbar assembly	**MPL6004A**
Lighthouse/Powerhouse complete pedestal base with three-phase busbar assembly	**MPL6004FA**
Lighthouse/Powerhouse pedestal base without busbars	**MPL6004**
Lighthouse/Powerhouse aluminum blank access panel	**MPL5500**
Lighthouse/Lighthouse–SS/Powerhouse/ Powerhouse–SS complete busbar assembly	**MPL1140A**
Lighthouse/Lighthouse–SS/Powerhouse/Powerhouse–SS complete three-phase busbar assembly	**MPL1140FA**
Copper busbar with nuts and washers	**MPL3471**
20 A GFCI—00 amber resin faceplate	**MPL1120**
30 A—20 GFCI amber resin faceplate	**MPL1121**
30–50 A amber resin faceplate	**MPL1122**
30–30 A amber resin faceplate	**MPL1127**
30–00 A amber resin faceplate	**MPL1129**
50–50 A amber resin faceplate	**MPL1123**
50 A—20 GFCI amber resin faceplate	**MPL1124**
20 GFCI—20 GFCI amber resin faceplate	**MPL1125**
00–00 amber resin faceplate	**MPL1126**
50 A—00 amber resin faceplate	**MPL1128**
100 A faceplate	**MPL1142**
20 A GFCI—00 amber resin faceplate assembly with breakers	**MPL1120A**
30 A—20 GFCI amber resin faceplate assembly with breakers	**MPL1121A**
30–50 A amber resin faceplate assembly with breakers	**MPL1122A**

Replacement Parts Catalog Numbers, continued

Description	Catalog Number
Lighthouse, Lighthouse–SS, Powerhouse, Powerhouse–SS, continued	
30–30 A amber resin faceplate assembly with breakers	**MPL1127A**
50–50 A amber resin faceplate assembly with breakers	**MPL1123A**
50 A—20 GFCI amber resin faceplate assembly with breakers	**MPL1124A**
20 GFCI—20 GFCI amber resin faceplate assembly with breakers	**MPL1125A**
50 A—00 amber resin faceplate assembly with breakers	**MPL1128A**
30–00 A faceplate assembly with breakers	**MPL1129A**
100 A faceplate assembly with breakers	**MPL1142A**
Powerhouse 30–50 receptacle plate	**RV1143**
Powerhouse (30 A—00) receptacle plate	**RV11433**
Powerhouse (50 A—00) receptacle plate	**RV11435**
Powerhouse breaker plate	**RV1112**
Phone, Cable, Internet Assemblies	
Lighthouse/Powerhouse complete phone and cable assembly	**MPL1114/RV1114**
Lighthouse–SS/Powerhouse–SS/Hatteras Light/Park Light complete phone and cable assembly	**MPL1119/RV1119**
Hatteras Light/Park Light complete phone and cable assembly	**MPL1119**
Newport Harbor Mate/Camp Mate phone and cable insert assembly	**MPL1115/RV1115**
Lighthouse/Powerhouse access plates with dual Internet jacks	**MPL5501**
Coax cable TV FCF female adpt. with lugnut and washer	**MPL1086**
RJ45 CAT5e high-speed internet jack	**MPL3059**
Marine phone receptacle	**MPL3037**
RJ12 CAT3 phone jack	**RV3060**
Water Assemblies	
Lighthouse/Powerhouse complete water manifold assembly (dual 3/4-inch hose bibs with 1/4-turn ball valves)	**MPL11A**
Newport Harbor Mate/Newport Camp Mate water manifold assembly (dual 3/4-inch hose bibs with 1/4-turn ball valves)	**MPL11C**
3/4-inch hose adapter	**MPL7030**
Lighthouse/Powerhouse water mounting plate with mounting brackets	**MPL1132**
Hatteras Light/Park Light aluminum water mounting plate	**MPL6584**
1/2-inch brass silcock (hose bib)	**MPL7014**
3/4-inch stainless steel silcock (hose bib)	**MPL5271**
3/4-inch brass ball valve	**MPL7021**
Watts 3/4-inch backflow preventer	**MPL7015**

Replacement Parts Catalog Numbers, continued

Description	Catalog Number
Digital Electronic Meters	
Single element, 14-pin quick disconnect (no CTs)	**MPL17A1**
Single element, 14-pin quick disconnect (with CTs)	**MPL17A2** ①
Single element, 14-pin quick disconnect (with CTs)	**MPL17A2** ②
Dual element, 14-pin quick disconnect (no CTs)	**MPL17B1**
Dual element, 14-pin quick disconnect (with CTs)	**MPL17B2** ①
Dual element, 14-pin quick disconnect (with CTs)	**MPL17B2** ②
Three element, 14-pin quick disconnect (no CTs)	**MPL17C1**
Three element, 14-pin quick disconnect (with CTs)	**MPL17C2** ①
Three element, 14-pin quick disconnect (with CTs)	**MPL17C2** ②
Single element coil transformers (CTs)	**MPL30321** ①
Single element coil transformers (CTs)	**MPL30321** ②
Dual element coil transformers (CTs)	**MPL30322** ①
Dual element coil transformers (CTs)	**MPL30322** ②
Three element coil transformers (CTs)	**MPL30323** ①
Three element coil transformers (CTs)	**MPL30323** ②
Counter (large—old style)	**MPL3022**
Counter (small—new style)	**MPL3021**
Hatteras Light (Marina) and Park Light (RV) ③	
Pedestal main housing	**MPL6002**
Copper busbar with nuts and washers	**MPL3468**
Complete busbar assembly	**MPL1108A**
Complete three-phase busbar assembly	**MPL1108FA**
20 A GFCI external cover door	**MPL1101**
30 A external cover door	**MPL1102**
50 A external cover door	**MPL1105**
Light fuse	**MPL3026**
Fuse holder	**MPL3027**
Mounting feet (set of four)	**MPL7004**

Notes

① Lighthouse, Lighthouse–SS, Powerhouse, Powerhouse–SS.
② Hatteras Light, Park Light, Newport Camp Mate, Newport Harbor Mate.
③ Please contact factory to determine configurations for replacement housing.

Replacement Parts Catalog Numbers, continued

Description	Catalog Number
Newport Harbor Mate (Marina) and Camp Mate (RV)	
Amber lens—three-piece	**MPL1117**
Clear lens—three-piece	**MPL1109**
Main housing	**MPL6000**
Main door	**MPL6001**
30–30 A faceplate ①	**MPL1135**
30–50 A faceplate ①	**MPL1136**
50–50 A faceplate ①	**MPL1137**
50 A–00 faceplate ①	**MPL1138**
30 A–00 faceplate ①	**MPL1139**
30–30 A faceplate assembly with breakers ①	**MPL1135A**
30–30–20 GFI faceplate assembly ①	**MPL1135G/RV1135G**
30–50 A faceplate assembly with breakers ①	**MPL1136A**
30–50–20 GFI faceplate assembly ①	**MPL1136G/RV1136G**
50–50 A faceplate assembly with breakers ①	**MPL1137A**
50–50–20 GFI faceplate assembly ①	**MPL1137G/RV1137G**
50 A–00 faceplate assembly with breakers ①	**MPL1138A**
50–20 GFI faceplate assembly ①	**MPL1138G/RV1138G**
30 A–00 faceplate assembly with breakers ①	**MPL1139A**
30–20 GFI faceplate assembly ①	**MPL1139G/RV1139G**
Mounting brackets	**MPL7005**
36-inch stainless steel stand	**MPL5506**
Copper busbar with nuts and washers	**MPL3468**
Complete busbar assembly	**MPL1108A**
Complete three-phase busbar assembly	**MPL1108FA**
Firehouse (Marina and RV)	
Red strobe light/siren	**MPL3020**
Firehouse top with lighting assembly and strobe	**MPLFH6003A**
Light fuse	**MPL3029**
Fuse holder	**MPL3028**
Door	**MPL6013**
24-inch life ring	**MPL4201**
Life ring bracket	**MPL4201B**
Blank access panel	**MPL6015**
Door/life ring switch (pre-2004)	**MPL3030**
Door/life ring switch (new)	**MPL3050**
Door hasp	**MPL3950**
Busbar (double barrel terminal block)	**MPL3751**
10-lb ABC Type fire extinguisher	**MPL8025**
20-lb ABC Type fire extinguisher	**MPL8025X**

Note

① For custom faceplates to include phone/cable or other accessories, please contact Eaton's Marina Power & Lighting facility at 1-800-723-8009.

Dimensions

Approximate Dimensions in Inches (mm)

Firehouse–SS

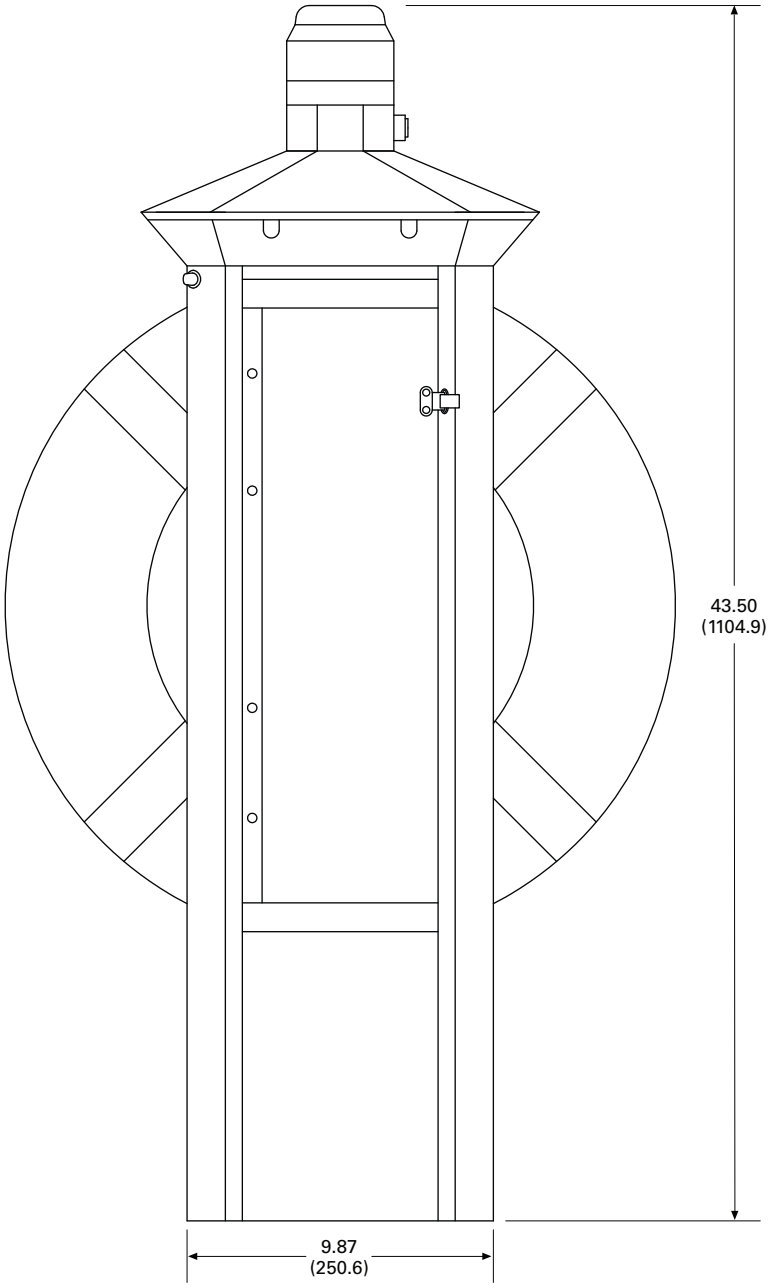

Smart Start

Contents

Description	*Page*
Power Pedestals	**V1-T5-51**
Lighthouse	**V1-T5-54**
Lighthouse–SS	**V1-T5-58**
Admiral–SS	**V1-T5-62**
Newport Harbor Mate	**V1-T5-65**
Hatteras Light	**V1-T5-69**
Firehouse	**V1-T5-73**
Smart Start	
Mariner	**V1-T5-80**
Digital Electronic Kilowatthour Meters	**V1-T5-81**
Distribution Equipment—Ground Fault Monitor	**V1-T5-82**
Distribution Equipment—Mega Yacht Powerpoint	**V1-T5-83**
Distribution Equipment—Substations	**V1-T5-86**
Distribution Equipment—Panels	**V1-T5-89**
Distribution Equipment—Transformers	**V1-T5-90**

Smart Start

Product Description

If you have transient boat slips, Eaton Marina Power and Lighting has developed their newest product for your situation.

The new "Smart Start" pedestal is activated by the swipe of a credit card. A kiosk will be centrally located at the marina and will control up to 32 power pedestals. When a boater wants to use a slip, they will enter the slip number and amount of time they would like and will then be asked to swipe a card in order to activate the pedestal. Once the chosen time is up, the pedestal will shut down. No more free power!

The "Smart Start" pedestal will not only prevent transient boaters from stealing power, but it will also eliminate the need for 24-hour monitoring of the slips. Boaters will be able to come in at any time of the day and activate a pedestal.

Features

- Lighted 316L stainless steel kiosk enclosure
- Programmable slip time blocks
- Programmable slip rates printable receipts

Standards and Certifications

- UL listing pending

Listed

Dimensions

Approximate Dimensions in Inches (mm)

Smart Start

Height	60.05 (1525.3)
Width	14.15 (359.4)
Depth	14.24 (361.9)

Marina Power and Lighting Equipment

Mariner

Contents

Description	*Page*
Power Pedestals	**V1-T5-51**
Lighthouse	**V1-T5-54**
Lighthouse–SS	**V1-T5-58**
Admiral–SS	**V1-T5-62**
Newport Harbor Mate	**V1-T5-65**
Hatteras Light	**V1-T5-69**
Firehouse	**V1-T5-73**
Smart Start	**V1-T5-79**
Mariner	
Digital Electronic Kilowatthour Meters	**V1-T5-81**
Distribution Equipment—Ground Fault Monitor	**V1-T5-82**
Distribution Equipment—Mega Yacht Powerpoint	**V1-T5-83**
Distribution Equipment—Substations	**V1-T5-86**
Distribution Equipment—Panels	**V1-T5-89**
Distribution Equipment—Transformers	**V1-T5-90**

Mariner

Product Description

The Mariner is a lighting bollard that can stand from 1.5 to 4 feet tall and can be used in various applications from marina docks, to landscaped areas, golf courses and beyond. The Mariner will have a lifetime warranty on the engineered resin housing that will withstand the harsh marine and land environments from Alaska to the tropics.

Features

- Can be configured with a 7 watt, 9 watt or 13 watt fluorescent bulb
- Mounting base and painted pole supplied for desired height
- Limited lifetime warranty on engineered resin housing
- Custom colors available
- Side-mounted option

Dimensions

Approximate Dimensions in Inches (mm)

Mariner

7 watt	14.15 (359.4)
9 watt/13 watt	14.24 (361.9)

Mounting Base and Pole

1.5 feet–4 feet

Catalog Number Selection

M 5 A R 18

Type
M = Mariner

Bulb Wattage
5 = 5 W
7 = 7 W
9 = 9 W
3 = 13 W
1 = 50 MA LED

Color Lens
A = Amber
C = Clear
S = Special

Color
W = White
R = Blue
B = Black
D = Dark green
S = Special

Stand Height
18 = 18-inch
24 = 24-inch
36 = 36-inch
48 = 48-inch

Digital Electronic Kilowatt Hour Meters

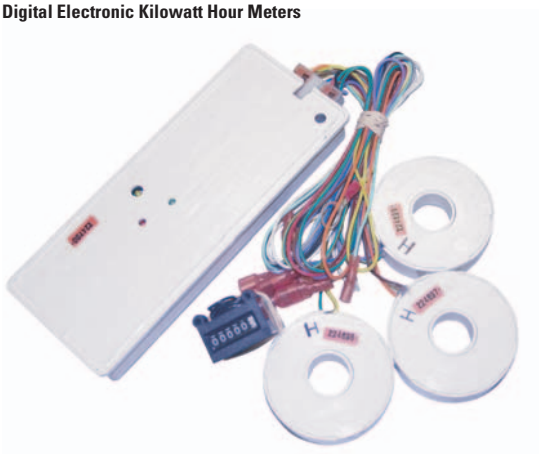

Contents

Description	*Page*
Power Pedestals	**V1-T5-51**
Lighthouse	**V1-T5-54**
Lighthouse–SS	**V1-T5-58**
Admiral–SS	**V1-T5-62**
Newport Harbor Mate	**V1-T5-65**
Hatteras Light	**V1-T5-69**
Firehouse	**V1-T5-73**
Smart Start	**V1-T5-79**
Mariner	**V1-T5-80**
Digital Electronic Kilowatthour Meters	
Distribution Equipment—Ground Fault Monitor	**V1-T5-82**
Distribution Equipment—Mega Yacht Powerpoint	**V1-T5-83**
Distribution Equipment—Substations	**V1-T5-86**
Distribution Equipment—Panels	**V1-T5-89**
Distribution Equipment—Transformers	**V1-T5-90**

Digital Electronic Kilowatthour Meters

Product Description

Using the latest surface mount technology, Eaton manufactures a digital electronic kilowatthour meter that exceeds the +/– 2% accuracy required by ANSI (American National Standards Institute) C-12.1 and is approved by the state of California at +/– 1% over the full range of 0–100 A from a 0.5–1 power factor and is available for both single- and three-phase applications.

The meter drives an electro-mechanical counter that requires a 12 V pulse each tenth of a kilowatthour, providing 10 pulses per kilowatt used. The meter output can be hard wired or connected to a transmitter in the pedestal for wireless transmission to a receiver displaying the output on a PC for direct billing of up to 1,000 individual customers.

Features

Our meter is designed to be user friendly in that all connections from external sources and the meter output are through one 14-pin locking connector. This feature eliminates many common problems, such as reverse line polarity and improper coil polarity. Simple LEDs, both red and green, indicate line and load condition and the pulsed LED indicates the rate of power consumption.

Wireless System

All of our meters are "wireless capable" to allow for wireless meter reading. This technology enables the marina or RV park to get meter readings from one central location rather than visiting every site to read the counters.

Meter Socket Capabilities

Meter sockets are available on the Lighthouse and Lighthouse–SS.

Standard

- Four jaw
- Ring-type
- 100 A

Available Options

- 200 A (SS only)
- Lockable hasp
- Ringless (SS only)
- Five jaw
- Seven jaw (SS only)

Product Selection

One Element Meter

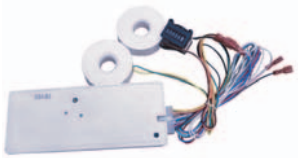

Two Element Meter

Three Element Meter

Ground Fault Monitor

Contents

Description	*Page*
Power Pedestals	**V1-T5-51**
Lighthouse	**V1-T5-54**
Lighthouse–SS	**V1-T5-58**
Admiral–SS	**V1-T5-62**
Newport Harbor Mate	**V1-T5-65**
Hatteras Light	**V1-T5-69**
Firehouse	**V1-T5-73**
Smart Start	**V1-T5-79**
Mariner	**V1-T5-80**
Digital Electronic Kilowatthour Meters	**V1-T5-81**
Distribution Equipment—Ground Fault Monitor	
Distribution Equipment—Mega Yacht Powerpoint	**V1-T5-83**
Distribution Equipment—Substations	**V1-T5-86**
Distribution Equipment—Panels	**V1-T5-89**
Distribution Equipment—Transformers	**V1-T5-90**

Distribution Equipment—Ground Fault Monitor

Product Description

Our ground fault monitoring systems are designed to detect fault currents in the AC shore power system that are too low to trip a circuit breaker. The ground fault monitor helps reduce the risk of injury or property damage that may result from stray fault currents. Our ground fault monitoring system provides information to the maintenance staff on the overall condition of the AC electrical system. The ground fault monitoring system operates 24 hours a day and can be monitored by non-technical personnel.

Features

- Adjustable trip level 10 mA to 10 A
- Current transformers up to 8 1/4-inch diameter
- Visual and/or audible alarm
- Housing of fiberglass or powder-coated stainless steel available

Power Guard

The ground fault monitor detects ground fault currents by means of current transformers (CT), which are placed around main or branch circuits. If a ground fault occurs, the CT will detect the amount of fault current and send a signal to the ground fault monitoring device where the amount of fault current is displayed with the faulty circuit identified. The detected fault can either activate an indicator alarm or disconnect the faulted circuit.

Standards and Certifications

- UL listed current transformers

Listed

Marina Power and Lighting Equipment

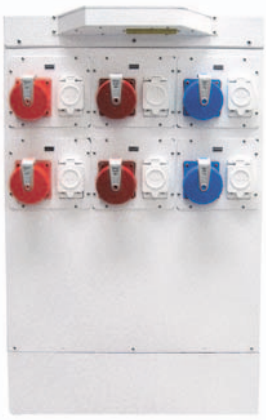

Contents

Description	*Page*
Power Pedestals	**V1-T5-51**
Lighthouse	**V1-T5-54**
Lighthouse–SS	**V1-T5-58**
Admiral–SS	**V1-T5-62**
Newport Harbor Mate	**V1-T5-65**
Hatteras Light	**V1-T5-69**
Firehouse	**V1-T5-73**
Smart Start	**V1-T5-79**
Mariner	**V1-T5-80**
Digital Electronic Kilowatthour Meters	**V1-T5-81**
Distribution Equipment—Ground Fault Monitor	**V1-T5-82**
Distribution Equipment—Mega Yacht Powerpoint	
Wiring Diagram	**V1-T5-84**
Dimensions	**V1-T5-85**
Distribution Equipment—Substations	**V1-T5-86**
Distribution Equipment—Panels	**V1-T5-89**
Distribution Equipment—Transformers	**V1-T5-90**

Distribution Equipment—Mega Yacht Powerpoint

Product Description

From the company that is known for its high-quality innovations, Eaton is the only company to offer a self-contained dual-phase mega yacht unit. Made out of long-lasting stainless steel, this mega yacht unit has a copper-wound, low-noise transformer that is double insulated and epoxy overcoated.The mega yacht unit delivers both single-phase and three-phase power to serve most mega yachts. Helping to keep your marina environment tranquil, the mega yacht unit has a low-noise, highly efficient transformer that has isolation mounts to ensure a very quiet operation.

Features

- Thermostatically controlled fans in transformer compartment for cooling
- Heavy stainless steel (316L) cabinet with a polyester powder coating
- Ventilated sun shields to help unit run cooler in tropical climates
- Limited lifetime warranty on housing
- Two or three light 13 watt photocell controlled fluorescent lights on the sun shield for optimal night lighting

Available Options

- 200 A–480 V three-phase receptacles
- 100% rated breakers
- Hard wiring busbars for all voltages with breaker protection
- Two 3/4 inch water outlets with a water meter
- Two phone, two CATV and two CAT5 high-speed Internet connections
- Digital electronic meters on all receptacles
- Primary breaker
- Two 480 V delta or wye 125 A three-phase receptacles (IEC)
- Two 120/208 V 100 A three-phase receptacles (IEC)
- Two 120/240 V 100 A single-phase receptacles (IEC)
- Up to four 50 A 120/240 V locking receptacles (NEMA)
- Up to four 30 A 120 V locking receptacles (NEMA)
- Wireless remote metering for electric and water
- 20 A GFI receptacle
- Primary side 480 V maximum 600 A
- Secondary side single-phase 120/240 V maximum 100 kVA
- Secondary side three-phase 120/208 V maximum 125 kVA
- Fire extinguisher—10 or 20 lbs

Wiring Diagram

Powerpoint

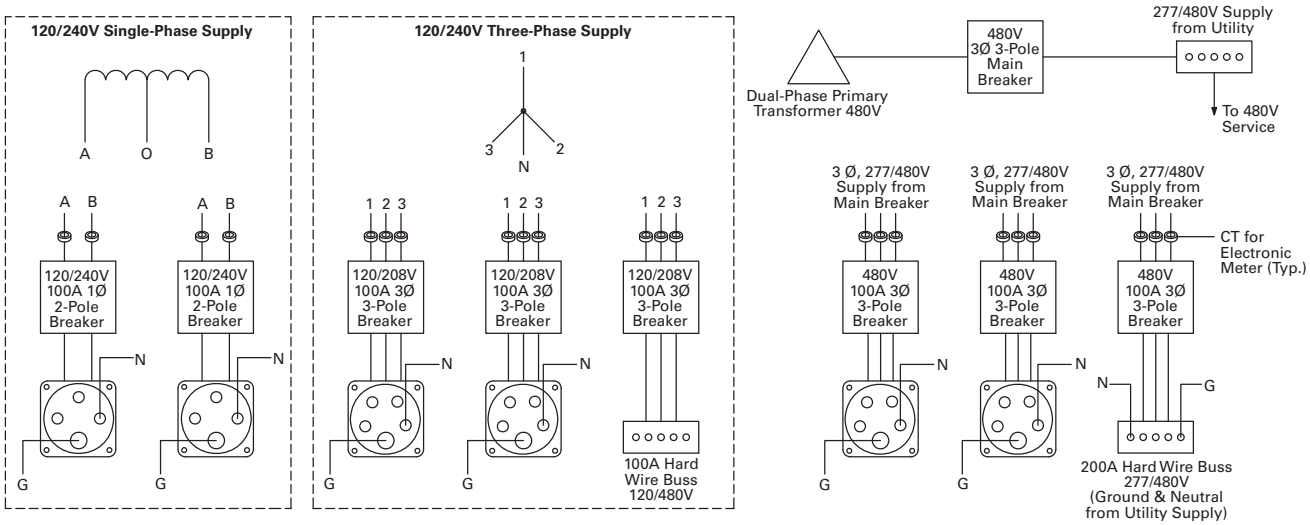

Dimensions

Approximate Dimensions in Inches (mm)

Powerpoint Unit

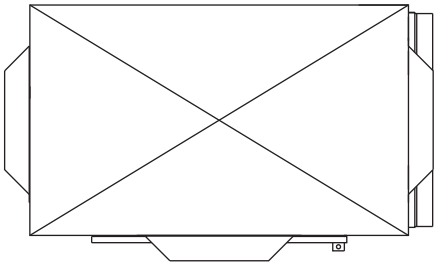

Top With Solar Shield

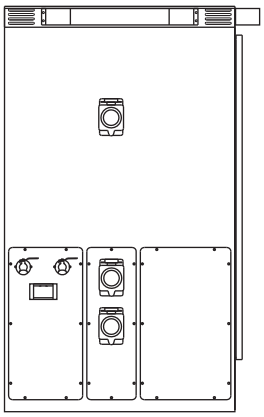

Left Side

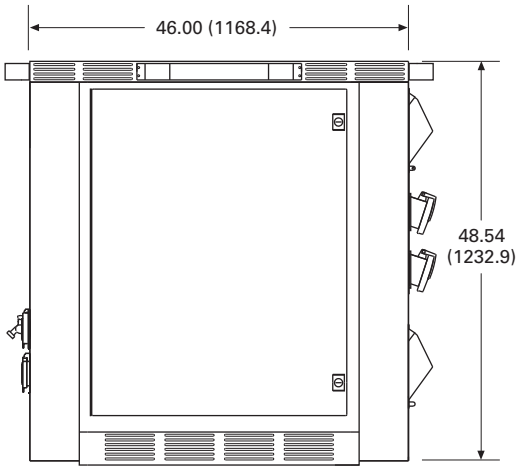

Front

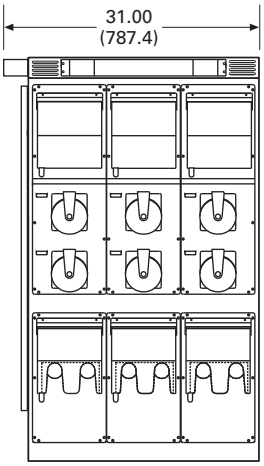

Right Side

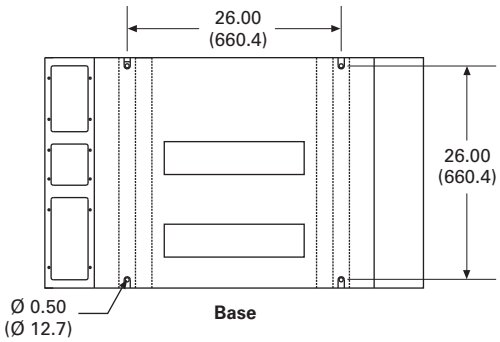

Base

Substations

Double Panel Substation

Contents

Description	*Page*
Power Pedestals	**V1-T5-51**
Lighthouse	**V1-T5-54**
Lighthouse–SS	**V1-T5-58**
Admiral–SS	**V1-T5-62**
Newport Harbor Mate	**V1-T5-65**
Hatteras Light	**V1-T5-69**
Firehouse	**V1-T5-73**
Smart Start	**V1-T5-79**
Mariner	**V1-T5-80**
Digital Electronic Kilowatthour Meters	**V1-T5-81**
Distribution Equipment—Ground Fault Monitor	**V1-T5-82**
Distribution Equipment—Mega Yacht Powerpoint	**V1-T5-83**
Distribution Equipment—Substations	
Features, Benefits and Functions	**V1-T5-87**
Available Options	**V1-T5-88**
Standards and Certifications	**V1-T5-88**
Dimensions	**V1-T5-88**
Distribution Equipment—Panels	**V1-T5-89**
Distribution Equipment—Transformers	**V1-T5-90**

Distribution Equipment—Substations

Product Description

The introduction of substations into the marina and recreational vehicle market allows Eaton to be your complete marina and RV park electrical products supplier. We are able to assist in the design and layout of your marina or RV park electrical system from the primary service provider, to your power pedestal. Our substations are designed for any coastal or inland environment and are constructed of powder-coated stainless steel NEMA 3R housing cabinets. All substation cabinets come with our limited lifetime warranty. All of our substations use Eaton's panels and circuit breakers providing our customers the utmost in circuit protection and quality.

Application Description

The aluminum and Galvaneal cabinets are recommended for inland applications. The substations can be configured with 50–330 kVA single-phase or three-phase copper wound transformers and up to 20 single-phase or 12 three-phase branch breakers. An optional three-sided double-wall cabinet is available that provides air flow between the panels. All substations come standard with temperature controlled cooling fans.

Product Selection Guide

Panel and Transformer Combinations

Panel	Transformer
Single-Phase	
200 A	50 kVA
300 A	75 kVA
400 A	100 kVA
600 A	150 kVA
700 A	167.5 kVA
800 A	200 kVA
1000 A	250 kVA
1200 A	330 kVA
Three-Phase	
100 A	45 kVA
200 A	75 kVA
300 A	112.5 kVA
400 A	150 kVA
600 A	225 kVA
800 A	300 kVA

Features, Benefits and Functions

- Limited lifetime warranty on the housing
- All stainless steel hardware
- Temperature controlled cooling fans in the transformer and circuit breaker compartments
- Lockable door

Ventilation

The substation ventilation is designed to optimize air circulation over and around the transformers and through the panel compartment so that the substation operates at lower temperatures.

Substations come equipped with temperature controlled cooling fans for exhausting hot air from the cabinet and solar shield.

In addition, substations are available with a double-walled cabinet and solar shield, which allow for cooling of both the exterior surface of the cabinet and the internal components.

Substations

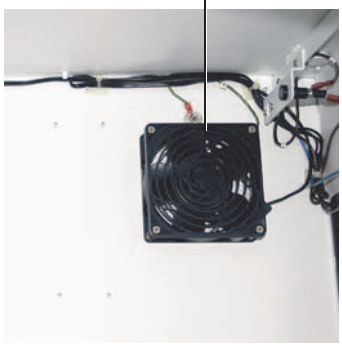

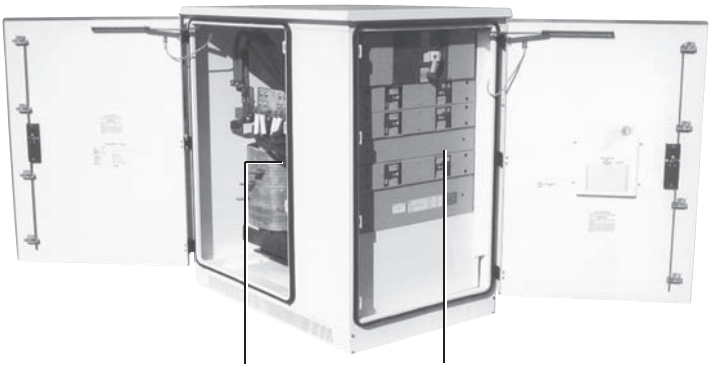

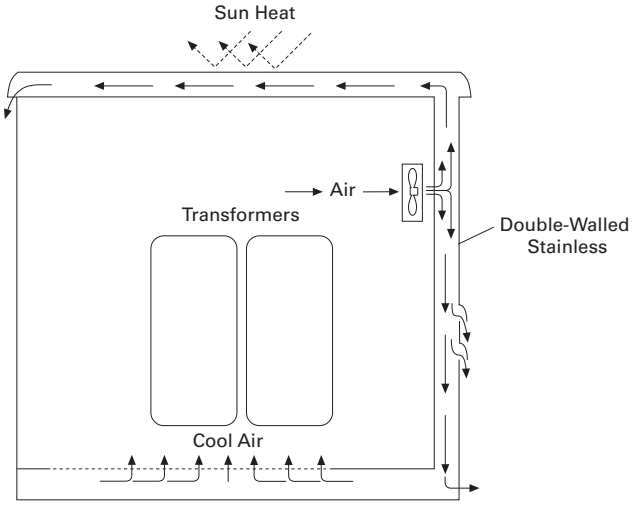

Double-Walled Construction

Available Options

- Powder-coated cabinets made of stainless steel or fiberglass
- Limited lifetime warranty on housing. Transformer and secondary distribution panel in a single enclosure have a one-year limited warranty
- Stainless steel housing and hardware with locking doors
- Single-phase and three-phase models
- Overload capacity meets ANSI L57.96–01.250
- Optional double-walled construction
- Temperature controlled fans for cooling
- Custom-made copper wound single-phase or three-phase transformers from 50–330 kVA
- Up to 1200 A main circuit breaker with 15 single-phase branch circuit breakers or 10 three-phase branch circuit breakers
- Substations can be equipped with photocells to turn on and off lights
- A 20 A GFI can be installed in the cabinet, as well as a ground fault monitoring system

Standards and Certifications

- cULus listed

C UL US
Listed

Dimensions

Approximate Dimensions in Inches (mm)

Substations

Standard Substation	
Height	53.00 (1346.2)
Width	51.00 (1295.4)
Depth	33.00 (838.2)
Side-by-Side Substation	
Height	53.00 (1346.2)
Width	66.00 (1676.4)
Depth	30.00 (762.0)
Double Panel Substation	
Height	53.00 (1346.2)
Width	63.00 (1600.2)
Depth	33.00 (838.2)

Panels

Panel (Stainless Steel Shown)

Contents

Description	*Page*
Power Pedestals	**V1-T5-51**
Lighthouse	**V1-T5-54**
Lighthouse–SS	**V1-T5-58**
Admiral–SS	**V1-T5-62**
Newport Harbor Mate	**V1-T5-65**
Hatteras Light	**V1-T5-69**
Firehouse	**V1-T5-73**
Smart Start	**V1-T5-79**
Mariner	**V1-T5-80**
Digital Electronic Kilowatthour Meters	**V1-T5-81**
Distribution Equipment—Ground Fault Monitor	**V1-T5-82**
Distribution Equipment—Mega Yacht Powerpoint	**V1-T5-83**
Distribution Equipment—Substations	**V1-T5-86**
Distribution Equipment—Panels	
Distribution Equipment—Transformers	**V1-T5-90**

Distribution Equipment—Panels

Product Description

Two of the many products we can offer our customers are Eaton's PRL-3A and PRL-4 panels as standalone units or in one of our substations. All of our busses are made of copper and are load rated; breakers are bolt-on type. Distribution panels can be 120/240 V single-phase, 120/208 V three-phase, 277/480 V three-phase or 220Y/127 V three-phase based on your system requirements. Distribution panels can also have a main breaker or a main lug. Branch circuit breakers are provided based on customer requirements.

Features

- All internal wiring is fine stranded 1000 V insulated copper
- Copper busbars
- All exterior hardware is stainless steel

Available Options

- NEMA 3R or 4X
- Powder-coated stainless steel
- Main breaker up to 1200 A
- Branch breaker 20–1200 A
- Main lug only
- We also offer 480 V models—single-phase and three-phase

Single-Phase

- Up to 1200 A main circuit breakers
- Up to 42 branch circuit breakers

Three-Phase

- Up to 1200 A main circuit breakers
- Up to 42 branch circuit breakers

Standards and Certifications

- UL listed
- cULus listed

UL Listed c UL Listed US

Transformers

Three-Phase Transformer

Contents

Description	*Page*
Power Pedestals	**V1-T5-51**
Lighthouse	**V1-T5-54**
Lighthouse–SS	**V1-T5-58**
Admiral–SS	**V1-T5-62**
Newport Harbor Mate	**V1-T5-65**
Hatteras Light	**V1-T5-69**
Firehouse	**V1-T5-73**
Smart Start	**V1-T5-79**
Mariner	**V1-T5-80**
Digital Electronic Kilowatthour Meters	**V1-T5-81**
Distribution Equipment—Ground Fault Monitor	**V1-T5-82**
Distribution Equipment—Mega Yacht Powerpoint	**V1-T5-83**
Distribution Equipment—Substations	**V1-T5-86**
Distribution Equipment—Panels	**V1-T5-89**
Distribution Equipment—Transformers	

Distribution Equipment—Transformers

Product Description

Because of the high humidity and corrosive conditions of coastal environments, our transformers are wound with Class H heavily insulated copper bar and are double dipped in tough insulating varnish that protects the copper, as well as reduces the hum that is typical in a transformer that is not double dipped. We provide a second overcoat of high temperature epoxy to protect against the severe saltwater environment. We can provide this transformer in single-phase, from 50 to 500 kVA, and three-phase, from 45 to 300 kVA.

Features

- Copper wound transformer coils double dipped in high temperature baking varnish
- All internal wiring is fine stranded 2000 V insulated copper
- Copper busbars
- Marine transformers with epoxy overcoat
- All copper-to-copper connections

Available Options

- Single-phase: 50–500 kVA
- Three-phase: 45–300 kVA
- Epoxy overcoat for non-marine applications

Primary Voltages

- 480 wye three-phase
- 480 V three-phase delta three-wire + ground
- 480 V single-phase two-wire + ground

Secondary Voltages

- 127/220 V three-phase wye four-wire
- 120/208 V three-phase wye four-wire
- 120/240 V single-phase three-wire

Marina Power Distribution Transformer kVA Availabilities

- Single-phase: 50, 75, 100, 150, 167.5, 200, 250, 330, 500 kVA
- Three-phase: 45, 75, 112.5, 150, 225, 300 kVA

Standards and Certifications

- cULus listed

c UL us Listed

Air Conditioning Disconnects

6.1 Air Conditioning Disconnects

Product Description V1-T6-2
Application Description V1-T6-2
Features, Benefits and Functions V1-T6-3
Standards and Certifications V1-T6-3
Product Selection V1-T6-4
Cross-Reference V1-T6-6
Technical Data and Specifications V1-T6-7
Dimensions V1-T6-7

Learn Online

Air Conditioning Disconnects

Fused, Unfused and Molded Case Switch

Complete Line of Fused, Unfused and Molded Case Switch Type Air Conditioning Disconnects

Contents

Description	*Page*
Features, Benefits and Functions	**V1-T6-3**
Standards and Certifications	**V1-T6-3**
Product Selection	**V1-T6-4**
Cross-Reference	**V1-T6-6**
Technical Data and Specifications	**V1-T6-7**
Dimensions	**V1-T6-7**

Product Description

An air conditioning disconnect (ACD) is a disconnect located between a loadcenter (distribution panel) and air conditioner. Eaton's ACD product line provides an installer or repair personnel with a visible disconnecting means when performing maintenance. ACDs are also known as disconnects, pullouts or air conditioning switches.

Non-fused pullout and molded case switch devices provide personnel with a visible ON-OFF disconnecting means. While fused pullout units also perform this function, they also provide an additional level of protection for the air conditioner.

Fused and non-fused devices are of a pullout design, where the user physically removes or "pulls out" a tab to break the electrical connection. A molded case switch is similar to a light switch where the user "switches" the unit to the indicated ON-OFF position.

Fused and Non-Fused Pullouts

- ON/OFF control provided by a pullout handle
- Pullout handle can be conveniently stored in the compartment in the OFF position, helping to prevent the handle from being misplaced
- Protective shield cannot be removed until the pullout handle is removed, disconnecting the power

Molded Case Switch

- Rugged molded case construction in a disconnect switch that looks like a circuit breaker but operates like an ordinary household light switch
- Plug-in molded case switch (included) eliminates the need for pullout handles
- No need for replacement pullout handles due to loss or theft

Application Description

The most widely used application for ACDs is for residential and light commercial air conditioning units. An ACD is installed outdoors, in visible proximity to the air conditioner condensing unit. ACDs are also found in use with heat pumps, swimming pools, spas, whirlpools and pump houses, and meet 2008 NEC Article 422.31 (B) requirements for servicing electric water heaters. Metallic enclosures are galvanized steel and are installed in various locations. Non-metallic enclosures are a plastic (polycarbonate) enclosure commonly used in coastal or salt-water areas.

Features, Benefits and Functions

- Single-phase, two-wire, 240 Vac and three-phase, three-wire, 240 Vac
- NEMA 3R outdoor enclosures offered in metallic and non-metallic versions
- Easy-to-remove high-strength protective shield for easier wiring and mounting
- Easy-to-remove front cover (no screws or fasteners to remove)
- 1-inch knockouts on the bottom, back and side of unit
- Copper-rated line and load lugs that are easily accessible
- Ample wiring space for mounting with a stud gun (single keyhole, two- or three-point mounting)
- Fused devices are service entrance rated

Note: Fused non-metallic units require the addition of **GB4NM** ground bar to obtain a Service Entrance rating.

- Horsepower rated (10 hp maximum at 240 Vac)
- Padlockable door provision for safety and reduction of tampering
- Metallic enclosures are bottom entry and exit only
- Non-metallic enclosures have knockouts and a hub provision for top access
- Non-metallic enclosures have a single unit door and protective shield for installer convenience
- Non-metallic enclosures are durable and provide excellent resistance to climate changes
- Factory-installed tamper-resistant/weather-resistant receptacles are available as an option on some products

Standards and Certifications

- UL listed File No. E132354, E143893, E196365

Contact Eaton for details and part numbers for CSA approved units.

Product Selection

DPU222R

Non-Fused Pullouts

Main Ampere Rating	Maximum hp Rating 120 V	240 V	Wire Size Range Cu/Al 60 °C or 75 °C	Catalog Number
Galvanized Steel				
60	—	10	#14–3	**DPU222R** ①
Non-Metallic/Polycarbonate Enclosure				
60	—	10	#14–2	**ACD222URNM-A2** ①

DPF222R

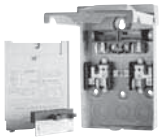

Fused Pullouts

Main Ampere Rating	Maximum hp Rating 120 V	240 V	Wire Size Range Cu/Al 60 °C or 75 °C	Catalog Number
Galvanized Steel				
30 ②	2	3	#14–3	**DPF221R** ①
60 ②	3	10	#14–3	**DPF222R** ①
Non-Metallic				
30	2	3	#14–2	**ACD221RNM-A2** ①
60	3	10	#14–2	**ACD222RNM-A2** ①

For Service Entrance applications, see footnotes below.

DPB222R

Molded Case Switch

Main Ampere Rating	Maximum hp Rating 120 V	240 V	Wire Size Range Cu/Al 60 °C or 75 °C	Catalog Number
Galvanized Steel				
60	—	10	#14–3	**DPB222R** ③
Non-Metallic/Polycarbonate Enclosure				
60	—	10	#14–2	**B60NARNM-A2** ③

Notes

① For replacement pullout head, order part number **96-3258-4**.
② To obtain a Service Entrance Rating, the addition of a **DPFG** (ground bar kit) is required.
③ For replacement molded case switch, order part number **BR260NA**.

DPU222RGF20

ACD with 20 Ampere Ground Fault Receptacle ①

Main Ampere Rating	Maximum hp Rating 120 V	240 V	Wire Size Range Cu/Al 60 °C or 75 °C	Catalog Number
Non-Fused Pullouts				
60	—	10	#14–3	**DPU222RGF20WRTR** ②
60	—	10	#14–3	**DPU222RGF20**
Fused Pullouts				
30	2	3	#14–3	**DPF221RGF20WRTR** ②
30	2	3	#14–3	**DPF221RGF20**
60	3	10	#14–3	**DPF222RGF20WRTR** ②
60	3	10	#14–3	**DPF222RGF20**

DPU222RGF15

ACD with 15 Ampere Ground Fault Receptacle ①③

Main Ampere Rating	Maximum hp Rating 120 V	240 V	Wire Size Range Cu/Al 60 °C or 75 °C	Catalog Number
Non-Fused Pullouts				
60	—	10	#14–3	**DPU222RGF15**
60	—	10	#14–3	**DPU222RGF15WRTR** ②
Fused Pullouts				
30	2	3	#14–3	**DPF221RGF15**
30	2	3	#14–3	**DPF221RGF15WRTR** ②
60	3	10	#14–3	**DPF222RGF15**
60	3	10	#14–3	**DPF222RGF15WRTR** ②

Notes

① Factory-installed GFCI receptacle.
② Includes weather-resistant/tamper-resistant receptacles to meet 2008 NEC Article 406.8 (A) and 406.11 requirements.
③ NEC permits the maximum receptacle rating of a 15 A circuit to be 15 A.

DPU362A

Three-Phase Non-Fused ACD

Main Ampere Rating	Maximum hp Rating 240 V	480 V	Wire Size Range Cu 75 °C	Catalog Number
60	15	30	#14–4	**DPU362RA**

Cross-Reference

Cross-Reference

Description	Catalog Number Eaton	Square D®	GE®	Siemens® (Murray®)	Milbank	Midwest
Metallic/Galvanized Steel Enclosure						
30 A fused	**DPF221R**	—	TF30R	WF2030	U3830	U035F2
60 A fused	**DPF222R**	—	TF60R	WF2060	U3860	U065F1
60 A non-fused	**DPU222R**	—	TFN60R	—	U3800	U065P010
60 A non-fused compact design	**DPU222R**	—	—	WNFC2060	—	—
60 A molded case switch	**DPB222R**	QO200TR	TNA60R1	WNAS2060	—	U065NA1
60 A non-fused with ground fault receptacle	**DPU222RGF**	—	TFN60RGFR	WN2060GFCI	U3822-20GR	U065P010
30 A fused with ground fault receptacle	**DPF221RGF**	—	—	WF2030GFCI	—	U035F010
60 A fused with ground fault receptacle	**DPF222RGF**	—	—	WF2060GFCI	—	U065F010
60 A non-fused with 1/2-inch wire harness	**DPU222R12W** ①	—	—	—	—	—
60 A non-fused with 3/4-inch wire harness	**DPU222R34W** ①	—	—	—	—	—
60 A three-phase 600 V molded case switch	**DPU362RA**	—	—	—	—	U0653F
Non-Metallic/Polycarbonate Enclosure						
30 A fused	**ACD221RNM-A2**	—	TPF30R	WF2030PL	—	P035F
60 A fused	**ACD222RNM-A2**	—	TPF60R	WF2060PL	—	P065F
60 A non-fused	**ACD222URNM-A2**	—	TPN60R1	WN2060PL	—	P065P1
60 A molded case switch	**B60NARNM-A2**	QO200TRNM	TPNA60R1	WNAS2060PL	—	P065NA1
30 A fused with 15 A ground fault receptacle	**DPF221RGF15WRTR**	—	—	—	—	—
30 A fused with 20 A ground fault receptacle	**DPF221RGF20WRTR**	—	—	—	—	—
60 A fused with 15 A ground fault receptacle	**DPF222RGF15WRTR**	—	—	—	—	—
60 A fused with 20 A ground fault receptacle	**DPF222RGF20WRTR**	—	—	—	—	—
60 A non-fused with 15 A ground fault receptacle	**DPU222RGF15WRTR**	—	—	—	—	—
60 A non-fused with 20 A ground fault receptacle	**DPU222RGF20WRTR**	—	—	—	U3822-20GWR	—

Note

① Eaton Quick Pro℠ designated item.

Technical Data and Specifications

- 10,000 amperes rms symmetrical interrupting rating
- Horsepower rated
- Fusible and non-fusible pullout and molded case switch designs
- 30 and 60 amperes available in fusible
- 60 amperes available in non-fusible and molded case switch
- Class H fuse clips provided on fusible pullout design
- WRTR (weather-resistant/ tamper-resistant) receptacle options available

Dimensions

Approximate Dimensions in Inches (mm)

Dimensions and Shipping Carton Information

Catalog Number	Carton Quantity	Dimensions in Inches (mm) Height	Width	Depth	Weight Lbs (kg)
Metallic/Galvanized Steel Enclosure					
DPF221R	10	8.70 (220.9)	5.40 (137.2)	3.15 (80.0)	27 (12)
DPF222R	10	8.70 (220.9)	5.40 (137.2)	3.15 (80.0)	27 (12)
DPU222R	10	8.70 (220.9)	5.40 (137.2)	3.15 (80.0)	27 (12)
DPB222R	10	8.60 (218.4)	5.30 (134.6)	3.74 (95.0)	34 (15)
DPU222R12W ①	1	14.75 (374.6)	12.50 (317.5)	4.00 (101.6)	6 (3)
DPU222R34W ①	1	14.75 (374.6)	12.50 (317.5)	4.00 (101.7)	6 (3)
DPU222RGF20	1	13.00 (330.2)	7.50 (190.5)	4.75 (120.7)	8 (4)
DPF221RGF20	1	13.00 (330.2)	7.50 (190.5)	4.75 (120.7)	8 (4)
DPF222RGF20	1	13.00 (330.2)	7.50 (190.5)	4.75 (120.7)	8 (4)
DPU222RGF15	1	13.00 (330.2)	7.50 (190.5)	4.75 (120.7)	8 (4)
DPF221RGF15	1	13.00 (330.2)	7.50 (190.5)	4.75 (120.7)	8 (4)
DPF222RGF15	1	13.00 (330.2)	7.50 (190.5)	4.75 (120.7)	8 (4)
DPF221RGF15WRTR	1	13.00 (330.2)	7.50 (190.5)	4.75 (120.7)	8 (4)
DPF221RGF20WRTR	1	13.00 (330.2)	7.50 (190.5)	4.75 (120.7)	8 (4)
DPF222RGF15WRTR	1	13.00 (330.2)	7.50 (190.5)	4.75 (120.7)	8 (4)
DPF222RGF20WRTR	1	13.00 (330.2)	7.50 (190.5)	4.75 (120.7)	8 (4)
DPU222RGF15WRTR	1	13.00 (330.2)	7.50 (190.5)	4.75 (120.7)	8 (4)
DPU222RGF20WRTR	1	13.00 (330.2)	7.50 (190.5)	4.75 (120.7)	8 (4)
DPU362R	1	8.60 (218.4)	5.30 (134.6)	3.74 (94.9)	4 (2)
Non-Metallic/Polycarbonate Enclosure					
ACD221RNM-A2	10	8.63 (219.0)	6.26 (159.0)	4.33 (109.9)	15 (7)
ACD222RNM-A2	10	8.63 (219.0)	6.26 (159.0)	4.33 (109.9)	15 (7)
ACD222URNM-A2	10	8.63 (219.0)	6.26 (159.0)	4.33 (109.9)	15 (7)
B60NARNM-A2	10	8.63 (219.0)	6.26 (159.0)	4.33 (109.9)	18 (8)

Note

① Eaton Quick Pro designated item.

Approximate Dimensions in Inches (mm)

DPF221R, DPF222R, DPU222R, DPU222R12W and DPU222R34W

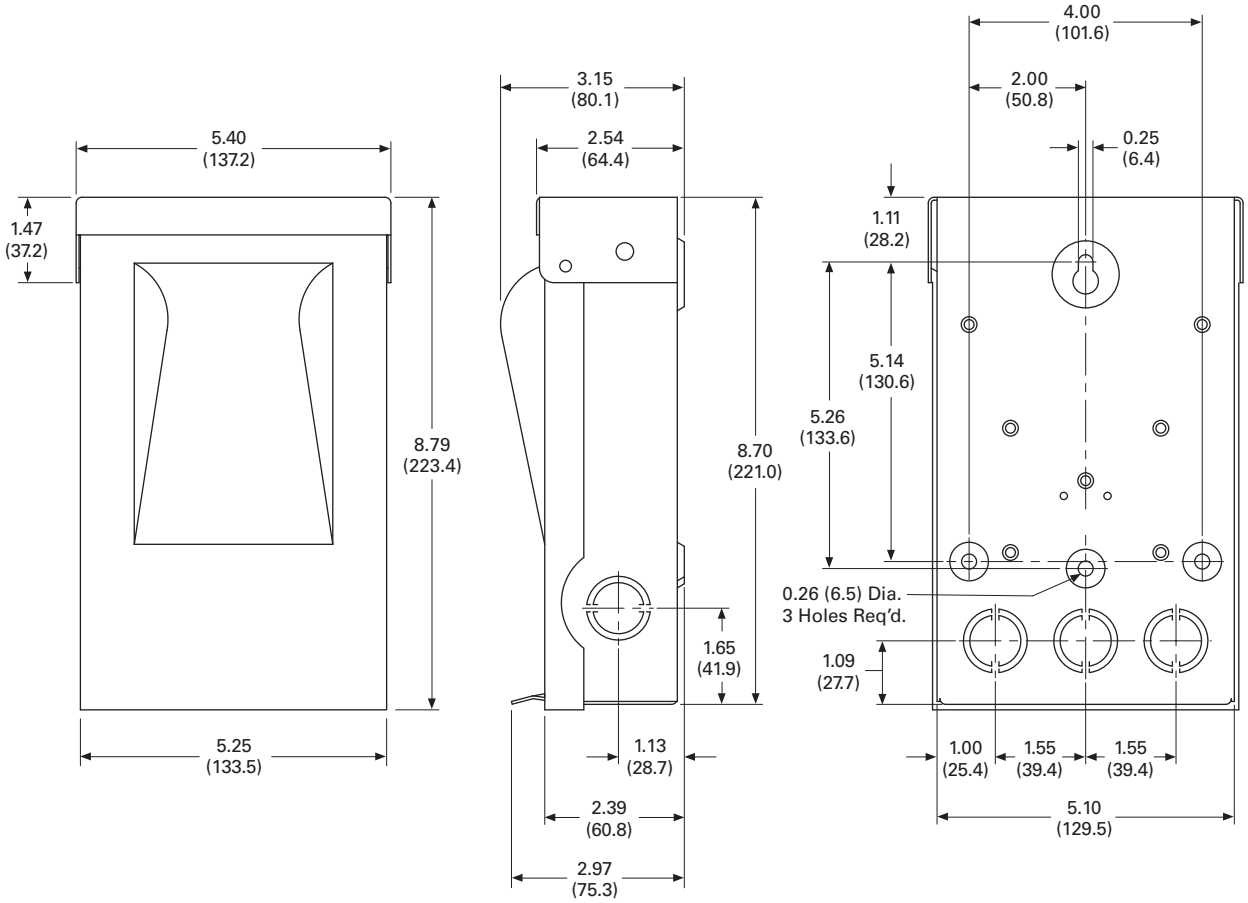

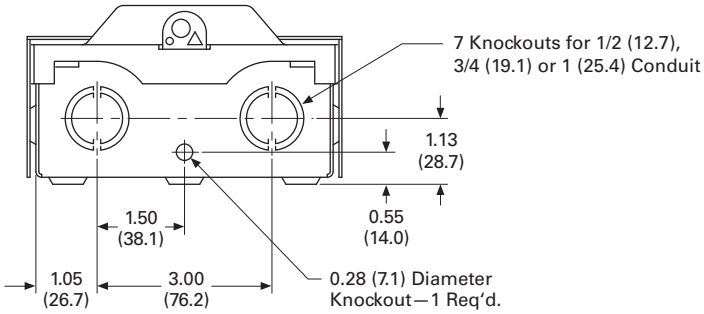

Approximate Dimensions in Inches (mm)

ACD221RNM-A2, ACD222RNM-A2, ACD222URNM-A2 and B60NARNM-A2

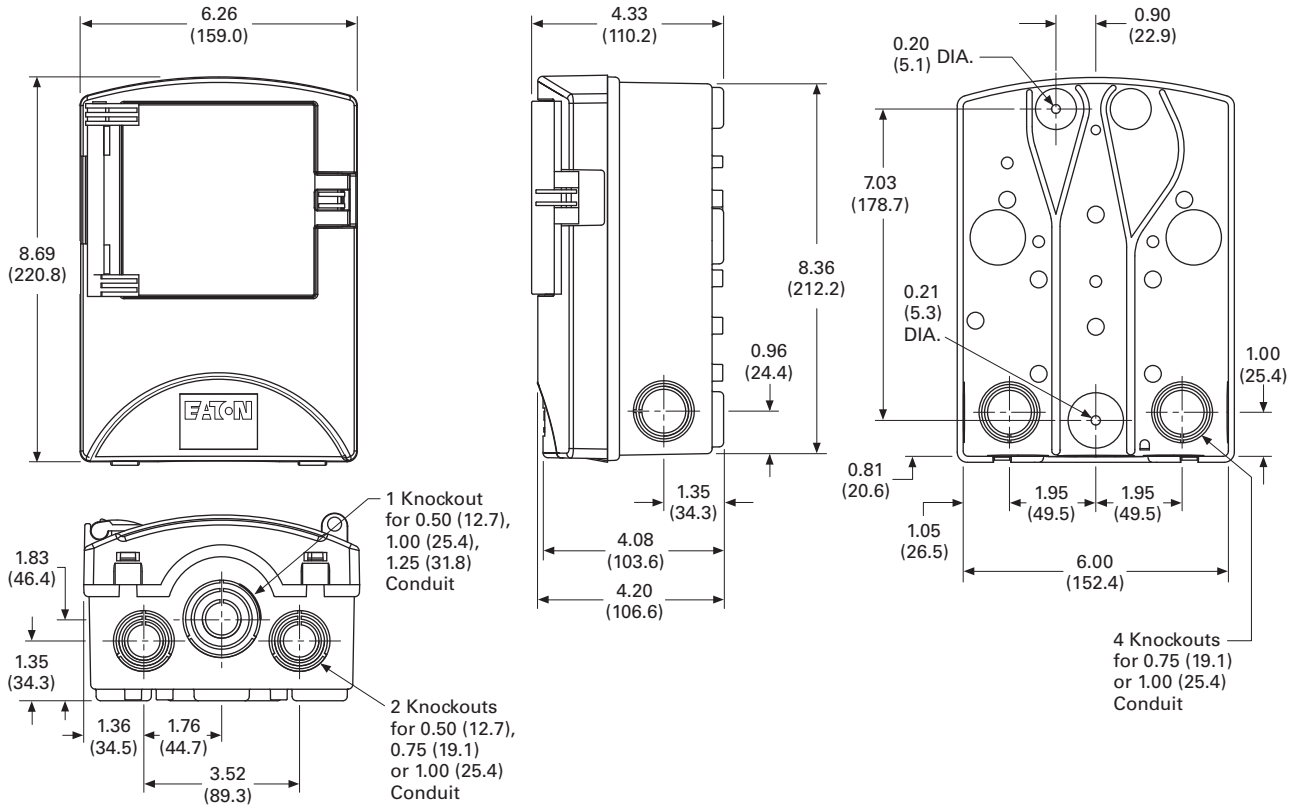

DPB222R and DPU362A

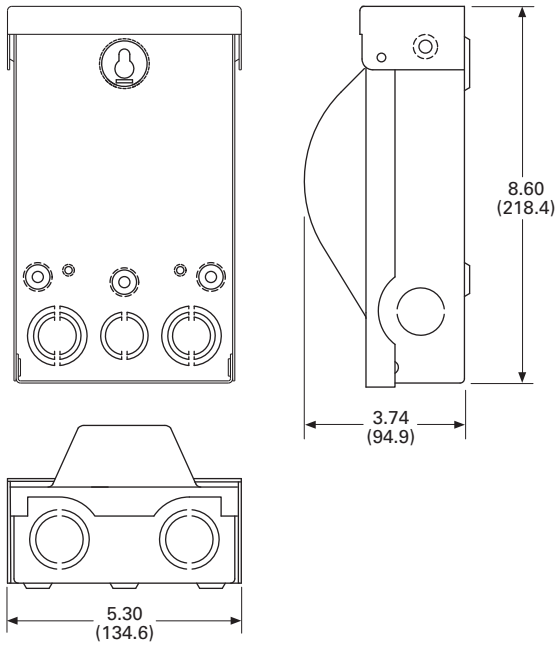

Approximate Dimensions in Inches (mm)

DPU222RGF20, DPF221RGF20, DPF222RGF20, DPU222RGF15, DPF221RGF15, DPF222RGF15, DPF221RGF15WRTR, DPF221RGF20WRTR, DPF222RGF15WRTR, DPF222RGF20WRTR, DPU222RGF15WRTR and DPU222RGF20WRTR

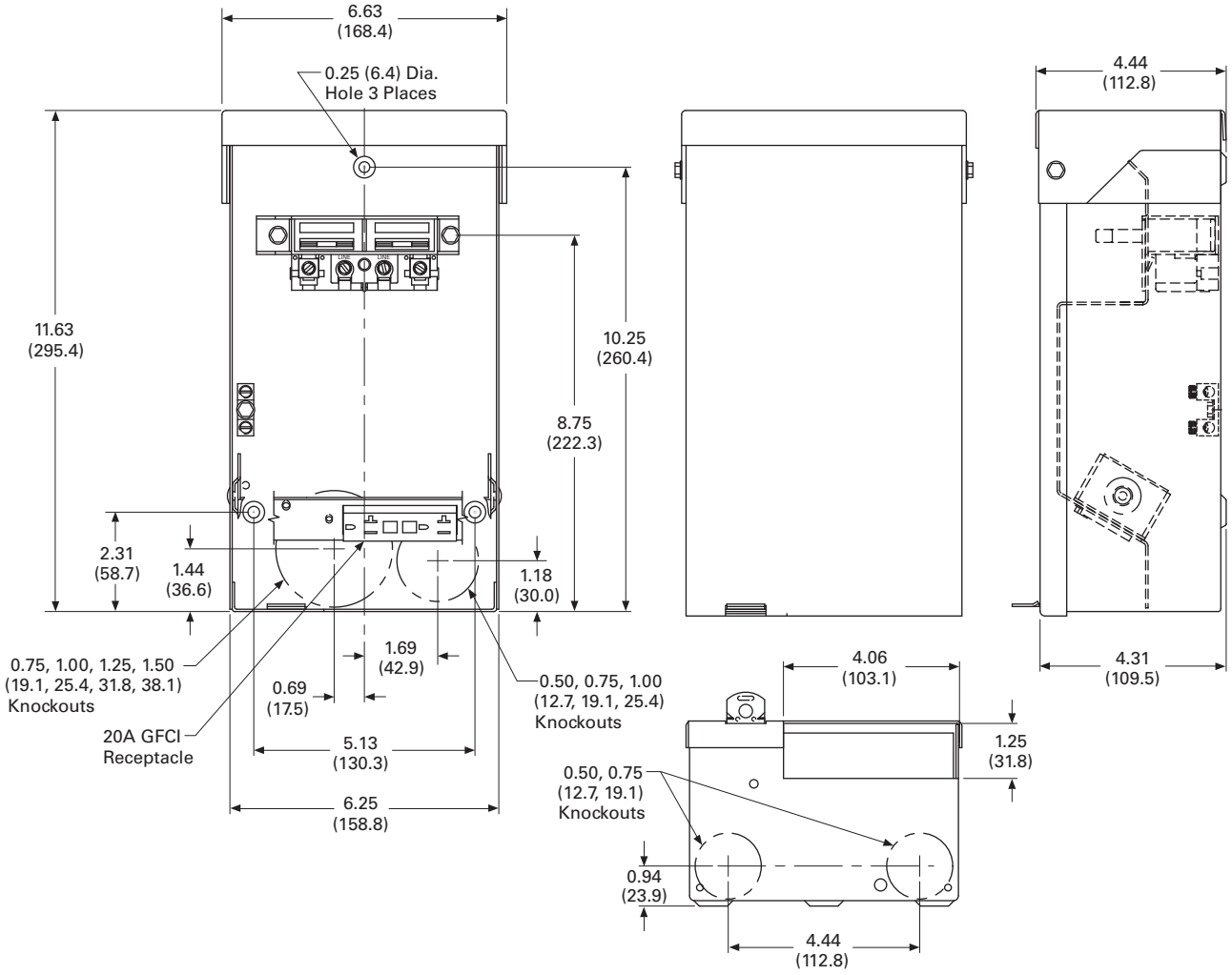

Effective Date: November 1, 2008

Eaton Terms & Conditions

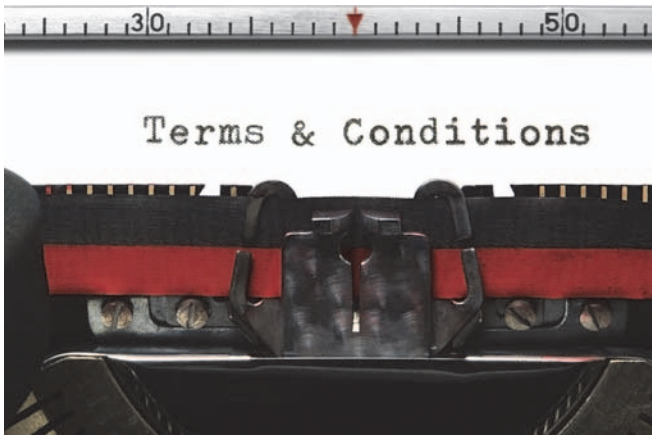

Contents

Description	*Page*
Terms and Conditions of Sale	**V1-A1-1**
Terms of Payment	**V1-A1-2**
Freight	**V1-A1-3**
Warranty	**V1-A1-3**

Selling Policy (Supersedes Selling Policy 25-000, dated February 20, 2006)

Terms and Conditions of Sale

The Terms and Conditions of Sale set forth herein, and any supplements which may be attached hereto, constitute the full and final expression of the contract for the sale of products or services (hereinafter referred to as Product(s) or Services by Eaton Corporation (hereinafter referred to as Seller) to the Buyer, and supersedes all prior quotations, purchase orders, correspondence or communications whether written or oral between the Seller and the Buyer. Notwithstanding any contrary language in the Buyer's purchase order, correspondence or other form of acknowledgment, Buyer shall be bound by these Terms and Conditions of Sale when it sends a purchase order or otherwise indicates acceptance of this contract, or when it accepts delivery from Seller of the Products or Services.

THE CONTRACT FOR SALE OF THE PRODUCTS OR SERVICES IS EXPRESSLY LIMITED TO THE TERMS AND CONDITIONS OF SALE STATED HEREIN. ANY ADDITIONAL OR DIFFERENT TERMS PROPOSED BY BUYER ARE REJECTED UNLESS EXPRESSLY AGREED TO IN WRITING BY SELLER. No contract shall exist except as herein provided.

Complete Agreement

No amendment or modification hereto nor any statement, representation or warranty not contained herein shall be binding on the Seller unless made in writing by an authorized representative of the Seller. Prior dealings, usage of the trade or a course of performance shall not be relevant to determine the meaning of this contract even though the accepting or acquiescing party had knowledge of the nature of the performance and opportunity for objection.

Quotations

Written quotations are valid for 30 days from its date unless otherwise stated in the quotation or terminated sooner by notice.

Verbal quotations, unless accepted, expire the same day they are made.

A complete signed order must be received by Seller within 20 calendar days of notification of award, otherwise the price and shipment will be subject to re-negotiation.

Termination and Cancellation

Any order may be terminated by the Buyer only by written notice and upon payment of reasonable termination charges, including all costs plus profit.

Seller shall have the right to cancel any order at any time by written notice if Buyer breaches any of the terms hereof, becomes the subject of any proceeding under state or federal law for the relief of debtors, or otherwise becomes insolvent or bankrupt, generally does not pay its debts as they become due or makes an assignment for the benefit of creditors.

Appendix 1—Eaton Terms & Conditions

Effective Date: November 1, 2008

Prices

All prices are subject to change without notice. In the event of a price change, the effective date of the change will be the date of the new price or discount sheet, letter or telegram. All quotations made or orders accepted after the effective date will be on the new basis. For existing orders, the price of the unshipped portion of an order will be the price in effect at time of shipment.

Price Policy—Products and Services

When prices are quoted as firm for quoted shipment, they are firm provided the following conditions are met:

1. The order is released with complete engineering details.
2. Shipment of Products are made, and Services purchased are provided within the quoted lead time.
3. When drawings for approval are required for any Products, the drawings applicable to those Products must be returned within 30* calendar days from the date of the original mailing of the drawings by Seller. The return drawings must be released for manufacture and shipment and must be marked "APPROVED" or "APPROVED AS NOTED." Drawing re-submittals which are required for any other reason than to correct Seller errors will not extend the 30-day period.

   * 60 days for orders through contractors to allow time for their review and approval before and after transmitting them to their customers.

If the Buyer initiates or in any way causes delays in shipment, provision of Services or return of approval drawings beyond the periods stated above, the price of the Products or Services will be increased 1% per month or fraction thereof up to a maximum of 18 months from the date of the Buyer's order. For delays resulting in shipment or provision of Services beyond 18 months from the date of the Buyer's order, the price must be renegotiated.

Price Policy—BLS

Refer to Price Policy 25-050.

Minimum Billing

Orders less than $1,000 will be assessed a shipping and handling charge of 5% of the price of the order, with a minimum charge of $25.00 unless noted differently on Product discount sheets.

Taxes

The price does not include any taxes. Buyer shall be responsible for the payment of all taxes applicable to, or arising from the transaction, the Products, its sale, value, or use, or any Services performed in connection therewith regardless of the person or entity actually taxed.

Terms of Payment

Products

Acceptance of all orders is subject to the Buyer meeting Seller's credit requirements. Terms of payment are subject to change for failure to meet such requirements. Seller reserves the right at any time to demand full or partial payment before proceeding with a contract of sale as a result of changes in the financial condition of the Buyer. Terms of Payment are either Net 30 days from the date of invoice of each shipment or carry a cash discount based on Product type. Specific payment terms for Products are outlined in the applicable Product discount schedules.

Services

Terms of payment are net within 30 days from date of invoice for orders amounting to less than $50,000.00.

Terms of payment for orders exceeding $50,000.00 shall be made according to the following:

1. Twenty percent (20%) of order value with the purchase order payable 30 days from date of invoice.
2. Eighty percent (80%) of order value in equal monthly payments over the performance period payable 30 days from date of invoice.

Except for work performed (i) under a firm fixed price basis or (ii) pursuant to terms of a previously priced existing contract between Seller and Buyer, invoices for work performed by Seller shall have added and noted on each invoice a charge of 3% (over and above the price of the work) which is related to Seller compliance with present and proposed environmental, health, and safety regulations associated with prescribed requirements covering hazardous materials management and employee training, communications, personal protective equipment, documentation and record keeping associated therewith.

Adequate Assurances

If, in the judgment of Seller, the financial condition of the Buyer, at any time during the period of the contract, does not justify the terms of payment specified, Seller may require full or partial payment in advance.

Delayed Payment

If payments are not made in accordance with these terms, a service charge will, without prejudice to the right of Seller to immediate payment, be added in an amount equal to the lower of 1.5% per month or fraction thereof or the highest legal rate on the unpaid balance.

Freight

Freight policy will be listed on the Product discount sheets, or at option of Seller one of the following freight terms will be quoted.

F.O.B.—P/S—Frt./Ppd. and Invoiced

Products are sold F.O.B. point of shipment freight prepaid and invoiced to the Buyer.

F.O.B.—P/S—Frt./Ppd. and Allowed

Products sold are delivered F.O.B. point of shipment, freight prepaid and included in the price.

F.O.B. Destination—Frt./Ppd. and Allowed

At Buyer's option, Seller will deliver the Products F.O.B. destination freight prepaid and 2% will be added to the net price.

The term "freight prepaid" means that freight charges will be prepaid to the accessible common carrier delivery point nearest the destination for shipments within the United States and Puerto Rico unless noted differently on the Product discount sheets. For any other destination contact Seller's representative.

Shipment and Routing

Seller shall select the point of origin of shipment, the method of transportation, the type of carrier equipment and the routing of the shipment.

If the Buyer specifies a special method of transportation, type of carrier equipment, routing, or delivery requirement, Buyer shall pay all special freight and handling charges.

When freight is included in the price, no allowance will be made in lieu of transportation if the Buyer accepts shipment at factory, warehouse, or freight station or otherwise supplies its own transportation.

Risk of Loss

Risk of loss or damage to the Products shall pass to Buyer at the F.O.B. point.

Concealed Damage

Except in the event of F.O.B. destination shipments, Seller will not participate in any settlement of claims for concealed damage.

When shipment has been made on an F.O.B. destination basis, the Buyer must unpack immediately and, if damage is discovered must:

1. Not move the Products from the point of examination.
2. Retain shipping container and packing material.
3. Notify the carrier in writing of any apparent damage.
4. Notify Seller representative within 72 hours of delivery.
5. Send Seller a copy of the carrier's inspection report.

Witness Tests/Customer Inspection

Standard factory tests may be witnessed by the Buyer at Seller's factory for an additional charge calculated at the rate of $2,500 per day (not to exceed eight (8) hours) per Product type. Buyer may final inspect Products at the Seller's factory for $500 per day per Product type.

Witness tests will add one (1) week to the scheduled shipping date. Seller will notify Buyer fourteen (14) calendar days prior to scheduled witness testing or inspection. In the event Buyer is unable to attend, the Parties shall mutually agree on a rescheduled date. However, Seller reserves the right to deem the witness tests waived with the right to ship and invoice Products.

Held Orders

For any order held, delayed or rescheduled at the request of the Buyer, Seller may, at its sole option (1) require payment to be based on any reasonable basis, including but not limited to the contract price, and any additional expenses, or cost resulting from such a delay; (2) store Products at the sole cost and risk of loss of the Buyer; and/or (3) charge to the Buyer those prices under the applicable price policy. Payment for such price, expenses and costs, in any such event, shall be due by Buyer within thirty (30) days from date of Seller's invoice. Any order so held delayed or rescheduled beyond six (6) months will be treated as a Buyer termination.

Drawing Approval

Seller will design the Products in line with, in Seller's judgment, good commercial practice. If at drawing approval Buyer makes changes outside of the design as covered in their specifications, Seller will then be paid reasonable charges and allowed a commensurate delay in shipping date based on the changes made.

Drawing Re-Submittal

When Seller agrees to do so in its quotation, Seller shall provide Buyer with the first set of factory customer approval drawing(s) at Seller's expense. The customer approval drawing(s) will be delivered at the quoted delivery date. If Buyer requests drawing changes or additions after the initial factory customer approval drawing(s) have been submitted by Seller, the Seller, at its option, may assess Buyer drawing charges. Factory customer approval drawing changes required due to misinterpretation by Seller will be at Seller's expense. Approval drawings generated by Bid Manager are excluded from this provision.

Warranty

Warranty for Products

Seller warrants that the Products manufactured by it will conform to Seller's applicable specifications and be free from failure due to defects in workmanship and material for one (1) year from the date of installation of the Product or eighteen (18) months from the date of shipment of the Product, whichever occurs first.

In the event any Product fails to comply with the foregoing warranty Seller will, at its option, either (a) repair or replace the defective Product, or defective part or component thereof, F.O.B. Seller's facility freight prepaid, or (b) credit Buyer for the purchase price of the Product. All warranty claims shall be made in writing.

Seller requires all non-conforming Products be returned at Seller's expense for evaluation unless specifically stated otherwise in writing by Seller.

This warranty does not cover failure or damage due to storage, installation, operation or maintenance not in conformance with Seller's recommendations and industry standard practice or due to accident, misuse, abuse or negligence. This warranty does not cover reimbursement for labor, gaining access, removal, installation, temporary power or any other expenses, which may be incurred in connection with repair or replacement.

This warranty does not apply to equipment not manufactured by Seller. Seller limits itself to extending the same warranty it receives from the supplier.

Effective Date: November 1, 2008

Extended Warranty for Products

If requested by the Buyer and specifically accepted in writing by Seller, the foregoing standard warranty for Products will be extended from the date of shipment for the period and price indicated below:

- 24 months—2% of Contract Price
- 30 months—3% of Contract Price
- 36 months—4% of Contract Price

Special Warranty (In and Out) for Products

If requested by the Buyer and specifically accepted in writing by Seller, Seller will, during the warranty period for Products, at an additional cost of 2% of the contract price, be responsible for the direct cost of:

1. Removing the Product from the installed location.
2. Transportation to the repair facility and return to the site.
3. Reinstallation on site.

The total liability of Seller for this Special Warranty for Products is limited to 50% of the contract price of the particular Product being repaired and excludes expenses for removing adjacent apparatus, walls, piping, structures, temporary service, etc.

Warranty for Services

Seller warrants that the Services performed by it hereunder will be performed in accordance with generally accepted professional standards.

The Services, which do not so conform, shall be corrected by Seller upon notification in writing by the Buyer within one (1) year after completion of the Services.

Unless otherwise agreed to in writing by Seller, Seller assumes no responsibility with respect to the suitability of the Buyer's, or its customer's, equipment or with respect to any latent defects in equipment not supplied by Seller. This warranty does not cover damage to Buyer's, or its customer's, equipment, components or parts resulting in whole or in part from improper maintenance or operation or from their deteriorated condition. Buyer will, at its cost, provide Seller with unobstructed access to the defective Services, as well as adequate free working space in the immediate vicinity of the defective Services and such facilities and systems, including, without limitation, docks, cranes and utility disconnects and connects, as may be necessary in order that Seller may perform its warranty obligations. The conducting of any tests shall be mutually agreed upon and Seller shall be notified of, and may be present at, all tests that may be made.

Warranty for Power Systems Studies

Seller warrants that any power systems studies performed by it will conform to generally accepted professional standards. Any portion of the study, which does not so conform, shall be corrected by Seller upon notification in writing by the Buyer within six (6) months after completion of the study. All warranty work shall be performed in a single shift straight time basis Monday through Friday. In the event that the study requires correction of warranty items on an overtime schedule, the premium portion of such overtime shall be for the Buyer's account.

Limitation on Warranties for Products, Services and Power Systems Studies

THE FOREGOING WARRANTIES ARE EXCLUSIVE EXCEPT FOR WARRANTY OF TITLE. SELLER DISCLAIMS ALL OTHER WARRANTIES INCLUDING ANY IMPLIED WARRANTIES OF MERCHANTABILITY AND FITNESS FOR A PARTICULAR PURPOSE.

CORRECTION OF NON-CONFORMITIES IN THE MANNER AND FOR THE PERIOD OF TIME PROVIDED ABOVE SHALL CONSTITUTE SELLER'S SOLE LIABILITY AND BUYER'S EXCLUSIVE REMEDY FOR FAILURE OF SELLER TO MEET ITS WARRANTY OBLIGATIONS, WHETHER CLAIMS OF THE BUYER ARE BASED IN CONTRACT, IN TORT (INCLUDING NEGLIGENCE OR STRICT LIABILITY), OR OTHERWISE.

Asbestos

Federal Law requires that building or facility owners identify the presence, location and quantity of asbestos containing material (hereinafter "ACM") at work sites. Seller is not licensed to abate ACM. Accordingly, for any contract which includes the provision of Services, prior to (i) commencement of work at any site under a specific Purchase Order, (ii) a change in the work scope of any Purchase Order, the Buyer will certify that the work area associated with the Seller's scope of work includes the handling of Class II ACM, including but not limited to generator wedges and high temperature gaskets which include asbestos materials. The Buyer shall, at its expense, conduct abatement should the removal, handling, modification or reinstallation, or some or all of them, of said Class II ACM be likely to generate airborne asbestos fibers; and should such abatement affect the cost of or time of performance of the work then Seller shall be entitled to an equitable adjustment in the schedule, price and other pertinent affected provisions of the contract.

Compliance with Nuclear Regulation

Seller's Products are sold as commercial grade Products not intended for application in facilities or activities licensed by the United States Nuclear Regulatory Commission for atomic purposes. Further certification will be required for use of the Products in any safety-related application in any nuclear facility licensed by the U.S. Nuclear Regulatory Commission.

Returning Products

Authorization and shipping instructions for the return of any Products must be obtained from Seller before returning the Products.

When return is occasioned due to Seller error, full credit including all transportation charges will be allowed.

Product Notices

Buyer shall provide the user (including its employees) of the Products with all Seller supplied Product notices, warnings, instructions, recommendations, and similar materials.

Force Majeure

Seller shall not be liable for failure to perform or delay in performance due to fire, flood, strike or other labor difficulty, act of God, act of any governmental authority or of the Buyer, riot, embargo, fuel or energy shortage, car shortage, wrecks or delays in transportation, or due to any other cause beyond Seller's reasonable control. In the event of delay in performance due to any such cause, the date of delivery or time for completion will be extended by a period of time reasonably necessary to overcome the effect of such delay.

Liquidated Damages

Contracts which include liquidated damage clauses for failure to meet shipping or job completion promises are not acceptable or binding on Seller, unless such clauses are specifically accepted in writing by an authorized representative of the Seller at its headquarters office.

Patent Infringement

Seller will defend or, at its option, settle any suit or proceeding brought against Buyer, or Buyer's customers, to the extent it is based upon a claim that any Product or part thereof, manufactured by Seller or its subsidiaries and furnished hereunder, infringes any United States patent, other than a claim of infringement based upon use of a Product or part thereof in a process, provided Seller is notified in reasonable time and given authority, information and assistance (at Seller's expense) for the defense of same. Seller shall pay all legal and court costs and expenses and court-assessed damages awarded therein against Buyer resulting from or incident to such suit or proceeding. In addition to the foregoing, if at any time Seller determines there is a substantial question of infringement of any United States patent, and the use of such Product is or may be enjoined, Seller may, at its option and expense: either (a) procure for Buyer the right to continue using and selling the Product; (b) replace the Product with non-infringing apparatus; (c) modify the Product so it becomes non-infringing; or (d) as a last resort, remove the Product and refund the purchase price, equitably adjusted for use and obsolescence. In no case does Seller agree to pay any recovery based upon its Buyer's savings or profit through use of Seller's Products whether the use be special or ordinary. The foregoing states the entire liability of Seller for patent infringement.

The preceding paragraph does not apply to any claim of infringement based upon: (a) any modification made to a Product other than by Seller; (b) any design and/or specifications of Buyer to which a Product was manufactured; or (c) the use or combination of Product with other products where the Product does not itself infringe. As to the above-identified claim situations where the preceding paragraph does not apply, Buyer shall defend and hold Seller harmless in the same manner and to the extent as Seller's obligations described in the preceding paragraph. Buyer shall be responsible for obtaining (at Buyer's expense) all license rights required for Seller to be able to use software products in the possession of Buyer where such use is required in order to perform any Service for Buyer.

With respect to a Product or part thereof not manufactured by Seller or its subsidiaries, Seller will attempt to obtain for Buyer, from the supplier(s), the patent indemnification protection normally provided by the supplier(s) to customers.

Limitation of Liability

THE REMEDIES OF THE BUYER SET FORTH IN THIS CONTRACT ARE EXCLUSIVE AND ARE ITS SOLE REMEDIES FOR ANY FAILURE OF SELLER TO COMPLY WITH ITS OBLIGATIONS HEREUNDER.

NOTWITHSTANDING ANY PROVISION IN THIS CONTRACT TO THE CONTRARY, IN NO EVENT SHALL SELLER BE LIABLE IN CONTRACT, IN TORT (INCLUDING NEGLIGENCE OR STRICT LIABILITY) OR OTHERWISE FOR DAMAGE TO PROPERTY OR EQUIPMENT OTHER THAN PRODUCTS SOLD HEREUNDER, LOSS OF PROFITS OR REVENUE, LOSS OF USE OF PRODUCTS, COST OF

CAPITAL, CLAIMS OF CUSTOMERS OF THE BUYER OR ANY SPECIAL, INDIRECT, INCIDENTAL OR CONSEQUENTIAL DAMAGES WHATSOEVER, REGARDLESS OF WHETHER SUCH POTENTIAL DAMAGES ARE FORESEEABLE OR IF SELLER HAS BEEN ADVISED OF THE POSSIBILITY OF SUCH DAMAGES.

THE TOTAL CUMULATIVE LIABILITY OF SELLER ARISING FROM OR RELATED TO THIS CONTRACT WHETHER THE CLAIMS ARE BASED IN CONTRACT, IN TORT (INCLUDING NEGLIGENCE OR STRICT LIABILITY) OR OTHERWISE, SHALL NOT EXCEED THE PRICE OF THE PRODUCT OR SERVICES ON WHICH SUCH LIABILITY IS BASED.

A

ACD V1-**T6**-4, V1-**T6**-6
ACD2 . . . . . V1-**T6**-4, V1-**T6**-6
ARP V1-**T4**-77, V1-**T5**-8
ARP0 . . . . . V1-**T4**-30, V1-**T4**-33, V1-**T4**-85

B

BD V1-**T1**-81
BH V1-**T1**-85
BHG V1-**T1**-85
BHL V1-**T1**-85
BHT V1-**T1**-85
BIN V1-**T1**-25
BINA V1-**T1**-22, V1-**T1**-25, V1-**T1**-61, V1-**T1**-92
BJ V1-**T1**-84, V1-**T1**-85
BJH V1-**T1**-84, V1-**T1**-85
BJL V1-**T1**-86
BQ V1-**T1**-81
BQC V1-**T1**-83
BR V1-**T2**-10
BRB V1-**T1**-26
BRC V1-**T1**-26, V1-**T1**-57
BRD V1-**T1**-26, V1-**T1**-82, V1-**T1**-85
BRE V1-**T1**-85
BRF V1-**T1**-61
BRG V1-**T1**-26, V1-**T1**-59, V1-**T1**-66, V1-**T1**-93
BRH V1-**T1**-52, V1-**T1**-77, V1-**T1**-78, V1-**T1**-85, V1-**T4**-98, V1-**T4**-127
BRHH V1-**T1**-77, V1-**T4**-98, V1-**T4**-127
BRL V1-**T1**-26, V1-**T1**-52, V1-**T1**-57, V1-**T1**-61, V1-**T1**-78, V1-**T1**-85
BRL2 . . . . . V1-**T1**-79
BRM V1-**T1**-61, V1-**T1**-86
BRP V1-**T1**-86
BRQ V1-**T1**-85
BRR V1-**T1**-61
BRS V1-**T1**-15, V1-**T1**-52, V1-**T1**-61, V1-**T1**-84, V1-**T4**-139
BRSF V1-**T4**-139
BRSUR V1-**T1**-15, V1-**T2**-9
BRW V1-**T1**-84
BRX V1-**T1**-77
BR1 . . . . . V1-**T1**-46–V1-**T1**-49, V1-**T1**-51, V1-**T1**-53, V1-**T1**-59, V1-**T1**-60, V1-**T1**-77, V1-**T1**-78, V1-**T1**-82
BR2 . . . . . V1-**T1**-46–V1-**T1**-49, V1-**T1**-51–V1-**T1**-52, V1-**T1**-57, V1-**T1**-59, V1-**T1**-60, V1-**T1**-77, V1-**T1**-82, V1-**T1**-84, V1-**T4**-98, V1-**T4**-127, V1-**T5**-22
BR23 . . . . . V1-**T2**-7
BR25 . . . . . V1-**T2**-7
BR3 . . . . . V1-**T1**-46, V1-**T1**-49, V1-**T1**-51–V1-**T1**-52, V1-**T1**-57, V1-**T1**-59, V1-**T1**-78, V1-**T1**-82
BR4 . . . . . V1-**T1**-46–V1-**T1**-49, V1-**T1**-51–V1-**T1**-53, V1-**T1**-57, V1-**T1**-82
BR42 . . . . . V1-**T1**-47
BR5 . . . . . V1-**T1**-58
BR6 . . . . . V1-**T1**-48
BR8 . . . . . V1-**T1**-46, V1-**T1**-48, V1-**T1**-49, V1-**T1**-51, V1-**T1**-52
BSC V1-**T1**-22
BSS V1-**T1**-22, V1-**T1**-61
BW V1-**T1**-61, V1-**T4**-43
BWFP V1-**T1**-61
B424 . . . . . V1-**T1**-47
B60N V1-**T6**-4, V1-**T6**-6

C

CC V1-**T1**-38, V1-**T1**-56, V1-**T1**-85, V1-**T1**-95
CCH V1-**T1**-95
CCL V1-**T1**-38, V1-**T1**-85
CCV V1-**T1**-95, V1-**T4**-95
CCVH V1-**T1**-95, V1-**T4**-95, V1-**T4**-98, V1-**T4**-137
CCV2 . . . . . V1-**T4**-95, V1-**T4**-98, V1-**T4**-127, V1-**T4**-137
CC3 . . . . . V1-**T1**-95, V1-**T4**-137
CG V1-**T4**-76
CH V1-**T1**-90
CHB V1-**T1**-22, V1-**T1**-61, V1-**T5**-8
CHE V1-**T1**-16, V1-**T1**-23
CHEC V1-**T2**-9
CHEG V1-**T3**-14, V1-**T3**-18
CHF V1-**T1**-22, V1-**T1**-32, V1-**T1**-33
CHFL V1-**T5**-7
CHG V1-**T1**-25
CHH V1-**T1**-38
CHI V1-**T5**-8
CHL V1-**T1**-11, V1-**T1**-16, V1-**T1**-38, V1-**T1**-99, V1-**T5**-8
CHLD V1-**T5**-8
CHLDF V1-**T5**-8, V1-**T5**-9
CHM V1-**T1**-22, V1-**T1**-38, V1-**T4**-41, V1-**T5**-12, V1-**T5**-17
CHMM V1-**T4**-41
CHM1 . . . . . V1-**T5**-12, V1-**T5**-17
CHM4 . . . . . V1-**T5**-17
CHM5 . . . . . V1-**T5**-12
CHM7 . . . . . V1-**T5**-12
CHN V1-**T1**-22, V1-**T1**-25, V1-**T5**-9
CHOU V1-**T5**-9
CHP V1-**T1**-24, V1-**T1**-36–V1-**T1**-38, V1-**T5**-23
CHPA V1-**T5**-7, V1-**T5**-23
CHPE V1-**T5**-7, V1-**T5**-23
CHPO V1-**T5**-8, V1-**T5**-9
CHQ V1-**T1**-97, V1-**T2**-10
CHR V1-**T1**-22, V1-**T5**-12, V1-**T5**-17
CHR1 . . . . . V1-**T5**-12, V1-**T5**-17
CHR3 . . . . . V1-**T5**-12
CHR7 . . . . . V1-**T5**-12
CHS V1-**T1**-15, V1-**T1**-16, V1-**T1**-22
CHSA V1-**T2**-10
CHSPC V1-**T2**-6
CHSPF V1-**T2**-6
CHSPT V1-**T2**-4–V1-**T2**-6
CHSP3 . . . . . V1-**T2**-6
CHSUR V1-**T2**-9
CHT V1-**T1**-35
CHTE V1-**T5**-7

CHU V1-**T4**-84, V1-**T4**-85, V1-**T5**-11, V1-**T5**-17
CHUD V1-**T5**-9
CHU1 . . . . . V1-**T5**-11, V1-**T5**-17
CHU2 . . . . . V1-**T4**-84, V1-**T5**-11
CHU3 . . . . . V1-**T5**-11
CHU4 . . . . . V1-**T5**-11, V1-**T5**-17
CHU5 . . . . . V1-**T5**-11
CHU6 . . . . . V1-**T5**-11
CHU7 . . . . . V1-**T5**-11
CHVH V1-**T4**-127
CH1 . . . . . V1-**T1**-7, V1-**T1**-10, V1-**T1**-13, V1-**T1**-23, V1-**T1**-32–V1-**T1**-35, V1-**T1**-37, V1-**T1**-38, V1-**T3**-17, V1-**T3**-18, V1-**T4**-84
CH2 . . . . . V1-**T1**-7–V1-**T1**-10, V1-**T1**-11, V1-**T1**-13, V1-**T1**-17, V1-**T1**-18, V1-**T1**-23, V1-**T1**-32–V1-**T1**-35, V1-**T1**-37, V1-**T4**-77, V1-**T4**-84, V1-**T4**-85
CH2L V1-**T1**-9
CH23 . . . . . V1-**T2**-7
CH25 . . . . . V1-**T2**-7
CH3 . . . . . V1-**T1**-7, V1-**T1**-8, V1-**T1**-10–V1-**T1**-14, V1-**T1**-17, V1-**T1**-18, V1-**T1**-23, V1-**T1**-32–V1-**T1**-35, V1-**T3**-14
CH4 . . . . . V1-**T1**-7–V1-**T1**-14, V1-**T1**-17, V1-**T1**-18, V1-**T1**-23, V1-**T3**-17, V1-**T3**-18
CH4L V1-**T1**-9
CH5 . . . . . V1-**T1**-14, V1-**T4**-85
CH6 . . . . . V1-**T1**-13, V1-**T1**-14, V1-**T1**-17, V1-**T1**-23, V1-**T3**-17, V1-**T3**-18
CH7 . . . . . V1-**T1**-7, V1-**T1**-10–V1-**T1**-13, V1-**T1**-24
CH8 . . . . . V1-**T1**-7–V1-**T1**-11, V1-**T1**-17, V1-**T1**-18, V1-**T1**-23, V1-**T1**-26, V1-**T3**-17, V1-**T3**-18
CH8L V1-**T1**-9
CH9 . . . . . V1-**T1**-25, V1-**T1**-38, V1-**T1**-61
CLRP V1-**T1**-98
CL1 . . . . . V1-**T1**-98
CL2 . . . . . V1-**T1**-98
CMB V1-**T4**-41, V1-**T4**-42, V1-**T4**-66
CMBB V1-**T4**-41
CMBE V1-**T4**-50, V1-**T4**-51, V1-**T4**-66, V1-**T4**-86
CMBX V1-**T4**-42
CSH V1-**T1**-11, V1-**T1**-16
CSH2 . . . . . V1-**T1**-11, V1-**T4**-43
CSR V1-**T1**-11, V1-**T1**-16, V1-**T1**-22, V1-**T1**-52, V1-**T4**-43, V1-**T5**-22
CSR2 . . . . . V1-**T1**-11, V1-**T4**-43
CTA V1-**T4**-117
CVH V1-**T4**-137
CVH2 . . . . . V1-**T4**-97, V1-**T4**-98, V1-**T4**-127
CVS V1-**T4**-137
CVS2 . . . . . V1-**T4**-97, V1-**T4**-98, V1-**T4**-127
CV2 . . . . . V1-**T4**-97, V1-**T4**-98, V1-**T4**-127, V1-**T4**-137
CV3 . . . . . V1-**T4**-137

D

DPB V1-**T6**-4, V1-**T6**-6
DPB2 . . . . . V1-**T6**-4, V1-**T6**-6
DPF V1-**T6**-4–V1-**T6**-6
DPF2 . . . . . V1-**T6**-4–V1-**T6**-6
DPU V1-**T6**-4–V1-**T6**-6
DPU2 . . . . . V1-**T6**-4–V1-**T6**-5
DS V1-**T1**-25, V1-**T1**-66, V1-**T5**-7
DS1 . . . . . V1-**T4**-67
DS2 . . . . . V1-**T4**-67
DS3 . . . . . V1-**T4**-67
DS9 . . . . . V1-**T4**-67

E

ECC V1-**T1**-95
ECCV V1-**T1**-95
EDL V1-**T4**-34
EGEN V1-**T3**-3, V1-**T3**-4
EGS V1-**T3**-18
EHD V1-**T4**-137
EPBD V1-**T4**-34
EPBQ V1-**T4**-34
EPBS V1-**T4**-34
EPBT V1-**T4**-34
ESL V1-**T4**-34

G

GB V1-**T1**-25, V1-**T1**-66, V1-**T1**-93
GBK V1-**T5**-9
GFC V1-**T1**-79, V1-**T1**-80
GFE V1-**T1**-80
GHC V1-**T5**-75
GTAP V1-**T1**-59

H

HL V1-**T1**-85
HPB V1-**T4**-77
HPC V1-**T4**-76
HPP V1-**T4**-77
HP2 . . . . . V1-**T4**-77
HP4 . . . . . V1-**T4**-76, V1-**T4**-77
HP8 . . . . . V1-**T4**-76

I

IG12 . . . . . V1-**T2**-8
IG52 . . . . . V1-**T2**-8
IG53 . . . . . V1-**T2**-8
IMM V1-**T4**-67

J

JT V1-**T5**-75

L

LC V1-**T1**-22, V1-**T1**-61

M

MBB V1-**T4**-41
MBE V1-**T4**-50, V1-**T4**-66
MBED V1-**T4**-60
MBER V1-**T4**-51
MBE1 . . . . . V1-**T4**-50, V1-**T4**-51
MBE2 . . . . . V1-**T4**-50, V1-**T4**-51
MBE3 . . . . . V1-**T4**-51
MBE4 . . . . . V1-**T4**-51

MBE8 . . . . . V1-**T4**-51
MBH V1-**T4**-67
MBP V1-**T4**-41
MBT V1-**T4**-42
MBX V1-**T4**-41
MB1 . . . . . V1-**T4**-42
MB2 . . . . . V1-**T4**-66
MB20 . . . . . V1-**T4**-42
MB4 . . . . . V1-**T4**-42
MB5 . . . . . V1-**T4**-67
MB8 . . . . . V1-**T4**-42, V1-**T4**-66
MCB V1-**T1**-38, V1-**T1**-85, V1-**T4**-43
MCBK V1-**T4**-43
MHD V1-**T5**-23
MHM. V1-**T5**-22
MHP V1-**T5**-23
MHR V1-**T5**-22
MM V1-**T4**-139
MPL. V1-**T5**-75–V1-**T5**-77
MPLFH V1-**T5**-77
MSEG V1-**T2**-6, V1-**T4**-35
MSL. V1-**T4**-142
MST. V1-**T4**-142

N

NL V1-**T1**-22, V1-**T1**-61

Q

QCF. V1-**T5**-75
QCGF V1-**T5**-75

R

RH V1-**T1**-66
RN V1-**T1**-18
RV V1-**T5**-75, V1-**T5**-77

S

SPC V1-**T1**-22, V1-**T1**-61
SP1 . . . . . V1-**T2**-4
SR V1-**T1**-39, V1-**T1**-86
SRL V1-**T1**-22, V1-**T1**-61
ST V1-**T1**-39
STL V1-**T4**-26

T

TCD V1-**T1**-22, V1-**T1**-61
TDL V1-**T1**-22, V1-**T1**-61
TH V1-**T1**-85
TT120 . . . . . V1-**T1**-21

U

UAHT. V1-**T4**-5
UAST. V1-**T4**-26
UAT V1-**T4**-20
UATE. V1-**T4**-15
UATH. V1-**T4**-12, V1-**T4**-13
UATR. V1-**T4**-4–V1-**T4**-6
UATZ. V1-**T4**-6, V1-**T4**-21
UBEH. V1-**T4**-14
UBGT. V1-**T4**-15
UBH V1-**T4**-20, V1-**T4**-21
UBHR. V1-**T4**-5, V1-**T4**-6, V1-**T4**-14
UBHT. V1-**T4**-5
UBTE V1-**T4**-14
UBTH. V1-**T4**-12, V1-**T4**-13
UBTR V1-**T4**-6
UEHT V1-**T4**-20
UETH V1-**T4**-14
UE7 . . . . . V1-**T4**-14
UFHT V1-**T4**-4–V1-**T4**-5
UFT V1-**T4**-12, V1-**T4**-15
UFTE V1-**T4**-14
UFTH V1-**T4**-12
UFTR V1-**T4**-5
UGE V1-**T4**-15
UGHR. V1-**T4**-5
UGHT. V1-**T4**-4–V1-**T4**-6, V1-**T4**-31
UGRS. V1-**T4**-6
UGTE V1-**T4**-14, V1-**T4**-15
UGTH. V1-**T4**-12
UGTR V1-**T4**-4, V1-**T4**-5, V1-**T4**-31
UHI. V1-**T4**-20
UHIR V1-**T4**-5
UHT V1-**T4**-20, V1-**T4**-21
UHTR V1-**T4**-4–V1-**T4**-6, V1-**T4**-28, V1-**T4**-31
UHTT V1-**T4**-4, V1-**T4**-6, V1-**T4**-20
UH4 . . . . . V1-**T4**-12
UH5 . . . . . V1-**T4**-12
UH7 . . . . . V1-**T4**-12
UIH. V1-**T4**-14
ULTS V1-**T4**-26
UNRR. V1-**T4**-7
URRS V1-**T4**-7
URS V1-**T4**-4, V1-**T4**-6, V1-**T4**-7
URT V1-**T4**-22
URTR V1-**T4**-7
USTH V1-**T4**-26
USTL V1-**T4**-26
USTS V1-**T4**-26
UST6 . . . . . V1-**T4**-26
UTE V1-**T4**-14, V1-**T4**-32
UTH V1-**T4**-12, V1-**T4**-13, V1-**T4**-32
UTRS V1-**T4**-4–V1-**T4**-7, V1-**T4**-31
UTTE V1-**T4**-14, V1-**T4**-15
UTTH V1-**T4**-12
UTZR V1-**T4**-6
UT2 . . . . . V1-**T4**-20, V1-**T4**-21
UT3 . . . . . V1-**T4**-21
UT4 . . . . . V1-**T4**-20, V1-**T4**-21
UT5 . . . . . V1-**T4**-21
UT6 . . . . . V1-**T4**-21
U2R V1-**T4**-22
U2V V1-**T4**-22
U3R V1-**T4**-20, V1-**T4**-22
U3V V1-**T4**-22
U4R V1-**T4**-20–V1-**T4**-22

U5R V1-**T4**-20–V1-**T4**-22
U6R V1-**T4**-20
U921 . . . . . V1-**T4**-5

W

WCG V1-**T4**-138

Numerics

1BPS V1-**T4**-108
1MCB V1-**T4**-104, V1-**T4**-105
1MFS. V1-**T4**-106, V1-**T4**-107
1MHC V1-**T4**-104, V1-**T4**-105
1MM V1-**T4**-115, V1-**T4**-121, V1-**T4**-138, V1-**T4**-139, V1-**T4**-141
1MMA. V1-**T4**-138
1MMB. V1-**T4**-138–V1-**T4**-142
1MMC. V1-**T4**-140
1MMG. V1-**T4**-94
1MMJ V1-**T4**-139
1MMM V1-**T4**-140
1MMP. V1-**T4**-138
1MMR. V1-**T4**-140
1MMS. V1-**T4**-139
1MMW V1-**T4**-138, V1-**T4**-141
1MM3 . . . . . V1-**T4**-120, V1-**T4**-121
1MM4 . . . . . V1-**T4**-120, V1-**T4**-121
1MM5 . . . . . V1-**T4**-120, V1-**T4**-121, V1-**T4**-138
1MM6 . . . . . V1-**T4**-120, V1-**T4**-121
1MPL. V1-**T4**-94
1MPS V1-**T4**-92–V1-**T4**-94
1MP2. . . . . V1-**T4**-92, V1-**T4**-93
1MP3. . . . . V1-**T4**-92, V1-**T4**-93
1MP4. . . . . V1-**T4**-92, V1-**T4**-93
1MP5. . . . . V1-**T4**-92, V1-**T4**-93
1MP6. . . . . V1-**T4**-92, V1-**T4**-93
1MTB V1-**T4**-103
1UGP. V1-**T4**-107
1003 . . . . . V1-**T4**-5, V1-**T4**-6
1004 . . . . . V1-**T4**-5, V1-**T4**-6, V1-**T4**-13, V1-**T4**-20, V1-**T4**-21, V1-**T4**-26
1005 . . . . . V1-**T4**-6
1006 . . . . . V1-**T4**-6, V1-**T4**-13, V1-**T4**-20, V1-**T4**-28
1007 . . . . . V1-**T4**-5, V1-**T4**-13, V1-**T4**-15, V1-**T4**-20, V1-**T4**-26
1008 . . . . . V1-**T4**-5, V1-**T4**-6, V1-**T4**-13, V1-**T4**-15, V1-**T4**-20, V1-**T4**-21, V1-**T4**-26, V1-**T4**-28
1009 . . . . . V1-**T4**-5–V1-**T4**-7, V1-**T4**-13–V1-**T4**-15, V1-**T4**-20, V1-**T4**-21, V1-**T4**-28
1010 . . . . . V1-**T4**-12
1208 . . . . . V1-**T2**-8
1210 . . . . . V1-**T2**-8
1212. . . . . V1-**T1**-91
1224. . . . . V1-**T1**-50, V1-**T1**-91
1624. . . . . V1-**T1**-91
17NE V1-**T1**-92
1836. . . . . V1-**T1**-91
20NE V1-**T1**-92
2024. . . . . V1-**T1**-91
24IN V1-**T1**-91
24NE V1-**T1**-92
2424. . . . . V1-**T1**-91
2442. . . . . V1-**T1**-91
2460. . . . . V1-**T1**-21
3BPS V1-**T4**-108
3BR V1-**T1**-54–V1-**T1**-56, V1-**T1**-61
3B42 . . . . . V1-**T1**-54
3HM. V1-**T4**-109
3MC. V1-**T4**-109
3MCB. V1-**T4**-104, V1-**T4**-105, V1-**T4**-109
3MF V1-**T4**-109
3MFS. V1-**T4**-106, V1-**T4**-107, V1-**T4**-109
3MHC V1-**T4**-104, V1-**T4**-105
3MM V1-**T4**-115, V1-**T4**-138, V1-**T4**-139
3MMB V1-**T4**-138
3MME V1-**T4**-139, V1-**T4**-141
3MM2 . . . . . V1-**T4**-120–V1-**T4**-123
3MM3 . . . . . V1-**T4**-120–V1-**T4**-123
3MM4 . . . . . V1-**T4**-120–V1-**T4**-123, V1-**T4**-128
3MM5 . . . . . V1-**T4**-120–V1-**T4**-123, V1-**T4**-128
3MM6 . . . . . V1-**T4**-120–V1-**T4**-123
3MTB. V1-**T4**-103
3UGP. V1-**T4**-107
304. . . . . V1-**T1**-91
3424. . . . . V1-**T1**-55
35MM V1-**T4**-131
35NE V1-**T1**-92
35SS V1-**T4**-133
37M V1-**T4**-141
37MM V1-**T4**-132, V1-**T4**-141, V1-**T4**-142
37SS V1-**T4**-133
4242. . . . . V1-**T1**-50, V1-**T1**-91
47. . . . . V1-**T4**-140, V1-**T4**-142
48IN V1-**T1**-91
49. . . . . V1-**T4**-140, V1-**T4**-142
5250. . . . . V1-**T2**-8
5262. . . . . V1-**T2**-8
5362. . . . . V1-**T2**-8
612I V1-**T1**-91
7821. . . . . V1-**T4**-13
7866. . . . . V1-**T4**-5
816I V1-**T1**-91

A

Access Panel
- Marina Power and Lighting Equipment/RV Park Hook-Ups
  - Accessories V1-**T5**-77

Accessories
- Classified Circuit Breakers
  - Loadcenters and Circuit Breakers V1-**T1**-99
- Manual Transfer Switches
  - Flush Flange Kit V1-**T3**-18
  - Power Inlet Box V1-**T3**-18
- Marina Power and Lighting Equipment/RV Park Hook-Ups
  - Access Panel V1-**T5**-77
  - Breaker Plate V1-**T5**-75
  - Bus Bar Assembly V1-**T5**-76, V1-**T5**-77
  - Circuit Breakers V1-**T5**-75
  - Cover Set V1-**T5**-75
  - Digital Electronic Meters V1-**T5**-76
  - Door Hasp V1-**T5**-77
  - External Cover V1-**T5**-76
  - Faceplate V1-**T5**-75–V1-**T5**-77
  - Fire Extinguisher. V1-**T5**-77
  - Fluorescent Light Assembly. V1-**T5**-75
  - Fuse Holder V1-**T5**-76
  - Hose and Cable Brackets V1-**T5**-75
  - Isolation Plate. V1-**T5**-75
  - Lens V1-**T5**-77
  - Life Ring V1-**T5**-77
  - Light and Lens Assembly. V1-**T5**-75
  - Light Fuse. V1-**T5**-76, V1-**T5**-77
  - Light Holder V1-**T5**-77
  - Main Door. V1-**T5**-75, V1-**T5**-77
  - Main Housing V1-**T5**-75–V1-**T5**-77
  - Mounting Brackets. V1-**T5**-77
  - Mounting Feet V1-**T5**-76
  - Phone, Cable, Internet Assemblies V1-**T5**-76
  - Receptacles V1-**T5**-75
  - Spring Closure V1-**T5**-75
  - Strobe Light V1-**T5**-77
  - Water Assemblies V1-**T5**-76
- Metering Products
  - Group Metering Inline Current Transformer Cabinets Accessories, Group Metering V1-**T4**-117
  - House Panel Accessories. V1-**T4**-77
  - Meter Socket Accessories V1-**T4**-30
  - Metering Stack Accessories, Group Metering . V1-**T4**-138, V1-**T4**-139, V1-**T4**-141
  - West Coast All-In-One Design Accessories, Meter Breakers . V1-**T4**-60
- Mobile Home Panels. V1-**T5**-23
  - Direct Feed Kit V1-**T5**-23
  - Padmount Adapter V1-**T5**-23
  - Pedestal Extension. V1-**T5**-23
- Surge Protection Devices and Lightning Arresters
  - 3-Pack. V1-**T2**-6
  - Flushmount Kit V1-**T2**-6
  - Outdoor Communication Grounding Device V1-**T2**-6
  - Quick Connect Design V1-**T2**-6
  - Raintight Enclosure V1-**T2**-6
- Temporary Power/RV Park
  - Cable TV and Telephone Bracket V1-**T5**-7
  - Fluorescent Light Kit. V1-**T5**-7
  - Pad-Mount Bracket V1-**T5**-7
  - Pedestal Extension V1-**T5**-7
  - Rainproof Conduit Hub V1-**T5**-7
  - Renewal Parts. V1-**T5**-8
- Type BR Loadcenters and Circuit Breakers V1-**T1**-61
  - Alarm Contacts V1-**T1**-86
  - Auxiliary Contact V1-**T1**-86
  - Field Installation and Parts V1-**T1**-61
  - Filler Plates V1-**T1**-61
  - Ground Bar Kits. V1-**T1**-66, V1-**T1**-93
  - Handle Lockoffs V1-**T1**-85
  - Handle Ties V1-**T1**-85
  - Hold-Down Kits. V1-**T1**-85
  - Main and Sub-Feed Lug Blocks V1-**T1**-61
  - Main Breaker Lug Kits. V1-**T1**-85
  - Main Lugs V1-**T1**-61
  - Mechanical Interlock Covers. V1-**T1**-64
  - Mechanical Interlocks V1-**T1**-86
  - Padlock Brackets. V1-**T1**-86
  - Rainproof Conduit Hubs V1-**T1**-66
  - Shunt Trip V1-**T1**-86
- Type CH Loadcenters and Circuit Breakers V1-**T1**-22
  - Decorator Cover V1-**T1**-26
  - Field Installation and Parts V1-**T1**-22
  - Goof Collars V1-**T1**-26
  - Ground Bar Kits. V1-**T1**-25
  - Handle Lockdogs V1-**T1**-38
  - Handle Lockoffs V1-**T1**-38
  - Handle Ties V1-**T1**-38
  - Hold-Down Kits. V1-**T1**-38
  - Main Breaker Lug Kits. V1-**T1**-38
  - Mechanical Interlock Covers. V1-**T1**-23
  - Mechanical Interlocks V1-**T1**-23, V1-**T1**-38
  - Mounting Bases V1-**T1**-38
  - Neutral Bar Accessories V1-**T1**-25
  - Phase Adapters. V1-**T1**-25
  - Rainproof Conduit Hubs V1-**T1**-25
  - Shunt Trip V1-**T1**-39

Admiral—SS
- Marina Power and Lighting Equipment
  - Power Pedestals. V1-**T5**-62

Air Conditioning Disconnects. V1-**T6**-1–V1-**T6**-10
- Cross-Reference V1-**T6**-6
- Ground Fault Receptacle V1-**T6**-5
- Molded Case Switch V1-**T6**-2, V1-**T6**-4
- Pullouts
  - Fused V1-**T6**-2, V1-**T6**-4
  - Non-Fused. V1-**T6**-2, V1-**T6**-4

Air Cooled Generators
- Standby Generator. V1-**T3**-3

Air Cooled Standby
- Standby Generator System V1-**T3**-2

Alarm Contacts
- Type BR Loadcenters and Circuit Breakers
  - Accessories. V1-**T1**-86

Aluminum Meter Breakers
- Metering Products
  - Meter Breakers. V1-**T4**-87

ATS Kit
Automatic Transfer Switches V1-**T3**-14

ATS Ready LC with factory-installed ATS kit
Automatic Transfer Switches V1-**T3**-14

ATS Ready Loadcenter
Automatic Transfer Switches V1-**T3**-14

Automatic Transfer Switches V1-**T3**-11–V1-**T3**-15
ATS Ready LC with factory-installed ATS kit. V1-**T3**-14
ATS Ready Loadcenter V1-**T3**-14
ATS Kit V1-**T3**-14
Eaton's Green Line V1-**T3**-11
Fully Automatic Transfer Switches V1-**T3**-11

Auxiliary Contact
Type BR Loadcenters and Circuit Breakers
Accessories V1-**T1**-86

B

BR Circuit Breakers
BR Specialty Products
Type BR
Loadcenters and Circuit Breakers V1-**T1**-76

BR Quick Connect Neutral Loadcenters
BR Specialty Products
Type BR
Loadcenters and Circuit Breakers V1-**T1**-57

Breaker Plate
Marina Power and Lighting Equipment/RV Park Hook-Ups
Accessories V1-**T5**-75

Bus Bar Assembly
Marina Power and Lighting Equipment/RV Park Hook-Ups
Accessories V1-**T5**-76, V1-**T5**-77

C

Cable TV and Telephone Bracket
Temporary Power/RV Park
Accessories V1-**T5**-7

CH Circuit Breakers
Type CH
Loadcenters and Circuit Breakers V1-**T1**-31

CH Specialty Products
Non-Metallic Loadcenter. V1-**T1**-21

CH Style Renovation Solutions
Metering Products
Meter Breakers V1-**T4**-86

Circuit Breakers
Marina Power and Lighting Equipment/RV Park Hook-Ups
Accessories V1-**T5**-75

Classified Circuit Breakers
Loadcenters and Circuit Breakers V1-**T1**-96–V1-**T1**-100
Accessories V1-**T1**-99
Type CH Replacement Breakers V1-**T1**-97

Commercial Lever Bypass Sockets
Metering Products V1-**T4**-10–V1-**T4**-17

Commercial Meter Stack Modules
Group Metering
Metering Products V1-**T4**-129

Commercial Safety Sockets
Meter Breakers
Metering Products V1-**T4**-83

Common Trip Quadplex Breakers
Type BR
Loadcenters and Circuit Breakers. V1-**T1**-83

Communications Grounding Device
Metering Products. V1-**T4**-35, V1-**T4**-36

Convertible Loadcenters MCB
Type BR
Loadcenters and Circuit Breakers. V1-**T1**-51
Type CH
Loadcenters and Circuit Breakers. V1-**T1**-11

Convertible Loadcenters MLO
Type BR
Loadcenters and Circuit Breakers. V1-**T1**-51
Type CH
Loadcenters and Circuit Breakers. V1-**T1**-11

Cover Set
Marina Power and Lighting Equipment/RV Park Hook-Ups
Accessories. V1-**T5**-75

Cross-Reference
Metering Products. V1-**T4**-31

D

Decorator Cover
Type CH Loadcenters and Circuit Breakers
Accessories. V1-**T1**-26

Digital Electronic Kilowatthour Meters
Marina Power and Lighting Equipment
Power Pedestals. V1-**T5**-81
RV Park Hook-Ups
Power Pedestals. V1-**T5**-44

Digital Electronic Meters
Marina Power and Lighting Equipment/RV Park Hook-Ups
Accessories. V1-**T5**-76

Direct Feed Kit
Mobile Home Panels
Accessories. V1-**T5**-23

Distribution Equipment—Ground Fault Monitor
Marina Power and Lighting Equipment
Power Pedestals. V1-**T5**-82

Distribution Equipment—MegaYacht Powerpoint
Marina Power and Lighting Equipment
Power Pedestals. V1-**T5**-83

Distribution Equipment—Panels
Marina Power and Lighting Equipment
Power Pedestals. V1-**T5**-89
Power Pedestals
RV Park Hook-Ups. V1-**T5**-49

Distribution Equipment—Substations
Marina Power and Lighting Equipment
Power Pedestals. V1-**T5**-86

Distribution Equipment—Transformers
Marina Power and Lighting Equipment
Power Pedestals. V1-**T5**-90

Distribution—Ground Fault Monitor
RV Park Hook-Ups
Power Pedestals V1-**T5**-45

Distribution—Substations
RV Park Hook-Ups
Power Pedestals V1-**T5**-46

Distribution—Transformers
RV Park Hook-Ups
Power Pedestals V1-**T5**-50

Door Hasp
Marina Power and Lighting Equipment/RV Park Hook-Ups
Accessories V1-**T5**-77

E

Eaton Terms & Conditions V1-**T1**-1
Freight V1-**T1**-3
Limitation of Liability V1-**T1**-5
Terms and Conditions of Sale V1-**T1**-1
Terms of Payment V1-**T1**-2
Warranty V1-**T1**-3

Eaton's Green Line
Automatic Transfer Switches V1-**T3**-11

Emergency Generator Panels
Manual Transfer Switches V1-**T3**-16–V1-**T3**-18

Emergency Power Panels
Manual Transfer Switches V1-**T3**-16

Enclosed Breakers
Loadcenters and Circuit Breakers V1-**T1**-94–V1-**T1**-95

EUSERC Requirements Service Entrance Devices
Meter Breakers
Metering Products V1-**T4**-48

External Cover
Marina Power and Lighting Equipment/RV Park Hook-Ups
Accessories V1-**T5**-76

F

Faceplate
Marina Power and Lighting Equipment/RV Park Hook-Ups
Accessories V1-**T5**-75–V1-**T5**-77

Factory-Installed Surge Protection
Surge Protection Devices and Lightning Arresters . V1-**T2**-2, V1-**T2**-9

Field Installation and Parts
Type BR Loadcenters and Circuit Breakers
Accessories V1-**T1**-61
Type CH Loadcenters and Circuit Breakers
Accessories V1-**T1**-22

Filler Plates
Type BR Loadcenters and Circuit Breakers
Accessories V1-**T1**-61

Fire Extinguisher
Marina Power and Lighting Equipment/RV Park Hook-Ups
Accessories V1-**T5**-77

Firehouse
Marina Power and Lighting Equipment
Power Pedestals V1-**T5**-73
RV Park Hook-Ups
Power Pedestals V1-**T5**-42

Fluorescent Light Assembly
Marina Power and Lighting Equipment/RV Park Hook-Ups
Accessories V1-**T5**-75

Fluorescent Light Kit
Temporary Power/RV Park
Accessories V1-**T5**-7

Flush Flange Kit
Manual Transfer Switches V1-**T3**-18

Flushmount Kit
Surge Protection Devices and Lightning Arresters V1-**T2**-6

Fully Automatic Transfer Switches
Automatic Transfer Switches V1-**T3**-11

Fuse Holder
Marina Power and Lighting Equipment/RV Park Hook-Ups
Accessories V1-**T5**-76

Fused, Unfused and Molded Case Switch
Air Conditioning Disconnects V1-**T6**-2–V1-**T6**-10

G

Goof Collars
Type CH Loadcenters and Circuit Breakers
Accessories V1-**T1**-26

Ground Bar Kits
Type BR Loadcenters and Circuit Breakers
Accessories V1-**T1**-66, V1-**T1**-93
Type CH Loadcenters and Circuit Breakers
Accessories V1-**T1**-25

Ground Fault Receptacle
Air Conditioning Disconnects V1-**T6**-5

Group Metering
Metering Products V1-**T4**-88–V1-**T4**-149
Accessories V1-**T4**-138, V1-**T4**-141
Commercial Meter Stack Modules V1-**T4**-129
Main Service Modules V1-**T4**-101
Main Tenant Circuit Breaker . V1-**T4**-96, V1-**T4**-98, V1-**T4**-127, V1-**T4**-136
Meter Packs V1-**T4**-90
Phase Balanced Stack V1-**T4**-128
Renewal Parts V1-**T4**-140, V1-**T4**-142
Residential and Commercial Applications V1-**T4**-88
Residential Meter Stacks V1-**T4**-118
Surge Metering V1-**T4**-115
Type CCV Tenant Main Circuit Breaker V1-**T4**-95

Group Metering Inline Current Transformer Cabinets
Group Metering
Metering Products V1-**T4**-116

H

Handle Lockdogs
Type CH Loadcenters and Circuit Breakers
Accessories V1-**T1**-38

Handle Lockoffs
Type BR Loadcenters and Circuit Breakers
Accessories V1-**T1**-85

Type CH Loadcenters and Circuit Breakers
Accessories V1-**T1**-38

Handle Ties
Accessories
Type CH Loadcenters and Circuit Breakers V1-**T1**-38
Type BR Loadcenters and Circuit Breakers
Accessories V1-**T1**-85

Hatteras Light
Marina Power and Lighting Equipment
Power Pedestals V1-**T5**-69

Hold-Down Kits
Type BR Loadcenters and Circuit Breakers
Accessories V1-**T1**-85

Hose and Cable Brackets
Marina Power and Lighting Equipment/RV Park Hook-Ups
Accessories V1-**T5**-75

House Panels
Meter Breakers
Accessories V1-**T4**-77
Metering Products V1-**T4**-75

I

Instrument Rated Sockets
Metering Products V1-**T4**-25, V1-**T4**-26

Isolation Plate
Marina Power and Lighting Equipment/RV Park Hook-Ups
Accessories V1-**T5**-75

L

Lens
Marina Power and Lighting Equipment/RV Park Hook-Ups
Accessories V1-**T5**-77

Life Ring
Marina Power and Lighting Equipment/RV Park Hook-Ups
Accessories V1-**T5**-77

Light and Lens Assembly
Marina Power and Lighting Equipment/RV Park Hook-Ups
Accessories V1-**T5**-75

Light Fuse
Marina Power and Lighting Equipment/RV Park Hook-Ups
Accessories V1-**T5**-76, V1-**T5**-77

Light Holder
Marina Power and Lighting Equipment/RV Park Hook-Ups
Accessories V1-**T5**-77

Lighthouse
Marina Power and Lighting Equipment
Power Pedestals V1-**T5**-54

Lighthouse—SS
Marina Power and Lighting Equipment
Power Pedestals V1-**T5**-58

Liquid Cooled Generator
Standby Generator V1-**T3**-4

Liquid Cooled Standby
Standby Generator System V1-**T3**-2

Loadcenter Interiors/OEM Loadcenters
Loadcenters and Circuit Breakers V1-**T1**-89–V1-**T1**-93

Loadcenters and Circuit Breakers . V1-**T1**-1–V1-**T1**-95, V1-**T1**-97–V1-**T1**-100
Classified Circuit Breakers V1-**T1**-96–V1-**T1**-100
Accessories V1-**T1**-99
Type CH Replacement Breakers V1-**T1**-97
Enclosed Breakers V1-**T1**-94–V1-**T1**-95
Loadcenter Interiors/OEM Loadcenters . . . V1-**T1**-89–V1-**T1**-93
Type BR V1-**T1**-42–V1-**T1**-70
Accessories V1-**T1**-61
BR Specialty Products
BR Circuit Breakers V1-**T1**-76
BR Quick Connect Neutral Loadcenters V1-**T1**-57
Riser Panel V1-**T1**-59
Spa Panels V1-**T1**-58
Type BR Renovation Loadcenter V1-**T1**-60
Type BR Retrofit Interior Kits V1-**T1**-73
Common Trip Quadplex Breakers V1-**T1**-83
Convertible Loadcenters MCB V1-**T1**-51
Convertible Loadcenters MLO V1-**T1**-51
Plug-On Circuit Breakers V1-**T1**-76
Quick-Pro V1-**T1**-60
Single-Phase V1-**T1**-48
Three-Phase V1-**T1**-54
Type CH V1-**T1**-2–V1-**T1**-28
Accessories V1-**T1**-22
CH Circuit Breakers V1-**T1**-31
CH Specialty Products
Non-Metallic Loadcenter V1-**T1**-21
Plug-On Neutral Loadcenter V1-**T1**-17
Spa Panels V1-**T1**-14
Surge Panel V1-**T1**-15
Type CH Renovation Loadcenter V1-**T1**-18
Type CH Retrofit Interior Kits V1-**T1**-19
Convertible Loadcenters MCB V1-**T1**-11
Convertible Loadcenters MLO V1-**T1**-11
Single-Phase V1-**T1**-7
Three-Phase V1-**T1**-12

M

Main and Sub-Feed Lug Blocks
Type BR Loadcenters and Circuit Breakers
Accessories V1-**T1**-61

Main Breaker Lug Kits
Type BR Loadcenters and Circuit Breakers
Accessories V1-**T1**-85
Type CH Loadcenters and Circuit Breakers
Accessories V1-**T1**-38

Main Door
Marina Power and Lighting Equipment/RV Park Hook-Ups
Accessories V1-**T5**-75, V1-**T5**-77

Main Housing
Marina Power and Lighting Equipment/RV Park Hook-Ups
Accessories V1-**T5**-75–V1-**T5**-77

Main Lugs
Type BR Loadcenters and Circuit Breakers
Accessories V1-**T1**-61

Main Service Modules
Group Metering
Metering Products V1-**T4**-101

Main Tenant Circuit Breaker
Group Metering
Metering Products V1-**T4**-96, V1-**T4**-98, V1-**T4**-127, V1-**T4**-136

Manual Transfer Switches V1-**T3**-16–V1-**T3**-19
Emergency Generator Panels V1-**T3**-16
Emergency Power Panels V1-**T3**-16
Generator Panels V1-**T3**-18
Indoor and Outdoor Designs V1-**T3**-17
Indoor and Outdoor Designs V1-**T3**-16
Standard Manual Transfer Switch V1-**T3**-18
Switched Neutral Manual Transfer Switch V1-**T3**-18

Marina Power and Lighting Equipment
Power Pedestals V1-**T5**-2, V1-**T5**-51–V1-**T5**-90
Admiral—SS V1-**T5**-62
Digital Electronic Kilowatthour Meters V1-**T5**-81
Distribution Equipment—Ground Fault Monitor V1-**T5**-82
Distribution Equipment—MegaYacht Powerpoint . . V1-**T5**-83
Distribution Equipment—Panels V1-**T5**-89
Distribution Equipment—Substations V1-**T5**-86
Distribution Equipment—Transformers V1-**T5**-90
Firehouse V1-**T5**-73
Hatteras Light V1-**T5**-69
Lighthouse V1-**T5**-54
Lighthouse—SS V1-**T5**-58
Mariner V1-**T5**-80
Newport Harbor Mate V1-**T5**-65
Smart Start V1-**T5**-79

Marina Power and Lighting Equipment/RV Park Hook-Ups
Power Pedestals
Accessories V1-**T5**-75

Mariner
Marina Power and Lighting Equipment
Power Pedestals V1-**T5**-80

Mechanical Interlock Cover
Metering Products
Meter Breakers V1-**T4**-65

Mechanical Interlock Covers
Type BR Loadcenters and Circuit Breakers
Accessories V1-**T1**-64
Type CH Loadcenters and Circuit Breakers
Accessories V1-**T1**-23

Mechanical Interlocks
Type BR Loadcenters and Circuit Breakers
Accessories V1-**T1**-86
Type CH Loadcenters and Circuit Breakers
Accessories V1-**T1**-23, V1-**T1**-38

Mechanical Lugs
Metering Products V1-**T4**-34

Meter Breakers
Metering Products V1-**T4**-37–V1-**T4**-87
Accessories V1-**T4**-77
Aluminum Meter Breakers V1-**T4**-87
CH Style Renovation Solutions V1-**T4**-86
Commercial Safety Sockets V1-**T4**-83
EUSERC Requirements Service Entrance Devices . V1-**T4**-48
House Panels V1-**T4**-75
Mechanical Interlock Cover V1-**T4**-65
Non-EUSERC Combination Service Entrance Devices . V1-**T4**-39
Residential Meter Breakers V1-**T4**-37
West Coast All-In-One Design V1-**T4**-59

Meter Packs
Group Metering
Metering Products V1-**T4**-90

Metering Products V1-**T4**-1–V1-**T4**-149
Commercial Lever Bypass Sockets V1-**T4**-10–V1-**T4**-17
Communications Grounding Device V1-**T4**-35, V1-**T4**-36
Cross-Reference V1-**T4**-31
Group Metering V1-**T4**-88–V1-**T4**-149
Accessories. . . V1-**T4**-117, V1-**T4**-138, V1-**T4**-139, V1-**T4**-141
Commercial Meter Stack Modules V1-**T4**-129
Group Metering Inline Current Transformer Cabinets . V1-**T4**-116
Main Service Modules V1-**T4**-101
Main Tenant Circuit Breaker . V1-**T4**-96, V1-**T4**-98, V1-**T4**-127, V1-**T4**-136
Meter Packs V1-**T4**-90
Phase Balanced Stack V1-**T4**-128
Renewal Parts V1-**T4**-140, V1-**T4**-142
Residential and Commercial Applications V1-**T4**-88
Residential Meter Stacks V1-**T4**-118
Surge Metering V1-**T4**-115
Type CCV Tenant Main Circuit Breaker V1-**T4**-95
Instrument Rated Sockets V1-**T4**-25, V1-**T4**-26
Mechanical Lugs V1-**T4**-34
Meter Breakers V1-**T4**-37–V1-**T4**-87
Accessories V1-**T4**-77
Aluminum Meter Breakers V1-**T4**-87
CH Style Renovation Solutions V1-**T4**-86
Commercial Safety Sockets V1-**T4**-83
EUSERC Requirements Service Entrance Devices . . V1-**T4**-48
House Panels V1-**T4**-75
Mechanical Interlock Cover V1-**T4**-65
Non-EUSERC Combination Service Entrance Devices . V1-**T4**-39
Residential Meter Breakers V1-**T4**-37
West Coast All-In-One Design V1-**T4**-59
Meter Socket Accessories
Accessories V1-**T4**-30
Multiple Position Horizontal Ganged Sockets . V1-**T4**-18–V1-**T4**-24
Residential Pedestals V1-**T4**-27, V1-**T4**-28
Single Meter Sockets V1-**T4**-2–V1-**T4**-9
Residential Ringless Type Cover V1-**T4**-4

Mobile Home Panels
Accessories
Power Pedestals V1-**T5**-23
Power Pedestals V1-**T5**-2, V1-**T5**-21–V1-**T5**-27

Molded Case Switch
Air Conditioning Disconnects V1-**T6**-2, V1-**T6**-4

Mounting Bases
Type CH Loadcenters and Circuit Breakers
Accessories V1-**T1**-38

Mounting Brackets
Marina Power and Lighting Equipment/RV Park Hook-Ups
Accessories V1-**T5**-77

Mounting Feet
Marina Power and Lighting Equipment/RV Park Hook-Ups
Accessories V1-**T5**-76

Multiple Position Horizontal Ganged Sockets
Metering Products V1-**T4**-18–V1-**T4**-24

N

Neutral Bar Accessories
Type CH Loadcenters and Circuit Breakers
Accessories V1-**T1**-25

Newport Camp Mate Power Pedestal
RV Park Hook-Ups
Power Pedestals V1-**T5**-36

Newport Harbor Mate
Marina Power and Lighting Equipment
Power Pedestals V1-**T5**-65

Non-EUSERC Combination Service Entrance Devices
Metering Products
Meter Breakers V1-**T4**-39

Non-Metallic Loadcenter
CH Specialty Products
Type CH
Loadcenters and Circuit Breakers V1-**T1**-21

O

Outdoor Communication Grounding Device
Surge Protection Devices and Lightning Arresters V1-**T2**-6

P

Padlock Brackets
Type BR Loadcenters and Circuit Breakers
Accessories V1-**T1**-86

Padmount Adapter
Mobile Home Panels
Accessories V1-**T5**-23

Pad-Mount Bracket
Temporary Power/RV Park
Accessories V1-**T5**-7

Park Light Power Pedestal
RV Park Hook-Ups
Power Pedestals V1-**T5**-39

Pedestal Extension
Mobile Home Panels
Accessories V1-**T5**-23
Temporary Power/RV Park
Accessories V1-**T5**-7

Pedestal Units
Temporary Power/RV Park
Power Pedestals V1-**T5**-16

Phase Adapters
Type CH Loadcenters and Circuit Breakers
Accessories V1-**T1**-25

Phase Balanced Stack
Group Metering
Metering Products V1-**T4**-128

Phone, Cable, Internet Assemblies
Marina Power and Lighting Equipment/RV Park Hook-Ups
Accessories. V1-**T5**-76

Plug-On Circuit Breakers
Type BR
Loadcenters and Circuit Breakers V1-**T1**-76

Plug-On Neutral Loadcenter
CH Specialty Products
Type CH
Loadcenters and Circuit Breakers V1-**T1**-17

Plug-On Surge Protection
Surge Protection Devices and Lightning Arrester V1-**T2**-3

Portable Generators
Residential Standby Backup Power Solutions V1-**T3**-7–V1-**T3**-10

Power Inlet Box
Manual Transfer Switches V1-**T3**-18

Power Outlet Panels
Power Pedestals V1-**T5**-2

Power Pedestals V1-**T5**-1–V1-**T5**-90
Marina Power and Lighting Equipment . V1-**T5**-2, V1-**T5**-51–V1-**T5**-90
Admiral—SS V1-**T5**-62
Digital Electronic Kilowatthour Meters V1-**T5**-81
Distribution Equipment—Ground Fault Monitor V1-**T5**-82
Distribution Equipment—MegaYacht Powerpoint . . V1-**T5**-83
Distribution Equipment—Panels V1-**T5**-89
Distribution Equipment—Substations. V1-**T5**-86
Distribution Equipment—Transformers V1-**T5**-90
Firehouse V1-**T5**-73
Hatteras Light V1-**T5**-69
Lighthouse V1-**T5**-54
Lighthouse—SS V1-**T5**-58
Mariner V1-**T5**-80
Newport Harbor Mate. V1-**T5**-65
Smart Start V1-**T5**-79
Marina Power and Lighting Equipment/RV Park Hook-Ups
Accessories. V1-**T5**-75
Mobile Home Panels V1-**T5**-2, V1-**T5**-21–V1-**T5**-27
Accessories. V1-**T5**-23
Power Outlet Panels V1-**T5**-2
RV Park Hook-Ups V1-**T5**-28–V1-**T5**-50
Digital Electronic Kilowatthour Meters V1-**T5**-44
Distribution Equipment—Panels V1-**T5**-49
Distribution—Ground Fault Monitor V1-**T5**-45
Distribution—Substations V1-**T5**-46
Distribution—Transformers. V1-**T5**-50
Firehouse V1-**T5**-42
Newport Camp Mate Power Pedestal V1-**T5**-36
Park Light Power Pedestal V1-**T5**-39
Powerhouse Power Pedestal V1-**T5**-30
Powerhouse Stainless Steel Power Pedestal. V1-**T5**-33
Temporary Power/RV Park. V1-**T5**-3–V1-**T5**-20
Accessories. V1-**T5**-7
Pedestal Units. V1-**T5**-16
Surface Units V1-**T5**-10

Powerhouse Power Pedestal
RV Park Hook-Ups
Power Pedestals V1-**T5**-30

Powerhouse Stainless Steel Power Pedestal
RV Park Hook-Ups
Power Pedestals V1-**T5**-33

Pullouts, Fused and Non-Fused
Air Conditioning Disconnects V1-**T6**-2, V1-**T6**-4

Q

Quick Connect Design
Surge Protection Devices and Lightning Arresters V1-**T2**-6

Quick-Pro
Type BR
Loadcenters and Circuit Breakers V1-**T1**-60

R

Rainproof Conduit Hub
Temporary Power/RV Park
Accessories V1-**T5**-7

Rainproof Conduit Hubs
Type BR Loadcenters and Circuit Breakers
Accessories V1-**T1**-66
Type CH Loadcenters and Circuit Breakers
Accessories V1-**T1**-25

Raintight Enclosure
Surge Protection Devices and Lightning Arresters V1-**T2**-6

Receptacles
Marina Power and Lighting Equipment/RV Park Hook-Ups
Accessories V1-**T5**-75

Renewal Parts
Group Metering
Metering Products V1-**T4**-140, V1-**T4**-142
Temporary Power/RV Park
Accessories V1-**T5**-8

Residential and Commercial Applications
Group Metering
Metering Products V1-**T4**-88

Residential Meter Breakers
Meter Breakers
Metering Products V1-**T4**-37

Residential Meter Stacks
Group Metering
Metering Products V1-**T4**-118

Residential Pedestals
Metering Products V1-**T4**-27, V1-**T4**-28

Residential Ringless Type Cover
Single Meter Sockets
Metering Products V1-**T4**-4

Residential Standby Backup Power Solutions. . . . V1-**T3**-1–V1-**T3**-15
Automatic Transfer Switches V1-**T3**-11–V1-**T3**-15
Manual Transfer Switches V1-**T3**-16–V1-**T3**-19
Portable Generators V1-**T3**-7–V1-**T3**-10
Standby Generator V1-**T3**-2–V1-**T3**-6

Riser Panel
BR Specialty Products
Type BR
Loadcenters and Circuit Breakers V1-**T1**-59

RV Park Hook-Ups
Power Pedestals V1-**T5**-28–V1-**T5**-50
Digital Electronic Kilowatthour Meters V1-**T5**-44
Distribution Equipment—Panels. V1-**T5**-49
Distribution—Ground Fault Monitor V1-**T5**-45
Distribution—Substations V1-**T5**-46
Distribution—Transformers. V1-**T5**-50
Firehouse V1-**T5**-42
Newport Camp Mate Power Pedestal V1-**T5**-36
Park Light Power Pedestal V1-**T5**-39
Powerhouse Power Pedestal V1-**T5**-30
Powerhouse Stainless Steel Power Pedestal. V1-**T5**-33

S

Safety Sockets, Commercial
Meter Breakers
Metering Products V1-**T4**-83

Service Entrance Surge Protection
Surge Protection Devices and Lightning Arresters V1-**T2**-2

Shunt Trip
Type BR Loadcenters and Circuit Breakers
Accessories. V1-**T1**-86
Type CH Loadcenters and Circuit Breakers
Accessories. V1-**T1**-39

Single Meter Sockets
Metering Products. V1-**T4**-2–V1-**T4**-9
Residential Ringless Type Cover. V1-**T4**-4

Single-Phase
Type BR
Loadcenters and Circuit Breakers. V1-**T1**-48
Type CH
Loadcenters and Circuit Breakers. V1-**T1**-7

Smart Start
Marina Power and Lighting Equipment
Power Pedestals. V1-**T5**-79

Spa Panels
BR Specialty Products
Type BR
Loadcenters and Circuit Breakers V1-**T1**-58
CH Specialty Products
Type CH
Loadcenters and Circuit Breakers V1-**T1**-14
Type BR. V1-**T1**-58

Spring Closure
Marina Power and Lighting Equipment/RV Park Hook-Ups
Accessories. V1-**T5**-75

Standard Manual Transfer Switch
Manual Transfer Switches. V1-**T3**-18

Standby Generator. V1-**T3**-2–V1-**T3**-6
Air Cooled Generators V1-**T3**-3
Liquid Cooled Generators V1-**T3**-4

Standby Generator System
Air Cooled Standby V1-**T3**-2
Liquid Cooled Standby. V1-**T3**-2

Strobe Light
Marina Power and Lighting Equipment/RV Park Hook-Ups
Accessories V1-**T5**-77

Surface Units
Temporary Power/RV Park
Power Pedestals V1-**T5**-10

Surge Installed Loadcenters
Surge Protection Devices and Lightning Arrester V1-**T2**-9

Surge Metering
Group Metering
Metering Products V1-**T4**-115

Surge Panel
CH Specialty Products
Type CH
Loadcenters and Circuit Breakers V1-**T1**-15

Surge Protection V1-**T2**-1–V1-**T2**-10
Factory-Installed Surge Protection V1-**T2**-2, V1-**T2**-9
Plug-On Surge Protection V1-**T2**-3
Type 3 Point-of-Use Surge Protection V1-**T2**-3
Type BRSURGE V1-**T2**-3
Type BRSURGECSA. V1-**T2**-3
Type CHQSA V1-**T2**-3
Type CHSA. V1-**T2**-3
Service Entrance V1-**T2**-2
Surge Installed Loadcenters V1-**T2**-9
Surge Protection Devices and Lightning Arresters . V1-**T2**-2–V1-**T2**-10
Surge Ready Loadcenter. V1-**T2**-2, V1-**T2**-9
Two-Stage Protection V1-**T2**-2, V1-**T2**-3
UL 1449 3rd Edition Surge Protection
Type 1. . . . . V1-**T2**-2
Type 1 CHSP V1-**T2**-4
Type 2. . . . . V1-**T2**-2
Type 2 Plug-On. V1-**T2**-10
UL 1449 3rd Edition, cUL
Type 2 CHSP Service Entrance V1-**T2**-5

Surge Protection Devices and Lightning Arresters V1-**T2**-2–V1-**T2**-10
Surge Protection Receptacles with LED Indicators and Audible Alarm V1-**T2**-8
Type BR and CH Surge Breakers V1-**T2**-7

Surge Protection Receptacles with LED Indicators and Audible Alarm
Surge Protection Devices and Lightning Arresters V1-**T2**-8

Surge Ready
Type CH
Loadcenters and Circuit Breakers V1-**T1**-16

Surge Ready Loadcenter. V1-**T2**-9
Surge Protection Devices and Lightning Arresters V1-**T2**-2

Switched Neutral Manual Transfer Switch
Manual Transfer Switches V1-**T3**-18

T

Temporary Power/RV Park
Power Pedestals V1-**T5**-3–V1-**T5**-20
Accessories V1-**T5**-7
Pedestal Units V1-**T5**-16
Surface Units V1-**T5**-10

Three-Phase
Type BR
Loadcenters and Circuit Breakers V1-**T1**-54
Type CH
Loadcenters and Circuit Breakers V1-**T1**-12

Transfer Panels
Manual Transfer Switches V1-**T3**-16

Two-Stage Protection
Surge Protection Devices and Lightning Arresters V1-**T2**-2, V1-**T2**-3

Type 1 Surge Protective Device
Surge Protection Devices and Lightning Arresters V1-**T2**-2

Type 2 Surge Protective Device
Surge Protection Devices and Lightning Arresters V1-**T2**-2

Type 3 Point-of-Use Surge Protection
Surge Protection Devices and Lightning Arresters V1-**T2**-3

Type BR
Loadcenters and Circuit Breakers V1-**T1**-42–V1-**T1**-70
Accessories. V1-**T1**-61
BR Specialty Products
BR Circuit Breakers V1-**T1**-76
BR Quick Connect Neutral Loadcenters. V1-**T1**-57
Riser Panel V1-**T1**-59
Spa Panels V1-**T1**-58
Type BR Renovation Loadcenter V1-**T1**-60
Type BR Retrofit Interior Kits V1-**T1**-73
Common Trip Quadplex Breakers. V1-**T1**-83
Convertible Loadcenters MCB V1-**T1**-51
Convertible Loadcenters MLO V1-**T1**-51
Plug-On Circuit Breakers. V1-**T1**-76
Quick-Pro V1-**T1**-60
Single-Phase V1-**T1**-48
Spa Panels V1-**T1**-58
Three-Phase V1-**T1**-54

Type BR and CH Surge Breakers
Surge Protection Devices and Lightning Arresters V1-**T2**-7

Type BR Renovation Loadcenter
BR Specialty Products
Type BR
Loadcenters and Circuit Breakers V1-**T1**-60

Type BR Retrofit Interior Kits
BR Specialty Products
Type BR
Loadcenters and Circuit Breakers V1-**T1**-73

Type BRSURGE Surge Protection
Surge Protection Devices and Lightning Arresters V1-**T2**-3

Type CCV Tenant Main Circuit Breaker
Group Metering
Metering Products V1-**T4**-95

Type CH. V1-**T1**-16
Loadcenters and Circuit Breakers V1-**T1**-2–V1-**T1**-28
Accessories. V1-**T1**-22
CH Circuit Breakers. V1-**T1**-31
CH Specialty Products
Non-Metallic Loadcenter V1-**T1**-21
Plug-On Neutral Loadcenter. V1-**T1**-17
Spa Panels V1-**T1**-14

Surge Panel V1-**T1**-15
Type CH Renovation Loadcenter V1-**T1**-18
Type CH Retrofit Interior Kits V1-**T1**-19
Convertible Loadcenters MCB V1-**T1**-11
Convertible Loadcenters MLO V1-**T1**-11
Single-Phase V1-**T1**-7
Surge Ready V1-**T1**-16
Three-Phase V1-**T1**-12

Type CH Renovation Loadcenter
CH Specialty Products
Type CH
Loadcenters and Circuit Breakers V1-**T1**-18

Type CH Replacement Breakers
Classified Circuit Breakers
Loadcenters and Circuit Breakers V1-**T1**-97

Type CH Retrofit Interior Kits
CH Specialty Products
Type CH
Loadcenters and Circuit Breakers V1-**T1**-19

Type CHQSA Surge Protection
Surge Protection Devices and Lightning Arresters V1-**T2**-3

Type CHSA Surge Protection
Surge Protection Devices and Lightning Arresters V1-**T2**-3

U

UL 1449 3rd Edition
Surge Protection Devices and Lightning Arrester V1-**T2**-2

W

Water Assemblies
Marina Power and Lighting Equipment/RV Park Hook-Ups
Accessories V1-**T5**-76

West Coast All-In-One Design
Meter Breakers
Accessories V1-**T4**-60
Metering Products V1-**T4**-59

Numerics

3-Pack
Surge Protection Devices and Lightning Arresters V1-**T2**-6