PASS & SEYMOUR®

Commercial Grade Switches 15 & 20A, 120/277VAC

Commercial ruggedness in traditional side wire switches.

CS15AC1, CS15AC3, CS20AC1, CS20AC3

Like our other commercial switches, these reliable performers feature high-strength polycarbonate toggles, single-piece brass alloy contact arms, nylon covers and heavy-gauge steel straps to withstand hard use and ensure a long service life. Fast make and positive break action minimizes arcing.

Features & Benefits

One-piece plated steel strap for corrosion resistance

Heavy-duty bumpers for quiet, smooth operation

Oversized silver-alloy contacts for long life and better heat dissipation

Heavy-duty, brass alloy, one-piece contact arm virtually eliminates contact bounce

Shallow design for easier installation

CS20AC1LA

Glass-reinforced nylon back body for durability and strength

Locking support provides resistance to face and back body separation

Side wire with #14 – #10 AWG copper or copper-clad wire

Cam control and spring actuator for positive "makes and breaks" with a minimum of arcing

3rd Party Compliance

UL Listed, File Number E140597, Standard UL20, General Use Snap Switches. Federal Specification WS896. cULus Listed, File Number LR17446, Standard CSA-C22.2 No. 111, General Use Snap Switches. Conforms to NEMA WD-1 and WD-6.

Technical Information

Performance	
Electrical	
Dielectric Withstand Voltage	1500V Minimum
Maximum Working Voltage	277VAC
Overload	Minimum 4.8 times rated current for 100 cycles
Temperature Rise	30°C maximum at rated current
Maximum Continuous Current	277VAC
Endurance	50,000 cycles minimum, resistive, inductive, tungsten filament lamp load (Fed Spec)
Mechanical	
Terminal Accommodations	#14 AWG – #10 AWG
Environmental	
Flammability	UL94 V2
Operating Temperature	Maximum continuous +115°C, minimum -40°C

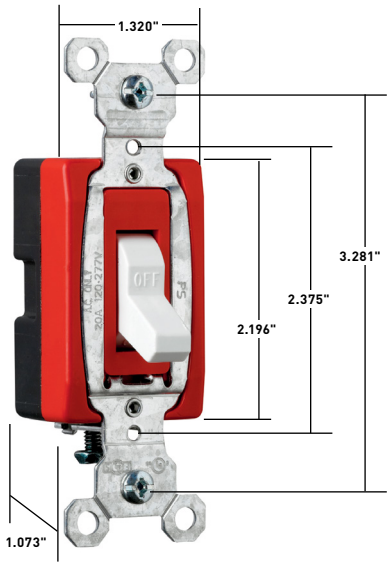

Dimensions for 15 & 20 Amp

Materials	
Back Body	Glass-Reinforced Nylon
Front Body	Nylon
Toggle	Thermoplastic Polycarbonate
Terminals	Brass
Terminal Screws	Tri-Drive Brass-Plated Steel
Strap	Plated Steel
Contacts	Silver Cadmium Oxide
Spring Arm	Brass
Bumper	Rubber
Spring	Zinc-Plated Steel
Ground Terminal	Brass
Ground Screw	Tri-Drive Zinc-Plated Steel

HP Conversion Table – Switches	
15 Amp	1/2 Horsepower at 120VAC; 2 Horsepower at 240VAC
20 Amp	1 Horsepower at 120VAC; 2 Horsepower at 240VAC

15 Amp Cover	Blue
20 Amp Cover	Red

Warranty
1 Year

Ordering Information

Commercial Grade Switches

Catalog Number		Rating		
Single Pole	**Three-Way**	**A**	**VAC**	**Color**
CS15AC1I	**CS15AC3I**	15	120/277	Ivory
CS15AC1W	**CS15AC3W**	15	120/277	White
CS15AC1	**CS15AC3**	15	120/277	Brown
CS15AC1GRY	**CS15AC3GRY**	15	120/277	Gray
CS15AC1BK	**CS15AC3BK**	15	120/277	Black
CS15AC1LA	**CS15AC3LA**	15	120/277	Light Almond
CS20AC1I	**CS20AC3I**	20	120/277	Ivory
CS20AC1W	**CS20AC3W**	20	120/277	White
CS20AC1	**CS20AC3**	20	120/277	Brown
CS20AC1GRY	**CS20AC3GRY**	20	120/277	Gray
CS20AC1LA	**CS20AC3LA**	20	120/277	Light Almond

Vertical Markets

- **Retail**
- **Office**
- **Hospitality/Lodging**
- **Multiple Dwelling**

Also available

- **Plug Load Control Devices**
- **Hospital Grade Devices**
- **PlugTail® Devices**
- **SPD & Isolated Ground Devices**
- **Ground Continuity Monitoring Devices (GCM)**
- **Straight Blade Plugs & Connectors**
- **Turnlok® Locking Devices**
- **IEC 309 Industrial Products**
- **Flexcor® Wire Mesh Grip**
- **USB Charging Devices**

The paper used to print this document is an environmentally responsible paper with 10% post consumer waste, with FSC and SFI Chain of Custody certifications, Lacey Act complaint. 100% of the electricity used to manufacture Flo sheets is generated with Green-e certified renewable energy.

All brand and product names referenced in this document are registered trademarks or trademarks of their respective holders.

Legrand, North America
60 Woodlawn Street
West Hartford, CT 06110
1.877.BY.LEGRAND (295.3472)
www.legrand.us

905.738.9195
www.legrand.ca

FOLLOW US

SF105R3 April 2018 **©2018 Legrand All Rights Reserved**

PASS & SEYMOUR®

Commercial Grade Switches 15 & 20A, 120/277VAC

Commercial ruggedness in traditional side wire switches.

CS15AC1, CS15AC3, CS20AC1, CS20AC3

Like our other commercial switches, these reliable performers feature high-strength polycarbonate toggles, single-piece brass alloy contact arms, nylon covers and heavy-gauge steel straps to withstand hard use and ensure a long service life. Fast make and positive break action minimizes arcing.

Features & Benefits

One-piece plated steel strap for corrosion resistance

Heavy-duty bumpers for quiet, smooth operation

Oversized silver-alloy contacts for long life and better heat dissipation

Heavy-duty, brass alloy, one-piece contact arm virtually eliminates contact bounce

Shallow design for easier installation

CS20AC1LA

Glass-reinforced nylon back body for durability and strength

Locking support provides resistance to face and back body separation

Side wire with #14 – #10 AWG copper or copper-clad wire

Cam control and spring actuator for positive "makes and breaks" with a minimum of arcing

3rd Party Compliance

UL Listed, File Number E140597, Standard UL20, General Use Snap Switches. Federal Specification WS896. cULus Listed, File Number LR17446, Standard CSA-C22.2 No. 111, General Use Snap Switches. Conforms to NEMA WD-1 and WD-6.

Technical Information

Performance	
Electrical	
Dielectric Withstand Voltage	1500V Minimum
Maximum Working Voltage	277VAC
Overload	Minimum 4.8 times rated current for 100 cycles
Temperature Rise	30°C maximum at rated current
Maximum Continuous Current	277VAC
Endurance	50,000 cycles minimum, resistive, inductive, tungsten filament lamp load (Fed Spec)
Mechanical	
Terminal Accommodations	#14 AWG – #10 AWG
Environmental	
Flammability	UL94 V2
Operating Temperature	Maximum continuous +115°C, minimum -40°C

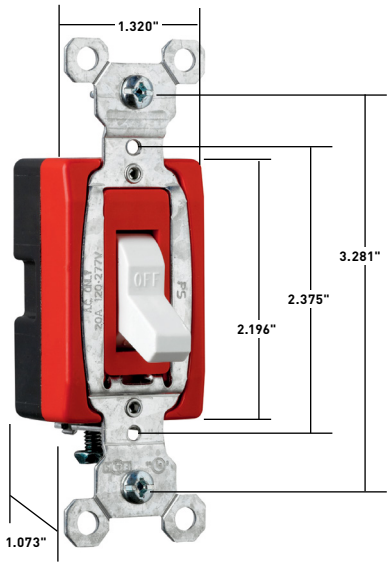

Dimensions for 15 & 20 Amp

Materials	
Back Body	Glass-Reinforced Nylon
Front Body	Nylon
Toggle	Thermoplastic Polycarbonate
Terminals	Brass
Terminal Screws	Tri-Drive Brass-Plated Steel
Strap	Plated Steel
Contacts	Silver Cadmium Oxide
Spring Arm	Brass
Bumper	Rubber
Spring	Zinc-Plated Steel
Ground Terminal	Brass
Ground Screw	Tri-Drive Zinc-Plated Steel

HP Conversion Table – Switches	
15 Amp	1/2 Horsepower at 120VAC; 2 Horsepower at 240VAC
20 Amp	1 Horsepower at 120VAC; 2 Horsepower at 240VAC

15 Amp Cover	Blue
20 Amp Cover	Red

Warranty
1 Year

Ordering Information

Commercial Grade Switches

Catalog Number		Rating		
Single Pole	**Three-Way**	**A**	**VAC**	**Color**
CS15AC1I	**CS15AC3I**	15	120/277	Ivory
CS15AC1W	**CS15AC3W**	15	120/277	White
CS15AC1	**CS15AC3**	15	120/277	Brown
CS15AC1GRY	**CS15AC3GRY**	15	120/277	Gray
CS15AC1BK	**CS15AC3BK**	15	120/277	Black
CS15AC1LA	**CS15AC3LA**	15	120/277	Light Almond
CS20AC1I	**CS20AC3I**	20	120/277	Ivory
CS20AC1W	**CS20AC3W**	20	120/277	White
CS20AC1	**CS20AC3**	20	120/277	Brown
CS20AC1GRY	**CS20AC3GRY**	20	120/277	Gray
CS20AC1LA	**CS20AC3LA**	20	120/277	Light Almond

Vertical Markets

- **Retail**
- **Office**
- **Hospitality/Lodging**
- **Multiple Dwelling**

Also available

- **Plug Load Control Devices**
- **Hospital Grade Devices**
- **PlugTail® Devices**
- **SPD & Isolated Ground Devices**
- **Ground Continuity Monitoring Devices (GCM)**
- **Straight Blade Plugs & Connectors**
- **Turnlok® Locking Devices**
- **IEC 309 Industrial Products**
- **Flexcor® Wire Mesh Grip**
- **USB Charging Devices**

The paper used to print this document is an environmentally responsible paper with 10% post consumer waste, with FSC and SFI Chain of Custody certifications, Lacey Act complaint. 100% of the electricity used to manufacture Flo sheets is generated with Green-e certified renewable energy.

All brand and product names referenced in this document are registered trademarks or trademarks of their respective holders.

Legrand, North America
60 Woodlawn Street
West Hartford, CT 06110
1.877.BY.LEGRAND (295.3472)
www.legrand.us

905.738.9195
www.legrand.ca

FOLLOW US

SF105R3 April 2018 **©2018 Legrand All Rights Reserved**