Catalog Number
Notes
Type

Contractor Select™

CSS

LED Strip Light

The light-duty, dimmable, damp-location and DLC® listed CSS LED strip light can easily mount individually to a ceiling, horizontal and vertical wall, or by continuous row. The size and versatility makes it suitable for tight spaces, task lighting, restrooms, under/over cabinet and storage closets.

FEATURES:

- Inspired by classic fluorescent strip channels, this LED fixture offers a traditional appearance that incorporates the latest technology
- Quick and simple to install with the snap-lock tool-less channel cover
- Features a low-glare diffuse lens for enhanced aesthetic

Catalog Number	UPC	Description	Lumens	Wattage	Voltage	Color Temperature	Color Rendering Index	Pallet Quantity
CSS L48 4000LM MVOLT 40K 80CRI	00193048852622	4' MVOLT LED Strip Light	4333	38	MVOLT (120-277)	4000K	80CRI	98
CSS L96 8000LM MVOLT 40K 80CRI	00193048852721	8' MVOLT LED Strip Light	8377	58	MVOLT (120-277)	4000K	80CRI	102
CSS L24 AL015 MVOLT SWW3 80CRI	00197589015300	2' MVOLT Switchable LED Strip Light	1610-2648	13, 16, 19	MVOLT (120-277)	35K/40K/50K	80CRI	336
CSS L48 AL03 MVOLT SWW3 80CRI	00193048852677	4' MVOLT Switchable LED Strip Light	3432-5585	22, 29, 37	MVOLT (120-277)	35K/40K/50K	80CRI	98
CSS L96 AL04 MVOLT SWW3 80CRI	00193048852738	8' MVOLT Switchable LED Strip Light	6528-10907	43, 58, 74	MVOLT (120-277)	35K/40K/50K	80CRI	102
CSS L24 AL015 UVOLT SWW3 80CRI M6 ‡	197589330625	2' UVOLT Switchable LED Strip Light	1609-2648	13, 16, 19	UVOLT (120-347)	35K/40K/50K	80CRI	336
CSS L48 AL03 UVOLT SWW3 80CRI ‡	197589330700	4' UVOLT Switchable LED Strip Light	3402-5346	22, 29, 37	UVOLT (120-347)	35K/40K/50K	80CRI	90
CSS L96 AL04 UVOLT SWW3 80CRI ‡	197589330670	8' UVOLT Switchable LED Strip Light	6528-10907	48, 53, 74	UVOLT (120-347)	35K/40K/50K	80CRI	90

More configurations are available. Click here or visit www.acuitybrands.com and search for CSS LED.

NOTE: ‡ indicates configurations stocked for Canada only.

Accessories: *Order as separate catalog number.*

HC36 M12	Chain hanger and jack chain, 36" (pair)
ZACVH	Aircraft cable 10' (one pair)
SQ	5/8" Swivel-stem hanger (specify length in 2" increments up to 48")
Y J10	Y hanger in multiples of 10 (five pair)
WGCSS	Wiregaurd with Mounting hardware (one 4ft)
MNLK JBOXCVR M12	Junction box cover with hardware, white

Specifications

INTENDED USE:

Inspired by classic fluorescent strip channels, this LED fixture offers a traditional appearance that incorporates the latest technology. Available in several color temperatures, lumen packages and lengths. Ideal for use in commercial, retail, office, warehouse and display applications.

Certain airborne contaminants may adversely affect the functioning of LEDs and other electronic components, depending on various factors such as concentrations of the contaminants, ventilation, and temperature at the end-user location. **Click here for a list of substances that may not be suitable for interaction with LEDs and other electronic components**.

CONSTRUCTION:

Compact-design channel and cover are formed from code-gauge, cold-rolled steel.

Easy to install row aligner bracket included for continuous row mounting.

Finish: High-gloss, baked white enamel (standard).

OPTICS:

LEDs provide 80+ color rendering index (CRI) at 3500 K, 4000 K and 5000 K. Polycarbonate diffuse lens provides smooth, linear illumination. Lumen output exceeds 1,000 lumens per foot.

ELECTRICAL:

Luminaire Surge Protection Level: Designed to withstand up to 2.5kV/0.75kA per ANSI C82.77-5-2015. For applications requiring higher level of protection additional surge protection must be provided. Driver is standard 0-10V dimming class 2.

INSTALLATION:

Fixture may be surface or suspension mounted with appropriate mounting options (see accessories). Aligner locks in place for easy continuous row mounting.

LISTINGS:

CSA certified to US and Canadian safety standards and listed suitable for damp locations.

Minimum starting temperature at -22°F (-30°C). Maximum ambient operating temperature of 104˚F (40˚C) for 4ft models and 95˚F (35˚C) for 2ft and 8ft models.

DesignLights Consortium® (DLC) Premium qualified product and DLC qualified product. Not all versions of this product may be DLC Premium qualified or DLC qualified. Please check the DLC Qualified Products List at www.designlights.org/QPL to confirm which versions are qualified.

Suitable for use within closet spaces when installed per NEC 410.16 (A)(1) and 410.16(C)(3)(5) spacing requirements.

WARRANTY:

5-year limited warranty. This is the only warranty provided and no other statements in this specification sheet create any warranty of any kind. All other express and implied warranties are disclaimed. Complete warranty terms located at: www.acuitybrands.com/support/warranty/terms-and-conditions

Note: Actual performance may differ as a result of end-user environment and application. All values are design or typical values, measured under laboratory conditions at 25 °C. Specifications subject to change without notice.

Dimensions

All dimensions are inches (centimeters) unless otherwise indicated.

2FT ASSEMBLY

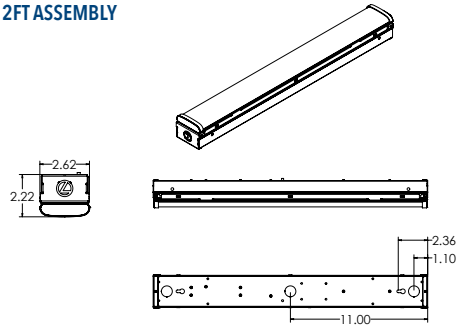

4FT ASSEMBLY

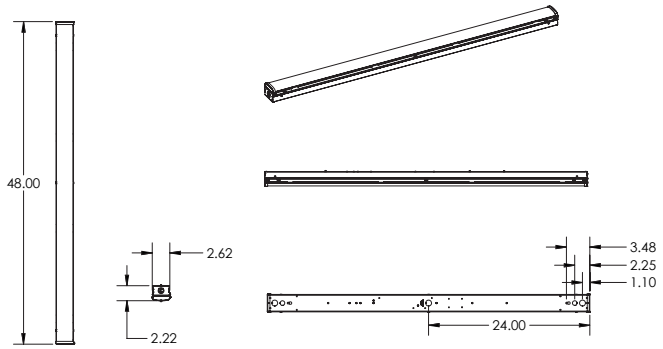

8FT ASSEMBLY

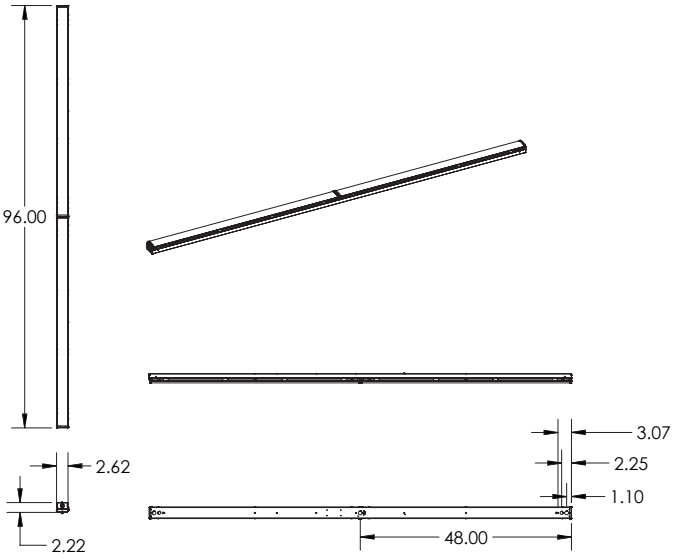

Catalog Number
Notes
Type

Contractor Select™

CSS

LED Strip Light

The light-duty, dimmable, damp-location and DLC® listed CSS LED strip light can easily mount individually to a ceiling, horizontal and vertical wall, or by continuous row. The size and versatility makes it suitable for tight spaces, task lighting, restrooms, under/over cabinet and storage closets.

FEATURES:

- Inspired by classic fluorescent strip channels, this LED fixture offers a traditional appearance that incorporates the latest technology
- Quick and simple to install with the snap-lock tool-less channel cover
- Features a low-glare diffuse lens for enhanced aesthetic

Catalog Number	UPC	Description	Lumens	Wattage	Voltage	Color Temperature	Color Rendering Index	Pallet Quantity
CSS L48 4000LM MVOLT 40K 80CRI	00193048852622	4' MVOLT LED Strip Light	4333	38	MVOLT (120-277)	4000K	80CRI	98
CSS L96 8000LM MVOLT 40K 80CRI	00193048852721	8' MVOLT LED Strip Light	8377	58	MVOLT (120-277)	4000K	80CRI	102
CSS L24 AL015 MVOLT SWW3 80CRI	00197589015300	2' MVOLT Switchable LED Strip Light	1610-2648	13, 16, 19	MVOLT (120-277)	35K/40K/50K	80CRI	336
CSS L48 AL03 MVOLT SWW3 80CRI	00193048852677	4' MVOLT Switchable LED Strip Light	3432-5585	22, 29, 37	MVOLT (120-277)	35K/40K/50K	80CRI	98
CSS L96 AL04 MVOLT SWW3 80CRI	00193048852738	8' MVOLT Switchable LED Strip Light	6528-10907	43, 58, 74	MVOLT (120-277)	35K/40K/50K	80CRI	102
CSS L24 AL015 UVOLT SWW3 80CRI M6 ‡	197589330625	2' UVOLT Switchable LED Strip Light	1609-2648	13, 16, 19	UVOLT (120-347)	35K/40K/50K	80CRI	336
CSS L48 AL03 UVOLT SWW3 80CRI ‡	197589330700	4' UVOLT Switchable LED Strip Light	3402-5346	22, 29, 37	UVOLT (120-347)	35K/40K/50K	80CRI	90
CSS L96 AL04 UVOLT SWW3 80CRI ‡	197589330670	8' UVOLT Switchable LED Strip Light	6528-10907	48, 53, 74	UVOLT (120-347)	35K/40K/50K	80CRI	90

More configurations are available. Click here or visit www.acuitybrands.com and search for CSS LED.

NOTE: ‡ indicates configurations stocked for Canada only.

Accessories: *Order as separate catalog number.*

HC36 M12	Chain hanger and jack chain, 36" (pair)
ZACVH	Aircraft cable 10' (one pair)
SQ	5/8" Swivel-stem hanger (specify length in 2" increments up to 48")
Y J10	Y hanger in multiples of 10 (five pair)
WGCSS	Wiregaurd with Mounting hardware (one 4ft)
MNLK JBOXCVR M12	Junction box cover with hardware, white

Specifications

INTENDED USE:

Inspired by classic fluorescent strip channels, this LED fixture offers a traditional appearance that incorporates the latest technology. Available in several color temperatures, lumen packages and lengths. Ideal for use in commercial, retail, office, warehouse and display applications.

Certain airborne contaminants may adversely affect the functioning of LEDs and other electronic components, depending on various factors such as concentrations of the contaminants, ventilation, and temperature at the end-user location. **Click here for a list of substances that may not be suitable for interaction with LEDs and other electronic components**.

CONSTRUCTION:

Compact-design channel and cover are formed from code-gauge, cold-rolled steel.

Easy to install row aligner bracket included for continuous row mounting.

Finish: High-gloss, baked white enamel (standard).

OPTICS:

LEDs provide 80+ color rendering index (CRI) at 3500 K, 4000 K and 5000 K. Polycarbonate diffuse lens provides smooth, linear illumination. Lumen output exceeds 1,000 lumens per foot.

ELECTRICAL:

Luminaire Surge Protection Level: Designed to withstand up to 2.5kV/0.75kA per ANSI C82.77-5-2015. For applications requiring higher level of protection additional surge protection must be provided. Driver is standard 0-10V dimming class 2.

INSTALLATION:

Fixture may be surface or suspension mounted with appropriate mounting options (see accessories). Aligner locks in place for easy continuous row mounting.

LISTINGS:

CSA certified to US and Canadian safety standards and listed suitable for damp locations.

Minimum starting temperature at -22°F (-30°C). Maximum ambient operating temperature of 104˚F (40˚C) for 4ft models and 95˚F (35˚C) for 2ft and 8ft models.

DesignLights Consortium® (DLC) Premium qualified product and DLC qualified product. Not all versions of this product may be DLC Premium qualified or DLC qualified. Please check the DLC Qualified Products List at www.designlights.org/QPL to confirm which versions are qualified.

Suitable for use within closet spaces when installed per NEC 410.16 (A)(1) and 410.16(C)(3)(5) spacing requirements.

WARRANTY:

5-year limited warranty. This is the only warranty provided and no other statements in this specification sheet create any warranty of any kind. All other express and implied warranties are disclaimed. Complete warranty terms located at: www.acuitybrands.com/support/warranty/terms-and-conditions

Note: Actual performance may differ as a result of end-user environment and application. All values are design or typical values, measured under laboratory conditions at 25 °C. Specifications subject to change without notice.

Dimensions

All dimensions are inches (centimeters) unless otherwise indicated.

2FT ASSEMBLY

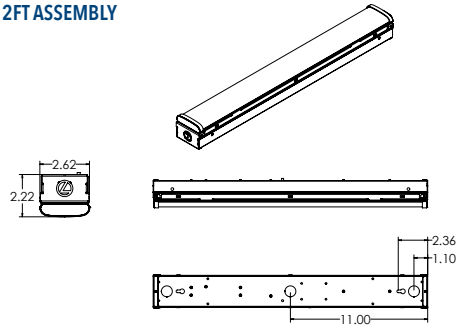

4FT ASSEMBLY

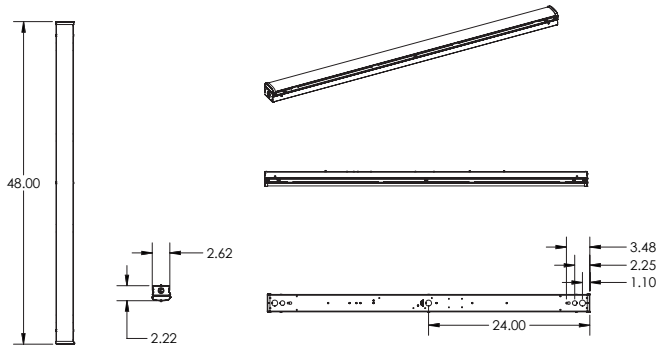
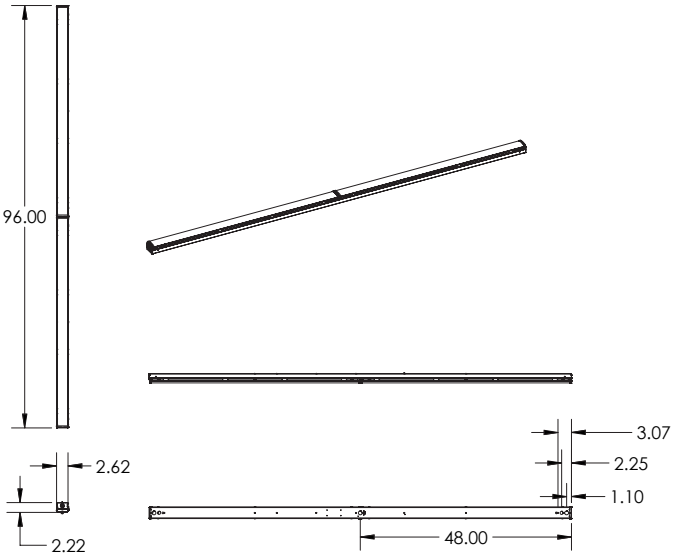
8FT ASSEMBLY