DLE4

4" Edge Lit LED Downlight

The DLE Edge Lit LED Downlight Series offers an attractive visual aesthetic with both round and square apertures. The edge lit technology uses a reflective light guide panel that disperses light through a diffused lens, making it an effective and economical solution. The ultra-thin fixture depth and off-board driver allow for a more flexible installation and increased lifetime with improved thermal management. Eliminating the need for a J-box or recessed housing, the DLE fixture uses a plenum-rated cable connector to link the downlight module to the remote driver box and then pops into place with its adjustable, spring loaded retention tabs for a secure fit. Adding light in tight spaces such as hallways, bathrooms, basements, entry ways, porches, stairways, work areas, utility closets and corridors just got easier.

Aperture: Available in square and round
CCT: 2700K, 3000K, 4000K or 5000K
High Performing LEDs: Greater than 90 CRI; R9 greater than 50
Reported Lifetime: 60,000 Hours
Power Draw: 10.8W, 11.2W
Input Voltage: 120V
Dimmable: To less than 10% with most standard TRIAC dimmers
Operating temperature: 0° to 120°F (-18°C to 49°C)
Installation: Adjustable, spring loaded retention tabs allow for easy installation with no need for a recessed housing

5 YEAR WARRANTY
WET LOCATION RATED
c UL us LISTED
IC RATED

DLE4 | 4" Edge Lit LED Downlight

Photometric Data

DLE4 2700K RD

Input Voltage (VAC)	120V
System Level Power (W)	10.8
Delivered Lumens (Lm)	461
System Efficacy (Lm/W)	42.7
Correlated Color Temp (K)	2712
Color Rendering Index (CRI)	96
Beam Angle	112°
Spacing Criteria	1.26

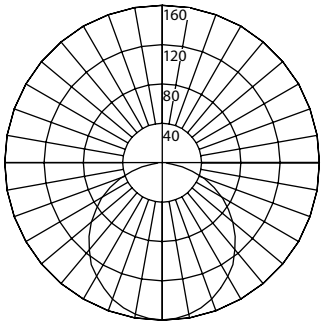

Intensity Summary (Candle Power)

Angle	Mean CP
0	160
5	159
15	153
25	141
35	148
45	106
55	82
65	59
75	32
85	10
90	4

CCT Data Multiplier

DLE4-10-120-3K-RD	1.020
DLE4-10-120-4K-RD	1.042
DLE4-10-120-5K-RD	1.076

Cone of Light Tabulation

Mounted height (Feet)	Footcandles Beam Center	Diameter (Feet)
4	10.0	5.0
6	4.4	7.7
8	2.5	9.7
10	1.6	12.2
12	1.1	15.0
14	0.8	18.0
16	0.6	22.0

Zonal Lumen Summary

Zone	Lumens	% of Luminaire
0-30	123	26.7%
0-40	202	43.7%
0-60	357	77.3%
0-90	461	100.0%
90-180	0	0.0%
0-180	461	100.0%

DLE4 2700K SQ

Input Voltage (VAC)	120V
System Level Power (W)	11.2
Delivered Lumens (Lm)	579
System Efficacy (Lm/W)	51.7
Correlated Color Temp (K)	2718
Color Rendering Index (CRI)	93
Beam Angle	112°
Spacing Criteria	1.26

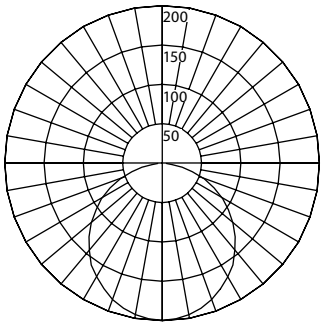

Intensity Summary (Candle Power)

Angle	Mean CP
0	200
5	199
15	192
25	179
35	158
45	132
55	103
65	75
75	41
85	11
90	4

CCT Data Multiplier

DLE4-10-120-3K-SQ	1.021
DLE4-10-120-4K-SQ	1.042
DLE4-10-120-5K-SQ	1.076

Cone of Light Tabulation

Mounted height (Feet)	Footcandles Beam Center	Diameter (Feet)
4	12.5	5.1
6	5.6	7.6
8	3.1	8.3
10	2.0	13.0
12	1.4	15.0
14	1.0	17.8
16	0.8	20.2

Zonal Lumen Summary

Zone	Lumens	% of Luminaire
0-30	155	26.8%
0-40	254	43.8%
0-60	449	77.5%
0-90	579	100.0%
90-180	0	0.0%
0-180	579	100.0%

Fixture tested per LM-79-08. Photometric data is of the performance of a representative fixture. Results may vary in the field.

Performance Data

Model Number	Lumens	Watts	Lumens/Watt
DLE4-10-120-2K-RD	461	10.8	42.7
DLE4-10-120-3K-RD	470	10.8	43.5
DLE4-10-120-4K-RD	480	10.8	44.5
DLE4-10-120-5K-RD	496	10.8	45.9
DLE4-10-120-2K-SQ	579	11.2	51.7
DLE4-10-120-3K-SQ	591	11.2	52.8
DLE4-10-120-4K-SQ	603	11.2	53.9
DLE4-10-120-5K-SQ	623	11.2	55.6

Recommended Dimmers*

Lutron Toggler TGCL-153P

Lutron Skylark SCL-153P

Lutron DIVA DVCL-153P

Lutron DIVA DVELV-300P

Lutron DIVA DVELV-303P

**Not a complete list. Check compatibility before installation.*

DLE4 | 4" Edge Lit LED Downlight

Ordering Information

Series	Version	Voltage	CCT's	Trim Shape	Trim Color
DLE4	**10** (Version 1)	**120** (120V)	**2K** (2700 K)	**RD** (Round)	**WH** (White)
			3K (3000 K)	**SQ** (Square)	
			4K (4000 K)		
			5K (5000 K)		

Accessories

Accessories sold separately

Round Mounting Template	DLE4-RD-TEMPLATE
Square Mounting Template	DLE4-SQ-TEMPLATE
24" Extension Cable	DLE-EXTCABLE-24

Dimensions

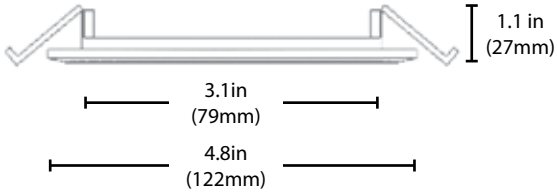

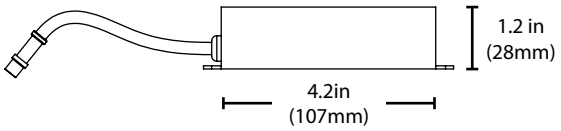

Meet The Outdoor Family | nicoroutdoor.com

DLE4

4" Edge Lit LED Downlight

The DLE Edge Lit LED Downlight Series offers an attractive visual aesthetic with both round and square apertures. The edge lit technology uses a reflective light guide panel that disperses light through a diffused lens, making it an effective and economical solution. The ultra-thin fixture depth and off-board driver allow for a more flexible installation and increased lifetime with improved thermal management. Eliminating the need for a J-box or recessed housing, the DLE fixture uses a plenum-rated cable connector to link the downlight module to the remote driver box and then pops into place with its adjustable, spring loaded retention tabs for a secure fit. Adding light in tight spaces such as hallways, bathrooms, basements, entry ways, porches, stairways, work areas, utility closets and corridors just got easier.

Aperture: Available in square and round
CCT: 2700K, 3000K, 4000K or 5000K
High Performing LEDs: Greater than 90 CRI; R9 greater than 50
Reported Lifetime: 60,000 Hours
Power Draw: 10.8W, 11.2W
Input Voltage: 120V
Dimmable: To less than 10% with most standard TRIAC dimmers
Operating temperature: 0° to 120°F (-18°C to 49°C)
Installation: Adjustable, spring loaded retention tabs allow for easy installation with no need for a recessed housing

5 YEAR WARRANTY
WET LOCATION RATED
c UL us LISTED
IC RATED

DLE4 | 4" Edge Lit LED Downlight

Photometric Data

DLE4 2700K RD

Input Voltage (VAC)	120V
System Level Power (W)	10.8
Delivered Lumens (Lm)	461
System Efficacy (Lm/W)	42.7
Correlated Color Temp (K)	2712
Color Rendering Index (CRI)	96
Beam Angle	112°
Spacing Criteria	1.26

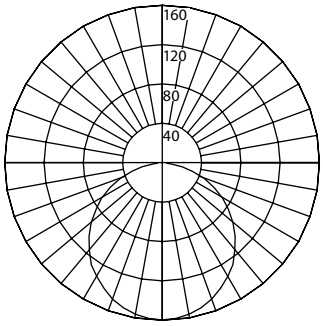

Intensity Summary (Candle Power)

Angle	Mean CP
0	160
5	159
15	153
25	141
35	148
45	106
55	82
65	59
75	32
85	10
90	4

CCT Data Multiplier

DLE4-10-120-3K-RD	1.020
DLE4-10-120-4K-RD	1.042
DLE4-10-120-5K-RD	1.076

Cone of Light Tabulation

Mounted height (Feet)	Footcandles Beam Center	Diameter (Feet)
4	10.0	5.0
6	4.4	7.7
8	2.5	9.7
10	1.6	12.2
12	1.1	15.0
14	0.8	18.0
16	0.6	22.0

Zonal Lumen Summary

Zone	Lumens	% of Luminaire
0-30	123	26.7%
0-40	202	43.7%
0-60	357	77.3%
0-90	461	100.0%
90-180	0	0.0%
0-180	461	100.0%

DLE4 2700K SQ

Input Voltage (VAC)	120V
System Level Power (W)	11.2
Delivered Lumens (Lm)	579
System Efficacy (Lm/W)	51.7
Correlated Color Temp (K)	2718
Color Rendering Index (CRI)	93
Beam Angle	112°
Spacing Criteria	1.26

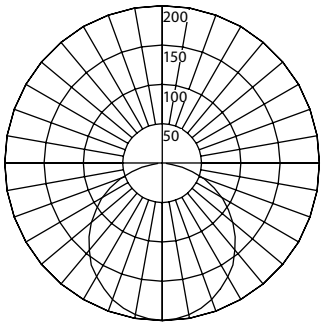

Intensity Summary (Candle Power)

Angle	Mean CP
0	200
5	199
15	192
25	179
35	158
45	132
55	103
65	75
75	41
85	11
90	4

CCT Data Multiplier

DLE4-10-120-3K-SQ	1.021
DLE4-10-120-4K-SQ	1.042
DLE4-10-120-5K-SQ	1.076

Cone of Light Tabulation

Mounted height (Feet)	Footcandles Beam Center	Diameter (Feet)
4	12.5	5.1
6	5.6	7.6
8	3.1	8.3
10	2.0	13.0
12	1.4	15.0
14	1.0	17.8
16	0.8	20.2

Zonal Lumen Summary

Zone	Lumens	% of Luminaire
0-30	155	26.8%
0-40	254	43.8%
0-60	449	77.5%
0-90	579	100.0%
90-180	0	0.0%
0-180	579	100.0%

Fixture tested per LM-79-08. Photometric data is of the performance of a representative fixture. Results may vary in the field.

Performance Data

Model Number	Lumens	Watts	Lumens/Watt
DLE4-10-120-2K-RD	461	10.8	42.7
DLE4-10-120-3K-RD	470	10.8	43.5
DLE4-10-120-4K-RD	480	10.8	44.5
DLE4-10-120-5K-RD	496	10.8	45.9
DLE4-10-120-2K-SQ	579	11.2	51.7
DLE4-10-120-3K-SQ	591	11.2	52.8
DLE4-10-120-4K-SQ	603	11.2	53.9
DLE4-10-120-5K-SQ	623	11.2	55.6

Recommended Dimmers*

Lutron Toggler TGCL-153P

Lutron Skylark SCL-153P

Lutron DIVA DVCL-153P

Lutron DIVA DVELV-300P

Lutron DIVA DVELV-303P

**Not a complete list. Check compatibility before installation.*

DLE4 | 4" Edge Lit LED Downlight

Ordering Information

Series	Version	Voltage	CCT's	Trim Shape	Trim Color
DLE4	**10** (Version 1)	**120** (120V)	**2K** (2700 K)	**RD** (Round)	**WH** (White)
			3K (3000 K)	**SQ** (Square)	
			4K (4000 K)		
			5K (5000 K)		

Accessories

Accessories sold separately

Round Mounting Template	DLE4-RD-TEMPLATE
Square Mounting Template	DLE4-SQ-TEMPLATE
24" Extension Cable	DLE-EXTCABLE-24

Dimensions

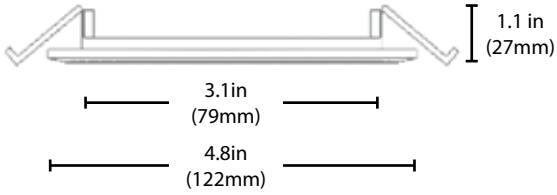

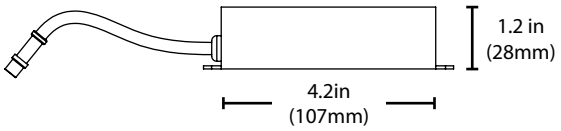

Meet The Outdoor Family | nicoroutdoor.com