Miniature Circuit Breakers

Selection Guide 2

QUICKLAG® Industrial Circuit Breakers

Circuit Breakers, Plug-on Types HQP, QPHW, QHPX, QHPW 5
Ground Fault Circuit Breakers, Plug-on Types QPGF, QPHGF 6
Ground Fault Equipment Protectors, Plug-on Types QPGFEP, QPHGFEP 6
Circuit Breakers, Bolt-on Types BA, QBHW, HBAX, HBAW 7
Ground Fault Circuit Breakers, Bolt-on Types QBGF, QBHGF 8
Ground Fault Equipment Protectors, Bolt-on Types QBGFEP, QBHGFEP 8
Circuit Breakers, Cable-in/Cable-out
1-Inch per Pole Types QC, QCHW, QHCX, QHCW . . . 9
1/2-Inch per Pole Types QCR, QCF, QCRH, QCFH . . . 10
Ground Fault Circuit Breakers, Cable-in/Cable-out Types QCGF, QCHGF 13
Ground Fault Equipment Protectors, Cable-in/Cable-out Types QPGFEP, QCHGFEP 13
Solenoid-operated, Remote-controlled Types GHBS, GBHS 14
International Rated Circuit Breakers 16
Special Application Breakers 17
Accessories 18
Factory Modifications, Factory Installed Terminals . . . 19

Supplementary Protectors

Type SPCL Current Limiting 20
Type SPHM Hydraulic Magnetic 23

Circuit Breaker Electronic Catalog

Navigation Chart of Attached CD-ROM 192

- Product Guide
- Selection Data
- Time Current Curves
- Dimensions

Website: www.cutlerhammer.eaton.com

Copyright Cutler-Hammer Inc., 1999.
All Rights Reserved.

Molded Case Circuit Breakers

Selection Guide 3

Series C Circuit Breakers

G-Frame 25
F-Frame 31
J-Frame 37
K-Frame 43
L-Frame 55
M-Frame 67
N-Frame 75
R-Frame 89

Specific Application Circuit Breakers

Motor Circuit Protectors 107
Earth Leakage 113
Current Limiting
Non-fused 115
Fused 117
Engine Generator 129
Direct Current 133
Mining Service . . . . . **See CD-ROM SA.74A.01.T.E**
Navy . . . . . **See CD-ROM SA.74A.01.T.E**

Add-on Ground Fault Protection 135

Internal Accessories

Alarm Switch 139
Auxiliary Switch 142
Auxiliary and Alarm Switch Combination 145
Shunt Trip 147
Low Energy Shunt Trip 152
Undervoltage Release Mechanism 153
Terminal Block 160
Communication Kits 160

External Accessories

Termination Hardware 161
Mounting Hardware 163
Locking Devices 168
Interlocking Devices 170
Electric Operators 172
Plug-in Adapters 174
Rear Connecting Studs 175
Panelboard Connecting Straps 177
Handle Mechanisms 178

Circuit Breaker Enclosures 187

Standards 191

Circuit Breaker Type	Circuit Breaker Type Code	Cont. Ampere Rating At 40°C	Number of Poles	Volts Ac	Volts Dc	Federal Spec. W-C-375b	Interrupting Ratings rms Symmetrical Amperes: Ac Ratings Volts 120	Ac Ratings Volts 120/240	Ac Ratings Volts 240	Dc② 24-48	Dc② 62.5	Dc② 80	Page Number
Quicklag Industrial Circuit Breakers①													
Plug-in, Bolt-on, Cable-in/Cable-out													
HQP	P	10-70	1	120/240	24, 48, 62.5	10a, 11a, 12a	–	10,000	–	5,000	③	–	5
HQP		10-125	2	120/240	24, 48, 80	10a, 12a	–	10,000	–	5,000	5,000	5,000	5
HQP		10-100	2, 3	240	–	10b, 11b, 12b	–	–	10,000	–	–	–	5
QPHW	P	15-70	1	120/240	24, 48, 62.5	14a	–	22,000	–	5,000	③	–	5
QPHW		15-125	2	120/240	24, 48, 80	14a	–	22,000	–	5,000	5,000	5,000	5
QPHW		15-100	2, 3	240	–	14b	–	–	22,000	–	–	–	5
QHPX	P	15-70	1	120/240	24, 48, 62.5	–	–	42,000	–	5,000	③	–	5
QHPX		15-100	2	120/240	24, 48, 80	–	–	42,000	–	5,000	5,000	5,000	5
QHPX		15-100	3	240	–	–	–	–	42,000	–	–	–	5
QHPW	P	15-30	1	120/240	24, 48, 62.5	15a	–	65,000	–	5,000	③	–	5
QHPW		15-30	2	120/240	24, 48, 80	15a	–	65,000	–	5,000	5,000	5,000	5
QHPW		15-20	3	240	–	15b	–	–	65,000	–	–	–	5
QPGF	P, GF	15-40	1	120	–	10a, 11a, 12a	10,000	–	–	–	–	–	6
QPGF		15-50	2	120/240	–	10a, 11a, 12a	–	10,000	–	–	–	–	6
QPHGF	P, GF	15-30	1	120	–	10a, 11a, 12a	22,000	–	–	–	–	–	6
QPHGF		15-50	2	120/240	–	10a, 11a, 12a	–	22,000	–	–	–	–	6
QPGFEP	P, GFEP	15-40	1	120	–	–	10,000	–	–	–	–	–	6
QPGFEP		15-50	2	120/240	–	–	–	10,000	–	–	–	–	6
QPHGFEP	P, GFEP	15-30	1	120	–	–	22,000	–	–	–	–	–	6
QPHGFEP		15-30	2	120/240	–	–	22,000	22,000	–	–	–	–	6
BAB	B	10-70	1	120/240	24, 48, 62.5	10a, 11a, 12a	–	10,000	–	5,000	③	–	7
BAB		10-125	2	120/240	24, 48, 80	10a, 12a	–	10,000	–	5,000	5,000	5,000	7
BAB		10-100	2, 3	240	–	10b, 11b, 12b	–	–	10,000	–	–	–	7
QBHW	B	15-70	1	120/240	24, 48, 62.5	14a	–	22,000	–	5,000	③	–	7
QBHW		15-125	2	120/240	24, 48, 80	14a	–	22,000	–	5,000	5,000	5,000	7
QBHW		15-100	2, 3	240	–	14b	–	–	22,000	–	–	–	7
HBAX	B	15-70	1	120/240	24, 48, 62.5	–	–	42,000	–	5,000	③	–	7
HBAX		15-100	2	120/240	24, 48, 80	–	–	42,000	–	5,000	5,000	5,000	7
HBAX		15-100	3	240	–	–	–	–	42,000	–	–	–	7
HBAW	B	15-30	1	120/240	24, 48, 62.5	15a	–	65,000	–	5,000	③	–	7
HBAW		15-30	2	120/240	24, 48, 80	15a	–	65,000	–	5,000	5,000	5,000	7
HBAW		15-20	3	240	–	15b	–	–	65,000	–	–	–	7
QBGF	B, GF	15-40	1	120	–	10a, 11a, 12a	10,000	–	–	–	–	–	8
QBGF		15-50	2	120/240	–	10a, 11a, 12a	–	10,000	–	–	–	–	8
QBHGF	B, GF	15-30	1	120	–	10a, 11a, 12a	22,000	–	–	–	–	–	8
QBHGF		15-30	2	120/240	–	10a, 11a, 12a	–	22,000	–	–	–	–	8
QBGFEP	B, GFEP	15-40	1	120	–	–	10,000	–	–	–	–	–	8
QBGFEP		15-50	2	120/240	–	–	–	10,000	–	–	–	–	8
QBHGFEP	B, GFEP	15-30	1	120	–	–	22,000	–	–	–	–	–	8
QBHGFEP		15-30	2	120/240	–	–	22,000	22,000	–	–	–	–	8
QC	C	10-70	1	120/240	24, 48, 62.5	10a, 11a, 12a	–	10,000	–	5,000	③	–	9
QC		10-100	2	120/240	24, 48, 80	10a, 12a	–	10,000	–	5,000	5,000	5,000	9
QC		10-100	2, 3, 4	240	–	10b, 11b, 12b	–	–	10,000	–	–	–	9
QCF	C	10-60	1, 2	120/240	24, 48, 62.5	–	10,000	10,000	–	3,000	③	–	10
QCF		15-20	1, 2	120/240	24, 48, 62.5	–	22,000	–	–	3,000	3,000	–	10
QCF		15-30	2, 3	240	24, 48, 62.5	–	–	10,000	–	3,000	3,000	–	10
QCR		10-60	1, 2	120/240	24, 48, 62.5	–	10,000	10,000	–	3,000	2,000	–	10
QCR		15-20	1, 2	120/240	24, 48, 62.5	–	22,000	–	–	3,000	3,000	–	10
QCR		15-30	2, 3	240	24, 48, 62.5	–	–	10,000	–	3,000	3,000	–	10
QCHW	C	15-70	1	120/240	24, 48, 62.5	14a	–	22,000	–	5,000	③	–	9
QCHW		15-100	2	120/240	24, 48, 80	14a	–	22,000	–	5,000	5,000	5,000	9
QCHW		15-100	2, 3	240	–	14b	–	–	22,000	–	–	–	9
QHCX	C	15-70	1	120/240	24, 48, 62.5	–	–	42,000	–	5,000	③	–	9
QHCX		15-100	2	120/240	24, 48, 80	–	–	42,000	–	5,000	5,000	5,000	9
QHCX		15-100	3	240	–	–	–	–	42,000	–	–	–	9
QHCW	C	15-30	1	120/240	24, 48, 62.5	15a	–	65,000	–	5,000	③	–	9
QHCW		15-30	2	120/240	24, 48, 80	15a	–	65,000	–	5,000	5,000	5,000	9
QHCW		15-20	3	240	–	15b	–	–	65,000	–	–	–	9
QCGF	C, GF	15-40	1	120	–	–	10,000	–	–	–	–	–	13
QCGF		15-50	2	120/240	–	–	–	10,000	–	–	–	–	13
QCHGF	C, GF	15-30	1	120	–	–	22,000	–	–	–	–	–	13
QCHGF		15-30	2	120/240	–	–	–	22,000	–	–	–	–	13
QCGFEP	C, GFEP	15-40	1	120	–	–	10,000	–	–	–	–	–	13
QCGFEP		15-50	2	120/240	–	–	–	10,000	–	–	–	–	13
QCHGFEP	C, GFEP	15-30	1	120	–	–	22,000	–	–	–	–	–	13
QCHGFEP		15-30	2	120/240	–	–	–	22,000	–	–	–	–	13

Circuit Breaker Type Codes: P Plug-in; B Bolt-on; C Cable-in/Cable-out; GF Ground Fault, 5 ma; GFEP Ground Fault, 30 ma.

For Types SPCL and SPHM Supplementary Protectors, see pages 20 and 23.
For Types GHBS and GBHS Solenoid-operated, Remote-controlled Circuit Breakers, see page 14.

① QUICKLAG circuit breakers are suitable for application in relative humidity 0-95% non-condensating.

② Two-pole dc interrupting ratings based on 2 poles connected in series.

③ 62.5 Vac interrupting rating is 3800 AIC 10-50 amperes and 2500 AIC 55-100 amperes continuous.

Circuit Breaker Type	Cont. Amp Rating At 40°C	No. Poles	Volts Ac	Volts Dc	Type of Trip①	Federal Spec. W-C-375b	UL Listed Interrupting Ratings rms Symmetrical Amperes: Ac Ratings Volts 120	120/240	240	277	480	600	Dc② 125	250	125/250	Page Number
Series C® Industrial Circuit Breakers																
G-Frame																
GB	15-100	1	120	125	N.I.T.	11a	65,000	–	–	–	–	–	14,000	–	–	27
GB	15-100	2, 3	240	125/250		10b, 11b, 12b, 14b, 15b	–	–	65,000	–	–	–	–	–	14,000	27
GHB	15-100	1	120	125	N.I.T.	11a	65,000	–	–	–	–	–	14,000	–	–	27
GHB	15-100	2, 3	240	125/250		10b, 11b,	–	–	65,000	–	–	–	–	–	14,000	27
GHB	15-100	1	277	125		12b, 14b,	–	–	–	14,000	–	–	14,000	–	–	27
GHB	15-100	2, 3	277/480	125/250		15b 12c, 13a 13b	–	–	–	14,000	14,000	–	–	–	14,000	27
GC	15-100	1	120	125	N.I.T.	11a	65,000	–	–	–	–	–	14,000	–	–	28
GC	15-100	2, 3	240	125/250		10b, 11b, 12b, 14b, 15b	–	–	65,000	–	–	–	–	–	14,000	28
GHC	15-100	1	120	125	N.I.T.	12c, 13a	65,000	–	–	–	–	–	14,000	–	–	28
GHC	15-100	2, 3	240	125/250		13b	–	–	65,000	–	–	–	–	–	14,000	28
GHC	15-100	1	277	125		12c, 13a	–	–	–	14,000	–	–	14,000	–	–	28
GHC	15-100	2, 3	277/480	125/250		13b	–	–	–	14,000	14,000	–	–	–	14,000	28
F-Frame																
GD	15-100	3	480	250	N.I.T.	13b	–	–	65,000	–	22,000	–	–	10,000	–	26
ED	100-255	2, 3	240	125	N.I.T.	12b	–	–	65,000	–	–	–	10,000	–	–	32
EDH	100-255	2, 3	240	125		14b	–	–	100,000	–	–	–	10,000	–	–	32
EDC	100-255	2, 3	240	125		1	–	–	200,000	–	–	–	10,000	–	–	32
EHD	15-100	1	277	125	N.I.T.	13a	–	–	–	14,000	–	–	10,000	–	–	32
EHD	15-100	2, 3	480	250		13b	–	–	18,000	–	14,000	–	–	10,000	–	32
FDB	15-150	2, 3	600	250	N.I.T.	18a	–	–	18,000	–	14,000	14,000	–	10,000	–	32
FDB	15-150	4	600	250		③	–	–	18,000	–	14,000	14,000	–	10,000	–	32
FD	15-150	1	277	125	N.I.T.	13a	–	–	–	25,000	–	–	10,000	–	–	32
FD	15-150	2, 3	600	250		22a	–	–	65,000	–	25,000	18,000	–	10,000	–	32
FD	15-150	4	600	250		③	–	–	65,000	–	25,000	18,000	–	10,000	–	32
HFD	15-150	1	277	125	N.I.T.	13a	–	–	–	65,000	–	–	10,000	–	–	33
HFD	15-150	2,3	600	250		22a	–	–	100,000	–	65,000	25,000	–	20,000	–	33
HFD	15-150	4	600	250		③	–	–	100,000	–	65,000	25,000	–	20,000	–	33
FDC	15-150	2, 3	600	250	N.I.T.	24a	–	–	200,000	–	100,000	35,000	–	20,000	–	33
FDC	15-150	4	600	250		③	–	–	200,000	–	100,000	35,000	–	20,000	–	33
J-Frame																
JDB	70-250	2, 3	600	250	N.I.T.	22a	–	–	65,000	–	25,000	18,000	–	10,000	–	39
JD	70-250	2, 3, 4	600	250	I.T	22a	–	–	65,000	–	25,000	18,000	–	10,000	–	38
HJD	70-250	2, 3, 4	600	250	I.T	22a	–	–	100,000	–	65,000	25,000	–	22,000	–	38
JDC	70-250	2, 3, 4	600	250	I.T	22a	–	–	200,000	–	100,000	35,000	–	22,000	–	38
K-Frame																
DK	250-400	2, 3	240	250	N.I.T.	14b	–	–	65,000	–	–	–	–	10,000	–	47
KDB	100-400	2, 3	600	250	N.I.T.	23a	–	–	65,000	–	35,000	25,000	–	10,000	–	47
KD	100-400	2, 3, 4	600	250	I.T	23a	–	–	65,000	–	35,000	25,000	–	10,000	–	45, 46, 49
CKD	100-400	2, 3, 4	600	250	I.T	23a	–	–	65,000	–	35,000	25,000	–	10,000	–	48, 50
HKD	100-400	2, 3, 4	600	250	I.T	23a	–	–	100,000	–	65,000	35,000	–	22,000	–	45, 46, 49
CHKD	100-400	2, 3, 4	600	250	I.T	23a	–	–	100,000	–	65,000	35,000	–	22,000	–	48, 50
KDC	100-400	2, 3, 4	600	250	I.T	23a	–	–	200,000	–	100,000	50,000	–	22,000	–	45, 46, 49
L-Frame																
LDB	300-600	2, 3	600	250	N.I.T.	23a	–	–	65,000	–	35,000	25,000	–	22,000	–	58
LD	300-600	2, 3, 4	600	250	I.T	23a	–	–	65,000	–	35,000	25,000	–	22,000	–	57, 59
CLD	300-600	2, 3, 4	600	250	I.T	23a	–	–	65,000	–	35,000	25,000	–	22,000	–	58, 61
HLD	300-600	2, 3, 4	600	250	I.T	23a	–	–	100,000	–	65,000	35,000	–	25,000	–	57, 59
CHLD	300-600	2, 3, 4	600	250	I.T	23a	–	–	100,000	–	65,000	35,000	–	25,000	–	61
LDC	300-600	2, 3, 4	600	250	I.T	23a	–	–	200,000	–	100,000	50,000	–	25,000	–	57, 60
CLDC	300-600	2, 3, 4	600	250	I.T	23a	–	–	200,000	–	100,000	50,000	–	25,000	–	62

① N.I.T. is non-interchangeable trip unit and I.T. is interchangeable trip unit.

② Two-pole circuit breaker, or two poles of three-pole circuit breaker at 250 Vdc.

③ Not defined in W-C-375b.

Selection Guide, *Continued*

Circuit Breaker Type	Cont. Amp Rating At 40°C	No. Poles	Volts Ac	Volts Dc	Type of Trip①	Federal Spec. W-C-375b	UL Listed Interrupting Ratings rms Symmetrical Amperes: Ac Ratings Volts 120	120/240	240	277	480	600	Dc② 125	250	125/250	Page Number
Series C® Industrial Circuit Breakers																
M-Frame																
MDL	300-800	2, 3	600	250	I.T.	23a	–	–	65,000	–	50,000	25,000	–	22,000	–	69, 70
CMDL	300-800	2, 3	600	250	I.T.	23a	–	–	65,000	–	50,000	25,000	–	22,000	–	70
HMDL	300-800	2, 3	600	250	I.T.	23a	–	–	100,000	–	65,000	35,000	–	25,000	–	69, 70
CHMDL	300-800	2, 3	600	250	I.T.	23a	–	–	100,000	–	65,000	35,000	–	25,000	–	70
N-Frame																
ND	600-1200	3, 4	600	–	N.I.T.	23A	–	–	65,000	–	50,000	25,000	–	–	–	77, 83
CND	600-1200	3, 4	600	–	N.I.T.	23A	–	–	65,000	–	50,000	25,000	–	–	–	80, 84
HND	600-1200	3, 4	600	–	N.I.T.	23A	–	–	100,000	–	65,000	35,000	–	–	–	78, 83
CHND	600-1200	3, 4	600	–	N.I.T.	23A	–	–	100,000	–	65,000	35,000	–	–	–	81, 84
NDC	600-1200	3, 4	600	–	N.I.T.	23A	–	–	200,000	–	100,000	50,000	–	–	–	79, 83
CNDC	600-1200	3, 4	600	–	N.I.T.	23A	–	–	200,000	–	100,000	50,000	–	–	–	82, 84
R-Frame																
RD 1600	800-1600	3, 4	600	–	N.I.T.	24a	–	–	125,000	–	65,000	50,000	–	–	–	91
CRD 1600	800-1600	3, 4	600	–	N.I.T.	24a	–	–	125,000	–	65,000	50,000	–	–	–	93
RD 2000	1000-2000	3, 4	600	–	N.I.T.	24a	–	–	125,000	–	65,000	50,000	–	–	–	91
RD 2500	1000-2500	3, 4	600	–	N.I.T.	24a	–	–	200,000	–	65,000	50,000	–	–	–	91
CRD 2000	1000-2000	3, 4	600	–	N.I.T.	24a	–	–	125,000	–	65,000	50,000	–	–	–	93
RDC 1600	800-1600	3, 4	600	–	N.I.T.	25a	–	–	200,000	–	100,000	65,000	–	–	–	92
CRDC 1600	800-1600	3, 4	600	–	N.I.T.	25a	–	–	200,000	–	100,000	65,000	–	–	–	93
RDC 2000	1000-2000	3, 4	600	–	N.I.T.	25a	–	–	200,000	–	100,000	65,000	–	–	–	92
RDC 2500	1000-2500	3, 4	600	–	N.I.T.	25a	–	–	200,000	–	100,000	65,000	–	–	–	92
CRDC 2000	1000-2000	3, 4	600	–	N.I.T.	25a	–	–	200,000	–	100,000	65,000	–	–	–	93
Series C® HMCP Motor Circuit Protectors																107
Current Limit R Current Limiting Circuit Breakers – Non-Fused Type																
FCL	15-100	2, 3	480	–	N.I.T.	–	–	–	200,000	–	150,000	–	–	–	–	115
LCL	125-400	2, 3	600	–	N.I.T.	–	–	–	200,000	–	200,000	100,000	–	–	–	116
Tri-Pac Current Limiting Circuit Breakers – Fused Type																
FB	15-100	2, 3	600	250	N.I.T.	16a, 16b, 17a, 26a	–	–	200,000	–	200,000	200,000	–	–	100,000	117
LA	70-400	2, 3	600	250	I.T.	16a, 16b, 17a, 26a	–	–	200,000	–	200,000	200,000	–	–	100,000	118
NB	300-800	2, 3	600	250	I.T.	16b, 17a, 26a	–	–	200,000	–	200,000	200,000	–	–	100,000	119
PB	600-1600	2, 3	600	250	I.T.	17a, 26a	–	–	200,000	–	200,000	200,000	–	–	100,000	120

① N.I.T. is non-interchangeable trip unit and I.T. is interchangeable trip unit.

② Two-pole circuit breaker, or two poles of three-pole circuit breaker at 250 Vdc.

Description

Built and Listed to UL 489

QUICKLAG Circuit Breakers Plug-on Type

Type HQP: 10-150 Amperes, 10,000 AIC
Type QPHW: 15-125 Amperes, 22,000 AIC
Type QHPX: 15-100 Amperes, 42,000 AIC
Type QHPW: 15-30 Amperes, 65,000 AIC

QUICKLAG Type HQP 1-Pole

QUICKLAG Type HQP 2-Pole

QUICKLAG Type HQP 3-Pole

① All products UL and CSA listed.
② All products 15-100A are HACR rated.
③ Switching duty rated for 120 Vac fluorescent light applications.
④ For special low-magnetic breaker order HQP1015L1 or HQP1020L1

Breaker Catalog Numbers

Continuous Ampere Rating at 40°C	Catalog Number			
	1-Pole①②	2-Pole①②		3-Pole①②
	120/240 Vac	120/240 Vac	240 Vac	240 Vac
QUICKLAG Type: HQP 10,000 Ampere I.C. Thermal-Magnetic Breakers				
10	HQP1010	HQP2010	HQP2010H	HQP3010H
15	HQP1015③④	HQP2015	HQP2015H	HQP3015H
20	HQP1020③④	HQP2020	HQP2020H	HQP3020H
25	HQP1025	HQP2025	HQP2025H	HQP3025H
30	HQP1030	HQP2030	HQP2030H	HQP3030H
35	HQP1035	HQP2035	HQP2035H	HQP3035H
40	HQP1040	HQP2040	HQP2040H	HQP3040H
45	HQP1045	HQP2045	HQP2045H	HQP3045H
50	HQP1050	HQP2050	HQP2050H	HQP3050H
55	HQP1055	HQP2055	HQP2055H	HQP3055H
60	HQP1060	HQP2060	HQP2060H	HQP3060H
70	HQP1070	HQP2070	HQP2070H	HQP3070H
80	–	HQP2080	HQP2080H	HQP3080H
90	–	HQP2090	HQP2090H	HQP3090H
100	HQP1100	HQP2100	HQP2100H	HQP3100H
110	–	HQP2110	–	–
125	–	HQP2125	–	–
150	–	HQP2150	–	–
QUICKLAG Type: QPHW 22,000 Ampere I.C. Thermal-Magnetic Breakers				
15	QPHW1015③	QPHW2015	QPHW2015H	QPHW3015H
20	QPHW1020③	QPHW2020	QPHW2020H	QPHW3020H
25	QPHW1025	QPHW2025	QPHW2025H	QPHW3025H
30	QPHW1030	QPHW2030	QPHW2030H	QPHW3030H
35	QPHW1035	QPHW2035	QPHW2035H	QPHW3035H
40	QPHW1040	QPHW2040	QPHW2040H	QPHW3040H
45	QPHW1045	QPHW2045	QPHW2045H	QPHW3045H
50	QPHW1050	QPHW2050	QPHW2050H	QPHW3050H
55	QPHW1055	QPHW2055	QPHW2055H	QPHW3055H
60	QPHW1060	QPHW2060	QPHW2060H	QPHW3060H
70	QPHW1070	QPHW2070	QPHW2070H	QPHW3070H
80	–	QPHW2080	QPHW2080H	QPHW3080H
90	–	QPHW2090	QPHW2090H	QPHW3090H
100	–	QPHW2100	QPHW2100H	QPHW3100H
110	–	QPHW2110	–	–
125	–	QPHW2125	–	–
QUICKLAG Type: QHPX 42,000 Ampere I.C. Thermal-Magnetic Breakers				
15	QHPX1015③	QHPX2015	–	QHPX3015H
20	QHPX1020③	QHPX2020	–	QHPX3020H
25	QHPX1025	QHPX2025	–	QHPX3025H
30	QHPX1030	QHPX2030	–	QHPX3030H
35	QHPX1035	QHPX2035	–	QHPX3035H
40	QHPX1040	QHPX2040	–	QHPX3040H
45	QHPX1045	QHPX2045	–	QHPX3045H
50	QHPX1050	QHPX2050	–	QHPX3050H
55	QHPX1055	QHPX2055	–	QHPX3055H
60	QHPX1060	QHPX2060	–	QHPX3060H
70	QHPX1070	QHPX2070	–	QHPX3070H
80	–	QHPX2080	–	QHPX3080H
90	–	QHPX2090	–	QHPX3090H
100	–	QHPX2100	–	QHPX3100H
QUICKLAG Type: QHPW 65,000 Ampere I.C. Thermal-Magnetic Breakers				
15	QHPW1015③	QHPW2015	–	QHPW3015H
20	QHPW1020③	QHPW2020	–	QHPW3020H
25	QHPW1025	QHPW2025	–	–
30	QHPW1030	QHPW2030	–	–

Shipping Data

Poles	Carton Quantity	Approximate Weight Lbs. (Kgs)	Dimensions Inches (mm)
1	24	9.000 (4.09)	12.500 (317.50) x 7.500 (190.50) x 5.000 (127.00)
2	12	9.000 (4.09)	12.500 (317.50) x 7.500 (190.50) x 5.000 (127.00)
3	8	9.000 (4.09)	12.500 (317.50) x 7.500 (190.50) x 5.000 (127.00)

QUICKLAG Industrial Ground Fault Circuit Breakers and Equipment Protectors Plug-on

Description

Plug-on Type
Built and Listed to UL 489

QUICKLAG Ground Fault Circuit Breakers, Class A GFCI
Built and Tested to UL 943
5mA Trip Sensitivity

Type QPGF: 15-50 Amperes, 10,000 AIC
Type QPHGF: 15-30 Amperes, 22,000 AIC

QUICKLAG Ground Fault Equipment Protectors
Built and Listed to UL 1053
30mA Trip Sensitivity

Type QPGFEP: 15-50 Amperes, 10,000 AIC
Type QPHGFEP: 15-30 Amperes, 22,000 AIC

QUICKLAG Type QPGF 1-Pole Ground Fault Circuit Breaker

QUICKLAG Type QPGF 2-Pole Ground Fault Circuit Breaker

Breaker Catalog Numbers

Continuous Ampere Rating at 40°C	Catalog Number	
	1-Pole	2-Pole
	120 Vac	120/240 Vac
Ground Fault Circuit Breakers – 5mA Sensitivity		
QUICKLAG Type: QPGF 10,000 Ampere I.C. Thermal-Magnetic Breakers		
15	QPGF1015	QPGF2015
20	QPGF1020	QPGF2020
25	QPGF1025	QPGF2025
30	QPGF1030	QPGF2030
40	QPGF1040	QPGF2040
50	–	QPGF2050
QUICKLAG Type: QPHGF 22,000 Ampere I.C. Thermal-Magnetic Breakers		
15	QPHGF1015	QPHGF2015
20	QPHGF1020	QPHGF2020
25	QPHGF1025	QPHGF2025
30	QPHGF1030	QPHGF2030
Ground Fault Equipment Protectors – 30mA Sensitivity		
QUICKLAG Type: QPGFEP 10,000 Ampere I.C. Thermal-Magnetic Breakers		
15	QPGFEP1015	QPGFEP2015
20	QPGFEP1020	QPGFEP2020
25	QPGFEP1025	QPGFEP2025
30	QPGFEP1030	QPGFEP2030
40	QPGFEP1040	QPGFEP2040
50	–	QPGFEP2050
QUICKLAG Type: QPHGFEP 22,000 Ampere I.C. Thermal-Magnetic Breakers		
15	QPHGFEP1015	QPHGFEP2015
20	QPHGFEP1020	QPHGFEP2020
25	QPHGFEP1025	QPHGHEP2025
30	QPHGFEP1030	QPHGFEP2030
Special Application Ground Fault Circuit Protectors – 5mA Sensitivity		
QUICKLAG Type: QPGF 10,000 Ampere I.C. with Bell Alarm (W1) or Auxiliary Switch (W2)		
15	QPGF1015W1	QPGF2015W1
20	QPGF1020W1	QPGF2020W1
25	QPGF1025W1	QPGF2025W1
30	QPGF1030W1	QPGF2030W1
40	–	QPGF2040W1
50	–	QPGF2050W1
15	QPGF1015W2	–
20	QPGF1020W2	–
25	QPGF1025W2	–
30	QPGF1030W2	–
Special Application Ground Fault Circuit Protectors – 30mA Sensitivity		
QUICKLAG Type: QPGFEP 10,000 Ampere I.C. with Bell Alarm (W1) or Auxiliary Switch (W2)		
15	QPGFEP1015W1	QPGFEP2015W1
20	QPGFEP1020W1	QPGFEP2020W1
25	QPGFEP1025W1	QPGFEP2025W1
30	QPGFEP1030W1	QPGFEP2030W1
40	–	QPGFEP2040W1
50	–	QPGFEP2050W1
15	QPGFEP1015W2	–
20	QPGFEP1020W2	–
25	QPGFEP1025W2	–
30	QPGFEP1030W2	–

Shipping Data

Shipped individually or in carton quantities.

Poles	Carton Quantity	Approximate Weight Lbs. (Kgs)	Dimensions Inches (mm)
1	20	11.000 (4.99)	12.500 (317.50) x 6.500 (165.10) x 5.000 (127.00)
2	5	5.000 (2.29)	15.500 (393.70) x 6.000 (152.40) x 4.500 (114.30)

Bell Alarm and Auxiliary Contact Schematic

Single-throw double-pole contacts are UL and CSA listed for 5 Amperes at 250 Vac.
Bell Alarm (W1) – contacts change state when breaker trips.
Auxiliary Switch (W2) – contacts change state when breaker is opened (or tripped) or closed.
14-inch long #18 AWG pigtail wire leads provided.

Description

Built and Listed to UL 489

QUICKLAG Circuit Breakers Bolt-on Type

Type BA: 10-125 Amperes, 10,000 AIC
Type QBHW: 15-125 Amperes, 22,000 AIC
Type HBAX: 15-100 Amperes, 42,000 AIC
Type HBAW: 15-30 Amperes, 65,000 AIC

QUICKLAG Type BA 1-Pole

QUICKLAG Type BA 2-Pole

QUICKLAG Type BA 3-Pole

① All products UL and CSA listed.
② All products 15-100A are HACR rated.
③ Switching duty rated for 120 Vac fluorescent light applications.
④ For special low-magnetic breaker order BAB1015L1 or BAB1020L1.

Breaker Catalog Numbers

Continuous Ampere Rating at 40°C	Catalog Number			
	1-Pole①②	2-Pole①②		3-Pole①②
	120/240 Vac	120/240 Vac	240 Vac	240 Vac
QUICKLAG Type: BA 10,000 Ampere I.C. Thermal-Magnetic Breakers				
10	BAB1010	BAB2010	BAB2010H	BAB3010H
15	BAB1015③④	BAB2015	BAB2015H	BAB3015H
20	BAB1020③④	BAB2020	BAB2020H	BAB3020H
25	BAB1025	BAB2025	BAB2025H	BAB3025H
30	BAB1030	BAB2030	BAB2030H	BAB3030H
35	BAB1035	BAB2035	BAB2035H	BAB3035H
40	BAB1040	BAB2040	BAB2040H	BAB3040H
45	BAB1045	BAB2045	BAB2045H	BAB3045H
50	BAB1050	BAB2050	BAB2050H	BAB3050H
55	BAB1055	BAB2055	BAB2055H	BAB3055H
60	BAB1060	BAB2060	BAB2060H	BAB3060H
70	BAB1070	BAB2070	BAB2070H	BAB3070H
80	–	BAB2080	BAB2080H	BAB3080H
90	–	BAB2090	BAB2090H	BAB3090H
100	BAB1100	BAB2100	BAB2100H	BAB3100H
110	–	BAB2110	–	–
125	–	BAB2125	–	–
QUICKLAG Type: QBHW 22,000 Ampere I.C. Thermal-Magnetic Breakers				
15	QBHW1015③	QBHW2015	QBHW2015H	QBHW3015H
20	QBHW1020③	QBHW2020	QBHW2020H	QBHW3020H
25	QBHW1025	QBHW2025	QBHW2025H	QBHW3025H
30	QBHW1030	QBHW2030	QBHW2030H	QBHW3030H
35	QBHW1035	QBHW2035	QBHW2035H	QBHW3035H
40	QBHW1040	QBHW2040	QBHW2040H	QBHW3040H
45	QBHW1045	QBHW2045	QBHW2045H	QBHW3045H
50	QBHW1050	QBHW2050	QBHW2050H	QBHW3050H
55	QBHW1055	QBHW2055	QBHW2055H	QBHW3055H
60	QBHW1060	QBHW2060	QBHW2060H	QBHW3060H
70	QBHW1070	QBHW2070	QBHW2070H	QBHW3070H
80	–	QBHW2080	QBHW2080H	QBHW3080H
90	–	QBHW2090	QBHW2090H	QBHW3090H
100	–	QBHW2100	QBHW2100H	QBHW3100H
110	–	QBHW2110	–	–
125	–	QBHW2125	–	–
QUICKLAG Type: HBAX 42,000 Ampere I.C. Thermal-Magnetic Breakers				
15	HBAX1015③	HBAX2015	–	HBAX3015H
20	HBAX1020③	HBAX2020	–	HBAX3020H
25	HBAX1025	HBAX2025	–	HBAX3025H
30	HBAX1030	HBAX2030	–	HBAX3030H
35	HBAX1035	HBAX2035	–	HBAX3035H
40	HBAX1040	HBAX2040	–	HBAX3040H
45	HBAX1045	HBAX2045	–	HBAX3045H
50	HBAX1050	HBAX2050	–	HBAX3050H
55	HBAX1055	HBAX2055	–	HBAX3055H
60	HBAX1060	HBAX2060	–	HBAX3060H
70	HBAX1070	HBAX2070	–	HBAX3070H
80	–	HBAX2080	–	HBAX3080H
90	–	HBAX2090	–	HBAX3090H
100	–	HBAX2100	–	HBAX3100H
QUICKLAG Type: HBAW 65,000 Ampere I.C. Thermal-Magnetic Breakers				
15	HBAW1015③	HBAW2015	–	HBAW3015H
20	HBAW1020③	HBAW2020	–	HBAW3020H
25	HBAW1025	HBAW2025	–	–
30	HBAW1030	HBAW2030	–	–

Shipping Data

Poles	Carton Quantity	Approximate Weight Lbs. (Kgs)	Dimensions Inches (mm)
1	24	9.000 (4.09)	12.500 (317.50) x 7.500 (190.50) x 5.000 (127.00)
2	18	9.000 (4.09)	12.500 (317.50) x 7.500 (190.50) x 5.000 (127.00)
3	8	9.000 (4.09)	12.500 (317.50) x 7.500 (190.50) x 5.000 (127.00)

QUICKLAG Industrial Ground Fault Circuit Protectors Bolt-on

Description

Bolt-on Type
Built and Listed to UL 489

QUICKLAG Ground Fault Circuit Breakers, Class A GFCI
Built and Tested to UL 943
5mA Trip Sensitivity

Type QBGF: 15-50 Amperes, 10,000 AIC
Type QBHGF: 15-30 Amperes, 22,000 AIC

QUICKLAG Ground Fault Equipment Protectors
Built and Tested to UL 1053
30mA Trip Sensitivity

Type QBGFEP: 15-50 Amperes, 10,000 AIC
Type QBHGFEP: 15-30 Amperes, 22,000 AIC

QUICKLAG Type QBGF 1-Pole Ground Fault Circuit Breaker

QUICKLAG Type QBGF 2-Pole Ground Fault Circuit Breaker

Breaker Catalog Numbers

Continuous Ampere Rating at 40°C	Catalog Number	
	1-Pole	2-Pole
	120 Vac	120/240 Vac
Ground Fault Circuit Breakers – 5mA Sensitivity		
QUICKLAG Type: QBGF 10,000 Ampere I.C. Thermal-Magnetic Breakers		
15	QBGF1015	QBGF2015
20	QBGF1020	QBGF2020
25	QBGF1025	QBGF2025
30	QBGF1030	QBGF2030
40	QBGF1040	QBGF2040
50	–	QBGF2050
QUICKLAG Type: QBHGF 22,000 Ampere I.C. Thermal-Magnetic Breakers		
15	QBHGF1015	QBHGF2015
20	QBHGF1020	QBHGF2020
25	QBHGF1025	QBHGF2025
30	QBHGF1030	QBHGF2030
Ground Fault Equipment Protectors – 30mA Sensitivity		
QUICKLAG Type: QBGFEP 10,000 Ampere I.C. Thermal-Magnetic Breakers		
15	QBGFEP1015	QBGFEP2015
20	QBGFEP1020	QBGFEP2020
25	QBGFEP1025	QBGFEP2025
30	QBGFEP1030	QBGFEP2030
40	QBGFEP1040	QBGFEP2040
50	–	QBGFEP2050
QUICKLAG Type: QBHGFEP 22,000 Ampere I.C. Thermal-Magnetic Breakers		
15	QBHGFEP1015	QBHGFEP2015
20	QBHGFEP1020	QBHGFEP2020
25	QBHGFEP1025	QBHGFEP2025
30	QBHGFEP1030	QBHGFEP2030
Special Application Ground Fault Circuit Protectors – 5mA Sensitivity		
QUICKLAG Type: QBGF 10,000 Ampere I.C. with Bell Alarm (W1) or Auxiliary Switch (W2)		
15	QBGF1015W1	QBGF2015W1
20	QBGF1020W1	QBGF2020W1
25	QBGF1025W1	QBGF2025W1
30	QBGF1030W1	QBGF2030W1
40	–	QBGF2040W1
50	–	QBGF2050W1
15	QBGF1015W2	–
20	QBGF1020W2	–
25	QBGF1025W2	–
30	QBGF1030W2	–
Special Application Ground Fault Circuit Protectors – 30mA Sensitivity		
QUICKLAG Type: QBGFEP 10,000 Ampere I.C. with Bell Alarm (W1) or Auxiliary Switch (W2)		
15	QBGFEP1015W1	QBGFEP2015W1
20	QBGFEP1020W1	QBGFEP2020W1
25	QBGFEP1025W1	QBGFEP2025W1
30	QBGFEP1030W1	QBGFEP2030W1
40	–	QBGFEP2040W1
50	–	QBGFEP2050W1
15	QBGFEP1015W2	–
20	QBGFEP1020W2	–
25	QBGFEP1025W2	–
30	QBGFEP1030W2	–

Shipping Data

Poles	Carton Quantity	Approximate Weight Lbs. (Kgs)	Dimensions Inches (mm)
1	20	11.000 (4.99)	12.500 (317.50) x 6.500 (165.10) x 5.000 (127.00)
2	5	5.000 (2.29)	15.500 (393.70) x 6.000 (152.40) x 4.500 (114.30)

Bell Alarm and Auxiliary Contact Schematic

Single-throw double-pole contacts are UL and CSA listed for 5 Amperes at 250 Vac.
Bell Alarm (W1) – contacts change state when breaker trips.
Auxiliary Switch (W2) – contacts change state when breaker is opened (or tripped) or closed.
14-inch long #18 AWG pigtail wire leads provided.

QUICKLAG Industrial Circuit Breakers Cable-in/Cable-out (1 inch per pole)

Description

Built and Listed to UL 489

QUICKLAG Circuit Breakers Cable-in/Cable-out Type

Type QC: 10-100 Amperes, 10,000 AIC
Type QCHW: 15-100 Amperes, 22,000 AIC
Type QHCX: 15-100 Amperes, 42,000 AIC
Type QHCW: 15-30 Amperes, 65,000 AIC

QUICKLAG Type QC 1-Pole

QUICKLAG Type QC 3-Pole

QUICKLAG Type QC 4-Pole

Breaker Catalog Numbers

Continuous Ampere Rating at 40°C	Catalog Number				
	1-Pole①②	2-Pole①②		3-Pole①②	4-Pole①②
	120/240 Vac	120/240 Vac	240 Vac	240 Vac	240 Vac
QUICKLAG Type: QC 10,000 Ampere I.C. Thermal-Magnetic Breakers					
10	QC1010	QC2010	QC2010H	QC3010H	QC4010H
15	QC1015③④	QC2015	QC2015H	QC3015H	QC4015H
20	QC1020③④	QC2020	QC2020H	QC3020H	QC4020H
25	QC1025	QC2025	QC2025H	QC3025H	QC4025H
30	QC1030	QC2030	QC2030H	QC3030H	QC4030H
35	QC1035	QC2035	QC2035H	QC3035H	QC4035H
40	QC1040	QC2040	QC2040H	QC3040H	QC4040H
45	QC1045	QC2045	QC2045H	QC3045H	QC4045H
50	QC1050	QC2050	QC2050H	QC3050H	QC4050H
55	QC1055	QC2055	QC2055H	QC3055H	QC4055H
60	QC1060	QC2060	QC2060H	QC3060H	QC4060H
70	QC1070	QC2070	QC2070H	QC3070H	QC4070H
80	–	QC2080	QC2080H	QC3080H	QC4080H
90	–	QC2090	QC2090H	QC3090H	QC4090H
100	QC1100	QC2100	QC2100H	QC3100H	QC4100H
QUICKLAG Type: QCHW 22,000 Ampere I.C. Thermal-Magnetic Breakers					
15	QCHW1015③	QCHW2015	QCHW2015H	QCHW3015H	QCHW4015H
20	QCHW1020③	QCHW2020	QCHW2020H	QCHW3020H	QCHW4020H
25	QCHW1025	QCHW2025	QCHW2025H	QCHW3025H	QCHW4025H
30	QCHW1030	QCHW2030	QCHW2030H	QCHW3030H	QCHW4030H
35	QCHW1035	QCHW2035	QCHW2035H	QCHW3035H	QCHW4035H
40	QCHW1040	QCHW2040	QCHW2040H	QCHW3040H	QCHW4040H
45	QCHW1045	QCHW2045	QCHW2045H	QCHW3045H	QCHW4045H
50	QCHW1050	QCHW2050	QCHW2050H	QCHW3050H	QCHW4050H
55	QCHW1055	QCHW2055	QCHW2055H	QCHW3055H	QCHW4055H
60	QCHW1060	QCHW2060	QCHW2060H	QCHW3060H	QCHW4060H
70	QCHW1070	QCHW2070	QCHW2070H	QCHW3070H	QCHW4070H
80	–	QCHW2080	QCHW2080H	QCHW3080H	QCHW4080H
90	–	QCHW2090	QCHW2090H	QCHW3090H	QCHW4090H
100	–	QCHW2100	QCHW2100H	QCHW3100H	QCHW4100H
QUICKLAG Type: QHCX 42,000 Ampere I.C. Thermal-Magnetic Breakers					
15	QHCX1015③	QHCX2015	–	QHCX3015H	–
20	QHCX1020③	QHCX2020	–	QHCX3020H	–
25	QHCX1025	QHCX2025	–	QHCX3025H	–
30	QHCX1030	QHCX2030	–	QHCX3030H	–
35	QHCX1035	QHCX2035	–	QHCX3035H	–
40	QHCX1040	QHCX2040	–	QHCX3040H	–
45	QHCX1045	QHCX2045	–	QHCX3045H	–
50	QHCX1050	QHCX2050	–	QHCX3050H	–
55	QHCX1055	QHCX2055	–	QHCX3055H	–
60	QHCX1060	QHCX2060	–	QHCX3060H	–
70	QHCX1070	QHCX2070	–	QHCX3070H	–
80	–	QHCX2080	–	QHCX3080H	–
90	–	QHCX2090	–	QHCX3090H	–
100	–	QHCX2100	–	QHCX3100H	–
QUICKLAG Type: QHCW 65,000 Ampere I.C. Thermal-Magnetic Breakers					
15	QHCW1015③	QHCW2015	–	QHCW3015H	–
20	QHCW1020③	QHCW2020	–	QHCW3020H	–
25	QHCW1025	QHCW2025	–	–	–
30	QHCW1030	QHCW2030	–	–	–

Shipping Data

Poles	Carton Quantity	Approximate Weight Lbs. (Kgs)	Dimensions Inches (mm)
1	24	9.000 (4.09)	12.500 (317.50) x 7.500 (190.50) x 5.000 (127.00)
2	18	9.000 (4.09)	12.500 (317.50) x 7.500 (190.50) x 5.000 (127.00)
3	8	9.000 (4.09)	12.500 (317.50) x 7.500 (190.50) x 5.000 (127.00)

① All products UL and CSA listed.
② All products 10-100A are HACR rated.
③ Switching duty rated for 120 Vac fluorescent light applications only.
④ For special low-magnetic breaker order QC1015L1 or QC1020L1.

Description

Built and Listed to UL 489

Type QCR and QCF Circuit Breakers are UL listed Circuit Breakers that are suitable for use as branch circuit protectors.

Applications

QCR and QCF Circuit Breakers are only 1/2-inch wide per pole and are excellent for general purpose industrial applications where space savings is required.

Product Features and Ratings

- 1/2-inch wide per pole
- Cable-in/Cable-out
- Black cases with black handles
- Three position handle: ON, Tripped (center), OFF
- Thermal-Magnetic Protection
- UL File E7819
- CSA File LR48907
- One, two and three pole
- 10 kAIC at 120/240 Vac, 10-60 Amperes
- 22 kAIC at 120/240 Vac, 15-20 Amperes
- 10 kAIC at 240 Vac, 10-30 Amperes
- 3 kAIC at 62.5 Vdc (1 Pole)
- 3 kAIC at 130 Vdc (2 Poles in Series)
- Normal Operating Environment: 0-40°C 5-95% Humidity (Non-Condensating)

Additional Ratings

In addition to the ratings shown for the 1/2-inch wide QCR and QCF, the complete QC breaker line includes:

- 1-4 Poles
- 5-100 Amperes
- 10 through 65 kAIC
- 120/240 and 240 Vac
- 1-inch per pole

1-Pole 2-Pole

QCR (Rear-Mounted Breakers)

1-Pole 2-Pole

QCF (Front-Mounted Breakers)

3-Pole

QCR (Rear-Mounted Breakers)

3-Pole

QCF (Front-Mounted Breakers)

Type QCR have as a standard feature provisions for 35mm DIN-Rail rear mounting with a spring-loaded release. Optional clips for individual mounting are available as a separate accessory.

Type QCF have two threaded steel inserts to facilitate front mounting with #6-32 steel screws. The clamp type terminals accessible from the rear of the breaker so that cables can be accessed without removal of the breaker from the front cover.

QCR 1-Pole Breaker with QCRMTGFT Clips (Qty. 2) Individually Mounted

QCF Breaker Front Panel Mounted

QUICKLAG Industrial Circuit Breakers Cable-in/Cable-out (1/2 inch per pole)

Breaker Catalog Numbers①②③④

Continuous Ampere Rating at 40°C	QCR Breaker 10 kAIC Interruption Ratings⑤				QCF Breaker 10 kAIC Interruption Ratings⑤			
	120/240 Vac	120/240 Vac	240 Vac⑥		120/240 Vac	120/240 Vac	240 Vac⑥	
	1-Pole	2-Pole	2-Pole	3-Pole	1-Pole	2-Pole	2-Pole	3-Pole
QCR Breaker 10 kAIC Interruption Ratings⑤					**QCF Breaker 10 kAIC Interruption Ratings⑤**			
10	QCR1010 QCR1010T –	QCR2010 QCR2010T QCR2010P	– – –	– – –	QCF1010 QCF1010T –	QCF2010 QCF2010T –	– – –	– – –
15	QCR1015⑦ QCR1015T⑦ –	QCR2015 QCR2015T QCR2015P	QCR2015H QCR2015HT –	QCR3015H QCR3015HT –	QCF1015② QCF1015T② –	QCF2015 QCF2015T –	QCF2015H QCF2015HT –	QCF3015H QCF3015HT –
20	QCR1020⑦ QCR1020T⑦ –	QCR2020 QCR2020T QCR2020P	QCR2020H QCR2020HT –	QCR3020H QCR3020HT –	QCF1020② QCF1020T② –	QCF2020 QCF2020T –	QCF2020H QCF2020HT –	QCF3020H QCF3020HT –
25	QCR1025 QCR1025T –	QCR2025 QCR2025T QCR2025P	QCR2025H QCR2025HT –	QCR3025H QCR3025HT –	QCF1025 QCF1025T –	QCF2025 QCF2025T –	QCF2025H QCF2025HT –	QCF3025H QCF3025HT –
30	QCR1030 QCR1030T –	QCR2030 QCR2030T QCR2030P	QCR2030H QCR2030HT –	QCR3030H QCR3030HT –	QCF1030 QCF1030T –	QCF2030 QCF2030T –	QCF2030H QCF2030HT –	QCF3030H QCF3030HT –
35	QCR1035 –	QCR2035 QCR2035P	– –	– –	QCF1035 –	QCF2035 –	– –	– –
40	QCR1040 –	QCR2040 QCR2040P	– –	– –	QCF1040 –	QCF2040 –	– –	– –
45	QCR1045 –	QCR2045 QCR2045P	– –	– –	QCF1045 –	QCF2045 –	– –	– –
50	QCR1050 –	QCR2050 QCR2050P	– –	– –	QCF1050 –	QCF2050 –	– –	– –
55	QCR1055 –	QCR2055 QCR2055P	– –	– –	QCF1055 –	QCF2055 –	– –	– –
60⑧	QCR1060 –	QCR2060 QCR2060P	– –	– –	QCF1060 –	QCF2060 –	– –	– –
QCR Breaker 22 kAIC Interruption Ratings					**QCF Breaker 22 kAIC Interruption Ratings**			
15	QCRH1015⑦ QCRH1015T⑦	QCRH2015 QCRH2015T	– –	– –	QCFH1015⑦ QCFH1015T⑦	QCFH2015 QCFH2015T	– –	– –
20	QCRH1020⑦ QCRH1020T⑦	QCRH2020 QCRH2020T	– –	– –	QCFH1020⑦ QCFH1020T⑦	QCFH2020 QCFH2020T	– –	– –

Available QCR and QCF Breaker Accessories

Catalog Number	Description
QCRMTGFT	Steel mounting clip mounts QCR breaker if individual mounting is required. Quantity two required for 1- and 2-pole and four required for 3-pole breakers.
QCRFPL1P	Removable padlock device for single-pole QCR or QCF breaker.
QCRFPLMP	Removable padlock device for multi-pole QCR or QCF breaker.
QCRFLOFF	Padlock bracket assembly for QCR or QCF single or multi-pole breakers (off only).

① Standard breaker terminals are box type lugs.

② Breakers with "T" Catalog Number Suffix are suitable for line and load side ring terminal connection (#10-32 plus/minus terminal screw provided).

③ Breakers with "P" Catalog Number Suffix are suitable for terminating 2 #10 AWG Quick-Connect Type Terminals per phase on breaker load side.

④ Breakers with Shunt Trip Attachment (extra pole required on breaker right-hand side) are available. Contact Cutler-Hammer.

⑤ All ratings 15 to 60 amperes are HACR rated.

⑥ Breakers with "H" Catalog Suffix have 240 Vac construction.

⑦ All 15 and 20 ampere single-pole breakers are SWD (Switching Duty) rated for fluorescent lighting applications.

⑧ 60/75°C Cu/Al wire on all ratings except 60 amperes which requires Cu only conductor.

QCR and QCF Breaker Factory Installed Terminals

QCR and QCF Standard Box Terminals
Factory installed line and load side breaker terminal to accommodate #14 AWG to #4 AWG wire.

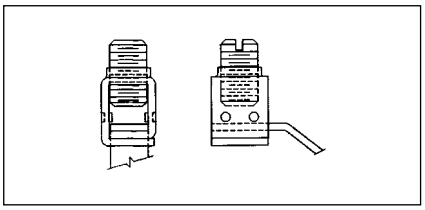

QCR Quick-Connect Terminals
Factory installed two-prong quick-connect terminal on breaker load side suitable for terminating two #10 AWG wire with insulated slip-on terminals as shown. Line side terminal is the standard type.

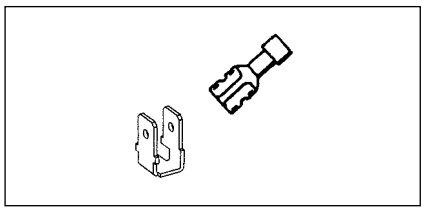

Catalog Suffix "P"

QCR and QCF Ring or Spade Lug Terminals
(10 to 30 ampere ratings only): Factory installed line and load side terminals each equipped with a #10-32 screw suitable for terminating one #10 AWG wire with insulated ring or spade type terminal as shown.

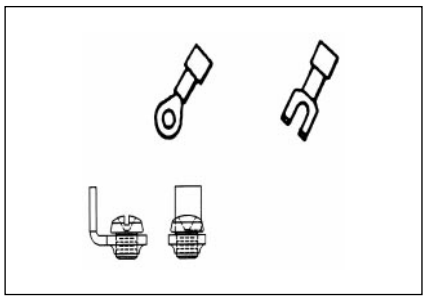

Catalog Suffix "T"

Description

Cable-in/Cable-out Type
Built and Listed to UL 489

QUICKLAG Ground Fault Circuit Breakers, Class A GFCI
Built and Tested to UL 943
5mA Trip Sensitivity

Type QCGF: 15-50 Amperes, 10,000 AIC
Type QCHGF: 15-30 Amperes, 22,000 AIC

QUICKLAG Ground Fault Equipment Protectors
Built and Tested to UL 1053
30mA Trip Sensitivity

Type QCGFEP: 15-50 Amperes, 10,000 AIC
Type QCHGFEP: 15-30 Amperes, 22,000 AIC

QUICKLAG Type QCGF 1-Pole Ground Fault Circuit Breaker

QUICKLAG Type QCGF 2-Pole Ground Fault Circuit Breaker

Breaker Catalog Numbers

Continuous Ampere Rating at 40°C	Catalog Number	
	1-Pole①	2-Pole①
	120 Vac	120/240 Vac
Ground Fault Circuit Breakers – 5mA Sensitivity		
QUICKLAG Type: QCGF 10,000 Ampere I.C. Thermal-Magnetic Breakers		
15	QCGF1015	QCGF2015
20	QCGF1020	QCGF2020
25	QCGF1025	QCGF2025
30	QCGF1030	QCGF2030
40	QCGF1040	QCGF2040
50	–	QCGF2050
QUICKLAG Type: QCHGF 22,000 Ampere I.C. Thermal-Magnetic Breakers		
15	QCHGF1015	QCHGF2015
20	QCHGF1020	QCHGF2020
25	QCHGF1025	QCHGF2025
30	QCHGF1030	QCHGF2030
Ground Fault Equipment Protectors – 30mA Sensitivity		
QUICKLAG Type: QCGFEP 10,000 Ampere I.C. Thermal-Magnetic Breakers		
15	QCGFEP1015	QCGFEP2015
20	QCGFEP1020	QCGFEP2020
25	QCGFEP1025	QCGFEP2025
30	QCGFEP1030	QCGFEP2030
40	QCGFEP1040	QCGFEP2040
50	–	QCGFEP2050
QUICKLAG Type: QCHGFEP 22,000 Ampere I.C. Thermal-Magnetic Breakers		
15	QCHGFEP1015	QCHGFEP2015
20	QCHGFEP1020	QCHGFEP2020
25	QCHGFEP1025	QCHGFEP2025
30	QCHGFEP1030	QCHGFEP2030
Special Application Ground Fault Circuit Protector – 5mA Sensitivity		
QUICKLAG Type: QCGF 10,000 Ampere I.C. with Bell Alarm (W1) or Auxiliary Switch (W2)		
15	QCGF1015W1	QCGF2015W1
20	QCGF1020W1	QCGF2020W1
25	QCGF1025W1	QCGF2025W1
30	QCGF1030W1	QCGF2030W1
40	–	QCGF2040W1
50	–	QCGF2050W1
15	QCGF1015W2	–
20	QCGF1020W2	–
25	QCGF1025W2	–
30	QCGF1030W2	–
Special Application Ground Fault Equipment Protectors – 30mA Sensitivity		
QUICKLAG Type: QCGFEP 10,000 Ampere I.C. with Bell Alarm (W1) or Auxiliary Switch (W2)		
15	QCGFEP1015W1	QCGFEP2015W1
20	QCGFEP1020W1	QCGFEP2020W1
25	QCGFEP1025W1	QCGFEP2025W1
30	QCGFEP1030W1	QCGFEP2030W1
40	–	QCGFEP2040W1
50	–	QCGFEP2050W1
15	QCGFEP1015W2	–
20	QCGFEP1020W2	–
25	QCGFEP1025W2	–
30	QCGFEP1030W2	–

Shipping Data

Poles	Carton Quantity	Approximate Weight Lbs. (Kgs)	Dimensions Inches (mm)
1	20	11.000 (4.99)	12.500 (317.50) x 6.500 (165.10) x 5.000 (127.00)
2	5	5.000 (2.29)	15.500 (393.70) x 6.000 (152.40) x 4.500 (114.30)

① All products UL and CSA listed.

Bell Alarm and Auxiliary Contact Schematic

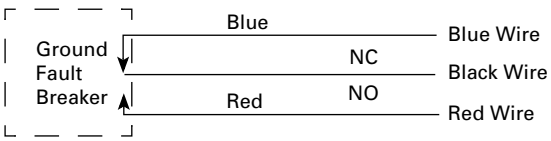

Single-throw double-pole contacts are UL and CSA listed for 5 Amperes at 250 Vac.
Bell Alarm (W1) – contacts change state when breaker trips.
Auxiliary Switch (W2) – contacts change state when breaker is opened (or tripped) or closed.
14-inch long #18 AWG pigtail wire leads provided.

Types GHBS and GBHS Solenoid-Operated, Remote-Controlled

Description

GHBS and GBHS circuit breakers are bolt-on branch circuit breakers designed for use in panelboards and are ideally suited for lighting control applications. In addition to providing conventional branch circuit protection, they include a unique solenoid-operated mechanism that provides for efficient breaker pulse-on and pulse-off operation when used with a suitable controller like the Cutler-Hammer Pow-R-Command lighting control system.

Product Features

- Bolt-on Line-Side Terminal
- Cable Connected Load-Side Terminal
- 3-Prong Control Terminal (Common, Solenoid, Auxiliary Switch)
- Bi-Metal Assembly for Thermal Overload Protection
- Fast Acting Short Circuit Protection
- Arc-Runner and Arc-Chute Assembly for Fast Acting Arc Extinction
- Three Position Handle: OFF, TRIP (Center), ON
- Handle in "ON" Position Enables Remote Control
- Handle in "OFF" Position Disables Remote Control
- Handle Permits Manual Switching When Control Power is Lost
- Mechanical Trip Indicator Window (Red-ON, Green-OFF/TRIPPED)
- 15 and 20 Ampere Breakers SWD (Switching Duty) Rated
- HID Ratings for HID (High Intensity Discharge) Lighting
- Auxiliary Switch for Control Circuit Feedback

1-Pole

2-Pole

GHBS UL 489 Interrupting Ratings

Circuit Breaker Type①	Number of Poles	Interrupting Capacity (Symmetrical Amperes)			
		Rating Amperes②	Volts Ac (50/60 Hz)		
			120	240	277/480
GHBS1015D	1	15	65,000	–	14,000
GHBS1020D	1	20	65,000	–	14,000
GHBS1030D	1	30	65,000	–	14,000
GHBS2015D	2	15	–	65,000	14,000
GHBS2020D	2	20	–	65,000	14,000
GHBS2030D	2	30	–	65,000	14,000

Instruction Leaflet/FRED Number 15546

GBHS CSA 22.2 Interrupting Ratings

Circuit Breaker Type	Number of Poles	Interrupting Capacity (Symmetrical Amperes)	
		Rating Amperes②	Volts Ac (50/60 Hz)
			347/600
GBHS1015D	1	15	10,000
GBHS1020D	1	20	10,000
GBHS2015D	2	15	10,000
GBHS2020D	2	20	10,000

15-20 Amperes

30 Amperes

Terminal Type

For load-side. Terminals are UL listed as suitable for wire type and size given below.

Circuit Breaker Amperes	Terminal Type	Screw Head Type	Wire Type	AWG Wire Range
15-20	Clamp	Slotted	Cu/Al	#14-#10
30	Box	Slotted	Cu/Al	#14-#2

Dimensions Per Pole, Inches (mm)

Width	Height	Depth
1.000 (25.40)	4.125 (104.78)	2.810 (71.37)

Dimensions in parentheses in millimeters.

① All UL listed circuit breakers are HID (High Intensity Discharge) rated.
② Continuous current rating at 40°C.

Wiring Diagrams

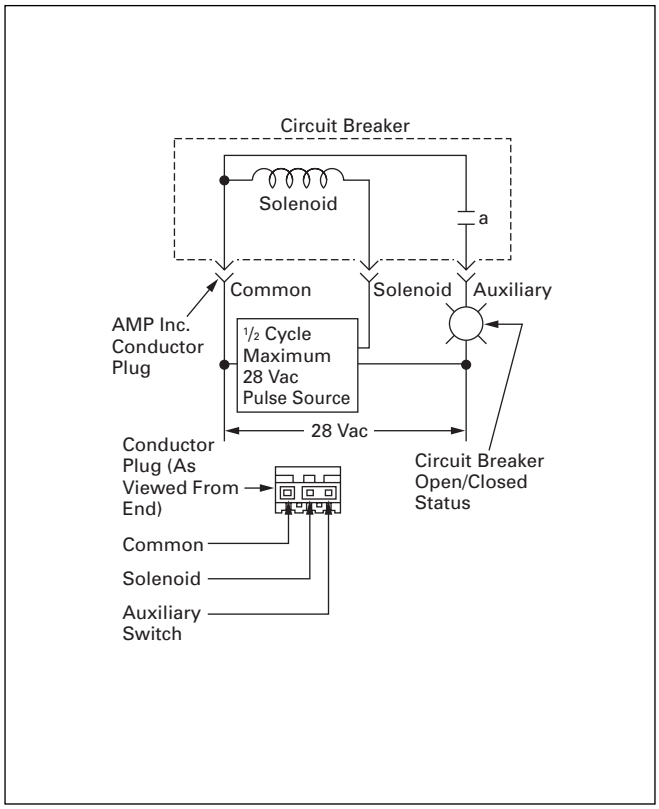

Typical Single-Pole Circuit Breaker Schematic Diagram and Conductor Plug Wiring Connections

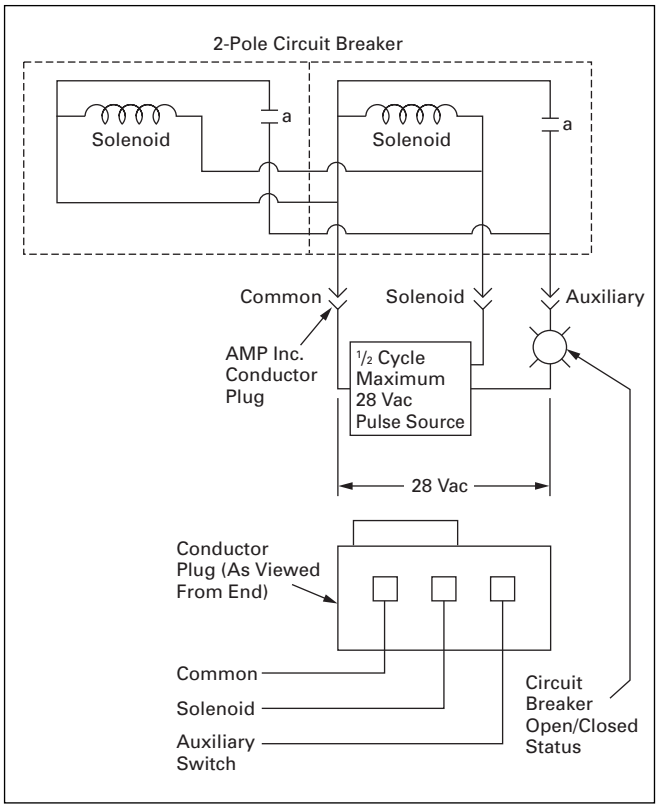

Circuit Breaker Schematic Diagram and Conductor Plug Wiring Connections for 2-Pole

Remote Control Operation

The remote-control capability of the breaker is "armed" when the breaker handle is manually switched to the "ON" position. Once armed, the breaker can be pulsed "ON" and "OFF" by a controller device which provides an ac pulse of specified magnitude and duration to the solenoid operated mechanism. Control connections to the breaker are provided through a male conductor plug (supplied by others) which snaps into the female connector provided with the breaker.
A normally open (a) auxiliary contact provides for breaker "ON"/"OFF" status indication to the remote controller and/or indicating lamp.

The remote-control capability of the breaker is "disarmed" when the breaker handle is in the "OFF" or "TRIPPED" position. In the event the breaker automatically trips, the breaker must be reset manually.

Breaker Solenoid and Operating Data

- Ambient Temperature: 0-40° C
- Nominal Pulse Magnitude: 28 volts ac RMS
- Tolerance: +10% to -15% of Nominal Voltage
- Pulse Duration: 1/2 cycle (8-10 ms)
- Minimum Recommended Pulse Current at Nominal Voltage:
  1-Pole: 4.9 Amperes Peak, 3.5 Amperes RMS
  2-Pole: 7.84 Amperes Peak, 5.6 Amperes RMS
- Breaker Operating Time: 20-40 ms
- Maximum Breaker Cycling: 6 Operations per Minute
- Humidity: 0-95% non-Condensing

Description

QUICKLAG International Circuit Breakers

Plug-on Type HQP: 10-100 Amperes
Bolt-on Type BA: 10-100 Amperes
Cable-in/Cable-out Type QC:
10-100 Amperes

Built and Test Certified to BS3871, Pt. 1 50/60 Hz, 40°C

Interrupting Ratings

	Suffix E	Suffix HE
NEMA 120/240 Vac	10,000 AIC	10,000 AIC
BS3871 220/380, 240/415 Vac	3,000 AIC	6,000 AIC

QUICKLAG International Ground Fault Circuit Breakers

Plug-on Type GFXB: 10-40 Amperes
Bolt-on Type GFXBB: 10-40 Amperes
Cable-in/Cable-out Type GFXBC:
10-40 Amperes

Built and Test Certified to
BS3871, Pt. 1
BS3871, Section 31-C
BS4293

50/60 Hz, 40°C

30 mA Sensitivity

Interrupting Rating

BS3871 220/380, 240/415 Vac	3,000 AIC

Shipping Data

Miniature Circuit Breaker	No. of Poles	Std. Carton Qty.	Approx. Carton Weight Lbs. (Kgs)	Approx. Standard Carton Dimensions Inches (mm)
QUICKLAG Types B, P, C – All	1	24	9.000 (4.09)	12.500 (317.50) x 7.500 (190.50) x 5.000 (127.00)
QUICKLAG Types B, P, C – All	2	12	9.000 (4.09)	12.500 (317.50) x 7.500 (190.50) x 5.000 (127.00)
QUICKLAG Types B, P, C – All	3	8	9.000 (4.09)	12.500 (317.50) x 7.500 (190.50) x 5.000 (127.00)
QUICKLAG Ground Fault				
Type P – All	1	20	11.000 (4.99)	12.500 (317.50) x 6.500 (165.10) x 5.000 (127.00)
Types B and C – All	1	20	11.000 (4.99)	12.500 (317.50) x 7.000 (177.80) x 5.500 (139.70)
Types P and B – All	2	5	5.000 (2.27)	12.500 (317.50) 6.000 (152.40) 4.500 (114.30)

Breaker Catalog Numbers

Continuous Ampere Rating at 40°C	Catalog Number 1-Pole	2-Pole	3-Pole	Gound Fault 1-Pole 30 mA Sensitivity
	240/415 Vac	240/415 Vac	240/415 Vac	240/415 Vac
3,000 Amperes I.C. (M3) Plug-on Thermal-Magnetic Circuit Breakers				
10	HQP1010E	HQP2010E	HQP3010E	GFXB110B2
15	HQP1015E	HQP2015E	HQP3015E	GFXB115B2
16	–	–	–	GFXB116B2
20	HQP1020E	HQP2020E	HQP3020E	GFXB120B2
25	HQP1025E	HQP2025E	HQP3025E	GFXB125B2
30	HQP1030E	HQP2030E	HQP3030E	GFXB130B2
32	–	–	–	GFXB132B2
40	HQP1040E	HQP2040E	HQP3040E	GFXB140B2
50	HQP1050E	HQP2050E	HQP3050E	–
60	HQP1060E	HQP2060E	HQP3060E	–
70	HQP1070E	HQP2070E	HQP3070E	–
90	–	HQP2090E	HQP3090E	–
100	–	HQP2100E	HQP3100E	–
6,000 Ampere I.C. (M6) Plug-on Thermal-Magnetic Circuit Breakers				
15	HQP1015HE	HQP2015HE	HQP3015HE	–
20	HQP1020HE	HQP2020HE	HQP3020HE	–
25	HQP1025HE	HQP2025HE	HQP3025HE	–
30	HQP1030HE	HQP2030HE	HQP3030HE	–
40	HQP1040HE	HQP2040HE	HQP3040HE	–
50	HQP1050HE	HQP2050HE	HQP3050HE	–
60	HQP1060HE	HQP2060HE	HQP3060HE	–
70	HQP1070HE	HQP2070HE	HQP3070HE	–
90	–	HQP2090HE	HQP3090HE	–
100	–	HQP2100HE	HQP3100HE	–
3,000 Ampere I.C. (M3) Bolt-on Thermal-Magnetic Circuit Breakers				
10	BAB1010E	BAB2010E	BAB3010E	GFXBB110B2
15	BAB1015E	BAB2015E	BAB3015E	GFXBB115B2
16	–	–	–	GFXBB116B2
20	BAB1020E	BAB2020E	BAB3020E	GFXBB120B2
25	BAB1025E	BAB2025E	BAB3025E	GFXBB125B2
30	BAB1030E	BAB2030E	BAB3030E	GFXBB130B2
32	–	–	–	GFXBB132B2
40	BAB1040E	BAB2040E	BAB3040E	GFXBB140B2
50	BAB1050E	BAB2050E	BAB3050E	–
60	BAB1060E	BAB2060E	BAB3060E	–
70	BAB1070E	BAB2070E	BAB3070E	–
90	–	BAB2090E	BAB3090E	–
100	–	BAB2100E	BAB3100E	–
6,000 Ampere I.C. (M6) Bolt-on Thermal-Magnetic Circuit Breakers				
15	BAB1015HE	BAB2015HE	BAB3015HE	–
20	BAB1020HE	BAB2020HE	BAB3020HE	–
25	BAB1025HE	BAB2025HE	BAB3025HE	–
30	BAB1030HE	BAB2030HE	BAB3030HE	–
40	BAB1040HE	BAB2040HE	BAB3040HE	–
50	BAB1050HE	BAB2050HE	BAB3050HE	–
60	BAB1060HE	BAB2060HE	BAB3060HE	–
70	BAB1070HE	BAB2070HE	BAB3070HE	–
90	–	BAB2090HE	BAB3090HE	–
100	–	BAB2100HE	BAB3100HE	–
3,000 Ampere I.C. (M3) Cable-in/Cable-out Thermal-Magnetic Circuit Breakers				
10	QC1010E	QC2010E	QC3010E	GFXBC110B2
15	QC1015E	QC2015E	QC3015E	GFXBC115B2
16	–	–	–	GFXBC116B2
20	QC1020E	QC2020E	QC3020E	GFXBC120B2
25	QC1025E	QC2025E	QC3025E	GFXBC125B2
30	QC1030E	QC2030E	QC3030E	GFXBC130B2
32	–	–	–	GFXBC132B2
40	QC1040E	QC2040E	QC3040E	GFXBC140B2
50	QC1050E	QC2050E	QC3050E	–
60	QC1060E	QC2060E	QC3060E	–
70	QC1070E	QC2070E	QC3070E	–
90	–	QC2090E	QC3090E	–
100	–	QC2100E	QC3100E	–
6,000 Ampere I.C. (M6) Cable-in/Cable-out Thermal-Magnetic Circuit Breakers				
15	QC1015HE	QC2015HE	QC3015HE	–
20	QC1020HE	QC2020HE	QC3020HE	–
25	QC1025HE	QC2025HE	QC3025HE	–
30	QC1030HE	QC2030HE	QC3030HE	–
40	QC1040HE	QC2040HE	QC3040HE	–
50	QC1050HE	QC2050HE	QC3050HE	–
60	QC1060HE	QC2060HE	QC3060HE	–
70	QC1070HE	QC2070HE	QC3070HE	–
90	–	QC2090HE	QC3090HE	–
100	–	QC2100HE	QC3100HE	–

Description

QUICKLAG Switching Neutral Circuit Breakers

Plug-on Type HQP: 10-30 Amperes, 1 and 2 Poles, 10,000 AIC
Bolt-on Type BA: 10-30 Amperes, 1 and 2 Poles, 10,000 AIC
Cable-in Type QC: 10-30 Amperes, 1 and 2 Poles, 10,000 AIC

Switching Neutral QUICKLAG Breakers available in one- and two-pole configurations, plus neutral pole for applications in accordance with NEC 514-5, 240-22, and 380-2. A one-pole device takes two pole spaces, and a two-pole device takes three pole spaces.

QUICKLAG Type P Switching Neutral

QUICKLAG HID (High Intensity Discharge) Breakers

Plug-on Type HQP: 15-60 Amperes, 1 and 2 Poles, 10,000 AIC
Bolt-on Type BA: 15-60 Amperes, 1 and 2 Poles, 10,000 AIC
Cable-in Type QC: 15-60 Amperes, 1 and 2 Poles, 10,000 AIC

Breakers designed specifically for use with high intensity discharge (HID) lighting applications. (UL listed as standard lighting breakers.)

Molded Case Switches Non-Automatic QUICKLAG Molded Case Switch

Plug-on Type HQP: 50, 60,100 Amperes, 1, 2 and 3 Poles
Bolt-on Type BA: 50, 60,100 Amperes, 1, 2 and 3 Poles
Cable-in Type QC: 50, 60,100 Amperes, 1, 2 and 3 Poles

① All products UL and CSA listed.

Breaker Catalog Numbers

Continuous Ampere Rating 40°C	Catalog Number			
	1-Pole①	2-Pole①		3-Pole①
	120/240 Vac	120/240 Vac	240 Vac	240 Vac
QUICKLAG Type: HQP Switching Neutral Thermal-Magnetic Breakers				
10	HQP2010B	HQP3010B	–	–
15	HQP2015B	HQP3015B	–	–
20	HQP2020B	HQP3020B	–	–
25	HQP2025B	HQP3025B	–	–
30	HQP2030B	HQP3030B	–	–
QUICKLAG Type: BA Switching Neutral Thermal-Magnetic Breakers				
10	BAB2010C	BAB3010C	–	–
15	BAB2015C	BAB3015C	–	–
20	BAB2020C	BAB3020C	–	–
25	BAB2025C	BAB3025C	–	–
30	BAB2030C	BAB3030C	–	–
QUICKLAG Type: QC Switching Neutral Thermal-Magnetic Breakers				
10	QC2010B	QC3010B	–	–
15	QC2015B	QC3015B	–	–
20	QC2020B	QC3020B	–	–
25	QC2025B	QC3025B	–	–
30	QC2030B	QC3030B	–	–
QUICKLAG Type: HQP HID (High Intensity Discharge) Thermal-Magnetic Breakers				
15	HQP1015D	HQP2015D	–	–
20	HQP1020D	HQP2020D	–	–
25	HQP1025D	HQP2025D	–	–
30	HQP1030D	HQP2030D	–	–
35	HQP1035D	HQP2035D	–	–
40	HQP1040D	HQP2040D	–	–
50	HQP1050D	HQP2050D	–	–
60	HQP1060D	HQP2060D	–	–
QUICKLAG Type: BA HID (High Intensity Discharge) Thermal-Magnetic Breakers				
15	BAB1015D	BAB2015D	–	–
20	BAB1020D	BAB2020D	–	–
25	BAB1025D	BAB2025D	–	–
30	BAB1030D	BAB2030D	–	–
35	BAB1035D	BAB2035D	–	–
40	BAB1040D	BAB2040D	–	–
50	BAB1050D	BAB2050D	–	–
60	BAB1060D	BAB2060D	–	–
QUICKLAG Type: QC HID (High Intensity Discharge) Thermal-Magnetic Breakers				
15	QC1015D	QC2015D	–	–
20	QC1020D	QC2020D	–	–
25	QC1025D	QC2025D	–	–
30	QC1030D	QC2030D	–	–
35	QC1035D	QC2035D	–	–
40	QC1040D	QC2040D	–	–
50	QC1050D	QC2050D	–	–
60	QC1060D	QC2060D	–	–
QUICKLAG Type: HQP Non-Auto Molded Case Switches				
50	HQP1050N	–	HQP2050N	HQP3050N
60	HQP1060N	–	HQP2060N	HQP3060N
100	HQP1100N	–	HQP2100N	HQP3100N
QUICKLAG Type: BA Non-Auto Molded Case Switches				
50	BAB1050N	–	BAB2050N	BAB3050N
60	BAB1060N	–	BAB2060N	BAB3060N
100	BAB1100N	–	BAB2100N	BAB3100N
QUICKLAG Type: QC Non-Auto Molded Case Switches				
50	QC1050N	–	QC2050N	QC3050N
60	QC1060N	–	QC2060N	QC3060N
100	QC1100N	–	QC2100N	QC3100N

Shipping Data

Miniature Circuit Breaker	No. of Poles	Standard Carton Quantity	Approximate Carton Weight Lbs. (Kgs)	Approximate Standard Carton Dimensions Inches (mm)
QUICKLAG Types B, P, C – All	1	24	9.000 (4.09)	12.500 (317.50) x 7.500 (190.50) x 5.000 (127.00)
QUICKLAG Types B, P, C – All	2	12	9.000 (4.09)	12.500 (317.50) x 7.500 (190.50) x 5.000 (127.00)
QUICKLAG Types B, P, C – All	3	8	9.000 (4.09)	12.500 (317.50) x 7.500 (190.50) x 5.000 (127.00)
QUICKLAG Ground Fault				
Type P – All	1	20	11.000 (4.99)	12.500 (317.50) x 6.500 (165.10) x 5.000 (127.00)
Types B and C – All	1	20	11.000 (4.99)	12.500 (317.50) x 7.000 (177.80) x 5.500 (139.70)
Types P and B – All	2	5	5.000 (2.27)	12.500 (317.50) x 6.000 (152.40) x 4.500 (114.30)

QUICKLAG Industrial Circuit Breakers Accessories

Accessory Type①	Catalog Number	Description	Order in Multiples of
Handle Locks: Non-padlockable	**QL1NPL**	QUICKLAG Type P, B, C – 1 Pole	10
	QL23NPL	QUICKLAG Type P, B, C – 2, 3 Poles	10
Handle Locks: Padlockable	**QL1PL**	QUICKLAG Type P, B, C – 1 Pole	10
	QLPB123PL	QUICKLAG Type P, B – 1, 2, 3 Poles	10
	QC123PL	QUICKLAG Type C – 1, 2, 3 Poles	10
	QLGF12PL	Ground Fault Padlock Device Type P, B – 1, 2 Poles	10
Handle Tie	**QL1HT**	QUICKLAG Handle Tie - 1 Pole	100
Mounting Hardware	**QCFCLIP**	QUICKLAG Type C Face Mounting Clip	24
	QC1FP	QUICKLAG Type C Face Mounting Plate – 1 Pole	10
	QC2FP	QUICKLAG Type C Face Mounting Plate – 2 Poles	10
	QC3FP	QUICKLAG Type C Face Mounting Plate – 3 Poles	10
	QC1FPLOFF	QUICKLAG Type C Face Mounting Plate and Lock-off (Off Only) – 1 Pole	10
	QC2FPLOFF	QUICKLAG Type C Face Mounting Plate and Lock-off (Off Only) – 2 Pole	10
	QC3FPLOFF	QUICKLAG Type C Face Mounting Plate and Lock-off (Off Only) – 3 Pole	10
	QCBCLIP	QUICKLAG Type C Base Mounting Clamp	100
	QC6BP	QUICKLAG Base Mounting Plate – 6 Poles Total	10
	QC4CONB	QUICKLAG Type C Single Point Connector	10
	QCDINADAPT	QUICKLAG Type C DIN Rail Adapter	6
Dummy Breakers	**HQP1000**	QUICKLAG Type P	1
	BAB1000	QUICKLAG Type B	1
	QC1000	QUICKLAG Type C	1
	QC30SAMPLE	QUICKLAG Type C Clear Choice Breaker	4

QL1NPL

QL23NPL

QL1PL

QLPB123PL

QC123PL

QL1HT

QCFCLIP

QC1FP

QC2FP

QC3FP

QCBCLIP

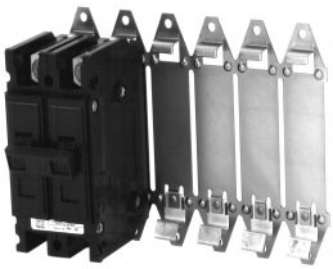
QC6BP

QC4CONB

QCDINADAPT

① See pages 7 and 8 for QCR and QCF accessories.

Factory Modifications①

Type of Modification	Breaker Types	Catalog Suffix
Shunt Trip (Requires 1 extra pole space on right side) 120, 208, 240 Vac 12, 24, 48 Vac/dc Draws 2.6A at 120V Draws 11A at 24Vdc	 QUICKLAG Types P, B and C QUICKLAG Types P, B and C	 S S1
Special Calibration (50°C)	QUICKLAG Types P, B and C	V
Shock Testing	QUICKLAG Types P, B and C	L
Freeze Testing	QUICKLAG Types P, B and C	Y
Moisture-Fungus Treatment	QUICKLAG Types P, B, C and Ground Fault	F

Factory Installed Breaker Terminals

Breaker Type	Continuous Ampere Rating	Standard Line Terminal			Standard Load Terminal			Optional Terminals (20% List Price Adder)	
		Term Type	Wire Type	Wire Range	Term Type	Wire Type	Wire Range	Line	Load
QUICKLAG Type P HQP, QPHW, QHPX, QHPW	10 to 30 35 to 50 55 to 125	Plug-on female clips which mate with the bus stabs			A B C	Cu/Al Cu/Al Cu/Al	#14-#4 #14-#4 #8-1/0	N/A	C C –
QUICKLAG Ground Fault QPGF, QPHGF, QPGFEP, QPHGFEP	10 to 30 40	Plug-on female clips which mate with the bus stabs			A – 1-pole D – 2-pole D	Cu/Al Cu/Al Cu	#14-#4 #14-#8 #14-#8	N/A	C C –
QUICKLAG Type B BAB, QBHW, HBAX, HBAW	10 to 30 35 to 50 55 to 125	Extended tangs which bolt directly to the bus			A – 1- and 2- pole B – 3-pole C	Cu/Al Cu/Al Cu/Al	#14-#4 #14-#4 #8-1/0	N/A	C C –
QUICKLAG Ground Fault QBGF, QBHGF, QBGFEP, QBHGFEP	10 to 30 40	Extended tangs which bolt directly to the bus			A – 1-pole D – 2-pole D	Cu/Al Cu/Al Cu	#14-#4 #14-#8 #14-#8	N/A	N/A
QUICKLAG Type C QC, QCHW, QHCX, QHCW	10 to 20 25 to 60 70 to 100	E F G	Cu/Al Cu/Al Cu/Al	#14-#10	E B C	Cu/Al Cu/Al Cu/Al	#14-#10 #14-#4 #8-1/0	F, G E, G E	F, G, H E, F, G, H E, G, H
QUICKLAG QCR, QCF	10-55 60	A A	Cu/Al Cu	-#14 -#4	A A	Cu/Al Cu	#14 -#4	N/A	N/A
QUICKLAG Ground Fault QCGF, QCHGF, QCGFEP, QCHGFEP	10 to 20 25 to 50	E F	Cu/Al Cu/Al	#14-#10	A A	Cu/Al Cu/Al	#14-#4 #14-#4	F, G E, G	N/A

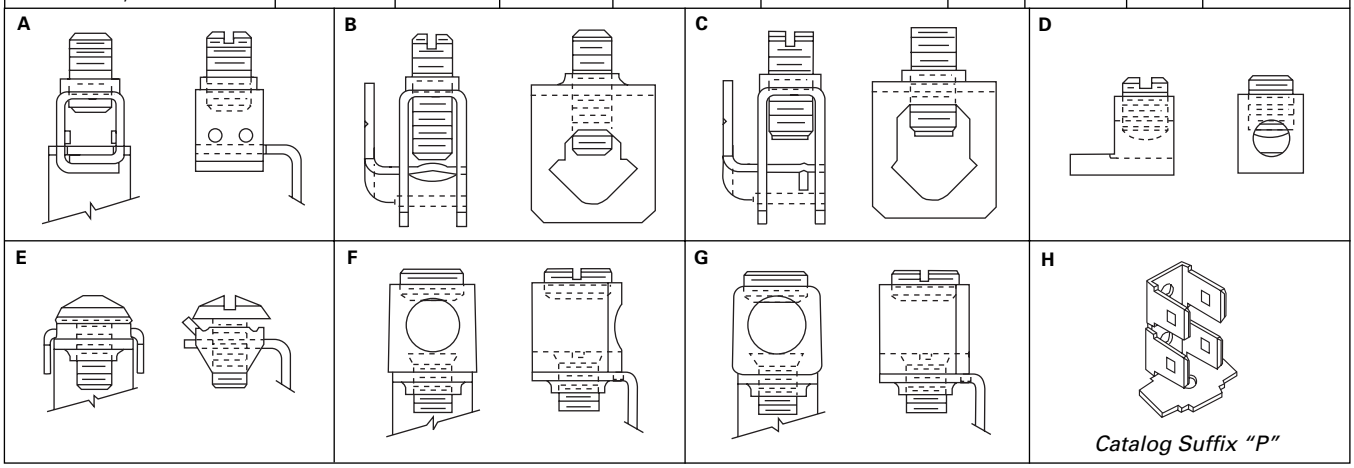

Spare Terminal Hardware Screws (Lugs not Included)

Catalog Number	Order in Multiples of	Terminal Type	Description
QLLDTSA	10	A	QUICKLAG Terminal Screw
QLLDTSB	10	B	QUICKLAG Terminal Screw
QLLDTSC	10	C	QUICKLAG Terminal Screw
QLBHTSE	10	E	QUICKLAG Binding Head Terminal Screw and Clamp
QLLNTSFG	10	F and G	QUICKLAG Terminal Screw

① Contact Cutler-Hammer for factory modifications available for QCR and QCF breakers.

Supplementary Protectors Current Limiting Type Cable-in/Cable-out DIN Rail

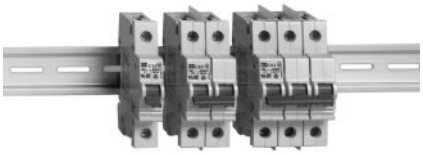

Description

UL 1077 Supplementary Protectors

Type SPCL Supplementary Protectors are IEC circuit breakers that are recognized by UL under UL 1077. They are intended for use as overcurrent protection within an appliance or electrical equipment where branch circuit protection (for example a UL listed Molded Case Circuit Breaker) has already been provided or is not required.

Equipment and Control Circuit Protection

These protectors are ideal for replacing fuses in control circuits. Applications include protecting motor control circuits, small control circuit transformers, relays, contactor coils, power supplies, PLC I/O points, appliances, and electronic equipment.

Product Features

The Type SPCL Supplementary Protectors are provided in light gray cases with charcoal gray handles.

DIN-Rail Mounting: A quick snap-on clip design allows easy installation on 35mm DIN Rail.

Current-Limiting Design: Fast short circuit interruption reduces let-through energy, reducing damage to the circuit.

Thermal-Magnetic Overcurrent Protection: Types B and C overcurrent curves provide maximum reliability and accuracy. Type B protection is normally used for low inrush applications. Type C protection is used for general purpose industrial applications that require higher inrush tolerance.

Center Trip Position: The breaker handle has a unique center trip "Reset" position that indicates an overcurrent trip. "Off" (O) and "On" (I) handle positions are visually indicated by red and green flags.

SPCL Specifications

Standards and Approvals	Number of Poles	Electrical Ratings			
		Continuous Current (Amperes)	Vac 50/60 Hz	Vdc	Ampere Interrupting Capacity
UL 1077 *File No. E162396*	1	0.5-63	120	12-65	10 kA
	2	0.5-63	240	12-130①	10 kA
CSA 22.2 *File No. LR105580-1*	3-4	0.5-63	240		10 kA
	1	0.5-63	277		6 kA
	2-4	0.5-63	480		5 kA
CE EN60898 VDE0660	1-4	0.5-63	240/415		10 kA
Overcurrent Curves	Overcurrent Curve Type B (3-5X) and Type C (5-10X) per VDE 0641, Part 11.				
Degree of Protection	IP20.				
Connecting Terminals	Suitable for Single-Core, Standard, and Flexible Conductors from #14 to #6 AWG (Cu). Recommended Torque is 27 Inch-Pounds.				

SPCL Supplementary Protector Catalog Numbers

Continuous Ampere Rating	Catalog Number			
	1-Pole	2-Pole	3-Pole	4-Pole
C Curve				
0.5	SPCL1C00Ⓢ	SPCL2C00Ⓢ	SPCL3C00Ⓢ	SPCL4C00Ⓞ
1	SPCL1C01Ⓢ	SPCL2C01Ⓢ	SPCL3C01Ⓢ	SPCL4C01Ⓞ
2	SPCL1C02Ⓢ	SPCL2C02Ⓢ	SPCL3C02Ⓢ	SPCL4C02Ⓞ
3	SPCL1C03Ⓢ	SPCL2C03Ⓢ	–	–
4	SPCL1C04Ⓢ	SPCL2C04Ⓢ	SPCL3C04Ⓢ	SPCL4C04Ⓞ
5	SPCL1C05Ⓢ	SPCL2C05Ⓢ	–	–
6	SPCL1C06Ⓢ	SPCL2C06Ⓢ	SPCL3C06Ⓢ	SPCL4C06Ⓞ
7	SPCL1C07Ⓢ	SPCL2C07Ⓢ	–	–
8	SPCL1C08Ⓢ	SPCL2C08Ⓢ	–	–
10	SPCL1C10Ⓢ	SPCL2C10Ⓢ	SPCL3C10Ⓢ	SPCL4C10Ⓞ
13	SPCL1C13Ⓢ	–	–	–
16	SPCL1C16Ⓢ	SPCL2C16Ⓢ	SPCL3C16Ⓢ	SPCL4C16Ⓞ
20	SPCL1C20Ⓢ	SPCL2C20Ⓢ	SPCL3C20Ⓢ	SPCL4C20Ⓞ
25	SPCL1C25Ⓢ	SPCL2C25Ⓢ	SPCL3C25Ⓢ	SPCL4C25Ⓞ
32	SPCL1C32Ⓢ	SPCL2C32Ⓢ	SPCL3C32Ⓢ	SPCL4C32Ⓞ
40	SPCL1C40Ⓢ	SPCL2C40Ⓢ	SPCL3C40Ⓢ	SPCL4C40Ⓞ
50	SPCL1C50Ⓢ	SPCL2C50Ⓢ	SPCL3C50Ⓢ	SPCL4C50Ⓞ
63	SPCL1C63Ⓢ	SPCL2C63Ⓢ	SPCL3C63Ⓢ	SPCL4C63Ⓞ
B Curve				
6	SPCL1B06Ⓢ	SPCL2B06Ⓞ	SPCL3B06Ⓞ	SPCL4B06Ⓞ
10	SPCL1B10Ⓢ	SPCL2B10Ⓞ	SPCL3B10Ⓞ	SPCL4B10Ⓞ
13	SPCL1B13	–	–	–
16	SPCL1B16Ⓢ	SPCL2B16Ⓞ	SPCL3B16Ⓞ	SPCL4B16Ⓞ
20	SPCL1B20Ⓢ	SPCL2B20Ⓞ	SPCL3B20Ⓞ	SPCL4B20Ⓞ
25	SPCL1B25Ⓢ	SPCL2B25Ⓞ	SPCL3B25Ⓞ	SPCL4B25Ⓞ
32	SPCL1B32Ⓢ	SPCL2B32Ⓞ	SPCL3B32Ⓞ	SPCL4B32Ⓞ
40	SPCL1B40Ⓢ	SPCL2B40Ⓞ	SPCL3B40Ⓞ	SPCL4B40Ⓞ
50	SPCL1B50Ⓞ	SPCL2B50Ⓞ	SPCL3B50Ⓞ	SPCL4B50Ⓞ
63	SPCL1B63Ⓞ	SPCL2B63Ⓞ	SPCL3B63Ⓞ	SPCL4B63Ⓞ

Shipping Data

	Packed in Cartons of:	Carton Dimensions Inches (mm)	Approximate Weight Lbs. (Kgs)
1-Pole Units	12	9.000 (228.60) x 4.000 (101.60) x 4.000 (101.60)	10.000 (4.54)
2-Pole Units	6	9.000 (228.60) x 4.000 (101.60) x 4.000 (101.60)	10.000 (4.54)
3-Pole Units	4	9.000 (228.60) x 4.000 (101.60) x 4.000 (101.60)	10.000 (4.54)
4-Pole Units	3	9.000 (228.60) x 4.000 (101.60) x 4.000 (101.60)	10.000 (4.54)

① 130 Vdc rating based on 2 poles connected in series.
Ⓢ Normally stocked.
Ⓞ Special order, contact Cutler-Hammer. Minimum quantities apply.

CE Mark

SPCL protectors carry the CE mark in accordance with Low Voltage Directive (LVD) (73/23/EEC)

SPCL Accessories

Auxiliary/Signal Switch Kit

Catalog Number SPCLUAUX is a field mountable switch kit that attaches to the left side of a SPCL Protector. It is field selectable to auxiliary or signal (bell alarm) configuration. The switch is UL and CSA approved for general purpose ratings of 6 ampere at 240 Vac or 1 ampere at 125 Vdc. Contacts are provided as indicated on the wiring diagram. Screw-type terminals are provided to accommodate up to #16 AWG wire. Recommended torque is approximately 13 inch-pounds.

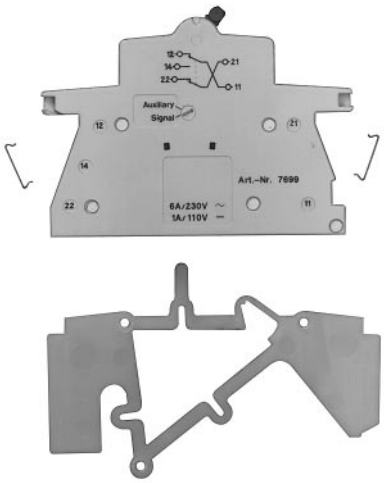

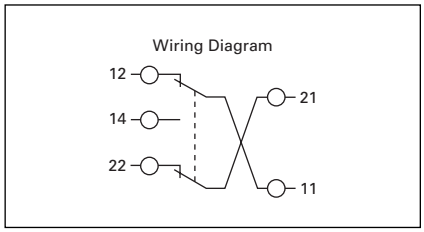

Contact Charts

Contacts	Auxiliary Switch Mode	
	Protector Open	Protector Closed
11 to 12	X	0
11 to 14	0	X
21 to 22	X	0

Contacts	Signal Switch Mode		
	Protector Open	Protector Closed	Protector Tripped
11 to 12	0	0	X
11 to 14	X	X	0
21 to 22	0	0	X

Technical Data

Rated Voltage:	230 Vac/110 Vdc
Rated Current:	6A Ac/1A Dc
Conductor Cross Section:	To 1.5 mm² (No 16 AWG)
Tightening Torque:	1 Nm (13 inch-pounds)
Product:	Catalog Number
Universal Auxiliary Switch:	**SPCLUAUX**

Figure 1

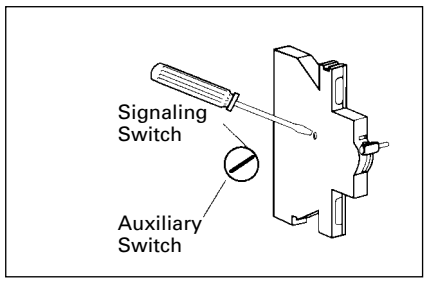

Figure 2

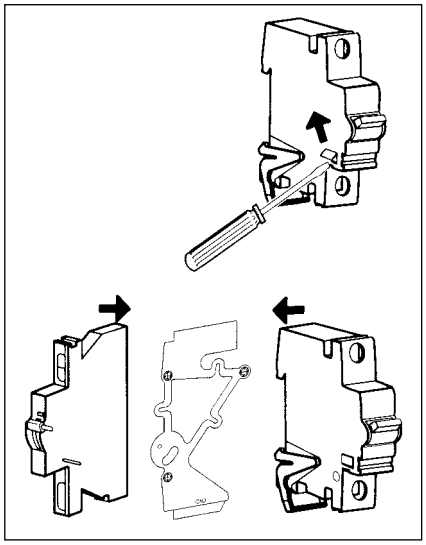

Figure 3

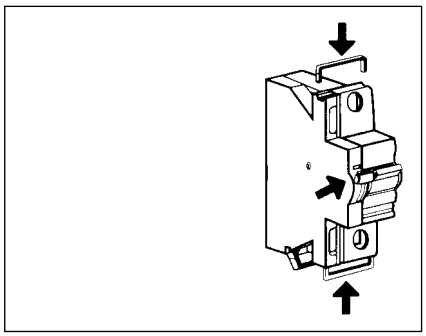

SPCL Accessories

Lock-off Devices

Lock-off Devices

Catalog Number	Description
SPCLPLDEV	Padlockable device, mounts on protector and includes provisions to accept catalog number SPCLOCKEY Padlock
SPCLOCKEY	Padlock with 3 keys

Bus Bar Systems

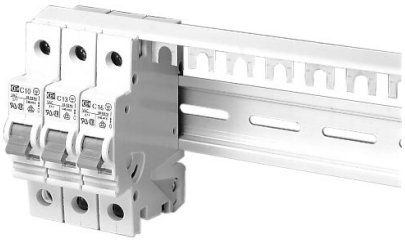

Bus Bar Systems

Catalog Number	Description
SPCLIPB10MM	Single-phase 240 Vac VDE approved Bus Bar, 1 meter in length, 10mm^2 density
SPCL1PB16MM	Single-phase 240 Vac VDE approved Bus Bar, 1 meter in length, 16mm^2 density

Maximum Bus Bar Current①

Conductor Density	End Connect	Center Connect
10 sq. mm	50 Amperes	100 Amperes
16 sq. mm	65 Amperes	130 Amperes

Finger Proofing Shield

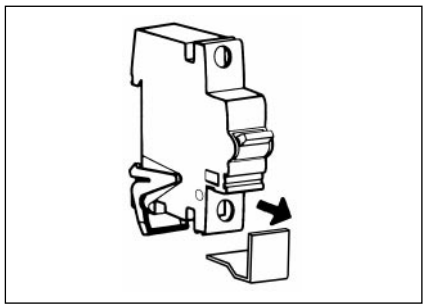

Finger Proofing Shield

Catalog Number	Description
SPCL2000	Clip-on finger proofing shield to enhance finger protection on SPCL protectors. Plastic finger proofing shield clips into upper or lower terminal poles as required.

① Per VDE 0606.

Description

UL 1077 Supplementary Protectors
Type SPHM Supplementary Protectors are IEC circuit breakers that are recognized by UL under UL 1077. They are intended for use as overcurrent protection within an appliance or electrical equipment where branch circuit protection (for example a UL listed Molded Case Circuit Breaker) has already been provided or is not required.

Equipment and Control Circuit Applications
These protectors are ideal for protecting motor control circuits, CPTs, relays, contactor coils, power supplies, PLC I/O points, lighting circuits, appliances, electronic equipment, and replacing fuses.

Product Features

The Type SPHM Supplementary Protectors are provided in light gray cases with charcoal gray handles. Handles are marked with "O" for "Off" and "I" for "On".

DIN Rail Mounting: Easy installation on 35mm DIN Rail. A spring loaded clip is provided for quick release from the DIN Rail mounting.

Heat-Induced Nuisance Tripping Eliminated: The protector is designed to "hold in" at 100% of continuous rated current regardless of ambient temperatures from -40 to +85°C.

Immediate Reset After Trip: The protector can be reset (closed) immediately after an overcurrent trip without a "cooling off" period.

Precise Overcurrent Calibration: The protector can be precisely calibrated to a wide variety of current ranges from 0.1 to 50 amperes continuous. For special ratings not shown, contact Cutler-Hammer.

Flexible Time-Characteristic Curves: Long, Medium, and Short Delay Curves are available. Long Delay are for special extended inrush, Medium for general purpose, and Short Delay for sensitive electronic applications.

1/2 Cycle High-Inrush Tolerance: The protector can be provided with tolerance to various levels of 1/2 cycle current spikes. General purpose tolerance is 8X the continuous current rating. Tolerance to 18X and 25X are also available.

Environmental, Vibration, and Shock Resistance: Mil-Spec qualification for fungus resistance, humidity, salt-spray resistance, and shock vibration resistance.

Integral Auxiliary Switch (Optional): One auxiliary switch contact (a or b) can be factory installed per protector pole. A separate pole for the contact is not required.

① One A or B contact maximum per pole. Contacts will be arranged left to right (e.g.,) BAB suffix on 3-pole breaker.
② Contact position when breaker in open condition. Contacts rated 10 amperes at 250 Vac.
③ UL recognized to 250 Vac, 5 kA above 30 amperes.
④ Maximum of 40 amperes available at 25X inrush.

Catalog Numbering System

S P H M 3 H M 0 0 3 0 _ _ _ _

Type

Supplementary Protector Hydraulic Magnetic

Poles

Code	Poles
1	1-Pole
2	2-Pole
3	3-Pole
4	4-Pole

Inrush

Code	Delay	Voltage
H	8X	50/60 Hz
R	18X	50/60 Hz
Y④	25X	50/60 Hz
J	8X	Dc
S	18X	Dc
Z④	25X	Dc
S	Switch	Dc, 50/60 Hz

Delay

Code	Delay	Curve
M	Medium	2
S	Short	3
L	Long	10
M	Medium	20
S	Short	30
L	Long	251
M	Medium	252
S	Short	253
M	Medium	2
S	Short	3
L	Long	10
M	Medium	20
S	Short	30
L	Long	251
M	Medium	252
S	Short	253
W	Switch	–

Current Rating

Code	Current③
00R1	0.10 Ampere
0R25	0.25 Ampere
0R50	0.50 Ampere
0R75	0.75 Ampere
0001	1 Ampere
02R5	2.5 Ampere
0005	5 Ampere
07R5	7.5 Ampere
0010	10 Ampere
0015	15 Ampere
0020	20 Ampere
0025	25 Ampere
0030	30 Ampere
0035③	35 Ampere
0040③	40 Ampere
0050③	50 Ampere

Auxiliary Switch

Code	Current
A①	Normally Open②
B①	Normally Closed②

General Specifications and Electrical Ratings

Standards and Approvals	Continuous Current Rating	Vac 50/60 Hz	Vdc	Interruption Cap Capacity RMS Symmetrical
UL 1077	0.1 to 30 Amperes	277/480		3 kA
	0.1 to 50 Amperes	250		5 kA
CSA 22.2	0.1 to 50 Amperes		80	5 kA
VDE 0660	0.1 to 50 Amperes	230/400		1.5 kA
IEC-380	0.1 to 50 Amperes		80	2 kA

Standards: UL Recognized under UL 1077, CSA Certified to CSA 22.2. Meets the requirements of IEC-380, IEC-435, IEC-601, VDE 0660, VDE 601, VDE 0730, VDE 0750, VDE 0804, VDE 0806

Inrush Tolerance: 8X (Standard), 18X, or 25X

Overcurrent Curves: Long Delay, Medium Delay, or Short Delay

Operating Temperature: -40 to +85°C

Wire Range: Breaker Terminals: 14-6 AWG Copper, 35-inch-lbs torque Auxiliary Switch Terminals: 16 AWG Copper, 3.5-inch-lbs torque

Auxiliary Switch: 10 Amperes at 250 Vac

Degree of Protection: IP-20

Supplementary Protectors Hydraulic Magnetic Type Cable-in/Cable-out DIN Rail

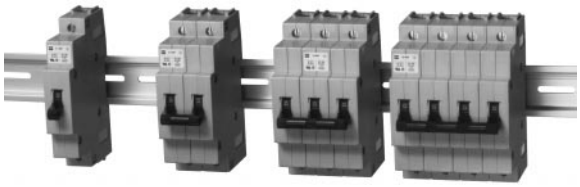

1-Pole *2-Pole* *3-Pole* *4-Pole*

SPHM Catalog Numbers

Continuous Current Rating (Amperes)	Catalog Number			
	8X (Standard Inrush Tolerance) Medium Delay Curve 2			
	1-Pole 277 Vac	2-Pole 277/480 Vac	3-Pole 277/480 Vac	4-Pole 277/480 Vac
0.1	SPHM1HM00R1Ⓢ	SPHM2HM00R1Ⓢ	SPHM3HM00R1Ⓞ	SPHM4HM00R1Ⓞ
0.25	SPHM1HM0R25Ⓢ	SPHM2HM0R25Ⓢ	SPHM3HM0R25Ⓞ	SPHM4HM0R25Ⓞ
0.50	SPHM1HM0R50Ⓢ	SPHM2HM0R50Ⓢ	SPHM3HM0R50Ⓞ	SPHM4HM0R50Ⓞ
0.75	SPHM1HM0R75Ⓢ	SPHM2HM0R75Ⓢ	SPHM3HM0R75Ⓞ	SPHM4HM0R75Ⓞ
1	SPHM1HM0001Ⓢ	SPHM2HM0001Ⓢ	SPHM3HM0001Ⓞ	SPHM4HM0001Ⓞ
2.5	SPHM1HM02R5Ⓢ	SPHM2HM02R5Ⓢ	SPHM3HM02R5Ⓞ	SPHM4HM02R5Ⓞ
5.0	SPHM1HM0005Ⓢ	SPHM2HM0005Ⓢ	SPHM3HM0005Ⓢ	SPHM4HM0005Ⓢ
7.5	SPHM1HM07R5Ⓢ	SPHM2HM07R5Ⓢ	SPHM3HM07R5Ⓢ	SPHM4HM07R5Ⓢ
10	SPHM1HM0010Ⓢ	SPHM2HM0010Ⓢ	SPHM3HM0010Ⓢ	SPHM4HM0010Ⓢ
15	SPHM1HM0015Ⓢ	SPHM2HM0015Ⓢ	SPHM3HM0015Ⓢ	SPHM4HM0015Ⓢ
20	SPHM1HM0020Ⓢ	SPHM2HM0020Ⓢ	SPHM3HM0020Ⓢ	SPHM4HM0020Ⓢ
25	SPHM1HM0025Ⓢ	SPHM2HM0025Ⓢ	SPHM3HM0025Ⓢ	SPHM4HM0025Ⓢ
30	SPHM1HM0030Ⓢ	SPHM2HM0030Ⓢ	SPHM3HM0030Ⓢ	SPHM4HM0030Ⓢ
Continuous Current Rating (Amperes)	8X (Standard Inrush Tolerance) Medium Delay Curve 2			
	1-Pole 250 Vac	2-Pole 250 Vac	3-Pole 250 Vac	4-Pole 250 Vac
35	SPHM1HM0035Ⓢ	SPHM2HM0035Ⓢ	SPHM3HM0035Ⓢ	SPHM4HM0035Ⓢ
40	SPHM1HM0040Ⓢ	SPHM2HM0040Ⓢ	SPHM3HM0040Ⓢ	SPHM4HM0040Ⓢ
50	SPHM1HM0050Ⓢ	SPHM2HM0050Ⓢ	SPHM3HM0050Ⓢ	SPHM4HM0050Ⓢ
Continuous Current Rating (Amperes)	18X (High Inrush Tolerance) Medium Delay Curve 20			
	1-Pole 277 Vac	2-Pole 277/480 Vac	3-Pole 277/480 Vac	4-Pole 277/480 Vac
0.1	SPHM1RM00R1Ⓢ	SPHM2RM00R1Ⓢ	SPHM3RM00R1Ⓞ	SPHM4RM00R1Ⓞ
0.25	SPHM1RM0R25Ⓢ	SPHM2RM0R25Ⓢ	SPHM3RM0R25Ⓞ	SPHM4RM0R25Ⓞ
0.50	SPHM1RM0R50Ⓢ	SPHM2RM0R50Ⓢ	SPHM3RM0R50Ⓞ	SPHM4RM0R50Ⓞ
0.75	SPHM1RM0R75Ⓢ	SPHM2RM0R75Ⓢ	SPHM3RM0R75Ⓞ	SPHM4RM0R75Ⓞ
1	SPHM1RM0001Ⓢ	SPHM2RM0001Ⓢ	SPHM3RM0001Ⓞ	SPHM4RM0001Ⓞ
2.5	SPHM1RM02R5Ⓢ	SPHM2RM02R5Ⓢ	SPHM3RM02R5Ⓞ	SPHM4RM02R5Ⓞ
5	SPHM1RM0005Ⓢ	SPHM2RM0005Ⓢ	SPHM3RM0005Ⓢ	SPHM4RM0005Ⓢ
7.5	SPHM1RM07R5Ⓢ	SPHM2RM07R5Ⓢ	SPHM3RM07R5Ⓢ	SPHM4RM07R5Ⓢ
10	SPHM1RM0010Ⓢ	SPHM2RM0010Ⓢ	SPHM3RM0010Ⓢ	SPHM4RM0010Ⓢ
15	SPHM1RM0015Ⓢ	SPHM2RM0015Ⓢ	SPHM3RM0015Ⓢ	SPHM4RM0015Ⓢ
20	SPHM1RM0020Ⓢ	SPHM2RM0020Ⓢ	SPHM3RM0020Ⓢ	SPHM4RM0020Ⓢ
25	SPHM1RM0025Ⓢ	SPHM2RM0025Ⓢ	SPHM3RM0025Ⓢ	SPHM4RM0025Ⓢ
30	SPHM1RM0030Ⓢ	SPHM2RM0030Ⓢ	SPHM3RM0030Ⓢ	SPHM4RM0030Ⓢ
Continuous Current Rating (Amperes)	18X (High Inrush Tolerance) Medium Delay Curve 20			
	1-Pole 250 Vac	2-Pole 250 Vac	3-Pole 250 Vac	4-Pole 250 Vac
35	SPHM1RM0035Ⓢ	SPHM2RM0035Ⓢ	SPHM3RM0035Ⓢ	SPHM4RM0035Ⓢ
40	SPHM1RM0040Ⓢ	SPHM2RM0040Ⓢ	SPHM3RM0040Ⓢ	SPHM4RM0040Ⓢ
50	SPHM1RM0050Ⓢ	SPHM2RM0050Ⓢ	SPHM3RM0050Ⓢ	SPHM4RM0050Ⓢ

Shipping Data

	Shipped in Cartons of:	Carton Dimensions Inches (mm)	Approx. Weight Lbs. (Kgs)
1-Pole Units	12	10.500 (266.70) x 4.125 (104.78) x 4.500 (114.30)	15.000 (6.81)
2-Pole Units	6	10.500 (266.70) x 4.125 (104.78) x 4.500 (114.30)	15.000 (6.81)
3-Pole Units	4	10.500 (266.70) x 4.125 (104.78) x 4.500 (114.30)	15.000 (6.81)
4-Pole Units	3	10.500 (266.70) x 4.125 (104.78) x 4.500 (114.30)	15.000 (6.81)

Ⓢ Normally stocked.
Ⓞ Special order, contact Cutler-Hammer. Minimum quantities apply. Contact Cutler-Hammer for price and availability for 400 Hz, Dc, Auxiliary Switch, and other catalog number combinations not shown.

- All two- and three-pole circuit breakers are of the common trip type. On all 3-phase Delta (240V) Grounded B phase applications, refer to Cutler-Hammer.
- Single-pole circuit breakers, 15 and 20 amperes. Switching duty rated (SWD) for fluorescent lighting applications.
- All G-frame circuit breakers are suitable for reverse feed use.
- HACR rated.

Interrupting Capacity Ratings

UL489 Interrupting Capacity Ratings

Circuit Breaker Type	Number of Poles	Interrupting Capacity (Symmetrical Amperes) (kA)						Page Number
		Volts Ac (50/60 Hz)				Volts Dc		
		120	240	277	480	125	250①②	
GD	3	–	65	–	22	–	10	26

Circuit Breaker Type	Number of Poles	Interrupting Capacity (Symmetrical Amperes) (kA)						Page Number
		Volts Ac (50/60 Hz)				Volts Dc		
		120	240	277	480Y/277	125	125/250	
GB	1	65	–	–	–	14③	–	27
	2, 3	–	65	–	–	–	14	27
GHB	1	65	–	14	–	14③	–	27
	2, 3	–	65	–	14	–	14	27
GC	1	65	–	–	–	14③	–	28
	2, 3	–	65	–	–	–	14	28
GHC	1	65	–	14	–	14③	–	28
	2, 3	–	65	–	14	–	14	28

Catalog Numbering System

This information is presented only as an aid to understanding catalog numbers. It is not to be used to build catalog numbers for circuit breakers or trip units.

Circuit Breaker/Frame Catalog Number

GD 3 100

Circuit Breaker Type	Number of Poles	Trip Amperes	Suffix
GD	1: 1 Pole	15	K: Molded Case Switch
GB	2: 2 Pole	20	D: Ring Type Terminals
GHB	3: 3 Pole	24	C: Steel Collars
GC		30	V: 50°C
GHC		35	J01: Fungus Proofed
		40	R01: Shock Tested
		45	F01: Freeze Tested
		50	
		60	
		70	
		80	
		90	
		100	

Terminal Types

For line and load-side. Terminals are UL listed as suitable for wire type and size given below.

Circuit Breaker Amperes	Terminal Type Material	Screw Head Type	Wire Type	AWG Wire Range	Metric Wire④ Range (mm^2)
Standard					
15-20	Clamp (Plated Steel)	Slotted	Cu/Al	#14-10	2.5-4
25-100	Pressure (Aluminum Body)	Slotted	Cu/Al	#10-1/0	4-50
Optional					
15-50	Pressure (Steel Body)	Slotted	Cu	–	–

① Two poles of 3-pole circuit breaker.
② Time constant is 8 milliseconds minimum.
③ 15 through 70A breakers only.
④ Not UL listed sizes.

Typical Series C G-Frame Circuit Breaker

Type GD Thermal-Magnetic Circuit Breakers with Non-Interchangeable Trip-Units

Maximum Continuous Ampere Rating @ 40°C	480 Vac Maximum, 250 Vdc①	Catalog Number (Includes binding head screws)
	22 kAIC @ 480 Vac	
	Catalog Number (Includes Line and Load Terminals)	
3-Pole		
15	GD3015	GD3015D
20	GD3020	GD3020D
25	GD3025	GD3025D
30	GD3030	GD3030D
35	GD3035	GD3035D
40	GD3040	GD3040D
45	GD3045	GD3045D
50	GD3050	GD3050D
60	GD3060	GD3060D
70	GD3070	GD3070D
80	GD3080	GD3080D
90	GD3090	GD3090D
100	GD3100	GD3100D

Instruction Leaflet/FRED Number 29C102

Molded Case Switches

Maximum Continuous Ampere Rating @ 40°C	480 Vac Maximum, 250 Vdc
	Catalog Number (Includes Line and Load Terminals)
3-Pole	
60	GD3060K
100	GD3100K

Instruction Leaflet/FRED Number 29C102

Types GB and GHB Bolt-On Panelboard Circuit Breakers

Typical GB

These breakers meet the requirements of Federal Specification W-C-375b as follows:

Types GB, GHB, 120 and 240 Volts:
1 Pole: Class 11a.
2, 3 Poles: Classes 10b, 11b, 12b, 14b, 15b

Type GHB, 277 and 480Y/277 Volts:
1 Pole: Classes 12c, 13a
2, 3 Poles: Class 13b

Type GB Thermal-Magnetic Circuit Breakers with Non-Interchangeable Trip Units

Continuous Ampere Rating @ 40°C	120 Vac Maximum, 125 Vdc Maximum①	240 Vac Maximum, 125/250 Vdc Maximum	240 Vac Maximum, 125/250 Vdc Maximum②
	1-Pole	2-Pole	3-Pole
	Catalog Number		
15	GB1015③	GB2015③	GB3015③
20	GB1020③	GB2020③	GB3020③
25	GB1025	GB2025	GB3025
30	GB1030	GB2030	GB3030
35	GB1035	GB2035	GB3035
40	GB1040	GB2040	GB3040
45	GB1045	GB2045	GB3045
50	GB1050	GB2050	GB3050
60	GB1060	GB2060	GB3060
70	GB1070	GB2070	GB3070
80	GB1080	GB2080	GB3080
90	GB1090	GB2090	GB3090
100	GB1100	GB2100	GB3100

Type GHB Thermal-Magnetic Circuit Breakers with Non-Interchangeable Trip Units④

Continuous Ampere Rating @ 40°C	277/480 Vac Maximum, 125 Vdc Maximum①	277/480 Vac Maximum, 125/250 Vdc Maximum	277/480 Vac Maximum, 125/250 Vdc Maximum②
	1-Pole	2-Pole	3-Pole
	Catalog Number		
15	GHB1015③	GHB2015③	GHB3015③
20	GHB1020③	GHB2020③	GHB3020③
25	GHB1025	GHB2025	GHB3025
30	GHB1030	GHB2030	GHB3030
35	GHB1035	GHB2035	GHB3035
40	GHB1040	GHB2040	GHB3040
45	GHB1045	GHB2045	GHB3045
50	GHB1050	GHB2050	GHB3050
60	GHB1060	GHB2060	GHB3060
70	GHB1070	GHB2070	GHB3070
80	GHB1080	GHB2080	GHB3080
90	GHB1090	GHB2090	GHB3090
100	GHB1100	GHB2100	GHB3100

Instruction Leaflet/FRED Number 15547

Type GHBGFEP Bolt-on Panelboard 30mA Industrial Ground Fault Circuit Protectors

15-60 Amperes, 277 Volt, 50/60 Hz

Single Phase (Requires 2 Poles)

These circuit breakers meet the requirements of UL489 and UL1053.

Operational voltage 240V to 305V.

Interrupting Capacity Ratings

Circuit Breaker Type	Number of Poles	Interrupting Capacity (Symmetrical Amperes)
		277 Volts Ac (50/60 Hz)
GHBGFEP	2	14,000

Type GHBGFEP Bolt-on Panelboard 30mA Industrial Ground Fault Circuit Protectors with Non-Interchangeable Trip Units

Continuous Ampere Rating @ 40°C	One Phase (Requires 2 Poles) 277V, 30mA
	Catalog Number
15	GHBGFEP1015
20	GHBGFEP1020
30	GHBGFEP1030
40	GHBGFEP1040
50	GHBGFEP1050
60	GHBGFEP1060

Instruction Leaflet/FRED Number 29C193

① 15 through 70 ampere circuit breakers only.
② Use (2) outside poles.
③ Uses .190-32 screw type clamp terminals.
④ 480Y/277V, circuit breakers (Type GHB) not suitable for 3-phase Delta (480V).

Types GC and GHC Circuit Breakers

15-100 Amperes, 120, 240, 277, 480Y/277V, 50/60 Hz, 125, 125/250 Vdc, 1, 2, and 3 Poles

Typical GC

These breakers meet the requirements of Federal Specification W-C-37b as follows:

Types GC, 120 and 240 Volts:
1 Pole: Class 11a
2, 3 Poles: Classes 10b, 11b, 12b, 14b, 15b

Type GHC, 277 and 480Y/277 Volts:
1 Pole: Classes 12c, 13a
2, 3 Poles: Class 13b

Type GC Thermal-Magnetic Circuit Breakers with Non-Interchangeable Trip Units

Continuous Ampere Rating @ 40°C	240 Vac Maximum, 125 Vdc Maximum①	240 Vac Maximum, 125/250 Vdc Maximum	240 Vac Maximum, 125/250 Vdc Maximum②
	1-Pole	2-Pole	3-Pole
	Catalog Number		
15	GC1015③	GC2015③	GC3015③
20	GC1020③	GC2020③	GC3020③
25	GC1025	GC2025	GC3025
30	GC1030	GC2030	GC3030
35	GC1035	GC2035	GC3035
40	GC1040	GC2040	GC3040
45	GC1045	GC2045	GC3045
50	GC1050	GC2050	GC3050
60	GC1060	GC2060	GC3060
70	GC1070	GC2070	GC3070
80	GC1080	GC2080	GC3080
90	GC1090	GC2090	GC3090
100	GC1100	GC2100	GC3100

Type GHC Thermal-Magnetic Circuit Breakers with Non-Interchangeable Trip Units

Continuous Ampere Rating @ 40°C	277 Vac Maximum, 125 Vdc Maximum①	480Y/277 Vac Maximum, 125/250 Vdc Maximum	480Y/277 Vac Maximum, 125/250 Vdc Maximum②
	1-Pole	2-Pole	3-Pole
	Catalog Number		
15	GHC1015③	GHC2015③	GHC3015③
20	GHC1020③	GHC2020③	GHC3020③
25	GHC1025	GHC2025	GHC3025
30	GHC1030	GHC2030	GHC3030
35	GHC1035	GHC2035	GHC3035
40	GHC1040	GHC2040	GHC3040
45	GHC1045	GHC2045	GHC3045
50	GHC1050	GHC2050	GHC3050
60	GHC1060	GHC2060	GHC3060
70	GHC1070	GHC2070	GHC3070
80	GHC1080	GHC2080	GHC3080
90	GHC1090	GHC2090	GHC3090
100	GHC1100	GHC2100	GHC3100

Instruction Leaflet/FRED Number 15548

Type GHCGFEP Cable In/Cable Out 30mA Industrial Ground Fault Circuit Protectors

15-60 Amperes, 277 Volt, 50/60 Hz

Single Phase Requires 2 Poles)

These circuit breakers meet the requirements of UL489 and UL1053.

Operational voltage 240V to 305V.

Interrupting Capacity Ratings

Circuit Breaker Type	Number of Poles	Interrupting Capacity (Symmetrical Amperes)
		277 Volts Ac (50/60 Hz)
GHCGFEP	2	14,000

Type GHBGFEP Bolt-on Panelboard 30mA Industrial Ground Fault Circuit Protectors with Non-Interchangeable Trip Units

Continuous Ampere Rating @ 40°C	One Phase (Requires 2 Poles) 277V, 30mA
	Catalog Number
15	GHBGFEP1015
20	GHBGFEP1020
30	GHBGFEP1030
40	GHBGFEP1040
50	GHBGFEP1050
60	GHBGFEP1060

Instruction Leaflet/FRED Number 29C193

① 15 through 70 ampere circuit breakers only.
② Use (2) outside poles.
③ Uses .190-32 screw type clamp terminals.

Special Purpose Breakers

These are Types GC and GHC circuit breakers with binding head screw-type terminals on line and load side. These circuit breakers with screw-type terminals (.190-32) will be marked "Special purpose breaker not for general use." To order this special breaker, use the catalog number below.

Type GC Thermal-Magnetic Circuit Breakers with Non-Interchangeable Trip Units

Continuous Ampere Rating @ 40°C	120 Vac Maximum, 125 Vdc Maximum	240 Vac Maximum, 125/250 Vdc Maximum	240 Vac Maximum, 125/250 Vdc Maximum①
	1-Pole	2-Pole	3-Pole
	Catalog Number		
25	GC1025D	GC2025D	GC3025D
30	GC1030D	GC2030D	GC3030D
35	GC1035D	GC2035D	GC3035D
40	GC1040D	GC2040D	GC3040D
45	GC1045D	GC2045D	GC3045D
50	GC1050D	GC2050D	GC3050D
55	GC1055D	GC2055D	GC3055D
60	GC1060D	GC2060D	GC3060D

Type GHC Thermal-Magnetic Circuit Breakers with Non-Interchangeable Trip Units

Continuous Ampere Rating @ 40°C	277 Vac Maximum, 125 Vdc Maximum	480Y/277 Vac Maximum, 125/250 Vdc Maximum	480Y/277 Vac Maximum, 125/250 Vdc Maximum①
	1-Pole	2-Pole	3-Pole
	Catalog Number		
25	GHC1025D	GHC2025D	GHC3025D
30	GHC1030D	GHC2030D	GHC3030D
35	GHC1035D	GHC2035D	GHC3035D
40	GHC1040D	GHC2040D	GHC3040D
45	GHC1045D	GHC2045D	GHC3045D
50	GHC1050D	GHC2050D	GHC3050D
55	GHC1055D	GHC2055D	GHC3055D
60	GHC1060D	GHC2060D	GHC3060D

Instruction Leaflet/FRED Number 15548

① Use (2) outside poles.

Dimensions/Weights

Dimensions, Inches (mm)

Number of Poles	Width	Height	Depth
1	1.0 (25.33)	4.88 (123.95)	2.81 (71.41)
2	2.0 (50.78)	4.88 (123.95)	2.81 (71.41)
3	3.0 (76)	4.88 (123.95)	2.81 (71.41)

Approximate Shipping Weight, Lbs. (kg)

Breaker Type	Number of Poles		
	1	2	3
GD	1.0 (.454)	1.5 (.680)	2.25 (1.021)
GHBGFEP	–	1.2 (.545)	–
GHCGFEP	–	1.1 (.499)	–
GB/GHC	Carton Quantity		
	24	12	8
	16 (7.264)	16 (7.264)	16 (7.264)
GC/GHC	Carton Quantity		
	24	12	8
	18 (8.172)	18 (8.172)	18 (8.172)

Accessories

Internal

Alarm Switch 139
Auxiliary Switch. 142
Shunt Trip 147
Undervoltage Release Mechanism 153

External

Base Mounting Hardware 163
Base Mounting Plate 167
DIN Rail Adapter 167
Key Operated Attachment. 167
Lock Dog (non-padlockable) 168
Padlockable Handle 168
Handle Mechanisms 180

Typical Series C F-Frame Breaker

- All Series C F-frame circuit breakers are HACR rated.
- All circuit breakers 10 through 50 amperes are suitable for HID (high intensity discharge) use.
- All F-frame circuit breakers are suitable for reverse feed use.

Interrupting Capacity Ratings

UL489 Interrupting Capacity Ratings

Circuit Breaker Type	Number of Poles	Interrupting Capacity (Symmetrical Amperes) (kA)						Page Number
		Volts Ac (50/60 Hz)				Volts Dc①		
		240	277	480	600	125	250②③	
ED	2, 3	65	–	–	–	10	–	32
EDH	2, 3	100	–	–	–	10	–	32
EDC	2, 3	200	–	–	–	10	–	32
EHD	1	–	14	–	–	10	–	32
	2, 3	18	–	14	–	–	10	32
FDB	2, 3, 4	18	–	14	14	–	10	32
FD	1	–	25	–	–	10	–	32
	2, 3, 4	65	–	25	18	–	10	32
HFD	1	–	65	–	–	10	–	33
	2, 3, 4	100	–	65	25	–	22	33
FDC	2, 3, 4	200	–	100	35	–	22	33

IEC 157-1 (P1) Interrupting Capacity Ratings (P1)

Circuit Breaker Type	Number of Poles	Interrupting Capacity (Symmetrical Amperes) (kA)						Page Number
		Volts Ac (50/60 Hz)				Volts Dc①		
		220, 240	380, 415	440	500	125	250②③	
ED	2, 3	65	–	–	–	10	–	32
EDH	2, 3	100	–	–	–	10	–	32
EDC	2, 3	200	–	–	–	10	–	32
FDB	2, 3, 4	18	14	14	14	–	10	32
FD	1	25	–	–	–	10	–	32
	2, 3, 4	65	35	35	18	–	10	32
HFD	1	65	–	–	–	10	–	33
	2, 3, 4	100	65	65	25	–	22	33
FDC	2, 3, 4	200	100	100	35	–	22	33

① Dc ratings apply to substantially non-inductive circuits.
② 2-pole circuit breaker, or two poles of 3-pole circuit breaker.
③ Time constant is 3 milliseconds minimum at 10 kA and 8 milliseconds minimum at 22 kA.

Types ED, EDH, and EDC Thermal-Magnetic Circuit Breakers with Non-Interchangeable Trip Units Suitable for Reverse Feed

Maximum Continuous Ampere Rating @ 40°C	240 Vac Maximum, 125 Vdc					
	65 kAIC @ 240 Vac		100 kAIC @ 240 Vac		200 kAIC @ 240 Vac	
	Type ED		Type EDH		Type EDC Current Limiting	
	2-Pole	3-Pole	2-Pole	3-Pole	2-Pole	3-Pole
	Catalog Number (Includes Terminals on Load End Only)					
100	ED2100	ED3100	EDH2100	EDH3100	EDC2100	EDC3100
125	ED2125	ED3125	EDH2125	EDH3125	EDC2125	EDC3125
150	ED2150	ED3150	EDH2150	EDH3150	EDC2150	EDC3150
175	ED2175	ED3175	EDH2175	EDH3175	EDC2175	EDC3175
200	ED2200	ED3200	EDH2200	EDH3200	EDC2200	EDC3200
225	ED2225	ED3225	EDH2225	EDH3225	EDC2225	EDC3225

Instruction Leaflet/FRED Number 29C101

Type EHD Thermal-Magnetic Circuit Breakers with Non-Interchangeable Trip Units

Maximum Continuous Ampere Rating @ 40°C	277 Vac Maximum, 125 Vdc	480 Vac Maximum, 250 Vdc	
	14 kAIC @ 277 Vac	14 kAIC @ 480 Vac	
	Type EHD		
	1-Pole	2-Pole	3-Pole
	Catalog Number (Includes Terminals on Load End Only)		
10①	EHD1010	EHD2010	EHD3010
15	EHD1015②	EHD2015	EHD3015
20	EHD1020②	EHD2020	EHD3020
25	EHD1025	EHD2025	EHD3025
30	EHD1030	EHD2030	EHD3030
35	EHD1035	EHD2035	EHD3035
40	EHD1040	EHD2040	EHD3040
45	EHD1045	EHD2045	EHD3045
50	EHD1050	EHD2050	EHD3050
60	EHD1060	EHD2060	EHD3060
70	EHD1070	EHD2070	EHD3070
80	EHD1080	EHD2080	EHD3080
90	EHD1090	EHD2090	EHD3090
100	EHD1100	EHD2100	EHD3100

Instruction Leaflet/FRED Number 29C101

Type FD Thermal-Magnetic Circuit Breakers with Non-Interchangeable Trip Units

Maximum Continuous Ampere Rating @ 40°C	600 Vac Maximum, 250 Vdc			277 Vac Maximum, 125 Vdc	600 Vac Maximum, 250 Vdc		
	14 kAIC @ 600 Vac			25 kAIC @ 277 Vac	25 kAIC @ 480 Vac		
	Type FDB			Type FD			
	2-Pole	3-Pole	4-Pole	1-Pole	2-Pole	3-Pole	4-Pole
	Catalog Number (Includes Terminals on Load End Only)						
10①	FDB2010	FDB3010	FDB4010	FD1010	–	–	–
15	FDB2015	FDB3015	FDB4015	FD1015②	FD2015	FD3015	FD4015
20	FDB2020	FDB3020	FDB4020	FD1020②	FD2020	FD3020	FD4020
25	FDB2025	FDB3025	FDB4025	FD1025	FD2025	FD3025	FD4025
30	FDB2030	FDB3030	FDB4030	FD1030	FD2030	FD3030	FD4030
35	FDB2035	FDB3035	FDB4035	FD1035	FD2035	FD3035	FD4035
40	FDB2040	FDB3040	FDB4040	FD1040	FD2040	FD3040	FD4040
45	FDB2045	FDB3045	FDB4045	FD1045	FD2045	FD3045	FD4045
50	FDB2050	FDB3050	FDB4050	FD1050	FD2050	FD3050	FD4050
60	FDB2060	FDB3060	FDB4060	FD1060	FD2060	FD3060	FD4060
70	FDB2070	FDB3070	FDB4070	FD1070	FD2070	FD3070	FD4070
80	FDB2080	FDB3080	FDB4080	FD1080	FD2080	FD3080	FD4080
90	FDB2090	FDB3090	FDB4090	FD1090	FD2090	FD3090	FD4090
100	FDB2100	FDB3100	FDB4100	FD1100	FD2100	FD3100	FD4100
110	FDB2110	FDB3110	FDB4110	FD1110	FD2110	FD3110	FD4110
125	FDB2125	FDB3125	FDB4125	FD1125	FD2125	FD3125	FD4125
150	FDB2150	FDB3150	FDB4150	FD1150	FD2150	FD3150	FD4150
175	–	–	–	–	FD2175	FD3175	FD4175
200	–	–	–	–	FD2200	FD3200	FD4200
225	–	–	–	–	FD2225	FD3225	FD4225

Instruction Leaflet/FRED Number 29C101

① Not UL listed. 5 kAIC interrupting rating.
② UL listed for SWD applications, see NEC Article 240-83 (d).

Types HFD and FDC Thermal-Magnetic Circuit Breakers with Non-Interchangeable Trip Units

Maximum Continuous Ampere Rating @ 40°C	600 Vac Maximum, 250 Vdc	277 Vac Maximum, 125 Vdc			600 Vac Maximum, 250 Vdc		
	65 kAIC @ 277 Vac	65 kAIC @ 480 Vac			100 kAIC @ 480 Vac		
	Type HFD				Type FDC Current Limiting		
	1-Pole	2-Pole	3-Pole	4-Pole	2-Pole	3-Pole	4-Pole
	Catalog Number (Includes Terminals on Load End Only)						
15	HFD1015	HFD2015	HFD3015	HFD4015	FDC2015	FDC3015	FDC4015
20	HFD1020	HFD2020	HFD3020	HFD4020	FDC2020	FDC3020	FDC4020
25	HFD1025	HFD2025	HFD3025	HFD4025	FDC2025	FDC3025	FDC4025
30	HFD1030	HFD2030	HFD3030	HFD4030	FDC2030	FDC3030	FDC4030
35	HFD1035	HFD2035	HFD3035	HFD4035	FDC2035	FDC3035	FDC4035
40	HFD1040	HFD2040	HFD3040	HFD4040	FDC2040	FDC3040	FDC4040
45	HFD1045	HFD2045	HFD3045	HFD4045	FDC2045	FDC3045	FDC4045
50	HFD1050	HFD2050	HFD3050	HFD4050	FDC2050	FDC3050	FDC4050
60	HFD1060	HFD2060	HFD3060	HFD4060	FDC2060	FDC3060	FDC4060
70	HFD1070	HFD2070	HFD3070	HFD4070	FDC2070	FDC3070	FDC4070
80	HFD1080	HFD2080	HFD3080	HFD4080	FDC2080	FDC3080	FDC4080
90	HFD1090	HFD2090	HFD3090	HFD4090	FDC2090	FDC3090	FDC4090
100	HFD1100	HFD2100	HFD3100	HFD4100	FDC2100	FDC3100	FDC4100
110	HFD1110	HFD2110	HFD3110	HFD4110	FDC2110	FDC3110	FDC4110
125	HFD1125	HFD2125	HFD3125	HFD4125	FDC2125	FDC3125	FDC4125
150	HFD1150	HFD2150	HFD3150	HFD4150	FDC2150	FDC3150	FDC4150
175	–	HFD2175	HFD3175	HFD4175	FDC2175	FDC3175	FDC4175
200	–	HFD2200	HFD3200	HFD4200	FDC2200	FDC3200	FDC4200
225	–	HFD2225	HFD3225	HFD4225	FDC2225	FDC3225	FDC4225

Instruction Leaflet/FRED Number 29C101

Molded Case Switches

Molded case switches are used as compact switches in applications requiring high current switching capabilities. Molded case switches are constructed of circuit breaker components and are of the high instantaneous automatic type. Molded case switches are listed in accordance with Underwriters Laboratories, Inc., Standard UL 1087.

Maximum Continuous Ampere Rating @ 40°C	480 Vac Maximum, 250 Vdc	600 Vac Maximum, 250 Vdc
	Complete Circuit Breaker with Load Side Terminals Only	Complete Circuit Breaker with Load Side Terminals Only
	Catalog Number	
2-Pole		
100	EHD2100K	FD2100K
150	–	FD2150K
225	–	FD2225K
3-Pole		
100	EHD3100K	FD3100K
150	–	FD3150K
225	–	FD3225K
4-Pole		
100	–	FD4100K
150	–	FD4150K
225	–	FD4225K

Note: Molded Case Switches may open above 1800 amperes.

Instruction Leaflet/FRED Number 29C101

Line and Load Terminals

Line and load terminals provide wire connecting capabilities for specific ranges of continuous current ratings and wire types. Except as noted, terminals comply with Underwriters Laboratories, Inc., Standards UL486A and UL486B. Unless otherwise specified, F-frame circuit breakers are factory equipped with load terminals only.

Ordering Information

F-frame circuit breakers and molded case switches have load terminals only as standard equipment. When standard line-end terminals (same as standard load-end terminals) are required, add suffix L to the circuit breaker catalog number. When non-standard or optional line and/or load terminals are required, order by style number. Specify if factory installation is required.

Line and Load Terminals

Maximum Breaker Amperes	Terminal Body Material	Wire Type	AWG Wire Range	Metric Wire Range mm^2	Package of 3 Terminals Catalog Number
Standard Pressure Type Terminals					
20 (EHD)	Steel	Cu/Al	#14-#10	2.5-4	**3T20FB①**
100	Steel	Cu/Al	#14-1/0	2.5-50	**3T100FB**
225	Aluminum	Cu/Al	#14-4/0	25-95	**3TA225FD**
Optional Pressure Terminals					
50	Aluminum	Cu/Al	#14-#4	2.5-16	**3TA50FB①**
100	Aluminum	Cu/Al	#14-1/0	2.5-50	**3TA100FD**
200	Stainless Steel	Cu	#4-4/0	25-95	**3T150FB**
225	Aluminum	Cu/Al	#6-300 kcmil	16-150	**3TA225FDK②**

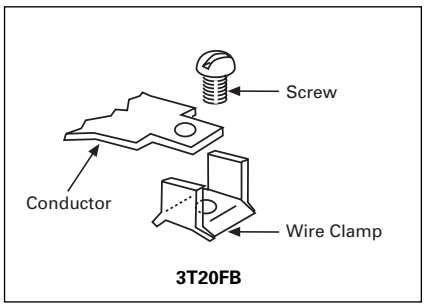

3T20FB

Assemble wire clamp to bottom of conductor as shown.

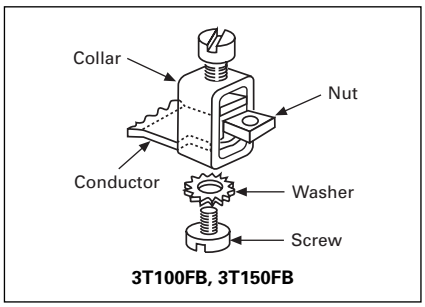

3T100FB, 3T150FB

Insert collar enclosing conductor as shown. Locate nut on top of conductor and tighten securely with screw and washer. Caution: Collar must surround conductor.

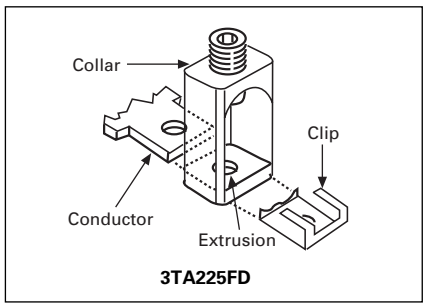

3TA225FD

Insert collar enclosing conductor and center on extrusion on collar. Install clip with legs on top of conductor and snap end around bottom of collar.

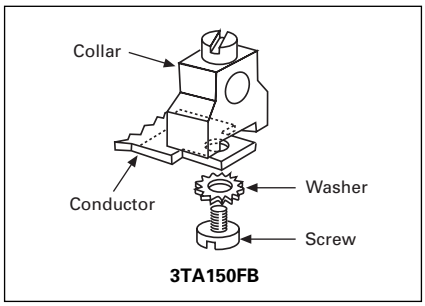

3TA150FB

Assemble collar on top of conductor as shown. Tighten securely with screw and washer.

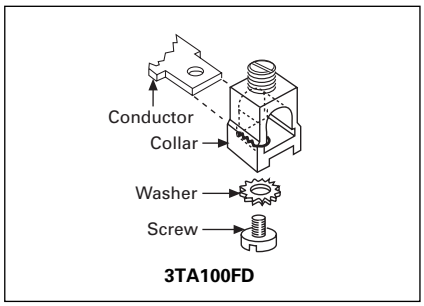

3TA100FD

Collar slides onto conductor and is held in position by a screw and lockwasher.

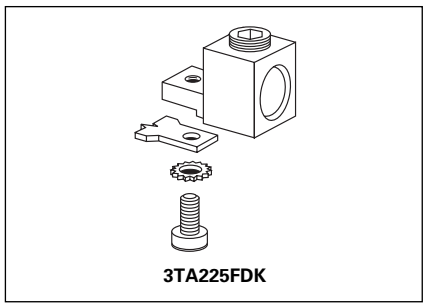

3TA225FDK

Assemble collar on top of conductor as shown. Tighten securely with screw and washer. Terminal shield must be used with this collar.

① Not for use with ED, EDH, EDC breakers.
② Includes terminal shield kit. Adds approximately 3 inches to breaker height. Available for use on 3-pole breaker only.

Catalog Numbering System

This information is presented only as an aid to understanding catalog numbers. It is not to be used to build catalog numbers for circuit breakers or trip units.

Circuit Breaker Catalog Number

FDC 3 100 L

Circuit Breaker Type	Number of Poles	Trip Amperes	Suffix
EHD	1: 1 Pole	10	E: 100% Protected (4-Pole only) Neutral Pole
FDB	2: 2 Poles	15	EH: 50% Protected (4-Pole only)
FD	3: 3 Poles	20	K: High Magnetic Molded Case Switch
HFD	4: 4 Poles	25	
FDC		30	L: Line and Load Terminals
		35	S: Stainless Steel Terminals
		40	V: 50˚C Calibration
		45	W: Without Terminals
		50	Y: Line Terminals Only
		60	Z: Aluminum Terminals (≤ 100 Amperes)
		70	
		80	
		90	
		100	
		110	
		125	
		150	
		175 (FD, HFD, FDC, 2-, 3-, 4-Pole Only)	
		200 (FD, HFD, FDC, 2-, 3-, 4-Pole Only)	
		225 (FD, HFD, FDC, 2-, 3-, 4-Pole Only)	

EDC 3 200 L

Circuit Breaker Type	Number of Poles	Trip Amperes	Suffix
ED	2: 2 Poles	100	L: Line and Load Terminals
EDH	3: 3 Poles	125	W: Without Terminals
EDC		150	Y: Line Terminals Only
		175	Z: Aluminum Terminals (100 Amperes)
		200	
		225	

Dimensions/Weights

Dimensions, Inches (mm)

Number of Poles	Width	Height	Depth
1	1.375 (35)	6 (152)	3.375 (86)
2	2.75 (70)	6 (152)	3.375 (86)
3	4.125 (105)	6 (152)	3.375 (86)
4	5.5 (140)	6 (152)	3.375 (86)

Approximate Shipping Weight, Lbs. (kg)

Breaker Type	Number of Poles			
	1	2	3	4
ED, EDH, EDC	–	3 (1.361)	4.5 (2.041)	–
EHD, FDB, FD, HFD, FDC	2 (.907)	3 (1.361)	4.5 (2.041)	6 (2.721)

Allowable Accessory Combinations

Different combinations of accessories can be supplied, depending on the types of accessories and the number of poles in the circuit breaker.

	Reference Page	1-Pole		2-Pole			3-Pole				4-Pole			
		Center		Left	Right		Left	Center	Right		Left	Center	Right	Neu.
Internal Accessories														
Alarm Lockout Switch (Make Only)	139	■												
Alarm Lockout (Make/Break)	139				■		❑		❑		■			
Alarm Lockout (2Make/2Break)	139				■		❑		❑		■			
Auxiliary Switch (1A, 1B)	142				■		■		■		■			■
Auxiliary Switch (2A, 2B)	142				■		■		■		■			■
Auxiliary Switch and Alarm Switch Combination	145				■		❑		❑		■			
Shunt Trip – Standard	148				■		■		■		■			■
Shunt Trip – Low Energy	152				■		■		■		■			
Undervoltage Release Mechanism	154				■		■		■		■			
External Accessories														
End Cap Kit	161			●			●				●			
Keeper Nut	161	●		●			●				●			
Control Wire Terminal Kit	162	●		●			●				●			
Multiwire Connectors	162	●		●			●				●			
Base Mounting Hardware	163	●		●			●				●			
Terminal Shields	165	●		●			●				●			
Terminal End Covers	166						●							
Interphase Barriers	166			●			●				●			
Non-Padlockable Handle Block	168	■		■				■				■		
Snap-on Padlockable Handle Lock Hasp	168	■		■				■				■		
Padlockable Handle Lock Hasp	169				■		❑		❑		❑		❑	
Cylinder Lock	169						■							
Key Interlock Kit	170				■		❑		❑		❑		❑	
Sliding Bar Interlock – Requires Two Breakers	171						●							
Walking Beam Interlock – Requires Two Breakers	171						●				●			
Electrical (Solenoid) Operator	172						●				●			
Plug-in Adapters	174			●			●				●			
Rear Connecting Studs	175	●		●			●				●			
Panelboard Connecting Straps	177	●		●			●				●			
Handle Mechanisms	178						●							
Door Hardware/Accessories	182						●				●			
LFD Current Limiter	183						●							
IQ Energy Sentinel	184			●			●							
Modifications (Refer to Cutler-Hammer)														
Special Calibration	186	●		●			●				●			
Moisture Fungus Treatment	186	●		●			●				●			
Freeze-Tested Circuit Breakers	186	●		●			●				●			
Marine Application	186	●		●			●				●			

■ Applicable in indicated pole position

❑ May be mounted on left or right pole – not both

● Accessory available/Modification available

Typical Series C J-Frame Circuit Breaker

- All Series C J-frame Circuit Breakers are HACR rated.
- J-frame circuit breakers are available as individual components (Frame, Trip Unit, Terminals), or factory assembled complete breakers.
- J-frame circuit breakers with non-interchangeable trip units are suitable for reverse feed use.

Interrupting Capacity Ratings

UL489 Interrupting Capacity Ratings

Circuit Breaker Type	Number of Poles	Interrupting Capacity (Symmetrical Amperes) (kA)						Page Number
		Volts Ac (50/60 Hz)				Volts Dc		
		240	480	600	125	250①②	500③	
JDB	2, 3	65	35	18	–	10	–	39
JD	2, 3, 4	65	35	18	–	10	–	38
HJD	2, 3, 4	100	65	25	–	22	–	38
JDC	2, 3, 4	200	100	35	–	22	–	38

IEC 157-1 (P1) Interrupting Capacity Ratings

Circuit Breaker Type	Number of Poles	Interrupting Capacity (Symmetrical Amperes) (kA)						Page Number
		Volts Ac (50/60 Hz)					Volts Dc	
		240	380	415	600	125	250①②	
JD	2, 3, 4	65	35	35	–	–	10	38
HJD	2, 3, 4	100	65	65	–	–	22	38
JDC	2, 3, 4	200	100	100	–	–	22	38

① 2-pole circuit breaker or two outside poles of 3-pole circuit breaker.
② Time constant is 3 milliseconds minimum at 10 kA and 8 milliseconds minimum at 22 kA.
③ 8 milliseconds time constant.

Types JD, HJD, and JDC Thermal-Magnetic Circuit Breakers with Interchangeable Trip Units

Maximum Continuous Ampere Rating @ 40°C	Standard Interrupting Capacity 600 Vac Rated 25 kAIC @ 480 Vac		High Interrupting Capacity 600 Vac Rated 65 kAIC @ 480 Vac		Ultra High Interrupting Capacity Current Limiting 600 Vac Rated 100 kAIC @ 480 Vac		Thermal Magnetic Trip Unit Only For Use With: Standard or High or Ultra High Interrupting Frames	Standard Terminals Only See Page 40 for Optional Terminals
	Factory Assembled Circuit Consisting of Frame, Trip Unit, and Terminals	Frame Only	Factory Assembled Circuit Consisting of Frame, Trip Unit, and Terminals	Frame Only	Factory Assembled Circuit Consisting of Frame, Trip Unit, and Terminals	Frame Only		
	Catalog Number							
2-Pole								
70	JD2070	JD2250F	HJD2070	HJD2250F	JDC2070	JDC2250F	JT2070T	TA250KB①
90	JD2090		HJD2090		JDC2090		JT2090T	
100	JD2100		HJD2100		JDC2100		JT2100T	
125	JD2125		HJD2125		JDC2125		JT2125T	
150	JD2150		HJD2150		JDC2150		JT2150T	
175	JD2175		HJD2175		JDC2175		JT2175T	
200	JD2200		HJD2200		JDC2200		JT2200T	
225	JD2225		HJD2225		JDC2225		JT2225T	
250	JD2250		HJD2250		JDC2250		JT2250T	
3-Pole								
70	JD3070	JD3250F	HJD3070	HJD3250F	JDC3070	JDC3250F	JT3070T	TA250KB①
90	JD3090		HJD3090		JDC3090		JT3090T	
100	JD3100		HJD3100		JDC3100		JT3100T	
125	JD3125		HJD3125		JDC3125		JT3125T	
150	JD3150		HJD3150		JDC3150		JT3150T	
175	JD3175		HJD3175		JDC3175		JT3175T	
200	JD3200		HJD3200		JDC3200		JT3200T	
225	JD3225		HJD3225		JDC3225		JT3225T	
250	JD3250		HJD3250		JDC3250		JT3250T	
4-Pole②③								
70	JD4070	JD4250F	HJD4070	HJD4250F	JDC4070	JDC4250F	JT4070T	TA250KB①
90	JD4090		HJD4090		JDC4090		JT4090T	
100	JD4100		HJD4100		JDC4100		JT4100T	
125	JD4125		HJD4125		JDC4125		JT4125T	
150	JD4150		HJD4150		JDC4150		JT4150T	
175	JD4175		HJD4175		JDC4175		JT4175T	
200	JD4200		HJD4200		JDC4200		JT4200T	
225	JD4225		HJD4225		JDC4225		JT4225T	
250	JD4250		HJD4250		JDC4250		JT4250T	

Instruction Leaflet/FRED Number 29C103 for Breaker; 29C600 for Thermal Magnetic Trip Unit

① Individually packed.
② Fully rated neutral pole with no protection.
③ Neutral is in right pole.

Type JDB Thermal-Magnetic Circuit Breakers with Non-Interchangeable Thermal-Magnetic Trip Units

Maximum Continuous Ampere Rating @ 40°C	600 Vac Rated, 250 Vdc	
	Complete Circuit Breaker	
	Without Line and Load Terminals	With Standard Line and Load Terminals Only
	Catalog Number	
2-Pole		
70	JDB2070W	JDB2070
90	JDB2090W	JDB2090
100	JDB2100W	JDB2100
125	JDB2125W	JDB2125
150	JDB2150W	JDB2150
175	JDB2175W	JDB2175
200	JDB2200W	JDB2200
225	JDB2225W	JDB2225
250	JDB2250W	JDB2250
3-Pole		
70	JDB3070W	JDB3070
90	JDB3090W	JDB3090
100	JDB3100W	JDB3100
125	JDB3125W	JDB3125
150	JDB3150W	JDB3150
175	JDB3175W	JDB3175
200	JDB3200W	JDB3200
225	JDB3225W	JDB3225
250	JDB3250W	JDB3250

Instruction Leaflet/FRED Number 29C103 for Breaker

Molded Case Switches

Molded case switches are used as compact switches in applications requiring high current switching capabilities. Molded case switches are constructed of circuit breaker components and are of the high instantaneous automatic type. Molded case switches are listed in accordance with Underwriters Laboratories, Inc., Standard UL 1087.

Maximum Continuous Ampere Rating @ 40°C	600 Vac Maximum, 250 Vdc		Standard Terminals Only See page 40 for Optional Terminals
	Complete Circuit Breaker Only Without Line and Load Terminals		
		Suitable for Reverse Feed Use	
	Catalog Number		
2-Pole			
250	JD2250WK	JDB2250WK	TA250KB①
3-Pole			
250	JD3250WK	JDB3250WK	TA250KB①

Note: Molded case switches may open above 2500 amperes.

Instruction Leaflet/FRED Number 29C103

① Individually packed.

Line and Load Terminals

Line and load terminals provide wire connecting capabilities for specific ranges of continuous current ratings and wire types. All terminals comply with Underwriters Laboratories, Inc., Standards UL486A and UL486B and CSA Standard C22.2 No. 65, or Electrical Bulletin 1165. Unless otherwise specified, J-frame circuit breaker line and load terminals are shipped separately for field installation.

The bottom of the standard TA250KB terminal contains a recess which is positioned over the J-frame circuit breaker terminal conductor.

Ordering Information

J-frame circuit breakers use Cu/Al terminals as standard. When optional copper-only terminals are required, order by catalog number. Specify if factory installation is required.

Line and Load Terminals

Maximum Breaker Amperes	Terminal Body Material	Wire Type	AWG Wire Range/ No. Conductors	Metric Wire Range mm^2	Catalog Numbers
Standard Cu/Al Pressure Terminals					
250	Aluminum	Cu/Al	#4-350 kcmil	25-185	**TA250KB**
250	Stainless Steel	Cu	#4-350 kcmil	25-185	**T250KB**

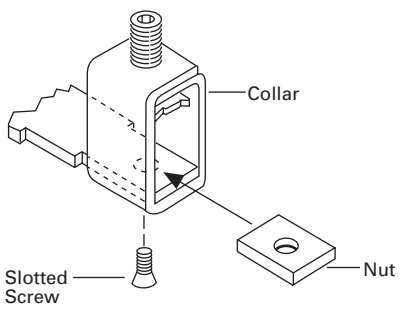

T250KB Terminal

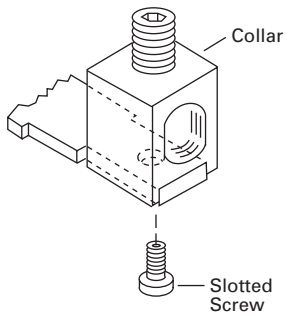

TA250KB Terminal

Catalog Numbering System

This information is presented only as an aid to understanding catalog numbers. It is not to be used to build catalog numbers for circuit breakers or trip units.

Circuit Breaker/Frame Catalog Number

JD 3 250 F

- JD: Circuit Breaker/Frame Type
- 3: Number of Poles
- 250: Circuit Breaker/Frame Ampere Rating
- F: Suffix

JDB	2: 2 Poles	70	C: Non-Aluminum Terminals
JD	3: 3 Poles	90	F: Frame Only
HJD	4: 4 Poles	100	K: High Magnetic Molded Case Switch
JDC		125	V: 50°C Calibration
		150	W: Without Terminals
		175	X: Load Side Terminals Only
		200	Y: Line Side Terminals Only
		225	
		250	

Trip Unit Catalog Number

JT 3 250 T

- JT: Trip Unit Type
- 3: Number of Poles
- 250: Trip Unit/Rating Plug Ampere Rating
- T: Suffix

JT:	Thermal-Magnetic	2	70	T: Trip Unit Thermal-Magnetic Fixed Thermal Adj. Magnetic
		3	90	
		4	100	
			125	
			150	V: 50°C Calibration (Thermal-Magnetic Trip Units Only)
			175	
			200	
			225	
			250	

Dimensions/Weights

Dimensions, Inches (mm)

Number of Poles	Width	Height	Depth
2, 3	4.125 (105)	10 (255)	4.063 (103)
4	5.5 (140)	10 (254)	4.063 (103)

Approximate Shipping Weight, Lbs. (kg)

Breaker Type	Complete Breaker			Frame Only			Trip Unit①		
	Number of Poles								
	2	3	4	2	3	4	2	3	4
JDB	11.25 (5.103)	12.5 (5.670)	–	–	–	–	–	–	–
JD	11.25 (5.103)	12.5 (5.670)	13.25 (6.010)	9 (4.082)	10 (4.536)	10.5 (4.763)	2 (.907)	2 (.907)	2.25 (1.021)
HJD	11.25 (5.103)	12.5 (5.670)	13.25 (6.010)	9 (4.082)	10 (4.536)	10.5 (4.763)	2 (.907)	2 (.907)	2.25 (1.021)
JDC	12.25 (5.103)	13.5 (6.124)	14.25 (6.470)	10 (4.536)	11 (4.990)	11.5 (5.217)	2 (.907)	2 (.907)	2.25 (1.021)

Series C® J-Frame Allowable Accessory Combinations

Different combinations of accessories can be supplied, depending on the types of accessories and the number of poles in the circuit breaker.

	Reference Page		2-, 3-Pole				4-Pole			
			Left	Center	Right		Left	Center	Right	Neu.
Internal Accessories (Only One Internal Accessory Per Pole)										
Alarm Lockout (Make/Break)	140		❑		❑		❑		❑	
Auxiliary Switch (1A, 1B)	142		■		■		■		■	
Auxiliary Switch (2A, 2B)	142		■		■		■		■	
Auxiliary Switch and Alarm Switch Combination	145		❑		❑		❑		❑	
Shunt Trip – Standard	148		■		■		■		■	
Shunt Trip – Low Energy	152		■		■		■		■	
Undervoltage Release Mechanism	155		■		■		■		■	
External Accessories										
End Cap Kit	161			●				●		
Plug Nut	161			●				●		
Control Wire Terminal Kit	162			●				●		
Multiwire Connectors	162			●				●		
Base Mounting Hardware	163			●				●		
Terminal Shields	165			●				●		
Interphase Barriers	166			●				●		
Non-Padlockable Handle Block	168			■				■		
Padlockable Handle Block	168			■				■		
Padlockable Handle Lock Hasp	169		❑		❑		❑		❑	
Cylinder Lock	169		❑		❑					
Key Interlock Kit	170		❑		❑		❑		❑	
Sliding Bar Interlock – Requires Two Breakers	171			●						
Electrical (Solenoid) Operator	172			●				●		
Plug-in Adapters	174			●				●		
Rear Connecting Studs	176			●				●		
Panelboard Connecting Straps	177			●				●		
Handle Mechanisms	178			●				●		
Door Hardware/Accessories	182			●				●		
Handle Extension	182			●				●		
IQ Energy Sentinel	184			●						
Modifications (Refer to Cutler-Hammer)										
Special Calibration	186			●				●		
Moisture Fungus Treatment	186			●				●		
Freeze-Tested Circuit Breakers	186			●				●		
Marine/Naval Application	186			●				●		

■ Applicable in indicated pole position

❑ May be mounted on left or right pole – not both

● Accessory available/Modification available

Typical Series C K-Frame Circuit Breaker

- All Series C K-frame Circuit Breakers are HACR rated.
- K-frame circuit breakers are available as individual components (Frame, Trip Unit, Terminals), or factory assembled complete breakers. OPTIM circuit breakers are available as factory assembled only.
- K-frame circuit breakers with non-interchangeable trip units are suitable for reverse feed use.

Interrupting Capacity Ratings

NEMA/UL489/CSA Interrupting Capacity Ratings

Circuit Breaker Type	Number of Poles	Interrupting Capacity (Symmetrical Amperes) (kA)					Page Number
		Volts Ac (50/60Hz)				Volts Dc	
		240	277	480	600	250②③	
DK	2, 3	65	–	–	–	10	47
KDB	2, 3, 4	65	–	35	25	10	47
KD	2, 3, 4	65	–	35	25	10	45, 46, 49
HKD	2, 3, 4	100	–	65	35	22	45, 46, 49
KDC	2, 3, 4	200	–	100	50	22	45, 46, 49
CKD	3	65	–	35	25	10	48, 50
CHKD	3	100	–	65	35	22	48, 50

IEC 157-1 (P1) Interrupting Capacity Ratings

Circuit Breaker Type	Number of Poles	Interrupting Capacity (Symmetrical Amperes) (kA)							Page Number
		Volts Ac (50/60Hz)						Volts Dc	
		240	380	415	440	500	600	250③	
DK	2, 3	65	–	–	–	–	–	10	47
KDB	2, 3, 4	65	40	40	–	–	–	10	47
KD	2, 3, 4	65	40	40	–	–	–	10	45, 46, 49
HKD	2, 3, 4	100	65	65	–	–	–	22	45, 46, 49
KDC	2, 3, 4	200	100	100	–	–	–	22	45, 46, 49

① Weights shown are for thermal magnetic trip units. 3-pole electronic trip units weigh 2.5 lbs. (1.134 kg).
② 2-pole circuit breaker or two outside poles of 3-pole circuit breaker.
③ Time constant is 3 milliseconds minimum at 10 kA and 8 milliseconds minimum at 22 kA.

K-Frame Digitrip Selection Guide

Trip Unit Type	Digitrip RMS 310		Digitrip OPTIM 550
RMS Sensing	Yes		Yes
Breaker Type			
Frame	K		K
Ampere Range	70-400A		70-400A
Interrupting Rating at 480V	35, 65, 100 (kA)		35, 65, 100 (kA)
Protection			
Ordering Options	LS, LSG	LSI, LSIG	LSI, LSI(A), LSIG
Fixed Rated Plug (I_n)	Yes	Yes	Yes
Overtemperature Trip	Yes	Yes	Yes
Long Delay Protection (L)			
Adjustable Rating Plug (I_n)	Yes	Yes	No
Long Delay Pickup	0.5-1.0 (I_n)①	0.5-1.0 (I_n)①	0.4-1.0 x (I_n)
Long Delay Time I^2T	12 Seconds	12 Seconds	2-24 Seconds
Long Delay Time I^4T	No	No	1-5 Seconds
Long Delay Thermal Memory	Yes	Yes	Yes
High Load Alarm	No	No	0.5-1.0 x I_r
Short Delay Protection (S)			
Short Delay Pickup	200-800% x (I_n)	200-800% x (I_n)	150-800% x (I_r)
Short Delay Time I^2T	100 ms	No	100-500 ms
Short Delay Time Flat	No	Inst-300 ms	100-500 ms
Short Delay Time Zone Selective Interlocking	No	No	No
Instantaneous Protection (I)			
Instantaneous Pickup	No	200-800% x (I_n)	200-800% x (I_n)
Discriminator	No	No	Yes
Instantaneous Override	Yes	Yes	Yes
Ground Fault Protection (G)			
Ground Fault Alarm	No	No	20-100% x (I_s)
Ground Fault Pickup	Varies by Frame	Varies by Frame	20-100% x (I_s)
Ground Fault Delay I^2T	No	No	100-500 ms
Ground Fault Delay Flat	Inst-500 ms	Inst-500 ms	100-500 ms
Ground Fault Zone Selective Interlocking	No	No	No
Ground Fault Thermal Memory	Yes	Yes	Yes
System Diagnostics			
Status LEDs	Yes	Yes	Yes
Cause of Trip LEDs	No	No	Yes
Magnitude of Trip Information	No	No	Yes
Remote Signal Contact – Ground Alarm	Yes	Yes	No
Local Auxiliary and Bell Alarm Contact	Optional	Optional	Optional
System Monitoring			
Digital Display	No	No	Yes②
Current	No	No	Yes
Power and Energy	No	No	No
Power Quality-Harmonics	No	No	No
Power Factor	No	No	No
Communications			
Cutler-Hammer PowerNet	No	No	No③
Testing			
Testing Method	Test Set		OPTIMizer, BIM, Cutler-Hammer PowerNet

① Adjust by rating plug.
② By OPTIMizer/BIM.
③ Cutler-Hammer PowerNet kit for field upgrade.

BIM = Breaker Interface Module
(A) = GF Alarm

I_s = Sensor Rating
I_n = Rating Plug
I_r = Long Delay Pickup Setting

Types KD, HKD, and KDC Thermal-Magnetic Circuit Breakers with Interchangeable Trip Units

Maximum Continuous Ampere Rating @ 40°C	Standard Interrupting Capacity 600 Vac Rated 35 kAIC @ 480 Vac		High Interrupting Capacity 600 Vac Rated 65 kAIC @ 480 Vac		Ultra High Interrupting Capacity Current Limiting 600 Vac Rated 100 kAIC @ 480 Vac		Thermal Magnetic Trip Unit Only For Use With: Standard or High or Ultra High Interrupting Frames	Standard Terminals Only See Page 51 for Optional Terminals
	Factory Assembled Circuit Consisting of Frame, Trip Unit, and Terminals	Frame Only	Factory Assembled Circuit Consisting of Frame, Trip Unit, and Terminals	Frame Only	Factory Assembled Circuit Consisting of Frame, Trip Unit, and Terminals	Frame Only		
	Catalog Number							
2-Pole								
100	KD2100	KD2400F	HKD2100	HKD2400F	KDC2100	KDC2400F	KT2100T	TA300K①
125	KD2125		HKD2125		KDC2125		KT2125T	TA300K①
150	KD2150		HKD2150		KDC2150		KT2150T	TA300K①
175	KD2175		HKD2175		KDC2175		KT2175T	TA300K①
200	KD2200		HKD2200		KDC2200		KT2200T	TA300K①
225	KD2225		HKD2225		KDC2225		KT2225T	TA300K①
250	KD2250		HKD2250		KDC2250		KT2250T	TA350K①
300	KD2300		HKD2300		KDC2300		KT2300T	TA350K①
350	KD2350		HKD2350		KDC2350		KT2350T	TA350K①
400	KD2400		HKD2400		KDC2400		KT2400T	2TA400K②
3-Pole								
100	KD3100	KD3400F	HKD3100	HKD3400F	KDC3100	KDC3400F	KT3100T	TA300K①
125	KD3125		HKD3125		KDC3125		KT3125T	TA300K①
150	KD3150		HKD3150		KDC3150		KT3150T	TA300K①
175	KD3175		HKD3175		KDC3175		KT3175T	TA300K①
200	KD3200		HKD3200		KDC3200		KT3200T	TA300K①
225	KD3225		HKD3225		KDC3225		KT3225T	TA300K①
250	KD3250		HKD3250		KDC3250		KT3250T	TA350K①
300	KD3300		HKD3300		KDC3300		KT3300T	TA350K①
350	KD3350		HKD3350		KDC3350		KT3350T	TA350K①
400	KD3400		HKD3400		KDC3400		KT3400T	3TA400K②
4-Pole								
100	KD4100	KD4400F	HKD4100	HKD4400F	KDC4100	KDC4400F	KT3100T	TA300K①
125	KD4125		HKD4125		KDC4125		KT3125T	TA300K①
150	KD4150		HKD4150		KDC4150		KT3150T	TA300K①
175	KD4175		HKD4175		KDC4175		KT3175T	TA300K①
200	KD4200		HKD4200		KDC4200		KT3200T	TA300K①
225	KD4225		HKD4225		KDC4225		KT3225T	TA300K①
250	KD4250		HKD4250		KDC4250		KT3250T	TA350K①
300	KD4300		HKD4300		KDC4300		KT3300T	TA350K①
350	KD4350		HKD4350		KDC4350		KT3350T	TA350K①
400	KD4400		HKD4400		KDC4400		KT3400T	4TA400K②

Instruction Leaflet/FRED Number 29C104 for Breaker; 29C603 for Thermal Magnetic Trip Unit

① Individually packed.
② 2TA400K, 3TA400K, and 4TA400K terminal kits contain one terminal for each pole and one terminal cover.

Types KD, HKD, and KDC Electronic Circuit Breakers with Interchangeable Trip Units

Order as individual components: Breaker Frame, Trip Unit, Rating Plug, Terminals.

Maximum Continuous Ampere Rating @ 40°C①	Circuit Breaker Frame Only			Digitrip RMS 310 Trip Unit Only②				Digitrip 310 Rating Plug Only			Standard Terminals Only
	Standard Interrupting Capacity 600 Vac Rated 35 kAIC @ 480 Vac	High Interrupting Capacity 600 Vac Rated 65 kAIC @ 480 Vac	Ultra High Interrupting Capacity Current Limiting 600 Vac Rated 100 kAIC @ 480 Vac	Standard	Options			Ampere Rating	Fixed Rating Plug	Adjustable Rating Plugs	See Page 51 for Optional Terminals
				Adjustable Short Time Delay with I^2t Short Delay Ramp	Independently Adjustable Short Time Pickup and Delay	Adjustable Short Time Pickup with I^2t Short Delay and Ground Fault Protection	Independently Adjustable Short Time Pickup and Delay and Ground Fault Protection			Ampere Rating Catalog Number	
	Catalog Number										
3-Pole③											
125	**KD3400F**	**HKD3400F**	**KDC3400F**	**KES3125LS**	**KES3125LSI**	**KES3125LSG**	**KES3125LSIG**	70 90 100 110 125	**1KES070T** **1KES090T** **1KES100T** **1KES110T** **1KES125T**	70/90/100/125 **A1KES125T1**	**TA300K④**
250	**KD3400F**	**HKD3400F**	**KDC3400F**	**KES3250LS**	**KES3250LSI**	**KES3250LSG**	**KES3250LSIG**	70 100 125 150 160 175 200 225 250	**2KES070T** **2KES100T** **2KES125T** **2KES150T** **2KES160T** **2KES175T** **2KES200T** **2KES225T** **2KES250T**	125/150/200/250 **A2KES250T1**	**TA300K④**
400	**KD3400F**	**HKD3400F**	**KDC3400F**	**KES3400LS**	**KES3400LSI**	**KES3400LSG**	**KES3400LSIG**	200 225 250 300 350 400	**4KES200T** **4KES225T** **4KES250T** **4KES300T** **4KES350T** **4KES400T**	200/250/300/400 **A4KES400T1**	**TA300K④** **TA300K④** **TA300K④** **TA300K④** **TA350K④** **3TA400K④**
4-Pole⑥⑦											
125	**KD4400F**	**HKD4400F**	**KDC4400F**	**KES4125LS**	**KES4125LSI**	–	–	70 90 100 110 125	**1KES070T** **1KES090T** **1KES100T** **1KES110T** **1KES125T**	70/90/100/125 **A1KES125T1**	**TA300K④**
250	**KD4400F**	**HKD4400F**	**KDC4400F**	**KES4250LS**	**KES4250LSI**	–	–	70 100 125 150 160 175 200 225 250	**2KES070T** **2KES100T** **2KES125T** **2KES150T** **2KES160T** **2KES175T** **2KES200T** **2KES225T** **2KES250T**	125/150/200/250 **A2KES250T1**	**TA300K④**
400	**KD4400F**	**HKD4400F**	**KDC4400F**	**KES4400LS**	**KES4400LSI**	–	–	200 225 250 300 350 400	**4KES200T** **4KES225T** **4KES250T** **4KES300T** **4KES350T** **4KES400T**	200/250/300/400 **A4KES400T1**	**TA300K④** **TA300K④** **TA300K④** **TA300K④** **TA350K④** **3TA400K④**

Instruction Leaflet/FRED Number 29C104 for Breaker; 29C614 for Electronic Trip Unit

① Ampere rating is established by rating plug.
② For Ac use only.
③ 3-pole KES Trip Units are for use in 3-pole frames only.
④ Individually packed.
⑤ 3TA400K and 4TA400K terminal kits contain one terminal for each pole and one terminal cover.
⑥ Trip unit includes protected neutral pole. Use corresponding 3-pole trip unit if protected neutral pole is not required.
⑦ Fully rated neutral pole protection is standard. For 50% rated protection on neutral pole, add suffix E to 4-pole trip unit catalog number.

Types DK and KDB Thermal-Magnetic Circuit Breakers with Non-Interchangeable Trip Units

Maximum Continuous Ampere Rating @ 40°C	240 Vac Rated, 250 Vdc		
	Complete Circuit Breaker		
	Without Line and Load Terminals	With Line Terminals Only	With Standard Line and Load Terminals Only
	Catalog Number		
2-Pole			
100	–	–	–
125	–	–	–
150	–	–	–
175	–	–	–
200	–	–	–
225	–	–	–
250	DK2250W	DK2250Y	DK2250
300	DK2300W	DK2300Y	DK2300
350	DK2350W	DK2350Y	DK2350
400	DK2400W	DK2400Y	DK2400
3-Pole			
100	–	–	–
125	–	–	–
150	–	–	–
175	–	–	–
200	–	–	–
225	–	–	–
250	DK3250W	DK3250Y	DK3250
300	DK3300W	DK3300Y	DK3300
350	DK3350W	DK3350Y	DK3350
400	DK3400W	DK3400Y	DK3400

Maximum Continuous Ampere Rating @ 40°C	600 Vac Rated, 250 Vdc	
	Complete Circuit Breaker	
	Without Line and Load Terminals	With Standard Line and Load Terminals
	Catalog Number	
2-Pole		
100	KDB2100W	KDB2100
125	KDB2125W	KDB2125
150	KDB2150W	KDB2150
175	KDB2175W	KDB2175
200	KDB2200W	KDB2200
225	KDB2225W	KDB2225
250	KDB2250W	KDB2250
300	KDB2300W	KDB2300
350	KDB2350W	KDB2350
400	KDB2400W	KDB2400
3-Pole		
100	KDB3100W	KDB3100
125	KDB3125W	KDB3125
150	KDB3150W	KDB3150
175	KDB3175W	KDB3175
200	KDB3200W	KDB3200
225	KDB3225W	KDB3225
250	KDB3250W	KDB3250
300	KDB3300W	KDB3300
350	KDB3350W	KDB3350
400	KDB3400W	KDB3400

Instruction Leaflet/FRED Number 29C104

Molded Case Switches

Molded case switches are used as compact switches in applications requiring high current switching capabilities. Molded case switches are constructed of circuit breaker components and are of the high instantaneous automatic type. Molded case switches are listed in accordance with Underwriters Laboratories, Inc., Standard UL 1087.

Maximum Continuous Ampere Rating @ 40°C	240 Vac Maximum, 250 Vdc	600 Vac Maximum, 250 Vdc	600 Vac Maximum, 250 Vdc
	Complete Circuit Breaker with Standard Line and Load Terminals	Complete Circuit Breaker with Standard Line and Load Terminals	Complete Circuit Breaker with Standard Line and Load Terminals. Suitable for Reverse Feed Use
	Catalog Number		
2-Pole			
400	DK2400K	KD2400K	KDB2400K
3-Pole			
400	DK3400K	KD3400K	KDB3400K
4-Pole			
400	–	KD4400K	–

Note: Molded case switches may open above 4000 amperes.

Instruction Leaflet/FRED Number 29C104

100% Rated Types CKD and CHKD Electronic Circuit Breakers

The NEC allows the breaker to be rated at 100% of its frame size in an assembly, provided that 90°C wire is applied at the 75°C ampacity. All 100% rated circuit breakers have electronic trip units.

Maximum Continuous Ampere Rating @ 40°C	Circuit Breaker Frame Only		Digitrip RMS 310 Trip Unit Only				Digitrip 310 Rating Plug Only			Standard Terminals Only
	Standard Interrupting Capacity 35 kAIC @ 480 Vac	High Interrupting Capacity 65 kAIC @ 480 Vac	Standard	Options			Ampere Rating	Fixed Rating Plug	Adjustable Rating Plug	See Page 51 for Optional Terminals
			Adjustable Short Time Delay with I^2t Short Delay Ramp	Independently Adjustable Short Time Pickup and Delay	Adjustable Short Time Pickup with I^2t Short Delay and Ground Fault Protection	Independently Adjustable Short Time Pickup and Delay and Ground Fault Protection			Ampere Rating Catalog Number	
	Catalog Number									
3-Pole										
125	**CKD3400F**	**CHKD3400F**	**KES3125LS**	**KES3125LSI**	**KES3125LSG**	**KES3125LSIG**	70 90 100 110 125	**1KES070T** **1KES090T** **1KES100T** **1KES110T** **1KES125T**	70/90/100/125 **A1KES125T1**	**TA300K④**
250	**CKD3400F**	**CHKD3400F**	**KES3250LS**	**KES3250LSI**	**KES3250LSG**	**KES3250LSIG**	70 100 125 150 160 175 200 225 250	**2KES070T** **2KES100T** **2KES125T** **2KES150T** **2KES160T** **2KES175T** **2KES200T** **2KES225T** **2KES250T**	125/150/200/250 **A2KES250T1**	**TA300K④**
400	**CKD3400F**	**CHKD3400F**	**KES3400LS**	**KES3400LSI**	**KES3400LSG**	**KES3400LSIG**	200 225 250 300 350 400	**4KES200T** **4KES225T** **4KES250T** **4KES300T** **4KES350T** **4KES400T**	200/250/300/400 **A4KES400T1**	**TA300K④** **TA300K④** **TA300K④** **TA300K④** **TA350K④** **3TA400K④**

Instruction Leaflet/FRED Number 29C104 for Breaker; 29C614 for KES Trip Unit

① Individually packed.
② TA400K, T400K and TA401K terminal kits contain one terminal for each pole and one terminal cover.

Digitrip OPTIM 550 Electronic Circuit Breakers with Interchangeable Rating Plug

Order as individual components: Breaker Frame (which includes Trip Unit), Rating Plug, Terminals.

Maximum Continuous Ampere Rating @ 40°C	Circuit Breaker Frame Only			Digitrip OPTIM Rating Plug Only	
	L – Adjustable Long Delay Pickup (I_r) with Adjustable Long Delay Time (I^2t or I^4t Response)① S – Adjustable Short Delay Pickup with Adjustable Short Delay Time (I^2t or Flat Response) I – Adjustable Instantaneous Pickup G – Adjustable Ground Fault Pickup with Adjustable Ground Fault Time (I^2t or Flat Response) A – Adjustable Ground Fault Alarm with Adjustable Ground Fault Time (I^2t or Flat Response)			Ampere Rating	Fixed Rating Plug
	OPTIM 550				
	LSI	LSIG	LSIA		
	Catalog Number				
3-Pole Standard Interrupting Capacity 600 Volt Ac Rated 35 kAIC @ 480 Vac					
125	KD3125T52W	KD3125T56W	KD3125T57W	70 90 100 110 125	ORPK125A070 ORPK125A090 ORPK125A100 ORPK125A110 ORPK125A125
250	KD3250T52W	KD3250T56W	KD3250T57W	125 150 175 200 225 250	ORPK025A125 ORPK025A150 ORPK025A175 ORPK025A200 ORPK025A225 ORPK025A250
400	KD3400T52W	KD3400T56W	KD3400T57W	200 225 250 300 350 400	ORPK40A200 ORPK40A225 ORPK40A250 ORPK40A300 ORPK40A350 ORPK40A400
3-Pole High Interrupting Capacity 600 Volt Ac Rated 65 kAIC @ 480 Vac					
125	HKD3125T52W	HKD3125T56W	HKD3125T57W	70 90 100 110 125	ORPK125A070 ORPK125A090 ORPK125A100 ORPK125A110 ORPK125A125
250	HKD3250T52W	HKD3250T56W	HKD3250T57W	125 150 175 200 225 250	ORPK025A125 ORPK025A150 ORPK025A175 ORPK025A200 ORPK025A225 ORPK025A250
400	HKD3400T52W	HKD3400T56W	HKD3400T57W	200 225 250 300 350 400	ORPK40A200 ORPK40A225 ORPK40A250 ORPK40A300 ORPK40A350 ORPK40A400
3-Pole Ultra High Interrupting Capacity Current Limiting 600 Volt Ac Rated 100 kAIC @ 480 Vac					
125	KDC3125T52W	KDC3125T56W	KDC3125T57W	70 90 100 110 125	ORPK125A070 ORPK125A090 ORPK125A100 ORPK125A110 ORPK125A125
250	KDC3250T52W	KDC3250T56W	KDC3250T57W	125 150 175 200 225 250	ORPK025A125 ORPK025A150 ORPK025A175 ORPK025A200 ORPK025A225 ORPK025A250
400	KDC3400T52W	KDC3400T56W	KDC3400T57W	200 225 250 300 350 400	ORPK40A200 ORPK40A225 ORPK40A250 ORPK40A300 ORPK40A350 ORPK40A400

Instruction Leaflet/FRED Number 29C104

① Long delay I^4t response selection limits short delay time to flat response.

100% Rated Digitrip OPTIM 550 Electronic Circuit Breakers with Interchangeable Rating Plug

Order as individual components: Breaker Frame (which includes Trip Unit), Rating Plug, Terminals.

Maximum Continuous Ampere Rating @ 40°C	Circuit Breaker Frame Only			Digitrip OPTIM Rating Plug Only	
	L – Adjustable Long Delay Pickup (I_r) with Adjustable Long Delay Time (I^2t or I^4t Response)① S – Adjustable Short Delay Pickup with Adjustable Short Delay Time (I^2t or Flat Response) I – Adjustable Instantaneous Pickup G – Adjustable Ground Fault Pickup with Adjustable Ground Fault Time (I^2t or Flat Response) A – Adjustable Ground Fault Alarm with Adjustable Ground Fault Time (I^2t or Flat Response)			Ampere Rating	Fixed Rating Plug
	OPTIM 550				
	LSI	LSIG	LSIA		
	Catalog Number				
3-Pole Standard Interrupting Capacity 600 Volt Ac Rated 35 kAIC @ 480 Vac					
125	CKD3125T52W	CKD3125T56W	CKD3125T57W	70 90 100 110 125	ORPK125A070 ORPK125A090 ORPK125A100 ORPK125A110 ORPK125A125
250	CKD3250T52W	CKD3250T56W	CKD3250T57W	125 150 175 200 225 250	ORPK025A125 ORPK025A150 ORPK025A175 ORPK025A200 ORPK025A225 ORPK025A250
400	CKD3400T52W	CKD3400T56W	CKD3400T57W	200 225 250 300 350 400	ORPK40A200 ORPK40A225 ORPK40A250 ORPK40A300 ORPK40A350 ORPK40A400
3-Pole High Interrupting Capacity 600 Volt AC Rated 65 kAIC @ 480 Vac					
125	CHKD3125T52W	CHKD3125T56W	CHKD3125T57W	70 90 100 110 125	ORPK125A070 ORPK125A090 ORPK125A100 ORPK125A110 ORPK125A125
250	CHKD3250T52W	CHKD3250T56W	CHKD3250T57W	125 150 175 200 225 250	ORPK025A125 ORPK025A150 ORPK025A175 ORPK025A200 ORPK025A225 ORPK025A250
400	CHKD3400T52W	CHKD3400T56W	CHKD3400T57W	200 225 250 300 350 400	ORPK40A200 ORPK40A225 ORPK40A250 ORPK40A300 ORPK40A350 ORPK40A400

Instruction Leaflet/FRED Number 29C104

① Long delay I^4t response selection limits short delay time to flat response.

Line and Load Terminals

Line and load terminals provide wire connecting capabilities for specific ranges of continuous current ratings and wire types. All terminals comply with Underwriters Laboratories, Inc., Standards UL486A and UL486B and CSA Standard C22.2 No. 65, or Electrical Bulletin 1165. Unless otherwise specified, K-frame circuit breaker line and load terminals are shipped separately for field installation.

Ordering Information

K-frame circuit breakers use Cu/Al terminals as standard. When optional copper or Cu/Al terminals are required, order by catalog number. Specify if factory installation is required.

Line and Load Terminals

Maximum Breaker Amperes	Terminal Body Material	Wire Type	AWG Wire Range/ No. Conductors	Metric Wire Range mm^2	Terminal Catalog Number	Figure	Terminals with Control Wire Termination Catalog Number	Figure
Standard Cu/Al Pressure Terminals								
225	Aluminum	Cu/Al	3-350/(1)	35-185	**TA300K**①	4	–	–
350	Aluminum	Cu/Al	250-500/(1)	120-240	**TA350K**①	3	–	–
400	Aluminum	Cu/Al	3/0-250/(2)	95-120	**2TA400K**④	2	**2TA400KCW**④	5
					3TA400K⑤	2	**3TA400KCW**⑤	5
					4TA400K⑥	2	**4TA400KCW**⑥	5
Optional Copper and Cu/Al Pressure Type Terminals								
225	Copper	Cu	3-350/(1)	35-185	**T300K**①	4	–	–
350	Copper	Cu	250-500/(1)	120-240	**T350K**①	3	–	–
400	Copper	Cu	3/0-250/(2)	95-120	**2T400K**④	2	**2T400KCW**④	5
					3T400K⑤	2	**3T400KCW**⑤	5
					4T400K⑥	2	**4T400KCW**⑥	5
400	Aluminum	Cu/Al	2/0-250/(2)	70-120	**2TA401K**④	1	**2TA401KCW**④	5
			or	70-240	**3TA401K**⑤	1	**3TA401KCW**⑤	5
			2/0-500/(1)	70-240	**4TA401K**⑥	1	**4TA401KCW**⑥	5
400	Aluminum	Cu/Al	500-750/(1)	300-400	**TA402K**	6	–	–

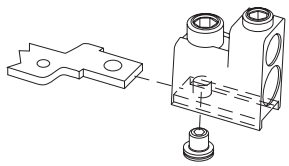

Figure 1. TA401K

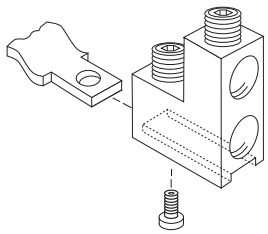

Figure 2. TA400K, T400K

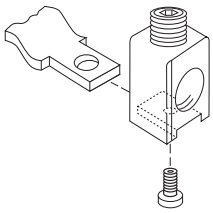

Figure 3. TA350K, T350K

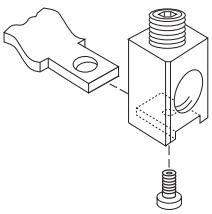

Figure 4. TA300K, T300K

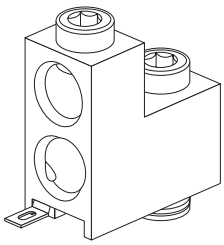

Figure 5. T400KCW, TA400KCW, TA401KCW

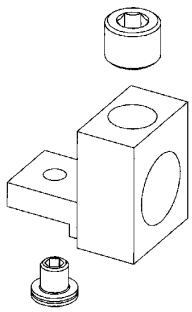

Figure 6. TA402K

See page 53 for other termination accessories.

① Individually packed.
② Terminal kits contain one terminal for each pole and one terminal cover.
③ Terminal kits contain one terminal for each pole and three interphase barriers.
④ 2-Pole Kit.
⑤ 3-Pole Kit.
⑥ 4-Pole Kit.

Catalog Numbering System

This information is presented only as an aid to understanding catalog numbers. It is not to be used to build catalog numbers for circuit breakers or trip units.

Circuit Breaker/Frame Catalog Number

KD 3 400 F

Circuit Breaker/ Frame Type	Number of Poles	Circuit Breaker/ Frame Ampere Rating	Suffix
DK DKB KD HKD KDC CKD CHKD	2: 2 Poles 3: 3 Poles 4: 4 Poles	100 125 150 175 200 225 250 300 350 400	C: Copper Terminals E: 50% Protected Neutral Pole (4-Pole Electronic Trip Circuit Breaker Only) F: Frame Only K: High Magnetic Molded Case Switch W: Without Terminals X: Load Side Terminals Only Y: Line Side Terminals Only No Suffix Number Indicates Standard Load and Lineside Terminals

Trip Unit Catalog Number

KT 3 400 T

Trip Unit Type	Number of Poles	Trip Unit/ Rating Plug Ampere Rating	Suffix
KT: Thermal-Magnetic KES: Electronic	2: 2 Poles 3: 3 Poles 4: 4 Poles	70① 90① 100 125 150 175 200 225 250 300 350 400	LS: Electronic Trip Unit Adjustable Short Time Delay with I^2t Short Delay Ramp LSI: Electronic Trip Unit Independently Adjustable Short Time Pickup and Delay LSG: Electronic Trip Unit Adjustable Short Time Pickup with I^2t Short Delay and Ground Fault Protection LSIG: Electronic Trip Unit Independently Adjustable Short Time Pickup and Delay and Ground Fault Protection V: 50°C Calibration (Thermal-Magnetic Trip Units Only) E: 50% Protected Neutral Pole (4-Pole Electronic Trip Unit Only) Terminals Only T: Trip Unit Only

OPTIM Circuit Breaker/Frame Catalog Number

KD 3 125 T5 7 W

Circuit Breaker/ Frame Type	Number of Poles	Circuit Breaker/ Frame Ampere Rating	Trip Model	Trip Type	Suffix
KD HKD KDC CKD CHKD	3: 3 Poles	125 250 400	T5 – Model 550	2 – LSI 6 – LSIG 7 – LSIA	W: Without Terminals

Dimensions/Weights

Dimensions, Inches (mm)

Number of Poles	Width	Height	Depth
2, 3	5.5 (140)	10.125 (257)	4.063 (103)
4	7.219 (183)	10.125 (257)	4.063 (103)

Approximate Shipping Weight, Lbs. (kg)

Breaker Type	Complete Breaker		Frame Only		Trip Unit①	
	Number of Poles					
	2	3	2	3	2	3
DK	10 (4.536)	11.5 (5.216)	–	–	–	–
KDB	10 (4.536)	11.5 (5.216)	–	–	–	–
KD	10 (4.536)	11.5 (5.216)	7.5 (3.402)	8.5 (3.856)	1.5 (.680)	1.5 (.680)
HKD	10 (4.536)	11.5 (5.216)	7.5 (3.402)	8.5 (3.856)	1.5 (.680)	1.5 (.680)
KDC	10 (4.536)	11.5 (5.216)	7.5 (3.402)	8.5 (3.856)	1.5 (.680)	1.5 (.680)

① Ampere rating available with electronic trip unit only.

Allowable Accessory Combinations

Different combinations of accessories can be supplied, depending on the types of accessories and the number of poles in the circuit breaker.

	Reference Page	2-Pole①			3-Pole				4-Pole			
		Left	Right		Left	Center	Right		Left	Center	Right	Neu.
Internal Accessories (Only One Internal Accessory Per Pole)												
Alarm Lockout (Make/Break)	140		■		❑		❑		■			
Alarm Lockout (2Make/2Break)	140				❑		❑		■			
Auxiliary Switch (1A, 1B)	143		■		■		■		■		■	
Auxiliary Switch (2A, 2B)	143				■		■		■		■	
Auxiliary Switch (3A, 3B)	143				■		■		■		■	
Auxiliary Switch and Alarm Switch Combination	145				❑		❑		❑		❑	
Shunt Trip – Standard	149		■		■		■		■		■	
Shunt Trip – Low Energy	152				■		■		■			
Undervoltage Release Mechanism	156		■		■		■		■			
Cutler-Hammer PowerNet Communications Kit (OPTIM 550)	160						■					
External Accessories												
End Cap Kit	161	●			●				●			
Keeper Nut	161	●			●				●			
Control Wire Terminal Kit	162	●			●				●			
Multiwire Connectors	162	●			●				●			
Base Mounting Hardware	163	●			●				●			
Terminal Shields	165	●			●				●			
Interphase Barriers	166	●			●				●			
Non-Padlockable Handle Block	168	■				■				■		
Padlockable Handle Block	168					■						
Padlockable Handle Lock Hasp	169		■		❑		❑		❑		❑	
Cylinder Lock	169	❑	❑		❑		❑					
Key Interlock Kit	170	■	❑		❑		❑		❑		❑	
Sliding Bar Interlock – Requires Two Breakers	171				●							
Walking Beam Interlock – Requires Two Breakers	171				●				●			
Electrical (Solenoid) Operator	172				●				●			
Plug-in Adapters	174	●			●				●			
Rear Connecting Studs	176	●			●				●			
Panelboard Connecting Straps	177	●			●				●			
Handle Mechanisms	178	●			●				●			
Door Hardware/Accessories	182	●			●				●			
Handle Extension	182	●			●				●			
IQ Energy Sentinel	184				●				●			
Solid-State (Electronic) Portable Test Kit	184	●			●				●			
OPTIM System Components 3-Poles												
Breaker Interface Module (BIM)	185											
Digitrip OPTIMizer	185											
Auxiliary Power Module	185											
Cutler-Hammer PowerNet Software	185											
Modifications (Refer to Cutler-Hammer)												
Special Calibration	186	●			●				●			
Moisture Fungus Treatment	186	●			●				●			
Freeze-Tested Circuit Breakers	186	●			●				●			
Marine Application	186	●			●				●			

■ Applicable in indicated pole position

❑ May be mounted on left or right pole – not both

● Accessory available/Modification available

① 2-pole breaker supplied in 3-pole frame. Current carrying parts omitted from center pole.

Typical Series C L-Frame Circuit Breaker

- All Series C L-frame circuit breakers are HACR rated.
- L-frame circuit breakers are available as individual components (Frame, Trip Unit, Terminals), or factory assembled complete breakers. OPTIM circuit breakers are available as factory assembled only.
- L-frame circuit breakers with non-interchangeable trip units are suitable for reverse feed use.

Interrupting Capacity Ratings

UL489 Interrupting Capacity Ratings①

Circuit Breaker Type	Number of Poles	Interrupting Capacity (RMS Symmetrical Amperes) (kA)							Page Number
		Volts Ac (50/60 Hz)					Volts Dc		
		240	277	480	600	125	250②③	500	
LDB	2, 3	65	–	35	25	–	22	–	58
LD	2, 3, 4	65	–	35	25	–	22	–	57, 59
CLD	2, 3, 4	65	–	35	25	–	22	–	58, 61
HLD	2, 3, 4	100	–	65	35	–	25	–	57, 59
CHLD④	2, 3, 4	100	–	65	35	–	25	–	61
LDC	2, 3, 4	200	–	100	50	–	30	–	57, 60
CLDC④	2, 3, 4	200	–	100	50	–	30	–	62

IEC 947-2 Interrupting Capacity Ratings ①

Circuit Breaker Type	Number of Poles		Interrupting Capacity (Symmetrical Amperes) (kA)				Page Number
			Volts Ac (50/60 Hz)			Volts Dc	
			240	415	690	250②③	
LDB	2, 3	I_{cu}	85	45	20	20	58
		I_{cs}	85	45	10	10	
LD	2, 3, 4	I_{cu}	85	45	20	20	57, 59
		I_{cs}	85	45	10	10	
CLD④	2, 3, 4	I_{cu}	85	45	20	20	58, 61
		I_{cs}	85	45	10	10	
HLD	2, 3, 4	I_{cu}	100	70	25	20	57, 59
		I_{cs}	100	70	13	10	
CHLD④	2, 3, 4	I_{cu}	100	70	25	20	61
		I_{cs}	100	70	13	10	
LDC	2, 3, 4	I_{cu}	200	100	35	20	57, 60
		I_{cs}	100	75	18	10	
CLDC④	2, 3, 4	I_{cu}	200	100	35	20	62
		I_{cs}	100	75	18	10	

① Utilization category A circuit breakers.
② L/R = 8 milliseconds minimum.
③ 2-pole circuit breaker or two poles of 3-pole circuit breaker. Incorporating Thermal-Magnetic trip unit only.
④ 100% rated breakers

L-Frame Digitrip Selection Guide

Trip Unit Type	Digitrip RMS 310		Digitrip OPTIM 550	Digitrip OPTIM 750	Digitrip OPTIM 1050
RMS Sensing	Yes		Yes	Yes	Yes
Breaker Type					
Frame	L		L	L	L
Ampere Range	300-600A		200-600A	200-600A	200-600A
Interrupting Rating @ 480V	35, 65, 100 (kA)		35, 65, 100 (kA)	35, 65, 100 (kA)	35, 65, 100 (kA)
Protection					
Ordering Options	LS, LSG	LSI, LSIG	LSI, LSI(A), LSIG	LSI(A), LSIG	LSI(A), LSIG
Fixed Rated Plug (I_n)	Yes	Yes	Yes	Yes	Yes
Overtemperature Trip	Yes	Yes	Yes	Yes	Yes
Long Delay Protection (L)					
Adjustable Rating Plug (I_n)	Yes	Yes	No	No	No
Long Delay Pickup	0.5-1.0 (I_n)①	0.5-1.0 (I_n)①	0.4-1.0 x (I_n)	0.4-1.0 x (I_n)	0.4-1.0 x (I_n)
Long Delay Time I^2T	12 Seconds	12 Seconds	2-24 Seconds	2-24 Seconds	2-24 Seconds
Long Delay Time I^4T	No	No	1-5 Seconds	1-5 Seconds	1-5 Seconds
Long Delay Thermal Memory	Yes	Yes	Yes	Yes	Yes
High Load Alarm	No	No	0.5-1.0 x I_r	0.5-1.0 x I_r	0.5-1.0 x I_r
Short Delay Protection (S)					
Short Delay Pickup	200-800% x (I_n)	200-800% x (I_n)	150-800% x (I_r)	150-800% x (I_r)	150-800% x (I_r)
Short Delay Time I^2T	100 ms	No	100-500 ms	100-500 ms	100-500 ms
Short Delay Time Flat	No	Inst-300 ms	100-500 ms	100-500 ms	100-500 ms
Short Delay Time Zone Selective Interlocking	No	No	No	Yes	Yes
Instantaneous Protection (I)					
Instantaneous Pickup	No	200-800% x (I_n)	200-800% x (I_n)	200-800% x (I_n)	200-800% x (I_n)
Discriminator	No	No	Yes	Yes	Yes
Instantaneous Override	Yes	Yes	Yes	Yes	Yes
Ground Fault Protection (G)					
Ground Fault Alarm	No	No	20-100% x (I_s)	20-100% x (I_s)	20-100% x (I_s)
Ground Fault Pickup	Varies by Frame	Varies by Frame	20-100% x (I_s)	20-100% x (I_s)	20-100% x (I_s)
Ground Fault Delay I^2T	No	No	100-500 ms	100-500 ms	100-500 ms
Ground Fault Delay Flat	Inst-500 ms	Inst-500 ms	100-500 ms	100-500 ms	100-500 ms
Ground Fault Zone Selective Interlocking	No	No	No	Yes	Yes
Ground Fault Thermal Memory	Yes	Yes	Yes	Yes	Yes
System Diagnostics					
Status LEDs	Yes	Yes	Yes	Yes	Yes
Cause of Trip LEDs	No	No	Yes	Yes	Yes
Magnitude of Trip Information	No	No	Yes	Yes	Yes
Remote Signal Contact – Ground Alarm	Yes	Yes	No	Yes	Yes
Local Auxiliary and Bell Alarm Contact	Optional	Optional	Optional	Included	Included
System Monitoring					
Digital Display	No	No	Yes②	Yes②	Yes②
Current	No	No	Yes	Yes	Yes
Power and Energy	No	No	No	No	Yes
Power Quality-Harmonics	No	No	No	No	Yes
Power Factor	No	No	No	No	Yes
Communications					
Cutler-Hammer PowerNet	No	No	No③	Yes	Yes
Testing					
Testing Method	Test Set		OPTIMizer, BIM, Cutler-Hammer PowerNet		

① Adjust by rating plug.
② By OPTIMizer/BIM.
③ Cutler-Hammer PowerNet kit for field upgrade.

BIM = Breaker Interface Module
(A) = GF Alarm

I_s = Sensor Rating
I_n = Rating Plug
I_r = Long Delay Pickup Setting

Types LD, HLD, and LDC Thermal-Magnetic Circuit Breakers with Interchangeable Trip Units

Maximum Continuous Ampere Rating @ 40°C	Standard Interrupting Capacity 600 Vac Rated 35 kAIC @ 480 Vac		High Interrupting Capacity 600 Vac Rated 65 kAIC @ 480 Vac		Ultra High Interrupting Capacity Current Limiting 600 Vac Rated 100 kAIC @ 480 Vac		Thermal Magnetic Trip Unit Only For Use With: Standard or High or Ultra High Interrupting Frames Magnetic Trip Range is 5-10 x Continuous Ampere Rating	Standard Terminals Only See Page 63 for Optional Terminals
	Factory Assembled Circuit Consisting of Frame, Trip Unit, and Terminals	Frame Only	Factory Assembled Circuit Consisting of Frame, Trip Unit, and Terminals	Frame Only	Factory Assembled Circuit Consisting of Frame, Trip Unit, and Terminals	Frame Only		
	Catalog Number							
2-Pole								
300	LD2300	LD2600F	HLD2300	HLD2600F	LDC2300	LDC2600F	LT2300T	TA602LD①
350	LD2350		HLD2350		LDC2350		LT2350T	TA602LD①
400	LD2400		HLD2400		LDC2400		LT2400T	TA602LD①
450	LD2450		HLD2450		LDC2450		LT2450T	TA602LD①
500	LD2500		HLD2500		LDC2500		LT2500T	TA602LD①
600	LD2600		HLD2600		LDC2600		LT2600T	2TA603LDK②
3-Pole								
300	LD3300	LD3600F	HLD3300	HLD3600F	LDC3300	LDC3600F	LT3300T	TA602LD①
350	LD3350		HLD3350		LDC3350		LT3350T	TA602LD①
400	LD3400		HLD3400		LDC3400		LT3400T	TA602LD①
450	LD3450		HLD3450		LDC3450		LT3450T	TA602LD①
500	LD3500		HLD3500		LDC3500		LT3500T	TA602LD①
600	LD3600		HLD3600		LDC3600		LT3600T	3TA603LDK②
4-Pole③								
300	LD4300	LD4600F	HLD4300	HLD4600F	LDC4300	LDC4600F	LT4300T	TA602LD①
350	LD4350		HLD4350		LDC4350		LT4350T	TA602LD①
400	LD4400		HLD4400		LDC4400		LT4400T	TA602LD①
450	LD4450		HLD4450		LDC4450		LT4450T	TA602LD①
500	LD4500		HLD4500		LDC4500		LT4500T	TA602LD①
600	LD4600		HLD4600		LDC4600		LT4600T	4TA603LDK②

Instruction Leaflet/FRED Number 29C105 for Breaker; 29C607 for Thermal Magnetic Trip Unit

Types LD, HLD, and LDC Electronic Circuit Breakers with Interchangeable Trip Units

Order as individual components: Breaker Frame, Trip Unit, Rating Plug, Terminals.

Maximum Continuous Ampere Rating @ 40°C①	Circuit Breaker Frame Only			Digitrip RMS 310 Trip Unit Only④				Digitrip RMS 310 Rating Plug Only			Standard Terminals Only See Page 63 for Optional Terminals
	Standard Interrupting Capacity 600 Vac Rated 35 kAIC @ 480 Vac	High Interrupting Capacity 600 Vac Rated 65 kAIC @ 480 Vac	Ultra High Interrupting Capacity Current Limiting 600 Vac Rated 100 kAIC @ 480 Vac	L – Adjustable Long Delay Pickup (By Adjustable Rating Plug) S – Adjustable Short Delay Pickup with Fixed Short Delay Time (I^2t Response) or Adjustable Short Delay Time (Flat Response) I – Adjustable Instantaneous Pickup by Setting Short Delay Time to Instantaneous G – Adjustable Ground Fault Pickup with Adjustable Ground Fault Delay (Flat Response)				Ampere Rating	Fixed Rating Plug	Adjustable Rating Plug Ampere Rating Catalog Number	
	Catalog Number										
3-Pole③											
600	LD3600F	HLD3600F	LDC3600F	LES3600LS	LES3600LSI	LES3600LSG	LES3600LSIG	300 350 400 500 600	6LES300T 6LES350T 6LES400T 6LES500T 6LES600T	300/400/500/600 A6LES600T1	TA602LD① TA602LD① TA602LD① TA602LD① 3TA603LDK②
4-Pole③											
600	LD4600F	HLD4600F	LDC4600F	LES4600LS	LES4600LSI	–	–	300 350 400 500 600	6LES300T 6LES350T 6LES400T 6LES500T 6LES600T	300/400/500/600 A6LES600T1	TA602LD④ TA602LD④ TA602LD④ TA602LD④ 4TA603LDK②

Instruction Leaflet/FRED Number 29C105 for Breaker; 29C615 for LES Trip Unit

① Individually packed.
② Terminal kits contain one terminal for each pole and one terminal cover.
③ Neutral is in right pole.
④ For AC use only.

100% Rated Types CLD, CHLD, and CLDC Electronic Circuit Breakers with Interchangeable Trip Units

The NEC allows the breaker to be rated at 100% of its frame size in an assembly, provided that 90°C wire is applied at the 75°C ampacity. All 100% rated circuit breakers have electronic trip units. Order as individual components: Breaker Frame, Trip Unit, Rating Plug and Terminals.

Maximum Continuous Ampere Rating @ 40°C①	Circuit Breaker Frame Only			Digitrip RMS 310 Trip Unit Only				Digitrip RMS 310 Rating Plug Only			Standard Terminals Only
	Standard Interrupting Capacity 600 Vac Rated 35 kAIC @ 480 Vac	High Interrupting Capacity 600 Vac Rated 65 kAIC @ 480 Vac	Ultra High Interrupting Capacity Current Limiting 600 Vac Rated 100 kAIC @ 480 Vac	Standard	Options			Ampere Rating	Fixed Rating Plug	Adjustable Rating Plug	See Page 63 for Optional Terminals
				Adjustable Short Time Delay with I^2t Short Delay Ramp	Independently Adjustable Short Time Pickup and Delay Ground Fault Protection	Adjustable Short Time Pickup with I^2t Short Delay and Ground Fault Protection	Independently Adjustable Short Time Pickup and Delay and Ground Fault Protection			Ampere Rating Catalog Number	
	Catalog Number										
3-Pole											
600	CLD3600F	CHLD3600F	CLDC3600F	LES3600LS	LES3600LSI	LES3600LSG	LES3600LSIG	300 350 400 500 600	6LES300T 6LES350T 6LES400T 6LES500T 6LES600T	300/400/500/600 A6LES600T1	TA602LD② TA602LD② TA602LD② TA602LD② 3TA603LDK③

Instruction Leaflet/FRED Number 29C105 for Breaker; 29C615 for LES Trip Unit

Type LDB Thermal-Magnetic Circuit Breakers with Non-Interchangeable Trip Units

Maximum Continuous Ampere Rating	600 Vac Rated, 250 Vdc	
	Complete Circuit Breaker	
	Without Line and Load Terminals	With Standard Line and Load Terminals Only
	Catalog Number	
2-Pole		
300	LDB2300W	LDB2300
350	LDB2350W	LDB2350
400	LDB2400W	LDB2400
450	LDB2450W	LDB2450
500	LDB2500W	LDB2500
600	LDB2600W	LDB2600
3-Pole		
300	LDB3300W	LDB3300
350	LDB3350W	LDB3350
400	LDB3400W	LDB3400
450	LDB3450W	LDB3450
500	LDB3500W	LDB3500
600	LDB3600W	LDB3600

Instruction Leaflet/FRED Number 29C105 for Breaker

Molded Case Switches

Molded case switches are used as compact switches in applications requiring high current switching capabilities. Molded case switches are constructed of circuit breaker components and are of the high instantaneous automatic type.④ Molded case switches are listed in accordance with Underwriters Laboratories, Inc., Standard UL 1087.

Maximum Continuous Ampere Rating @ 40°C	600 Vac Maximum, 250 Vdc	Standard Terminals Only
	Circuit Breaker Only Without Line and Load Terminals	See Page 63 for Optional Terminals
	Catalog Number	
2-Pole		
600	LD2600WK	2TA603LDK
3-Pole		
600	LD3600WK	3TA603LDK
4-Pole		
600	LD4600WK	4TA603LDK

Note: Molded Case Switch may trip above 6000 amperes.

Instruction Leaflet/FRED Number 29C105 for Molded Case Switch

① Ampere rating is established by rating plug.
② Individually packed.
③ 3TA603LDK and 4TA603LDK terminal kits contain one terminal for each pole and one terminal cover.

Digitrip OPTIM① Electronic Circuit Breaker with Interchangeable Rating Plug

Order as individual components: Breaker Frame (which includes Trip Unit), Rating Plug, Terminals.

Maximum Continuous Ampere Rating @ 40°C	Circuit Breaker Frame Only							Digitrip OPTIM Rating Plug Only	
	L – Adjustable Long Delay Pickup (I_r) with Adjustable Long Delay Time (I^2t or I^4t Response)② S – Adjustable Short Delay Pickup with Adjustable Short Delay Time (I^2t or Flat Response) I – Adjustable Instantaneous Pickup G – Adjustable Ground Fault Pickup with Adjustable Ground Fault Time (I^2t or Flat Response) A – Adjustable Ground Fault Alarm with Adjustable Ground Fault Time (I^2t or Flat Response)							Ampere Rating	Fixed Rating Plug
	OPTIM 550			OPTIM 750		OPTIM 1050			
	LSI	LSIG	LSIA	LSIG	LSIA	LSIG	LSIA		
	Catalog Number								
3-Pole Standard Interrupting Capacity 600 Volt Ac Rated 35 kAIC @ 480 Vac									
125	–	–	–	LD3125T76W	LD3125T77W	LD3125T106W	LD3125T107W	70 90 100 110 125	ORPL125A070 ORPL125A090 ORPL125A100 ORPL125A110 ORPL125A125
250	–	–	–	LD3250T76W	LD3250T77W	LD3250T106W	LD3250T107W	125 150 175 200 225 250	ORPL025A125 ORPL025A150 ORPL025A175 ORPL025A200 ORPL025A225 ORPL025A250
400	LD3400T52W	LD3400T56W	LD3400T57W	LD3400T76W	LD3400T77W	LD3400T106W	LD3400T107W	200 225 250 300 350 400	ORPL40A200 ORPL40A225 ORPL40A250 ORPL40A300 ORPL40A350 ORPL40A400
600	LD3600T52W	LD3600T56W	LD3600T57W	LD3600T76W	LD3600T77W	LD3600T106W	LD3600T107W	300 350 400 500 600	ORPL60A300 ORPL60A350 ORPL60A400 ORPL60A500 ORPL60A600
3-Pole High Interrupting Capacity 600 Volt Ac Rated 65 kAIC @ 480 Vac									
125	–	–	–	HLD3125T76W	HLD3125T77W	HLD3125T106W	HLD3125T107W	70 90 100 110 125	ORPL125A070 ORPL125A090 ORPL125A100 ORPL125A110 ORPL125A125
250	–	–	–	HLD3250T76W	HLD3250T77W	HLD3250T106W	HLD3250T107W	125 150 175 200 225 250	ORPL025A125 ORPL025A150 ORPL025A175 ORPL025A200 ORPL025A225 ORPL025A250
400	HLD3400T52W	HLD3400T56W	HLD3400T57W	HLD3400T76W	HLD3400T77W	HLD3400T106W	HLD3400T107W	200 225 250 300 350 400	ORPL40A200 ORPL40A225 ORPL40A250 ORPL40A300 ORPL40A350 ORPL40A400
600	HLD3600T52W	HLD3600T56W	HLD3600T57W	HLD3600T76W	HLD3600T77W	HLD3600T106W	HLD3600T107W	300 350 400 500 600	ORPL60A300 ORPL60A350 ORPL60A400 ORPL60A500 ORPL60A600

Instruction Leaflet/FRED Number 29C105 for Breaker; 29C891 for OPTIM Trip Unit

① One Form C auxiliary switch and one Form C bell alarm switch supplied with breaker as standard, on models 750 and 1050.

② Long delay I^4t response selection limits short delay time to flat response.

Digitrip OPTIM① Electronic Circuit Breaker with Interchangeable Rating Plug

Order as individual components: Breaker Frame (which includes Trip Unit), Rating Plug, Terminals.

Maximum Continuous Ampere Rating @ 40°C	Circuit Breaker Frame Only							Digitrip OPTIM Rating Plug Only	
	L – Adjustable Long Delay Pickup (I_r) with Adjustable Long Delay Time (I^2t or I^4t Response)② S – Adjustable Short Delay Pickup with Adjustable Short Delay Time (I^2t or Flat Response) I – Adjustable Instantaneous Pickup G – Adjustable Ground Fault Pickup with Adjustable Ground Fault Time (I^2t or Flat Response) A – Adjustable Ground Fault Alarm with Adjustable Ground Fault Time (I^2t or Flat Response)							Ampere Rating	Fixed Rating Plug
	OPTIM 550			OPTIM 750		OPTIM 1050			
	LSI	LSIG	LSIA	LSIG	LSIA	LSIG	LSIA		
	Catalog Number								
3-Pole Ultra High Interrupting Capacity Current Limiting 600 Volt Ac Rated 100 kAIC @ 480 Vac									
125	–	–	–	LDC3125T76W	LDC3125T77W	LDC3125T106W	LDC3125T107W	70 90 100 110 125	ORPL125A070 ORPL125A090 ORPL125A100 ORPL125A110 ORPL125A125
250	–	–	–	LDC3250T76W	LDC3250T77W	LDC3250T106W	LDC3250T107W	125 150 175 200 225 250	ORPL025A125 ORPL025A150 ORPL025A175 ORPL025A200 ORPL025A225 ORPL025A250
400	LDC3400T52W	LDC3400T56W	LDC3400T57W	LDC3400T76W	LDC3400T77W	LDC3400T106W	LDC3400T107W	200 225 250 300 350 400	ORPL40A200 ORPL40A225 ORPL40A250 ORPL40A300 ORPL40A350 ORPL40A400
600	LDC3600T52W	LDC3600T56W	LDC3600T57W	LDC3600T76W	LDC3600T77W	LDC3600T106W	LDC3600T107W	300 350 400 500 600	ORPL60A300 ORPL60A350 ORPL60A400 ORPL60A500 ORPL60A600

Instruction Leaflet/FRED Number 29C105 for Breaker; 29C891 for OPTIM Trip Unit

① One Form C auxiliary switch and one Form C bell alarm switch supplied with breaker as standard, on models 750 and 1050.

② Long delay I^4t response selection limits short delay time to flat response.

100% Rated Digitrip OPTIM① Circuit Breakers with Interchangeable Rating Plug

Order as individual components: Breaker Frame (which includes Trip Unit), Rating Plug, Terminals.

Maximum Continuous Ampere Rating @ 40°C	Circuit Breaker Frame Only							Digitrip OPTIM Rating Plug Only	
	L – Adjustable Long Delay Pickup (I_r) with Adjustable Long Delay Time (I^2t or I^4t Response)② S – Adjustable Short Delay Pickup with Adjustable Short Delay Time (I^2t or Flat Response) I – Adjustable Instantaneous Pickup G – Adjustable Ground Fault Pickup with Adjustable Ground Fault Time (I^2t or Flat Response) A – Adjustable Ground Fault Alarm with Adjustable Ground Fault Time (I^2t or Flat Response)							Ampere Rating	Fixed Rating Plug
	OPTIM 550			OPTIM 750		OPTIM 1050			
	LSI	LSIG	LSIA	LSIG	LSIA	LSIG	LSIA		
	Catalog Number								
3-Pole Standard Interrupting Capacity 600 Volt Ac Rated 35 kAIC @ 480 Vac									
125	–	–	–	CLD3125T76W	CLD3125T77W	CLD3125T106W	CLD3125T107W	70 90 100 110 125	ORPL125A07 ORPL125A09 ORPL125A10 ORPL125A11 ORPL125A125
250	–	–	–	CLD3250T76W	CLD3250T77W	CLD3250T106W	CLD3250T107W	125 150 175 200 225 250	ORPL025A12 ORPL025A15 ORPL025A17 ORPL025A20 ORPL025A22 ORPL025A250
400	CLD3400T52W	CLD3400T56W	CLD3400T57W	CLD3400T76W	CLD3400T77W	CLD3400T106W	CLD3400T107W	200 225 250 300 350 400	ORPL40A200 ORPL40A225 ORPL40A250 ORPL40A300 ORPL40A350 ORPL40A400
600	CLD3600T52W	CLD3600T56W	CLD3600T57W	CLD3600T76W	CLD3600T77W	CLD3600T106W	CLD3600T107W	300 350 400 500 600	ORPL60A300 ORPL60A350 ORPL60A400 ORPL60A500 ORPL60A600
3-Pole High Interrupting Capacity 600 Volt Ac Rated 65 kAIC @ 480 Vac									
125	–	–	–	CHLD3125T76W	CHLD3125T77W	CHLD3125T106W	CHLD3125T107W	70 90 100 110 125	ORPL125A070 ORPL125A090 ORPL125A100 ORPL125A110 ORPL125A125
250	–	–	–	CHLD3250T76W	CHLD3250T77W	CHLD3250T106W	CHLD3250T107W	125 150 175 200 225 250	ORPL025A125 ORPL025A150 ORPL025A175 ORPL025A200 ORPL025A225 ORPL025A250
400	CHLD3400T52W	CHLD3400T56W	CHLD3400T57W	CHLD3400T76W	CHLD3400T77W	CHLD3400T106W	CHLD3400T107W	200 225 250 300 350 400	ORPL40A200 ORPL40A225 ORPL40A250 ORPL40A300 ORPL40A350 ORPL40A400
600	CHLD3600T52W	CHLD3600T56W	CHLD3600T57W	CHLD3600T76W	CHLD3600T77W	CHLD3600T106W	CHLD3600T107W	300 350 400 500 600	ORPL60A300 ORPL60A350 ORPL60A400 ORPL60A500 ORPL60A600

Instruction Leaflet/FRED Number 29C105 for Breaker; 29C891 for OPTIM Trip Unit

① One Form C auxiliary switch and one Form C bell alarm switch supplied with breaker as standard, on models 750 and 1050.
② Long delay I^4t response selection limits short delay time to flat response.

100% Rated Digitrip OPTIM① Electronic Circuit Breaker with Interchangeable Rating Plug

Order as individual components: Breaker Frame (which includes Trip Unit), Rating Plug, Terminals.

Maximum Continuous Ampere Rating @ 40°C	Circuit Breaker Frame Only							Digitrip OPTIM Rating Plug Only	
	L – Adjustable Long Delay Pickup (I_r) with Adjustable Long Delay Time (I^2t or I^4t Response)② S – Adjustable Short Delay Pickup with Adjustable Short Delay Time (I^2t or Flat Response) I – Adjustable Instantaneous Pickup G – Adjustable Ground Fault Pickup with Adjustable Ground Fault Time (I^2t or Flat Response) A – Adjustable Ground Fault Alarm with Adjustable Ground Fault Time (I^2t or Flat Response)							Ampere Rating	Fixed Rating Plug
	OPTIM 550			OPTIM 750		OPTIM 1050			
	LSI	LSIG	LSIA	LSIG	LSIA	LSIG	LSIA		
	Catalog Number								
3-Pole Ultra High Interrupting Capacity Current Limiting 600 Volt Ac Rated 100 kAIC @ 480 Vac									
125	–	–	–	CLDC3125T76W	CLDC3125T77W	CLDC3125T106W	CLDC3125T107W	70 90 100 110 125	ORPL125A070 ORPL125A090 ORPL125A100 ORPL125A110 ORPL125A125
250	–	–	–	CLDC3250T76W	CLDC3250T77W	CLDC3250T106W	CLDC3250T107W	125 150 175 200 225 250	ORPL025A125 ORPL025A150 ORPL025A175 ORPL025A200 ORPL025A225 ORPL025A250
400	CLDC3400T52W	CLDC3400T56W	CLDC3400T57W	CLDC3400T76W	CLDC3400T77W	CLDC3400T106W	CLDC3400T107W	200 225 250 300 350 400	ORPL40A200 ORPL40A225 ORPL40A250 ORPL40A300 ORPL40A350 ORPL40A400
600	CLDC3600T52W	CLDC3600T56W	CLDC3600T57W	CLDC3600T76W	CLDC3600T77W	CLDC3600T106W	CLDC3600T107W	300 350 400 500 600	ORPL60A300 ORPL60A350 ORPL60A400 ORPL60A500 ORPL60A600

Instruction Leaflet/FRED Number 29C105 for Breaker; 29C891 for OPTIM Trip Unit

① One Form C auxiliary switch and one Form C bell alarm switch supplied with breaker as standard, on models 750 and 1050.

② Long delay I^4t response selection limits short delay time to flat response.

Line and Load Terminals

Line and load terminals provide wire connecting capabilities for specific ranges of continuous current ratings and wire types. All terminals comply with Underwriters Laboratories, Inc., Standards UL486A and UL486B and CSA Standard C22.2 No. 65M. Unless otherwise specified, L-frame circuit breaker line and load terminals are shipped separately for field installation.

The wire connecting terminal is secured with two pan-head, slotted screws and lock washers which can be checked for the correct torque loading or retightened from the front of the circuit breaker before installation of the conductors. (Applies to all styles.) The circuit breaker line/load terminal conductors are positioned in the conducting holes in the wire connecting terminal and are secured with recessed socket screws which are tightened to the correct torque loading from the front of the circuit breaker.

Ordering Information

L-frame circuit breakers use Cu/Al terminals as standard. When optional copper terminals are required, order by catalog number. Specify if factory installation is required.

Line and Load Terminals

Maximum Breaker Amperes	Terminal Body Material	Wire Type	AWG Wire Range/ Number of Conductors	Metric Wire Range mm^2	Terminal Catalog Number	Terminals with Control Wire Termination Catalog Numbers
Standard Cu/Al Pressure Terminals						
400	Aluminum	Cu/Al	4/0-600 (1)	120-300	**2TA401LDK**– 2-Pole Kit①	–
					3TA401LDK– 3-Pole Kit①	–
					4TA401LDK– 4-Pole Kit①	–
450	Aluminum	Cu/Al	4-4/0 (2)	25-95	**TA450LD**②	–
500	Aluminum	Cu/Al	3/0-350 (2)	95-150	**TA602LD**②	**TA602LDCW**
600	Aluminum	Cu/Al	400-500 (2)	185-240	**2TA603LDK**– 2-Pole Kit①	**2TA602LDKW**
					3TA603LDK– 3-Pole Kit①	**3TA602LDKW**
					4TA603LDK– 4-Pole Kit①	**4TA602LDKW**
Optional Copper and Cu/Al Pressure Type Terminals						
600	Copper	Cu	250-500 (2)	120-250	**T602LD**②	–

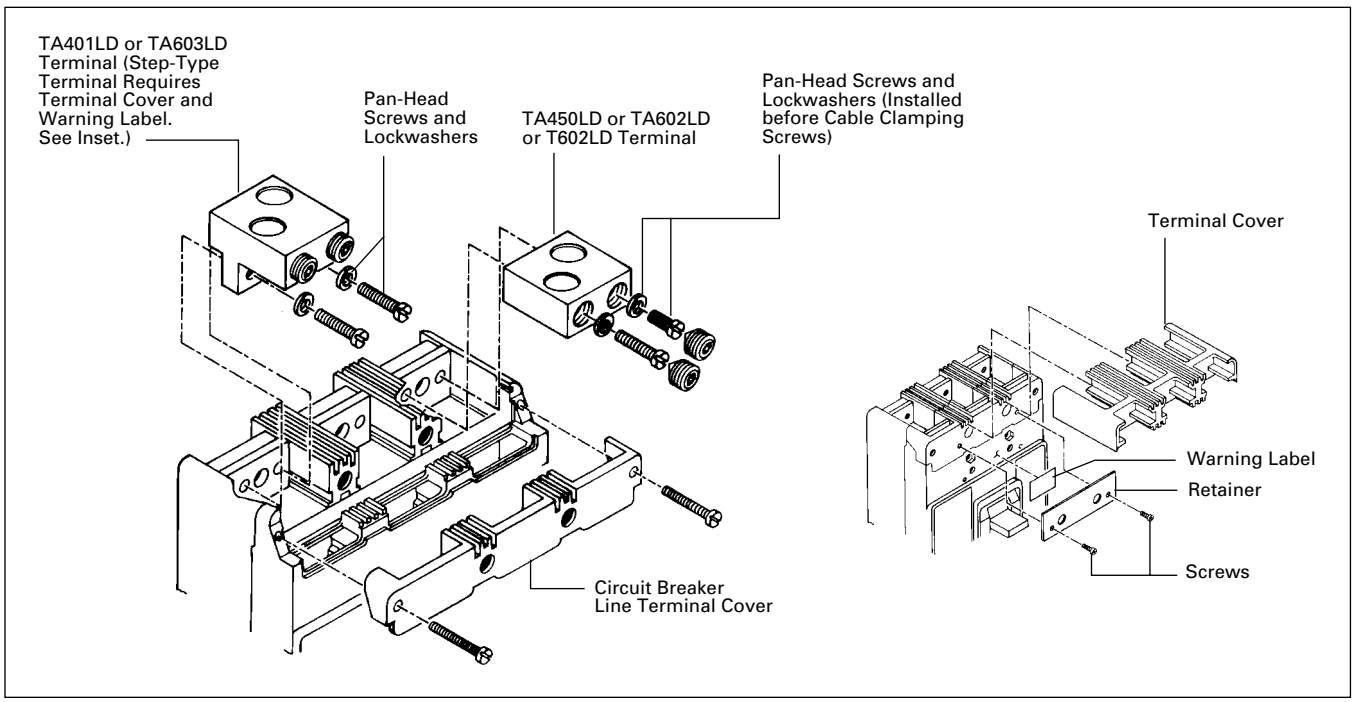

① Terminal kits contain one terminal for each pole and one terminal cover.
② Individually packed.

Catalog Numbering System

This information is presented only as an aid to understanding catalog numbers. It is not to be used to build catalog numbers for circuit breakers or trip units.

Circuit Breaker/Frame Catalog Number

LD 3 600 F

Circuit Breaker/ Frame Type	Number of Poles	Circuit Breaker/ Frame Ampere Rating	Suffix
LDB LD HLD LDC CLD CHLD CLDC	2: 2 Poles 3: 3 Poles 4: 4 Poles	300 350 400 450 500 600	C: Copper Terminals F: Frame Only K: High Magnetic Molded Case Switch V: 50°C (Thermal-Magnetic Trip Units Only) W: Without Terminals X: Load Side Terminals Only Y: Line Side Terminals Only

Thermal-Magnetic Trip Unit Catalog Number

LT 3 400 T

Trip Unit Type	Number of Poles	Trip Unit/ Rating Plug Ampere Rating	Suffix
LT: Thermal-Magnetic	2: 2 Poles 3: 3 Poles 4: 4 Poles	300 350 400 450 500 600	T: Trip Unit Thermal-Magnetic Fixed Thermal Adjustable Magnetic V: 50°C Calibration (Thermal-Magnetic Trip Units Only)

OPTIM Circuit Breaker/Frame Catalog Number

LD 3 125 T5 7 W

Circuit Breaker/ Frame Type	Number of Poles	Circuit Breaker/ Frame Ampere Rating	Trip Model	Trip Type	Suffix
LD HLD LDC CLD CHLD CLDC	3: 3 Poles	125 (Available on Model 750 and 1050 only) 250 (Available on Model 750 and 1050 only) 400 600	T5 – Model 550 T7 – Model 750 T10 – Model 1050	2 – LSI (550 only) 6 – LSIG 7 – LSIA	W: Without Terminals

Digitrip RMS 310 Trip Unit Catalog Number

LES 3 600 LS P

Trip Unit Type	Number of Poles	Trip Unit Ampere Rating	Suffix	Suffix
LES: Electronic	3: 3 Poles 4: 4 Poles	600	LS LSI LSG LSIG	P: 100% Protected Neutral on 4-Pole Trip Unit

Dimensions/Weights

Dimensions, Inches (mm)

Number of Poles	Width	Height	Depth
2, 3	8.25 (210)	10.75 (274)	4.062 (103)
4	11 (279)	10.75 (274)	4.062 (103)

Approximate Shipping Weight, Lbs. (kg)

Breaker Type	Complete Breaker			Frame Only			Trip Unit		
	Number of Poles								
	2	3	4	2	3	4	2	3	4
LD, HLD, LDC	18 (8.172)	20 (9.080)	25 (11.340)	14 (6.356)	15 (6.810)	20 (9.072)	3 (1.361)	4 (1.814)	5 (2.268)
LDB	18 (8.172)	20 (9.080)	25 (11.340)	–	–	–	–	–	–

Allowable Accessory Combinations

Different combinations of accessories can be supplied, depending on the types of accessories and the number of poles in the circuit breaker.

	Reference Page		2-Pole①, 3-Pole				4-Pole			
			Left	Center	Right		Left	Center	Right	Neu.②
Internal Accessories (Only One Internal Accessory Per Pole)③										
Alarm Lockout (Make/Break)	140		■		■		■		■	
Alarm Lockout (2Make/2Break)	140		■		■		■		■	
Auxiliary Switch (1A, 1B)	143		■		■		■		■	
Auxiliary Switch (2A, 2B)	143		■		■		■		■	
Auxiliary Switch (3A, 3B)	143		■		■		■		■	
Auxiliary Switch (1A, 1B) and Alarm Switch Combination	146		■		■		■		■	
Auxiliary Switch (2A, 2B) and Alarm Switch Combination	146		■		■		■		■	
Shunt Trip – Standard④	149		■		■		■		■	
Shunt Trip – Low Energy④	152		■		■		■		■	
Undervoltage Release Mechanism④	157		■		■		■		■	
Cutler-Hammer PowerNet Communications Kit (OPTIM 550)	160				■					
External Accessories										
End Cap Kit	161			●				●		
Control Wire Terminal Kit	162			●				●		
Base Mounting Hardware	163			●				●		
Terminal Shields	165			●				●		
Interphase Barriers	166			●				●		
Non-Padlockable Handle Block	168			■				■		
Padlockable Handle Lock Hasp	169		❑		❑		❑		❑	
Key Interlock Kit	170		❑		❑		❑		❑	
Sliding Bar Interlock – Requires Two Breakers	171			●						
Walking Beam Interlock – Requires Two Breakers	171			●				●		
Electrical (Motor) Operator	173			●				●		
Plug-in Adapters	174			●				●		
Rear Connecting Studs	176			●				●		
Panelboard Connecting Straps	177			●				●		
Handle Mechanisms	178			●				●		
Door Hardware/Accessories	182			●				●		
Handle Extension	182			●				●		
Solid-State (Electronic) Portable Test Kit	184			●				●		
OPTIM System Components 3-Poles										
Ground Fault Alarm Unit	184									
Potential Transformer Module	184									
Breaker Interface Module (BIM)	185									
Digitrip OPTIMizer	185									
Auxiliary Power Module	185									
Cutler-Hammer PowerNet Software	185									
Modifications (Refer to Cutler-Hammer)										
Special Calibration	186			●				●		
Moisture Fungus Treatment	186			●				●		
Freeze-Tested Circuit Breakers	186			●				●		
Marine Application	186			●				●		

■ Applicable in indicated pole position

❑ May be mounted on left or right pole – not both

● Accessory available/Modification available

① 2-pole breaker supplied in 3-pole frame. Current carrying parts omitted from center pole.
② Refer to Cutler-Hammer for appropriate neutral pole accessory combinations.
③ OPTIM models 750 and 1050 are factory sealed and do not have the right pole space available for accessories.
④ Shunt trip and UVR cannot be mounted in right poles on LES trip units.

Typical Series C M-Frame Circuit Breaker

- All Series C M-frame circuit breakers are HACR rated.
- MDL-frame circuit breakers are available as individual components (Frame, Trip Unit, Terminals), or factory assembled complete breakers.
- M-frame circuit breakers with non-interchangeable trip units are suitable for reverse feed use.

Interrupting Capacity Ratings

UL489/CSA Interrupting Capacity Ratings①

Circuit Breaker Type	Number of Poles	Interrupting Capacity (Symmetrical Amperes) (kA)				Page Number
		Volts Ac (50/60 Hz)			Volts Dc②③	
		240	480	600	250	
MDL	2, 3	65	50	25	22	69, 70
CMDL	2, 3	65	50	25	22	70
HMDL	2, 3	100	65	35	25	69, 70
CHMDL	2, 3	100	65	35	25	70

IEC 947-2 Interrupting Capacity Ratings①

Circuit Breaker Type	Number of Poles	Interrupting Capacity – RMS Symmetrical Amperes (kA) $I_{CU} = I_{CS}$				Page Number
		Volts Ac (50/60 Hz)			Volts Dc②③	
		240	480	600	250	
MDL	2, 3	85	50	20	20	69, 70
CMDL	2, 3	85	50	20	20	70
HMDL	2, 3	100	65	25	20	69, 70
CHMDL	2, 3	100	65	25	20	70

① Utilization category A circuit breakers.
② Two poles or two poles of 3-pole circuit breaker. Thermal-magnetic trip units only, MDL, HMDL breakers with electronic trip unit are not DC rated.
③ Time constant is 3 milliseconds minimum at 10 kA and 8 milliseconds at 22 kA.

MDL-Frame Digitrip Selection Guide

Trip Unit Type	Digitrip RMS 310	
RMS Sensing	Yes	
Breaker Type		
Frame	MDL	
Ampere Range	400-800A	
Interrupting Rating @ 480V	50, 65 (kA)	
Protection		
Ordering Options	LS, LSG	LSI, LSIG
Fixed Rated Plug (I_n)	Yes	Yes
Overtemperature Trip	Yes	Yes
Long Delay Protection (L)		
Adjustable Rating Plug (I_n)	Yes	Yes
Long Delay Pickup	0.5-1.0 (I_n) ①	0.5-1.0 (I_n) ①
Long Delay Time I^2T	12 Seconds	12 Seconds
Long Delay Time I^4T	No	No
Long Delay Thermal Memory	Yes	Yes
High Load Alarm	No	No
Short Delay Protection (S)		
Short Delay Pickup	200-800% x (I_n)	200-800% x (I_n)
Short Delay Time I^2T	100 ms	No
Short Delay Time Flat	No	Inst-300 ms
Short Delay Time Zone Selective Interlocking	No	No
Instantaneous Protection (I)		
Instantaneous Pickup	No	200-800% x (I_n)
Discriminator	No	No
Instantaneous Override	Yes	Yes
Ground Fault Protection (G)		
Ground Fault Alarm	No	No
Ground Fault Pickup	Varies by Frame	Varies by Frame
Ground Fault Delay I^2T	No	No
Ground Fault Delay Flat	Inst-500 ms	Inst-500 ms
Ground Fault Zone Selective Interlocking	No	No
Ground Fault Thermal Memory	Yes	Yes
System Diagnostics		
Status LEDs	Yes	Yes
Cause of Trip LEDs	No	No
Magnitude of Trip Information	No	No
Remote Signal Contacts – Ground Alarm	Yes	Yes
System Monitoring		
Digital Display	No	No
Current	No	No
Power and Energy	No	No
Power Quality – Harmonics	No	No
Power Factor	No	No
Communications		
Cutler-Hammer PowerNet	No	No
Testing		
Testing Method	Test Set	

① Adjust by rating plug.

I_n = Rating Plug

Types MDL and HMDL Thermal-Magnetic Circuit Breakers with Interchangeable Trip Units

Maximum Continuous Ampere Rating @ 40°C	Standard Interrupting Capacity 600 Vac Rated 50 kAIC @ 480 Vac		High Interrupting Capacity 600 Vac Rated 65 kAIC @ 480 Vac		Thermal Magnetic Trip Unit Only For Use With: Standard or High or Ultra High Interrupting Frames Magnetic Trip Range is 5-10 up through 600A; 4-8 on 700 and 800A x Continuous Ampere Rating	Standard Terminals Only ① See Page 72 for Optional Terminals
	Factory Assembled Circuit Consisting of Frame, Trip Unit, and Terminals	Frame Only	Factory Assembled Circuit Consisting of Frame, Trip Unit, and Terminals	Frame Only		
	Catalog Number					
2-Pole						
300	MDL2300	MDL2800F	HMDL2300	HMDL2800F	MT2300T	TA700MA1
350	MDL2350		HMDL2350		MT2350T	TA700MA1
400	MDL2400		HMDL2400		MT2400T	TA700MA1
450	MDL2450		HMDL2450		MT2450T	TA700MA1
500	MDL2500		HMDL2500		MT2500T	TA700MA1
600	MDL2600		HMDL2600		MT2600T	TA700MA1
700	MDL2700		HMDL2700		MT2700T	TA700MA1
800	MDL2800		HMDL2800		MT2800T	TA800MA2
3-Pole						
300	MDL3300	MDL3800F	HMDL3300	HMDL3800F	MT3300T	TA700MA1
350	MDL3350		HMDL3350		MT3350T	TA700MA1
400	MDL3400		HMDL3400		MT3400T	TA700MA1
450	MDL3450		HMDL3450		MT3450T	TA700MA1
500	MDL3500		HMDL3500		MT3500T	TA700MA1
600	MDL3600		HMDL3600		MT3600T	TA700MA1
700	MDL3700		HMDL3700		MT3700T	TA700MA1
800	MDL3800		HMDL3800		MT3800T	TA800MA2

Instruction Leaflet/FRED Number 29C111 for Breaker

Types MDLB and HMDLB Thermal-Magnetic Circuit Breakers with Non-Interchangeable Trip Units

Maximum Continuous Ampere Rating @ 40°C	Standard Interrupting Capacity 600 Vac Rated 50 kAIC @ 480 Vac	High Interrupting Capacity 600 Vac Rated 50 kAIC @ 480 Vac	Standard Terminals Only ① See Page 72 for Optional Terminals
	Factory Assembled Circuit Consisting of Frame, Trip Unit, and Terminals	Factory Assembled Circuit Consisting of Frame, Trip Unit, and Terminals	
	Catalog Number		
2-Pole			
300	MDLB2300	HMDLB2300	TA700MA1
350	MDLB2350	HMDLB2350	TA700MA1
400	MDLB2400	HMDLB2400	TA700MA1
450	MDLB2450	HMDLB2450	TA700MA1
500	MDLB2500	HMDLB2500	TA700MA1
600	MDLB2600	HMDLB2600	TA700MA1
700	MDLB2700	HMDLB2700	TA700MA1
800	MDLB2800	HMDLB2800	TA800MA2
3-Pole			
300	MDLB3300	HMDLB3300	TA700MA1
350	MDLB3350	HMDLB3350	TA700MA1
400	MDLB3400	HMDLB3400	TA700MA1
450	MDLB3450	HMDLB3450	TA700MA1
500	MDLB3500	HMDLB3500	TA700MA1
600	MDLB3600	HMDLB3600	TA700MA1
700	MDLB3700	HMDLB3700	TA700MA1
800	MDLB3800	HMDLB3800	TA800MA2

Instruction Leaflet/FRED Number 29C111 for Breaker

① Two terminals are required per pole.

Types MDL and HMDL Electronic Circuit Breakers with Interchangeable Trip Units

Order as Individual Components: Breaker Frame, Trip Unit, Rating Plug, Terminals.

Maximum Continuous Ampere Rating @ 40°C①	Circuit Breaker Frame Only		Digitrip RMS 310 Trip Unit Only②	Digitrip RMS 310 Rating Plug Only			Terminals
	Standard Interrupting Capacity 600 Vac Rated 35 kAIC @ 480 Vac	High Interrupting Capacity 600 Vac Rated 65 kAIC @ 480 Vac	L – Adjustable Long Delay Pickup (by Adjustable Rating Plug) S – Adjustable Short Delay Pickup with Fixed Short Delay Time (I^2t Response) or Adjustable Short Delay Time (Flat Response) I – Adjustable Instantaneous Pickup by Setting Short Delay Time to Instantaneous G – Adjustable Ground Fault Pickup with Adjustable Ground Fault Delay (Flat Response)	Ampere Rating	Fixed Rating Plug	Adjustable Rating Plugs Ampere Rating Catalog Number	
	Catalog Number						
3-Pole							
800	**MDL3800F**	**HMDL3800F**	**MES3800LS** **MES3800LSI** **MES3800LSG** **MES3800LSIG**	400 500 600 700 800	**8MES400T** **8MES500T** **8MES600T** **8MES700T** **8MES800T**	400/500/600/800 **A8MES800T**	See Page 72 for Standard and Optional Terminals

Instruction Leaflet/FRED Number 29C111 for Breaker; 29C615 for MES Trip Unit

Types MDLB and HMDLB Electronic Circuit Breakers with Non-Interchangeable Trip Units

Maximum Continuous Ampere Rating @ 40°C①	Factory Assembled Circuit Breaker Consisting of Frame and Trip Unit			
	LS	LSI	LSG	LSIG
	Catalog Number			
3-Pole Standard Interrupting Capacity 600 Vac Rated 50 kAIC @ 480 Vac				
800	**MDLB3800T33W**	**MDLB3800T32W**	**MDLB3800T35W**	**MDLB3800T36W**
3-Pole High Interrupting Capacity 600 Vac Rated 65 kAIC @ 480 Vac				
800	**HMDLB3800T33W**	**HMDLB3800T32W**	**HMDLB3800T35W**	**HMDLB3800T36W**

Instruction Leaflet/FRED Number 29C111 for Breaker; 29C615 for MES Trip Unit

100% Rated Types CMDL and CHMDL Electronic Circuit Breakers with Non-Interchangeable Trip Units

The NEC allows the breaker to be rated at 100% of its frame size in an assembly, provided that 90°C wire is applied at the 75°C ampacity. All 100% rated circuit breakers have electronic trip units. Order as individual components: breaker frame, trip unit, rating plug and terminals.

Maximum Continuous Ampere Rating @ 40°C①	Circuit Breaker Frame Only		Digitrip RMS 310 Trip Unit Only②				Digitrip RMS 310 Trip Unit Only			Terminals
	Standard Interrupting Capacity 50 kAIC @ 480 Vac	High Interrupting Capacity 50 kAIC @ 480 Vac	Standard	Options			Ampere Rating	Fixed Rating Plug	Adjustable Rating Plug	
			Adjustable Short Time Delay with I^2t Short Delay Ramp	Independently Adjustable Short Time Pickup and Delay Ground Fault Protection	Adjustable Short Time Pickup with I^2t Short Delay and Ground Fault Protection	Independently Adjustable Short Time Pickup and Ground Fault Protection			Ampere Rating Catalog Number	
	Catalog Number									
3-Pole										
800	**CMDL3800F**	**CHMDL3800F**	**MES3800LS**	**MES3800LSI**	**MES3800LSG**	**MES3800LSIG**	400 500 600 700 800	**8MES400T** **8MES500T** **8MES600T** **8MES700T** **8MES800T**	400/500/600/800 **A8MES800T**	See Page 72 for Standard and Optional Terminals

Instruction Leaflet/FRED Number 29C111 for Breaker; 29C615 for MES Trip Unit

① Ampere rating is established by rating plug.
② For Ac use only.

Molded Case Switches

Molded case switches are used as compact switches in applications requiring high current switching capabilities. Molded case switches are constructed of circuit breaker components and are of the high instantaneous automatic type. Molded case switches are listed in accordance with Underwriters Laboratories, Inc., Standard UL 1087.

Maximum Continuous Ampere Rating @ 40°C	600 Vac Maximum, 250 Vdc Circuit Breaker Only without Line and Load Terminals Catalog Number
2-Pole	
800	**MDL2800WK**
3-Pole	
800	**MDL3800WK**

Note: Molded case switch may trip above 6000 amperes.

Instruction Leaflet/FRED Number 29C111

Line and Load Terminals

M-Frame circuit breakers use Cu/Al terminals as standard. When optional copper or Cu/Al terminals are required, order by catalog number. Specify if factory installation is required.

Line and Load Terminals

Maximum Breaker Amperes	Terminal Body Material	Wire Type	AWG Wire Range/ No. Conductors	Terminal Catalog Number	Terminals with Control Wire Termination Catalog Number
Standard Cu/Al Pressure Terminals					
600	Aluminum	Cu/Al	(2) #1-500 kcmil	**TA700MA1**	**TA700MA1CWT**
800	Aluminum	Cu/Al	(3) 3/0-400 kcmil	**TA800MA2**	**TA800MA2CWT**
800	Aluminum	Cu/Al	(2) 500-750 kcmil	**TA801MA**	**TA801MACWT**
Optional Copper and Cu/Al Pressure Type Terminals					
600	Copper	Cu	(2) 2/0-500 kcmil	**T600MA1**	–
800	Copper	Cu	(3) 3/0-300 kcmil	**T800MA1**	–

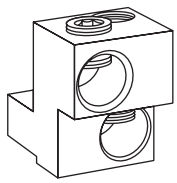

TA700MA1

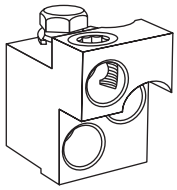

TA800MA2

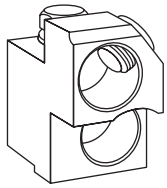

TA801MA1

Catalog Numbering System

This information is presented only as an aid to understanding catalog numbers. It is not to be used to build catalog numbers for circuit breakers or trip units.

Circuit Breaker/Frame Catalog Number

MDL 3 800 F

Circuit Breaker/ Frame Type	Number of Poles	Circuit Breaker/ Frame Ampere Rating	Suffix
MDL HMDL	2: 2 Poles 3: 3 Poles	300① 350① 400 450 500 600 700 800	F: Frame Only K: High Magnetic Molded Case Switch V: 50°C (Thermal-Magnetic Trip Units Only) W: Without Terminals X: Load Side Terminals Only Y: Line Side Terminals Only

Thermal-Magnetic Trip Unit Catalog Number

MT 3 800 T

Trip Unit Type	Number of Poles	Trip Unit/ Rating Plug Ampere Rating	Suffix
MT: MES:	2: 2 Poles 3: 3 Poles	300① 350① 400 450 500 600 700 800	T: Thermal-Magnetic V: 50°C (Thermal-Magnetic Trip Units Only) LS: Digitrip RMS 310 LSI: Digitrip RMS 310 LSG: Digitrip RMS 310 LSIG: Digitrip RMS 310

Dimensions/Weights

Dimensions, Inches (mm)

Number of Poles	Width	Height	Depth
2, 3	8.250 (210)	16.000 (406)	4.062 (103)

Approximate Shipping Weight, Lbs. (kg)

Breaker Type	Complete Breaker		Frame Only		Trip Unit①	
	Number of Poles					
	2	3	2	3	2	3
MDL, HMDL (T/M T.U.)	26.5	29	24.5	26	2.5	3
MDL, HMDL (Elec. T.U.)	–	30	–	26	–	4

① Thermal-Magnetic only.

Allowable Accessory Combinations

Different combinations of accessories can be supplied, depending on the types of accessories and the number of poles in the circuit breaker.

	Reference Page	2-Pole①			3-Pole			
		Left	Right		Left	Center	Right	
Internal Accessories (Only One Internal Accessory Per Pole)								
Alarm Lockout (Make/Break)	140	■			■		■	
Alarm Lockout (2Make/2Break)	140	■			■		■	
Auxiliary Switch (1A, 1B)	143	■			■		■	
Auxiliary Switch (2A, 2B)	143	■			■		■	
Auxiliary Switch (3A, 3B)	143	■			■		■	
Auxiliary Switch (1A, 1B) and Alarm Switch Combination	146	■			■		■	
Auxiliary Switch (2A, 2B) and Alarm Switch Combination	146	■			■		■	
Shunt Trip – Standard③	149	■			■		■	
Shunt Trip – Low Energy③	152	■			■		■	
Undervoltage Release Mechanism③	157	■			■		■	
External Accessories								
Base Mounting Hardware	163					●		
Terminal Shields	165					●		
Interphase Barriers	166					●		
Non-Padlockable Handle Block	168					■		
Padlockable Handle Lock Hasp	169	❑			❑		❑	
Key Interlock Kit	170	❑			❑		❑	
Sliding Bar Interlock – Requires Two Breakers	171	●			●			
Walking Beam Interlock – Requires Two Breakers	171	●			●			
Electrical (Motor) Operator	173	●			●			
Plug-in Adapters	174	●			●			
Rear Connecting Studs	176	●			●			
Panelboard Connecting Straps	177	●			●			
Handle Mechanisms	178	●			●			
Door Hardware/Accessories	182	●			●			
Handle Extension	182					●		
Solid-State (Electronic) Portable Test Kit	184	●			●			
Modifications (Refer to Cutler-Hammer)								
Special Calibration	186	●			●			
Moisture Fungus Treatment	186	●			●			
Freeze-Tested Circuit Breakers	186	●			●			
Marine Application	186	●			●			

■ Applicable in indicated pole position

❑ May be mounted on left or right pole – not both

● Accessory available/Modification available

① 2-pole breaker supplied in 3-pole frame. Current carrying parts omitted from center pole.
② Refer to Cutler-Hammer for appropriate neutral pole accessory combinations.
③ Shunt trip and UVR cannot be mounted in right poles on LES trip units.

Typical Series C N-Frame Circuit Breaker

- All N-frame circuit breakers are suitable for reverse feed use.

Interrupting Capacity Ratings

UL489 Interrupting Capacity Ratings①

Circuit Breaker Type	Number of Poles	Interrupting Capacity (Symmetrical Amperes) (kA) Volts Ac (50/60 Hz) 240	277	480	600	125	Page Number
ND	2, 3, 4	65	–	50	25	–	77, 83
CND②	2, 3, 4	65	–	50	25	–	80, 84
HND	2, 3, 4	100	–	65	35	–	78, 83
CHND②	2, 3, 4	100	–	65	35	–	81, 84
NDC	2, 3, 4	200	–	100	50	–	79, 83
CNDC②	2, 3, 4	200	–	100	50	–	82, 84

IEC 947-2 Interrupting Capacity Ratings①

Circuit Breaker Type	Number of Poles	Interrupting Capacity (Symmetrical Amperes) (kA) Volts Ac (50/60 Hz) 240	415	690	Page Number
ND	2, 3, 4				77, 83
I_{cu}		85	50	20	
I_{cs}		85	50	10	
CND②	2, 3, 4				80, 84
I_{cu}		85	50	20	
I_{cs}		85	50	10	
HND	2, 3, 4				78, 83
I_{cu}		100	70	25	
I_{cs}		100	50	13	
CHND②	2, 3, 4				81, 84
I_{cu}		100	70	25	
I_{cs}		100	50	13	
NDC	2, 3, 4				79, 83
I_{cu}		200	100	35	
I_{cs}		100	50	18	
CNDC②	2, 3, 4				82, 84
I_{cu}		200	100	35	
I_{cs}		100	50	18	

① Utilization Category A circuit breakers.
② 100% rated breakers.

N-Frame Digitrip Selection Guide

Trip Unit Type	Digitrip RMS 310		Digitrip OPTIM 550	Digitrip OPTIM 750	Digitrip OPTIM 1050
RMS Sensing	Yes		Yes	Yes	Yes
Breaker Type					
Frame	N		N	N	N
Ampere Range	400A-1200A		400A-1200A	400A-1200A	400A-1200A
Interrupting Rating @ 480V	50, 65, 100 (kA)		50, 65, 100 (kA)	50, 65, 100 (kA)	50, 65, 100 (kA)
Protection					
Ordering Options	LS, LSG	LSI, LSIG	LSI, LSIG, LSI(A)	LSI(A), LSIG	LSI(A), LISG
Fixed Rated Plug (I_n)	Yes	Yes	Yes	Yes	Yes
Overtemperature Trip	Yes	Yes	Yes	Yes	Yes
Long Delay Protection (L)					
Adjustable Rating Plug (I_n)	Yes	Yes	No	No	No
Long Delay Pickup	0.5-1.0 (I_n)①	0.5-1.0 (I_n)①	0.4-1.0 x (I_n)	0.4-1.0 x (I_n)	0.4-1.0 x (I_n)
Long Delay Time I^2T	12 Seconds	12 Seconds	2-24 Seconds	2-24 Seconds	2-24 Seconds
Long Delay Time I^4T	No	No	1-5 Seconds	1-5 Seconds	1-5 Seconds
Long Delay Thermal Memory	Yes	Yes	Yes	Yes	Yes
High Load Alarm	No	No	No	0.5-1.0 x I_r	0.5-1.0 x I_r
Short Delay Protection (S)					
Short Delay Pickup	200-800% x (I_n)	200-800% x (I_n)	150-800% x (I_r)	150-800% x (I_r)	150-800% x (I_r)
Short Delay Time I^2T	100 ms	No	100-500 ms	100-500 ms	100-500 ms
Short Delay Time Flat	No	Inst-300 ms	100-500 ms	100-500 ms	100-500 ms
Short Delay Time Zone Selective Interlocking	No	No	Yes	Yes	Yes
Instantaneous Protection (I)					
Instantaneous Pickup	No	200-800% x (I_n)	200-800% x (I_n)	200-800% x (I_n)	200-800% x (I_n)
Discriminator	No	No	Yes	Yes	Yes
Instantaneous Override	Yes	Yes	Yes	Yes	Yes
Ground Fault Protection (G)					
Ground Fault Alarm	No	No	20-100% x (I_s)	20-100% x (I_s)	20-100% x (I_s)
Ground Fault Pickup	Varies by Frame②	Varies by Frame②	20-100% x (I_s)	20-100% x (I_s)	20-100% x (I_s)
Ground Fault Delay I^2T	No	No	100-500 ms	100-500 ms	100-500 ms
Ground Fault Delay Flat	Inst-500 ms	Inst-500 ms	100-500 ms	100-500 ms	100-500 ms
Ground Fault Zone Selective Interlocking	No	No	No	Yes	Yes
Ground Fault Thermal Memory	Yes	Yes	Yes	Yes	Yes
System Diagnostics					
Status LEDs	Yes	Yes	Yes	Yes	Yes
Cause of Trip LEDs	No	No	Yes	Yes	Yes
Magnitude of Trip Information	No	No	Yes	Yes	Yes
Remote Signal Contact – Ground Alarm	Yes	Yes	No	Yes	Yes
Local Auxiliary and Bell Alarm Contact	Optional	Optional	Optional	Included	Included
System Monitoring					
Digital Display	No	No	Yes②	Yes②	Yes②
Current	No	No	Yes	Yes	Yes
Power and Energy	No	No	No	No	Yes
Power Quality-Harmonics	No	No	No	No	Yes
Power Factor	No	No	No	No	Yes
Communications					
Cutler-Hammer PowerNet	No	No	No③	Yes	Yes
Testing					
Testing Method	Test Set		OPTIMizer, BIM, Cutler-Hammer PowerNet	OPTIMizer, BIM, Cutler-Hammer PowerNet	OPTIMizer, BIM, Cutler-Hammer PowerNet

① Adjust by rating plug.
② By OPTIMizer/BIM.
③ Cutler-Hammer PowerNet kit for field upgrade.

BIM = Breaker Interface Module
(A) = GF Alarm

I_s = Sensor Rating
I_n = Rating Plug
I_r = Long Delay Pickup Setting

Type ND Electronic Circuit Breakers with Non-Interchangeable Trip Units

Order as individual components: Breaker Frame, Rating Plug, Terminals

Maximum Continuous Ampere Rating @ 40°C	Digitrip RMS 310 Circuit Breaker Frame Only				Digitrip RMS 310 Rating Plug Only			Standard Terminals Only①
	Standard Interrupting Capacity 600 Volt Ac Rated 50 kAIC @ 480 Vac				Ampere Rating	Fixed Rating Plugs	Adjustable Rating Plug	See Page 85 for Optional Terminals
	Standard	Options					Adjustable Ampere Ratings Catalog Number	
	Adjustable Short Time Delay with I^2t Short Delay Ramp	Independently Adjustable Short Time Pickup and Delay	Adjustable Short Time Pickup with I^2t Short Delay and Ground Fault Protection	Independently Adjustable Short Time Pickup and Delay and Ground Fault Protection				
	Catalog Number							
2-Pole								
800	**ND2800T33W**	**ND2800T32W**	**ND2800T35W**	**ND2800T36W**	400 450 500 600 700 800	**8NES400T** **8NES450T** **8NES500T** **8NES600T** **8NES700T** **8NES800T**	Adjustable Settings are: 400, 500, 600, 800 **A8NES800T1**	**TA700NB1** **TA700NB1** **TA700NB1** **TA700NB1** **TA700NB1** **TA1000NB1**
3-Pole								
800	**ND3800T33W**	**ND3800T32W**	**ND3800T35W**	**ND3800T36W**	400 450 500 600 700 800	**8NES400T** **8NES450T** **8NES500T** **8NES600T** **8NES700T** **8NES800T**	Adjustable Settings are: 400, 500, 600, 800 **A8NES800T1**	**TA700NB1** **TA700NB1** **TA700NB1** **TA700NB1** **TA700NB1** **TA1000NB1**
4-Pole②								
800	**ND4800T33W**	**ND4800T32W**	–	–	400 450 500 600 700 800	**8NES400T** **8NES450T** **8NES500T** **8NES600T** **8NES700T** **8NES800T**	Adjustable Settings are: 400, 500, 600, 800 **A8NES800T1**	**TA700NB1** **TA700NB1** **TA700NB1** **TA700NB1** **TA700NB1** **TA1000NB1**
2-Pole								
1200	**ND212T33W**	**ND212T32W**	**ND212T35W**	**ND212T36W**	600 700 800 900 1000 1200	**12NES600T** **12NES700T** **12NES800T** **12NES900T** **12NES1000T** **12NES1200T**	Adjustable Settings are: 600, 800, 1000, 1200 **A12NES1200T1**	**TA700NB1** **TA700NB1** **TA1000NB1** **TA1000NB1** **TA1000NB1** **TA1200NB1**
3-Pole								
1200	**ND312T33W**	**ND312T32W**	**ND312T35W**	**ND312T36W**	600 700 800 900 1000 1200	**12NES600T** **12NES700T** **12NES800T** **12NES900T** **12NES1000T** **12NES1200T**	Adjustable Settings are: 600, 800, 1000, 1200 **A12NES1200T1**	**TA700NB1** **TA700NB1** **TA1000NB1** **TA1000NB1** **TA1000NB1** **TA1200NB1**
4-Pole②								
1200	**ND412T33W**	**ND412T32W**	–	–	600 700 800 900 1000 1200	**12NES600T** **12NES700T** **12NES800T** **12NES900T** **12NES1000T** **12NES1200T**	Adjustable Settings are: 600, 800, 1000, 1200 **A12NES1200T1**	**TA700NB1** **TA700NB1** **TA1000NB1** **TA1000NB1** **TA1000NB1** **TA1200NB1**

Instruction Leaflet/FRED Number 29C106

① Two terminals are required per pole.
② Neutral is in right pole.

Type HND Electronic Circuit Breakers with Non-Interchangeable Trip Units

Order as individual components: Breaker Frame, Rating Plug, Terminals

Maximum Continuous Ampere Rating @ 40°C	Digitrip RMS 310 Circuit Breaker Frame Only				Digitrip RMS 310 Rating Plug Only			Standard Terminals Only①
	High Interrupting Capacity 600 Volt Ac Rated 65 kAIC @ 480 Vac				Ampere Rating	Fixed Rating Plugs	Adjustable Rating Plug	See Page 85 for Optional Terminals
	Standard	Options					Adjustable Ampere Ratings Catalog Number	
	Adjustable Short Time Delay with I^2t Short Delay Ramp	Independently Adjustable Short Time Pickup and Delay	Adjustable Short Time Pickup with I^2t Short Delay and Ground Fault Protection	Independently Adjustable Short Time Pickup and Delay and Ground Fault Protection				
	Catalog Number							
2-Pole								
800	**HND2800T33W**	**HND2800T32W**	**HND2800T35W**	**HND2800T36W**	400 450 500 600 700 800	**8NES400T** **8NES450T** **8NES500T** **8NES600T** **8NES700T** **8NES800T**	Adjustable Settings are: 400, 500, 600, 800 **A8NES800T1**	**TA700NB1** **TA700NB1** **TA700NB1** **TA700NB1** **TA700NB1** **TA1000NB1**
3-Pole								
800	**HND3800T33W**	**HND3800T32W**	**HND3800T35W**	**HND3800T36W**	400 450 500 600 700 800	**8NES400T** **8NES450T** **8NES500T** **8NES600T** **8NES700T** **8NES800T**	Adjustable Settings are: 400, 500, 600, 800 **A8NES800T1**	**TA700NB1** **TA700NB1** **TA700NB1** **TA700NB1** **TA700NB1** **TA1000NB1**
4-Pole②								
800	**HND4800T33W**	**HND4800T32W**	–	–	400 450 500 600 700 800	**8NES400T** **8NES450T** **8NES500T** **8NES600T** **8NES700T** **8NES800T**	Adjustable Settings are: 400, 500, 600, 800 **A8NES800T1**	**TA700NB1** **TA700NB1** **TA700NB1** **TA700NB1** **TA700NB1** **TA1000NB1**
2-Pole								
1200	**HND212T33W**	**HND212T32W**	**HND212T35W**	**HND212T36W**	600 700 800 900 1000 1200	**12NES600T** **12NES700T** **12NES800T** **12NES900T** **12NES1000T** **12NES1200T**	Adjustable Settings are: 600, 800, 1000, 1200 **A12NES1200T1**	**TA700NB1** **TA700NB1** **TA1000NB1** **TA1000NB1** **TA1000NB1** **TA1200NB1**
3-Pole								
1200	**HND312T33W**	**HND312T32W**	**HND312T35W**	**HND312T36W**	600 700 800 900 1000 1200	**12NES600T** **12NES700T** **12NES800T** **12NES900T** **12NES1000T** **12NES1200T**	Adjustable Settings are: 600, 800, 1000, 1200 **A12NES1200T1**	**TA700NB1** **TA700NB1** **TA1000NB1** **TA1000NB1** **TA1000NB1** **TA1200NB1**
4-Pole②								
1200	**HND412T33W**	**HND412T32W**	–	–	600 700 800 900 1000 1200	**12NES600T** **12NES700T** **12NES800T** **12NES900T** **12NES1000T** **12NES1200T**	Adjustable Settings are: 600, 800, 1000, 1200 **A12NES1200T1**	**TA700NB1** **TA700NB1** **TA1000NB1** **TA1000NB1** **TA1000NB1** **TA1200NB1**

Instruction Leaflet/FRED Number 29C106

① Two terminals are required per pole.
② Neutral is in right pole.

Type NDC Electronic Circuit Breakers with Non-Interchangeable Trip Units

Order as individual components: Breaker Frame, Rating Plug, Terminals

Maximum Continuous Ampere Rating @ 40°C	Digitrip RMS 310 Circuit Breaker Frame Only				Digitrip RMS 310 Rating Plug Only			Standard Terminals Only①
	Ultra High Interrupting Capacity 600 Volt Ac Rated 100 kAIC @ 480 Vac				Ampere Rating	Fixed Rating Plugs	Adjustable Rating Plug	See Page 85 for Optional Terminals
	Standard	Options					Adjustable Ampere Ratings Catalog Number	
	Adjustable Short Time Delay with I^2t Short Delay Ramp	Independently Adjustable Short Time Pickup and Delay	Adjustable Short Time Pickup with I^2t Short Delay and Ground Fault Protection	Independently Adjustable Short Time Pickup and Delay and Ground Fault Protection				
	Catalog Number							
2-Pole								
800	**NDC2800T33W**	**NDC2800T32W**	**NDC2800T35W**	**NDC2800T36W**	400 450 500 600 700 800	**8NES400T** **8NES450T** **8NES500T** **8NES600T** **8NES700T** **8NES800T**	Adjustable Settings are: 400, 500, 600, 800 **A8NES800T1**	**TA700NB1** **TA700NB1** **TA700NB1** **TA700NB1** **TA700NB1** **TA1000NB1**
3-Pole								
800	**NDC3800T33W**	**NDC3800T32W**	**NDC3800T35W**	**NDC3800T36W**	400 450 500 600 700 800	**8NES400T** **8NES450T** **8NES500T** **8NES600T** **8NES700T** **8NES800T**	Adjustable Settings are: 400, 500, 600, 800 **A8NES800T1**	**TA700NB1** **TA700NB1** **TA700NB1** **TA700NB1** **TA700NB1** **TA1000NB1**
4-Pole②								
800	**NDC4800T33W**	**NDC4800T32W**	–	–	400 450 500 600 700 800	**8NES400T** **8NES450T** **8NES500T** **8NES600T** **8NES700T** **8NES800T**	Adjustable Settings are: 400, 500, 600, 800 **A8NES800T1**	**TA700NB1** **TA700NB1** **TA700NB1** **TA700NB1** **TA700NB1** **TA1000NB1**
2-Pole								
1200	**NDC212T33W**	**NDC212T32W**	**NDC212T35W**	**NDC212T36W**	600 700 800 900 1000 1200	**12NES600T** **12NES700T** **12NES800T** **12NES900T** **12NES1000T** **12NES1200T**	Adjustable Settings are: 600, 800, 1000, 1200 **A12NES1200T1**	**TA700NB1** **TA700NB1** **TA1000NB1** **TA1000NB1** **TA1000NB1** **TA1200NB1**
3-Pole								
1200	**NDC312T33W**	**NDC312T32W**	**NDC312T35W**	**NDC312T36W**	600 700 800 900 1000 1200	**12NES600T** **12NES700T** **12NES800T** **12NES900T** **12NES1000T** **12NES1200T**	Adjustable Settings are: 600, 800, 1000, 1200 **A12NES1200T1**	**TA700NB1** **TA700NB1** **TA1000NB1** **TA1000NB1** **TA1000NB1** **TA1200NB1**
4-Pole②								
1200	**NDC412T33W**	**NDC412T32W**	–	–	600 700 800 900 1000 1200	**12NES600T** **12NES700T** **12NES800T** **12NES900T** **12NES1000T** **12NES1200T**	Adjustable Settings are: 600, 800, 1000, 1200 **A12NES1200T1**	**TA700NB1** **TA700NB1** **TA1000NB1** **TA1000NB1** **TA1000NB1** **TA1200NB1**

Instruction Leaflet/FRED Number 29C106

① Two terminals are required per pole.
② Neutral is in right pole.

100% Rated Type CND Electronic Circuit Breakers with Non-Interchangeable Trip Units

The NEC allows the breaker to be rated at 100% of its frame size in an assembly, provided that 90°C wire is applied at the 75°C ampacity. Order as individual components: Breaker Frame, Rating Plug, Terminals

Maximum Continuous Ampere Rating @ 40°C	Digitrip RMS 310 Circuit Breaker Frame Only				Digitrip RMS 310 Rating Plug Only			Standard Terminals Only①
	Standard Interrupting Capacity 600 Volt Ac Rated 50 kAIC @ 480 Vac				Ampere Rating	Fixed Rating Plugs	Adjustable Rating Plug	See Page 85 for Optional Terminals
	Standard	Options					Adjustable Ampere Ratings Catalog Number	
	Adjustable Short Time Delay with I^2t Short Delay Ramp	Independently Adjustable Short Time Pickup and Delay	Adjustable Short Time Pickup with I^2t Short Delay and Ground Fault Protection	Independently Adjustable Short Time Pickup and Delay and Ground Fault Protection				
	Catalog Number							
2-Pole								
800	**CND2800T33W**	**CND2800T32W**	**CND2800T35W**	**CND2800T36W**	400 450 500 600 700 800	**8NES400T** **8NES450T** **8NES500T** **8NES600T** **8NES700T** **8NES800T**	Adjustable Settings are: 400, 500, 600, 800 **A8NES800T1**	**TA700NB1** **TA700NB1** **TA700NB1** **TA700NB1** **TA700NB1** **TA1000NB1**
3-Pole								
800	**CND3800T33W**	**CND3800T32W**	**CND3800T35W**	**CND3800T36W**	400 450 500 600 700 800	**8NES400T** **8NES450T** **8NES500T** **8NES600T** **8NES700T** **8NES800T**	Adjustable Settings are: 400, 500, 600, 800 **A8NES800T1**	**TA700NB1** **TA700NB1** **TA700NB1** **TA700NB1** **TA700NB1** **TA1000NB1**
4-Pole②								
800	**CND4800T33W**	**CND4800T32W**	–	–	400 450 500 600 700 800	**8NES400T** **8NES450T** **8NES500T** **8NES600T** **8NES700T** **8NES800T**	Adjustable Settings are: 400, 500, 600, 800 **A8NES800T1**	**TA700NB1** **TA700NB1** **TA700NB1** **TA700NB1** **TA700NB1** **TA1000NB1**
2-Pole								
1200	**CND212T33W**	**CND212T32W**	**CND212T35W**	**CND212T36W**	600 700 800 900 1000 1200	**12NES600T** **12NES700T** **12NES800T** **12NES900T** **12NES1000T** **12NES1200T**	Adjustable Settings are: 600, 800, 1000, 1200 **A12NES1200T1**	**TA700NB1** **TA700NB1** **TA1000NB1** **TA1000NB1** **TA1000NB1** **TA1200NB1**
3-Pole								
1200	**CND312T33W**	**CND312T32W**	**CND312T35W**	**CND312T36W**	600 700 800 900 1000 1200	**12NES600T** **12NES700T** **12NES800T** **12NES900T** **12NES1000T** **12NES1200T**	Adjustable Settings are: 600, 800, 1000, 1200 **A12NES1200T1**	**TA700NB1** **TA700NB1** **TA1000NB1** **TA1000NB1** **TA1000NB1** **TA1200NB1**
4-Pole②								
1200	**CND412T33W**	**CND412T32W**	–	–	600 700 800 900 1000 1200	**12NES600T** **12NES700T** **12NES800T** **12NES900T** **12NES1000T** **12NES1200T**	Adjustable Settings are: 600, 800, 1000, 1200 **A12NES1200T1**	**TA700NB1** **TA700NB1** **TA1000NB1** **TA1000NB1** **TA1000NB1** **TA1200NB1**

Instruction Leaflet/FRED Number 29C106

① Two terminals are required per pole.
② Neutral is in right pole.

100% Rated Type CHND Electronic Circuit Breakers with Non-Interchangeable Trip Units

The NEC allows the breaker to be rated at 100% of its frame size in an assembly, provided that 90°C wire is applied at the 75°C ampacity. Order as individual components: Breaker Frame, Rating Plug, Terminals

Maximum Continuous Ampere Rating @ 40°C	Digitrip RMS 310 Circuit Breaker Frame Only				Digitrip RMS 310 Rating Plug Only			Standard Terminals Only①
	High Interrupting Capacity 600 Volt Ac Rated 65 kAIC @ 480 Vac				Ampere Rating	Fixed Rating Plugs	Adjustable Rating Plug	See Page 85 for Optional Terminals
	Standard	Options					Adjustable Ampere Ratings Catalog Number	
	Adjustable Short Time Delay with I^2t Short Delay Ramp	Independently Adjustable Short Time Pickup and Delay	Adjustable Short Time Pickup with I^2t Short Delay and Ground Fault Protection	Independently Adjustable Short Time Pickup and Delay and Ground Fault Protection				
	Catalog Number							
2-Pole								
800	**CHND2800T33W**	**CHND2800T32W**	**CHND2800T35W**	**CHND2800T36W**	400 450 500 600 700 800	**8NES400T** **8NES450T** **8NES500T** **8NES600T** **8NES700T** **8NES800T**	Adjustable Settings are: 400, 500, 600, 800 **A8NES800T1**	**TA700NB1** **TA700NB1** **TA700NB1** **TA700NB1** **TA700NB1** **TA1000NB1**
3-Pole								
800	**CHND3800T33W**	**CHND3800T32W**	**CHND3800T35W**	**CHND3800T36W**	400 450 500 600 700 800	**8NES400T** **8NES450T** **8NES500T** **8NES600T** **8NES700T** **8NES800T**	Adjustable Settings are: 400, 500, 600, 800 **A8NES800T1**	**TA700NB1** **TA700NB1** **TA700NB1** **TA700NB1** **TA700NB1** **TA1000NB1**
4-Pole②								
800	**CHND4800T33W**	**CHND4800T32W**	–	–	400 450 500 600 700 800	**8NES400T** **8NES450T** **8NES500T** **8NES600T** **8NES700T** **8NES800T**	Adjustable Settings are: 400, 500, 600, 800 **A8NES800T1**	**TA700NB1** **TA700NB1** **TA700NB1** **TA700NB1** **TA700NB1** **TA1000NB1**
2-Pole								
1200	**CHND212T33W**	**CHND212T32W**	**CHND212T35W**	**CHND212T36W**	600 700 800 900 1000 1200	**12NES600T** **12NES700T** **12NES800T** **12NES900T** **12NES1000T** **12NES1200T**	Adjustable Settings are: 600, 800, 1000, 1200 **A12NES1200T1**	**TA700NB1** **TA700NB1** **TA1000NB1** **TA1000NB1** **TA1000NB1** **TA1200NB1**
3-Pole								
1200	**CHND312T33W**	**CHND312T32W**	**CHND312T35W**	**CHND312T36W**	600 700 800 900 1000 1200	**12NES600T** **12NES700T** **12NES800T** **12NES900T** **12NES1000T** **12NES1200T**	Adjustable Settings are: 600, 800, 1000, 1200 **A12NES1200T1**	**TA700NB1** **TA700NB1** **TA1000NB1** **TA1000NB1** **TA1000NB1** **TA1200NB1**
4-Pole②								
1200	**CHND412T33W**	**CHND412T32W**	–	–	600 700 800 900 1000 1200	**12NES600T** **12NES700T** **12NES800T** **12NES900T** **12NES1000T** **12NES1200T**	Adjustable Settings are: 600, 800, 1000, 1200 **A12NES1200T1**	**TA700NB1** **TA700NB1** **TA1000NB1** **TA1000NB1** **TA1000NB1** **TA1200NB1**

Instruction Leaflet/FRED Number 29C106

① Two terminals are required per pole.
② Neutral is in right pole.

100% Rated Type CNDC Electronic Circuit Breakers with Non-Interchangeable Trip Units

The NEC allows the breaker to be rated at 100% of its frame size in an assembly, provided that 90°C wire is applied at the 75°C ampacity. Order as individual components: Breaker Frame, Rating Plug, Terminals

Maximum Continuous Ampere Rating @ 40°C	Digitrip RMS 310 Circuit Breaker Frame Only				Digitrip RMS 310 Rating Plug Only			Standard Terminals Only①
	Ultra High Interrupting Capacity 600 Volt Ac Rated 100 kAIC @ 480 Vac				Ampere Rating	Fixed Rating Plugs	Adjustable Rating Plug	See Page 85 for Optional Terminals
	Standard	Options					Adjustable Ampere Ratings Catalog Number	
	Adjustable Short Time Delay with I^2t Short Delay Ramp	Independently Adjustable Short Time Pickup and Delay	Adjustable Short Time Pickup with I^2t Short Delay and Ground Fault Protection	Independently Adjustable Short Time Pickup and Delay and Ground Fault Protection				
	Catalog Number							
2-Pole								
800	**CNDC2800T33W**	**CNDC2800T32W**	**CNDC2800T35W**	**CNDC2800T36W**	400 450 500 600 700 800	**8NES400T** **8NES450T** **8NES500T** **8NES600T** **8NES700T** **8NES800T**	Adjustable Settings are: 400, 500, 600, 800 **A8NES800T1**	**TA700NB1** **TA700NB1** **TA700NB1** **TA700NB1** **TA700NB1** **TA1000NB1**
3-Pole								
800	**CNDC3800T33W**	**CNDC3800T32W**	**CNDC3800T35W**	**CNDC3800T36W**	400 450 500 600 700 800	**8NES400T** **8NES450T** **8NES500T** **8NES600T** **8NES700T** **8NES800T**	Adjustable Settings are: 400, 500, 600, 800 **A8NES800T1**	**TA700NB1** **TA700NB1** **TA700NB1** **TA700NB1** **TA700NB1** **TA1000NB1**
4-Pole②								
800	**CNDC4800T33W**	**CNDC4800T32W**	–	–	400 450 500 600 700 800	**8NES400T** **8NES450T** **8NES500T** **8NES600T** **8NES700T** **8NES800T**	Adjustable Settings are: 400, 500, 600, 800 **A8NES800T1**	**TA700NB1** **TA700NB1** **TA700NB1** **TA700NB1** **TA700NB1** **TA1000NB1**
2-Pole								
1200	**CNDC212T33W**	**CNDC212T32W**	**CNDC212T35W**	**CNDC212T36W**	600 700 800 900 1000 1200	**12NES600T** **12NES700T** **12NES800T** **12NES900T** **12NES1000T** **12NES1200T**	Adjustable Settings are: 600, 800, 1000, 1200 **A12NES1200T1**	**TA700NB1** **TA700NB1** **TA1000NB1** **TA1000NB1** **TA1000NB1** **TA1200NB1**
3-Pole								
1200	**CNDC312T33W**	**CNDC312T32W**	**CNDC312T35W**	**CNDC312T36W**	600 700 800 900 1000 1200	**12NES600T** **12NES700T** **12NES800T** **12NES900T** **12NES1000T** **12NES1200T**	Adjustable Settings are: 600, 800, 1000, 1200 **A12NES1200T1**	**TA700NB1** **TA700NB1** **TA1000NB1** **TA1000NB1** **TA1000NB1** **TA1200NB1**
4-Pole②								
1200	**CNDC412T33W**	**CNDC412T32W**	–	–	600 700 800 900 1000 1200	**12NES600T** **12NES700T** **12NES800T** **12NES900T** **12NES1000T** **12NES1200T**	Adjustable Settings are: 600, 800, 1000, 1200 **A12NES1200T1**	**TA700NB1** **TA700NB1** **TA1000NB1** **TA1000NB1** **TA1000NB1** **TA1200NB1**

Instruction Leaflet/FRED Number 29C106

① Two terminals are required per pole.
② Neutral is in right pole.

Digitrip OPTIM① Electronic Circuit Breakers with Interchangeable Rating Plugs

Order as individual components: Breaker Frame (which includes Trip Unit), Rating Plug, Terminals.

Maximum Continuous Ampere Rating @ 40°C	Circuit Breaker Frame Only							Digitrip OPTIM Rating Plug Only	
	L – Adjustable Long Delay Pickup (I_r) with Adjustable Long Delay Time (I^2t or I^4t Response)② S – Adjustable Short Delay Pickup with Adjustable Short Delay Time (I^2t or Flat Response) I – Adjustable Instantaneous Pickup G – Adjustable Ground Fault Pickup with Adjustable Ground Fault Time Delay (I^2t or Flat Response) A – Adjustable Ground Fault Alarm with Adjustable Ground Fault Time Delay (I^2t or Flat Response)							Ampere Rating	Fixed Rating Plug
	OPTIM 550	OPTIM 550	OPTIM 550	OPTIM 750	OPTIM 750	OPTIM 1050	OPTIM 1050		
	LSI	LSIG	LSIA	LSIG	LSIA	LSIG	LSIA		
	Catalog Number								
3-Pole Standard Interrupting Capacity 600 Volt Ac Rated 50 kAIC @ 480 Vac									
800	ND3800T52W	ND3800T56W	ND3800T57W	ND3800T76W	ND3800T77W	ND3800T106W	ND3800T107W	400 450 500 550 600 700 800	ORPN80A400 ORPN80A450 ORPN80A500 ORPN80A550 ORPN80A600 ORPN80A700 ORPN80A800
1200	ND312T52W	ND312T56W	ND312T57W	ND312T76W	ND312T77W	ND312T106W	ND312T107W	600 700 800 1000 1200	ORPN80A600 ORPN80A700 ORPN80A800 ORPN80A100 ORPN80A120
3-Pole High Interrupting Capacity 600 Volt Ac Rated 65 kAIC @ 480 Vac									
800	HND3800T52W	HND3800T56W	HND3800T57W	HND3800T76W	HND3800T77W	HND3800T106W	HND3800T107W	400 450 500 550 600 700 800	ORPN80A400 ORPN80A450 ORPN80A500 ORPN80A550 ORPN80A600 ORPN80A700 ORPN80A800
1200	HND312T52W	HND312T56W	HND312T57W	HND312T76W	HND312T77W	HND312T106W	HND312T107W	600 700 800 1000 1200	ORPN80A600 ORPN80A700 ORPN80A800 ORPN80A100 ORPN80A120
3-Pole Ultra High Interrupting Capacity 600 Volt Ac Rated 100 kAIC @ 480 Vac									
800	NDC3800T52W	NDC3800T56W	NDC3800T57W	NDC3800T76W	NDC3800T77W	NDC3800T106W	NDC3800T107W	400 450 500 550 600 700 800	ORPN80A400 ORPN80A450 ORPN80A500 ORPN80A550 ORPN80A600 ORPN80A700 ORPN80A800
1200	NDC312T52W	NDC312T56W	NDC312T57W	NDC312T76W	NDC312T77W	NDC312T106W	NDC312T107W	600 700 800 1000 1200	ORPN80A600 ORPN80A700 ORPN80A800 ORPN80A100 ORPN80A120

Instruction Leaflet/FRED Number 29C106 for Breaker; 29C891 for OPTIM Trip

① 1 Form C auxiliary switch and 1 Form C bell (trip) alarm switch supplied with breaker as standard on models 750 and 1050.

② Long delay I^4t response selection limits short delay time to flat response.

100% Rated Digitrip OPTIM① Circuit Breakers with Interchangeable Rating Plugs

Order as individual components: Breaker Frame (which includes Trip Unit), Rating Plug, Terminals.

Maximum Continuous Ampere Rating @ 40°C	Circuit Breaker Frame Only							Digitrip OPTIM Rating Plug Only	
	L – Adjustable Long Delay Pickup (I_r) with Adjustable Long Delay Time (I^2t or I^4t Response)② S – Adjustable Short Delay Pickup with Adjustable Short Delay Time (I^2t or Flat Response) I – Adjustable Instantaneous Pickup G – Adjustable Ground Fault Pickup with Adjustable Ground Fault Time Delay (I^2t or Flat Response) A – Adjustable Ground Fault Alarm with Adjustable Ground Fault Time Delay (I^2t or Flat Response)							Ampere Rating	Fixed Rating Plug
	OPTIM 550	OPTIM 550	OPTIM 550	OPTIM 750	OPTIM 750	OPTIM 1050	OPTIM 1050		
	LSI	LSIG	LSIA	LSIG	LSIA	LSIG	LSIA		
	Catalog Number								
3-Pole Standard Interrupting Capacity 600 Volt Ac Rated 50 kAIC @ 480 Vac									
800	CND3800T52W	CND3800T56W	CND3800T57W	CND3800T76W	CND3800T77W	CND3800T106W	CND3800T107W	400 450 500 550 600 700 800	ORPN80A400 ORPN80A450 ORPN80A500 ORPN80A550 ORPN80A600 ORPN80A700 ORPN80A800
1200	CND312T52W	CND312T56W	CND312T57W	CND312T76W	CND312T77W	CND312T106W	CND312T107W	600 700 800 1000 1200	ORPN80A600 ORPN80A700 ORPN80A800 ORPN80A100 ORPN80A120
3-Pole High Interrupting Capacity 600 Volt Ac Rated 65 kAIC @ 480 Vac									
800	CHND3800T52W	CHND3800T56W	CHND3800T57W	CHND3800T76W	CHND3800T77W	CHND3800T106W	CHND3800T107W	400 450 500 550 600 700 800	ORPN80A400 ORPN80A450 ORPN80A500 ORPN80A550 ORPN80A600 ORPN80A700 ORPN80A800
1200	CHND312T52W	CHND312T56W	CHND312T57W	CHND312T76W	CHND312T77W	CHND312T106W	CNHD312T107W	600 700 800 1000 1200	ORPN80A600 ORPN80A700 ORPN80A800 ORPN80A100 ORPN80A120
3-Pole Ultra High Interrupting Capacity 600 Volt Ac Rated 100 kAIC @ 480 Vac									
800	CNDC3800T52W	CNDC3800T56W	CNDC3800T57W	CNDC3800T76W	CNDC3800T77W	CNDC3800T106W	CNDC3800T107W	400 450 500 550 600 700 800	ORPN80A400 ORPN80A450 ORPN80A500 ORPN80A550 ORPN80A600 ORPN80A700 ORPN80A800
1200	CNDC312T52W	CNDC312T56W	CNDC312T57W	CNDC312T76W	CNDC312T77W	CNDC312T106W	CNDC312T107W	600 700 800 1000 1200	ORPN80A600 ORPN80A700 ORPN80A800 ORPN80A100 ORPN80A120

Instruction Leaflet/FRED Number 29C106 for Breaker; 29C891 for OPTIM Trip

① 1 Form C auxiliary switch and 1 Form C bell (trip) alarm switch supplied with breaker as standard on models 750 and 1050.

② Long delay I^4t response selection limits short delay time to flat response.

Type ND Molded Case Switches

Continuous Ampere Rating @ 40°C	Catalog Number		
	2-Pole	3-Pole	4-Pole①
	Complete with Standard Line and Load Terminals (shipped separately)		
	Type ND – HIgh Instantaneous (K)		
800	–	ND3800WK	ND4800WK
	Type ND – HIgh Instantaneous (K)		
1200	–	ND312WK	ND412WK

Note: Molded case switch may trip above 14,000 amperes.

For UL listed, series tested molded case switch application data, refer to Cutler-Hammer.

Instruction Leaflet/FRED Number 29C106

Line and Load Terminals

Ordering Information

N-frame circuit breakers use Cu/Al terminals as standard. When optional copper or Cu/Al terminals are required, order by catalog number. Specify if factory installation is required.

Line and Load Terminals

Maximum Breaker Amperes	Terminal Body Material	Wire Type	AWG Wire Range/No. Conductors	Metric Wire Range mm^2	Catalog Number
Standard Cu/Al Pressure Terminals					
700	Aluminum	Cu/Al	(2) 1-500 kcmil	50-300	**TA700NB1**
1000	Aluminum	Cu/Al	(3) 3/0-400 kcmil	95-185	**TA1000NB1②**
1200	Aluminum	Cu/Al	(4) 4/0-500 kcmil	120-300	**TA1200NB1②**
1200	Aluminum	Cu/Al	(3) 500-750 kcmil	300-400	**TA1201NB1③**
Optional Copper and Cu/Al Pressure Type Terminals					
700	Copper	Cu	(2) 2/0-500 kcmil	70-300	**T700NB1**
1000	Copper	Cu	(3) 3/0-500 kcmil	95-300	**T1000NB1**
1200	Copper	Cu	(4) 3/0-400 kcmil	95-185	**T1200NB3**

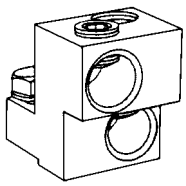
TA700NB1

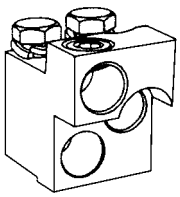
TA1000NB1

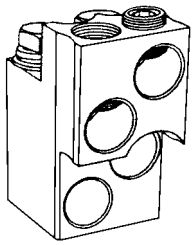
TA1200NB1

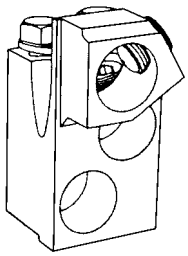
TA1201NB1

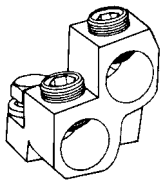
T700NB1

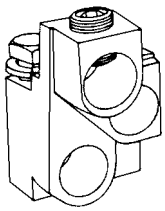
T1000NB1

① Neutral is in right pole.
② Terminal rating is A19 Cu.
③ Terminal rating is A17 Cu.

Catalog Numbering System

This information is presented only as an aid to understanding catalog numbers. It is not to be used to build catalog numbers for circuit breakers or trip units.

Circuit Breaker/Frame Catalog Number

ND 3 12 T3 2 W

Circuit Breaker/ Frame Type	Number of Poles	Circuit Breaker/ Frame Ampere Rating	Trip Model	Trip Type	Suffix
ND HND NDC CND CHND CNDC	2: 2 Poles 3: 3 Poles 4: 4 Poles	8: 800 Amperes 12: 1200 Amperes	T3 – Model 310 T5 – Model 550 T7 – Model 750 T10 – Model 1050	2 – LSI 3 – LS 5 – LSG 6 – LSIG 7 – LSIA	E: 100% R.P. protected (4-Pole) EH: 50% R.P. protected (4-Pole) K: High Magnetic Molded Case Switch W: Without Terminals X: Load Only Terminals Y: Line Only Terminals

Dimensions/Weights

Dimensions, Inches (mm)

Number of Poles	Width	Height	Depth
2, 3	8.25 (210)	16 (407)	5.5 (140)
4	11.125 (283)	16 (407)	5.5 (140)

Approximate Shipping Weight, Lbs. (kg)

Breaker Type	Complete Breaker		
	Number of Poles		
	2	3	4
ND, HND, NDC	37 (16.783)	45 (20.412)	58 (26.308)

Allowable Accessory Combinations

Different combinations of accessories can be supplied, depending on the types of accessories and the number of poles in the circuit breaker.

	Reference Page		3-Pole				4-Pole			
			Left	Center	Right		Left	Center	Right	Neu.
Internal Accessories (Only One Internal Accessory Per Pole)①										
Alarm Lockout (Make/Break)	141		■		■		■		■	
Alarm Lockout (2Make/2Break)	141		■		■		■		■	
Auxiliary Switch (1A, 1B)	144		■		■		■		■	
Auxiliary Switch (2A, 2B)	144		■		■		■		■	
Auxiliary Switch (3A, 3B)	144		■		■		■		■	
Auxiliary Switch (1A 1B) and Alarm Switch Combination	146		■		■		■		■	
Auxiliary Switch (2A 2B) and Alarm Switch Combination	146		■		■		■		■	
Shunt Trip – Standard	150		■				■			
Shunt Trip – Low Energy	152		■				■			
Undervoltage Release Mechanism	158		■				■			
Cutler-Hammer PowerNet Communications Kit (OPTIM 550)	160				■					
External Accessories										
Base Mounting Hardware	163			●				●		
Interphase Barriers	166			●				●		
Non-Padlockable Handle Block	168			■				■		
Padlockable Handle Lock Hasp	169		❑		❑		❑		❑	
Key Interlock Kit	170		❑		❑		❑		❑	
Sliding Bar Interlock – Requires Two Breakers	171			●						
Walking Beam Interlock – Requires Two Breakers	171			●				●		
Electrical (Motor) Operator	173			●				●		
Plug-in Adapters	174			●				●		
Rear Connecting Studs	176			●				●		
Panelboard Connecting Straps	177			●				●		
Handle Mechanisms	178			●				●		
Handle Extension	182			●				●		
Solid-State (Electronic) Portable Test Kit	184			●				●		
OPTIM System Components 3-Poles										
Ground Fault Alarm Unit	184									
Potential Transformer Module	184									
Breaker Interface Module (BIM)	185									
Digitrip OPTIMizer	185									
Auxiliary Power Module	185									
Cutler-Hammer PowerNet Software	185									
Modifications (Refer to Cutler-Hammer)										
Special Calibration	186			●				●		
Moisture Fungus Treatment	186			●				●		
Freeze-Tested Circuit Breakers	186			●				●		
Marine Application	186			●				●		

■ Applicable in indicated pole position

❑ May be mounted on left or right pole – not both

● Accessory available/Modification available

① OPTIM 750 and 1050 are factory sealed and do not have the right pole available for accessories.

Typical Series C R-Frame Circuit Breaker

- R-frame circuit breakers are available as frame (which includes trip unit), rating plug and terminals.
- All R-frame circuit breakers are suitable for reverse feed use.

Interrupting Capacity Ratings

UL489/CSA Interrupting Capacity Ratings ①

Circuit Breaker Type	Number of Poles	Interrupting Capacity (Symmetrical Amperes) (kA) Volts Ac (50/60 Hz)				Circuit Breaker Type	Page Numbers Trip Unit Types②					
		240	277	480	600		310	510	610	810	910	OPTIM
RD	3, 4	125	–	65	50	RD	91	94	96	98	100	102
CRD ③	3, 4	125	–	65	50	CRD	93	95	97	99	101	103
RDC	3, 4	200	–	100	65	RDC	92	94	96	98	100	102
CRDC ③	3, 4	200	–	100	65	CRDC	93	95	97	99	101	103

IEC 947-2 Interrupting Capacity Ratings ①

Circuit Breaker Type	Number of Poles	Interrupting Capacity (Symmetrical Amperes) (kA) Volts Ac (50/60 Hz)			Circuit Breaker Type	Page Numbers Trip Unit Types②					
		240	415	690		310	510	610	810	910	OPTIM
RD I_{CU} I_{CS}	3, 4	 135 100	 70 50	 25 13	RD	91	94	96	98	100	102
RDC I_{CU} I_{CS}	3, 4	 200 100	 100 50	 35 18	RDC	92	94	96	98	100	102

① Utilization Category A circuit breakers.
② See page 90 for Trip Unit Selection Guide
③ 100% Rated breakers.

R-Frame Digitrip Selection Guide

Trip Unit Type	Digitrip RMS 310		Digitrip RMS 510	Digitrip RMS 610	Digitrip OPTIM 750	Digitrip RMS 810	Digitrip RMS 910	Digitrip OPTIM 1050
RMS Sensing	Yes		Yes	Yes	Yes	Yes	Yes	Yes
Breaker Type								
Frame	R		R	R	R	R	R	R
Ampere Range	800A-2500A		800A-2500A	800A-2500A	800A-2500A	800A-2500A	800A-2500A	800A-2500A
Interrupting Rating @ 480V	65, 100 (kA)		65, 100 (kA)	65, 100 (kA)	65, 100 (kA)	65, 100 (kA)	65, 100 (kA)	65, 100 (kA)
Protection								
Ordering Options	LS, LSG	LSI, LSIG	LI, LS, LSI, LIG, LSG, LSIG	LI, LS, LSI, LIG LSG, LSIG	LSI(A), LSIG	LI, LS, LSI, LIG, LSG, LSIG	LI, LS, LSI, LIG, LSG, LSIG	LSI(A), LISG
Fixed Rated Plug (I_n)	Yes	Yes	Yes	Yes	Yes	Yes	Yes	Yes
Overtemperature Trip	Yes	Yes	Yes	Yes	Yes	Yes	Yes	Yes
Long Delay Protection (L)								
Adjustable Rating Plug (I_n)	Yes	Yes	No	No	No	No	No	No
Long Delay Pickup	0.5-1.0 (I_n)①	0.5-1.0 (I_n)①	0.5-1.0 x (I_n)	0.5-1.0 x (I_n)	0.4-1.0 x (I_n)	0.5-1.0 x (I_n)	0.5-1.0 x (I_n)	0.4-1.0 x (I_n)
Long Delay Time I^2T	12 Seconds	12 Seconds	2-24 Seconds	2-24 Seconds	2-24 Seconds	2-24 Seconds	2-24 Seconds	2-24 Seconds
Long Delay Time I^4T	No	No	No	No	1-5 Seconds	No	No	1-5 Seconds
Long Delay Thermal Memory	Yes	Yes	Yes	Yes	Yes	Yes	Yes	Yes
High Load Alarm	No	No	No	0.85 x I_r	0.5-1.0 x I_r	0.85 x I_r	0.85 x I_r	0.5-1.0 x I_r
Short Delay Protection (S)								
Short Delay Pickup	200-800% x (I_n)②	200-800% x (I_n)②	200-600% S1&S2 x (I_r)	200-600% S1&S2 x (I_r)	150-800% x (I_r)②③	200-600% S1&S2 x (I_r)	200-600% S1&S2 x (I_r)	150-800% x (I_r)②③
Short Delay Time I^2T	100 ms	No	100-500 ms	100-500 ms	100-500 ms	100-500 ms	100-500 ms	100-500 ms
Short Delay Time Flat	No	Inst-300 ms	100-500 ms	100-500 ms	100-500 ms	100-500 ms	100-500 ms	100-500 ms
Short Delay Time Zone Selective Interlocking	No	No	Yes	Yes	Yes	Yes	Yes	Yes
Instantaneous Protection (I)								
Instantaneous Pick Up	No	200-800% x (I_n)	200-600% M1&M2 x (I_n)	200-600% M1&M2 x (I_n)	200-800% x (I_n)③	200-600% M1&M2 x (I_n)	200-600% M1&M2 x (I_n)	200-800% x (I_n)③
Discriminator	No	No	Yes④	Yes④	Yes	Yes④	Yes④	Yes
Instantaneous Override	Yes	Yes	Yes	Yes	Yes	Yes	Yes	Yes
Ground Fault Protection (G)								
Ground Fault Alarm⑤	No	No	No	No	25-100% x (I_n)	No	No	25-100% x (I_n)
Ground Fault Pick Up⑤	Varies by Frame	Varies by Frame	25-100% x (I_s)	25-100% x (I_s)	25-100% x (I_n)	25-100% x (I_s)	25-100% x (I_s)	25-100% x (I_n)
Ground Fault Delay I^2T	No	No	100-500 ms	100-500 ms	100-500 ms	100-500 ms	100-500 ms	100-500 ms
Ground Fault Delay Flat	Inst-500 ms	Inst-500 ms	100-500 ms	100-500 ms	100-500 ms	100-500 ms	100-500 ms	100-500 ms
Ground Fault Zone Selective Interlocking	No	No	Yes	Yes	Yes	Yes	Yes	Yes
Ground Fault Thermal Memory	Yes	Yes	Yes	Yes	Yes	Yes	Yes	Yes
System Diagnostics								
Status LEDs	Yes	Yes	Yes	Yes	Yes	Yes	Yes	Yes
Cause of Trip LEDs	No	No	Yes	Yes	Yes	Yes	Yes	Yes
Magnitude of Trip Information	No	No	No	Yes	Yes	Yes	Yes	Yes
Remote Signal Contacts	Yes	Yes	No	Yes	Yes	Yes	Yes	Yes
System Monitoring								
Digital Display	No	No	No	Yes	Yes⑥	Yes	Yes	Yes⑥
Current	No	No	No	Yes	Yes	Yes	Yes	Yes
Voltage	No	No	No	No	No	No	Yes	No
Power and Energy	No	No	No	No	No	Yes	Yes	Yes
Power Quality-Harmonics	No	No	No	No	No	No	Yes	Yes
Power Factor	No	No	No	No	No	Yes (Over Cutler-Hammer Power-Net Only)	Yes	Yes
Communications								
Cutler-Hammer PowerNet	No	No	No	No	Yes	Yes	Yes	Yes
Testing								
Testing Method	Test Set		Integral	Integral	OPTIMizer, BIM, Cutler-Hammer PowerNet	Integral	Integral	OPTIMizer, BIM, Cutler-Hammer PowerNet

① Adjust by rating plug.
② Except 2500 ampere frame is 200-600%.
③ Varies by frame.
④ LS/LSG only.
⑤ Not to exceed 1200 amperes.
⑥ By OPTIMizer/BIM.
BIM = Breaker Interface Module
(A) = GF Alarm

I_s = Sensor Rating
I_n = Rating Plug
I_r = Long Delay Pickup Setting x I_n

Digitrip RMS 310 Electronic Circuit Breakers with Interchangeable Rating Plugs

Order as individual components: Breaker Frame (which includes Trip Unit) and Rating Plug.

Maximum Continuous Ampere Rating @ 40°C	Circuit Breaker Frame Only				Digitrip RMS 310 Rating Plug Only		
	L – Adjustable Long Delay Pickup (By Adjustable Rating Plug) S – Adjustable Short Delay Pickup with Fixed Short Delay Time (I^2t Response) or Adjustable Short Delay Time (Flat Response) I – Adjustable Instantaneous Pickup by Setting Short Delay Time to Instantaneous G – Adjustable Ground Fault Pickup with Adjustable Ground Fault Time (Flat Response)				Ampere Rating	Fixed Rating Plug	Adjustable Rating Plug Adjustable Ampere Ratings Catalog Number
	LS	LSI	LSG③	LSIG③			
	Catalog Number						
3-Pole Standard Interrupting Capacity 600 Volt Ac Rated 65 kAIC @ 480 Vac							
1600①	**RD316T33W**	**RD316T32W**	**RD316T35W**	**RD316T36W**	800 1000 1200 1250 1400 1500 1600	**16RES08T** **16RES10T** **16RES12T** **16RES125T** **16RES14T** **16RES15T** **16RES16T**	Adjustable Settings are: 800, 1000, 1200, 1600 **A16RES16T1**
2000	**RD320T33W**	**RD320T32W**	**RD320T35W**	**RD320T36W**	1000 1200 1250 1400 1600 2000	**20RES10T** **20RES12T** **20RES125T** **20RES14T** **20RES16T** **20RES20T**	Adjustable Settings are: 1000, 1200, 1600, 2000 **A20RES20T1**
2500	**RD325T33W**	**RD325T32W**	**RD325T35W**	**RD325T36W**	1200 1250 1600 2000 2500	**25RES12T** **25RES125T** **25RES16T** **25RES20T** **25RES25T**	Adjustable Settings are: 1200, 1600, 2000, 2500 **A25RES25T1**
4-Pole② Standard Interrupting Capacity 600 Volt Ac Rated 65 kAIC @ 480 Vac							
1600①	**RD416T33W**	**RD416T32W**	–	–	800 1000 1200 1250 1400 1500 1600	**16RES08T** **16RES10T** **16RES12T** **16RES125T** **16RES14T** **16RES15T** **16RES16T**	Adjustable Settings are: 800, 1000, 1200, 1600 **A16RES16T1**
2000	**RD420T33W**	**RD420T32W**	–	–	1000 1200 1250 1400 1600 2000	**20RES10T** **20RES12T** **20RES125T** **20RES14T** **20RES16T** **20RES20T**	Adjustable Settings are: 1000, 1200, 1600, 2000 **A20RES20T1**
2500	**RD425T33W**	**RD425T32W**	–	–	1200 1250 1600 2000 2500	**25RES12T** **25RES125T** **25RES16T** **25RES20T** **25RES25T**	Adjustable Settings are: 1200, 1600, 2000, 2500 **A25RES25T1**

Instruction Leaflet/FRED Number 29C107 for Breaker; Number 29C883 for Digitrip 310 Trip Unit

① For SCR application use 2000 ampere frame.
② Unprotected right pole neutral. Add "P" to catalog number for 100% protected right pole neutral, i.e., "RD416T33PW".
③ Add suffix "R" to breaker catalog number for ground fault remote indication compatibility.

Digitrip RMS 310 Electronic Circuit Breakers with Interchangeable Rating Plugs

Order as individual components: Breaker Frame (which includes Trip Unit) and Rating Plug.

Maximum Continuous Ampere Rating @ 40°C	Circuit Breaker Frame Only				Digitrip RMS 310 Rating Plug Only		
	L – Adjustable Long Delay Pickup (By Adjustable Rating Plug) S – Adjustable Short Delay Pickup with Fixed Short Delay Time (I^2t Response) or Adjustable Short Delay Time (Flat Response) I – Adjustable Instantaneous Pickup by Setting Short Delay Time to Instantaneous G – Adjustable Ground Fault Pickup with Adjustable Ground Fault Time (Flat Response)				Ampere Rating	Fixed Rating Plug	Adjustable Rating Plug Adjustable Ampere Ratings Catalog Number
	LS	LSI	LSG③	LSIG③			
	Catalog Number						
3-Pole High Interrupting Capacity 600 Volt Ac Rated 100 kAIC @ 480 Vac							
1600①	**RDC316T33W**	**RDC316T32W**	**RDC316T35W**	**RDC316T36W**	800 1000 1200 1250 1400 1500 1600	**16RES08T** **16RES10T** **16RES12T** **16RES125T** **16RES14T** **16RES15T** **16RES16T**	Adjustable Settings are: 800, 1000, 1200, 1600 **A16RES16T1**
2000	**RDC320T33W**	**RDC320T32W**	**RDC320T35W**	**RDC320T36W**	1000 1200 1250 1400 1600 2000	**20RES10T** **20RES12T** **20RES125T** **20RES14T** **20RES16T** **20RES20T**	Adjustable Settings are: 1000, 1200, 1600, 2000 **A20RES20T1**
2500	**RDC325T33W**	**RDC325T32W**	**RDC325T35W**	**RDC325T36W**	1200 1250 1600 2000 2500	**25RES12T** **25RES125T** **25RES16T** **25RES20T** **25RES25T**	Adjustable Settings are: 1200, 1600, 2000, 2500 **A25RES25T1**
4-Pole② High Interrupting Capacity 600 Volt Ac Rated 100 kAIC @ 480 Vac							
1600①	**RDC416T33W**	**RDC416T32W**	–	–	800 1000 1200 1250 1400 1500 1600	**16RES08T** **16RES10T** **16RES12T** **16RES125T** **16RES14T** **16RES15T** **16RES16T**	Adjustable Settings are: 800, 1000, 1200, 1600 **A16RES16T1**
2000	**RDC420T33W**	**RDC420T32W**	–	–	1000 1200 1250 1400 1600 2000	**20RES10T** **20RES12T** **20RES125T** **20RES14T** **20RES16T** **20RES20T**	Adjustable Settings are: 1000, 1200, 1600, 2000 **A20RES20T1**
2500	**RDC425T33W**	**RDC425T32W**	–	–	1200 1250 1600 2000 2500	**25RES12T** **25RES125T** **25RES16T** **25RES20T** **25RES25T**	Adjustable Settings are: 1200, 1600, 2000, 2500 **A25RES25T1**

Instruction Leaflet/FRED Number 29C107 for Breaker; Number 29C883 for Digitrip 310 Trip Unit

① For SCR application use 2000 ampere frame.
② Unprotected right pole neutral. Add "P" to catalog number for 100% protected right pole neutral, i.e., "RDC416T33PW".
③ Add suffix "R" to breaker catalog number for ground fault remote indication compatibility.

100% Rated Digitrip RMS 310 Electronic Circuit Breakers①

The NEC allows the breaker to be rated at 100% of its frame size in an assembly, provided that 90°C wire is applied at 75°C ampacity. Order as individual components: Breaker Frame (which includes Trip Unit) and Rating Plug.

Maximum Continuous Ampere Rating @ 40°C	Circuit Breaker Frame Only				Digitrip RMS 310 Rating Plug Only		
	L – Adjustable Long Delay Pickup (By Adjustable Rating Plug) S – Adjustable Short Delay Pickup with Fixed Short Delay Time (I^2t Response) or Adjustable Short Delay Time (Flat Response) I – Adjustable Instantaneous Pickup by Setting Short Delay Time to Instantaneous G – Adjustable Ground Fault Pickup with Adjustable Ground Fault Time (Flat Response)				Ampere Rating	Fixed Rating Plug	Adjustable Rating Plug Adjustable Ampere Ratings Catalog Number
	LS	LSI	LSG③	LSIG③			
	Catalog Number						
3-Pole Standard Interrupting Capacity 600 Volt Ac Rated 65 kAIC @ 480 Vac							
1600②	**CRD316T33W**	**CRD316T32W**	**CRD316T35W**	**CRD316T36W**	800 1000 1200 1250 1400 1500 1600	**16RES08T** **16RES10T** **16RES12T** **16RES125T** **16RES14T** **16RES15T** **16RES16T**	Adjustable Settings are: 800, 1000, 1200, 1600 **A16RES16T1**
2000	**CRD320T33W**	**CRD320T32W**	**CRD320T35W**	**CRD320T36W**	1000 1200 1250 1400 1600 2000	**20RES10T** **20RES12T** **20RES125T** **20RES14T** **20RES16T** **20RES20T**	Adjustable Settings are: 1000, 1200, 1600, 2000 **A20RES20T1**
3-Pole High Interrupting Capacity 600 Volt Ac Rated 100 kAIC @ 480 Vac							
1600①②	**CRDC316T33W**	**CRDC316T32W**	**CRDC316T35W**	**CRDC316T36W**	800 1000 1200 1250 1400 1500 1600	**16RES08T** **16RES10T** **16RES12T** **16RES125T** **16RES14T** **16RES15T** **16RES16T**	Adjustable Settings are: 800, 1000, 1200, 1600 **A16RES16T1**
2000	**CRDC320T33W**	**CRDC320T32W**	**CRDC320T35W**	**CRDC320T36W**	1000 1200 1250 1400 1600 2000	**20RES10T** **20RES12T** **20RES125T** **20RES14T** **20RES16T** **20RES20T**	Adjustable Settings are: 1000, 1200, 1600, 2000 **A20RES20T1**

Instruction Leaflet/FRED Number 29C107 for Breaker; Number 29C883 for Digitrip 310 Trip Unit

① Includes B2016RDL rear connections. Refer to TD.29.02.T.E for dimensions.
② For SCR application use 2000 ampere frame.
③ Add suffix "R" to breaker catalog number for ground fault remote indication compatibility.

Digitrip RMS 510 Electronic Circuit Breakers with Interchangeable Rating Plugs

Order as individual components: Breaker Frame (which includes Trip Unit) and Rating Plug.

Maximum Continuous Ampere Rating @ 40°C	Circuit Breaker Frame Only						Digitrip Rating Plug Only	
	L – Adjustable Long Delay Pickup (I_r) with Adjustable Long Delay Time S – Adjustable Short Delay Pickup with Adjustable Short Delay Time (I^2t or Flat Response) I – Adjustable Instantaneous Pickup G – Adjustable Ground Fault Pickup with Adjustable Ground Fault Time Delay (I^2t or Flat Response)						Fixed Rating Plug	
	LI	LS	LSI	LIG	LSG	LSIG	Rated Current (I_n)	Catalog Number
	Catalog Number							
3-Pole Standard Interrupting Capacity 600 Volt Ac Rated 65 kAIC @ 480 Vac								
1600	RD316T51W	RD316T53W	RD316T52W	RD316T54W	RD316T55W	RD316T56W	800 1000 1200 1600	RP6R16A080 RP6R16A100 RP6R16A120 RP6R16A160
2000	RD320T51W	RD320T53W	RD320T52W	RD320T54W	RD320T55W	RD320T56W	1000 1200 1600 2000	RP6R20A100 RP6R20A120 RP6R20A160 RP6R20A200
2500	RD325T51W	RD325T53W	RD325T52W	RD325T54W	RD325T55W	RD325T56W	1600 2000 2500	RP6R25A160 RP6R25A200 RP6R25A250
3-Pole High Interrupting Capacity 600 Volt Ac Rated 100 kAIC @ 480 Vac								
1600	RDC316T51W	RDC316T53W	RDC316T52W	RDC316T54W	RDC316T55W	RDC316T56W	800 1000 1200 1600	RP6R16A080 RP6R16A100 RP6R16A120 RP6R16A160
2000	RDC320T51W	RDC320T53W	RDC320T52W	RDC320T54W	RDC320T55W	RDC320T56W	1000 1200 1600 2000	RP6R20A100 RP6R20A120 RP6R20A160 RP6R20A200
2500	RDC325T51W	RDC325T53W	RDC325T52W	RDC325T54W	RDC325T55W	RDC325T56W	1600 2000 2500	RP6R25A160 RP6R25A200 RP6R25A250

Instruction Leaflet/FRED Number 29C107 for Breaker; Number 29C885 for Digitrip 510 Trip Unit

100% Rated Digitrip RMS 510 Circuit Breakers

The NEC allows the breaker to be rated at 100% of its frame size in an assembly, provided that 90°C wire is applied at 75°C ampacity. Order as individual components: Breaker Frame (which includes Trip Unit) and Rating Plug.

Maximum Continuous Ampere Rating @ 40°C	Circuit Breaker Frame Only						Digitrip Rating Plug Only	
	L – Adjustable Long Delay Pickup (I_r) with Adjustable Long Delay Time S – Adjustable Short Delay Pickup with Adjustable Short Delay Time (I^2t or Flat Response) I – Adjustable Instantaneous Pickup G – Adjustable Ground Fault Pickup with Adjustable Ground Fault Time Delay (I^2t or Flat Response)						Fixed Rating Plug	
	LI	LS	LSI	LIG	LSG	LSIG	Rated Current (I_n)	Catalog Number
	Catalog Number							
3-Pole Standard Interrupting Capacity 600 Volt Ac Rated 65 kAIC @ 480 Vac								
1600	CRD316T51W	CRD316T53W	CRD316T52W	CRD316T54W	CRD316T55W	CRD316T56W	800 1000 1200 1600	RP6R16A080 RP6R16A100 RP6R16A120 RP6R16A160
2000	CRD320T51W	CRD320T53W	CRD320T52W	CRD320T54W	CRD320T55W	CRD320T56W	1000 1200 1600 2000	RP6R20A100 RP6R20A120 RP6R20A160 RP6R20A200
3-Pole High Interrupting Capacity 600 Volt Ac Rated 100 kAIC @ 480 Vac								
1600	CRDC316T51W	CRDC316T53W	CRDC316T52W	CRDC316T54W	CRDC316T55W	CRDC316T56W	800 1000 1200 1600	RP6R16A080 RP6R16A100 RP6R16A120 RP6R16A160
2000	CRDC320T51W	CRDC320T53W	CRDC320T52W	CRDC320T54W	CRDC320T55W	CRDC320T56W	1000 1200 1600 2000	RP6R20A100 RP6R20A120 RP6R20A160 RP6R20A200

Instruction Leaflet/FRED Number 29C107 for Breaker; Number 29885 for Digitrip 510 Trip Unit

Digitrip RMS 610 Electronic Circuit Breakers with Interchangeable Rating Plugs

Order as individual components: Breaker Frame (which includes Trip Unit) and Rating Plug.

Maximum Continuous Ampere Rating @ 40°C	Circuit Breaker Frame Only						Digitrip Rating Plug Only	
	L – Adjustable Long Delay Pickup (I_r) with Adjustable Long Delay Time S – Adjustable Short Delay Pickup with Adjustable Short Delay Time (I^2t or Flat Response) I – Adjustable Instantaneous Pickup G – Adjustable Ground Fault Pickup with Adjustable Ground Fault Time Delay (I^2t or Flat Response)						Fixed Rating Plug	
							Rated Current (I_n)	Catalog Number
	LI	LS	LSI	LIG	LSG	LSIG		
	Catalog Number							
3-Pole Standard Interrupting Capacity 600 Volt Ac Rated 65 kAIC @ 480 Vac								
1600	RD316T61W	RD316T63W	RD316T62W	RD316T64W	RD316T65W	RD316T66W	800 1000 1200 1600	RP6R16A080 RP6R16A100 RP6R16A120 RP6R16A160
2000	RD320T61W	RD320T63W	RD320T62W	RD320T64W	RD320T65W	RD320T66W	1000 1200 1600 2000	RP6R20A100 RP6R20A120 RP6R20A160 RP6R20A200
2500	RD325T61W	RD325T63W	RD325T62W	RD325T64W	RD325T65W	RD325T66W	1600 2000 2500	RP6R25A160 RP6R25A200 RP6R25A250
3-Pole High Interrupting Capacity 600 Volt Ac Rated 100 kAIC @ 480 Vac								
1600	RDC316T61W	RDC316T63W	RDC316T62W	RDC316T64W	RDC316T65W	RDC316T66W	800 1000 1200 1600	RP6R16A080 RP6R16A100 RP6R16A120 RP6R16A160
2000	RDC320T61W	RDC320T63W	RDC320T62W	RDC320T64W	RDC320T65W	RDC320T66W	1000 1200 1600 2000	RP6R20A100 RP6R20A120 RP6R20A160 RP6R20A200
2500	RDC325T61W	RDC325T63W	RDC325T62W	RDC325T64W	RDC325T65W	RDC325T66W	1600 2000 2500	RP6R25A160 RP6R25A200 RP6R25A250

Instruction Leaflet/FRED Number 29C107 for Breaker; Number 29886 for Digitrip 610 Trip Unit

100% Rated Digitrip RMS 610 Circuit Breakers

The NEC allows the breaker to be rated at 100% of its frame size in an assembly, provided that 90°C wire is applied at 75°C ampacity. Order as individual components: Breaker Frame (which includes Trip Unit) and Rating Plug.

Maximum Continuous Ampere Rating @ 40°C	Circuit Breaker Frame Only						Digitrip Rating Plug Only	
	L – Adjustable Long Delay Pickup (I_r) with Adjustable Long Delay Time S – Adjustable Short Delay Pickup with Adjustable Short Delay Time (I^2t or Flat Response) I – Adjustable Instantaneous Pickup G – Adjustable Ground Fault Pickup with Adjustable Ground Fault Time Delay (I^2t or Flat Response)						Fixed Rating Plug	
	LI	LS	LSI	LIG	LSG	LSIG	Rated Current (I_n)	Catalog Number
	Catalog Number							
3-Pole Standard Interrupting Capacity 600 Volt Ac Rated 65 kAIC @ 480 Vac								
1600	CRD316T61W	CRD316T63W	CRD316T62W	CRD316T64W	CRD316T65W	CRD316T66W	800 1000 1200 1600	RP6R16A080 RP6R16A100 RP6R16A120 RP6R16A160
2000	CRD320T61W	CRD320T63W	CRD320T62W	CRD320T64W	CRD320T65W	CRD320T66W	1000 1200 1600 2000	RP6R20A100 RP6R20A120 RP6R20A160 RP6R20A200
3-Pole High Interrupting Capacity 600 Volt Ac Rated 100 kAIC @ 480 Vac								
1600	CRDC316T61W	CRDC316T63W	CRDC316T62W	CRDC316T64W	CRDC316T65W	CRDC316T66W	800 1000 1200 1600	RP6R16A080 RP6R16A100 RP6R16A120 RP6R16A160
2000	CRDC320T61W	CRDC320T63W	CRDC320T62W	CRDC320T64W	CRDC320T65W	CRDC320T66W	1000 1200 1600 2000	RP6R20A100 RP6R20A120 RP6R20A160 RP6R20A200

Instruction Leaflet/FRED Number 29C107 for Breaker; Number 29886 for Digitrip 610 Trip Unit

Digitrip RMS 810 Electronic Circuit Breakers with Interchangeable Rating Plugs

Order as individual components: Breaker Frame (which includes Trip Unit) and Rating Plug.

Maximum Continuous Ampere Rating @ 40°C	Circuit Breaker Frame Only						Digitrip Rating Plug Only	
	L – Adjustable Long Delay Pickup (I_r) with Adjustable Long Delay Time S – Adjustable Short Delay Pickup with Adjustable Short Delay Time (I^2t or Flat Response) I – Adjustable Instantaneous Pickup G – Adjustable Ground Fault Pickup with Adjustable Ground Fault Time Delay (I^2t or Flat Response)						Fixed Rating Plug	
							Rated Current (I_n)	Catalog Number
	LI	LS	LSI	LIG	LSG	LSIG		
	Catalog Number							
3-Pole Standard Interrupting Capacity 600 Volt Ac Rated 65 kAIC @ 480 Vac								
1600	RD316T81W	RD316T83W	RD316T82W	RD316T84W	RD316T85W	RD316T86W	800 1000 1200 1600	RP6R16A080 RP6R16A100 RP6R16A120 RP6R16A160
2000	RD320T81W	RD320T83W	RD320T82W	RD320T84W	RD320T85W	RD320T86W	1000 1200 1600 2000	RP6R20A100 RP6R20A120 RP6R20A160 RP6R20A200
2500	RD325T81W	RD325T83W	RD325T82W	RD325T84W	RD325T85W	RD325T86W	1600 2000 2500	RP6R25A160 RP6R25A200 RP6R25A250
3-Pole High Interrupting Capacity 600 Volt Ac Rated 100 kAIC @ 480 Vac								
1600	RDC316T81W	RDC316T83W	RDC316T82W	RDC316T84W	RDC316T85W	RDC316T86W	800 1000 1200 1600	RP6R16A080 RP6R16A100 RP6R16A120 RP6R16A160
2000	RDC320T81W	RDC320T83W	RDC320T82W	RDC320T84W	RDC320T85W	RDC320T86W	1000 1200 1600 2000	RP6R20A100 RP6R20A120 RP6R20A160 RP6R20A200
2500	RDC325T81W	RDC325T83W	RDC325T82W	RDC325T84W	RDC325T85W	RDC325T86W	1600 2000 2500	RP6R25A160 RP6R25A200 RP6R25A250

Instruction Leaflet/FRED Number 29C107 for Breaker; Number 29888 for Digitrip 810 Trip Unit

100% Rated Digitrip RMS 810 Circuit Breakers

The NEC allows the breaker to be rated at 100% of its frame size in an assembly, provided that 90°C wire is applied at 75°C ampacity. Order as individual components: Breaker Frame (which includes Trip Unit) and Rating Plug.

Maximum Continuous Ampere Rating @ 40°C	Circuit Breaker Frame Only						Digitrip Rating Plug Only	
	L – Adjustable Long Delay Pickup (I_r) with Adjustable Long Delay Time S – Adjustable Short Delay Pickup with Adjustable Short Delay Time (I^2t or Flat Response) I – Adjustable Instantaneous Pickup G – Adjustable Ground Fault Pickup with Adjustable Ground Fault Time Delay (I^2t or Flat Response)						Fixed Rating Plug	
	LI	LS	LSI	LIG	LSG	LSIG	Rated Current (I_n)	Catalog Number
	Catalog Number							
3-Pole Standard Interrupting Capacity 600 Volt Ac Rated 65 kAIC @ 480 Vac								
1600	CRD316T81W	CRD316T83W	CRD316T82W	CRD316T84W	CRD316T85W	CRD316T86W	800 1000 1200 1600	RP6R16A080 RP6R16A100 RP6R16A120 RP6R16A160
2000	CRD320T81W	CRD320T83W	CRD320T82W	CRD320T84W	CRD320T85W	CRD320T86W	1000 1200 1600 2000	RP6R20A100 RP6R20A120 RP6R20A160 RP6R20A200
3-Pole High Interrupting Capacity 600 Volt Ac Rated 100 kAIC @ 480 Vac								
1600	CRDC316T81W	CRDC316T83W	CRDC316T82W	CRDC316T84W	CRDC316T85W	CRDC316T86W	800 1000 1200 1600	RP6R16A080 RP6R16A100 RP6R16A120 RP6R16A160
2000	CRDC320T81W	CRDC320T83W	CRDC320T82W	CRDC320T84W	CRDC320T85W	CRDC320T86W	1000 1200 1600 2000	RP6R20A100 RP6R20A120 RP6R20A160 RP6R20A200

Instruction Leaflet/FRED Number 29C107 for Breaker; Number 29888 for Digitrip 810 Trip Unit

Digitrip RMS 910 Electronic Circuit Breakers with Interchangeable Rating Plugs

Order as individual components: Breaker Frame (which includes Trip Unit) and Rating Plug.

Maximum Continuous Ampere Rating @ 40°C	Circuit Breaker Frame Only						Digitrip Rating Plug Only	
	L – Adjustable Long Delay Pickup (I_r) with Adjustable Long Delay Time S – Adjustable Short Delay Pickup with Adjustable Short Delay Time (I^2t or Flat Response) I – Adjustable Instantaneous Pickup G – Adjustable Ground Fault Pickup with Adjustable Ground Fault Time Delay (I^2t or Flat Response)						Fixed Rating Plug	
							Rated Current (I_n)	Catalog Number
	LI	LS	LSI	LIG	LSG	LSIG		
	Catalog Number							
3-Pole Standard Interrupting Capacity 600 Volt Ac Rated 65 kAIC @ 480 Vac								
1600	RD316T91W	RD316T93W	RD316T92W	RD316T94W	RD316T95W	RD316T96W	800 1000 1200 1600	RP6R16A080 RP6R16A100 RP6R16A120 RP6R16A160
2000	RD320T91W	RD320T93W	RD320T92W	RD320T94W	RD320T95W	RD320T96W	1000 1200 1600 2000	RP6R20A100 RP6R20A120 RP6R20A160 RP6R20A200
2500	RD325T91W	RD325T93W	RD325T92W	RD325T94W	RD325T95W	RD325T96W	1600 2000 2500	RP6R25A160 RP6R25A200 RP6R25A250
3-Pole High Interrupting Capacity 600 Volt Ac Rated 100 kAIC @ 480 Vac								
1600	RDC316T91W	RDC316T93W	RDC316T92W	RDC316T94W	RDC316T95W	RDC316T96W	800 1000 1200 1600	RP6R16A080 RP6R16A100 RP6R16A120 RP6R16A160
2000	RDC320T91W	RDC320T93W	RDC320T92W	RDC320T94W	RDC320T95W	RDC320T96W	1000 1200 1600 2000	RP6R20A100 RP6R20A120 RP6R20A160 RP6R20A200
2500	RDC325T91W	RDC325T93W	RDC325T92W	RDC325T94W	RDC325T95W	RDC325T96W	1600 2000 2500	RP6R25A160 RP6R25A200 RP6R25A250

Instruction Leaflet/FRED Number 29C107 for Breaker; Number 29889 for Digitrip 910 Trip Unit

100% Rated Digitrip RMS 910 Circuit Breakers

The NEC allows the breaker to be rated at 100% of its frame size in an assembly, provided that 90°C wire is applied at 75°C ampacity. Order as individual components: Breaker Frame (which includes Trip Unit) and Rating Plug.

Maximum Continuous Ampere Rating @ 40°C	Circuit Breaker Frame Only						Digitrip Rating Plug Only	
	L – Adjustable Long Delay Pickup (I_r) with Adjustable Long Delay Time S – Adjustable Short Delay Pickup with Adjustable Short Delay Time (I^2t or Flat Response) I – Adjustable Instantaneous Pickup G – Adjustable Ground Fault Pickup with Adjustable Ground Fault Time Delay (I^2t or Flat Response)						Fixed Rating Plug	
	LI	LS	LSI	LIG	LSG	LSIG	Rated Current (I_n)	Catalog Number
	Catalog Number							
3-Pole Standard Interrupting Capacity 600 Volt Ac Rated 65 kAIC @ 480 Vac								
1600	**CRD316T91W**	**CRD316T93W**	**CRD316T92W**	**CRD316T94W**	**CRD316T95W**	**CRD316T96W**	800 1000 1200 1600	**RP6R16A080** **RP6R16A100** **RP6R16A120** **RP6R16A160**
2000	**CRD320T91W**	**CRD320T93W**	**CRD320T92W**	**CRD320T94W**	**CRD320T95W**	**CRD320T96W**	1000 1200 1600 2000	**RP6R20A100** **RP6R20A120** **RP6R20A160** **RP6R20A200**
3-Pole High Interrupting Capacity 600 Volt Ac Rated 100 kAIC @ 480 Vac								
1600	**CRDC316T91W**	**CRDC316T93W**	**CRDC316T92W**	**CRDC316T94W**	**CRDC316T95W**	**CRDC316T96W**	800 1000 1200 1600	**RP6R16A080** **RP6R16A100** **RP6R16A120** **RP6R16A160**
2000	**CRDC320T91W**	**CRDC320T93W**	**CRDC320T92W**	**CRDC320T94W**	**CRDC320T95W**	**CRDC320T96W**	1000 1200 1600 2000	**RP6R20A100** **RP6R20A120** **RP6R20A160** **RP6R20A200**

Instruction Leaflet/FRED Number 29C107 for Breaker; Number 29889 for Digitrip 910 Trip Unit

Digitrip OPTIM Electronic Circuit Breakers with Interchangeable Rating Plugs

Order as individual components: Breaker Frame (which includes Trip Unit) and Rating Plug.

Maximum Continuous Ampere Rating @ 40°C	Circuit Breaker Frame Only				Digitrip OPTIM Rating Plug Only	
	L – Adjustable Long Delay Pickup (I_r) with Adjustable Long Delay Time S – Adjustable Short Delay Pickup with Adjustable Short Delay Time (I^2t or Flat Response) I – Adjustable Instantaneous Pickup G – Adjustable Ground Fault Pickup with Adjustable Ground Fault Time Delay (I^2t or Flat Response) A – Adjustable Ground Fault Alarm with Adjustable Ground Fault Time Delay (I^2t or Flat Response)				Fixed Rating Plug	
	LSIA 750	LSIG 750	LSIA 1050	LSIG 1050	Ampere Rating	Catalog Number
	Catalog Number					
3-Pole Standard Interrupting Capacity 600 Volt Ac Rated 65 kAIC @ 480 Vac						
1600	RD316T77W	RD316T76W	RD316T107W	RD316T106W	800 1000 1200 1600	0RPR16A080 0RPR16A100 0RPR16A120 0RPR16A160
2000	RD320T77W	RD320T76W	RD320T107W	RD320T106W	1000 1200 1600 2000	0RPR20A100 0RPR20A120 0RPR20A160 0RPR20A200
2500	RD325T77W	RD325T76W	RD325T107W	RD325T106W	1600 2000 2500	0RPR25A160 0RPR25A200 0RPR25A250
3-Pole High Interrupting Capacity 600 Volt Ac Rated 100 kAIC @ 480 Vac						
1600	RDC316T77W	RDC316T76W	RDC316T107W	RDC316T106W	800 1000 1200 1600	0RPR16A080 0RPR16A100 0RPR16A120 0RPR16A160
2000	RDC320T77W	RDC320T76W	RDC320T107W	RDC320T106W	1000 1200 1600 2000	0RPR20A100 0RPR20A120 0RPR20A160 0RPR20A200
2500	RDC325T77W	RDC325T76W	RDC325T107W	RDC325T106W	1600 2000 2500	0RPR25A160 0RPR25A200 0RPR25A250

Instruction Leaflet/FRED Number 29C107 for Breaker; Number 29C891 for OPTIM Trip Unit

100% Rated 600 Volt AC Digitrip OPTIM Circuit Breakers with Interchangeable Rating Plugs

Order as individual components: Breaker Frame (which includes Trip Unit) and Rating Plug.

Maximum Continuous Ampere Rating @ 40°C	Circuit Breaker Frame Only				Digitrip OPTIM Rating Plug Only	
	L – Adjustable Long Delay Pickup (I_r) with Adjustable Long Delay Time S – Adjustable Short Delay Pickup with Adjustable Short Delay Time (I^2t or Flat Response) I – Adjustable Instantaneous Pickup G – Adjustable Ground Fault Pickup with Adjustable Ground Fault Time Delay (I^2t or Flat Response) A – Adjustable Ground Fault Alarm with Adjustable Ground Fault Time Delay (I^2t or Flat Response)				Fixed Rating Plug	
	LSIA 750	LSIG 750	LSIA 1050	LSIG 1050	Ampere Rating	Catalog Number
3-Pole Standard Interrupting Capacity 600 Volt Ac Rated 65 kAIC @ 480 Vac						
1600	CRD316T77W	CRD316T76W	CRD316T107W	CRD316T106W	800 1000 1200 1600	0RPR16A080 0RPR16A100 0RPR16A120 0RPR16A160
2000	CRD320T77W	CRD320T76W	CRD320T107W	CRD320T106W	1000 1200 1600 2000	0RPR20A100 0RPR20A120 0RPR20A160 0RPR20A200
3-Pole High Interrupting Capacity 600 Volt Ac Rated 100 kAIC @ 480 Vac						
1600	CRDC316T77W	CRDC316T76W	CRDC316T107W	CRDC316T106W	800 1000 1200 1600	0RPR16A080 0RPR16A100 0RPR16A120 0RPR16A160
2000	CRDC320T77W	CRDC320T76W	CRDC320T107W	CRDC320T106W	1000 1200 1600 2000	0RPR20A100 0RPR20A120 0RPR20A160 0RPR20A200

Instruction Leaflet/FRED Number 29C107 for Breaker; Number 29C891 for OPTIM Trip Unit

Molded Case Switches

For UL listed, series tested molded case switch application data, refer to Cutler-Hammer.

Continuous Ampere Rating @ 40°C	Complete without Terminals	
	3-Pole	4-Pole
	Catalog Number	
1600	Type RD – HIgh Instantaneous (K)	
	RD316WK	RD416WK
2000	Type RD – HIgh Instantaneous (K)	
	RD320WK	RD420WK
2500	Type RD – HIgh Instantaneous (K)	
	–	–

Note: Molded case switch may trip above 17500 amperes.

Instruction Leaflet/FRED Number 29C106 for Molded Case Switch

Line and Load Terminals

Line and load terminals provide wire connecting capabilities for specific ranges of continuous current ratings and wire types. All terminals comply with Underwriters Laboratories, Inc. Standards UL486A and UL486B and CSA C22.2 No. 65M. Unless otherwise specified, R-frame circuit breaker line load terminals are shipped separately for field installation.

Ordering Information

R-frame circuit breakers have Cu/Al terminals as standard and Cu only terminals as an option. Specify if factory installation is required.

Line and Load Terminals

Maximum Breaker Amperes	Terminal Body Material	Wire Type	Hardware	AWG/kcmil Wire Range/No. Conductors	Metric Wire Range mm^2	Catalog Number
Wire Terminals						
1600	Aluminum	Cu/Al	English	500-1000 (4)	300-500	**TA1600RD**
1600	Copper	Cu	English	1-600 (4)	50-300	**T1600RD**
2000	Aluminum	Cu/Al	English	2-600 (6)	35-300	**TA2000RD**①
Rear Connectors						
2000	Copper	–	English	–	–	**B2016RD**
2000	Copper	–	English	–	–	**B2016RDL**②
2500	Copper	–	English	–	–	**B2500RD**③

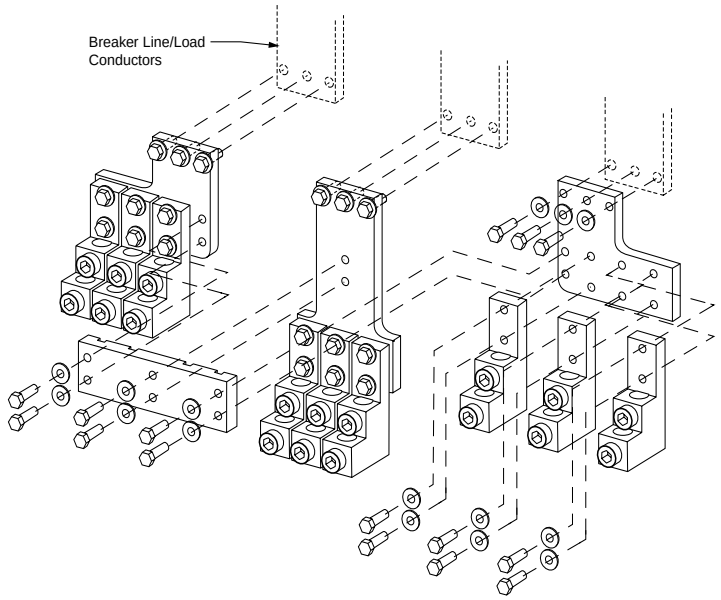

TA2000RD

① Catalog number includes bus connection, terminals, and hardware for either line side or load side of 3-pole breaker.

② For use with 100% rated 1600A and 2000A frame. Do not order separately unless for replacement purposes. Is included in breaker carton when 100% rated device is ordered.

③ For use with 2500-amp frame. Do not order separately unless for replacement purposes. Included in breaker carton when 2500A breaker is ordered.

Catalog Numbering System

This information is presented only as an aid to understanding catalog numbers. It is not to be used to build catalog numbers for circuit breakers or trip units.

Circuit Breaker/Frame Catalog Number

RD 3 16 T32 W

Circuit Breaker/ Frame Type	Number of Poles	Circuit Breaker/ Frame Ampere Rating	Trip Type①	Suffix
RD RDC CRD CRDC	3: 3 Poles 4: 4 Poles	16: 1600A 20: 2000A 25: 2500A	T32: Digitrip RMS 310 LSI T53: Digitrip RMS 510 LS T65: Digitrip RMS 610 LSG T86: Digitrip RMS 810 LSIG T96: Digitrip RMS 910 LSIG T77: Digitrip OPTIM 750 LSIA T106: Digitrip OPTIM 1050 LSIG	W: Without Terminals P: 100% Protected Neutral Pole R: Ground Fault Remote (310 Only) K: Molded Case Switch

Dimensions/Weights

Dimensions, Inches (mm)

Number of Poles	Width	Height	Depth
3	15.5 (394)	16 (406)	9.75 (248)
4	20 (508)	16 (406)	9.75 (248)

Approximate Shipping Weight, Lbs. (kg)

Breaker Type	Complete Breaker	
	Number of Poles	
	3	4
1600A		
RD, CRD, RDC, CRDC	102 (46.266)	135 (61.235)
2000A		
RD, RDC	102 (46.266)	135 (61.235)
CRD, CRDC	130 (58.967)	175 (79.378)
2500A		
RD, RDC	135 (61.235)	182 (82.553)

① For complete list of available trip types refer to pages 91 through 103.

Allowable Accessory Combinations

Different combinations of accessories can be supplied, depending on the types of accessories and the number of poles in the circuit breaker.

	Reference Page	3-Pole			4-Pole			
		Left	Center	Right	Left	Center	Right	Neu.
Internal Accessories								
Alarm Lockout (Make/Break)	141			■			■	
Alarm Lockout (2Make/2Break)	141			■			■	
Auxiliary Switch (2A, 2B)	144			■			■	
Auxiliary Switch (4A, 4B)	144			■			■	
Shunt Trip – Standard	151			■			■	
Shunt Trip – Low Energy	152			■			■	
Undervoltage Release Mechanism	159			■			■	
Accessory Terminal Block②	160			■				■
External Accessories								
Base Mounting Hardware	163							
Padlockable Handle Lock Hasp	169		●			●		
Key Interlock Kit	170		■			■		
Walking Beam Interlock	171							
Electrical (Motor) Operator	173		■			■		
Drawout Cassette	164		●					
Handle Mechanisms	178		■			■		
Handle Extension①	182		■			■		
Solid-State (Electronic) Portable Test Kit (310 Only)	184		●			●		
OPTIM System Components								
Breaker Interface Module (BIM)	185		●					
Digitrip OPTIMizer	185		●					
Auxiliary Power Module	185		●					
Cutler-Hammer PowerNet Software	185		●					
Modifications (Refer to Cutler-Hammer)								
Special Calibration	186		●				●	
Moisture Fungus Treatment	186		●				●	
Freeze-Tested Circuit Breakers	186		●				●	
Marine Application	186		●				●	

■ Applicable in indicated pole position ● Accessory available/Modification available

① Included with breaker.
② Mounts outside breaker.

Series C Motor Circuit Protectors

General Information

Designated as the Cutler-Hammer Types GMCP, HMCP, the Series C instantaneous-only motor circuit protector (MCP) is available in ratings from 3A to 600A for motor starter sizes 0 through 6. The MCP is designed to comply with the applicable requirements of Underwriters Laboratories, Inc. Standard UL489, Canadian Standards Association Standard C22.2 No. 5, and International Electrotechnical Commission Recommendations IEC 157-1.

An innovative design of internal components allows higher MCP-starter combination interrupting ratings. The MCP is marked to permit proper electrical application within the assigned equipment ratings.

The MCP is a recognized component (UL File E7819) and complies with the applicable requirements of Underwriters Laboratories, Inc. Standard UL489. It is also designed to comply with the applicable requirements of Canadian Standards Association Standard C22.2 No. 5, International Electrotechnical Commission Recommendations IEC 157-1, and nameplates bear the CE marking.

Catalog Numbering System

This information is presented only as an aid to understanding catalog numbers. It is not to be used to build catalog numbers for circuit breakers or trip units.

Motor Circuit Protector Catalog Number

HMCP 003 A0 C

Motor Circuit Protective Type	Continuous Ampere Rating	Magnetic Trip Range/NEMA Starter Size	Suffix
HMCP: 3 Poles	003	A0: 9-30/0	C: Non-Aluminum Terminals
HM2P: 2 Poles①	007	C0: 21-70/0	W: W/O Terminals
HMCPS: 3 Poles	015	E0: 45-150/0	X: Load Terminals Only
	025	D0: 40-60/0	Y: Line Terminals Only
	030	H1: 90-300/1	S: Stainless Steel Terminals (150A Frame Only)
	050	G2: 80-120/2	No Suffix: Standard Terminals on Line and Load
		K2: 150-500/2	
	070	J2: 115-170/2	
		M2: 210-700/2	
	100	L3: 160-240/3	
		R3: 300-1000/3	
	150	T4: 450-1500/4	
		U4: 750-2500/4	
	250	A5: 350-700/5	
		C5: 450-900/5	
	400	D5: 500-1000/5	
		F5: 625-1250/5	
		G5: 750-1500/5	
		J5: 875-1750/5	
		K5: 1000-2000/5	
		L5: 1125-2250/5	
		W5: 1250-2500/5	
		N5: 1500-3000/5	
		R5: 1750-3500/5	
		X5: 2000-4000/5	
	600	L6: 1800-6000/6 Electronic)	

① On J- and K-Frame HMCPs only.

GMCP 003 A0 C

Motor Circuit Protective Device	Continuous Ampere Rating	Magnetic Trip Range/NEMA Starter Size	Suffix
GMCP: 3 Poles	003	A0: 15-30/0	C: Non-Aluminum Terminals
	007	C0: 35-70/0	
	015	E0: 75-150/0	
	030	H1: 150-300/1	
	050	K2: 250-500/2	
	060	J2: 300-600/2	
	063	M2: 320-630/2	

G-Frame

480 Vac Maximum, 250 Vdc Maximum

MCP Catalog Number	NEMA Starter Size	Continuous Amperes	Cam Setting	Motor Full Load Center Amperes⑤	MCP Trip Setting
GMCP003A0C	0	3	A	1.1 - 1.2	15
			B	1.3 - 1.5	18
			C	1.6 - 1.7	21
			D	1.8 - 1.9	24
			E	2.0 - 2.2	27
			F	2.3 - 2.5	30
GMCP007C0C	0	7	A	2.6 - 3.1	35
			B	3.2 - 3.6	42
			C	3.7 - 3.9	49
			D	4.3 - 4.7	56
			E	4.8 - 5.2	63
			F	5.3 - 5.7	70
GMCP015E0C	0	15	A	5.7 - 6.8	75
			B	6.9 - 7.9	90
			C	8.0 - 9.1	105
			D	9.2 - 10.3	120
			E	10.4 - 11.4	135
			F	11.5 - 12.6	150
GMCP030H1C	1	30	A	11.5 - 13.7	150
			B	13.8 - 16.0	180
			C	16.1 - 18.3	210
			D	18.4 - 20.6	240
			E	20.7 - 22.9	270
			F	23.0 - 25.2	300
GMCP050K2C	2	50	A	19.3 - 22.9	250
			B	23.0 - 26.8	300
			C	26.9 - 30.6	350
			D	30.7 - 34.5	400
			E	34.6 - 38.3	450
			F	38.4 - 42.1	500
GMCP060J2C	3	60	A	23.1 - 27.5	300
			B	27.7 - 32.2	360
			C	32.3 - 36.7	420
			D	36.9 - 41.4	480
			E	41.5 - 46.0	540
			F	46.2 - 50.5	600
GMCP063M2C	3	63	A	24.2 - 32.1	320
			B	29.1 - 34.8	380
			C	33.9 - 39.4	440
			D	38.8 - 46.4	500
			E	43.6 - 48.9	570
			F	48.5 - 53.7	630

Instruction Leaflet/FRED Number 15579

Modifications for GMCP

Internal Accessories

These modifications must be factory installed①.

Type Accessory	Electrical Ratings			Contact Arrangement	Style Number	Factory Suffix
	Volts	Frequency	Amperes			
Shunt Trip③	120	50/60 Hz	1.1		1373D62G18	S5
Shunt Trip③	240	50/60 Hz	2.1		1373D62G19	S6
Auxiliary Switch④	240	50/60 Hz	6.0	1a/1b	1288C74G03	A3
Auxiliary Switch④	240	50/60 Hz	6.0	2a/2b	1288C73G03	A6
Alarm Switch④	240	50/60 Hz	6.0	Make/Break	1288C75G03	B3
Alarm Switch④ Alarm Switch Combination	240	50/60 Hz	6.0	1a/1b Make/Break	1288C76G09	B13

Note: No UVR available on GMCP.

Instruction Leaflet/FRED Number 15552 for Alarm Switch
Instruction Leaflet/FRED Number 15551 for Auxiliary Switch
Instruction Leaflet/FRED Number 15550 for Shunt Trip

External Mounted Accessories

Description	Number Units in Package	Style Number
Lock Dog (Non-Padlockable)	1	1294C01H01
Mounting Hardware	1	624B375G23
DIN Rail Adapter②	10	1225C79G02

Instruction Leaflet/FRED Number 29C191 (DIN Rail Adapter)

Vari-Depth Handle Mechanism⑥

Description	Catalog Number
For Type 1 use	HRGMV11L
For Type 3R, 4X, 12 use	HRGMV14L
Close Coupled Black with Gray Handle	HRGMC10
Close Coupled Red with Yellow Handle	HRGMC30

① Only one accessory may be installed in GMCP.
② For use with standard 35 mm DIN rail such as, 35 x 7.5 or 15 mm per DIN EN50022.
③ LH only.
④ RH only.
⑤ Motor FLA ranges are typical. The corresponding trip setting is at 13 times the minimum FLA value shown. Where a 13 times setting is required for an intermediate FLA value, alternate cam settings and/or MCP ratings should be used.
⑥ For use with GMCP only.

F-Frame

600 Vac Maximum, 250 Vdc Maximum

MCP Catalog Number	NEMA Starter Size	Continuous Amperes	Cam Setting	Motor Full Load Center Amperes①	MCP Trip Setting②
HMCP003A0C	0	3	A	.69 - .91	9
			B	.92 - 1.0	12
			C	1.1 - 1.2	15
			D	1.3 - 1.5	18
			E	1.6 - 1.7	21
			F	1.8 - 1.9	24
			G	2.0 - 2.2	27
			H	2.3 - 2.5	30
HMCP007C0C	0	7	A	1.5 - 2.0	21
			B	2.1 - 2.5	28
			C	2.6 - 3.1	35
			D	3.2 - 3.6	42
			E	3.7 - 3.9	49
			F	4.3 - 4.7	56
			G	4.8 - 5.2	63
			H	5.3 - 5.7	70
HMCP015E0C	0	15	A	3.4 - 4.5	45
			B	4.6 - 5.6	60
			C	5.7 - 6.8	75
			D	6.9 - 7.9	90
			E	8.0 - 9.1	105
			F	9.2 - 10.3	120
			G	10.4 - 11.4	135
			H	11.5 - 12.6	150
HMCP030H1C	1	30	A	6.9 - 9.1	90
			B	9.2 - 11.4	120
			C	11.5 - 13.7	150
			D	13.8 - 16.0	180
			E	16.1 - 18.3	210
			F	18.4 - 20.6	240
			G	20.7 - 22.9	270
			H	23.0 - 25.2	300
HMCP050K2C	2	50	A	11.5 - 15.2	150
			B	15.3 - 19.1	200
			C	19.2 - 22.9	250
			D	23.0 - 26.8	300
			E	26.9 - 30.6	350
			F	30.7 - 34.5	400
			G	34.6 - 38.3	450
			H	38.4 - 42.1	500
HMCP070M2C	2	70	A	16.1 - 21.4	210
			B	21.5 - 26.8	280
			C	26.9 - 32.2	350
			D	32.3 - 37.5	420
			E	37.6 - 42.9	490
			F	43.0 - 48.3	560
			G	48.4 - 53.7	630
			H	53.8 - 59.1	700
HMCP100R3C	3	100	A	23.0 - 30.6	300
			B	30.7 - 38.3	400
			C	38.4 - 46.0	500
			D	46.1 - 53.7	600
			E	53.8 - 61.4	700
			F	61.5 - 69.1	800
			G	69.2 - 76.8	900
			H	76.9 - 84.5	1000

① Motor FLA ranges are typical. The corresponding trip setting is at 13 times the minimum FLA value shown. Where a 13 times setting is required for an intermediate FLA value, alternate cam settings and/or MCP ratings should be used.

② For Dc applications, actual trip levels are approximately 40% higher than values shown.

③ Settings above 130 amperes are for special applications. NEC Article 430-110(a) requires the ampere rating of the disconnecting means to be not less than 115% of the motor full load ampere rating.

F-Frame *(Continued)*

600 Vac Maximum, 250 Vdc Maximum

MCP Catalog Number	NEMA Starter Size	Continuous Amperes	Cam Setting	Motor Full Load Center Amperes①	MCP Trip Setting②
HMCP150T4C	4	150	A	34.6 - 46.0	450
			B	46.1 - 57.5	600
			C	57.6 - 69.1	750
			D	69.2 - 80.6	900
			E	80.7 - 92.2	1050
			F	92.3 -103.7	1200
			G	103.8 -115.2	1350
			H	115.3 -126.7	1500
HMCP150U4C	4	150	A	57.0 - 75.0	750
			B	76.0 - 95.0	1000
			C	96.0 -114.0	1250
			D	115.0 -130.7	1500
			E	③	1750
			F	③	2000
			G	③	2250
			H	③	2500

Instruction Leaflet/FRED Number 29C401

Special Low Magnetic Protection Application MCP

600 Vac Maximum, 250 Vdc Maximum

MCP Catalog Number	NEMA Starter Size	Continuous Amperes	Cam Setting	Motor Full Load Center Amperes	MCP Trip Setting②
HMCP025D0C	–	25A	A	–	40
	–		B	–	43
	–		C	–	46
	–		D	–	49
	–		E	–	52
	–		F	–	55
	–		G	–	58
	–		H	–	60
HMCP050G2C	–	50A	A	–	80
	–		B	–	87
	–		C	–	93
	–		D	–	98
	–		E	–	103
	–		F	–	109
	–		G	–	115
	–		H	–	120
HMCP070J2C	–	70A	A	–	115
	–		B	–	122
	–		C	–	130
	–		D	–	139
	–		E	–	145
	–		F	–	153
	–		G	–	160
	–		H	–	170
HMCP100L3C	–	100A	A	–	160
	–		B	–	174
	–		C	–	185
	–		D	–	196
	–		E	–	207
	–		F	–	218
	–		G	–	229
	–		H	–	240

Instruction Leaflet/FRED Number 29C407

MCPs for Application with Motor Starters Equipped with Electronic Overload Relays

600 Vac Maximum, 250 Vdc Maximum

MCP Catalog Number	NEMA Starter Size	Continuous Amperes	Cam Setting	Motor Full Load Center Amperes①	MCP Trip Setting②
HMCPS003A0C	0	3	A	.69 - .91	9
			B	.92 - 1.0	12
			C	1.1 - 1.2	15
			D	1.3 - 1.5	18
			E	1.6 - 1.7	21
			F	1.8 - 1.9	24
			G	2.0 - 2.2	27
			H	2.3 - 2.5	30
HMCPS007C0C	0	7	A	1.5 - 2.0	21
			B	2.1 - 2.5	28
			C	2.6 - 3.1	35
			D	3.2 - 3.6	42
			E	3.7 - 3.9	49
			F	4.3 - 4.7	56
			G	4.8 - 5.2	63
			H	5.3 - 5.7	70
HMCPS015E0C	0	15	A	3.4 - 4.5	45
			B	4.6 - 5.6	60
			C	5.7 - 6.8	75
			D	6.9 - 7.9	90
			E	8.0 - 9.1	105
			F	9.2 - 10.3	120
			G	10.4 - 11.4	135
			H	11.5 - 12.6	150
HMCPS030H1C	1	30	A	6.9 - 9.1	90
			B	9.2 - 11.4	120
			C	11.5 - 13.7	150
			D	13.8 - 16.0	180
			E	16.1 - 18.3	210
			F	18.4 - 20.6	240
			G	20.7 - 22.9	270
			H	23.0 - 25.2	300
HMCPS050K2C	2	50	A	11.5 - 15.2	150
			B	15.3 - 19.1	200
			C	19.2 - 22.9	250
			D	23.0 - 26.8	300
			E	26.9 - 30.6	350
			F	30.7 - 34.5	400
			G	34.6 - 38.3	450
			H	38.4 - 42.1	500
HMCPS100R3C	3	100	A	23.0 - 30.6	300
			B	30.7 - 38.3	400
			C	38.4 - 46.0	500
			D	46.1 - 53.7	600
			E	53.8 - 61.4	700
			F	61.5 - 69.1	800
			G	69.2 - 76.8	900
			H	76.9 - 84.5	1000
HMCPS150T4C	4	150	A	34.6 - 46.0	450
			B	46.1 - 57.5	600
			C	57.6 - 69.1	750
			D	69.2 - 80.6	900
			E	80.7 - 92.2	1050
			F	92.3 -103.7	1200
			G	103.8 -115.2	1350
			H	115.3 -126.7	1500
HMCPS150U4C	4	150	A	57.0 - 75.0	750
			B	76.0 - 95.0	1000
			C	96.0 -114.0	1250
			D	115.0 -130.7	1500
			E	③	1750
			F	③	2000
			G	③	2250
			H	③	2500

Instruction Leaflet/FRED Number 29C401

Type ELC Current Limiter Attachment (Size 0-4)

The type ELC current limiter attachment for the Series C MCP is designed to provide increased interrupting capacity. The combination may be used for the application up to 200,000A symmetrical at 600 Vac making the MCP suitable for use in network distribution systems or other applications where unusually high fault currents are available. The current limiter connects to the load end of the MCP and is provided with terminals suitable for copper or aluminum conductors. (See table).

Limiters are coordinated with the MCP so that normal fault currents are interrupted automatically by the MCP without any damage to the limiter. Only the rare very high fault is opened by the limiter. Faults that are interrupted by the limiter are interrupted by the limiter also magnetically trip the MCP, opening all three poles, preventing single-phase operation.

Each of the three poles of the type ELC limiter is equipped with an indicator that extends when a fault is interrupted by the limiter.

Type ELC Current Limiter Terminal Wire Sizes④

Type ELC Current Limiter Maximum Amperes	Standard Aluminum Terminals		Nonstandard Terminals (Steel)	
	Wire Range AWG	Metric (mm^2)	Wire Range AWG	Metric (mm^2)
50	#14-2	2.5-35	#14-2⑤	2.5-35
100	#1-4/0	50-95	–	–
150	#1-4/0	50-95	–	–

ELC Current Limiter Attachment

MCP Rating (Amperes)	Catalog Number
3	ELC3003R
7	ELC3007R
15	ELC3015R
30	ELC3030R
50	ELC3050R
100	ELC3100R
150	ELC3150R

Instruction Leaflet/FRED Number 29C401

① Motor FLA ranges are typical. The corresponding trip setting is at 13 times the minimum FLA value shown. Where a 13 times setting is required for an intermediate FLA value, alternate cam settings and/or MCP ratings should be used.

② For Dc applications, actual trip levels are approximately 40% higher than values shown.

③ Settings above 130 amperes are for special applications. NEC Article 430-110(a) requires the ampere rating of the disconnecting means to be not less than 115% of the motor full load ampere rating.

④ Terminal wire connectors are UL listed for standard stranded wire sizes as defined in UL486A or UL486B.

⑤ Optional on special order for copper cable only.

J-Frame

600 Vac Maximum, 250 Vdc Maximum

MCP Catalog Number①	NEMA Starter Size	Continuous Amperes	Cam Setting	Motor Full Load Center Amperes②	MCP Trip Setting③
HMCP250A5C	4	250	A	27.0 - 30.7	350
	4		B	30.8 - 33.8	400
	4		C	33.9 - 36.9	440
	5		D	37.0 - 40.3	480
	5		E	40.4 - 43.8	525
	5		F	43.9 - 46.9	570
	5		G	47.0 - 50.7	610
	5		H	50.8 - 53.8	660
	5		I	53.9 - 57.2	700
HMCP250C5C	5	250	A	34.7 - 38.8	450
	5		B	38.9 - 43.4	505
	5		C	43.5 - 47.6	565
	5		D	47.7 - 52.2	620
	5		E	52.3 - 56.5	680
	5		F	56.6 - 60.7	735
	5		G	60.8 - 64.9	790
	5		H	65.0 - 69.2	845
	5		I	69.3 - 73.5	900
HMCP250D5C	5	250	A	38.5 - 43.4	500
	5		B	43.5 - 48.0	565
	5		C	48.1 - 53.0	625
	5		D	53.1 - 57.6	690
	5		E	57.7 - 62.3	750
	5		F	62.4 - 67.3	810
	5		G	67.4 - 71.9	875
	5		H	72.0 - 76.9	935
	5		I	77.0 - 81.6	1000
HMCP250F5C	5	250	A	48.1 - 53.8	625
	5		B	53.9 - 59.9	700
	5		C	60.0 - 66.1	780
	5		D	66.2 - 72.3	860
	5		E	72.4 - 78.4	940
	5		F	78.5 - 83.8	1020
	5		G	83.9 - 89.9	1090
	5		H	90.0 - 96.1	1170
	5		I	96.2 - 102.0	1250
HMCP250G5C	5	250	A	57.7 - 64.6	750
	5		B	64.7 - 71.9	840
	5		C	72.0 - 79.2	935
	5		D	79.3 - 86.5	1030
	5		E	86.6 - 93.8	1125
	5		F	93.9 - 101.1	1220
	5		G	101.2 - 108.4	1315
	5		H	108.5 - 115.3	1410
	5		I	115.4 - 122.4	1500

MCP Catalog Number①	NEMA Starter Size	Continuous Amperes	Cam Setting	Motor Full Load Center Amperes②	MCP Trip Setting③
HMCP250J5C	5	250	A	67.4 - 75.3	875
	5		B	75.4 - 83.8	980
	5		C	83.9 - 92.3	1090
	5		D	92.4 - 100.7	1200
	5		E	100.8 - 109.2	1310
	5		F	109.3 - 117.6	1420
	5		G	117.7 - 126.1	1530
	5		H	126.2 - 134.6	1640
	5		I	134.7 - 142.8	1750
HMCP250K5C	5	250	A	77.0 - 86.6	1000
	5		B	86.6 - 96.1	1125
	5		C	96.2 - 105.7	1250
	5		D	105.8 - 115.3	1375
	5		E	115.4 - 124.9	1500
	5		F	125.0 - 134.6	1625
	5		G	134.7 - 144.2	1750
	5		H	144.3 - 153.8	1875
	5		I	153.9 - 163.3	2000
HMCP250L5C	5	250	A	86.6 - 97.3	1125
	5		B	97.4 - 108.4	1265
	5		C	108.5 - 118.8	1410
	5		D	118.9 - 129.9	1545
	5		E	130.0 - 140.7	1690
	5		F	140.8 - 151.5	1830
	5		G	151.6 - 162.3	1970
	5		H	162.4 - 173.0	2110
	5		I	173.1 - 183.6	2250
HMCP250W5C	5	250	A	96.2 - 108.0	1250
	5		B	108.1 - 119.9	1405
	5		C	120.0 - 132.3	1560
	5		D	132.4 - 144.2	1720
	5		E	144.3 - 156.1	1875
	5		F	156.2 - 168.0	2030
	5		G	168.1 - 179.9	2185
	5		H	180.0 - 192.3	2340
	5		I	192.4 - 204.0	2500

Instruction Leaflet/FRED Number 29C402

① Three-pole catalog numbers shown. Two-pole catalog numbers begin with"HM2P" in place of "HMCP."

② Motor FLA ranges are typical. The corresponding trip setting is at 13 times the minimum FLA value shown. Where a 13 times setting is required for an intermediate FLA value, alternate cam settings and/or MCP ratings should be used.

③ For Dc applications, actual trip levels are approximately 40% higher than values shown.

K-Frame

600 Vac Maximum, 250 Vdc Maximum

MCP Catalog Number①	NEMA Starter Size	Continuous Amperes	Cam Setting	Motor Full Load Center Amperes②	MCP Trip Setting③
HMCP400D5C	5	400	A	38.5 - 43.4	500
	5		B	43.5 - 48.0	565
	5		C	48.1 - 53.0	626
	5		D	53.1 - 57.6	690
	5		E	57.7 - 62.3	750
	5		F	62.4 - 67.3	810
	5		G	67.4 - 71.9	875
	5		H	72.0 - 76.9	935
	5		I	77.0 - 81.6	1000
HMCP400F5C	5	400	A	48.1 - 53.8	625
	5		B	53.9 - 59.9	700
	5		C	60.0 - 66.1	780
	5		D	66.2 - 72.3	860
	5		E	72.4 - 78.4	940
	5		F	78.5 - 83.8	1020
	5		G	83.9 - 89.9	1090
	5		H	90.0 - 96.1	1170
	5		I	96.2 - 102.0	1250
HMCP400G5C	5	400	A	57.7 - 64.6	750
	5		B	64.7 - 71.9	840
	5		C	72.0 - 79.2	935
	5		D	79.3 - 86.5	1030
	5		E	86.6 - 93.8	1125
	5		F	93.9 - 101.1	1220
	5		G	101.2 - 108.4	1315
	5		H	108.5 - 115.3	1410
	5		I	115.4 - 122.4	1500
HMCP400J5C	5	400	A	67.4 - 75.3	875
	5		B	75.4 - 83.8	980
	5		C	83.9 - 92.3	1090
	5		D	92.4 - 100.7	1200
	5		E	100.8 - 109.2	1310
	5		F	109.3 - 117.6	1420
	5		G	117.7 - 126.1	1530
	5		H	126.2 - 134.6	1640
	5		I	134.7 - 142.8	1750
HMCP400K5C	5	400	A	77.0 - 86.5	1000
	5		B	86.6 - 96.1	1125
	5		C	96.2 - 105.7	1250
	5		D	105.8 - 115.3	1375
	5		E	115.4 - 124.9	1500
	5		F	125.0 - 134.6	1625
	5		G	134.7 - 144.2	1750
	5		H	144.3 - 153.8	1875
	5		I	153.9 - 163.3	2000

MCP Catalog Number①	NEMA Starter Size	Continuous Amperes	Cam Setting	Motor Full Load Center Amperes②	MCP Trip Setting③
HMCP400L5C	5	400	A	86.6 - 97.3	1125
	5		B	97.4 - 108.4	1265
	5		C	108.5 - 118.8	1410
	5		D	118.9 - 129.9	1545
	5		E	130.0 - 140.7	1690
	5		F	140.8 - 151.5	1830
	5		G	151.6 - 162.3	1970
	5		H	162.4 - 173.0	2110
	5		I	173.1 - 183.6	2250
HMCP400W5C	5	400	A	96.2 - 108.0	1250
	5		B	108.1 - 119.9	1405
	5		C	120.0 - 132.3	1560
	5		D	132.4 - 144.2	1720
	5		E	144.3 - 156.1	1875
	5		F	156.2 - 168.0	2030
	5		G	168.1 - 179.9	2185
	5		H	180.0 - 192.3	2340
	5		I	192.4 - 204.0	2500
HMCP400N5C	5	400	A	115.4 - 129.9	1500
	5		B	130.0 - 144.2	1690
	5		C	144.3 - 158.4	1875
	5		D	158.5 - 173.0	2060
	5		E	173.1 - 187.6	2250
	5		F	187.7 - 201.9	2440
	5		G	202.0 - 216.1	2625
	5		H	216.2 - 230.7	2810
	5		I	230.8 - 244.9	3000
HMCP400R5C	5	400	A	134.7 - 151.5	1750
	5		B	151.6 - 168.4	1970
	5		C	168.5 - 185.3	2190
	5		D	185.4 - 201.9	2410
	5		E	202.0 - 218.8	2625
	5		F	218.9 - 235.7	2845
	5		G	235.8 - 252.6	3065
	5		H	252.7 - 269.2	3285
	5		I	269.3 - 285.7	3500
HMCP400X5C	5	400	A	153.9 - 173.0	2000
	5		B	173.1 - 192.3	2250
	5		C	192.4 - 211.5	2500
	5		D	211.6 - 230.7	2750
	5		E	230.8 - 249.9	3000
	5		F	250.0 - 269.2	3250
	5		G	269.3 - 288.4	3500
	5		H	288.5 - 307.6	3750
	5		I	307.7 - 326.9	4000

Instruction Leaflet/FRED Number 29C403

L-Frame④

600 Vac Maximum

MCP Catalog Number	NEMA Starter Size	Continuous Amperes	Cam Setting	Motor Full Load Center Amperes②	MCP Trip Setting
HMCP600L6W	6	600	A	138.5 - 184.5	1800
	6		B	184.6 - 230.7	2400
	6		C	230.8 - 276.8	3000
	6		D	276.9 - 323.0	3600
	6		E	323.1 - 369.1	4200
	6		F	369.2 - 415.3	4800
	6		G	415.4 - 461.4	5400
	6		H	461.5 - 507.7	6000

Instruction Leaflet/FRED Number 29C404

① Three-pole catalog numbers shown. Two-pole catalog numbers begin with"HM2P" in place of "HMCP."
② Motor FLA ranges are typical. The corresponding trip setting is at 13 times the minimum FLA value shown. Where a 13 times setting is required for an intermediate FLA value, alternate cam settings and/or MCP ratings should be used.
③ For Dc applications, actual trip levels are approximately 40% higher than values shown.
④ Equipped with electronic trip device.

Typical Series C Earth Leakage Circuit Breaker

General Information

Series C Earth Leakage Breakers offer superior Class 1 ground fault protection and improved ground fault coordination capability.

Earth leakage ground fault protection differs from other types of systems in its level of sensitivity. The sensitivity of traditional devices is limited by the cumulative error of the residual current sensors and the placement of the phase and neutral conductors inside the current sensor.

Leakage breakers are zero sequence sensing devices. They are factory supplied with a single sensor and ground fault relay built-in. This technique allows for protection sensitivities down to the 30 milliampere level.

Leakage breakers are provided with a full complement of easy adjustments. The ground fault pickup setting is adjustable from 0.03 to 30 amperes in eight steps, and the ground fault time delay setting is adjustable from instantaneous to 2.0 seconds in six steps. When the pickup is set to 30 mA, the time delay setting defaults internally to instantaneous only. Increased selectivity provides for improved coordination with upstream and downstream ground fault devices as well as the flexibility to adjust for transient currents.

Applications

Three-Phase, Four-Wire Loads

For three-phase applications with line-to-neutral loads, select 4-pole earth leakage breakers and wire the neutral through the fourth (right) pole.

Three-Phase, Three-Wire Loads

For applications with only three-phase, three-wire, line-to-line connected loads, select 3-pole earth leakage breakers.

Single-Phase Loads

For single-phase, two-wire or three-wire applications, use a 3-pole earth leakage breaker and connect all conductors through the breaker.

Accessories

Optional Factory Installed Internal Accessories

Earth leakage breakers use the same internal accessories as standard F-, J- and K-Frame Series C Breakers. Internal accessories fit in the right-hand pole space and are available as factory modifications only.

Optional External Accessories

Series C Earth Leakage Breakers use the same external accessories as the standard F-, J- and K-Frame circuit breakers.

Selection Guide and Ordering Information

F-Frame Earth Leakage Ground Fault Breakers UL 489 and UL 1053 – Catalog Numbers

Amperes③	25 kA at 480 VAC		65 kA at 480 VAC		100 kA at 480 VAC	
	3-Pole	4-Pole	3-Pole	4-Pole	3-Pole	4-Pole
35	ELFD3035L	ELFD4035L	ELHFD3035L	ELHFD4035L	ELFDC3035L	ELFDC4035L
40	ELFD3040L	ELFD4040L	ELHFD3040L	ELHFD4040L	ELFDC3040L	ELFDC4040L
45	ELFD3045L	ELFD4045L	ELHFD3045L	ELHFD4045L	ELFDC3045L	ELFDC4045L
50	ELFD3050L	ELFD4050L	ELHFD3050L	ELHFD4050L	ELFDC3050L	ELFDC4050L
60	ELFD3060L	ELFD4060L	ELHFD3060L	ELHFD4060L	ELFDC3060L	ELFDC4060L
70	ELFD3070L	ELFD4070L	ELHFD3070L	ELHFD4070L	ELFDC3070L	ELFDC4070L
80	ELFD3080L	ELFD4080L	ELHFD3080L	ELHFD4080L	ELFDC3080L	ELFDC4080L
90	ELFD3090L	ELFD4090L	ELHFD3090L	ELHFD4090L	ELFDC3090L	ELFDC4090L
100	ELFD3100L	ELFD4100L	ELHFD3100L	ELHFD4100L	ELFDC3100L	ELFDC4100L
110	ELFD3110L	ELFD4110L	ELHFD3110L	ELHFD4110L	ELFDC3110L	ELFDC4110L
125	ELFD3125L	ELFD4125L	ELHFD3125L	ELHFD4125L	ELFDC3125L	ELFDC4125L
150	ELFD3150L	ELFD4150L	ELHFD3150L	ELHFD4150L	ELFDC3150L	ELFDC4150L

J-Frame Earth Leakage Ground Fault Breakers UL 489 and UL 1053 – Catalog Numbers

Amperes	35 kA at 480 VAC		65 kA at 480 VAC		100 kA at 480 VAC	
	3-Pole	4-Pole	3-Pole	4-Pole	3-Pole	4-Pole
100	ELJD3100	ELJD4100	ELHJD3100	ELHJD4100	ELJDC3100	ELJDC4100
125	ELJD3125	ELJD4125	ELHJD3125	ELHJD4125	ELJDC3125	ELJDC4125
150	ELJD3150	ELJD4150	ELHJD3150	ELHJD4150	ELJDC3150	ELJDC4150
175	ELJD3175	ELJD4175	ELHJD3175	ELHJD4175	ELJDC3175	ELJDC4175
200	ELJD3200	ELJD4200	ELHJD3200	ELHJD4200	ELJDC3200	ELJDC4200
225	ELJD3225	ELJD4225	ELHJD3225	ELHJD4225	ELJDC3225	ELJDC4225
250	ELJD3250	ELJD4250	ELHJD3250	ELHJD4250	ELJDC3250	ELJDC4250

K-Frame Earth Leakage Ground Fault Breakers UL 489 and UL 1053 – Catalog Numbers

Amperes	35 kA at 480 VAC		65 kA at 480 VAC		100 kA at 480 VAC	
	3-Pole	4-Pole	3-Pole	4-Pole	3-Pole	4-Pole
200	ELKD3200	ELKD4200	ELHKD3200	ELHKD4200	ELKDC3200	ELKDC4200
225	ELKD3225	ELKD4225	ELHKD3225	ELHKD4225	ELKDC3225	ELKDC4225
250	ELKD3250	ELKD4250	ELHKD3250	ELHKD4250	ELKDC3250	ELKDC4250
300	ELKD3300	ELKD4300	ELHKD3300	ELHKD4300	ELKDC3300	ELKDC4300
350	ELKD3350	ELKD4350	ELHKD3350	ELHKD4350	ELKDC3350	ELKDC4350
400	ELKD3400	ELKD4400	ELHKD3400	ELHKD4400	ELKDC3400	ELKDC4400

Standard Line and Load Terminals – Included with Breaker

Frame		Wire Type	(Number) Range of Conductors	Terminal Material
F-Frame	35-100A	Cu/Al	(1) #14-1/0	Steel
F-Frame	110-150A	Cu/Al	(1) #4-4/0	Stainless Steel
J-Frame	100-250A	Cu/Al	(1) #4-250 kcmil	Aluminum
K-Frame	200-350A	Cu/Al	(1) 250-500 kcmil	Aluminum
K-Frame	400A	Cu/Al	(2) 3/0-250 kcmil	Aluminum

Optional K-Frame Line and Load Terminals – Order Separately

Wire Type	(Number) Range of Conductors	Terminal Material	Catalog Number
Cu/Al Cu/Al	(2) 250 kcmil (1) 500 kcmil	Aluminum Aluminum	**3TA401K①**
Cu/Al Cu/Al	(2) 250 kcmil (1) 500 kcmil	Aluminum Aluminum	**4TA401K②**
Cu	(1) 3-350 kcmil	Copper	**T300K**
Cu	(1) 3-350 kcmil	Copper	**T300K**
Cu	(1) 250-500 kcmil	Copper	**T350K**
Cu	(1) 250-500 kcmil	Copper	**T350K**
Cu	(1) 3/0-250 kcmil	Copper	**3T400K①**
Cu	(1) 3/0-250 kcmil	Copper	**3T400K②**

F-Frame HMCP with Earth Leakage Ground Fault

Continuous Amperes	Catalog Number 3-Pole
3	ELHMCP003A0C
7	ELHMCP007C0C
15	ELHMCP015E0C
25	ELHMCP025X0C
30	ELHMCP030H1C
50	ELHMCP050K2C
70	ELHMCP070M2C
100	ELHMCP100R3C
150	ELHMCP150T4C
150	ELHMCP150U4C
3	ELHMCP003A0LC
7	ELHMCP007C0LC
15	ELHMCP015E0LC
25	ELHMCP025D0C
30	ELHMCP030H1LC
50	ELHMCP050G2C
70	ELHMCP070J2C
100	ELHMCP100L3C
–	ELHMCP024D0IC
–	ELHMCP050G2IC
–	ELHMCP070J2IC
100	ELHMCP100K3C

HMCPs for Application with Motor Starters Equipped with Electrical Overload Relays

3	ELHMCPS003A0C
7	ELHMCPS007C0C
15	ELHMCPS015E0C
30	ELHMCPS030H1C
50	ELHMCPS050K2C
100	ELHMCPS100R3C
150	ELHMCPS150T4C
150	ELHMCPS140U4C

J-Frame HMCP with Earth Leakage Ground Fault

Continuous Amperes	Catalog Number 3-Pole
250	ELHMCP250A5 ELHMCP250C5 ELHMCP250D5 ELHMCP250F5 ELHMCP250G5 ELHMCP250J5 ELHMCP250K5 ELHMCP250L5 ELHMCP250W5
400	ELHMCP400D5 ELHMCP400F5 ELHMCP400G5 ELHMCP400J5 ELHMCP400K5

① Package of 3 terminals.
② Package of 4 terminals.
③ 15, 20, 25, and 30 ampere available.

Type FCL Current Limit-R Thermal-Magnetic Circuit Breakers

15 to 100 Amperes, 480 Volts Ac
Non-Interchangeable Trip, Line and Load Terminals Included

Type FCL Breaker

Dimensions / Weights

Dimensions, Inches

Number of Poles	Width	Height	Depth
2-3	4.125 (104.78)	8.75 (222.25)	3.375 (85.73)

Approximate Shipping Weight, Lbs. (kg)

2-Pole	9 (4.082)
3-Pole	9 (4.082)

Listed with Underwriters Laboratories, Inc. except as noted.
Type FCL breakers are not defined in Federal Specification W-C-375-b.

Interrupting Capacity Ratings

Circuit Breaker Type	Volts Ac (50/60 Hz)	Interrupting Capacity (Symmetrical Amperes) (kA)
FCL	240 480	200 150

On all 3-phase Delta, Grounded B phase applications, refer to Cutler-Hammer.

Maximum Continuous Ampere Rating @ 40°C	2-Pole①	3-Pole
	Catalog Number	
15	FCL2015L	FCL3015L
20	FCL2020L	FCL3020L
25	FCL2025L	FCL3025L
30	FCL2030L	FCL3030L
35	FCL2035L	FCL3035L
40	FCL2040L	FCL3040L
45	FCL2045L	FCL3045L
50	FCL2050L	FCL3050L
60	FCL2060L	FCL3060L
70	FCL2070L	FCL3070L
80	FCL2080L	FCL3080L
90	FCL2090L	FCL3090L
100	FCL2100L	FCL3100L

Line and Load Terminals

Breakers listed include line and load terminals. Terminals are Underwriters Laboratories, Inc. listed for wire sizes and types listed below. When used with aluminum cable, use joint compound. To order optional aluminum terminals, add suffix "Z" to breaker catalog number listed.

Maximum Breaker Amperes	Wire Type	AWG Wire Range
Standard Pressure Terminals		
100	Al/Cu	#14-1/0
Optional Al/Cu Pressure Terminals		
50	Al/Cu	#14-#4
100	Al/Cu	#4-4/0

① 2-pole breakers are supplied in 3-pole frames with current carrying parts omitted from the center pole.

Type LCL Current Limit-R Electronic Circuit Breakers

125 to 400 Amperes, 600 Volts Ac with Solid State Trip Units

Type LCL Breaker

Dimensions / Weights

Dimensions, Inches

Number of Poles	Width	Height	Depth
2-3	16 (406.40)	8.25 (209.56)	4.0625 (103.19)

Approximate Shipping Weight, Lbs. (kg)

Standard	
2-Pole	32 (14.515)
3-Pole	32 (14.515)
With Ground Fault	
3-Pole	36 (16.329)

Listed with Underwriters Laboratories, Inc. except as noted.
Type LCL breakers are not defined in Federal Specification W-C-375-b.

Interrupting Capacity Ratings

Circuit Breaker Type	Volts Ac (50/60 Hz)	Interrupting Capacity (Symmetrical Amperes) (kA)
LCL	240 480 600	200 200 100

On all 3-phase Delta, Grounded B phase applications, refer to Cutler-Hammer.

Standard Breakers 600 Volts Ac, 50/60 Hz

Complete breaker requires frame, rating plug and terminals

Frame Only			
Poles①	Standard (Long Delay, Magnetic Trip and Current Limiting)	Magnetic Only② and Current Limiting	Long Delay, Magnetic Trip and Adjustable Short Delay Time (.08-.28 seconds), and Current Limiting
	Catalog Number		
Types LCL and LCLA 250 Ampere Frame (125-250 Amperes)			
2 3	LCL2250F LCL3250F	LCL2250FM LCL3250FM	LCLA2250F LCLA3250F
Type LCL and LCLA 400 Ampere Frame (200-400 Amperes)			
2 3	LCL2400F LCL3400F	LCL2400FM LCL3400FM	LCLA2400F LCLA3400F

Instruction Leaflet/FRED Number 15257

Breakers with Built-in Ground Fault Protection

Complete breaker requires frame, rating plug and terminals – extra current transformer included for neutral.

Frame Only		
Poles①	Standard (Long Delay, Magnetic Trip, Current Limiting, and Ground Fault Trip)	Long Delay, Magnetic Trip and Adjustable Short Delay Time (.06-.22 seconds), and Ground Fault Trip and Current Limiting
	Catalog Number	
Types LCLG and LCLGA 250 Ampere Frame (125-250 Amperes)		
3	LCLG3250F	LCLGA3250F
Types LCLG and LCLGA 400 Ampere Frame (200-400 Amperes)		
3	LCLG3400F	LCLGA3400F

Instruction Leaflet/FRED Number 15495

Terminals③ (Order Separately)

Two terminals are required per pole. Terminals are Underwriters Laboratories, Inc. listed for wire type and range listed below. When used with aluminum cable, use joint compound.

Maximum Breaker Amperes	Wire Range, Type, Number of Cables	Terminal Catalog Number
Standard Copper Pressure Terminals		
225 400	1#6-350 kcmil Cu 1#4-250 kcmil Cu, plus 1 3/0-600 kcmil Cu	T225LA T401LA
Optional Al/Cu Pressure Terminals		
225 400	1#6-350 kcmil Cu, or 1#4-350 kcmil Al 1#4-250 kcmil Al/Cu, plus 1 3/0-600 kcmil Al/Cu	TA225LA1 TA400LA1

① 2-pole breakers are supplied in 3-pole frames with current carrying parts omitted from the center pole.
② UL listed recognized component.
③ Terminals shipped separately from breaker.

Rating Plug Selection Data

Rating plugs listed below are for both standard breakers and breakers with built-in ground fault protection.

Rating Plugs Only (For 2- or 3-Pole Frames)

Continuous Ampere Rating	Magnetic Trip Setting, Amperes		Fixed Rating Plugs	Adjustable Rating Plugs④
	Low	High	Catalog Number	
Types LCL and LCLA 250 Ampere Frames				
125	375	1125	2LCL125	–
150	450	1350	2LCL150	–
175	525	1575	2LCL175	A2LCL175⑤
200	600	1800	2LCL200	A2LCL200
225	675	2025	2LCL225	A2LCL225
250	750	2250	2LCL250	A2LCL250⑥
Types LCL and LCLA 400 Ampere Frames				
200	400	1600	4LCL200	–
225	450	1800	4LCL225	–
250	500	2000	4LCL250	–
275	550	2200	4LCL275	–
300	600	2400	4LCL300	A4LCL300⑤
350	700	2800	4LCL350	A4LCL350
400	800	3200	4LCL400	A4LCL400⑥

④ Adjustable 70 to 100% except as noted.
⑤ Adjustable 75 to 100%.
⑥ Adjustable 50 to 100%.

Type FB Tri-Pac Thermal-Magnetic Circuit Breakers

15 to 100 Amperes, 600 Volts Ac, 250 Volts Dc, Replaceable Current Limiters

Type Tri-Pac FB Breaker

Dimensions / Weights

Dimensions, Inches

Number of Poles	Width	Height	Depth
2-3	4.125 (104.78)	8.75 (222.25)	3.5 (88.90)

Approximate Shipping Weight, Lbs. (kg)

Breaker	Complete Breaker	
	2-Pole	3-Pole
Tri-Pac FB	10.5	11.5

Listed with Underwriters Laboratories, Inc. except as noted.
Tri-Pac FB breakers meet the requirements for Class 16a, 16b, 17a and 26a circuit breakers as defined in Federal Specification W-C-375b.

Interrupting Capacity Ratings

Underwriters Laboratories, Inc. Listed

600 Volts Ac Maximum: 200,000 Amperes Symmetrical

Based on NEMA Test Procedures

250 Volts Dc Maximum: 100,000 Amperes.

On all 3-phase Delta, Ground B phase applications, refer to Cutler-Hammer.

① 2-pole breakers are supplied in 3-pole frames with current carrying parts omitted from the center pole.

Maximum Continuous Ampere Rating @ 40°C	2-Pole①	3-Pole
	Catalog Number (Current Limiters Included)	
15	FB2015PL	FB3015PL
20	FB2020PL	FB3020PL
30	FB2030PL	FB3030PL
40	FB2040PL	FB3040PL
50	FB2050PL	FB3050PL
60	FB2060PL	FB3060PL
70	FB2070PL	FB3070PL
90	FB2090PL	FB3090PL
100	FB2100PL	FB3100PL

Line and Load Terminals

Breakers listed include line and load terminals. Terminals are Underwriters Laboratories, Inc. listed for wire sizes and types listed below. When used with aluminum cable, use joint compound. To order optional aluminum terminals, add suffix "Z" to breaker catalog number listed.

Maximum Breaker Amperes	Wire Type	AWG Wire Range
Standard Pressure Terminals		
100	Al/Cu	#14-1/0
Optional Al/Cu Pressure Terminals		
50	Al/Cu	#14-#4
100	Al/Cu	#4-4/0

Replacement Current Limiters and Housing Assembly

Current Limiters: One required per pole.

Application	Catalog Number
Supplied as standard in Type FB Tri-Pac breakers rated 15-100 amperes. Replaces 200FBP03 formerly supplied on 15-40 ampere ratings, and 500FBP07 formerly supplied on 50-100 ampere ratings.	**100FBP06**

Refer to CAT.71.01.T.E for complete application information.

Current Limiter Housing Assembly Complete with Current Limiter

Ampere Rating	Poles	Style Number
15-100	2	**176C593G09**
15-100	3	**176C593G10**

Type LA Tri-Pac Thermal-Magnetic Circuit Breakers

70 to 400 Amperes, 600 Volts Ac, 250 Volts Dc, 2-, 3-Pole, Interchangeable Trip, Replaceable Current Limiters

Type Tri-Pac LA Breaker

Dimensions / Weights

Dimensions, Inches

Number of Poles	Width	Height	Depth
2-3	8.25 (209.56)	16 (406.40)	4.75 (113.54)

Approximate Shipping Weight, Lbs. (kg)

Breaker	Complete Breaker		Frame Only		Trip Unit	
	2-Pole	3-Pole	2-Pole	3-Pole	2-Pole	3-Pole
Tri-Pac LA	29.75	34	23.5	25	2.25	3

Listed with Underwriters Laboratories, Inc. except as noted.
Tri-Pac LA breakers meet the requirements for Class 16a, 16b, 17a and 26a circuit breakers as defined in Federal Specification W-C-375b.

Interrupting Capacity Ratings

Underwriters Laboratories, Inc. Listed

600 Volts Ac Maximum: 200,000 Amperes Symmetrical

Based on NEMA Test Procedures

250 Volts Dc Maximum: 100,000 Amperes.

On all 3-phase Delta, Ground B phase applications, refer to Cutler-Hammer.

Continuous Ampere Rating @40°C	Magnetic Trip Setting Amperes④		Complete Breaker	Shipped as Frame, Trip Units, Limiters and Terminals⑤		
			Includes Pressure Type Copper Terminals⑤	Frame Only	Trip Unit Only	Current Limiter 1 Required per Pole
	Low	High	Catalog Number			
2 Poles, 600 Volts Ac, 250 Volts Dc⑥						
70	350	700	LA2070PR	LA2400PRF	LA2070PT	200LAP08
90	450	900	LA2090PR	LA2400PRF	LA2090PT	200LAP08
100	500	1000	LA2100PR	LA2400PRF	LA2100PT	200LAP08
125	625	1250	LA2125PR	LA2400PRF	LA2125PT	200LAP08
150	750	1500	LA2150PR	LA2400PRF	LA2150PT	200LAP08
175	875	1750	LA2175PR	LA2400PRF	LA2175PT	200LAP08
200	1000	2000	LA2200PR	LA2400PRF	LA2200PT	200LAP08
225	1125	2250	LA2225PR	LA2400PRF	LA2225PT	400LAP10
250	1250	2500	LA2250PR	LA2400PRF	LA2250PT	400LAP10
300	1500	3000	LA2300PR	LA2400PRF	LA2300PT	400LAP10
350	1750	3500	LA2350PR	LA2400PRF	LA2350PT	400LAP10
400	2000	4000	LA2400PR	LA2400PRF	LA2400PT	400LAP10
3 Poles, 600 Volts Ac, 250 Volts Dc						
70	350	700	LA3070PR	LA3400PRF	LA3070PT	200LAP08
90	450	900	LA3090PR	LA3400PRF	LA3090PT	200LAP08
100	500	1000	LA3100PR	LA3400PRF	LA3100PT	200LAP08
125	625	1250	LA3125PR	LA3400PRF	LA3125PT	200LAP08
150	750	1500	LA3150PR	LA3400PRF	LA3150PT	200LAP08
175	875	1750	LA3175PR	LA3400PRF	LA3175PT	200LAP08
200	1000	2000	LA3200PR	LA3400PRF	LA3200PT	200LAP08
225	1125	2250	LA3225PR	LA3400PRF	LA3225PT	400LAP10
250	1250	2500	LA3250PR	LA3400PRF	LA3250PT	400LAP10
300	1500	3000	LA3300PR	LA3400PRF	LA3300PT	400LAP10
350	1750	3500	LA3350PR	LA3400PRF	LA3350PT	400LAP10
400	2000	4000	LA3400PR	LA3400PRF	LA3400PT	400LAP10

Instruction Leaflet/FRED Number 14551 for Trip Unit and Fuse

Current Limiters

Included with breaker, one required per pole.

Application	Catalog Number
Supplied as standard on ratings through 200 amperes.	200LAP08
Supplied as standard on 225 through 400 ampere ratings, optional on lower ratings when a higher "cross-over point" is desired. (Above two limiters replace 800LAP12 formerly supplied as standard on all ratings, 600LAP09 optional on all ratings through 300 amperes, 300LAP05 optional on ratings through 150 amperes, and special rating limiter 1000LAP14.)	400LAP10
Special rating where a higher "cross-over point" is desired on 200 ampere and higher ratings (Replaces limiter 1500LAP20)	500LAP15 ②③

① New limiters suitable for replacement in existing breakers by using plug-in conductor from old limiter (instructions included with limiter). Instruction Leaflet/FRED Number 14824
② Not listed with Underwriters Laboratories, Inc.
③ Protection based on 100,000 ampere maximum fault, 480 volts maximum.
④ Set on high side, adjustable to lower limits.

Terminals⑤

Two terminals are required per pole. Terminals are Underwriters Laboratories, Inc. listed for wire size and type listed below. When used with aluminum conductors, use joint compound. To order optional aluminum terminals, add suffix "Z" to complete breaker catalog number.

Maximum Breaker Amperes	Wire Range, Type, Number of Cables	Terminal Catalog Number
Standard Copper Pressure Terminals		
225	1 #6-350 kcmil Cu	T225LA
225⑦	1 #6-250 kcmil Cu	T225LBF
400	1 #4-250 kcmil Cu, plus 1 3/0-600 kcmil Cu	T401LA
Optional Al/Cu Pressure Terminals		
225	1 #6-350 kcmil Cu, or 1 #4-350 kcmil Cu/Al	TA225LA1
400	1 #4-250 kcmil Al/Cu, plus 1 3/0-600 kcmil Al/Cu	TA400LA1

Instruction Leaflet/FRED Number 13732

⑤ Terminals shipped separately from breakers.
⑥ 2-pole breakers or trips are supplied in 3-pole frames with current carrying parts omitted from the center pole.
⑦ Optional terminal.

Type NB Tri-Pac Thermal-Magnetic Circuit Breakers

300 to 800 Amperes, 600 Volts Ac, 250 Volts Dc①, 2-, 3-Pole, Interchangeable Trip, Replaceable Current Limiters

Type Tri-Pac NB Breaker

Continuous Ampere Rating @40°C	Magnetic Trip Setting Amperes④		Complete Breaker	Shipped as Frame, Trip Units, Limiters and Terminals		
			Includes Pressure Type Copper Terminals⑤	Frame Only	Trip Unit Only	Current Limiter 1 Required per Pole
	Low	High	Catalog Number			
2 Poles, 600 Volts Ac, 250 Volts Dc①③						
300	1500	3000	**NB2300P**	**NB2800PF**	**NB2300PT**	**500NBP12**
350	1750	3500	**NB2350P**	**NB2800PF**	**NB2350PT**	**500NBP12**
400④	2000	4000	**NB2400P**	**NB2800PF**	**NB2400PT**	**500NBP12**
500④	2500	5000	**NB2500P**	**NB2800PF**	**NB2500PT**	**500NBP12**
600④	3000	6000	**NB2600P**	**NB2800PF**	**NB2600PT**	**800NBP20**
700④	3000	6000	**NB2700P**	**NB2800PF**	**NB2700PT**	**800NBP20**
800④	3000	6000	**NB2800P**	**NB2800PF**	**NB2800PT**	**800NBP20**
3 Poles, 600 Volts Ac Only						
300	1500	3000	**NB3300P**	**NB3800PF**	**NB3300PT**	**500NBP12**
350	1750	3500	**NB3350P**	**NB3800PF**	**NB3350PT**	**500NBP12**
400④	2000	4000	**NB3400P**	**NB3800PF**	**NB3400PT**	**500NBP12**
500④	2500	5000	**NB3500P**	**NB3800PF**	**NB3500PT**	**500NBP12**
600④	3000	6000	**NB3600P**	**NB3800PF**	**NB3600PT**	**800NBP20**
700④	3000	6000	**NB3700P**	**NB3800PF**	**NB3700PT**	**800NBP20**
800④	3000	6000	**NB3800P**	**NB3800PF**	**NB3800PT**	**800NBP20**

Instruction Leaflet/FRED Number 13771 for Trip Unit and Fuse

Dimensions / Weights

Dimensions, Inches

Number of Poles	Width	Height	Depth
2-3	8.25 (209.56)	22 (558.80)	5.5 (139.70)

Approximate Shipping Weight, Lbs. (kg)

Breaker	Complete Breaker		Frame Only		Trip Unit	
	2-Pole	3-Pole	2-Pole	3-Pole	2-Pole	3-Pole
Tri-Pac NB	62	75	58	65	3.5	4

Listed with Underwriters Laboratories, Inc. except as noted.
Tri-Pac NB breakers meet the requirements for Class 16b, 17a and 26a circuit breakers as defined in Federal Specification W-C-375b.

Interrupting Capacity Ratings

Underwriters Laboratories, Inc. Listed

600 Volts Ac Maximum: 200,000 Amperes Symmetrical

Based on NEMA Test Procedures

250 Volts Dc Maximum①: 100,000 Amperes.

On all 3-phase Delta, Grounded B phase applications, refer to Cutler-Hammer.

Current Limiters

Included with breaker, one required per pole.

Application	Catalog Number
Supplied as standard on ratings through 500 amperes.	**500NBP12**
Supplied as standard on 600 through 800 ampere ratings, optional on lower ratings when a higher "cross-over point" is desired. Above two limiters replace 1000NBP14 formerly supplied on ratings up to 600 amperes, 1500NBP20 supplied on 700 amperes, and 2500NBP25 supplied on 800 amperes.	**800NBP20**

Terminals②

Two terminals are required per pole. Terminals are Underwriters Laboratories, Inc. listed for wire size and type listed below. When used with aluminum conductors, use joint compound. To order optional aluminum terminals, add suffix "Z" to complete breaker catalog number.

Maximum Ampere Rating	Wire Range, Type, Number of Cables	Terminal Catalog Number
Standard Copper Pressure Terminals		
350	1 #1-600 kcmil Cu	**T350NB**
700	2 2/0-500 kcmil Cu	**T700NB1**
800	3 3/0-500 kcmil Cu	**T1000NB1**
Optional Al/Cu Pressure Terminals		
700	2 #1-500 kcmil Al/Cu	**TA700NB1**
800	3 3/0-400 kcmil Al/Cu	**TA1000NB1**
800	3 500-750 kcmil Al/Cu	**TA1201NB1**

① Dc rating applies to 350 amperes maximum thermal or to magnetic only breakers.
② Shipped separately from breaker
③ 2-pole breakers or trips are supplied in 3-pole frames with current carrying parts omitted from the center pole.
④ 60 Hz Ac only.

Type PB Tri-Pac Thermal-Magnetic Circuit Breakers

600 to 1600 Amperes, 600 Volts Ac, 60 Hertz Ac①, 250 Volts Dc②, 2-, 3- Poles Interchangeable Trip, Replaceable Current Limiters

Type Tri-Pac PB Breaker

Continuous Ampere Rating @40°C	Ac Magnetic Trip Setting (Set on High Side, Adjustable to Lower Limits)		Complete Breaker	Shipped as Frame, Trip Unit Current Limiters and Connectors		
			Includes Rear "T" Connectors⑤	Frame Only	Trip Unit Only④	Current Limiter 1 Required per Pole
	Low	High	Catalog Number			
2 Poles, 600 Volts Ac⑤						
600	1500	5000	PB2600PR	PB21600PRF	PB2600PRT	1000PBPR20
700	1500	5000	PB2700PR	PB21600PRF	PB2700PRT	1000PBPR20
800	1500	5000	PB2800PR	PB21600PRF	PB2800PRT	1000PBPR20
900	1500	5000	PB2900PR	PB21600PRF	PB2900PRT	1000PBPR20
1000	1500	5000	PB21000PR	PB21600PRF	PB21000PRT	1000PBPR20
1200	2000	6000	PB21200PR	PB21600PRF	PB21200PRT	1600PBPR30
1400	2500	7000	PB21400PR	PB21600PRF	PB21400PRT	1600PBPR30
1600	3000	8000	PB21600PR	PB21600PRF	PB21600PRT	1600PBPR30
3 Poles, 600 Volts Ac Only						
600	1500	5000	PB3600PR	PB31600PRF	PB3600PRT	1000PBPR20
700	1500	5000	PB3700PR	PB31600PRF	PB3700PRT	1000PBPR20
800	1500	5000	PB3800PR	PB31600PRF	PB3800PRT	1000PBPR20
900	1500	5000	PB3900PR	PB31600PRF	PB3900PRT	1000PBPR20
1000	1500	5000	PB31000PR	PB31600PRF	PB31000PRT	1000PBPR20
1200	2000	6000	PB31200PR	PB31600PRF	PB31200PRT	1600PBPR30
1400	2500	7000	PB31400PR	PB31600PRF	PB31400PRT	1600PBPR30
1600	3000	8000	PB31600PR	PB31600PRF	PB31600PRT	1600PBPR30

Dimensions / Weights

Dimensions, Inches

Number of Poles	Width	Height	Depth
2-3	12.0625 (306.39)	22.125 (561.98)	9.0625 (230.19)

Approximate Shipping Weight, Lbs. (kg)

Breaker	Complete Breaker		Frame Only		Trip Unit	
	2-Pole	3-Pole	2-Pole	3-Pole	2-Pole	3-Pole
Tri-Pac PB	148	179	106	120	18	23

Listed with Underwriters Laboratories, Inc. except as noted.
Tri-Pac PB breakers meet the requirements for Class 17a and 26a circuit breakers as defined in Federal Specification W-C-375b.

Interrupting Capacity Ratings

Underwriters Laboratories, Inc. Listed

600 Volts Ac Maximum: 200,000 Amperes Symmetrical

Based on NEMA Test Procedures

250 Volts Dc②: 100,000 Amperes.

On all 3-phase Delta, Grounded B phase applications, refer to Cutler-Hammer.

Current Limiters

Included with breaker, one required per pole.

Application	Catalog Number
Supplied as standard on ratings through 1000 amperes. (Replaces limiter 1500PBPR30 formerly supplied on 600 and 700 ampere ratings, and 3000 PBPR27 supplied on 800-1000 ampere ratings.	1000PBPR20
Supplied as standard on 1200 through 1600 ampere ratings. Optional on lower ratings where a higher "cross-over point" is desired. (Replaces limiter 4000PBR30 formerly supplied on 1200 through 1400 ampere ratings, and 5000PBPR42 supplied on 1600 ampere ratings.	1600PBPR30

Bus Bar Connectors⑥

"T" Connector for Cu/Al Bus

Two required per pole. For rear bus connection. Accepts up to four bus bolts. May be rotated 90'

Catalog Number
BA2000B

Cable Connector

(Optional)

For "T" connector. Accepts four 600 kcmil copper cables.

Style Number
505C706G04

Special Breakers⑥

Magnetic Only Type Tri-Pacs:
Available on request.

① Higher frequency calibration not available. Minimum of 50 Hz calibration available on special order.
② 250 volts Dc rating applies only to magnetic only breakers.
③ Shipped separately from breaker.
④ Magnetic only trip units are available. Order by description.
⑤ 2-pole breakers are supplied in 3-pole frames with current carrying parts omitted from center pole.
⑥ Not listed with Underwriters Laboratories, Inc.

Alarm Switch

For light or alarm indication when breaker trips. Does not function with manual operation. Automatically resets when breaker is relatched. Standard leads extend 18 inches outside of breaker. Longer leads may be specified. Not field mountable.

Breaker Frame	Normal Pole Meeting	Contact Operation (Specific Type Desired)
FCL	Center	Make or Break
LA Tri-Pac	Left	Make or Break
NB Tri-Pac	Left	Make or Break
PB Tri-Pac	Left	Make or Break
LCL	Left①	Make or Break

Alarm Switch Contact Rating (Non Inductive) LA Tri-Pac: 10 amperes, 120 volt Ac; 5A, 240 volt Ac.

Auxiliary Switch②

For auxiliary control circuits. Miniature switches mount within breaker. Commonly used for remote indication of open or closed breaker and electrically interlocking component control circuits. "A" contacts are closed when breaker is closed. "B" contacts are open when breaker is closed. Standard leads extend 18 inches outside of breaker. Longer leads may be specified.

Auxiliary Switch Attachment Kits for Field Mounting③④

Breaker Type	For Right-Hand Mounting		For Left-Hand Mounting		Maxmum Ac Voltage Rating⑤	Maximum Non-Inductive Amperes
	1A-1B	2A-2B	1A-1B	2A-2B		
	Style Number					
FCL	**1369D79G03**	–	**1369D79G03**	–	240	5
NB Tri-Pac	**4980D16G05**	**4980D16G06**	**4980D16G12**	**4980D16G13**	480	10
PB Tri-Pac	**2602D32G14**	**2602D32G15**	**2602D32G11**	**2602D32G12**	480	10
LCL	–	–	**1372D49G03**	**1372D49G06**	480	6 (10@240)

Instruction Leaflet/FRED Number 14535 NB Tri-Pac; 14534 PB Tri-Pac; 15279 LCL

Factory Mounted Auxiliary Switches②

All of the above auxiliary switches can be specified for factory mounting at the same price as listed for the kit. These attachments have the leads out the side of the breaker and are UL listed when factory mounted unless other non UL listed modifications are used (except as noted).

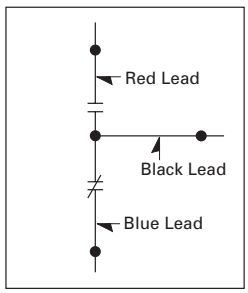

Factory mounted switches only can be supplied for the following breakers: FB Tri-Pac⑥, LA Tri-Pac. Order by description.

① When alarm switch is used in conjunction with auxiliary switch, the auxiliary switch is rated 250 volts max., 5 amperes maximum.
② Left-hand mounting is standard unless otherwise specified.
③ All switches are multiples of 1A-1B with a common electrical connection (See diagram above).
④ Field mounting voids UL listing of breaker except on NB Tri-Pac and PB Tri-Pac breakers.
⑤ For Dc applications refer to factory.
⑥ Right-hand mounting only.

Shunt Trip

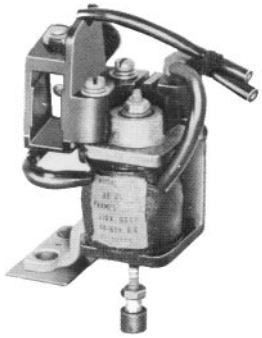

For tripping breaker from a remote point. A solenoid device mounts within breaker case. Breaker trips when coil is energized.

Shunt trips should not be used as circuit interlocks using maintained contact pilot devices.

A cutoff switch breaks the circuit to the momentary rated coil when breaker opens. Available for control voltages up to 250 volts Dc or 600 volts Ac. Voltage and frequency must be specified. Standard leads extend 18 inches outside of breaker. Longer leads may be specified.

Shunt Trip for Field Mounting①②③

Voltage/Hz	Breaker Type					
	Right-Hand Mounting			Left-Hand Mounting		
	FCL	NB Tri-Pac	PB Tri-Pac	FCL	NB Tri-Pac	PB Tri-Pac
	Style Number					
600/50-60 Hz	1369D80G15	2606D58G15	2606D58G15	1369D80G01	2606D58G01	2606D58G01
480/50-60 Hz	1369D80G16	2606D58G16	2606D58G16	1369D80G02	2606D58G02	2606D58G02
240/50-60 Hz	1369D80G17	2606D58G17	2606D58G17	1369D80G03	2606D58G03	2606D58G03
208/50-60 Hz	1369D80G18	2606D58G18	2606D58G18	1369D80G04	2606D58G04	2606D58G04
120/50-60 Hz	1369D80G19	2606D58G19	2606D58G19	1369D80G05	2606D58G05	2606D58G05
60/50-60 Hz	1369D80G20	2606D58G20	2606D58G20	1369D80G06	2606D58G06	2606D58G06
48/50-60 Hz	1369D80G21	2606D58G21	2606D58G21	1369D80G07	2606D58G07	2606D58G07
24/50-60 Hz	1369D80G22	2606D58G22	2606D58G22	1369D80G08	2606D58G08	2606D58G08
250 Dc	1369D80G23	2606D58G23	2606D58G23	1369D80G09	2606D58G09	2606D58G09
125 Dc	1369D80G24	2606D58G24	2606D58G24	1369D80G10	2606D58G10	2606D58G10
60 Dc	1369D80G25	2606D58G25	2606D58G25	1369D80G11	2606D58G11	2606D58G11
48 Dc	1369D80G26	2606D58G26	2606D58G26	1369D80G12	2606D58G12	2606D58G12
24 Dc	1369D80G27	2606D58G27	2606D58G27	1369D80G13	2606D58G13	2606D58G13
12 Dc	1369D80G28	2606D58G28	2606D58G28	1369D80G14	2606D58G14	2606D58G14
Instruction Leaflet/FRED Numbers	15194	14919	14940	15194	14919	14940

Factory mounted shunt trips only can be supplied for FB Tri-Pac④⑤ and LA Tri-Pac breakers. Order by description.

Left-Hand Mounting Kits for Type LCL Current Limiting Breakers⑥

	Style Number
Provision to trip flux transfer shunt trip from external 32 to 120 volt (Dc to 60 Hz) source.⑦⑧	1372D49G22
Provision to trip flux transfer shunt trip from external 240 to 600 volt (50/60 Hz) source.⑧⑨	1372D49G32

Instruction Leaflet/FRED Number 15279

Shunt Trip Coil Data for Type LCL Current Limiting Breakers

Shunt Trip Voltage Rating	Coil Inrush	
	Amperes	Volt-Amperes
120 Ac	.15	18

① 120 volt Ac ratings suitable for 55% pickup for ground fault applications.
② Not field mountable on non-automatic breakers (MCS).
③ Field mounting voids breakers' UL listing except on NB Tri-Pac and PB Tri-Pac.
④ Right-hand mounting only.
⑤ Not UL listed.
⑥ UL listing pending. Refer to Cutler-Hammer.
⑦ Rated 48 volts minimum for ground fault applications.
⑧ Also available factory mounted for 24 volt Dc. Order by description.
⑨ Not for ground fault.

Standard Undervoltage Release①

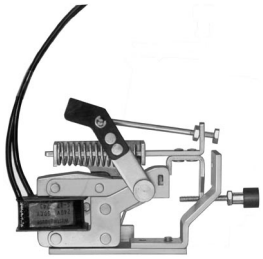

For undervoltage protection. A solenoid device mounts within breaker case. Coil must be energized before closing breaker. Trips breaker when voltage drops below 40 to 60% of coil rating. Picks up and seals in at 80% of coil rating. For line voltages up to 250 volts Dc or 600 volts Ac. Externally mounted resistors are supplied for certain ratings. Standard leads extend 18 inches outside of breaker. Longer leads may be specified.

Note: U.V.R. attachments are not designed for, and should not be used as, circuit interlocks. For further information, refer to Cutler-Hammer.

Factory Mounted Undervoltage Releases②

NB Tri-Pac and PB Tri-Pac undervoltage releases can be specified for factory mounting at the same price as the kit. These attachments have the leads out the side and are UL listed when factory mounted unless other non-UL listed modifications are used.

Factory mounted undervoltage releases only can be supplied for the following breakers: FB Tri-Pac③, LA Tri-Pac and FCL; LCL 120 Volts Ac only.④ Order by description.

Undervoltage Release Attachment Kits for Field Mounting⑤⑥

Attachment Voltage, Hz	Breaker Type			
	For Right-Hand Mounting		For Left-Hand Mounting	
	NB Tri-Pac	PB Tri-Pac	NB Tri-Pac	PB Tri-Pac
	Style Number			
24 60	–	–	–	–
48 60	–	5674D29G16	–	5674D29G08
120 60	373D632G01	5674D29G09	373D632G05	5674D29G01
208 60	373D632G19	5674D29G10	373D632G20	5674D29G02
240 60	373D632G02	5674D29G11	373D632G06	5674D29G03
480 60	373D632G03	5674D29G13	373D632G07	5674D29G05
600 60	373D632G04	5674D29G14	373D632G08	5674D29G06
12 Dc	372D032G01	4976D85G01	372D032G06	4976D85G11
24 Dc	372D032G02	4976D85G02	372D032G07	4976D85G12
48 Dc	372D032G03	4976D85G03	372D032G08	4976D85G13
60 Dc	–	4976D85G04	–	4976D85G14
125 Dc	372D032G04	4976D85G07	372D032G09	4976D85G17
250 Dc	372D032G05	4976D85G08	372D032G10	4976D85G18
Instruction Leaflet/FRED Number	14961	13231	14961	13231

Undervoltage Release Coil Data

Voltage Rating, Hz	Breaker Type				
	FB Tri-Pac			LCL	
	Coil Amperes	Series Resistance (Ohms)	Total VA	Coil Amperes	Total VA
600 Ac	0.020	25,000	12.0	–	–
480 Ac	0.016	25,000	7.7	–	–
240 Ac	0.021	6,000	5.1	–	–
208 Ac	0.019	6,000	4.0	–	–
120 Ac	0.023	–	2.8	.05	6
60 Ac	0.203	250	12.2	–	–
48 Ac	0.245	150	11.8	–	–
24 Ac	0.250	50	6.0	–	–
250 Ac	0.026	5,000	6.5	–	–
125 Ac	0.026	–	3.3	–	–
60 Ac	0.248	200	14.9	–	–
48 Ac	0.260	150	12.5	–	–
24 Ac	0.141	–	3.4	–	–
12 Ac	0.286	–	3.5	–	–

Voltage Rating, Hz	Breaker Type					
	LA Tri-Pac, PB Tri-Pac			NB Tri-Pac		
	Coil Amperes	External Series Resistance (Ohms)	Total VA	Coil Amperes	External Series Resistance (Ohms)	Total VA
600 Ac	0.029	20,000	17.4	0.016	35,000	9.6
480 Ac	0.014	–	6.8	0.013	30,000	6.3
240 Ac	0.036	–	8.7	0.013	–	3.2
208 Ac	0.036	–	7.5	0.018	–	3.8
120 Ac	0.073	–	8.8	0.023	–	2.8
48 Ac	0.152	–	7.3	–	–	–
250 Dc	0.035	5,000	8.8	0.013	16,500	3.3
125 Dc	0.039	1,500	4.9	0.013	6,500	1.7
60 Dc	0.034	–	2.1	–	–	–
48 Dc	0.040	–	2.0	0.012	600	0.6
24 Dc	0.069	–	1.7	0.023	–	0.6
12 Dc	0.136	–	1.7	0.048	–	0.6

① Not UL listed.
② Right-hand mounting considered standard unless specified otherwise.
③ Right-hand mounting only.
④ UL listing pending.
⑤ Not field mountable on nonautomatic breakers (Molded case switches).
⑥ Field mounting voids UL listing of breaker except on NB Tri-Pac and PB Tri-Pac.

Rear Connected Studs①

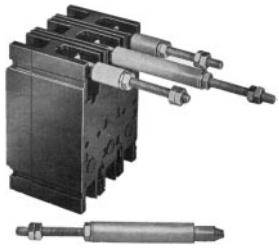

For complete stud assembly, order a stud and appropriate tube based on thickness of customer's mounting panel. A short stud must be assembled adjacent to a long stud to maintain clearances required by Underwriters Laboratories, Inc.② Two studs are required per pole.

Mounting Panel Thickness, Inches	Stud		Tube③	
	Length	Style Number	Length	Style Number
FCL and FB Tri-Pac Breakers				
1	Short	**451D874G01**	1 1/16	**32B9446H20**
	Long	**451D874G02**	3 7/16	**32B9446H24**
11/16 - 15/16	Short	**451D874G01**	1 3/8	**32B9446H21**
	Long	**451D874G02**	3 3/4	**32B9446H25**
3/8 - 5/8	Short	**451D874G01**	1 11/16	**32B9446H22**
	Long	**451D874G02**	4 1/16	**32B9446H26**
1/4 - 5/16	Short	**451D874G01**	2	**32B9446H23**
	Long	**451D874G02**	4 3/8	**32B9446H27**

Stud Ampere Rating	Diameter, Inches and Thread	Extension Back of Breaker, Inches	Stud Style Number
LCL, LA Tri-Pac Breakers			
400④	3/4 -16	5 15/32	**05B7383G15**
400④	3/4 -16	7 31/32	**05B7383G16**
400④	3/4 -16	10 15/32	**05B7383G17**
NB Tri-Pac Breakers			
450	1 1/8 -12	5 1/2	**623B222G01**
450	1 1/8 -12	8	**623B222G02**
450	1 1/8 -12	10 1/2	**623B222G03**
800	1 1/4 -12	5 1/2	**623B375G04**
800	1 1/4 -12	10 1/2	**623B375G03**

Panelboard Connecting Staps①

For connecting line end of breakers to panelboard bus.

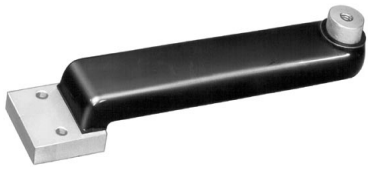

Ampere Rating	Connector Type	Style Number
Power Panelboards (Convertible)		
Tri-Pac FB and FCL Breakers Bus Spacing 3½-inch		
50	Center	**1253C72G01**
50	Outside	**1253C72G02**
100	Center	**1253C73G03**
100	Outside	**1253C73G04**
150	Center	**1253C73G01**
150	Outside	**1253C73G02**
3-Pole Mounting Bracket		**624B600H01**
2-Pole Mounting Bracket		**624B600H02**
LCL Breakers Bus Spacing 3½-inch		
400	Short	**1275C85G01**
400	Medium	**1275C85G02**
400	Long	**1275C85G03**
Mtg. Bracket Kit (1 Req'd)		**751B044G01**

Plug-in Adapter Kits

For rear connected applications such as switchboards. Facilitates ease of installation and front removal of breaker. Includes conductor for mounting on breaker, plug-in mounting blocks with matching conductor, rear studs and mounting hardware. Order two mounting blocks style number when line and load are required; order one mounting block style number when either line or load is required.

Description	Style Number
FB Tri-Pac and FCL Breakers⑤	
1 Mounting Block, Line or Load	
2-Pole, 100 Ampere	**507C036G05**
2-Pole, 150 Ampere	**507C036G06**
3-Pole, 100 Ampere	**507C036G03**
3-Pole, 150 Ampere	**507C036G04**
Instruction Leaflet/FRED Number 13782	
LCL Breakers	
2 Mounting Blocks, Line and Load	
2-Pole	**313C644G25**
3-Pole	**313C644G26**
1 Mounting Block, Line and Load	
2-Pole	**450D010G15**
3-Pole	**450D010G16**
Instruction Leaflet/FRED Number 15329	
NB Tri-Pac Breakers①	
1 Mounting Block, Line or Load	
NB Tri-Pac, 2 Poles	**2614D53G03**
NB Tri-Pac, 3 Poles	**2614D53G04**
Instruction Leaflet/FRED Number 15073	
Tri-Pac LA Breakers①	
2 Mounting Blocks, Line and Load	
2-Pole	**313C644G41**
3-Pole	**313C644G42**
1 Mounting Block, Line Only	
2-Pole	**450D010G17**
3-Pole	**450D010G19**
1 Mounting Block, Load Only	
2-Pole	**450D010G18**
3-Pole	**450D010G20**

① Not Underwriters Laboratories, Inc. listed.
② 400 ampere LA studs of the same length have sufficient clearance; however, customer connections may make it necessary to use a short stud adjacent to a long stud.
③ Included at no charge when ordered with stud.
④ 150, 250, 300 and 400 ampere frames only.
⑤ These plug-in adapter kits are UL listed as recognized components.

Mounting Block for NB Tri-Pac Breakers①

Ampere Rating	Number of Poles	Style Number
NB Tri-Pac		
800	2	**4990D16G04**
800	3	**4990D16G03**

Extended Line Terminal Shields①

For shielding line side terminal connections. One shield required per breaker. Order separately when needed. Sold only in lots of 10, including hardware.

Breaker Frame	Style Number
FB Tri-Pac, FCL	**625B229G01**
LA Tri-Pac	**314C420G05**
NB Tri-Pac	**208B996G02**

Base Mounting Hardware

Order separately when needed.

Breaker Frame	Style Number
FB Tri-Pac, FCL	**21C6782G18**
LA Tri-Pac	**1614613**
NB Tri-Pac	**1091716**
PB Tri-Pac	**624375G22**

Moisture-Fungus-Corrosion Treatment②

Treatment can be provided to meet customer's specific atmospheric conditions. Moisture-fungus treating material used meets JAN-T-152; treatment meets MIL-V-173a. Requests and orders should specify government specifications or conditions to be met.

Handle Locks①

Non-Padlockable

For prevention of unintentional operation of breaker. Fits over breaker handle and may be removed.

Padlockable

For prevention of unauthorized operation of breaker. Is non-removable once installed on breaker. Meets Underwriters Laboratories, Inc. and California Code requirements.

Note: All breakers are trip free and will trip with handle locks attached. Cannot be used when handle extension is used.

Breaker Frame	Style Number
Non-Padlockable	
FB Tri-Pac	**29B2721H01**
LA Tri-Pac	**1720101**
NB Tri-Pac	**1720101**
Padlockable	
FB Tri-Pac	**765A754G01**
LA Tri-Pac	**373B591G02**

Handle Extension

Breaker Frame	Style Number
LA Tri-Pac	**372B399G01**
NB Tri-Pac	**1251C65G01**
PB Tri-Pac②	**315C882G01**

Kirk Key Interlock⑤

Availability: FB, LA, NB, PB Tri-Pacs.

Permits interlocking of two breakers or one breaker with other devices. Before breaker can be closed, key must be inserted and turned in breaker interlock. Breaker must be opened before key can be removed. It can then be inserted in interlock or other devices to permit their closure. Requests and orders should completely outline interlocking scheme, ultimate user and his address.

Mechanical Interlocks②

For mechanically interlocking a pair of breakers so that only one may be closed at one time, but both may be open simultaneously.

Walking Beam Type②③④

Mounts on panel (not included) at rear of breaker. Standard breaker spacing: LA Tri-Pac, NB Tri-Pac: 8-1/2 inches center to center; FB Tri-Pac: 4-3/8 inches center to center; PB Tri-Pac: 12-1/4 inches center to center. Order as a set of two special factory drilled breakers and one walking beam interlock. Specify breaker type, panel thickness and center-to-center dimension of breakers.

Sliding Bar Type (Field Mountable)②⑤

Mounts on panel (not included) fitting over front of breakers. Standard breaker spacing: LA Tri-Pac, NB Tri-Pac: 8-1/2 inches; FB Tri-Pac: 4-3/16 inches center to center.

① Not Underwriters Laboratories, Inc. listed. Insulated base with front removeable bolted connection.
② Included with frame
③ Not UL listed.
④ Not available on drawout breakers.
⑤ Not available for FCL or LCL breakers.
⑥ Not available on motor operated breakers.

Motor Operators①

Motor operators provide complete remote control by means of a push-button or similar pilot device②. Positive switching action is accomplished by use of an operating arm engaging the breaker handle. The unit is energized momentarily to actuate the lever arm moving it to either the "ON" or "OFF" position. The control is broken by an internal cutoff switch. Means for emergency manual operation is provided.

Motor operators are available with motors rated 120 volts Ac, 208 volts Ac, and 240 volts Ac.

The 480 volt operators utilize a 120 volt Ac motor in conjunction with a 480/240 to 120 volt dual voltage transformer. (On LA and larger operators, the transformer is supplied for separate mounting by the customer.)

Note: The motor operator is intended only for infrequent operation in line with Underwriters Laboratories, Inc. endurance standard for AB molded case breakers.

For FB Tri-Pac/FCL Breakers

For LA Tri-Pac Breakers

For NB Tri-Pac Breakers

For PB Tri-Pac Breakers

Motor Operator Selection

Type Breaker	Ac Voltage				Dc Voltage	
	120	208	240	480	125	24
	Style Number					
FCL	**656D148G15**	**656D148G10**	**656D148G17**	**656D148G17**	–	–
LCL	**5664D54G83**	**5664D54G86**	**5664D54G84**	**5664D54G85**	**5664D54G77**	**5664D54G88**
FB Tri-Pac	**656D148G11**	**656D148G04**	**656D148G13**	**656D148G13**	–	–
LA Tri-Pac	**2607D97G22**	**2607D97G25**	**2607D97G23**	**2607D97G24**	**2607D97G44**	–
NB Tri-Pac	**5664D54G65**	**5664D54G68**	**5664D54G66**	**5664D54G67**	**5664D54G82**	–
PB Tri-Pac	**5661D52G01**	**5661D52G04**	**5661D52G02**	**5661D52G03**	**5661D52G17**	–

Instruction Leaflet/FRED Number 13148 FCL; 15334 LCL; 13148 FB Tri-Pac; 15533 LA Tri-Pac; 15534 NB Tri-Pac; 14444 PB Tri-Pac

Back Mounting Plates

Type Breaker	120, 208, 240, 480 Volts Ac
	Style Number
FB-P/FCL	**1282C01G01**

Motor Data

Type Breaker	Motor		Inrush Current, Ampere (Peak)			Continuous Current (RMS)			Operating Time, Open or Close
	Type	Hp.	120 Volts	208 Volts	240 Volts	120 Volts	208 Volts	240 Volts	
FB Tri-Pac	Split Phase	1/75	10	4	5	2.3	1.17	1.65	1.5 Seconds
LA Tri-Pac	Reversing	–	8	5	4	–	–	–	12 Cycles
NB Tri-Pac	Reversing	–	11	7	6	–	–	–	12 Cycles
PB Tri-Pac	Reversing	–	20	12	11	–	–	–	10 Cycles

① Ac voltage rated operators are UL listed as recognized components.
② The pilot device must be maintained contact type for FB Tri-Pac, FCL, mechanisms; momentary contact type for all others.

Drawout Frame

These drawout frames are for use with standard 3-pole Cutler-Hammer molded case circuit breakers. They consist of two separate parts; stationary mounting frame and movable carrier frame. Slide rails are drawer-type, and a screw mechanism is used to engage or withdraw the movable carrier frame.

The drawout frames have three positions: connected, test and disconnected. The frames do not include a safety tripping interlock, or secondary contacts. These are optional items and may be ordered at additional cost.

Breakers mounted in the drawout frames can be equipped with standard breaker accessories including shunt trip, undervoltage release, auxiliary switch, alarm switch and motor operator.

Selection Data

Breaker Type①	Stationary Mounting Frame Style Number	Movable Carrier Frame Style Number
NB Tri-Pac	2603D85G09	2608D34G12

Standard Installation

Order one stationary mounting frame and one movable carrier frame.

Order breakers without terminals or rear connectors.

Order any attachments desired (shunt trip, undervoltage release, etc.)

Order secondary contacts as required:

- A shunt trip, undervoltage release or alarm switch requires two contacts;
- A 1A-1B auxiliary switch requires three contacts;
- A motor operator requires a maximum of four contacts;
- Others as required.

Secondary Contacts

These are used to disconnect auxiliary circuits when attachments such as shunt trip or motor operator are used. Available in multiples of four contacts with a maximum of 32 contacts for the NB Tri-Pac. They must be factory mounted. Order by description as similar to stationary or moving frame and specify number of contacts required.

Racking Crank

A special crank to engage or withdraw the moving portion of the drawout. A standard 1/2 inch hex socket with extension can be used for this purpose.

Style Number	765A767G01

Cell Switches Mounted on Drawout Frames, All Ratings

Up to four switches can be provided. Order by description.

Each switch provides NO and NC contact that transfers before reaching the test position when being withdrawn, and after the test position when being racked in.

① Drawout for FB and LA Tri-Pac, FCL, and LCL Circuit Breakers are not available. PB Tri-Pac movable is available factory-installed only. Order by description.

General Information

Engine generator molded case circuit breakers are designed specifically for application on diesel engine powered standby generators where high interrupting circuit breakers are not required. The JG through NG breakers are equipped with a special trip unit, that includes standard thermal (overload) protection and special low magnetic pickup range (FG includes a fixed thermal/magnetic pickup). The standard thermal trip unit provides overload protection for conductors per the National Electric Code. The low magnetic pickup range is approximately two to five times the continuous rating and provides closer low level short circuit protection when applied on generators that have very low short circuit capacity. This combination allows the user to customize the breaker to the generator output.

Interrupting Capacity Ratings

UL 489 Interrupting Capacity Ratings

Interrupting Capacity (Symmetrical Amperes)

Volts Ac (50/60 Hz)	
240	18,000
480	14,000
600	10,000

IEC 947-2 Interrupting Capacity Ratings

Interrupting Capacity (Symmetrical Amperes)

Volts Ac (50/60 Hz)	
220, 240	18,000/9,000
380, 415	14,000/7,000
660, 690	10,000/5,000

Standards

Engine generator molded case circuit breakers are designed to conform with the following standards:

- Underwriters Laboratories, Inc., Standard UL 489, Molded Case Circuit Breakers and Circuit Breaker Enclosures File E7819
- Canadian Standards Association Standard C22.2 No. 5, Service Entrance and Branch Circuit Breakers
- International Electrotechnical Commission Recommendations IEC 947-2, Circuit Breakers

Conformance with these standards satisfies most local and international codes, assuming user acceptability and simplified application.

Catalog Numbering System

This information is presented only as an aid to understanding catalog numbers. It is not to be used to build catalog numbers for circuit breakers.

FG breakers include both line and load side terminals.

JG, KG, LG, and NG breakers with "W" catalog number suffix do not include any terminals.

JG, KG, LG, and NG breakers without "W" catalog number suffix include both line and load terminals.

Contact Cutler-Hammer for additional ratings and internal/external accessories.

FG 3 100 W

Frame	Number of Poles	Trip Amperes	Suffix
FG	3	15	W: Without Terminals
		20	
		25	
		30	
		35	
		40	
		45	
		50	
		60	
		70	
		80	
		90	
		100	
		125	
		150	
		175	
		200	
		225	
JG		175	
		200	
		225	
		250	
KG		300	
		350	
		400	
LG		450	
		500	
		600	
NG		700	
		800	
		900	
		1000	
		1200	

The following table lists FG through NG engine generator breakers with the maximum generator kVA and kW rating. Engine generator breakers are applied at 115% of the generator full load current rating. The maximum kW rating is based on three-phase generators at 80% power factor.

Magnetic Pickup Range	Maximum Generator Rating 60 Hz						Engine Generator Breaker Catalog Number
	240 Vac		480 Vac		600 Vac		
	kVA①	kW②	kVA①	kW②	kVA①	kW②	
Fixed	5	4	11	9	14	11	FG3015
Fixed	7	6	14	12	18	14	FG3020
Fixed	9	7	18	14	23	18	FG3025
Fixed	11	9	22	17	27	22	FG3030
Fixed	13	10	25	20	32	25	FG3035
Fixed	14	12	29	23	36	29	FG3040
Fixed	16	13	32	26	41	32	FG3045
Fixed	18	14	36	29	45	36	FG3050
Fixed	22	17	43	35	54	43	FG3060
Fixed	25	20	51	40	63	51	FG3070
Fixed	29	23	58	46	72	58	FG3080
Fixed	32	26	65	52	81	65	FG3090
Fixed	36	29	72	58	90	72	FG3100
Fixed	40	32	79	64	99	79	FG3110
Fixed	45	36	90	72	113	90	FG3125
Fixed	54	43	108	87	135	108	FG3150
Fixed	63	51	126	101	158	126	FG3175
Fixed	72	58	144	116	181	144	FG3200
Fixed	81	65	162	130	203	162	FG3225
350-700	63	51	126	101	158	126	JG3175W③ JG3175
350-700	72	58	144	116	181	144	JG3200W③ JG3200
350-700	81	65	162	130	203	162	JG3225W③ JG3225
350-700	90	72	181	144	226	181	JG3250W③ JG3250
500-1000	108	87	217	173	271	217	KG3300W③ KG3300
500-1000	126	101	253	202	316	253	KG3350W③ KG3350
1000-2000	144	116	289	231	361	289	KG3400W③ KG3400
600-2500	162	130	325	260	406	325	LG3450 LG3450W③
600-2500	181	144	361	289	451	361	LG3500 LG3500W③
600-2500	217	173	433	347	542	433	LG3600 LG3600W③
800-2500	253	202	505	404	632	505	NG3700 NG3700W③
800-2500	289	231	578	462	722	578	NG3800 NG3800W③
1600-5000	325	260	650	520	812	650	NG3900 NG3900W③
1600-5000	361	289	722	578	903	722	NG31000 NG31000W③
1600-5000	433	347	867	693	1083	867	NG31200 NG31200W③

① Breaker continuous current is based on 115% of the generator full load ampere rating.
② Based on three-phase generators at 80% power factor.
③ Without terminals.

Enclosure Description

Type 1 General Purpose

- Surface or Flush Mounting
- 15-1200 Ampere Range
- 600 Volts Ac, 500 Volts Dc

Type 1 enclosed breakers are designed for use in commercial buildings, apartment buildings and other areas where a general purpose enclosure is applicable. The breaker is front operable and is capable of being padlocked in either the On or Off position. Ratings through 1200 amperes are listed with Underwriters Laboratories, Inc. as approved for service entrance application. Both surface and flush mounted enclosures are available.

Type 3R Rainproof Surface Mounting

- Interchangeable Hubs (Through 400 Amperes)
- 15-1200 Ampere Range
- 600 Volts Ac, 500 Volts Dc

This general purpose outdoor service center employs a circuit breaker inside a weatherproof sheet steel breaker enclosure to serve as a main disconnect and protective device for feeder circuits. Ratings through 1200 amperes are listed by Underwriters Laboratories, Inc. as suitable for service entrance application.

Type 12 Dustproof Surface Mounting

- No Knockouts or Other Openings
- 15-1200 Ampere Range
- 600 Volts Ac, 500 Volts Dc

The Type 12 enclosure is designed in line with specifications for special industry application where unusually severe conditions involving oil, coolant, dust and other foreign materials exist in the operating atmosphere. The handle padlocks in the Off position and the cover is interlocked with the handle mechanism to prevent opening the cover with the circuit breaker in the On position. Ratings through 1200 amperes are listed by Underwriters Laboratories, Inc. as suitable for service entrance application.

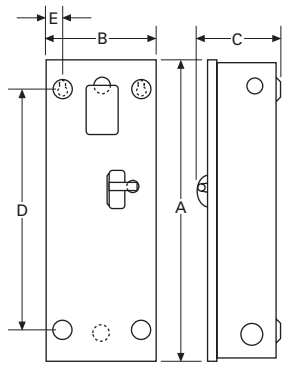

Type 1 Surface Mounted

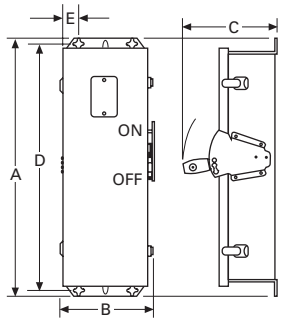

Type 3R Rainproof

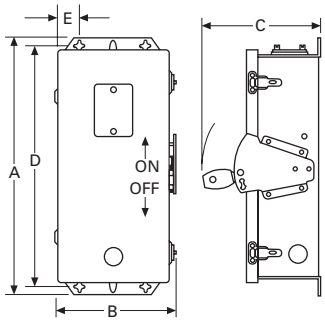

Type 12, 12K Dustproof

Enclosure Selection Data

Breaker Frame (Amperes)	Enclosure Type Class	Dimensions A Inches	A mm	B Inches	B mm	C Inches	C mm	D Inches	D mm	E Inches	E mm	App. Wt. Lbs.	Conduit Sizes, Inches	Catalog Number
FG 15-225	Type 1 Type 3R Type 12	23.25 25.66 25.66	591 652 652	8.41 8.84 8.84	214 225 226	6.28 9.31 9.31	160 237 238	18.75 24.28 24.28	476 617 618	1.20 1.70 1.70	31 43 43	15 19 18	.25, .50, .75, 1, 1.25, 1.50, 2, 2.50 .25, .50, .75, 1, 1.25, 1.50, 2, 2.50	**SFDN225** **RFDN225** **JFDN225**
JG 175-250	Type 1 Type 3R Type 12	34.70 37.50 37.53	881 891 953	10.92 11.56 11.56	227 294 294	7.20 10.22 10.22	183 260 260	30.00 35.77 35.77	762 909 909	1.88 1.94 1.94	48 49 49	31 40 37	.25, .50, 2, 2.50, 3 .25, .50, 2, 2.50, 3	**SJDN250** **RJDN250** **JJDN250**
KG 300-400	Type 1 Type 3R Type 12	38.81 41.69 41.69	986 997 997	11.06 11.75 11.75	281 298 298	10.94 14.06 14.06	278 357 357	34.00 39.90 39.90	869 1014 1015	2.28 1.97 1.97	58 50 50	53 60 53	.25, .50, .75, 1.50, 2, 2.50, 3, 3.50 .25, .50, .75, 2.50, 3, 3.50	**SKDN400** **RKDN400** **JKDN400**
LG 450-600	Type 1 Type 3R Type 12	45.88 48.31 48.31	1165 1227 1227	14.31 14.91 14.91	364 379 379	12.38 15.50 15.50	314 394 394	46.56 46.56 46.56	1183 1183 1183	1.91 1.92 1.92	48 49 49	81 84 81	.25, .50, .75, 3, 3.50, 4 .25, .50, .75, 3, 3.50, 4	**SJDN600** **RLDN600** **JLDN600**
NG 700-1200	Type 1 Type 3R Type 12	61.22 63.59 63.59	1555 1615 1615	21.44 22.00 22.00	545 559 559	15.41 17.63 17.63	391 448 448	61.84 61.84 61.84	1571 1571 1571	1.97 1.97 1.97	50 50 50	178 175 170		**SNDN1200** **RNDN1200** **JNDN1200**

Accessories

Standard Terminals

Breaker Frame	Maximum Ampere Rating	AWG Wire Range	Metric Wire Range mm^2	Catalog Number
FG	100	#14-1/0	2.5 -50	**3T100FB**①
FG	150	#4-4/0	25 -95	**3TA225FD**①
JG	250	#4-350 kcmil	25 -185	**TA250KB**
KG	350	250-500 kcmil	120 -240	**TA350K**
KG	400	3/0-250 kcmil (2)	95 -120	**3TA400K**①
LG	600	250-500 kcmil (2)	120 -240	**TA600LA**
NG	700	1-500 kcmil (2)	50 -300	**TA700NB1**
NG	1000	3/0-400 kcmil (3)	95 -185	**TA1000NB1**
NG	1200	4/0-500 kcmil (4)	120 -300	**TA1200NB1**

Neutral Kits, Insulated and Groundable

Maximum Enclosure Rating (Amperes)	Main Lug Number Size Cu/Al	Ground Lug Size Cu/Al	Catalog Number
100	(1) 14–1/0	(1) 14–1/0	**INK100**
250	(1) 6–350 kcmil	(1) 4–300 kcmil	**INK250**
400	(1) 4–750 kcmil or (2) 1/0–250 kcmil	(1) 4–300 kcmil	**INK400**
600	(2) 250–500 kcmil	(1) 4–300 kcmil	**INK600**
1200	(3) 1/0 to 750 kcmil or (4) 1/0 to 750 kcmil	(1) #6–250 kcmil	**INK1200**

Internal Accessories

Breaker Frame	Auxiliary Switch		Shunt Trip	
	1A-1B Catalog Number	2A-2B Catalog Number	Rating	Catalog Number
FG	**A1X1PK**	**A2X1PK**	12-24 Vdc	**SNT1LP03K**
JG	**A1X2PK**	**A2X2PK**	12-24 Vdc	**SNT2P04K**
KG	**A1X3PK**	**A2X3PK**	12-24 Vdc	**SNT3P05K**
LG	**A1X4PK**	**A2X4PK**	12-24 Vdc	**SNT4LP03K**
NG	**A1X5RPK**	**A2X5RPK**	12-24 Vdc	**SNT5LP03K**

① Package of 3 terminals.

General Information

UL listed dc molded case circuit breakers for use in general dc circuits and ungrounded battery supply circuits of UPS systems providing continuous, reliable ac power to computer controlled applications such as financial transactions and telecommunications.

For standard interrupting capacity 250 dc molded case circuit breakers. Refer to Index, Page 1, for appropriate Series C frame size.

The Series C dc breakers listed below use the same internal and external accessories as the standard Series C breaker. NBDC and PBDC use same internal and external accessories as standard NB and PB breakers.

Molded case circuit breakers for transportation application requiring 750 Vdc are available 15 through 2500 ampere 20 kA interrupting capacity at 750 Vdc. Breakers require 4 poles in series for 750 Vdc application. However, 750V is not a UL rating. For 750 Vdc application refer to Cutler-Hammer for ordering information. Dimensions are the same as the standard thermal-magnetic equivalent.

Interrupting Capacity Ratings

UL489 Interrupting Capacity Ratings

Circuit Breaker Type	Interrupting Capacity (Symmetrical kA)			
	Volts DC①			
	125②	250③	600④	750⑤
HFDDC	42	42	35	20
HJDDC	42	42	35	20
HKDDC	42	42	35	20
HLDDC	42	42	35	20
HMDLDC	42	42	35	20
NBDC	50	50	50	20
PBDC	75	75	75	20

Series Connection Diagrams for DC Application⑥

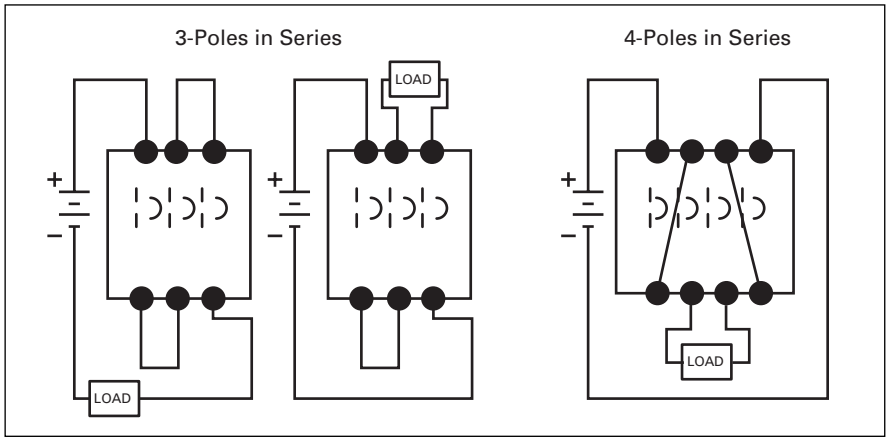

① Dc ratings apply to substantially non-inductive circuits. 8 millisecond time constant.
② 1-pole in series.
③ 2-poles in series.
④ 3-poles in series.
⑤ 4-poles in series. Not a UL listed voltage rating.
⑥ Use rated cable per NEC Connect to terminals as per breaker nameplate.

Type HFDDC DC Circuit Breakers

Maximum Continuous Ampere Rating @ 40°C	Complete Circuit Breaker with Line and Load Terminals		
	1-Pole	2-Pole	3-Pole
	Catalog Number		
1, 2, 3-Pole High Interrupting Capacity 35 kAIC @ 600 Vac			
15	HFDDC1015L	HFDDC2015L	HFDDC3015L
20	HFDDC1020L	HFDDC2020L	HFDDC3020L
25	HFDDC1025L	HFDDC2025L	HFDDC3025L
30	HFDDC1030L	HFDDC2030L	HFDDC3030L
35	HFDDC1035L	HFDDC2035L	HFDDC3035L
40	HFDDC1040L	HFDDC2040L	HFDDC3040L
45	HFDDC1045L	HFDDC2045L	HFDDC3045L
50	HFDDC1050L	HFDDC2050L	HFDDC3050L
60	HFDDC1060L	HFDDC2060L	HFDDC3060L
70	HFDDC1070L	HFDDC2070L	HFDDC3070L
80	HFDDC1080L	HFDDC2080L	HFDDC3080L
90	HFDDC1090L	HFDDC2090L	HFDDC3090L
100	HFDDC1100L	HFDDC2100L	HFDDC3100L
110	HFDDC1110L	HFDDC2110L	HFDDC3110L
125	HFDDC1125L	HFDDC2125L	HFDDC3125L
150	HFDDC1150L	HFDDC2150L	HFDDC3150L
175	–	–	HFDDC3175L
200	–	–	HFDDC3200L
225	–	–	HFDDC3225L

Instruction Leaflet/FRED Number 29C700

Type HJDDC DC Circuit Breakers

Maximum Continuous Ampere Rating @ 40°C	Circuit Breaker Frame Only①	Thermal Magnetic Trip Unit	Standard Terminals
	Catalog Number		
3-Pole High Interrupting Capacity 35 kAIC @ 600 Vac			
70	HJDDC3250F	JT3070T	TA250KB
90		JT3090T	TA250KB
100		JT3100T	TA250KB
125		JT3125T	TA250KB
150		JT3150T	TA250KB
175		JT3175T	TA250KB
200		JT3200T	TA250KB
225		JT3225T	TA250KB
250		JT3250T	TA250KB
100	HKDDC3400F	KT3100T	TA300K
125		KT3125T	TA300K
150		KT3150T	TA300K
175		KT3175T	TA300K
200		KT3200T	TA300K
225		KT3225T	TA300K

Instruction Leaflet/FRED Number 29C701

Type HKDDC DC Circuit Breakers

Maximum Continuous Ampere Rating @ 40°C	Circuit Breaker Frame Only①	Thermal Magnetic Trip Unit	Standard Terminals
	Catalog Number		
3-Pole High Interrupting Capacity 35 kAIC @ 600 Vac			
250	HKDDC3400F	KT3250T	TA350K
300		KT3300T	TA350K
350		KT3350T	TA350K
400		KT3400T	3TA400K
300	HLDDC3600F	LT3300T	TA602LD
350		LT3350T	TA602LD
400		LT3400T	TA602LD
450		LT3450T	TA602LD
500		LT3500T	TA602LD
600		LT3600T	3TA603LDK

Instruction Leaflet/FRED Number 29C702

Type HMDL DC Circuit Breakers

Maximum Continuous Ampere Rating @ 40°C	Circuit Breaker Frame Only①	Thermal Magnetic Trip Unit
	Catalog Number	
3-Pole High Interrupting Capacity 35 kAIC @ 600 Vac		
300	HMDL3800F	MT3300T
350		MT3350T
400		MT3400T
450		MT3450T
500		MT3500T
600		MT3600T
700		MT3700T
800		MT3800T

Type NBDC DC Circuit Breakers

Maximum Continuous Ampere Rating @ 40°C	Complete Circuit Breaker Factory Assembled Without Terminals①	Includes Magnetic Only Trip Unit Calibrated @ 135%	Standard Terminals
	Catalog Number		
3-Pole High Interrupting Capacity 50 kAIC @ 600 Vac			
700	NBDC3700MW	Included	TA1000NB1
800	NBDC3800MW	Included	TA1000NB1
900	NBDC3900MW	Included	TA1000NB1
1000	NBDC31000MW	Included	TA1000NB1
1200	NBDC31200MW	Included	TA1200NB1

Type PBDC DC Circuit Breakers

Maximum Continuous Ampere Rating @ 40°C	Complete Circuit Breaker Factory Assembled Without Terminals①	Includes Magnetic Only Trip Unit Calibrated @ 135%	Standard② Terminals
	Catalog Number		
3-Pole High Interrupting Capacity 75 kAIC @ 600 Vac			
1600	PBDC31600W	Included	BA2000PB
2000	PBDC32000W	Included	BA2000PB
2500	PBDC32500W	Included	BA2500PB

Instruction Leaflet/FRED Number 15560

① Complete circuit breaker includes frame, trip unit, and terminals.

Type GFM

Type GFM Ground Fault Protection Device

Description

Cutler-Hammer Type GFM devices are Class 1 Ground Fault Sensing and Relaying devices designed to comply with the requirements outlined in Underwriters Laboratories, Inc. Standards for Safety entitled: Ground Fault Sensing and Relaying Equipment, UL1053.

Type GFM devices, when properly installed on a grounded electrical distribution system, will sense phase to ground fault currents and cause a disconnect to open and clear the fault instantaneously at predetermined current values. These devices have a maximum voltage rating of 600V, 50/60 Hertz and may be applied in accordance with Article 230-95 of the National Electrical Code.

Type GFM Ground Fault Protective Devices are self-contained combination sensing and relaying devices designed primarily for application on motor circuits and fixed loads where low-level Ground Fault Equipment Protection is required.

GFM devices are available in two basic types with each type having two physical sizes. The two basic types differ in the type of output circuit provided. The first type, designated either GFM2 or GFM4, employs an internal relay having S.P.D.T. contacts that will operate a remote shunt trip device where control power is available.

The second type, designated either GFM2A or GFM4A. is completely solid state with an output SCR circuit designed to operate a remote, low-energy, flux transfer shunt trip mounted in a molded case breaker. No supplementary control power for the shunt trip is required.

Size Selection

The proper size selection is a function of the conductor size of the equipment being protected. Types GFM2/GFM2A have approximately a two-inch window opening. Types GFM4/GFM4A have approximately a four-inch window opening.

Rating Selection

The basic Ground Fault Current Pickup rating of either type GFM device is 5 amperes, i.e., each unit when properly installed will initiate a trip signal to a remote shunt trip with the presence of a 5 ampere Ground Fault Current within established tolerance limits. Separate optional rating plugs are available to alter the pickup rating to a maximum of 100 amperes.

Control Power

Internal control power is not required to operate Type GFM Ground Fault Protective devices. All internal control power required is derived from the Ground Fault current through the internal current sensor.

External control power is required to operate the remote shunt trips used in conjunction with Type GFM2 and GFM4 devices.

External control power is not required with Type GFM2A and GFM4A devices to operate the special remote, low-energy, flux transfer shunt trips used in molded case circuit breakers.

Trip Indication/Reset

A combination visual indicator and reset button is provided on the top of Type GFM2 and GFM4 devices to indicate the initiation of a tripping action to clear a Ground Fault. The operation of the internal relay will cause the white button to visibly raise.

To reset the device, the Indicator/ Reset button must be depressed. Failure to reset the device will not allow the associated disconnect device to be reclosed.

No Indicator/Reset button is provided on Types GFM2A or GFM4A since an internal SCR is used in the output circuit. These devices reset automatically when the disconnect opens to clear the Ground Fault.

Application

Type GFM devices may be installed in Zero Sequence or Ground Return Sensing methods, Proper Ground Fault Protection schemes are dependent upon proper system installation and grounding methods.

Mounting

Each Type GFM device contains a Ground Fault Sensor which is a special current transformer. These are insulated devices which can be mounted directly to enclosure surfaces. Four tubular rivets secure the sensor housing. These four (0.200 dia.) mounting holes can be used to mount the GFM device in either a vertical or horizontal mounting position.

Optional mounting brackets as shown on the next page are available. These brackets may be mounted on either the bottom or side depending upon the installation requirements.

Regardless of the mounting method used, the top of the device with the visual indicator/ reset button and nameplate instructions should be maintained in a visual position after installation. GFM devices should be installed so that all conductors passing through the conductor window are physically centered.

Ordering Information

Order by catalog number or style number:

1 Basic GFM Unit

1 Rating plug if required

1 Mounting bracket if required

1 Circuit breaker with standard shunt trip factory installed (as required), or optionally when possible, a circuit breaker and field mountable shunt trip as separate items.

Rating Plug Installation

To install an optional rating plug to obtain other than the minimum 5 ampere rating, remove the terminal cover held in position by a single screw and retention groove. With the cover removed, insert the rating plug in the position indicated. The rating plug is held captive in position with the addition of the terminal cover after the wiring is completed. With the terminal cover in position, the ampere rating of the rating plug remains visible.

Output Circuitry

Contact ratings for Type GFM2 and GFM4 are 10 amperes continuous, 240 volts Ac maximum. Types GFM2A and GFM4A are intended to be used only with remote flux transfer shunt trips.

Selection Data

GFM Basic Units

Output Type	Approximate Window Opening, Inches	Basic Ampere Rating (Plug Omitted)	Operating Time @ 10 x Ampere Rating	Catalog Number
Unit for Use with Standard Shunt Trip				
Relay	2	5	0.03 Seconds	**GFM2**
Relay	4	5	0.03 Seconds	**GFM4**
Unit for Use with Flux Transfer Shunt Trips				
SCR	2	5	0.03 Seconds	**GFM2A**
SCR	4	5	0.03 Seconds	**GFM4A**

Instruction Leaflet/FRED Number 14945

GFM Optional Rating Plugs

Ampere Rating	Catalog Number
10	**GFMP10**
25	**GFMP25**
50	**GFMP50**
50	**GFMP75**
100	**GFMP100**

Optional Mounting Brackets

Includes two (2) brackets and mounting hardware

GFM Type	Bracket Kit Style Number
GFM2/2A	**750B295G01**
GFM4/4A	**750B295G02**

Type GFR

Description

The GFR ground fault relays, current sensors, test panels and accessory devices are UL listed by Underwriters Laboratories, Inc. in accordance with their standard for Ground Fault Sensing and Relaying Equipment, UL 1053, under File E48381.①

A Type GFR ground fault protection system, when properly installed on a grounded electrical system, will sense phase-to-ground fault currents. When the level of fault current is in excess of the pre-selected current pickup and time delay settings, the GFR relay will initiate a trip action of a disconnect device, which will open the faulted circuit and clear the fault.

The GFR devices are UL Class I devices designed to protect electrical equipment against extensive damage from arcing ground faults.

A basic Type GFR ground fault protection system consists of a ground fault relay②, a ground fault current sensor and a disconnect device equipped with a shunt trip device. This disconnect device can be a molded case circuit breaker, a power circuit breaker, a bolted pressure switch or other fusible disconnect device, suitable for application with UL Class I Ground Fault Sensing and Relaying equipment.

Additional optional equipment can be added to the protection system to meet the requirements of the specifying engineer, including:

- Ground Fault Test Panel
- Ground Fault Warning Indicator Relay
- Ground Fault Indicating Ammeter

GFR relays are available with zone selective interlocking circuitry to interlock several relays within the same system. This allows the relay which detects a ground fault to instantly clear the fault by tripping the disconnect device. The relay simultaneously sends a signal to relay units "upstream" from the fault to time delay or to block their operation completely. Current sensors in various designs provide a range of "window" sizes to accommodate standard bus and cable arrangements.

Shunt trip attachments may be ordered for field mounting in Cutler-Hammer molded case circuit breakers, or may be ordered factory installed in the breaker.

① Suitable for either surface or semi-flush mounting.
② These devices are also listed with CSA under their file number 43357.

GFR Relay

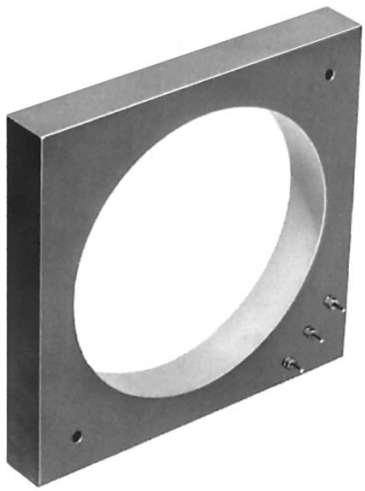

Typical Current Sensor

Electrical Ratings

GFR Relay

Ground Fault Detection Ranges:
1 to 12, 5 to 60 or 100 to 1200 Amperes

Output contacts:

240 Volt, 50/60 Hz:	3.0 Amperes
120 Volt, 50/60 Hz:	6.0 Amperes
28 Volt Dc:	3.0 Amperes
125 Volt Dc:	.5 Amperes

Control power requirements:
120 Volt, 50/60 Hz: .125 Amperes, or 125 Volt Dc (optional)

Sensor:
600 Volts, 50/60 Hz maximum system voltage

Ordering Information

Each installation requires:

1. One relay unit (select trip ampere as required)
2. One current sensor (select configuration required)
3. One circuit breaker or disconnect device with shunt trip, or a shunt trip attachment for mounting in existing breaker.
4. Test panel. (Optional)

GFR Relay

GFR Relay Types	Catalog Numbers①		
	Ground Fault Pickup Amperes		
	1-12	5-60	100-200
For 120 Volt 50/60 Hz Control			
Electrical Reset with Zone Interlocking	**GRF12EI**	**GFR60EI**	**GFR1200EI**
Electrical Reset without Zone Interlocking	**GRF12E**	**GFR60E**	**GFR1200E**
Mechanical Reset with Zone Interlocking	**GRF12MI**	**GFR60MI**	**GFR1200MI**
Mechanical Reset without Zone Interlocking	**GRF12MI**	**GFR60MI**	**GFR1200MI**
For 120 Volt Dc Control			
Electrical Reset with Zone Interlocking	**GRF12EID**	**GFR60EID**	**GFR1200EID**
Electrical Reset without Zone Interlocking	**GRF12ED**	**GFR60ED**	**GFR1200ED**
Mechanical Reset with Zone Interlocking	**GRF12MID**	**GFR60MID**	**GFR1200MID**
Mechanical Reset without Zone Interlocking	**GRF12MID**	**GFR60MID**	**GFR1200MID**

Current Sensor

Window Size	Style Number
Used with Relays Rated 1-12 Amperes	
5.50 In. I.D.	**1283C45G01**
Used with Relays Rated 5-60 Amperes	
2.50 In. I.D.	**179C768G01**
5.50 In. I.D.	**1256C13G01**
8.25 In. I.D.	**179C767G01**
7.81 x 11.00 In. Rect.②	**1257C88G04**
3.31 x 24.94 In. Rect.②	**1257C92G03**
Used with Relays Rated 100-1200 Amperes	
2.50 In. I.D.	**179C768G02**
5.50 In. I.D.	**1256C13G02**
8.25 In. I.D.	**179C767G02**
7.81 x 11.00 In. Rect.②	**1257C88G03**
9.94 x 16.94 In. Rect.②	**1257C90G02**
9.94 x 23.94 In. Rect.②	**1257C91G02**
15.94 x 19.94 In. Rect.②	**1257C89G02**
3.31 x 24.94 In. Rect.②	**1257C92G04**
6.75 x 29.64 In. Rect.②	**1255C39G03**

Instruction Leaflet/FRED Number 15321

① Suitable for either surface or semi-flush mounting.
② One end removable for installation.
③ When a mechanically reset relay is used with a test panel, both the relay and test panel must be reset following either a simulated ground fault test or actual ground fault.
④ Not UL listed.

Accessories

Test Panel (120 Volts Ac)③

Used to test the ground fault system, to give an indication the relay has tripped the breaker, and to reset the relay after tripping④. These functions may be separately mounted pilot devices.

Optional Test Panel

Control	Test	Catalog Number
120V 50/60 Hz	120V 50/60 Hz	**GFRTP**
125V Dc	120V 50/60 Hz	**GFRTPD**

Ground Fault Warning Indicator

This is an accessory item for use with GFR Relays with interlocking circuitry. At approximately 30-50% of the Relay pickup setting, the indicator switches separate 120 volt Ac control power to a lamp or relay, (not included) to give an indication of a ground fault. The indicator is rated 110/120 volts Ac 50/60 Hz for a maximum indicator load of .5 amperes.

Ground Fault Warning Indicator	Style Number
Manual Reset	**1234C67G01**
Self-Resetting	**1234C67G02**

Indicating Ammeter④

The optional indicating ammeter. It connects to the sensor terminals, through a momentary contact pushbutton, and will indicate (in amperes) any ground fault current flowing through the sensor. Kit includes the ammeter and pushbutton.

GFR System Used with	Kit Style Number
1-12 Ampere	**752B820G01**
5-60 Ampere	**752B820G02**
100-1200 Ampere	**752B820G03**

Shunt Trip Attachments

Use 120 volt Ac shunt trips.

Face Plate

Recommended when these relays are semi-flush mounted, to close the door cutout opening.

Description	Style Number
Face Plate	**752B410G01**

Alarm Switch

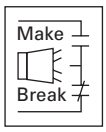

General Information

For remote indication of automatic trip operation. Does not function with manual switching; however, it will operate when either a shunt trip or undervoltage release is operated.

A "make" contact closes and a "break" contact opens when the alarm/lockout switch operates. The switch automatically resets when the circuit breaker is reset.

Ordering Information

G-Frame

Alarm Switch (RH only)①

Electrical Rating			Contact Arrangement	Style Number②③④	Factory Suffix
Volts	Frequency	Amperes			
Alarm Switch					
240	50/60 Hz	6	1 Make/ 1 Break	**1288C75G03**	**B3**
Alarm Switch Auxiliary Switches Combination					
240	50/60 Hz	6	1 Make/ 1 Break and 1a/1b	**1288C76G09**	**B13**

Instruction Leaflet/FRED Number 15552

F-Frame

Electrical Rating Data⑤⑥

Maximum Voltage	Frequency	Maximum Current Amperes	Dielectric Withstand Voltage
Multi-Pole Circuit Breakers			
600	50/60 Hz	6	2500
125	Dc	0.50⑦	2200
250	Dc	0.25⑦	2200
Single-Pole Circuit Breakers			
125/250	50/60 Hz	6⑦	2000
28	Dc	3⑦	2000
28	Dc	5⑧	2000

Alarm Switch①

Number of Contacts (Make and Break)	Mounting Location (Pole)	Factory Mounted				Field Mounted	
		Connection Type and Location				Field Installation Kits⑨	
		18-Inch Pigtail Leads			Terminal Block	Pigtail Leads	Terminal Block
		Same Side	Rear⑩	Opposite Side	Same Side		
		Suffix Number				Catalog Number	
1	Left⑪ Right	**B01** **B05**	**B02** **B06**	**B03** **B07**	**B04** **B08**	**A1L1LPK** **A1L1RPK**	**A1L1LTK** **A1L1RTK**
2	Left⑪ Right	**B09** **B12**	**B10** **B13**	– –	**B11** **B14**	**A2L1LPK** **A2L1RPK**	**A2L1LTK** **A2L1RTK**
1 (Make Only)	Single Pole	**B15⑫**	–	–	–	–	–

Instruction Leaflet/FRED Number 29C180

① F-Frame circuit breakers are factory sealed. Underwriters Laboratories, Inc., requires that internal accessories be installed at the factory. Internal accessories are UL listed for factory installation under E7819. Where local codes and standards permit and UL listing is not required, internal accessories can be field installed. Accessory installation should be done before the circuit breaker is mounted and connected.
② Includes 24-inch external pigtail leads,18 AWG (16-.010).
③ A maximum of two internal accessories may be mounted in a three-pole circuit breaker.
④ Suitable for mounting in right pole only of 2- or 3-pole breaker.
⑤ Endurance: 6000 electrical operations plus 4000 mechanical operations.
⑥ Endurance: 6000 electrical operations plus 2000 mechanical operations.
⑦ Non-inductive load.
⑧ Inductive (L/R = 0.026).
⑨ Not listed with Underwriters Laboratories, Inc., for field installation.
⑩ Standard pigtail lead exit location.
⑪ Standard mounting location.
⑫ Factory installation only. Leads exit load end of circuit breaker.

J-Frame

Electrical Rating Data①②

Maximum Voltage	Frequency	Maximum Current Amperes	Dielectric Withstand Voltage
600 125 250	50/60 Hz Dc Dc	6 0.50③ 0.25③	2500

Alarm Switch

Number of Contacts (Make and Break)	Mounting Location (Pole)	Factory Mounted				Field Mounted	
		Connection Type and Location				Field Installation Kits④	
		18-Inch Pigtail Leads			Terminal Block	Pigtail Leads	Terminal Block
		Same Side	Rear⑤	Opposite Side	Same Side		
		Suffix Number				Catalog Number	
1	Left⑥ Right	B01 B05	B02 B06	B03 B07	B04 B08	A1L2LPK A1L2RPK	A1L2LTK A1L2RTK⑦

Instruction Leaflet/FRED Number 29C181

K-Frame

Electrical Rating Data②⑧

Maximum Voltage	Frequency	Maximum Current Amperes	Dielectric Withstand Voltage
600 125 250	50/60 Hz Dc Dc	6 0.50③ 0.25③	2500

Alarm Switch

Number of Sets of Contacts (1M and 1B)	Mounting Location (Pole)	Factory Mounted				Field Mounted	
		Connection Type and Location				Field Installation Kits④	
		18-Inch Pigtail Leads			Terminal Block	Pigtail Leads	Terminal Block
		Same Side	Rear⑤	Opposite Side	Same Side		
		Suffix Number				Catalog Number	
1	Left⑥ Right	B01 B05	B02 B06	B03 B07	B04 B08	A1L3LPK A1L3RPK	A1L3LTK A1L3RTK
2	Left⑥ Right	B09 B12	B10 B13	– –	B11 B14	A2L3LPK A2L3RPK	A2L3LTK A2L3RTK

Instruction Leaflet/FRED Number 29C182

L- and M-Frames

Electrical Rating Data②⑧

Maximum Voltage	Frequency	Maximum Current Amperes	Dielectric Withstand Voltage
600 125 250	50/60 Hz Dc Dc	6 0.50③ 0.25③	2500

Alarm Switch

Number of Sets of Contacts (1M and 1B)	Mounting Location (Pole)	Factory Mounted				Field Mounted	
		Connection Type and Location				Field Installation Kits④	
		18-Inch Pigtail Leads			Terminal Block	Pigtail Leads	Terminal Block
		Same Side	Rear⑤	Opposite Side	Same Side		
		Suffix Number				Catalog Number	
1	Left⑥ Right	B01 B05	B02 B06	B03 B07	B04 B08	A1L4LPK A1L4RPK	A1L4LTK A1L4RTK
2	Left⑥ Right	B09 B12	B10 B13	– –	B11 B14	A2L4LPK A2L4RPK	A2L4LTK A2L4RTK

Instruction Leaflet/FRED Number 29C183

① Endurance: 6000 electrical operations plus 2000 mechanical operations.
② Pigtail wire size: No. 18 AWG (0.82 mm^2).
③ Non-inductive load.
④ Listed with Underwriters Laboratories, Inc., for field installation on interchangeable trip unit breakers under E64983.
⑤ Standard mounting location.
⑥ Standard mounting location – leads exit rear of breaker.
⑦ Not for use on 4-pole circuit breakers.
⑧ Endurance – 5,000 electrical operations plus 1000 mechanical operations.

N-Frame

Electrical Rating Data①

Maximum Voltage	Frequency	Maximum Current Amperes	Dielectric Withstand Voltage
600 125 250	50/60 Hz Dc Dc	6 0.50② 0.25②	2500

Alarm Switch

Number of Sets of Contacts (Make and Break)	Mounting Location (Pole)	Factory Mounted				Field Mounted	
		Connection Type and Location				Field Installation Kits③	
		18-Inch Pigtail Leads			Terminal Block	Pigtail Leads	Terminal Block
		Same Side	Rear④	Opposite Side	Same Side		
		Suffix Number				Catalog Number	
1	Left Right④	B01 B05	B02 B06	B03 B07	B04 B08	A1L5LPK A1L5RPK	A1L5LTK A1L5RTK
2	Left Right④	B09 B12	B10 B13	– –	B11 B14	A2L5LPK A2L5RPK	A2L5LTK A2L5RTK

Instruction Leaflet/FRED Number 29C184

R-Frame

Electrical Rating Data⑤⑥

Maximum Voltage	Frequency	Maximum Current Amperes
600 125 250	50/60 Hz Dc Dc	6 0.50② 0.25②

Alarm Switch (RH only)

Number of Contacts (Make and Break)	Factory Mounted	Field Mounted
	Connection Type and Location	Field Installation Kits③
	18-Inch Pigtail Leads	Pigtail Leads
	Suffix Number⑦	Catalog Number⑦
1	B05	A1L6RPK
2	B12	A2L6RPK

Instruction Leaflet/FRED Number 29C185

① Endurance – 3000 electrical operations plus 1000 mechanical operations.
② Non-inductive load.
③ Listed with Underwriters Laboratories, Inc. for field installation under E64983.
④ Standard mounting location – leads exit rear of breaker.
⑤ Endurance: 500 electrical operations plus 2500 mechanical operations.
⑥ Pigtail wire size: No. 18 AWG (0.82 mm^2). Leads are red, black and blue.
⑦ A maximum of three ASL plug-in modules may be installed in a circuit breaker.

Auxiliary Switch

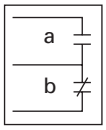

General Information

The auxiliary switch provides circuit breaker contact status information by monitoring the position of the molded cross bar which contains the moving contact arms. The auxiliary switch is used for remote indication and interlock system verification, and consists of one or two SPDT switches housed in a plug-in module. Each SPDT switch has one "a" and one "b" contact. When the circuit breaker contacts are open, the "a" contact is open and the "b" contact is closed.

Ordering Information

G-Frame

Auxiliary (RH only)

Electrical Ratings			Contact Arrangement	Style Number①②③	Factory Suffix
Volts	Frequency	Amperes			
240	50/60 Hz	6	1a/1b	**1288C74G03**	**A3**
240	50/60 Hz	6	2a/2b	**1288C73G03**	**A6**

Instruction Leaflet/FRED Number 15551

F-Frame

Electrical Rating Data④⑤

Maximum Voltage	Frequency	Maximum Current Amperes	Dielectric Withstand Voltage
125⑥	50/60 Hz	1	2500
600	50/60 Hz	6	2500
125	Dc	0.50⑦	2200
250	Dc	0.25⑦	2200

Auxiliary Switch

Number of Contacts a and b	Mounting Location (Pole)	Factory Mounted				Field Mounted	
		Connection Type and Location				Field Installation Kits⑧	
		18-Inch Pigtail Leads			Terminal Block	Pigtail Leads	Terminal Block
		Same Side	Rear⑨	Opposite Side	Same Side		
		Suffix Number				Catalog Number	
1	Left⑤	**A01**	**A02**	**A03**	**A04**	**A1X1PK**	**A1X1LTK**
		A15⑩	**A16⑩**	**A17⑩**	–	**E1X1PK**	–
	Right or Neutral	**A05**	**A06**	**A07**	**A08**	**A1X1PK**	**A1X1RTK⑬**
		A18⑩	**A19⑩**	**A20⑩**	–	–	–
2	Left⑤	**A09**	**A10**	–	**A11**	**A2X1LPK**	**A2X1LTK**
		A21⑩	**A22⑩**	–	–	**E2X1LPK**	–
	Right or Neutral	**A12**	**A13**	–	**A14**	**A2X1RPK**	**A2X1RTK⑬**
		A23⑩	**A24⑩**	–	–	**E2X1RPK**	–

Instruction Leaflet/FRED Number 29C120

J-Frame

Electrical Rating Data④⑤

Maximum Voltage	Frequency	Maximum Current Amperes	Dielectric Withstand Voltage
600	50/60 Hz	6	2500
125	Dc	0.50⑦	
250	Dc	0.25⑦	

Auxiliary Switch

Number of Sets of Contacts (1a and 1b)	Mounting Location (Pole)	Factory Mounted				Field Mounted	
		Connection Type and Location				Field Installation Kits⑪	
		18-Inch Pigtail Leads			Terminal Block	Pigtail Leads	Terminal Block
		Same Side	Rear⑫	Opposite Side	Same Side		
		Suffix Number				Catalog Number	
1	Left	**A01**	**A02**	**A03**	**A04**	**A1X2PK**	**A1X2LTK**
	Right⑫	**A05**	**A06**	**A07**	**A08**	**A1X2PK**	**A1X2RTK⑬**
2	Left	**A09**	**A10**	–	**A11**	**A2X2PK**	**A2X2LTK**
	Right⑫	**A12**	**A13**	–	**A14**	**A2X2PK**	**A2X2RTK⑬**

Instruction Leaflet/FRED Number 29C121

① Includes 24-inch external pigtail leads, #18 AWG (16-.010).
② A maximum of two internal accessories may be mounted in a three-pole circuit breaker.
③ Suitable for mounting in right pole only of 2- or 3-pole breaker.
④ Endurance: 6000 electrical operations plus 4000 mechanical operations.
⑤ Pigtail wire size: No. 18 AWG (0.82 mm^2).
⑥ For use in electronic circuit of 100 micro-amperes and 15 Vdc minimum.
⑦ Non-inductive load.
⑧ Not listed with Underwriters Laboratories, Inc., for field installation.
⑨ Standard pigtail lead exit location.
⑩ 125-volt (Max.), 50/60 Hz switch for use in electronic circuit of 100 micro-amp and 15 Vdc minimum.
⑪ Listed with Underwriters Laboratories, Inc. for field installation or interchangeable trip unit breakers under E64983.
⑫ Standard mounting location – leads exit rear of breaker.
⑬ Not for use on 4-pole circuit breakers.

K-Frame

Electrical Rating Data①②

Maximum Voltage	Frequency	Maximum Current Amperes	Dielectric Withstand Voltage
600 125 250	50/60 Hz Dc Dc	6 0.50③ 0.25③	2500

Auxiliary Switch

Number of Sets of Contacts (1M and 1B)	Mounting Location (Pole)	Factory Mounted				Field Mounted	
		Connection Type and Location				Field Installation Kits④	
		18-Inch Pigtail Leads			Terminal Block	Pigtail Leads	Terminal Block
		Same Side	Rear⑤	Opposite Side	Same Side		
		Suffix Number				Catalog Number	
1	Left Right⑤	A01 A05	A02 A06	A03 A07	A04 A08	A1X3PK A1X3PK	A1X3LTK A1X3RTK⑥
2	Left Right⑤	A09 A12	A10 A13	– –	A11 A14	A2X3PK A2X3PK	A2X3LTK A2X3RTK⑥
3	Left Right	A18 A17	– –	– –	A15 A16	A3X3LPK A3X3RPK	A3X3LTK A3X3RTK⑥

Instruction Leaflet/FRED Number 29C122

L- and M-Frames

Electrical Rating Data②

Maximum Voltage	Frequency	Maximum Current Amperes	Dielectric Withstand Voltage
600 125 250	50/60 Hz Dc Dc	6 0.50③ 0.25③	2500

Auxiliary Switch

Number of Sets of Contacts (1a and 1b)	Mounting Location (Pole)	Factory Mounted				Field Mounted	
		Connection Type and Location				Field Installation Kits④	
		18-Inch Pigtail Leads			Terminal Block	Pigtail Leads	Terminal Block
		Same Side	Rear⑤	Opposite Side	Same Side		
		Suffix Number				Catalog Number	
1	Left Right⑤	A01 A05	A02 A06	A03 A07	A04 A08	A1X4PK A1X4PK	A1X4LTK A1X4RTK⑥
2	Left Right⑤	A09 A12	A10 A13	– –	A11 A14	A2X4PK A2X4PK	A2X4LTK A2X4RTK⑥
3	Left Right⑤	A18 A17	– –	– –	A15 A16	A3X4PK A3X4PK	A3X4LTK A3X4RTK⑥

Instruction Leaflet/FRED Number 29C123

① Endurance – 5000 electrical operations plus 1000 mechanical operations.
② Pigtail wire size – No. 18 AWG (0.82 mm^2).
③ Non-inductive load.
④ Listed with Underwriters Laboratories, Inc. for field installation under E64983.
⑤ Standard mounting location – leads exit rear of breaker.
⑥ Not for use on 4-pole circuit breaker.

N-Frame

Electrical Rating Data①②

Maximum Voltage	Frequency	Maximum Current Amperes	Dielectric Withstand Voltage
600 125 250	50/60 Hz Dc Dc	6 0.50③ 0.25③	2500

Auxiliary Switch

Number of Sets of Contacts (1A and 1B)	Mounting Location (Pole)	Factory Mounted				Field Mounted	
		Connection Type and Location				Field Installation Kits④	
		18-Inch Pigtail Leads			Terminal Block	Pigtail Leads	Terminal Block
		Same Side	Rear⑤	Opposite Side	Same Side		
		Suffix Number				Catalog Number	
1	Left Right⑤	A01 A05	A02 A06	A03 A07	A04 A08	A1X5LPK A1X5RPK	A1X5LTK A1X5RTK⑥
2	Left Right⑤	A09 A12	A10 A13	– –	A11 A14	A2X5LPK A2X5RPK	A2X5LTK A2X5RTK⑥
3	Left Right⑤	A18 A17	– –	– –	A15 A16	A3X5LPK A3X5RPK	A3X5LTK A3X5RTK⑥

Instruction Leaflet/FRED Number 29C124

R-Frame

Electrical Rating Data⑦⑧

Maximum Voltage	Frequency	Maximum Current Amperes
600 125 250	50/60 Hz Dc Dc	6 0.50③ 0.25③

Auxiliary Switch (RH only)

Number of Contacts (Make and Break)	Factory Mounted	Field Mounted
	Connection Type and Location	Field Installation Kits④
	18-Inch Pigtail Leads	Pigtail Leads
	Suffix Number⑨	Catalog Number⑨
2	A12	A2X6RPK
4	A19	A4X6RPK

Instruction Leaflet/FRED Number 29C125

① Endurance – 3000 electrical operations plus 1000 mechanical operations.
② Pigtail wire size – No. 18 AWG (0.82 mm^2).
③ Non-inductive load.
④ Listed with Underwriters Laboratories, Inc. for field installation under E64983.
⑤ Standard mounting location – leads exit rear of breaker.
⑥ Not for use on 4-pole circuit breaker.
⑦ Endurance: 500 electrical operations plus 2500 mechanical operations.
⑧ Pigtail wire size: No. 18 AWG (0.82 mm^2). Leads are red, black and blue.
⑨ A maximum of two auxiliary switches (any combination of 2a/2b or 4a/4b plug-in modules may be installed in a circuit breaker.

Auxiliary Switch and Alarm Switch Combination

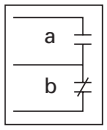

General Information

Each catalog number listed in the following table includes one auxiliary switch and one alarm switch. In an auxiliary switch ASL switch combination, the auxiliary switch is always mounted on the side of the plug-in module next to the center pole of the circuit breaker.

Ordering Information

F-Frame

Electrical Rating Data①②

Maximum Voltage	Frequency	Maximum Current Amperes	Dielectric Withstand Voltage
125	50/60 Hz	1	2500
600	50/60 Hz	6	2500
125	Dc	0.50③	2200
250	Dc	0.25③	2200

Auxiliary Switch and Alarm Switch Combination

Mounting Location (Pole)	Factory Mounted			Field Mounted	
	Connection Type and Location			Field Installation Kits④	
	18-Inch Pigtail Leads		Terminal Block	Pigtail Leads	Terminal Block
	Same Side	Rear⑤	Same Side		
	Suffix Number			Catalog Number	
Left⑤ Right	C01 C04	C02 C05	C03 C06	AAL1LPK AAL1RPK	AAL1LTK AAL1RTK⑥

Instruction Leaflet/FRED Number 29C180

J-Frame

Electrical Rating Data⑦②

Maximum Voltage	Frequency	Maximum Current Amperes	Dielectric Withstand Voltage
600	50/60 Hz	6	2500
125	Dc	0.50③	
250	Dc	0.25③	

Auxiliary Switch and Alarm Switch Combination

Number of Sets of Contacts (1a and 1b and 1M and 1B)	Mounting Location (Pole)	Factory Mounted				Field Mounted	
		Connection Type and Location				Field Installation Kits⑧	
		18-Inch Pigtail Leads			Terminal Block	Pigtail Leads	Terminal Block
		Same Side	Rear⑨	Opposite Side	Same Side		
		Suffix Number				Catalog Number	
1	Left Right⑨	C01 C04	C02 C05	– –	C03 C06	AAL2LPK AAL2RPK	AAL2LTK AAL2RTK⑥

Instruction Leaflet/FRED Number 29C181

K-Frame

Electrical Rating Data⑩②

Maximum Voltage	Frequency	Maximum Current Amperes	Dielectric Withstand Voltage
600	50/60 Hz	6	2500
125	Dc	0.50③	
250	Dc	0.25③	

Auxiliary Switch and Alarm Switch Combination

Number of Sets of Contacts (1a and 1b and 1M and 1B)	Mounting Location (Pole)	Factory Mounted				Field Mounted	
		Connection Type and Location				Field Installation Kits⑧	
		18-Inch Pigtail Leads			Terminal Block	Pigtail Leads	Terminal Block
		Same Side	Rear⑨	Opposite Side	Same Side		
		Suffix Number				Catalog Number	
1	Left Right⑨	C01 C04	C02 C05	– –	C03 C06	AAL3LPK AAL3RPK	AAL3LTK AAL3RTK

Instruction Leaflet/FRED Number 29C182

① Endurance: 6000 electrical operations plus 4000 mechanical operations.
② Pigtail wire size: No. 18 AWG (0.82 mm^2).
③ Non-inductive load.
④ Not listed with Underwriters Laboratories, Inc., for field installation.
⑤ Standard mounting location.
⑥ Not for use on 4-pole circuit breakers.
⑦ Endurance – 6000 electrical operations plus 2000 mechanical operations.
⑧ Listed with Underwriters Laboratories, Inc. for field installation or interchangeable trip unit breakers under E64983.
⑨ Standard mounting location – leads exit rear of breaker.
⑩ Endurance – 5000 electrical operations plus 1000 mechanical operations.

L- and M-Frames

Electrical Rating Data①②

Maximum Voltage	Frequency	Maximum Current Amperes	Dielectric Withstand Voltage
600 125 250	50/60 Hz Dc Dc	6 0.50③ 0.25③	2500

Auxiliary Switch and Alarm Switch Combination

Number of Sets of Contacts	Mounting Location (Pole)	Factory Mounted				Field Mounted	
		Connection Type and Location				Field Installation Kits④	
		18-Inch Pigtail Leads			Terminal Block	Pigtail Leads	Terminal Block
		Same Side	Rear⑤	Opposite Side	Same Side		
		Suffix Number				Catalog Number	
1A, 1B and 1 Make/ 1 Break	Left Right⑤	**C01** **C04**	**C02** **C05**	– –	**C03** **C06**	**AA114LPK** **AA114RPK**	**AA114LTK** **AA114RTK⑥**
2A, 2B and 1 Make/ 1 Break	Left Right⑤	**C07** **C10**	**C08** **C11**	– –	**C12** **C13**	**AA214LPK** **AA214RPK**	**AA214LTK** **AA214RTK⑥**
3A, 3B and 1 Make/ 1 Break	Left Right⑤	**C14** **C15**	– –	– –	– –	**AA314LPK** **AA314RPK**	– –

Instruction Leaflet/FRED Number 29C183

N-Frame

Electrical Rating Data⑦②

Maximum Voltage	Frequency	Maximum Current Amperes	Dielectric Withstand Voltage
600 125 250	50/60 Hz Dc Dc	6 0.50③ 0.25③	2500

Auxiliary Switch and Alarm Switch Combination

Number of Sets of Contacts	Mounting Location (Pole)	Factory Mounted				Field Mounted	
		Connection Type and Location				Field Installation Kits④	
		18-Inch Pigtail Leads			Terminal Block	Pigtail Leads	Terminal Block
		Same Side	Rear⑤	Opposite Side	Same Side		
		Suffix Number				Catalog Number	
1A, 1B and 1 Make/ 1 Break	Left Right⑤	**C01** **C04**	**C02** **C05**	– –	**C03** **C06**	**AA115LPK** **AA115RPK**	**AA115LTK** **AA115RTK⑥**
2A, 2B and 1 Make/ 1 Break	Left Right⑤	**C07** **C10**	**C08** **C11**	– –	**C12** **C13**	**AA215LPK** **AA215RPK**	**AA215LTK** **AA215RTK⑥**

Instruction Leaflet/FRED Number 29C184

① Endurance – 5000 electrical operations plus 1000 mechanical operations.
② Pigtail wire size – No. 18 AWG (0.82 mm^2).
③ Non-inductive load.
④ Listed with Underwriters Laboratories, Inc. for field installation under E64983.
⑤ Standard mounting location – leads exit rear of breaker.
⑥ Not for use on 4-pole circuit breaker.
⑦ Endurance – 3000 electrical operations plus 1000 mechanical operations.

Shunt Trip

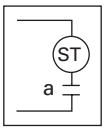

General Information

The shunt trip provides remote controlled tripping of the circuit breaker. The shunt trip consists of an intermittent rated solenoid with a tripping plunger and a cutoff switch assembled to a plug-in module.

When required for ground fault protection applications, certain Ac rated shunt trips, as noted in the Electrical Rating Table, are suitable for operation at 55 percent of rated voltage.

Ordering Information

Select shunt trip catalog number for the voltage within the indicated voltage range. Shunt trip coils are designed to be applied at specific Ac or Dc voltages within the voltage range shown. Electrical ratings are also shown on applicable circuit breaker accessory nameplates.

G-Frame

Shunt Trip (LH 3-Pole only)

Electrical Ratings			Catalog Number	Suffix Number
Volts	Frequency	Amperes		
120	50/60 Hz	1.1	**1373D62G01**	**S1**
240	50/60 Hz	2.1	**1373D62G02**	**S2**
12	Dc	2.8	**1373D62G15**	**S3**
24	Dc	5.7	**1373D62G16**	**S4**
24	60 Hz	–	**1373D62G20**	**S7**

Instruction Leaflet/FRED Number 15550

Note: G-Frame circuit breakers are factory sealed. Underwriters Laboratories, Inc., requires that internal accessories be installed at the factory.

Internal accessories are UL listed for factory installation under E7819.

Where local codes and standards permit and UL listing is not required, internal accessories can be field installed. Accessory installation should be done before the circuit breaker is mounted and connected.

F-Frame

Electrical Rating Data①②③

50/60 Hz			Dc		
Supply Voltage	Minimum Operating Voltage	VA	Supply Voltage	Minimum Operating Voltage	VA
12 24	6.75	75 300	12 24	9	100 400
48 60 110 120 127	36	92 140 480 570 640	48 60	36	100 160
208 220 240 380	156	180 200 240 610	110 120 125 127	77	55 66 71 72
415 440 480 525 550 600	300	130 330 380 450 530 590 –	220 250 – – – – –	– – – – – – –	110 140 – – – – –

Shunt Trip

Voltage Rating (Ac Frequency = 50/60 Hz)	Factory Mounted				Field Mounted	
	Connection Type and Location				Field Installation Kits④	
	18-Inch Pigtail Leads⑤			Terminal Block	Pigtail Leads	Terminal Block
	Same Side	Rear⑥	Opposite Side	Same Side		
	Suffix Number				Catalog Number	
Left-Pole Mounting Ac/Dc Ratings						
12-24 Vac or Vdc	S01	S02	S03	S04	SNT1LP03K	SNT1LT03K
48-127 Vac or 48-60 Vdc⑦	S05	S06	S07	S08	SNT1LP08K	SNT1LT08K
208-380 Vac or 110-127 Vdc	S09	S10	S11	S12	SNT1LP12K	SNT1LT12K
415-600 Vac or 220-250 Vdc	S13	S14	S15	S16	SNT1LP18K	SNT1LT18K
Right- or Neutral-Pole Mounting Ac/Dc Ratings⑧						
12-24 Vac or Vdc	S17	S18	S19	S20	SNT1RP03K	SNT1RT03K⑨
48-127 Vac or 48-60 Vdc⑦	S21	S22	S23	S24	SNT1RP08K	SNT1RT08K⑨
208-380 Vac or 110-127 Vdc	S25	S26	S27	S28	SNT1RP12K	SNT1RT12K⑨
415-600 Vac or 220-250 Vdc	S29	S30	S31	S32	SNT1RP18K	SNT1RT18K⑨

Instruction Leaflet/FRED Number 29C140

Note: F-Frame circuit breakers are factory sealed. Underwriters Laboratories, Inc., requires that internal accessories be installed at the factory.

Internal accessories are UL listed for factory installation under E7819.

Where local codes and standards permit and UL listing is not required, internal accessories can be field installed. Accessory installation should be done before the circuit breaker is mounted and connected.

J-Frame

Electrical Rating Data①②⑩

50/60 Hz			Dc		
Supply Voltage	Minimum Operating Voltage	VA	Supply Voltage	Minimum Operating Voltage	VA
12 24	9	31 173	12 24	8.4	50 247
48 60	36	686 1014	48 60	33.6	1094 1698
110⑪ 120⑪ 127⑪ 208⑪ 220⑪ 240⑪	60.5	66 84 102 354 396 432	110 120 125 – – –	77 – –	112 138 150 – – –
380 400 415 440	285	180 200 240 610	110 120 125 127	154	40 58 – –
480 525 550 600	360	34 42 50 60	– – – –	– – – –	– – – –

Shunt Trip

Voltage Rating (Ac Frequency = 50/60 Hz)	Factory Mounted				Field Mounted	
	Connection Type and Location				Field Installation Kits⑫	
	18-Inch Pigtail Leads			Terminal Block	Pigtail Leads	Terminal Block
	Same Side	Rear⑬	Opposite Side	Same Side		
	Suffix Number				Catalog Number	
Left-Pole Mounting Ac/Dc Ratings⑬						
12-24 Vac or Vdc	S41	S42	S43	S44	SNT2P04K	SNT2T04K
48-60 Vac or Vdc	S49	S50	S51	S52	SNT2P06K	SNT2T06K
110-240 Vac or 110-125 Vdc⑭	S09	S10	S11	S12	SN2LP11K	SNT2T11K
380-440 Vac or 220-250 Vdc	S33	S34	S35	S36	SNT2P14K	SNT2T14K
480-600 Vac	S17	S18	S19	S20	SNT2P18K	SNT2T18K
Right-Pole Mounting Ac/Dc Ratings						
12-24 Vac or Vdc	S45	S46	S47	S48	SNT2P04K	SNT2T04K⑨
48-60 Vac or Vdc	S53	S54	S55	S56	SNT2P06K	SNT2T06K⑨
110-240 Vac or 110-125 Vdc⑭	S29	S30	S31	S32	SNT2P11K	SNT2T11K⑨
380-440 Vac or 220-250 Vdc	S33	S34	S35	S36	SNT2P14K	SNT2T14K⑨
480-600 Vac	S37	S38	S39	S40	SNT2P18K	SNT2T18K⑨

Instruction Leaflet/FRED Number 29C142

① Average unlatching time: 6 milliseconds.
② Average circuit breaker contact total opening time: 18 milliseconds.
③ Endurance: 6000 electrical operations plus 4000 mechanical operations.
④ Not listed with Underwriters Laboratories, Inc., for field installation.
⑤ Pigtail wire size: No. 18 AWG (0.82 mm^2).
⑥ Standard pigtail lead exit location.
⑦ 120 Vac marked suitable for ground fault protection devices.
⑧ Standard mounting location.
⑨ Not for use on 4-pole circuit breakers.
⑩ Endurance – 6000 electrical operations plus 2000 mechanical operations.
⑪ Supply voltages suitable for use with Class 1 GFP devices. Marking label included with accessory kits.
⑫ Listed with Underwriters Laboratories, Inc. for field installation under E64983.
⑬ Standard mounting location – leads exit rear of breaker.
⑭ Suitable for use with Class 1 ground fault sensing element.

K-Frame

Electrical Rating Data①②③

50/60 Hz			Dc		
Supply Voltage	Minimum Operating Voltage	VA	Supply Voltage	Minimum Operating Voltage	VA
12	9	45	12	8.4	35
24		200	24		170
48		830	48		710
60		1280	60		1105
110④	60	100	110	77	110
120④		120	120		130
127④		140	125		140
208④		420	–	–	–
220④		470	–	–	–
240④		550	–	–	–
380	285	95	220	154	41
400		108	250		54
415		120	–		–
440		136	–		–
480	360	40	–	–	–
525		50	–	–	–
550		50	–	–	–
600		70	–	–	–

Shunt Trip

Voltage Rating (Ac Frequency = 50/60 Hz)	Factory Mounted				Field Mounted	
	Connection Type and Location				Field Installation Kits⑤	
	18-Inch Pigtail Leads			Terminal Block	Pigtail Leads	Terminal Block
	Same Side	Rear⑥	Opposite Side	Same Side		
	Suffix Number				Catalog Number	
Left-Pole Mounting Ac/Dc Ratings⑥						
12-24 Vac or Vdc	S41	S42	S43	S44	SNT3P04K	SNT3T04K
48-60 Vac or Vdc	S49	S50	S51	S52	SNT3P06K	SNT3T06K
110-240 Vac or 110-125 Vdc⑦	S09	S10	S11	S12	SN3LP11K	SNT3T11K
380-440 Vac or 220-250 Vdc	S13	S14	S15	S16	SNT3P14K	SNT3T14K
480-600 Vac	S17	S18	S19	S20	SNT3P18K	SNT3T18K
Right-Pole Mounting Ac/Dc Ratings⑧						
12-24 Vac or Vdc	S45	S46	S47	S48	SNT3P04K	SNT3T04K⑨
110-240 Vac or 110-125 Vdc⑦	S29	S30	S31	S32	SNT3P11K	SNT3T11K⑨
380-440 Vac or 220-250 Vdc	S33	S34	S35	S36	SNT3P14K	SNT3T14K⑨
480-600 Vac	S37	S38	S39	S40	SNT3P18K	SNT3T18K⑨

Instruction Leaflet/FRED Number 29C144

L- and M-Frames

Electrical Rating Data①②③

50/60 Hz			Dc		
Supply Voltage	Minimum Operating Voltage	VA	Supply Voltage	Minimum Operating Voltage	VA
12	9	45	12	9	35
24		200	24		170
48	34	830	48	34	710
60		1280	60		1105
110④	60	100	110	77	110
120④		120	120		130
127④		140	125		140
208④		420	–		–
220④		470	–	–	–
240④		550	–	–	–
380	266	95	220	154	41
400		108	250	–	54
415		120	–	–	–
440		136	–	–	–
480	336	40	–	–	–
525		50	–	–	–
550		50	–	–	–
600		70	–	–	–

Shunt Trip

Voltage Rating (Ac Frequency = 50/60 Hz)	Factory Mounted				Field Mounted	
	Connection Type and Location				Field Installation Kits⑤	
	18-Inch Pigtail Leads			Terminal Block	Pigtail Leads	Terminal Block
	Same Side	Rear⑥	Opposite Side	Same Side		
	Suffix Number				Catalog Number	
Left-Pole Mounting Ac/Dc Ratings⑥						
12-24 Vac or Vdc	S01	S02	S03	S04	SNT4LP03K	SNT4LT03K
48-60 Vac	S05	S06	S07	S08	SNT4LP05K	SNT4LT05K
48-60 Vdc	S85	S86	S87	–	SNT4LP23K	SNT4LT23K
110-240 Vac	S09	S10	S11	S12	SNT4LP11K	SNT4LT11K
110-125 Vdc	S41	S42	S43	S44	SNT4LP26K	SNT4LT26K
380-440 Vac or 220-250 Vdc	S13	S14	S15	S16	SNT4LP14K	SNT4LT14K
480-600 Vac	S17	S18	S19	S20	SNT4LP18K	SNT4LT18K
Right-Pole Mounting Ac/Dc Ratings⑩						
12-24 Vac or Vdc	S21	S22	S23	S24	SNT4RP03K	SNT4RT03K
48-60 Vac	S25	S26	S27	S28	SNT4RP05K	SNT4RT05K
48-60 Vdc	S88	S89	S90	–	SNT4RP23K	SNT4RT23K
110-240 Vac	S29	S30	S31	S32	SNT4RP11K	SNT4RT11K
110-125 Vdc	S45	S46	S47	S48	SNT4RP26K	SNT4RT26K
380-440 Vac or 220-250 Vdc	S33	S34	S35	S36	SNT4RP14K	SNT4RT14K
480-600 Vac	S37	S38	S39	S40	SNT4RP18K	SNT4RT18K

Instruction Leaflet/FRED Number 29C146

① Approximate unlatching time – 6 milliseconds.
② Approximate total circuit breaker contact opening time – 18 milliseconds.
③ Endurance – 5,000 electrical operations plus 1,000 mechanical operations.
④ Supply voltages suitable for use with Class 1 GFP devices. Marking label included with accessory kits.
⑤ Listed with Underwriters Laboratories, Inc., for field installation under E64983.
⑥ Standard mounting location – leads exit rear of breaker.
⑦ Suitable for use with Class 1 ground fault sensing element.
⑧ For use with KT (thermal-magnetic) trip units only.
⑨ Not for use on 4-pole circuit breaker.
⑩ For use with LT (thermal-magnetic) 3-pole trip units only.

N-Frame

Electrical Rating Data①②③

50/60 Hz			Dc		
Supply Voltage	Minimum Operating Voltage	VA	Supply Voltage	Minimum Operating Voltage	VA
24	16.8	200	24	16.8	170
48 60	33.6	830 1280	48 60	33.6	710 1150
110④ 120④ 127④ 208④ 220④ 240④	60	100 120 140 420 470 550	110 120 125 – – –	77 – – –	110 130 140 – – –
380 400 415 440	266	95 108 120 136	220 250 – –	154 – – –	41 54 – –
480 525 550 600	336	40 50 50 70	– – – –	– – – –	– – – –

Ordering Information

Shunt Trip

Voltage Rating (Ac Frequency = 50/60 Hz)	Factory Mounted				Field Mounted	
	Connection Type and Location				Field Installation Kits⑤	
	18-Inch Pigtail Leads			Terminal Block	Pigtail Leads	Terminal Block
	Same Side	Rear⑥	Opposite Side	Same Side		
	Suffix Number				Catalog Number	
Left-Pole Mounting Ac/Dc Ratings⑥						
24 Vac or Vdc	S01	S02	S03	S04	SNT5LP03K	SNT5LT03K
48-60 Vac	S05	S06	S07	S08	SNT5LP05K	SNT5LT05K
110-240 Vac④	S09	S10	S11	S12	SNT5LP11K	SNT5LT11K
110-125 Vdc	S41	S42	S43	S44	SNT5LP26K	SNT5LT26K
380-440 Vac or 220-250 Vdc	S13	S14	S15	S16	SNT5LP14K	SNT5LT14K
480-600 Vac	S17	S18	S19	S20	SNT5LP18K	SNT5LT18K
48-60 Vdc	S21	S22	S23	S24	SNT5LP23K	SNT5LT23K

Instruction Leaflet/FRED Number 29C148

① Approximate unlatching time – 6 milliseconds.
② Approximate total circuit breaker contact opening time – 18 milliseconds.
③ Endurance – 3000 electrical operations plus 1000 mechanical operations.
④ Supply voltages suitable for use with Class 1 GFP devices. Marking label included with accessory kits.
⑤ Listed with Underwriters Laboratories, Inc. for field installation under E64983.
⑥ Standard mounting location – leads exit rear of breaker.

R-Frame

Electrical Rating Data

Suffix Number	Application Ratings		Electrical Operating Ratings①②③④⑤⑥						
	Voltage (V)	Frequency (Hz)	Supply Voltage (V)	Minimum Operating Voltage (V)	I_p (A)	I_{rms} at 0.250s (A)	I_{rms} at 0.033s (A)	VA	One Minute Dielectric Withstand Voltage (V)
03/03K	24	50/60	24	16.8	71.1	–	50.3	1210	1050
	24	Dc	24	16.8	–	36.1	–	870	1050
05/05K	48-60	50/60	48 60	34.0	13.1 17.2	–	9.2 12.2	450 740	1120
11/11K⑦	110-240	50/60	110 120 127 208 220 240	60.5	4.2 4.5 4.6 7.9 8.5 8.7	–	3.0 3.2 3.3 5.6 6.0 6.1	330 390 430 1170 1370 1470	1480
14/14K	380-440	50/60	380 415 440	266.0	4.5 5.0 5.3	–	3.2 3.6 3.7	1220 1500 1640	1880
	220-250	Dc	220 250	154.0	–	2.4 2.7	–	530 680	1500
18/18K	480-600	50/60	480 525 550 600	336.0	0.6 0.7 0.7 0.8	–	0.4 0.5 0.5 0.6	200 270 280 360	2200
23/23K	48-60	Dc	48 60	34.0	–	9.8 11.6	–	470 700	1120
26/26K	110-125	Dc	110 120 125	77.0	–	3.3 3.6 3.8	–	370 440 480	1250

Shunt Trip (RH only)

Voltage Rating (Ac Frequency = 50/60 Hz)	Factory Mounted	Field Mounted
	Connection Type and Location	Field Installation Kits⑧
	18-Inch Pigtail Leads⑨	Pigtail Leads
	Suffix Number⑨	Catalog Number⑨
24 Vac or Vdc	**S21**	**SNT6P03K**
48-60 Vac	**S25**	**SNT6P05K**
110-240 Vac	**S29**	**SNT6P11K**
380-440 Vac or 220-250 Vdc	**S33**	**SNT6P14K**
480-600 Vac	**S37**	**SNT6P18K**
48-60 Vdc	**S88**	**SNT6P23K**
110-125 Vdc	**S45**	**SNT6P26K**

Instruction Leaflet/FRED Number 29C150

① Approximate unlatching time of 6 milliseconds.
② Average circuit breaker contact total opening time approximately 62 milliseconds, at rated voltage.
③ Endurance – 500 electrical operations and 2500 mechanical operations.
④ Shunt trip can be operated up to a maximum of six times per minute.
⑤ Maximum operating voltage – 110% of maximum voltage range rating.
⑥ Pigtail wire size – No. 18 AWG (0.82 mm^2). Leads are yellow and white.
⑦ Suitable for use with Class 1 GFP devices; marking label supplied with accessory kit.
⑧ Listed with Underwriters Laboratories, Inc. for field installation under E64983.
⑨ A maximum of two shunt trip plug-in modules may be installed in a circuit breaker.

Low Energy Shunt Trip

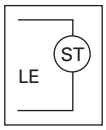

General Information

Low energy shunt trip devices are designed to operate from low energy output signals from dedicated current sensors typically applied in ground fault protection schemes. However, with a proper control voltage source, they may be applied in place of conventional trip devices for special applications. Flux paths surrounding permanent magnets used in the shunt trip assembly hold a charged spring poised in readiness to operate the circuit breaker trip mechanism. When a 100 microfarad capacitor charged to 28 Vdc is discharged through the shunt trip coil, the resultant flux opposes the permanent magnet flux field, which releases the stored energy in the spring to trip the circuit breaker. As the circuit breaker resets, the shunt trip reset arm is actuated by the circuit breaker handle, resetting the shunt trip. The plug-in module is mounted in retaining slots in the top of the trip unit. Coil is intermittent-rated only. Cutoff provisions required in control circuit.

Ordering Information

Select shunt trip catalog number for the voltage within the indicated voltage range. Shunt trip coils are designed to be applied at specific Ac or Dc voltages within the voltage range shown. Electrical ratings are also shown on applicable circuit breaker accessory nameplates.

F-, J-, K-, L-, M-, N-, and R-Frames

Low Energy Shunt Trip①

Mounting Positions	Factory Mounted				Field Mounted	
	Connection Type and Location				Field Installation Kits②	
	18-Inch Pigtail Leads			Terminal Block	Pigtail Leads	Terminal Block
	Same Side	Rear③	Opposite Side	Same Side		
	Suffix Numbers				Catalog Numbers	
F-Frame						
Left Pole	N01	N02	N03	N04	LST1LPK	LST1LTK
Right Pole③	N05	N06	N07	N08	LST1RPK	LST1RTK
Instruction Leaflet/FRED Number 29C141						
J-Frame						
Left Pole③	N01	N02	N03	–	LST2LPK	–
Right Pole	N05	N06	N07	–	LST2RPK	–
Instruction Leaflet/FRED Number 29C143						
K-Frame						
Left Pole③	N01	N02	N03	–	LST3LPK	–
Right Pole④	N05	N06	N07	–	LST3RPK	–
Instruction Leaflet/FRED Number 29C145						
L- and M-Frames						
Left Pole③	N01	N02	N03	–	LST4LPK	–
Right Pole④	N05	N06	N07	–	LST4RPK	–
Instruction Leaflet/FRED Number 29C147						
N-Frame						
Left Pole③	N01	N02	N03	–	LST5LPK	–
Instruction Leaflet/FRED Number 29C149						
R-Frame						
Right Pole	N01	–	–	–	LST6RPK	–
Instruction Leaflet/FRED Number 29C151						

① Cutoff provisions required in control circuit.
② Listed with Underwriters Laboratories, Inc. for field installation under E64983.
③ Standard mounting location – leads exit rear of breaker.
④ For use with thermal-magnetic trip units only.

Undervoltage Release Mechanism

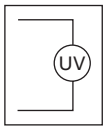

General Information

The undervoltage release mechanism monitors a voltage (typically a line voltage) and trips the circuit breaker when the voltage falls to between 70 and 35 percent of the solenoid coil rating.

The undervoltage release mechanism consists of a continuous rated solenoid with a plunger and tripping lever mounted in a plug-in module. The tab on the tripping lever resets the undervoltage release mechanism when normal voltage has been restored and the circuit breaker handle is moved to the reset (or OFF) position. With less than pickup voltage applied to the undervoltage release mechanism, the circuit breaker contacts will not touch when a closing operation is attempted.

Note: Undervoltage release mechanism accessories are not designed for, and should not be used as, circuit interlocks.

Ordering Information

Select handle reset undervoltage release mechanism catalog number for the voltage within the indicated voltage range. Undervoltage release mechanism coils are designed to be applied at specific Ac or Dc voltages within the voltage range shown. Electrical ratings are shown on applicable circuit breaker accessory nameplates.

G-Frame

Undervoltage Release Mechanism (LH 3-Pole only)

Electrical Ratings			Style Numbers ①②③	Factory Suffix
Volts	Frequency	Amperes		
120	50/60 Hz	0.05	**1373D62G03**	**T1**
24	50/60 Hz	0.22	**1373D62G04**	**T2**
48	50/60 Hz	0.11	**1373D62G05**	**T3**
60	50/60 Hz	0.10	**1373D62G06**	**T4**
110	50 Hz	0.049	**1373D62G07**	**T5**
208	60 Hz	0.026	**1373D62G08**	**T6**
220	50 Hz	0.025	**1373D62G09**	**T7**
240	50/60 Hz	0.024	**1373D62G10**	**T8**
380	50 Hz	0.015	**1373D62G11**	**T9**
415	50 Hz	0.013	**1373D62G12**	**T10**
440	50 Hz	0.012	**1373D62G13**	**T11**
480	60 Hz	0.01	**1373D62G14**	**T12**

Instruction Leaflet/FRED Number 15553

Note: G-frame circuit breakers are factory sealed. Underwriters Laboratories, Inc., requires that internal accessories be installed at the factory.

Internal accessories are UL listed for factory installation under E7819.

Where local codes and standards permit and UL listing is not required, internal accessories can be field installed. Accessory installation should be done before the circuit breaker is mounted and connected.

① Includes 24 inch external pigtail leads, #18 AWG (16-.010).
② A maximum of two internal accessories may be mounted in a three-pole circuit breaker.
③ Suitable for mounting in left pole only of 3-pole breaker.

F-Frame

Note: F-frame circuit breakers are factory sealed. Underwriters Laboratories, Inc., requires that internal accessories be installed at the factory.

Internal accessories are UL listed for factory installation under E7819.

Where local codes and standards permit and UL listing is not required, internal accessories can be field installed. Accessory installation should be done before the circuit breaker is mounted and connected.

Electrical Rating Data①

50/60 Hz					Dc				
Supply Voltage	Dropout Voltage		Pickup Voltage	VA	Supply Voltage	Dropout Voltage		Pickup Voltage	VA
	Min.	Max.	Max.			Min.	Max.	Max.	
12	4.2	6.3	7.6	1.3 2.5	12	4.2	8.4	10.2	2.8
24	8.4	16.8	20.4	1.4	24	8.4	16.8	20.4	1.6
48 60	21.0	33.6	40.8	1.2 1.9	48 60	21.0	33.6	40.8	1.3 2.0
110 120 127	44.5	77.0	93.5	1.3 1.5 1.7	110 120 125	44.5	77.0	93.5	1.5 1.7 1.9
208 220 240	84.0	145.6	176.8	2.2 2.4 2.9	220 250 –	87.5 –	154.0 –	187.0 –	2.6 3.4 –
380 415 440 480	168.0	266.0	323.0	2.9 3.5 3.9 4.6	– – –	– – –	– – –	– – –	– – –
525 550 600	210.0	367.0	446.0	4.3 4.8 5.8	– – –	– – –	– – –	– – –	– – –

Undervoltage Release Mechanism

Voltage Rating (Ac Freq = 50/60 Hz)	Factory Mounted (For F-Frame Breaker and F-Frame HMCP)				Field Mounted (F-Frame Breaker)		Field Mounted (F-Frame Breaker HMCP)	
	Connection Type and Location				Field Installation Kits②			
	18-inch Pigtail Leads			Terminal Block	Pigtail Leads	Terminal Block	Pigtail Leads	Terminal Block
	Same Side	Rear③	Opposite Side	Same Side				
	Suffix Numbers				Catalog Numbers			
Left-Pole Mounting Ac Ratings								
12 Vac	U01	U02	U03	U04	UVH1LP02K	UVH1LT02K	MUVH1LP02K	MUVH1LT02K
24 Vac	U05	U06	U07	U08	UVH1LP03K	UVH1LT03K	MUVH1LP03K	MUVH1LT03K
48 Vac	U37	U38	U39	U40	UVH1LP22K	UVH1LT22K	MUVH1LP22K	MUVH1LT22K
60 Vac	U97	U98	U99	U100	UVH1LP24K	UVH1LT24K	MUVH1LP24K	MUVH1LT24K
110-127 Vac	U13	U14	U15	U16	UVH1LP08K	UVH1LT08K	MUVH1LP08K	MUVH1LT08K
208-240 Vac	U17	U18	U19	U20	UVH1LP11K	UVH1LT11K	MUVH1LP11K	MUVH1LT11K
380-480 Vac	U21	U22	U23	U24	UVH1LP15K	UVH1LT15K	MUVH1LP15K	MUVH1LT15K
525-600 Vac	U25	U26	U27	U28	UVH1LP18K	UVH1LT18K	MUVH1LP18K	MUVH1LT18K
Right-Pole Mounting Ac Ratings④⑤								
12 Vac	U49	U50	U51	U52	UVH1RP02K	UVH1RT02K	MUVH1RP02K	MUVH1RT02K
24 Vac	U53	U54	U55	U56	UVH1RP03K	UVH1RT03K	MUVH1RP03K	MUVH1RT03K
48 Vac	U85	U86	U87	U88	UVH1RP22K	UVH1RT22K	MUVH1RP22K	MUVH1RT22K
60 Vac	U101	U102	U103	U104	UVH1RP24K	UVH1RT24K	MUVH1RP24K	MUVH1RT24K
110-127 Vac	U61	U62	U63	U64	UVH1RP08K	UVH1RT08K	MUVH1RP08K	MUVH1RT08K
208-240 Vac	U65	U66	U67	U68	UVH1RP11K	UVH1RT11K	MUVH1RP11K	MUVH1RT11K
380-480 Vac	U69	U70	U71	U72	UVH1RP15K	UVH1RT15K	MUVH1RP15K	MUVH1RT15K
525-600 Vac	U73	U74	U75	U76	UVH1RP18K	UVH1RT18K	MUVH1RP18K	MUVH1RT18K
Left-Pole Mounting Dc Ratings								
12 Vdc	U29	U30	U31	U32	UVH1LP20K	UVH1LT20K	MUVH1LP20K	MUVH1LT20K
24 Vdc	U33	U34	U35	U36	UVH1LP21K	UVH1LT21K	MUVH1LP21K	MUVH1LT21K
48 Vdc	U37	U38	U39	U40	UVH1LP22K	UVH1LT22K	MUVH1LP22K	MUVH1LT22K
60 Vdc	U97	U98	U99	U100	UVH1LP24K	UVH1LT24K	MUVH1LP24K	MUVH1LT24K
110-127 Vdc	U41	U42	U43	U44	UVH1LP26K	UVH1LT26K	MUVH1LP26K	MUVH1LT26K
220-250 Vdc	U45	U46	U47	U48	UVH1LP28K	UVH1LT28K	MUVH1LP28K	MUVH1LT28K
Right-Pole Mounting Dc Ratings④⑤								
12 Vdc	U77	U78	U79	U80	UVH1RP20K	UVH1RT20K	MUVH1RP20K	MUVH1RT20K
24 Vdc	U81	U82	U83	U84	UVH1RP21K	UVH1RT21K	MUVH1RP21K	MUVH1RT21K
48 Vdc	U85	U86	U87	U88	UVH1RP22K	UVH1RT22K	MUVH1RP22K	MUVH1RT22K
60 Vdc	U101	U102	U103	U104	UVH1RP22K	UVH1RT22K	MUVH1RP22K	MUVH1RT22K
110-127 Vdc	U89	U90	U91	U92	UVH1RP26K	UVH1RT26K	MUVH1RP26K	MUVH1RT26K
220-250 Vdc	U93	U94	U95	U96	UVH1RP28K	UVH1RT28K	MUVH1RP28K	MUVH1RT28K

Instruction Leaflet/FRED Number 29C160 and 29C179 (HMCP)

① Endurance: 6000 electrical operations plus 4000 mechanical operations.

② Not listed with Underwriters Laboratories, Inc., for field installation.

③ Standard pigtail lead exit location.

④ Standard mounting location.

⑤ Not for use on right pole of 4-pole circuit breaker.

J-Frame

Electrical Rating Data ①②

50/60 Hz					Dc				
Supply Voltage	Dropout Voltage		Pickup Voltage	VA	Supply Voltage	Dropout Voltage		Pickup Voltage	VA
	Min.	Max.	Max.			Min.	Max.	Max.	
12	4.2	8.4	10.2	1.9	12	4.2	8.4	10.2	1.6
24	8.4	16.8	20.4	3.9	24	8.4	16.8	20.4	3.1
48 60	21.0	33.6	40.8	2.5 3.8	48 60	21.0	33.6	40.8	2.0 3.1
110 120 127	44.5	77.0	93.5	1.8 2.1 2.4	110 120 125	44.5	77.0	93.5	1.6 1.9 2.2
208 220 240	85.0	145.6	176.8	2.7 3.1 3.8	220 250 –	87.5 –	154.0 –	187.0 –	3.1 4.0 –
380 415 440 480	168.0	266.0	323.0	3.4 4.0 4.6 5.4	– – –	– – –	– – –	– – –	– – –

Undervoltage Release Mechanism

Voltage Rating (Ac Freq = 50/60 Hz)	Factory Mounted				Field Mounted	
	Connection Type and Location				Field Installation Kits③	
	18-inch Pigtail Leads			Terminal Block②	Pigtail Leads	Terminal Block④
	Same Side	Rear③	Opposite Side	Same Side		
	Suffix Numbers				Catalog Numbers	
Left-Pole Mounting Ac Ratings⑤						
12 Vac	U05	U06	U07	U08	UVH2LP02K	UVH2LT02K
24 Vac	U09	U10	U11	U12	UVH2LP03K	UVH2LT03K
48-60 Vac	U13	U14	U15	U16	UVH2LP05K	UVH2LT05K
110-127 Vac	U17	U18	U19	U20	UVH2LP08K	UVH2LT08K
208-240 Vac	U21	U22	U23	U24	UVH2LP11K	UVH2LT11K
380-480 Vac	U25	U26	U27	U28	UVH2LP15K	UVH2LT15K
Right-Pole Mounting Ac Ratings④						
12 Vac	U37	U38	U39	U40	UVH2RP02K	UVH2RT02K
24 Vac	U41	U42	U43	U44	UVH2RP03K	UVH2RT03K
48-60 Vac	U45	U46	U47	U48	UVH2RP05K	UVH2RT05K
110-127 Vac	U49	U50	U51	U52	UVH2RP08K	UVH2RT08K
208-240 Vac	U53	U54	U55	U56	UVH2RP11K	UVH2RT11K
380-480 Vac	U57	U58	U59	U60	UVH2RP15K	UVH2RT15K
Left-Pole Mounting Dc Ratings⑤						
12 Vdc	T01	T02	T03	T04	UVH2LP20K	UVH2LT20K
24 Vdc	T05	T06	T07	T08	UVH2LP21K	UVH2LT21K
48-60 Vdc	T09	U10	T11	T12	UVH2LP23K	UVH2LT23K
110-127 Vdc	T13	T14	T15	T16	UVH2LP26K	UVH2LT26K
220-250 Vdc	T17	T18	T19	T20	UVH2LP28K	UVH2LT28K
Right-Pole Mounting Dc Ratings④						
12 Vdc	T21	T22	T23	T24	UVH2RP20K	UVH2RT20K
24 Vdc	T25	T26	T27	T28	UVH2RP21K	UVH2RT21K
48-60 Vdc	T29	T30	T31	T32	UVH2RP23K	UVH2RT23K
110-127 Vdc	T33	T34	T35	T36	UVH2RP26K	UVH2RT26K
220-250 Vdc	T37	T38	T39	T40	UVH2RP28K	UVH2RT28K

Instruction Leaflet/FRED Number 29C163

① Endurance: 6000 electrical operations plus 2000 mechanical operations.
② For electrical rating data for manual, automatic and electrical reset undervoltage release mechanisms, refer to Cutler-Hammer.
③ Listed with Underwriters Laboratories, Inc. for field installation under E64983.
④ Not for use on right pole of 4-pole circuit breakers.
⑤ Standard mounting location – leads exit rear of breaker.

K-Frame

Electrical Rating Data ①

50/60 Hz					Dc				
Supply Voltage	Dropout Voltage		Pickup Voltage	VA	Supply Voltage	Dropout Voltage		Pickup Voltage	VA
	Min.	Max.	Max.			Min.	Max.	Max.	
12	4.2	8.4	10.2	1.9	12	4.2	8.4	10.2	1.6
24	8.4	16.8	20.4	3.9	24	8.4	16.8	20.4	3.1
48 60	21.0	33.6	40.8	2.5 3.8	48 60	21.0	33.6	40.8	2.0 3.1
110 120 127	44.5	77.0	93.5	1.8 2.1 2.4	110 120 125	44.5	77.0	93.5	1.6 1.9 2.2
208 220 240	85.0	145.6	176.8	2.7 3.1 3.8	220 250 –	87.5 –	154.0 –	187.0 –	3.1 4.0 –
380 415 440 480	168.0	266.0	323.0	3.4 4.0 4.6 5.4	– – –	– – –	– – –	– – –	– – –

Undervoltage Release Mechanism

Voltage Rating (Ac Freq = 50/60 Hz)	Factory Mounted				Field Mounted	
	Connection Type and Location				Field Installation Kits②	
	18-inch Pigtail Leads			Terminal Block	Pigtail Leads	Terminal Block
	Same Side	Rear③	Opposite Side	Same Side		
	Suffix Numbers				Catalog Numbers	
Left-Pole Mounting Ac Ratings③						
12 Vac	U05	U06	U07	U08	UVH3LP02K	UVH3LT02K
24 Vac	U09	U10	U11	U12	UVH3LP03K	UVH3LT03K
48-60 Vac	U13	U14	U15	U16	UVH3LP05K	UVH3LT05K
110-127 Vac	U17	U18	U19	U20	UVH3LP08K	UVH3LT08K
208-240 Vac	U21	U22	U23	U24	UVH3LP11K	UVH3LT11K
380-480 Vac	U25	U26	U27	U28	UVH3LP15K	UVH3LT15K
Right-Pole Mounting Ac Ratings④⑤						
12 Vac	U37	U38	U39	U40	UVH3RP02K	UVH3RT02K
24 Vac	U41	U42	U43	U44	UVH3RP03K	UVH3RT03K
48-60 Vac	U45	U46	U47	U48	UVH3RP05K	UVH3RT05K
110-127 Vac	U49	U50	U51	U52	UVH3RP08K	UVH3RT08K
208-240 Vac	U53	U54	U55	U56	UVH3RP11K	UVH3RT11K
380-480 Vac	U57	U58	U59	U60	UVH3RP15K	UVH3RT15K
Left-Pole Mounting Dc Ratings③						
12 Vdc	T01	T02	T03	T04	UVH3LP20K	UVH3LT20K
24 Vdc	T05	T06	T07	T08	UVH3LP21K	UVH3LT21K
48-60 Vdc	T09	T10	T11	T12	UVH3LP23K	UVH3LT23K
110-127 Vdc	T13	T14	T15	T16	UVH3LP26K	UVH3LT26K
220-250 Vdc	T17	T18	T19	T20	UVH3LP28K	UVH3LT28K
Right-Pole Mounting Dc Ratings④⑤						
12 Vdc	T21	T22	T23	T24	UVH3RP20K	UVH3RT20K
24 Vdc	T25	T26	T27	T28	UVH3RP21K	UVH3RT21K
48-60 Vdc	T29	T30	T31	T32	UVH3RP23K	UVH3RT23K
110-127 Vdc	T33	T34	T35	T36	UVH3RP26K	UVH3RT26K
220-250 Vdc	T37	T38	T39	T40	UVH3RP28K	UVH3RT28K

Instruction Leaflet/FRED Number 29C166

① Endurance: 5,000 electrical operations plus 1,000 mechanical operations
② Listed with Underwriters Laboratories, Inc., for field installation under E64983.
③ Standard mounting location — leads exit rear of breaker.
④ For use with KT (thermal-magnetic) trip units only.
⑤ Not for use on right pole of 4-pole circuit breaker.

L- and M-Frames

Electrical Rating Data ①

50/60 Hz					Dc				
Supply Voltage	Dropout Voltage		Pickup Voltage	VA	Supply Voltage	Dropout Voltage		Pickup Voltage	VA
	Min.	Max.	Max.			Min.	Max.	Max.	
12	4.2	8.4	10.2	1.9	12	4.2	8.4	10.2	1.6
24	8.4	16.8	20.4	3.9	24	8.4	16.8	20.4	3.1
48 60	21.0	33.6	40.8	2.5 3.8	48 60	21.0	33.6	40.8	2.0 3.1
110 120 127	44.5	77.0	93.5	1.8 2.1 2.4	110 120 125	44.5	77.0	93.5	1.6 1.9 2.2
208 220 240	85.0	145.6	176.8	2.7 3.1 3.8	220 250 –	87.5 – –	154.0 – –	187.0 – –	3.1 4.0 –
380 415 440 480	168.0	266.0	323.0	3.4 4.0 4.6 5.4	– – –	– – –	– – –	– – –	– – –

Undervoltage Release Mechanism

Voltage Rating (Ac Freq = 50/60 Hz)	Factory Mounted				Field Mounted	
	Connection Type and Location				Field Installation Kits②	
	18-inch Pigtail Leads			Terminal Block	Pigtail Leads	Terminal Block
	Same Side	Rear③	Opposite Side	Same Side		
	Suffix Numbers				Catalog Numbers	
Left-Pole Mounting Ac Ratings③						
12 Vac	U05	U06	U07	U08	UVH4LP02K	UVH4LT02K
24 Vac	U09	U10	U11	U12	UVH4LP03K	UVH4LT03K
48-60 Vac	U13	U14	U15	U16	UVH4LP05K	UVH4LT05K
110-127 Vac	U17	U18	U19	U20	UVH4LP08K	UVH4LT08K
208-240 Vac	U21	U22	U23	U24	UVH4LP11K	UVH4LT11K
380-480 Vac	U25	U26	U27	U28	UVH4LP15K	UVH4LT15K
Right-Pole Mounting Ac Ratings④⑤						
12 Vac	U37	U38	U39	U40	UVH4RP02K	UVH4RT02K
24 Vac	U41	U42	U43	U44	UVH4RP03K	UVH4RT03K
48-60 Vac	U45	U46	U47	U48	UVH4RP05K	UVH4RT05K
110-127 Vac	U49	U50	U51	U52	UVH4RP08K	UVH4RT08K
208-240 Vac	U53	U54	U55	U56	UVH4RP11K	UVH4RT11K
380-480 Vac	U57	U58	U59	U60	UVH4RP15K	UVH4RT15K
Left-Pole Mounting Dc Ratings③						
12 Vdc	T01	T02	T03	T04	UVH4LP20K	UVH4LT20K
24 Vdc	T05	T06	T07	T08	UVH4LP21K	UVH4LT21K
48-60 Vdc	T09	T10	T11	T12	UVH4LP23K	UVH4LT23K
110-127 Vdc	T13	T14	T15	T16	UVH4LP26K	UVH4LT26K
220-250 Vdc	T17	T18	T19	T20	UVH4LP28K	UVH4LT28K
Right-Pole Mounting Dc Ratings④⑤						
12 Vdc	T21	T22	T23	T24	UVH4RP20K	UVH4RT20K
24 Vdc	T25	T26	T27	T28	UVH4RP21K	UVH4RT21K
48-60 Vdc	T29	T30	T31	T32	UVH4RP23K	UVH4RT23K
110-127 Vdc	T33	T34	T35	T36	UVH4RP26K	UVH4RT26K
220-250 Vdc	T37	T38	T39	T40	UVH4RP28K	UVH4RT28K

Instruction Leaflet/FRED Number 29C170

① Endurance: 5000 electrical operations plus 1000 mechanical operations
② Listed with Underwriters Laboratories, Inc. for field installation under E64983.
③ Standard mounting location — leads exit rear of breaker.
④ For use with LT (thermal-magnetic) trip units only.
⑤ Not for use on right pole of 4-pole circuit breaker.

N-Frame

Electrical Rating Data ①

50/60 Hz					Dc				
Supply Voltage	Dropout Voltage		Pickup Voltage	VA	Supply Voltage	Dropout Voltage		Pickup Voltage	VA
	Min.	Max.	Max.			Min.	Max.	Max.	
12	4.2	8.4	10.2	1.9	12	4.2	8.4	10.2	1.6
24	8.4	16.8	20.4	3.9	24	8.4	16.8	20.4	3.1
48 60	21.0	33.6	40.8	2.5 3.8	48 60	21.0	33.6	40.8	2.0 3.1
110 120 127	44.5	77.0	93.5	1.8 2.1 2.4	110 120 125	44.5	77.0	93.5	1.6 1.9 2.2
208 220 240	84.0	145.6	176.8	2.7 3.1 3.8	220 250	87.5 –	154.0 –	187.0 –	3.1 4.0
380 415 480 500	175.0	266.0	323.0	3.4 4.0 4.6 5.4	– – –	– – –	– – –	– – –	– – –

Undervoltage Release Mechanism

Voltage Rating (Ac Freq = 50/60 Hz)	Factory Mounted				Field Mounted	
	Connection Type and Location				Field Installation Kits②	
	18-inch Pigtail Leads			Terminal Block	Pigtail Leads	Terminal Block
	Same Side	Rear③	Opposite Side	Same Side		
	Suffix Numbers				Catalog Numbers	
Left-Pole Mounting Ac Ratings③						
12 Vac	U05	U06	U07	U08	UVH5LP02K	UVH5LT02K
24 Vac	U09	U10	U11	U12	UVH5LP03K	UVH5LT03K
48-60 Vac	U13	U14	U153	U16	UVH5LP05K	UVH5LT05K
110-127 Vac	U17	U18	U19	U20	UVH5LP08K	UVH5LT08K
208-240 Vac	U21	U22	U23	U24	UVH5LP11K	UVH5LT11K
380-480 Vac	U25	U26	U27	U28	UVH5LP29K	UVH5LT29K
Left-Pole Mounting Dc Ratings③						
12 Vdc	T01	T02	T03	T04	UVH5LP20K	UVH5LT20K
24 Vdc	T05	T06	T07	T08	UVH5LP21K	UVH5LT21K
48-60 Vdc	T09	T10	T11	T12	UVH5LP23K	UVH5LT23K
110-127 Vdc	T13	T14	T15	T16	UVH5LP26K	UVH5LT26K
220-250 Vdc	T17	T18	T19	T20	UVH5LP28K	UVH5LT28K

Instruction Leaflet/FRED Number 29C174

① Endurance: 3000 electrical operations plus 1000 mechanical operations.
③ Listed with Underwriters Laboratories, Inc. for field installation under E64983.
③ Standard mounting location – leads exit rear of breaker.

R-Frame

Ac Undervoltage Release Mechanism (Handle Reset) Ratings①②

Catalog Suffix	Application Ratings	Electrical Operating Ratings				Approximate Operating Time (ms)				
	Voltage (V)	Supply Voltage (V)	Dropout Voltage (V) Min.	Dropout Voltage (V) Max.	Pickup Voltage (V) Max.	VA	Min.③ UVR Response	Initiation④ Circuit Breaker Contact Separation	Maximum Circuit Breaker Contact Opening	Dielectric⑤ Withstand Voltage (V)
02/02K	12	12	4.2	8.4	10.2	2.3	5	46	77	1024
03/03K	24	24	8.4	16.8	20.4	3.1	5	46	77	1048
05/05K	48-60	48 60	21.0	33.5	40.8	3.4 6.0	5	46	77	1120
08/08K	110-127	110 120 127	44.5	77.0	93.5	3.3 3.6 3.8	5	46	77	1254
11/11K	208-240	208 220 240	84.0	145.6	176.8	4.2 6.6 7.2	5	46	77	1480
29/29K	380-500	380 415 440 480 500	168.0	266.0	323.0	3.8 8.3 8.8 9.6 10.0	5	46	77	2000

Dc Undervoltage Release Mechanism (Handle Reset) Ratings①②

Catalog Suffix	Application Ratings	Electrical Operating Ratings				Approximate Operating Time (ms)				
	Voltage (V)	Supply Voltage (V)	Dropout Voltage (V) Min.	Dropout Voltage (V) Max.	Pickup Voltage (V) Max.	VA	Min.③ UVR Response	Initiation④ Circuit Breaker Contact Separation	Maximum Circuit Breaker Contact Opening	Dielectric⑤ Withstand Voltage (V)
20/20K	12	12	4.2	8.4	10.2	3.4	5	46	77	1024
21/21K	24	24	8.4	16.8	20.4	4.3	5	46	77	1048
23/23K	48-60	48 60	21.0	33.5	40.8	4.8 7.2	5	46	77	1120
26/26K	110-127	110 120 125	43.8	77.0	93.5	3.3 3.6 3.8	5	46	77	1250
28/28K	220-250	220 250	87.5	154.0	187.0	6.6 7.5	5	46	77	1500

Undervoltage Release Mechanism (RH only)

Voltage Rating (Ac Freq = 50/60 Hz)	Factory Mounted	Field Mounted
	Connection Type and Location	Field Installation Kits①
	18-inch Pigtail Leads	Pigtail Leads
	Suffix Numbers②	Catalog Numbers②
12 Vac	**U37**	**UVH6RP02K**
24 Vac	**U41**	**UVH6RP03K**
48-60 Vac	**U45**	**UVH6RP05K**
110-127 Vac	**U49**	**UVH6RP08K**
208-240 Vac	**U53**	**UVH6RP11K**
380-500 Vac	**U57**	**UVH6RP29K**
12 Vdc	**T21**	**UVH6RP20K**
24 Vdc	**T25**	**UVH6RP21K**
48-60 Vdc	**T29**	**UVH6RP23K**
110-125 Vdc	**T33**	**UVH6RP26K**
220-250 Vdc	**T37**	**UVH6RP28K**

Instruction Leaflet/FRED Number 29C178

① Endurance – 500 electrical operations plus 2500 mechanical operations.
② Pigtail wire size – No. 18 AWG (0.82 mm^2). Leads are orange and brown.
③ UVR will override a momentary voltage dip up to the response time shown.
④ Unlatching occurs 1 millisecond before circuit breaker contacts begin to separate.
⑤ For 1 minute.

Accessory Terminal Block (R-Frame)

(For Fixed Mounted Configuration)

General Information

Internal accessory wiring leads are normally supplied with pigtail leads (No. 18 AWG) that exit from the right side of the circuit breaker. Where specified, fixed mounted accessory terminal blocks are available. A maximum of one 24-point terminal block can be installed on the right side of the circuit breaker for the internal accessories.

For convenience in determining the appropriate number of terminal block points required, refer to table at right.

Number of Control Wires For Each Internally Mounted Accessories

Type of Accessory	Number of Contacts Per Single Accessory	Required Number of Wires
Auxiliary Switch	2a/2b 4a/4b	6 12
Alarm (Signal)/ Lockout Switch	1m/1b 2m/2b	6 12
Shunt Trip	N/A	2
Low Energy Shunt	N/A	2
Undervoltage Release Mechanism	N/A	2

Ordering Information①

Factory Installed	Field Mounted
Suffix Number	Catalog Number
Q01	TBRDK

Instruction Leaflet/FRED Number 29C312

Cutler-Hammer PowerNet Communications Kit (OPTIM 550 only) K-, L-, and N-Frames

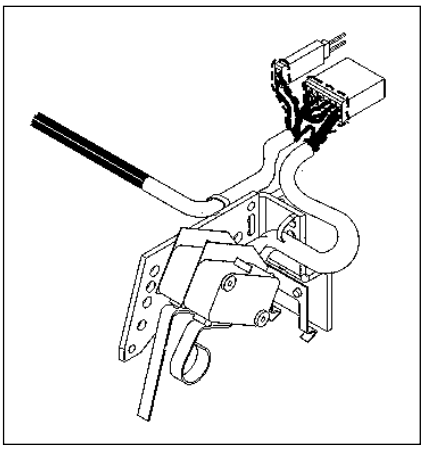

General Information

The Cutler-Hammer PowerNet Communications Kit can be ordered to add Cutler-Hammer PowerNet communications to an existing OPTIM 550 breaker in the field. An 18-inch wiring pigtail is routed to the rear of the breaker: two wires for Cutler-Hammer PowerNet and two wires for 24V Dc (45 mA load). It is recommended that the power supply be an “isolated high quality” unit.

Ordering Information

Cutler-Hammer PowerNet Communications Kit

Circuit Breaker	Catalog Numbers
K-Frame	ICK550K
L-Frame	ICK550L
N-Frame	ICK550N

Instruction Leaflet/FRED Number 29C506, 29C897, 29C898

① One 24-point accessory terminal block provided with circuit breaker when ordered factory installed or shipped from warehouse as separate item when ordered for field installation. See Digitrip RMS master connection diagram (IL 29C714).

Endcap Kit

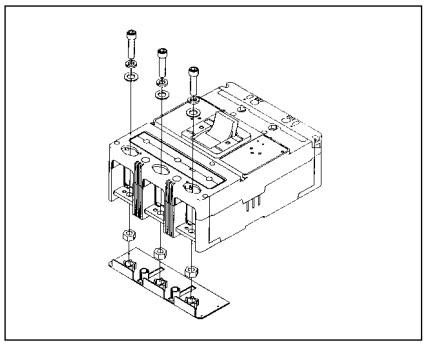

The endcap kit slides onto the line or load conductor of the circuit breaker and acts as a threaded adapter for the conductor to accept a ring terminal or other bolt-on connector. The endcap kit is available with English and metric thread sizes. Screws and washers are supplied by customer. (Field installation only.) Listed per UL File E7819.

Ordering Information

Thread Type	Thread Size	Catalog Number Package of 12 (Priced Individually)
F-Frame		
Imperial Metric	10-32 M-5	**KPEK1** **KPEK1M**
J-Frame		
Imperial Metric	10-32 M-5	**KPEK2** **KPEK2M**
K-Frame		
Imperial Metric	10-32 M-5	**KPEK3** **KPEK3M**
L-Frame		
Imperial Metric	10-32 M-5	**KPEK4** **KPEK4M**

Keeper Nut

The keeper nut slides onto the line or load conductor of the circuit breaker and acts as a threaded adapter for the conductor to accept a ring terminal or other bolt-on connector. The keeper nut is available with English and metric thread sizes. Screws and washers are supplied by customer. (Field installation only.) Listed per UL File E7819.

Ordering Information

F-Frame

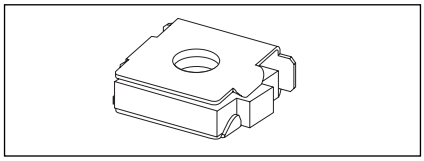

Thread Type	Thread Size	Catalog Number Package of 12 (Priced Individually)
Imperial Metric	10-32 M-5	**KPR1A** **KPR1AM**

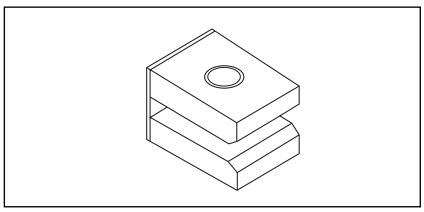

K-Frame

Thread Type	Thread Size	Line/ Load End	Catalog Number Package of 3
Imperial	.375-16	Line Load	**KPR3A** **KPR3B**
Metric	M-8	Line Load	**KPR3AM** **KPR3BM**

L-, M-, N-Frames

Not required. Terminals are threaded.

Plug Nut

J-Frame

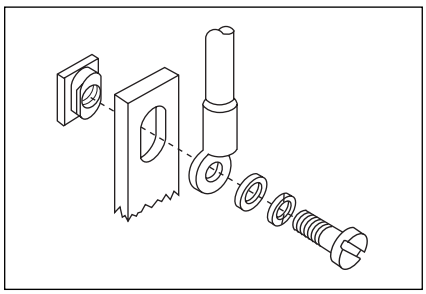

The plug nut is used in applications where screw-connected ring-type terminals are preferred to connect cables to circuit breaker conductors. The plug nut is press-fit into the opening in the circuit breaker terminal conductor. Screws and washers are supplied by customer.

Ordering Information

Thread Type	Thread Size	Catalog Number Package of 6
Imperial Metric	.250-20 M-6	**PLN2** **PLN2M**

Control Wire Terminal Kit

F-Frame

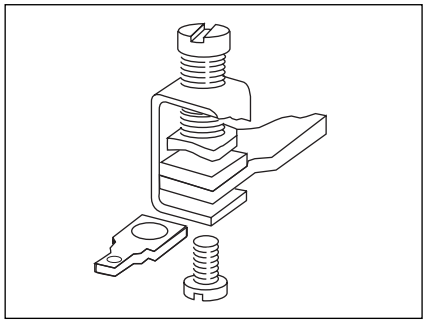

The control wire terminal kit provides a means to tap off control power from a main disconnect using the provided male end of a quick disconnect.

For use with steel or stainless steel① terminals only.

Ordering Information

Package of 12 control wire terminal tangs. Terminals must be ordered separately. Priced individually.

Catalog Number
FCWTK

J- and K-Frames

Not for use with T250KB terminals.

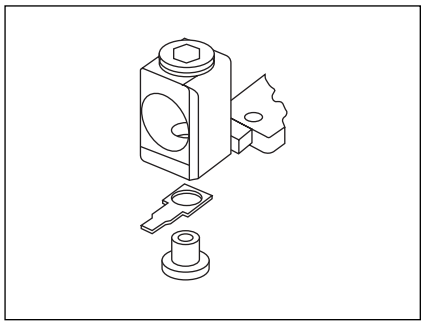

Ordering Information

Package of 12 control wire terminal tangs. Terminals must be ordered separately. Priced individually.

Catalog Number
KCWTK

L-Frame

AWG Wire Range/Number Conductors	Metric Wire Range mm²	Catalog Number
Al/Cu (2) 250 – 350 kcmil	120-150	**TA602LDCW②**
Cu (2) 3/0 – 350 kcmil	120-150	**T602LDCW②**
Al/Cu (2) 400 – 500 kcmil	185-240	**2TA603LDCW①** 2-Pole Kit
Al/Cu (2) 400 – 500 kcmil	185-240	**3TA603LDCW①** 3-Pole Kit
Al/Cu (2) 400 – 500 kcmil	185-240	**4TA603LDCW①** 4-Pole Kit

Multi-Wire Connectors

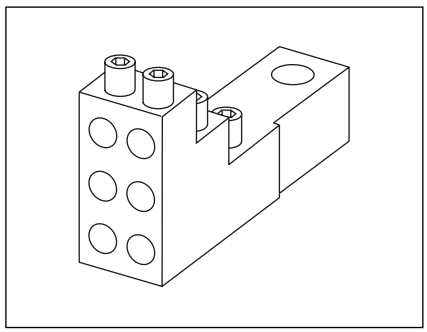

Field-installed multi-wire connectors for the load side (OFF) end terminals. They are used to distribute the load from the circuit breaker to multiple devices without the use of separate distribution terminal blocks.

Multi-wire lug kits include mounting hardware, insulators and tin-plated aluminum connectors to replace three mechanical load lugs. UL listed for copper only as used on the load side (OFF) end.

Ordering Information

Package of 3.

Maximum Amperes	Wires Per Terminal	Wire Size Range AWG Cu	Kit Catalog Number
F-Frame			
225	3	#14-2	**3TA150F3K**
225	6	#14-6	**3TA150F6K**
J-Frame			
225	3	#14-2	**3TA250J3K**
225	6	#14-6	**3TA250J6K**
K-Frame			
400	3	#12-2/0	**3TA400K3K**
400	6	#14-2/0	**3TA400K6K**

① Terminal kits contain one terminal for each pole and one terminal cover.
② Individually packed.

Base Mounting Hardware

Ordering Information

Hardware for surface mounting of circuit breakers is supplied only on request. Hardware consists of mounting screws and lockwashers. Order hardware for circuit breaker pole configurations as required.

Screw Length	Style Number
G-Frame	
2.625 (66.7 mm) 3.000 (76.2 mm)	**624B375G23** **8703C80G05**

Imperial Thread / **Metric Thread**

Number of Poles	Description	Type of Mounting	Style / Catalog Number		Number of Poles	Description	Type of Mounting	Style / Catalog Number
F-Frame								
1	.164-32 x 3.188 inch Pan-Head Steel Screws, Lockwashers, and Clamps	Individual Group (one set of hardware for two circuit breakers)	**624B375G01** **624B375G02**		1	M4 - 0.7 x 80 mm Pan-Head Steel Screws, Lock-washers, and Clamps	Individual Group (one set of hardware for two circuit breakers)	**4218B80G09** **4218B80G10**
2	.164-32 x 1.5 inch Pan-Head Steel Screws and Lock-washers	Individual	**4218B80G01**		2	M4 - 0.7 x 38 mm Pan-Head Steel Screws and Lockwashers	Individual	**4218B80G11**
3, 4	.164-32 x 1.5 inch Pan-Head Steel Screws and Lock-washers	Individual	**BMH1**		3, 4	M4 - 0.7 x 38 mm Pan-Head Steel Screws and Lockwashers	Individual	**BMH1M**
J-Frame								
2, 3, 4	0.250-20 x 2.75 inch Pan-Head Steel Screws and Lockwashers	Individual	**BMH2**		2, 3, 4	M6 – 0.7 x 70mm Pan-Head Steel Screws and Lockwashers	Individual	**BMH2M**
K-Frame								
2, 3, 4	0.250-20 x 1.5 inch Pan-Head Steel Screws and Lockwashers	Individual	**BMH3**		2, 3, 4	M6 – 0.7 x 38mm Pan-Head Steel Screws and Lockwashers	Individual	**BMH3M**
L-Frame								
2, 3, 4	0.250-20 x 1.5 inch Filister-Head Steel Screws and Lockwashers and Flat Washers	Individual	**BMH4**		2, 3	–	Individual	**BMH4M**
M-Frame								
2, 3	0.3125-18 x 1.25 inch Filster-Head Steel Screws and Lockwashers and Flat Washers	Individual	**BMH5**		2, 3	–	Individual	**BMH5M**
N-Frame								
2, 3, 4	0.3125-18 x 1.25 inch Pan-Head Steel Screws and Lock-washers		**BMH5**		2, 3	–	Individual	**BMH5M**
R-Frame								
Supplied by customer								

Drawout Cassette

The drawout cassette is currently for use with the standard 3-pole 65 kA/480 Vac, 1600A and 2000A RD circuit breakers only. It consists of two separate components: the movable mechanism which is factory mounted to the circuit breaker frame (shown in figure) and the stationary mechanism which is housed in the cassette and shipped separately.

The drawout mechanism has four positions.

- Connected – The breaker is fully connected to the primary stabs and secondary contacts.
- Test – The breaker is not connected to the primary stab but is connected to the secondary contacts.
- Disconnected – Both the primary stabs and the secondary contacts are disconnected.
- Withdraw – The breaker can be removed from the cassette.

Ordering Information

RD Drawout Cassette

65 kA/480 Vac version

Description	Catalog Number
Movable Mechanism	**RD20DOM**
Stationary Mechanism	**RD20DOS** (without shutters) **RD20DOSS** (with shutters)

Instruction Leaflet/FRED Number 32697

Note: Movable mechanism must be ordered with RD or RDC circuit breaker and is shipped mounted to circuit breaker frame. Stationary mechanism is ordered separately.

All internal accessories must be factory installed for use with drawout.

RD Drawout Cassette

100 kA/480 Vac version

Description	Catalog Number
Movable Mechanism	**RD20DOM**
Stationary Mechanism	**RD20DOS** (without shutters) **RD20DOSS** (with shutters)

Instruction Leaflet/FRED Number 32697

Terminal Shields

Terminal shields provide protection against accidental contact with live line side terminations. Terminal shields are fabricated from high dielectric insulating material and fasten over the front terminal access openings. Small openings in the shields provide limited access to the terminals for tightening connectors. (Field installation only.)

Ordering Information

G-Frame

Terminal Shield

Number Units in Package	Style Number
10	GTSK3

J-Frame

Number of Poles	Location	Style Number (Package of 10)
2, 3 4	Line End	1266C07G01 6631C01G01
2, 3 4	Load End	6641C16G01 6641C16G02

L-Frame

Style Number (Package of 1)
314CA420G01

F-Frame

Number of Poles	Location	Style Number	
		Standard (Package of 10) (Priced Individually)	Special - For use when electrical operator is mounted on circuit breaker
1	Line	625B229G06	–
2		625B229G07	–
3		625B229G08	4210B95G01
4		625B229G09	4210B95G02

K-Frame

Number of Poles	Location	Catalog Number (Package of 10)
2, 3	Line	TS33LN
4	Line	TS34LN
3	Load	TS33LD

M-Frame

Style Number (Package of 1)
4203B20G01

Terminal End Covers

F-Frame

The terminal end covers are designed for use in motor control center applications where, because of confined spaces, line side conductors are normally custom fitted. The molded end covers are made of high dielectric glass-polyester and slide over the line ends of the circuit breaker. Close fitting conductor openings are molded into the end covers. The end cover and circuit breaker case fit together to form terminal compartments that isolate discharged ionizing gases during circuit breaker tripping. Terminal end covers are available with two conductor opening diameters, 0.25 and 0.41 inch, and are listed per UL File E7819. (Field installation only.)

Ordering Information

The terminal end cover is available for 3-pole circuit breakers only. Two conductor opening sizes are available. Specify quantity (one per circuit breaker) when ordering.

Conductor Opening Diameter (Inches)	Catalog Number
0.25 (6.35 mm)	TEC1
0.41 (10.41 mm)	TEC2

Interphase Barriers

The interphase barriers provide additional electrical clearance between circuit breaker poles for special termination applications. The barriers are high dielectric insulating plates that are installed in the molded slots between the terminals. (Field installation only.) Two per package.

Frame	Catalog Number
F	IPB1
J	IPB2
K	IPB3
L	IPB4
M	IPB4
N	IPB5

Base Mounting Plate①
G-Frame GD/GC/GHC

Ordering Information

Number Units in Package	Style Number
1	**207B513G01**

DIN Rail Adapter②③
G-Frame GD/GC/GHC

Ordering Information

Number Units in Package	Style Number
10	**1225C79G01**
10	**1225C79G02④**

Instruction Leaflet/FRED Number 29C091

Key Operated Attachment
G-Frame GD/GC/GHC

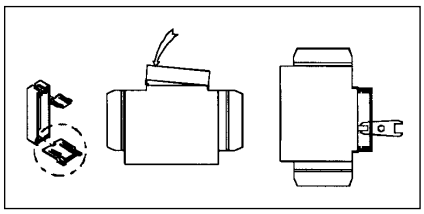

Ordering Information

Number Units in Package	Style Number
10	**GK0A**

Instruction Leaflet/FRED Number 29C090

① Suitable for mounting (6) single-pole circuit breakers.
② For use with standard 35 mm DIN Rail such as, 35 x 7.5 or 35 x 15 mm per DIN EN50022.
③ Adapter mounting screws included are for use with 2- and 3-pole circuit breakers. Adapters for 1-pole circuit breakers clip into the base molding.
④ For use on 3-pole breakers only.

Lock Dog (non-padlockable) G-Frame GD/GC/GHC/GB/GHB/GMCP

Ordering Information

Number Units in Package	Style Number
1	1294C01H01

Non-Padlockable Handle Block

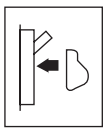

The nonlockable handle block secures the circuit breaker handle in either the ON or OFF position. (Trip-free operation allows the circuit breaker to trip when the handle block holds the circuit breaker handle in the ON position.) The device is positioned over the circuit breaker handle and secured by a setscrew to deter accidental operation of the circuit breaker handle. Listed per UL File E7819. (Field installation only.)

Ordering Information

Frame	Catalog Number
F	LKD1
J, K	LKD3
L, M, N	LKD4

Padlockable Handle G-Frame GD/GC/GHC/GB/GHB

Ordering Information

Number Units in Package	Style Number
10	1223C77G03

(Accepts .285 Lock Shank)

Padlockable Handle Block

The device is positioned in the cover opening to prevent handle movement. Will accommodate one 5/16 padlock.

Ordering Information

Frame	Catalog Number
J, K	PHB3

Snap-On Padlockable Handle Lock Hasp

The snap-on padlockable handle lock allows the handle to be locked in the OFF or ON position. (Trip-free operation allows the circuit breaker to trip when the handle lock holds the circuit breaker handle in the ON position.) This device was designed for use on the 1-pole circuit breaker, but may be used on 1-, 2-, 3-, and 4-pole styles. The handle lock snaps onto the escutcheon area of the handle with an optional retaining screw for added secureness. The handle lock will accommodate one padlock with a 1/4-inch (6 mm) shackle. Listed per UL File E7819. (Field installation only.)

Ordering Information

Frame	Catalog Number
F	PHB1

Padlockable Handle Lock Hasp

The padlockable handle lock hasp allows the handle to be locked in the ON or OFF position. (Trip-free operation allows the circuit breaker to trip when the handle lock holds the circuit breaker handle in the ON position.) The hasp mounts on the circuit breaker cover within the trimline. The cover is predrilled on both sides of the operating handle so that the hasp can be mounted on either side of the handle. The hasp will accommodate up to three padlocks with 1/4-inch (6 mm) shackles. Listed per UL File E7819. (Field installation only.)

The padlockable handle lock can be mounted on either side of the operating handle. One per circuit breaker. (Field installation only.)

Ordering Information

Description	Catalog Number
F-Frame	
1-pole breakers	**PHL1**
2-, 3-, 4-pole breakers	**PLK1**

Instruction Leaflet/FRED Number 29C230

J, K-Frames	
2-, 3-, 4-pole breakers	**PLK3**
For Left Side Mounting	**PLK3LOFF**①
For Right Side Mounting	**PLK3ROFF**①

Instruction Leaflet/FRED Number 29C232

L-Frame	
Side Mounted	
Lock On or Off	**HLK4**
Lock Off Only (Left-Hand Mount)	**HLK4LOFF**①

Instruction Leaflet/FRED Number 29C234

Top Mounted	
Lock On or Off	**HLK4S**
Lock Off Only	**HLK4SOFF**①

Instruction Leaflet/FRED Number 29C234C

M-Frame	
Lock On or Off	**HLK4**
Lock Off Only (Left-Hand Mount)	**HLK4LOFF**①

Instruction Leaflet/FRED Number 29C234

Vertical Mounting	
Lock On/Off	**HLK45**
Lock Off Only	**HLK45OFF**

Instruction Leaflet/FRED Number 29C234C

N-Frame	
Side Mounted	**PLK5**

Instruction Leaflet/FRED Number 29C234

Top Mounted (On/Off)	**PLK5S**
Top Mounted (Off Only)	**PLK5SOFF**①

Instruction Leaflet/FRED Number 29C234C

R-Frame	
Lock On/Off	**HLK6**
Lock Off Only	**HLK6OFF**①

Instruction Leaflet/FRED Number 29C240

① For padlockable handle lock hasp to padlock handle in OFF position only order either catalog number.

Cylinder Lock

The cylinder lock internally blocks the trip bar in the tripped position to prevent the circuit breaker from being switched to ON. The cylinder lock is factory installed in the circuit breaker cover. Other internally mounted accessories cannot be installed in the same pole as the cylinder lock. (Factory installation only.)

The cylinder lock is factory installed in the left pole only of the circuit breaker cover. Internal accessories cannot be installed in the same pole as the cylinder lock.

Ordering Information

Frames	Catalog Number
F, J, K	Order by description

Key Interlock Kit
(Lock Not Included)

The key interlock is used to externally lock the circuit breaker handle in the OFF position. When the key interlock is locked, an extended deadbolt blocks movement of the circuit breaker handle. Uniquely coded keys are removable only with the deadbolt extended. Each coded key controls a group of circuit breakers for a given specific customer installation.

The key interlock assembly is Underwriters Laboratories, Inc., listed for field installation under UL file E7819 and consists of a mounting kit and a purchaser supplied deadbolt lock. The mounting kit comprises a mounting plate, which is secured to the circuit breaker cover in either the left- or right-pole position, key interlock mounting screws, and a wire seal. Specific mounting kits are required for individual key interlock types.

Ordering Information

Key interlock mounting kits are for field installation only. Select mounting kit catalog numbers to match type of lock used. Key interlocks are supplied by customer.

Lock Manufacturer	Lock Type	Bolt Projection in Withdrawn Position	Kit Catalog Number
F-Frame			
Superior	B-4003-1	3/8 inch	**KYK1**
Kirk	F	3/8 inch	
Square D	SF	None	
Federal Pioneer	VF	3/8 inch	
Castell	K or QK	3/8 inch	**CTK1**

Instruction Leaflet/FRED Number 29C231

J-, K-Frames			
Superior	B-4003-1	3/8 inch	**KYK3**
Kirk	F	3/8 inch	
Square D	SF	None	
Federal Pioneer	VF	3/8 inch	
Castell	K or QK	3/8 inch	

Instruction Leaflet/FRED Number 29C233

L-, M-, N-Frames			
Superior	B-4003-1	3/8 inch	**KYK4**
Kirk	F	3/8 inch	
Square D	SF	None	
Federal Pioneer	VF	3/8 inch	
Castell	K or QK	3/8 inch	**CTK4**

Instruction Leaflet/FRED Number 29C235

R-Frame			
Superior	B-4003-1	1 inch	**KYK6**
Kirk	F	1 inch	
Square D	SF	1 inch	
Federal Pioneer	VF	1 inch	
Castell	K or QK	1 inch	**CTK6**

Instruction Leaflet/FRED Number 29C240

Sliding Bar Interlock

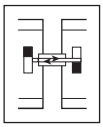

The sliding bar interlock provides mechanical interlocking between two adjacent 3-pole circuit breakers. It is installed on the enclosure cover between the circuit breakers. When the sliding bar interlock handle is moved from one side to the other, a bar extends to alternately block movement of the circuit breaker handles and prevents both circuit breakers from being switched to ON at the same time. Sliding bar interlocks are not UL listed. (Field installation only.)

Ordering Information

The sliding bar interlock is available for mounting between two adjacent 3-pole circuit breakers with circuit breakers centerline spacing as indicated in table and enclosure front panel thickness of 1/8 or 3/16 inch. (For field installation only.)

Frame	Centerline Spacing (inches)	Catalog Number	Instruction Leaflet/ FRED Number
F	4-3/16	**SBK1**	29C310
J	4-3/8	**SBK2**	29C310
K	5-3/4	**SBK3**	29C310
L, M	8-1/2	**SBK4**	29C311
N	8-1/2	**SBK5**	46A8396

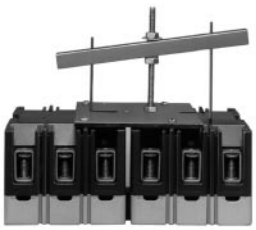

Walking Beam Interlock

The walking beam interlock provides mechanical interlocking between two adjacent circuit breakers of the same pole configuration. The walking beam interlock mounts on a bracket behind and between the circuit breakers. A plunger on each end of the beam is inserted through an access hole in the back plate and base of each circuit breaker. The walking beam interlock prevents both circuit breakers from being switched ON at the same time. If a walking beam interlock is installed, the wiring troughs in the back of the circuit breaker case are blocked by the plungers and cannot be used for cross wiring. Factory modified circuit breakers are required for this application. UL File E3816.

Ordering Information

The walking beam interlock is available for mounting between two adjacent circuit breakers spaced 1/4-inch apart and having the same pole configuration. The two circuit breakers must be factory modified to accept the walking beam interlock assembly (suitable for use with either 2-, 3-, or 4-pole circuit breakers). With properly modified circuit breakers, the walking beam interlock is suitable for field installation. Order circuit breakers specifying modification for walking beam and select walking beam interlock from table on this page. Circuit breakers and walking beam interlock are boxed and shipped separately.

Frame	Catalog Number	Instruction Leaflet/ FRED Number
F	**WBL1**	29C300
K	**WBL3**	29C301
L, M	**WBL4**	29C302
N	**WBL5**	29C303
R	**WBL6**	29C304

Electrical Operator①

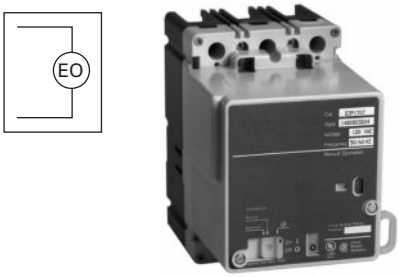

The electrical (solenoid) operator is a single solenoid mechanism that enables local and remote circuit breaker ON, OFF, and reset switching. The electrical operator is mounted on the circuit breaker cover within the trimline of the circuit breaker. The electrical operator uses a unique bistable latch that allows the device to operate using one solenoid. The accessory provides high-speed switching with a maximum operating time of 5 cycles (80 ms) making it suitable for generator synchronizing applications.

Means are provided for remote electrical operation and for local manual operation. A special slide includes provisions for padlocking the circuit breaker handle in the OFF position. The slide will accept three padlock shackles with a maximum diameter of 1/4-inch (6 mm) each. An interlock electrically disconnects the solenoid when the electrical operator cover is removed. The above table provides electrical rating data for the electrical (solenoid) operator.

The electrical (solenoid) operator is Underwriters Laboratories, Inc., listed as a circuit breaker accessory under UL File E64983.

① The electrical operator design is endurance tested for 10,000 electrical operations.
② Use current-limiting type fuse where required.
③ Tolerance: +10%, –15% of nominal voltage.
④ Tolerance: ±10% of nominal voltage.
⑤ Underwriters laboratories listed under UL file E64983.
⑥ The electrical operator design has been endurance tested for 6,000 electrical operations.
⑦ Frequency: 50/60 Hz.
⑧ Maximum operating time: 5 cycles (80 ms).

Ordering Information

F-Frame

Electrical Rating Data②

Voltage	Frequency	Inrush Current Amperes	Maximum Operating Time	Fuse③ Amperes
120④ 240④	50/60 Hz Ac	10 5	5 cycles (80 ms)	3 2
120⑤ 240⑤	Dc Dc	14 8	5 cycles (80 ms)	3-5 2-3

Electrical Operator

Voltage	Frequency	Terminal Block	18-Inch Pigtail Lead
		Catalog Number	
120 240	Ac	**EOP1T07** **EOP1T11**	**EOP1P07** **EOP1P11**
120 240	Dc	**EOP1T07DC** **EOP1T11DC**	**EOP1P07DC** **EOP1P11DC**

Instruction Leaflet/FRED Number 29C200 (AC); 29C210 (DC)

J-Frame

Electrical Rating Data ⑤⑥⑦⑧

Voltage (V)③	Inrush Current (A)	Fuse (A)
120 240	24 12	6 4

Electrical Operator

Operating Voltage	Frequency	Terminal Block
		Catalog Number
120 240	50/60 Hz Ac	**EOP2T07** **EOP2T11**
120 240	Dc	**EOP2T07DC** **EOP2T11DC**

Instruction Leaflet/FRED Number 29C202 (AC); 29C211 (DC)

K-Frame

Electrical Rating Data ⑤⑥⑦⑧

Voltage (V)③	Inrush Current (A)	Fuse (A)
120 240	24 12	6 4

Electrical Operator

Operating Voltage	Frequency	Terminal Block
		Catalog Number
120 240	50/60 Hz Ac	**EOP3T07** **EOP3T11**
120 240	Dc	**EOP3T07DC** **EOP3T11DC**

Instruction Leaflet/FRED Number 29C202 (AC); 29C211 (DC)

The motor operator allows the circuit's breaker to be opened, closed, or reset remotely. It also has a lock-off capability and provisions for manual operation.

The motor operator contains a reversible motor connected to a ball screw. The ball screw drives the circuit breaker handle. Limit switches and relays are used to control the motor.

The motor operator is UL listed as a recognized component suitable for field installation on all type L-frame circuit breakers and molded case switches under UL File E64124.

From the point of energization of the closing mechanism at 85% voltage, the closing time is 30 cycles ± 10%.

Ordering Information

L- and M-Frames

Electrical Rating Data ①②③④

Voltage (V)⑤	Inrush Current (A)
120 Ac 208 240	8 5 4
125 Dc 24	9 27

Instruction Leaflet/FRED Number 29C203

Electrical Operator

Operating Voltage	Frequency	Terminal Block Catalog Number
120 208 240 480	50/60 Hz	**EOPM4T07** **EOPM4T11** **EOPM4T11A** **EOPM4T15**
125 24	Dc	**EOPM4T26** **EOPM4T21**

N-Frame

Electrical Rating Data ①③⑥⑦

Voltage (V)⑤	Frequency	Inrush Current (A)	Fuse (A)
120 208 240 480	50/60 Hz	25 21 19	6 4
48 125	Dc	80 13	

Instruction Leaflet/FRED Number 29C204

Electrical Operator

Operating Voltage	Frequency	Pigtail Leads Catalog Number
120 208 240 480	50/60 Hz	**EOP5T07** **EOP5T09** **EOP5T11** **EOP5T15**
48 125	Dc	**EOP5T22** **EOP5T26**

R-Frame

Available Motor Operator Ratings and Operating Conditions⑧⑨⑩⑪

Rating Voltage (V)⑫	Frequency	Motor Inrush Current (A)
120 240 48	50/60 Hz 50/60 Hz Dc	40 27 53

Instruction Leaflet/FRED Number 29C205

Electrical Operator

Operating Voltage	Frequency	Factory Installed Terminal Block Catalog Number
120 240 48	50/60 Hz 50/60 Hz Dc	**EOP6T08K** **EOP6T11K** **EOP6T21K**

① Underwriters Laboratories Inc. listed under UL File E64983.
② The electrical operator design has been endurance tested for 6,000 electrical operations.
③ Frequency: 50/60 Hz.
④ Maximum operating time: 5 cycles (80 ms).
⑤ Tolerance: +10%, –15% of nominal voltage.
⑥ The electrical operator design has been endurance tested for 2,500 electrical operations.
⑦ Maximum operating time: 12 cycles max. Operator is an intemittent duty device. The safe duty cycle (OFF to ON to OFF) should not exceed one per minute.
⑧ Operator is an intermittent duty service. The safe duty cycle (OFF to ON to OFF) should not exceed one per minute.
⑨ Electric Operating time at rated voltage;
(a) To turn breaker ON – 1/2 second max.
(b) To turn breaker OFF – 1/2 second max.
⑩ Motor operating temperature; Class "A" temperature limits apply.
⑪ A minimum 1 kVA power source is recommended for motor operation.
⑫ Applied voltage should be no less than 85% or no more than 110% of rated.

Plug-in Adapters

Plug-in adapters simplify installation and front removal of circuit breakers. Individual line and load plug-in adapters are available for rear connection applications on 2-, 3-, and 4-pole circuit breakers. Common mounting plates for line- and load-end adapters are available.

Ordering Information

F-Frame

Continuous Current Rating (Amperes)	2-Pole	3-Pole	4-Pole
	Style Number		
100 150-225	507C036G13 507C036G14	507C036G15 507C036G16	179C968G03 179C968G04
Mounting Plate	176C511H01	507C047H01	①

Instruction Leaflet/FRED Number 13782

K-Frame

Continuous Current Rating (Amperes)	Catalog Number		
	2-Pole	3-pole	4-Pole
400	PAD32	PAD33	PAD34
Mounting Plate	②	PMP33	PMP34

Instruction Leaflet/FRED Number 15378

L-Frame

Continuous Current Rating (Amperes)	Catalog Number	
	2-Pole	3-pole
600	506C059G03	506C059G04
Mounting Plate	504C824H01	504C824H01

Instruction Leaflet/FRED Number 29C314

J-Frame

Continuous Current Rating (Amperes)	Terminal End	2-Pole	3-Pole	4-Pole
		Style/Catalog Number		
250	Line Load 1 Line and 1 Load	1260C86G05 1260C86G07 506C144G27	1260C86G06 1260C86G08 506C144G28	1231C67G01 1231C67G02 –
Mounting Plate	–	②	PMP23	–

Instruction Leaflet/FRED Number 149321

M-Frame

Continuous Current Rating (Amperes)	Catalog Number	
	2-Pole	3-Pole
800	2614D53G05	2614D53G06
Mounting Plate	1290C73H01	

Instruction Leaflet/FRED Number 15073

N-Frame

Continuous Current Rating (Amperes)	Style Number	
	2-Pole	3-pole
1200	2614D53G03	2614D53G04
Mounting Plate	1290C73H01	

Instruction Leaflet/FRED Number 13782

① Refer to Cutler-Hammer for availability.
② Use 3-pole mounting plate for 2-pole circuit breaker.

Rear Connecting Studs

Rear connecting studs are available in several sizes to accommodate specific fixed-mounted circuit breaker applications.

Each rear connecting stud assembly consists of one stud and one tube. To maintain proper clearances between poles, select alternate long and short stud assemblies for circuit breakers with more than one pole. One assembly is required for line-end and one for load-end of each pole. Tubes must be ordered separately. Connecting studs are available only with English thread sizes.

Ordering Information

F-Frame

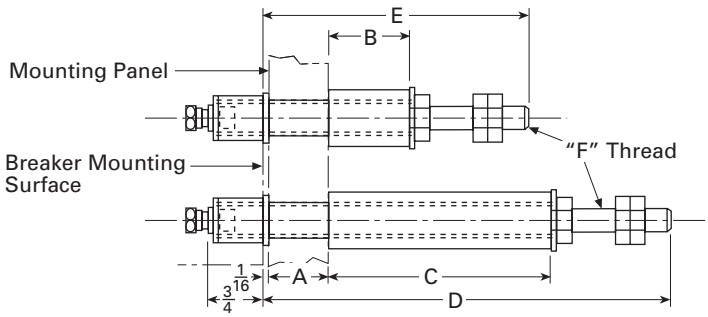

Stud Ampere Rating	Stud Style Number	Panel Thickness (Inches)	Tube Length (Inches)		Tube Style Number	Dimensions (Inches)		
		A	B	C		D	E	F
For 15A to 100A Circuit Breakers								
100A Short	**451D874G01**	1	11/16	–	**32B9446H20**	–	3-5/8	15/16 - 18
100A Short	**451D874G01**	1-1/16 to 15/16	13/8	–	**32B9446H21**	–		
100A Short	**451D874G01**	3/8 to 5/8	1-11/16	–	**32B9446H22**	–		
100A Short	**451D874G01**	1/4 to 5/16	2	–	**32B9446H23**	–		
100A Long	**451D874G02**	1	–	3-7/16	**32B9446H24**	6-1/8	–	
100A Long	**451D874G02**	1-1/16 to 15/16	–	3-3/4	**32B9446H25**		–	
100A Long	**451D874G02**	3/8 to 5/8	–	4-1/16	**32B9446H26**		–	
100A Long	**451D874G02**	1/4 to 5/16	–	4-3/8	**32B9446H27**		–	
For 110A to 150A Circuit Breakers								
150A Short	**374D883G01**	1	11/16	–	**374D883H06**	–	4-1/4	1/16 - 14
150A Short	**374D883G01**	11/16 to 15/16	13/8	–	**374D883H07**	–		
150A Short	**374D883G01**	3/8 to 5/8	1-11/16	–	**374D883H08**	–		
150A Short	**374D883G01**	1/4 to 5/16	2	–	**374D883H09**	–		
150A Long	**374D883G02**	1	–	3-7/16	**374D883H10**	7-1/2	–	
150A Long	**374D883G02**	11/16 to 15/16	–	3-3/4	**374D883H11**		–	
150A Long	**374D883G02**	3/8 to 5/8	–	4-1/16	**374D883H12**		–	
150A Long	**374D883G02**	1/4 to 5/16	–	4-3/8	**374D883H13**		–	

Rear Connecting Studs

Ordering Information

J-Frame

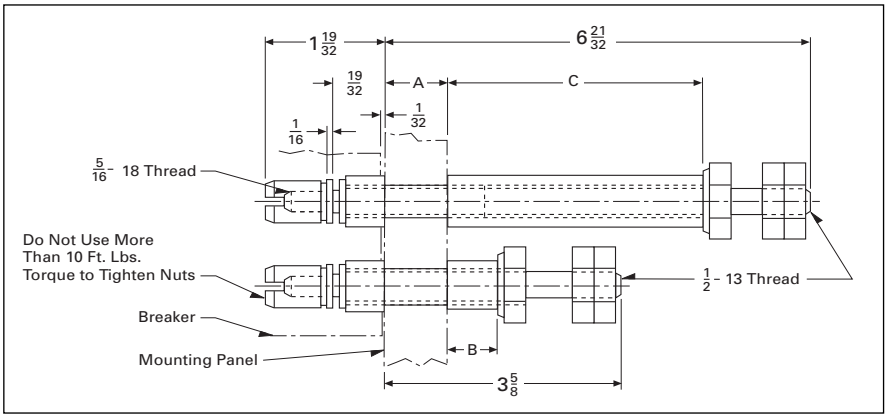

Stud Ampere Rating	Stud Style Number	Panel Thickness (Inches)	Tube Length (Inches)		Tube Style Number
		A	B	C	
250A Short	**5010D23G01**	3/4 – 1	27/32	–	**456D983H05**
250A Short	**5010D23G01**	1/2 – 3/4	1-3/32	–	**456D983H06**
250A Short	**5010D23G01**	1/4 – 1/2	1-1/32	–	**456D983H07**
250A Long	**5010D23G02**	3/4 – 1	–	37/8	**5010D23H05**
250A Long	**5010D23G02**	1/2 – 3/4	–	41/8	**5010D23H06**
250A Long	**5010D23G02**	1/4 – 1/2	–	43/8	**5010D23H07**

K-Frame

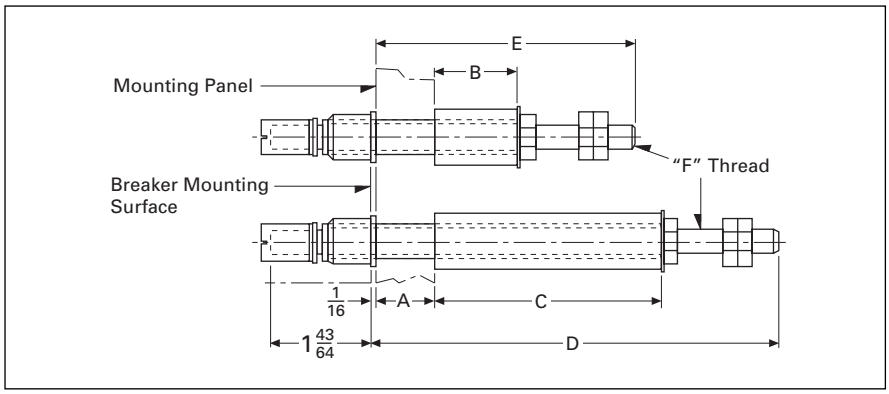

Stud Length	Stud Style Number	Panel Thickness (Inches)	Tube Length (Inches)		Standard Tube Style Number	Dimensions (Inches)		
		A	B	C		D	E	F
400A Short	**6642C14G02**	3/4 to 1	27/32	–	**313C909H17**	–	3-21/32	3/4 - 16
400A Short	**6642C14G04**	1/2 to 3/4	1-3/32	–	**313C909H18**	–		
400A Short	**6642C14G06**	1/4 to 1/2	1-11/32	–	**313C909H19**	–		
400A Long	**6642C14G03**	3/4 to 1	–	3-25/32	**313C909H20**	–		
400A Long	**6642C14G05**	1/2 to 3/4	–	4-1/32	**313C909H21**	6-37/64		
400A Long	**6642C14G07**	1/4 to 1/2	–	4-9/32	**313C909H22**	–		

L-Frame

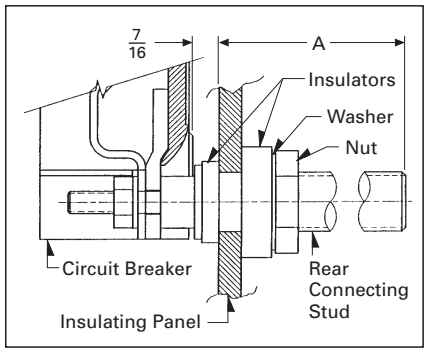

Stud Length (A)	Stud Style Number
5-15/32	**314C960G07**
7-31/32	**314C960G08**
10-15/32	**314C960G09**

M-Frame①

Stud Ampere Rating	Diameter, Inches and Thread	Extension Back of Breaker, Inches	Stud Style Numbers
225	1/2-13	3-21/32	**314C960G01**
400	3/4-16	5-29/32	**314C960G04**
400	3/4-16	8-13/32	**314C960G05**
400	3/4-16	10-29/32	**314C960G06**
600	1-12	5-29/32	**314C960G07**
600	1-12	8-13/32	**314C960G08**
600	1-12	10-29/32	**314C960G09**
800	1-1/8-12	5-29/32	**314C960G10**
800	1-1/8-12	8-13/32	**314C960G11**
800	1-1/8-12	10-29/32	**314C960G12**

N-Frame①

Stud Ampere Rating	Diameter, Inches and Thread	Extension Back of Breaker, Inches	Stud Style Numbers
800	1-1/8-12	5-1/2	**623B222G01**
800	1-1/8-12	8	**623B222G02**
800	1-1/8-12	10-1/2	**623B222G03**
1200	1-1/4-12	5-1/2	**373B375G04**
1200	1-1/4-12	10-1/2	**373B375G03**

① Not UL listed.

Panelboard Connecting Straps

Panelboard connecting straps are used to connect the circuit breaker terminals to the panelboard bus. The panelboard connecting straps are available with various ratings for outside and center poles. (Field installation only.)

Ordering Information

Panelboard connecting straps are available to meet the needs of most standard panelboard applications. Style numbers for mounting brackets for CDP panelboard installations are also included.

Refer to panelboard manufacturer for compatibility.

F-Frame

Panelboard Connecting Straps

Bus Spacing (Inches)	Continuous Current Rating (Amperes)	Pole Connector Type	
		Center	Outside
		Style Number	
5-3/4-Inch Deep Box, 600 Vac Maximum			
2-3/4	50	673B142G02	673B142G09
2-3/4	100	673B142G02	673B142G10
2-3/4	150	673B142G04	673B142G03
3-1/2	50	1253C72G01	1253C72G03
3-1/2	100	1253C73G03	1253C73G06
3-1/2	150	1253C73G01	1253C73G05

Mounting Bracket

Number of Poles	Style Number
2	624B600H02
3	624B600H01

J-Frame

Panelboard Connecting Straps

Bus Spacing (Inches)	Continuous Current Rating (Amperes)	Pole Connector Type	
		Center	Outside
		Style Number	
3-1/2	250	2600D26G01	2600D26G02

Mounting Bracket

Number of Poles	Style Number
2, 3	1576707

K-Frame

Panelboard Connecting Straps

Bus Spacing (Inches)	Continuous Current Rating (Amperes)	Pole Connector Type	
		Center	Outside
		Style Number	
3-1/2	400	4212B78G02	4212B77G01

Mounting Bracket

Number of Poles	Style Number
2, 3	208B264H01

L-Frame

Panelboard Connecting Straps

Continuous Current Rating (Amperes)	Pole Connector Type	
	Center	Outside
	Style Number	
600	624B609G01	506C052G01

Mounting Bracket

Number of Poles	Style Number
2, 3	208B297H01

M-Frame

Panelboard Connecting Straps

Bus Spacing (Inches)	Continuous Current Rating (Amperes)	Connector Type	Pole Connector Type
			Style Number
3-1/2	800	Short Medium Long	314C996G01 314C996G02 314C996G03

Mounting Bracket

Style Number
315C270H01

N-Frame

Panelboard Connecting Straps

Bus Spacing (Inches)	Continuous Current Rating (Amperes)	Connector Type	Pole Connector Type
			Style Number
3-1/2	1200	Short Medium Long	505C606G04 505C606G05 505C606G06

Mounting Bracket (Four (4) Required)

Style Number
315C270H01

Flange Mounted Flex Shaft™

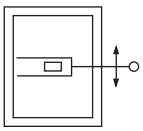

The Flex Shaft type handle mechanism is an extra heavy-duty handle mechanism designed for mounting in flange-type enclosures. An operating handle, flexible shaft, and mechanism are required for standard application.

The handle can be locked in the RESET position with up to three padlocks. The handle is suitable for Types 1, 3R, 4①, 4X①, and 12 fabricated enclosures. The handle fits the industry standard cutout.

Eight lengths of shafts are available for use with the wide range of depths of various enclosures (3 feet through 10 feet). These choices enable this mechanism to be mounted in various depth, width, and height enclosures.

Note: when selecting the length of shaft, ensure minimum bending radius of 4 inches is maintained to operate properly.

The standard method of shipment includes the mechanism preset at the factory; however, minor field adjustments may be required.

For this publication, the term Circuit Breaker shall also include the molded case switch and Series C motor circuit protector (HMCP).

UL File E64893.

① Type 4/4X handle mechanisms are available. Add suffix X to complete catalog number.
② Add suffix I to complete catalog number for IEC handle. Add suffix L to complete catalog number for 6-inch handle.

Ordering Information

Catalog Number includes complete assembly consisting of C371 handle, flexible shaft, operating mechanism, and door interlock hardware to fit industry standard flange cutout.

Length of Flex Shaft (in feet)	Catalog Number
F-Frame②	
3	F1S03C
4	F1S04C
5	F1S05C
6	F1S06C
7	F1S07C
8	F1S08C
9	F1S09C
10	F1S10C

Instruction Leaflet/FRED Number 15609

J-Frame②	
3	F2S03C
4	F2S04C
5	F2S05C
6	F2S06C
7	F2S07C
8	F2S08C
9	F2S09C
10	F2S10C

Instruction Leaflet/FRED Number 15605

K-Frame②	
3	F3S03C
4	F3S04C
5	F3S05C
6	F3S06C
7	F3S07C
8	F3S08C
9	F3S09C
10	F3S10C

Instruction Leaflet/FRED Number 15604

L- and M-Frames	
4	F4S04
5	F4S05
6	F4S06
10	F4S10

Instruction Leaflet/FRED Number 15606

N-Frame	
4	F5S04
5	F5S05
6	F5S06
10	F5S10

Instruction Leaflet/FRED Number 15606

R-Frame	
4	F6S04
5	F6S05
6	F6S06

Instruction Leaflet/FRED Number 15606

Flange Mounted Type SM Safety

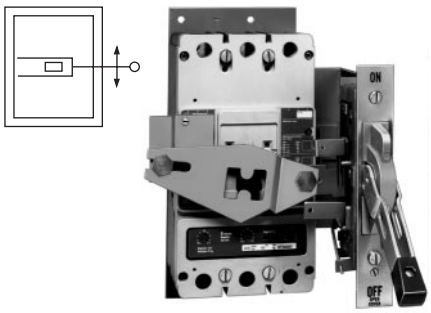

The SM safety handle mechanism provides a means of externally operating a circuit breaker mounted in an enclosure and is designed to reduce the possibility of circuit breaker tampering. The handle mechanism is especially suited for use in automotive and machine tool industries through its conformance to Type 12 and J. I. C. requirements. A specially modified handle mechanism for Type 4 enclosure application is also available order by description. The handle mechanism will accept up to three padlock shackles, each with a maximum diameter of 3/8 inch (9.52mm). UL File E64893.

Through-the-Door Type MC Motor Control

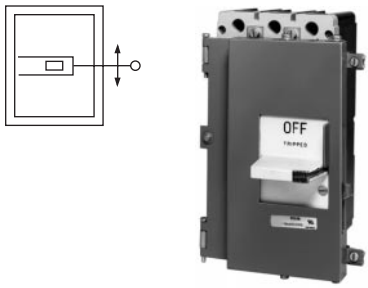

The MC motor control handle mechanism is a linear-operating, fixed-depth mechanism designed for through-the-door mounting in standardized and shallow depth enclosures. The handle mechanism provides positive operation and direct disconnect status indication. It is interlocked with the enclosure door so that the door can be opened only when the handle is set to OFF. (A defeater, supplied with the handle mechanism, can be used to bypass the interlock for maintenance and inspection.) The handle mechanism will accept up to three padlock shackles, each with a maximum diameter of 3/8 inch (7.92 mm).UL File E56845.

Ordering Information

Description		Catalog Number
F-Frame		
Right-Hand Mounting Enclosure Cover	Hinged on Left	**SM150R**
Left-Hand Mounting Enclosure Cover	Hinged on Right	**SM150L**

Instruction Leaflet/FRED Number 14439

J-Frame

Right-Hand Mounting Enclosure Cover	Hinged on Left	**SM250JR**
Left-Hand Mounting Enclosure Cover	Hinged on Right	**SM250JL**

Instruction Leaflet/FRED Number 29C274

K-Frame

Right-Hand Mounting Enclosure Cover	Hinged on Left	**SM400KR**
Left-Hand Mounting Enclosure Cover	Hinged on Right	**SM400KL**

Instruction Leaflet/FRED Number 29C274

L- and M-Frames

Hinged on Left	**SM600R**
Hinged on Right	**SM600L**

Instruction Leaflet/FRED Number 29C284

① Width spacer kits cannot be used with short rod at minimum enclosure depth.

Ordering Information

Description	Catalog Number
F-Frame	
For use with Type 1 Enclosure Catalog	**SMCU150FD**
For use with Type 12 Enclosure Catalog	**CMCU150FD**

Instruction Leaflet/FRED Number 14572

J-Frame

For use with Type 1 Enclosure Catalog	**SMCU250JD**
For use with Type 12 Enclosure Catalog	**CMCU250JD**

Instruction Leaflet/FRED Number 29C273

K-Frame

For use with Type 1 Enclosure Catalog	**SMCU400KD**
For use with Type 12 Enclosure Catalog	**CMCU400KD**

Instruction Leaflet/FRED Number 29C273

M-Frames

For use with Type 1 Enclosure Catalog	**SMCU600LD**
For use with Type 12 Enclosure Catalog	**CMCU600LD**

Instruction Leaflet/FRED Number 29C283

Through-the-Door Rotary

These compact rotary handle mechanisms are especially designed for use with the GD/GC/GHC circuit protection devices. The Close-Coupled version is designed for mounting in a shallow enclosure, while the Vari-Depth is suitable for deep enclosures.

Both G-frame handle mechanisms are suitable for use on Type 1 enclosures. In addition, the Vari-Depth handle mechanism is offered for use with Types 3R, 12, and 4X enclosures.

The new handles are a compact, plastic, general purpose design which is easy to install. These mechanisms are commonly used where high volume, standardized enclosures are being fabricated.

The Close-Coupled design is available with or without a shroud. The handle is offered in two colors; black or yellow. An escutcheon ring and interlock clip are provided as standard. This standard design includes a lock-off feature.

The Vari-Depth design includes an operating mechanism, shaft, and external handle. The handle is available in two colors; black or yellow. An external lock-off is included in the handle design. The shaft may be cut to size to fit the enclosure.

UL and CSA listed.

Ordering Information

Breaker Frame	Enclosure Type	Handle Color	Shaft Length	Shroud Included	Catalog Number
G-Frame Vari-Depth Design					
(Catalog Number includes complete assembly consisting of handle, shaft, and operating mechanism.)					
GD/GC/GHC	Type 1	Black	14 inches	–	**HRGCV11L**
GD/GC/GHC	Type 1	Yellow			**HRGCV31L**
GD/GC/GHC	Type 3R/12/4X	Black			**HRGCV14L**
GD/GC/GHC	Type 3R/12/4X	Yellow			**HRGCV34L**
G-Frame Close-Coupled Design					
(Catalog Number includes complete assembly consisting of operating handle and door interlock.)					
GD/GC/GHC	Type 1	Black	–	No	**HRGCC10**
GD/GC/GHC	Type 1	Black		Yes	**HRGCC1S**
GD/GC/GHC	Type 1	Yellow		No	**HRGCC30**
GD/GC/GHC	Type 1	Yellow		Yes	**HRGCC3S**

Instruction Leaflet/FRED Number 15567 (Close Coupled);
Instruction Leaflet/FRED Number 15569 (Variable Depth)

Through-the-Door Rotary

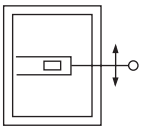

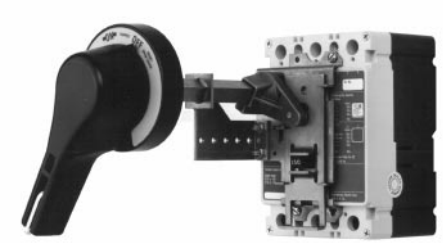

The general purpose rotary handle mechanisms are suitable for use with Types 1, 3R, (4, 4X), and 12 fabricated enclosures. They are designed for use with Series C F-frame circuit breakers, molded case switches, and motor circuit protectors (HMCP).

Required for a standard application are the operating handle, shaft, and mechanism.

The operating handle has been designed to meet NFPA 79 requirements. It may be mounted in either the horizontal or the vertical direction. The handle was ergonomically designed with extra clearance for a "gloved hand" to operate. It may be padlocked in the OFF position utilizing 3 padlocks.

The standard label on the operating handle indicates ON/Tripped/OFF/Reset. UL File E64893

To meet the various enclosure depths, four variable depth shafts are offered (6-inch, 12-inch, 16-inch, and 24-inch). Each shaft includes a support brace to ensure proper alignment. In addition, the 16-inch and 24-inch extra long shafts include an adjustable support bracket.

The standard mechanism located on the breaker does include means for internally locking the breaker in the "OFF" position with up to three padlocks each with a maximum diameter of.312-inch.

Ordering Information

Shaft Length (Inches)	Complete Catalog Number①	Separate Style Number			Catalog Number	
		Standard Handle③	Breaker Mechanism④	Shaft⑤	IEC IP65⑤⑥	IEC IP66⑤⑥
F-Frame						
6	HM1R06	6648C22G01	6648C23G11	4217B37G04	WHM1R06	WHM1R06X
12	HM1R12	6648C22G01	6648C23G11	4217B37G01	WHM1R12	WHM1R12X
16	HM1R16	6648C22G01	6648C23G11	4217B37G02	WHM1R16	WHM1R16X
24	HM1R24	6648C22G01	6648C23G11	4217B37G03	WHM1R24	WHM1R24X

Instruction Leaflet/FRED Number 15594

J-Frame						
6	HM2R06	6648C22G01	6648C23G02	4217B37G04	WHM2R06	WHM2R06X
12	HM2R12	6648C22G01	6648C23G02	4217B37G01	WHM2R12	WHM2R12X
16	HM2R16	6648C22G01	6648C23G02	4217B37G02	WHM2R16	WHM2R16X
24	HM2R24	6648C22G01	6648C23G02	4217B37G03	WHM2R24	WHM2R24X

Instruction Leaflet/FRED Number 15599

K-Frame						
6	HM3R06	6648C22G01	6648C23G13	4217B37G04	WHM3R06	WHM3R06X
12	HM3R12	6648C22G01	6648C23G13	4217B37G01	WHM3R12	WHM3R12X
16	HM3R16	6648C22G01	6648C23G13	4217B37G02	WHM3R16	WHM3R16X
24	HM3R24	6648C22G01	6648C23G13	4217B37G03	WHM3R24	WHM3R24X

Instruction Leaflet/FRED Number 15600

L- and M-Frames						
6	HM4R06	6648C22G11	6648C23G07	4217B37G04	WHM4R06	WHM4R06X
12	HM4R12	6648C22G11	6648C23G07	4217B37G01	WHM4R12	WHM4R12X
16	HM4R16	6648C22G11	6648C23G07	4217B37G02	WHM4R16	WHM4R16X
24	HM4R24	6648C22G11	6648C23G07	4217B37G03	WHM4R24	WHM4R24X

Instruction Leaflet/FRED Number 15601

N-Frame						
6	HM5R06	6648C22G11	6648C23G07	4217B37G04	WHM5R06	WHM5R06X
12	HM5R12	6648C22G11	6648C23G07	4217B37G01	WHM5R12	WHM5R12X
16	HM5R16	6648C22G11	6648C23G07	4217B37G02	WHM5R16	WHM5R16X
24	HM5R24	6648C22G11	6648C23G07	4217B37G03	WHM5R24	WHM5R24X

Instruction Leaflet/FRED Number 15602

Type 4/4X handles are similar to standard handles except they include an internal neoprene gasket. Type 4/4X handle style number is 6648C22G03. Due to gasketing effect between the handle and the housing, the handle may not indicate a tripped position.

Accessories

As an option, an auxiliary switch is offered so that the control panel builder may electrically indicate the status of the breaker. This accessory would be mounted on the mechanism and comes with 24-inch pigtail leads.

Style Number	5108A61G01

Refer to CD-ROM, SA.74A.01.T.E, for replacement type Vari-depth and AMT handle mechanisms.

① Complete catalog number includes the standard handle, mechanism, shaft, and support brace/bracket.
② Handle is designed suitable for Types 1, 3R, and 12 enclosures. Use style number 6648C22G03 for Type 4/4X handle or add X suffix to complete catalog number.
③ The standard handle label indicates ON/Tripped/OFF/Reset.
③ Breaker mechanism includes a shaft support bracket and its parts.
④ Longer shafts (16-inch and 24-inch) include an adjustable support extension.
⑤ IEC Handle Mechanism supplied with Metric thread mounting hardware.
⑥ Complete Catalog Number includes a handle, mechanism and shaft.

Door Hardware

F-, J-, K-, L- and M-Frames

Door Hardware listed in this section may be used with Types SM and AMT handle mechanisms.

Three choices of door hardware and an auxiliary handle are offered to provide the best latching scheme for individual needs. The door hardware is designed with a provision for padlocking, and a coin-proof slot that requires the use of a tool to open the door.

Select desired hardware below. Additional latches can be ordered from accessories section if desired.

Hardware Item	Description and Catalog Number
	With sliding latches for smaller panels up to approx. 30-inch high. Catalog Number Right Hand: **DH1R** Left Hand: **DH1L** Instruction Leaflet/FRED Number 13327(L); 13326(R)
	With 2-roller latches for intermediate panels up to approx. 40-inch high. Catalog Number Right Hand: **DH2R** Left Hand: **DH2L** Instruction Leaflet/FRED Number 13325(L); 13324(R)
	With 3-roller latches for larger panels, approx. 40-inch and higher. Catalog Number Right Hand: **DH3R** Left Hand: **DH3L** Instruction Leaflet/FRED Number 13323(L); 13322(R)
	Auxiliary handle for larger panels. Catalog Number Right Hand: **DH4R** Left Hand: **DH4L**

Note: Right-hand enclosure cover hinged on left, left-hand enclosure cover hinged on right.

Accessories

Dress Nameplates: Required to meet automotive specifications. Mounts from inside enclosure and covers operating mechanism mounting bolts; makes mechanism non-removable when enclosure door is closed.

Description	Style Number
Dress Nameplate	**373D260G05**

Electrical Interlock Kit: Provides 1 N.C. and 1 N.O. contacts (SPDT switch) for use with auxiliary circuits. Mounts to end of mechanism housing as shown.

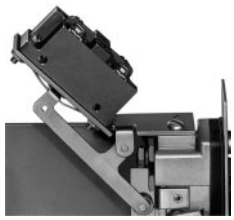

Description	Style Number
Electrical Interlock Kit	**622B747G01**

Auxiliary Latch Kits: Provide an additional latch for use with applications where two point latching may not be adequate.

Sliding Latch

Rolling Latch

Description	Style Number
For Door Hardware Using Sliding Latches	
Right- or Left-Hand Mounting	**622B747G01**
For Door Hardware Using Rolling Latches	
Right-Hand Mounting	**370D801G04**
Left-Hand Mounting	**370D802G04**

Door Operated Interlock Defeater Kit for Type SM Mechanisms

Required when door hardware is not used, operates as door closes. Additional method of securing door such as screw latch, also required (supplied by box manufacturer).

Description	Style Number
Door Operated Interlock Defeater Kit	**623B214G02**

Remote Mounting Kit (J-Frame)

Enables the operating mechanism to be mounted remotely on a vertical centerline from the circuit breaker or disconnect switch.

Description	Style Number
Remote Mounting Kit	**505C367G01**

Handle Extension

Handle extension is not included with J-, K-, L-, and M-Frame breakers. It must be purchased separately.

Frame	Catalog Number
J, K	**HEX3**
L, M	**HEX4**

Handle extension is included with breaker with N- and R-Frame breakers.

Frame	Catalog Number
N	**HEX5**
R	**HEX6**

Type LFD

The LFD current limiter is an accessory that bolts to the load end of a standard FDB or FD thermal-magnetic circuit breaker, providing 200,000A interrupting capacity at up to 600 Vac. LFD current limiters for thermal-magnetic circuit breakers are listed with Underwriters Laboratories, Inc., under File E47239.

Ordering Information

Circuit Breaker Rating Amperes①	Catalog Number
15-70	**LFD3070R**
80-160	**LFD3150R**

Instruction Leaflet/FRED Number 29C407

① Underwriters Laboratories Inc. listed under UL File E64983.

Ground Fault Alarm Unit

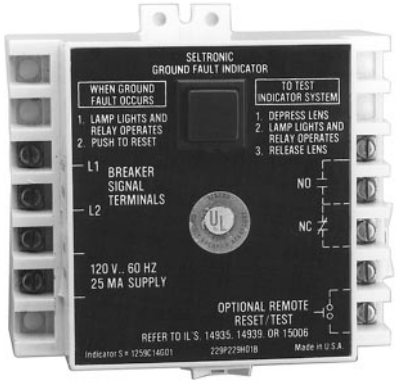

The Ground Fault Alarm Unit is a remotely mounted device with a combination indicating light/test button that will light when the breaker trips or alarms on ground fault. The Ground Fault Alarm Unit requires a separate 120 Vac power source to power the light and the internal relay which has 1 N.O. and 1 N.C. contacts for remote indication. The Ground Fault Alarm Unit can be panel mounted for ordering with an optional face mounting bracket. For use on Digitrip 310 only. K- through N-frame.

Ordering Information

Catalog Number
GFAU – Ground Fault Alarm Unit
Style Number
1264C67G01 – Face Mounting Bracket

Instruction Leaflet/FRED Number 29C614 Diagram

IQ Energy Sentinel

The IQ Energy Sentinel is a highly accurate, microprocessor-based, breaker-mounted device designed to monitor power and energy readings. It represents an alternative to watt meters, watt-hour meters, and watt demand meters. Key advantages include savings in space, lower installation costs, and remote monitoring capability.

The IQ Energy Sentinel mounts on the load side of a Series C F-frame (150 ampere) circuit breaker. It can be applied on three-phase, four-wire systems, or single-phase, three-wire systems with voltage connected through phases A and C.

Instruction Leaflet/FRED Number 17437

For more information see Descriptive Bulletin 8178.

Potential Transformer Module

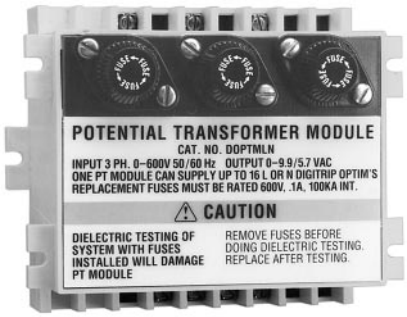

The Potential Transformer Module is required for Series C, Digitrip OPTIM 1050, to provide a voltage input to allow the trip unit to monitor power and energy as well as power factor. The Potential Transformer Module is a 6 VA transformer with a primary voltage input of up to 600V line to line. Three 0.1 ampere fuses are provided on the primary of the transformer and can be used for isolation purposes during dielectric testing. The device is normally panel mounted and can feed up to 16 OPTIM trip units.

Ordering Information

Description	Catalog Number
Potential Transformer Module	**DOPTMLN**

Instruction Leaflet/FRED Number 29C894 Diagram

Solid-State (Electronic) Portable Test Kit

The solid-state (electronic) portable test kit provides verification of performance of all ratings of Digitrip 310 electronic trip units installed in Series C circuit breakers while in service under varying load and/or phase imbalance. The test kit operates on 120-volt, 50/60 Hz power; it includes complete instructions and test times for testing long time, short time/instantaneous operation and optional ground fault operation of the circuit breaker.

Ordering Information

Description	Catalog Number
Solid-State (Electronic) Portable Test Kit	**STK2**

① Model 550 OPTIMs require the Cutler-Hammer PowerNet field upgrade kit.

Breaker Interface Module (BIM)

The Breaker Interface Module (BIM) is a panel mounted user interface device that is mounted on the front of an electrical assembly or at a remote location. The BIM is used to access, configure, test and display information for OPTIM trip units and other devices. The BIM consists of four display windows, eight function buttons, 18 LEDs, and a graphical time/current curve to provide breaker status, operational information, protection status and energy monitoring. A 24 Vdc power supply is required to provide power to the BIM. This is supplied by the switchboard builder to Cutler-Hammer specifications. The BIM is a member of the Cutler-Hammer PowerNet family of communicating devices that connects OPTIM trip units, Digitrip RMS 810/910 trip units and energy sentinels as a subnetwork system. The BIM can also be connected to a main network via a PONI module to Cutler-Hammer PowerNet software.

Ordering Information

Catalog Number
BIM

Instruction Leaflet/FRED Number 29C893

Digitrip OPTIMizer

The Digitrip OPTIMizer is a hand-held programmer that is used to access, configure, test and display information from OPTIM trip units. The OPTIMizer plugs into the front of an OPTIM trip unit via an eight-pin telephone jack and is powered by a nine-volt battery or the auxiliary power module. In addition, a three-pin INCOM network connection is also provided to program other OPTIM devices on the system. An Auxiliary Power Module connection provides a trip test when control power is not present at the breaker. The OPTIMizer is supplied as a standard package to include the programmer, the eight-pin connection cord, battery and carrying case. The Auxiliary Power Module is optional.

Ordering Information

Catalog Number
OPTIMizer – Standard Package

Instruction Leaflet/FRED Number 29C892

Note: 24 Vdc Power Supply
A 24 Vdc power supply is required for all Digitrip OPTIM trip units that are required to communicate either on the main Cutler-Hammer PowerNet network or as a subnetwork to a BIM. The breaker's load is 45 mA of current. Typically one power supply is required per switchboard and can provide control power to a BIM and the OPTIM trip units. The 24 Vdc power supply should be an "isolated high quality" power supply with a "CE" label, and is normally provided by the switchboard manufacturer to Cutler-Hammer recommendations.

Auxiliary Power Module

The Auxiliary Power Module is a power supply requiring 120 Vac input at 50 or 60 Hz that provides a 32 Vdc output①. The Auxiliary Power Module provides control power for testing an OPTIM trip unit when other means of control power is not available or for continuous OPTIMizer operation versus temporary with a battery. The Auxiliary Power Module connects into the top of the Digitrip OPTIMizer via a keyed receptacle. The main application for the Auxiliary Power Module would be for the testing of a stand-alone non-communicating OPTIM breaker that ordinarily would not have control power.

Ordering Information

Catalog Number
PRTAAPM

Cutler-Hammer PowerNet Software

Series C Digitrip OPTIM trip units can communicate back to a central Personal Computer by installing Cutler-Hammer PowerNet software②. In addition other software packages are available to allow the user to configure the trip units as well as monitor system performance.

Instruction Leaflet/FRED Number 29C890

① The OPTIMizer can work off of 32 Vdc control power, although 24 Vdc is the standard on OPTIM breakers.
② Model 550 OPTIMS require the Cutler-Hammer PowerNet field upgrade kit.

Special Calibration①

Special non-UL-listed calibrations are available for certain ambient temperatures other than 40°C and for frequencies other than 50/60 Hz or Dc. Reduced interrupting ratings will apply for 400 Hz applications. Maximum thermal calibration is limited to 135A at 400 Hz.

Suffix H01 400 Hz.

See Application Data 29-160 for information regarding special conditions.

50°C Calibration①

Add suffix "V" to catalog number for complete breaker, listed above, when ordering listed ampere ratings for breakers to be used in 50°C ambients.

Moisture-Fungus Treatment

All Series C circuit breaker cases are molded from glass-polyester which does not support the growth of fungus. Any parts which are susceptible to the growth of fungus will require special treatment.

Suffix J01 Fungus Treated

Freeze-Tested Circuit Breakers

The circuit breakers may be ordered with freeze testing. This option uses special lubrication and mechanical operation is verified at -40°C.

Suffix F01 Freeze Tested.

Marine Applications

F-Frame circuit breakers can be supplied to meet the following marine specifications:

U.S. Coast Guard CFR 46 ABS – American Bureau of Shipping
IEEE 45

These specifications generally require molded case circuit breakers to be supplied with 50°C ambient calibration, special nameplating, and plug-in adapter kits. When plug-in adapter kits are used, no terminals need be supplied.

Series C circuit breakers can also be supplied to meet UL489 Supplement SA (Marine Use) and UL489 Supplement SB (Naval Use).

UL489 Supplement SA applies to vessels over 65 feet in length. Requirements include 40°C ambient calibration, special labeling, and no use of aluminum conductors or terminals.

Suffix H08 "Marine."

UL489 Supplement SB requires 50°C ambient calibration, vibration testings, special nameplating and no use of aluminum conductors or terminals.

Suffix H09 "Naval."

① Not listed with Underwriters Laboratories, Inc.
② For use with standard 35 mm DIN rail such as, 35 x 7.5 or 15 mm per DIN EN50022.

NEMA 1 General Purpose

Surface or Flush Mounting
15-1200 Ampere Range
600 Volts Ac, 500 Volts Dc

NEMA 1 enclosed breakers are designed for indoor use in commercial buildings, apartment buildings and other areas where a general purpose enclosure is applicable. The breaker is front operable and is capable of being padlocked in the Off position. (Padlocking not available on enclosures for Quicklag® breakers.) Ratings through 1200 amperes are listed with Underwriters Laboratories, Inc. as suitable for service entrance application. Both surface and flush mounted enclosures are available. UL File Number E7819. CSA File Number LR84319.

NEMA 3R Rainproof Surface Mounting

Interchangeable Hubs (through 400 amperes)15-1200 Ampere Range
600 Volts Ac, 500 Volts Dc

This general purpose outdoor service center employs a circuit breaker inside a weatherproof sheet steel enclosure to serve as a main disconnect and protective device for feeder circuits. The operating handle can be padlocked in the Off position, and is interlocked to prevent the door from opening when the breaker is On. Ratings through 1200 amperes are listed by Underwriters Laboratories, Inc. as suitable for service entrance application. UL File Number E7819. CSA File Number LR84319.

NEMA 4/4X, 5 Water and Dustproof

Stainless Steel – Type 304
Surface Mounting
15-1200 Ampere Range
600 Volts Ac, 500 Volts Dc

This enclosure meets NEMA 4/4X and 5 requirements for water and dustproof applications and has no knockouts or other openings. It is particularly well suited for use in dairies, borax mines, breweries, paper mills and other process industries. The operating handle can be padlocked in the Off position, and is interlocked to prevent the door from opening when the breaker is On. Ratings through 1200 amperes are Underwriters Laboratories, Inc. listed as suitable for service entrance application. UL File Number E7819. CSA File Number LR84319.

NEMA 12 Dustproof Surface Mounting

No Knockouts or Other Openings
15-1200 Ampere Range
600 Volts Ac, 500 Volts Dc

The Type 12 enclosure is designed in line with specifications for special industry application where unusually severe conditions involving oil, coolant, dust and other foreign materials exist in the operating atmosphere. The handle padlocks in the Off position and the cover is interlocked with the handle mechanism to prevent opening the cover with the circuit breaker in the On position. Ratings through 1200 amperes are listed by Underwriters Laboratories, Inc. as suitable for service entrance application. A NEMA 12 semi-dust-tight design which includes knockouts is available. These units are rated 15-400 amperes, 600 volts Ac, 500 volts Dc. UL File Number E7819. CSA File Number LR84319.

NEMA 7, 9 Hazardous Location

Cast Aluminum, Explosionproof
Surface Mounting
15-800 Ampere Range
600 Volts Ac, 250 Volts Dc

Hazardous location, Class I, Groups B (except XFDN050), C, D; Class II, Groups E, F, G. This special service cast aluminum enclosure is supplied with a wide, machined flanged cover to prevent igniting outside atmospheres by arcing from inside the enclosure. Front operable, the handle padlocks in the Off position. Enclosures rated 600 amperes and above have lift-off hinges for ease of assembly. UL and cUL File Number E71279.

Enclosure Only Catalog Numbers Selection Guide①

Breaker Frame	Breaker Ampere Range	Enclosure NEMA Class	Enclosure Catalog Number
Series C® Breakers			
GC, GHC, GD 2- and 3-Pole only GHCGFEP② 1-Pole Only	15-100	1 Surface 3R 12 12K 4/4X, 5 St. Steel	**SGDN100②** **RGDN100** **JGDN100** **DGDN100** **WGDN100**
EHD, FD, FDB, HFD, FDC	15-100	1 Surface 1 Flush 3R 12 12K 4/4X, 5 St. Steel	**SFDN100** **FFDN100** **RFDN100** **JFDN100** **DFDN100** **WFDN100**
EHD, FD, FDB HFD, FDC	15-50 60-225④	7/9 Cast Aluminum 7/9 Cast Aluminum	**XFDN050** **XFDN225**
FD, FDB, HFD, FDC, ED, EDH, EDC	125-225	1 Surface 1 Flush 3R 12 12K 4/4X, 5 St. Steel	**SFDN225** **FFDN225** **RFDN225** **JFDN225** **DFDN225** **WFDN225**
JD, JDB, HJD, JDC	125-250	1 Surface 1 Flush 3R 12 12K 4/4X, 5 St. Steel	**SJDN250** **FJDN250** **RJDN250** **JJDN250** **DJDN250** **WJDN250**
JD, JDB, HJD, JDC	125-250	7/9 Cast Aluminum	**XJDN250**
KD, KDB, HKD, KDC, DK	125-400	1 Surface 1 Flush 3R 12 12K 4/4X, 5 St. Steel	**SKDN400** **FKDN400** **RKDN400** **JKDN400** **DKDN400** **WKDN400**
KD, KDB, HKD, KDC, DK	125-400	7/9 Cast Aluminum	**XKDN400**
LD, LDB, HLD, LDC	300-600	1 Surface 3R 12 4/4X, 5 St. Steel	**SLDN600** **RLDN600** **JLDN600** **WLDN600**
LD, LDB, HLD, LDC MD, MDS	300-600 400-800	7/9 Cast Aluminum	**XMCN800**
MD, MDS, ND, NDC, HND	400-1200	1 Surface 3R 12 4/4X, 5 St. Steel	**SNDN1200** **RNDN1200** **JNDN1200** **WNDN1200**
ND, HND, NDC		7/9 Cast Aluminum	**XNDN1200**
Earth Leakage Breakers⑤			
ELFD, ELHFD and ELFDC (3-Pole Only)	15-100	1 Surface 1 Flush 3R 12 12K 4/4X	**SFD100E** **FFD100E** **RFDN100E** **JFDN100E** **DFDN100E** **WFDN100E**
Current Limit-R Breakers			
FCL	15-100	3R 12 12K 4/4X, 5 St. Steel	**RFDN150** **JFDN150** **DFDN150** **WFDN150**
LCL⑥	125-400	1 Surface 3R 12 4/4X, 5 St. Steel	**SNDN1200** **RNDN1200** **JNDN1200** **WNDN1200**
TRI-PAC® Breakers			
FB-P	15-100	3R 12 12K 4/4X, 5 St. Steel	**RFDN150** **JFDN150** **DFDN150** **WFDN150**
LA-P⑦	70-400	1 Surface 3R 12 4/4X	**SNDN1200** **RNDN1200** **JNDN1200** **WNDN1200**
NB-P	500-800	12 4/4X, 5 St. Steel	**JNDPN800** **WNDPN800**

Neutral Kits, Insulated and Groundable⑧

Maximum Enclosure Rating (Amperes)	Main Lug Size Cu/Al	Ground Lug Size Cu/Al	Catalog Number
100	(1) 14–1/0	(1) 14–1/0	**INK100**
250	(1) 6–350 kcmil	(1) 4–300 kcmil	**INK250**
400	(1) 4–750 kcmil or (2) 1/0–250 kcmil	(1) 4–300 kcmil	**INK400**
600	(2) 250–500 kcmil	(1) 4–300 kcmil	**INK600**
1200	(3) 1/0 to 750 kcmil or (4) 1/0 to 750 kcmil	(1) #6–250 kcmil	**INK1200**

Raintight Hubs

All rainproof enclosures 30A through 400A are shipped with plate over cutout. Hubs are not supplied with screws on 30A through 400A enclosures. Use screws from plate.

Hub Diameter in Inches		Catalog Number
Small Hubs		
For use with RGDN and RFDN	3/4 1 1-1/4 1-1/2 2	**DS075H1** **DS100H1** **DS125H1** **DS150H1** **DS200H1**
Large Hubs		
For use with RJDN. (RKDN has two cutouts)	2 2-1/2 3	**R1H200** **R1H250** **R1H300**
Required if using Type DS hubs on RJDN and RKDN enclosures.		**R1HA**

Breather and Drain, Hazardous Enclosures⑤

Description	Compliance	Conduit Opening	Catalog Number
A Universal Breather/ Drain Fitting is installed in the top of an enclosure to provide ventilation to minimize condensation and in the bottom to allow drainage of accumulated condensation while maintaining explosion proof integrity.	Type BD: NEMA 7 – Class I, Groups C, D; Class I, Zone 1, Group IIB NEMA 9 – Class II, Groups F, G	1/2	**XPBD2**
	Type DBB: NEMA 7 – Class I, Groups B, C, D; Class I, Zone 1, Group IIB + Hydrogen NEMA 9 – Class II, Groups E, F, G	1/2	**XPDBB50**

① Enclosures only shown above; if an assembled enclosed circuit breaker is required refer to Cutler-Hammer Satellite.
② Suitable for use with one-pole breaker base mounting plate kit. QCCBP required.
③ Enclosure must have date stamp later than 4-15-98.
④ Maximum wire size: 4/0.
⑤ Availability to be announced.
⑥ LCL requires additional adapter plate 1223C06G01.
⑦ LA-P requires additional adapter plate S/N 1223C06G02.
⑧ If ground fault protection is required, contact regional satellite.

Dimensions and Shipping Weights

Not to be used for construction purposes unless approved.
Inches and Millimeters.

NEMA 1 Surface Mounted

Catalog Number	App. Wt. Lbs.	Max. Amperes	Dimensions A Inches	A mm	B Inches	B mm	C Inches	C mm	D Inches	D mm	E Inches	E mm	Conduit Sizes, Inches
SGDN100	12	100	17½	444	8 13/32	214	6 9/32	160	13 1/32	331	1 13/64	31	¼, ½, ¾, 1, 1¼, 1½, 2, 2½
SFDN100	12	100	17½	444	8 13/32	214	6 9/32	160	13 1/32	331	1 13/64	31	¼, ½, ¾, 1, 1¼, 1½, 2, 2½
SFDN150	15	150	23¼	591	8 13/32	214	6 9/32	160	18¾	476	1 13/64	31	¼, ½, ¾, 1, 1¼, 1½, 2, 2½
SFDN225	15	225	23¼	591	8 13/32	214	6 9/32	160	18¾	476	1 13/64	31	¼, ½, ¾, 1, 1¼, 1½, 2, 2½
SJDN250	31	250	34 45/64	881	10 59/64	227	7 13/64	183	30	762	1⅞	48	¼, ½, 2, 2½, 3
SKDN400	53	400	38 13/16	986	11 1/16	281	10 15/16	278	34	869	2 9/32	58	¼, ½, ¾, 1½, 2, 2½, 3, 3½
SLDN600	81	600	45⅞	1165	14 5/16	364	12⅜	314	46 5/16	1183	1 29/32	48	¼, ½, ¾, 3, 3½, 4
SNDN1200	178	1200	61 7/32	1555	21 7/16	545	15 13/32	391	61 27/32	1571	1 31/32	50	

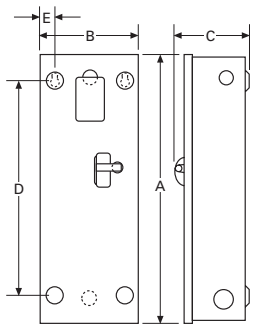

NEMA 1 Flush Mounted

FFDN100	12	100	18 13/16	478	9 23/32	247	6 9/32	160	13 1/32	331	1 55/64	47	¼, ½, ¾, 1, 1¼, 1½, 2, 2½
FFDN150	15	150	24 9/16	624	9 23/32	247	6 9/32	160	18¾	476	1 55/64	47	¼, ½, ¾, 1, 1¼, 1½, 2, 2½
FFDN225	15	225	24 9/16	624	9 23/32	247	6 9/32	160	18¾	476	1 55/64	47	¼, ½, ¾, 1, 1¼, 1½, 2, 2½
FJDN250	32	250	36 1/64	915	12 15/64	311	7 13/64	183	30	762	1⅞	48	¼, ½, 2, 2½, 3
FKDN400	53	400	40⅛	1019	12⅜	314	10 15/16	278	34	869	2 15/16	75	¼, ½, ¾, 1½, 2, 2½, 3, 3½

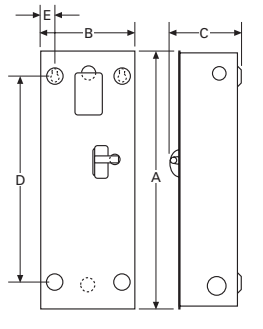

NEMA 12, 12K Dustproof

JGDN100	14	100	19 29/32	506	8 27/32	225	9 5/16	237	18 17/32	471	1 45/64	43	
JFDN100	14	100	19 29/32	506	8 27/32	225	9 5/16	237	18 17/32	471	1 45/64	43	
JFDN150	18	150	25 21/32	652	8 27/32	225	9 5/16	237	24 9/32	617	1 45/64	43	
JFDN225	18	225	25 21/32	652	8 27/32	225	9 5/16	237	24 9/32	617	1 45/64	43	
JJDN250	37	250	37 17/32	953	11 9/16	294	10 7/32	260	35 49/64	909	1 15/16	49	
JKDN400	58	400	41 11/16	1059	11¾	298	14 1/16	357	39 15/16	1014	1 31/32	150	
JLDN600	81	600	48 5/16	1227	14 29/32	379	15½	394	46 9/16	1183	1 59/64	49	
JNDPN800	110	800	63 19/32	1545	22	559	17⅝	448	–	–	–	–	
JNDN1200	170	1200	63 19/32	1545	22	559	17⅝	448	61 27/32	1571	1 31/32	50	
DGDN100	16	100	19 29/32	506	8 27/32	225	9 5/16	237	–	–	–	–	¼, ½, ¾, 1, 1¼,1½, 2, 2½
DFDN100	16	100	19 29/32	506	8 27/32	225	9 5/16	237	–	–	–	–	¼, ½, ¾, 1, 1¼,1½, 2, 2½
DFDN150	19	150	25 21/32	652	8 27/32	225	9 5/16	237	–	–	–	–	¼, ½, ¾, 1, 1¼,1½, 2, 2½
DFDN225	19	225	25 21/32	652	8 27/32	225	9 5/16	237					¼, ½, ¾, 1, 1¼,1½, 2, 2½
DJDN250	36	250	37 17/32	953	11 9/16	294	10 7/32	260	–	–	–	–	¼, ½, 2, 2½, 3
DKDN400	53	400	41 11/16	1059	11¾	298	14 1/16	357	–	–	–	–	¼, ½, ¾, 1½, 2, 2½, 3, 3½

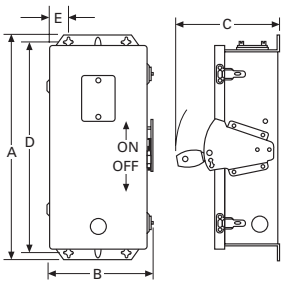

NEMA 3R Rainproof

RGDN100	14	100	19 29/32	458	8 27/32	225	9 5/16	237	18 17/32	471	1 45/64	43	¼, ½, ¾, 1, 1¼, 2, 2½
RFDN100	14	100	19 29/32	458	8 27/32	225	9 5/16	237	18 17/32	471	1 45/64	43	¼, ½, ¾, 1, 1¼, 2, 2½
RFDN150	19	150	25 21/32	603	8 27/32	225	9 5/16	237	24 9/32	617	1 45/64	43	¼, ½, ¾, 1, 1¼, 2, 2½
RFDN225	19	225	25 21/32	603	8 27/32	225	9 5/16	237	24 9/32	617	1 45/64	43	¼, ½, ¾, 1, 1¼, 2, 2½
RJDN250	40	250	37½	891	11 9/16	294	10 7/32	260	35 49/64	909	1 15/16	49	¼, ½, 2, 2½, 3
RKDN400	60	400	41 11/16	997	11¾	298	14 1/16	357	39 15/16	1014	1 31/32	50	¼, ½, ¾, 2½, 3, 3½
RLDN600	84	600	48 5/16	1227	14 29/32	379	15½	394	46 9/16	1183	1 59/64	49	¼, ½, ¾, 3, 3½, 4
RNDN1200	175	1200	63 19/32	1615	22	559	17⅝	448	61 27/32	1571	1 31/32	50	

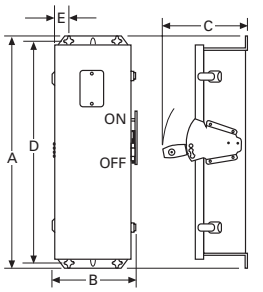

(Continued)

Dimensions and Shipping Weights

Not to be used for construction purposes unless approved.
Inches and Millimeters.

NEMA 4/4X, 5 Stainless Steel

Catalog Number	App. Wt. Lbs.	Max. Amperes	Dimensions A Inches	A mm	B Inches	B mm	C Inches	C mm	D Inches	D mm	E Inches	E mm
WGDN100	16	100	19 29/32	506	8 27/32	225	9 5/16	237	18 17/32	471	1 45/64	43
WFDN100	16	100	19 29/32	506	8 27/32	225	9 5/16	237	18 17/32	471	1 45/64	43
WFDN150	20	150	25 21/32	652	8 27/32	225	9 5/16	237	24 9/32	617	1 45/64	43
WFDN225	20	225	25 21/32	652	8 27/32	225	9 5/16	237	24 9/32	617	1 45/64	43
WJDN250	39	250	37 1/2	953	11 9/16	294	10 7/32	260	35 45/64	909	1 15/16	49
WKDN400	60	400	41 11/16	1059	11 3/4	298	14 1/16	357	39 15/16	1014	1 31/32	50
WLDN600	88	600	48 5/16	1227	14 29/32	379	15 1/2	394	46 9/16	1183	1 59/64	49
WNDN1200	185	1200	63 19/32	1545	22	559	17 5/8	448	61 27/32	1571	1 31/32	50

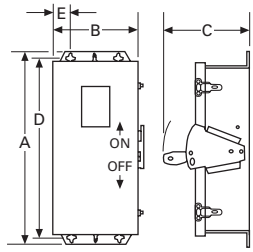

NEMA 4/4X, 5 Stainless Steel

Catalog Number	Breaker Size (Amperes)	Overall Enclosure A	B	C	D	Enclosure Mounting E	F	G	Conduit H	I	Hinged Cover J	Standard Conduit Size	Location	Weight (lbs.)	Dia. No.
XFDN050	50	15	10 5/8	8 3/4	5 13/16	9	12	1/2	1 3/4	3 1/4	2 5/8	1 1/4	2 & 7	34	1
XFDN225	100/225	25 1/2	12 1/2	10 1/8	7 5/8	10 1/2	20	1/2	2	3 1/4	4 3/4	2	2 & 7	70	1
XJDN250	250	38 1/2	13	11 1/4	8 3/4	11 1/2	28	1/2	2 1/8	3 1/2	5 1/2	2 1/2	2 & 7	120	1
XKDN400	400	44 3/4	18	12 3/8	9 7/8	10	45	1/2	3	4	5 1/2	3	1, 3 & 6, 8	180	2
XMCN800	600/800	50 3/4	20 3/4	15	12 1/2	22	40	1/2	4	5	6	4	1, 3 & 6, 8	460	3
XNDN1200	1200①	65	25	15 1/4	12 3/4	23 1/2	50	1/2	6 1/2	4 3/4	7	4	1, 3 & 6, 8	600	3

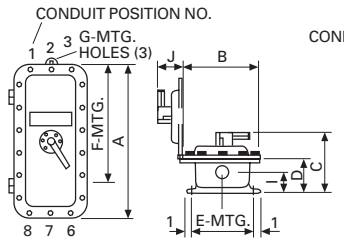

Diagram 1

Conduit Openings
Refer to outline dimensions for size and location of standard conduit openings. In addition, ½-inch openings are drilled and tapped for breather and drain. Unless ordered with breather and drain, these openings are plugged. Refer to Cutler-Hammer for list price of breather and drain.

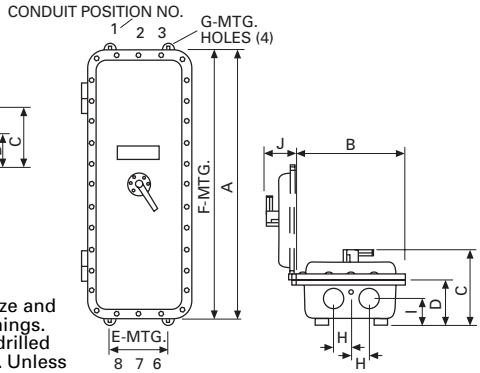

Diagram 2

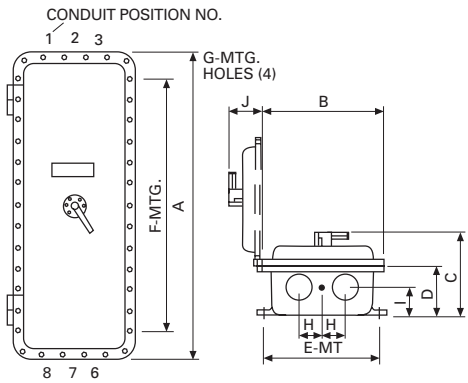

Diagram 3

Circuit Breaker Enclosure Interpretation Data

1st Field Enclosure Type			2nd Field Breaker Family	3rd Field Maximum Ampacity
NEMA 1	Flush	F	G-Frame	50
	Surface	S	F-Frame	100
NEMA 3R		R	J-Frame	150
NEMA 12		J	K-Frame	225
NEMA 12K		D	L-Frame	250
NEMA 4, 4X, 5	Stainless	W	M-Frame	400
NEMA 7/9	Cast Al.	X	N-Frame	600
				1200

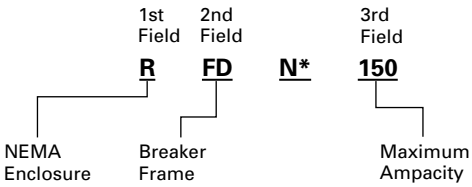

* "N" in this position indicates enclosure complies with 1981 NEC gutter space requirement.

① Power cables must enter and leave from opposite ends (through feed).

Standards

Series C® molded case circuit breakers are designed to conform with the following standards:

- Underwriters Laboratories, Inc., Standard UL 489, Molded Case Circuit Breakers and Circuit Breaker Enclosures
- National Electrical Manufacturers Association Standards Publication No. AB1-1993, Molded Case Circuit Breakers
- Australian Standard AS 2184, Molded Case Circuit Breakers
- British Standards Institution Standard BS 4752: Part 1, Switchgear and Control Gear Part 1: Circit Breakers
- Canadian Standards Association Standard C22.2 No. 5, Service Entrance and Branch Circuit Breakers
- International Electrotechnical Commission Recommendations IEC 157-1, Circuit Breakers
- Japanese T-Mark Standard Molded Case Circuit Breakers
- South African Bureau of Standards, Standard SABS 156, Standard Specification for Molded Case Circuit Breakers
- Swiss Electro-Technical Association Standard SEV 157-1, Safety Regulations for Circuit Breakers
- Union Technique de l'Electricite Standard NF C 63-120, Low Voltage Switchgear and Control Gear Circuit Breaker Requirements
- Verband Deutscher Elektrotechniker (Association of German Electrical Engineers) Standard VDE 0660, Low Voltage Switchgear and Control Gear, Circuit Breakers

Conformance with these standards satisfies most local and international codes, assuming user acceptability and simplified application.

Series C molded case circuit breakers equal or exceed Federal Specification Classification W-C-375b requirements for the particular class associated with the circuit breaker frame being considered.

Further Information

Circuit Breaker
CD-ROM SA.74A.01.T.E

Navigation Chart of CD-ROM

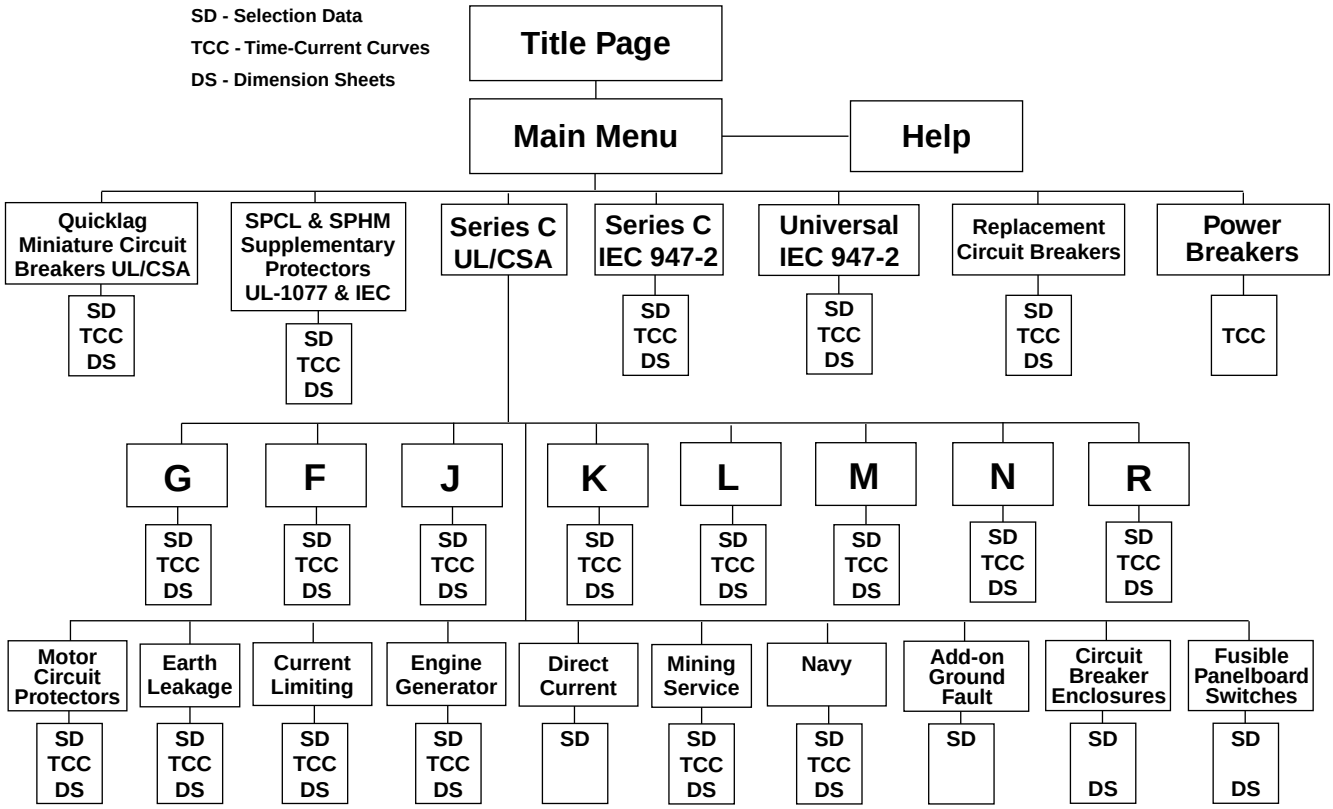

System Requirements

- Processor: 486 or faster (Pentium® or Pentium Pro recommended)
- Operating System: Microsoft Windows 95, Windows 98, Windows NT 3.5, or Windows NT 4.0
- Memory: 8 MB of available RAM (16 MB recommended)
- Available Hard Disk Storage Space: 12 MB
- Devices: a CD-ROM drive and a mouse
- Monitor: minimum 640 x 480 resolution and 8-bit color (256 colors)

Installation Instructions

- This is an autorun CD. Just insert this disk in the CD-ROM drive and wait for it to launch.

CD-ROM Installation Help Line: U.S.: 1-800-270-5134
Outside of the United States: Contact your local Cutler-Hammer sales office.

If the CD is not included in this Product Guide, contact Cutler-Hammer Fulfillment Center at 1-800-957-7050 and ask for SA.74A.01.T.E.

Miniature Circuit Breakers

Selection Guide 2

QUICKLAG® Industrial Circuit Breakers

Circuit Breakers, Plug-on Types HQP, QPHW, QHPX, QHPW 5
Ground Fault Circuit Breakers, Plug-on Types QPGF, QPHGF 6
Ground Fault Equipment Protectors, Plug-on Types QPGFEP, QPHGFEP 6
Circuit Breakers, Bolt-on Types BA, QBHW, HBAX, HBAW 7
Ground Fault Circuit Breakers, Bolt-on Types QBGF, QBHGF 8
Ground Fault Equipment Protectors, Bolt-on Types QBGFEP, QBHGFEP 8
Circuit Breakers, Cable-in/Cable-out
1-Inch per Pole Types QC, QCHW, QHCX, QHCW . . . 9
1/2-Inch per Pole Types QCR, QCF, QCRH, QCFH . . . 10
Ground Fault Circuit Breakers, Cable-in/Cable-out Types QCGF, QCHGF 13
Ground Fault Equipment Protectors, Cable-in/Cable-out Types QPGFEP, QCHGFEP 13
Solenoid-operated, Remote-controlled Types GHBS, GBHS 14
International Rated Circuit Breakers 16
Special Application Breakers 17
Accessories 18
Factory Modifications, Factory Installed Terminals . . . 19

Supplementary Protectors

Type SPCL Current Limiting 20
Type SPHM Hydraulic Magnetic 23

Circuit Breaker Electronic Catalog

Navigation Chart of Attached CD-ROM 192

- Product Guide
- Selection Data
- Time Current Curves
- Dimensions

Website: www.cutlerhammer.eaton.com

Copyright Cutler-Hammer Inc., 1999.
All Rights Reserved.

Molded Case Circuit Breakers

Selection Guide 3

Series C Circuit Breakers

G-Frame 25
F-Frame 31
J-Frame 37
K-Frame 43
L-Frame 55
M-Frame 67
N-Frame 75
R-Frame 89

Specific Application Circuit Breakers

Motor Circuit Protectors 107
Earth Leakage 113
Current Limiting
Non-fused 115
Fused 117
Engine Generator 129
Direct Current 133
Mining Service . . . . . **See CD-ROM SA.74A.01.T.E**
Navy . . . . . **See CD-ROM SA.74A.01.T.E**

Add-on Ground Fault Protection 135

Internal Accessories

Alarm Switch 139
Auxiliary Switch 142
Auxiliary and Alarm Switch Combination 145
Shunt Trip 147
Low Energy Shunt Trip 152
Undervoltage Release Mechanism 153
Terminal Block 160
Communication Kits 160

External Accessories

Termination Hardware 161
Mounting Hardware 163
Locking Devices 168
Interlocking Devices 170
Electric Operators 172
Plug-in Adapters 174
Rear Connecting Studs 175
Panelboard Connecting Straps 177
Handle Mechanisms 178

Circuit Breaker Enclosures 187

Standards 191

Circuit Breaker Type	Circuit Breaker Type Code	Cont. Ampere Rating At 40°C	Number of Poles	Volts Ac	Volts Dc	Federal Spec. W-C-375b	Interrupting Ratings rms Symmetrical Amperes: Ac Ratings Volts 120	Ac Ratings Volts 120/240	Ac Ratings Volts 240	Dc② 24-48	Dc② 62.5	Dc② 80	Page Number
Quicklag Industrial Circuit Breakers①													
Plug-in, Bolt-on, Cable-in/Cable-out													
HQP	P	10-70	1	120/240	24, 48, 62.5	10a, 11a, 12a	–	10,000	–	5,000	③	–	5
HQP		10-125	2	120/240	24, 48, 80	10a, 12a	–	10,000	–	5,000	5,000	5,000	5
HQP		10-100	2, 3	240	–	10b, 11b, 12b	–	–	10,000	–	–	–	5
QPHW	P	15-70	1	120/240	24, 48, 62.5	14a	–	22,000	–	5,000	③	–	5
QPHW		15-125	2	120/240	24, 48, 80	14a	–	22,000	–	5,000	5,000	5,000	5
QPHW		15-100	2, 3	240	–	14b	–	–	22,000	–	–	–	5
QHPX	P	15-70	1	120/240	24, 48, 62.5	–	–	42,000	–	5,000	③	–	5
QHPX		15-100	2	120/240	24, 48, 80	–	–	42,000	–	5,000	5,000	5,000	5
QHPX		15-100	3	240	–	–	–	–	42,000	–	–	–	5
QHPW	P	15-30	1	120/240	24, 48, 62.5	15a	–	65,000	–	5,000	③	–	5
QHPW		15-30	2	120/240	24, 48, 80	15a	–	65,000	–	5,000	5,000	5,000	5
QHPW		15-20	3	240	–	15b	–	–	65,000	–	–	–	5
QPGF	P, GF	15-40	1	120	–	10a, 11a, 12a	10,000	–	–	–	–	–	6
QPGF		15-50	2	120/240	–	10a, 11a, 12a	–	10,000	–	–	–	–	6
QPHGF	P, GF	15-30	1	120	–	10a, 11a, 12a	22,000	–	–	–	–	–	6
QPHGF		15-50	2	120/240	–	10a, 11a, 12a	–	22,000	–	–	–	–	6
QPGFEP	P, GFEP	15-40	1	120	–	–	10,000	–	–	–	–	–	6
QPGFEP		15-50	2	120/240	–	–	–	10,000	–	–	–	–	6
QPHGFEP	P, GFEP	15-30	1	120	–	–	22,000	–	–	–	–	–	6
QPHGFEP		15-30	2	120/240	–	–	22,000	22,000	–	–	–	–	6
BAB	B	10-70	1	120/240	24, 48, 62.5	10a, 11a, 12a	–	10,000	–	5,000	③	–	7
BAB		10-125	2	120/240	24, 48, 80	10a, 12a	–	10,000	–	5,000	5,000	5,000	7
BAB		10-100	2, 3	240	–	10b, 11b, 12b	–	–	10,000	–	–	–	7
QBHW	B	15-70	1	120/240	24, 48, 62.5	14a	–	22,000	–	5,000	③	–	7
QBHW		15-125	2	120/240	24, 48, 80	14a	–	22,000	–	5,000	5,000	5,000	7
QBHW		15-100	2, 3	240	–	14b	–	–	22,000	–	–	–	7
HBAX	B	15-70	1	120/240	24, 48, 62.5	–	–	42,000	–	5,000	③	–	7
HBAX		15-100	2	120/240	24, 48, 80	–	–	42,000	–	5,000	5,000	5,000	7
HBAX		15-100	3	240	–	–	–	–	42,000	–	–	–	7
HBAW	B	15-30	1	120/240	24, 48, 62.5	15a	–	65,000	–	5,000	③	–	7
HBAW		15-30	2	120/240	24, 48, 80	15a	–	65,000	–	5,000	5,000	5,000	7
HBAW		15-20	3	240	–	15b	–	–	65,000	–	–	–	7
QBGF	B, GF	15-40	1	120	–	10a, 11a, 12a	10,000	–	–	–	–	–	8
QBGF		15-50	2	120/240	–	10a, 11a, 12a	–	10,000	–	–	–	–	8
QBHGF	B, GF	15-30	1	120	–	10a, 11a, 12a	22,000	–	–	–	–	–	8
QBHGF		15-30	2	120/240	–	10a, 11a, 12a	–	22,000	–	–	–	–	8
QBGFEP	B, GFEP	15-40	1	120	–	–	10,000	–	–	–	–	–	8
QBGFEP		15-50	2	120/240	–	–	–	10,000	–	–	–	–	8
QBHGFEP	B, GFEP	15-30	1	120	–	–	22,000	–	–	–	–	–	8
QBHGFEP		15-30	2	120/240	–	–	22,000	22,000	–	–	–	–	8
QC	C	10-70	1	120/240	24, 48, 62.5	10a, 11a, 12a	–	10,000	–	5,000	③	–	9
QC		10-100	2	120/240	24, 48, 80	10a, 12a	–	10,000	–	5,000	5,000	5,000	9
QC		10-100	2, 3, 4	240	–	10b, 11b, 12b	–	–	10,000	–	–	–	9
QCF	C	10-60	1, 2	120/240	24, 48, 62.5	–	10,000	10,000	–	3,000	③	–	10
QCF		15-20	1, 2	120/240	24, 48, 62.5	–	22,000	–	–	3,000	3,000	–	10
QCF		15-30	2, 3	240	24, 48, 62.5	–	–	10,000	–	3,000	3,000	–	10
QCR		10-60	1, 2	120/240	24, 48, 62.5	–	10,000	10,000	–	3,000	2,000	–	10
QCR		15-20	1, 2	120/240	24, 48, 62.5	–	22,000	–	–	3,000	3,000	–	10
QCR		15-30	2, 3	240	24, 48, 62.5	–	–	10,000	–	3,000	3,000	–	10
QCHW	C	15-70	1	120/240	24, 48, 62.5	14a	–	22,000	–	5,000	③	–	9
QCHW		15-100	2	120/240	24, 48, 80	14a	–	22,000	–	5,000	5,000	5,000	9
QCHW		15-100	2, 3	240	–	14b	–	–	22,000	–	–	–	9
QHCX	C	15-70	1	120/240	24, 48, 62.5	–	–	42,000	–	5,000	③	–	9
QHCX		15-100	2	120/240	24, 48, 80	–	–	42,000	–	5,000	5,000	5,000	9
QHCX		15-100	3	240	–	–	–	–	42,000	–	–	–	9
QHCW	C	15-30	1	120/240	24, 48, 62.5	15a	–	65,000	–	5,000	③	–	9
QHCW		15-30	2	120/240	24, 48, 80	15a	–	65,000	–	5,000	5,000	5,000	9
QHCW		15-20	3	240	–	15b	–	–	65,000	–	–	–	9
QCGF	C, GF	15-40	1	120	–	–	10,000	–	–	–	–	–	13
QCGF		15-50	2	120/240	–	–	–	10,000	–	–	–	–	13
QCHGF	C, GF	15-30	1	120	–	–	22,000	–	–	–	–	–	13
QCHGF		15-30	2	120/240	–	–	–	22,000	–	–	–	–	13
QCGFEP	C, GFEP	15-40	1	120	–	–	10,000	–	–	–	–	–	13
QCGFEP		15-50	2	120/240	–	–	–	10,000	–	–	–	–	13
QCHGFEP	C, GFEP	15-30	1	120	–	–	22,000	–	–	–	–	–	13
QCHGFEP		15-30	2	120/240	–	–	–	22,000	–	–	–	–	13

Circuit Breaker Type Codes: P Plug-in; B Bolt-on; C Cable-in/Cable-out; GF Ground Fault, 5 ma; GFEP Ground Fault, 30 ma.

For Types SPCL and SPHM Supplementary Protectors, see pages 20 and 23.
For Types GHBS and GBHS Solenoid-operated, Remote-controlled Circuit Breakers, see page 14.

① QUICKLAG circuit breakers are suitable for application in relative humidity 0-95% non-condensating.

② Two-pole dc interrupting ratings based on 2 poles connected in series.

③ 62.5 Vac interrupting rating is 3800 AIC 10-50 amperes and 2500 AIC 55-100 amperes continuous.

Circuit Breaker Type	Cont. Amp Rating At 40°C	No. Poles	Volts Ac	Volts Dc	Type of Trip①	Federal Spec. W-C-375b	UL Listed Interrupting Ratings rms Symmetrical Amperes: Ac Ratings Volts 120	120/240	240	277	480	600	Dc② 125	250	125/250	Page Number
Series C® Industrial Circuit Breakers																
G-Frame																
GB	15-100	1	120	125	N.I.T.	11a	65,000	–	–	–	–	–	14,000	–	–	27
GB	15-100	2, 3	240	125/250		10b, 11b, 12b, 14b, 15b	–	–	65,000	–	–	–	–	–	14,000	27
GHB	15-100	1	120	125	N.I.T.	11a	65,000	–	–	–	–	–	14,000	–	–	27
GHB	15-100	2, 3	240	125/250		10b, 11b,	–	–	65,000	–	–	–	–	–	14,000	27
GHB	15-100	1	277	125		12b, 14b,	–	–	–	14,000	–	–	14,000	–	–	27
GHB	15-100	2, 3	277/480	125/250		15b 12c, 13a 13b	–	–	–	14,000	14,000	–	–	–	14,000	27
GC	15-100	1	120	125	N.I.T.	11a	65,000	–	–	–	–	–	14,000	–	–	28
GC	15-100	2, 3	240	125/250		10b, 11b, 12b, 14b, 15b	–	–	65,000	–	–	–	–	–	14,000	28
GHC	15-100	1	120	125	N.I.T.	12c, 13a	65,000	–	–	–	–	–	14,000	–	–	28
GHC	15-100	2, 3	240	125/250		13b	–	–	65,000	–	–	–	–	–	14,000	28
GHC	15-100	1	277	125		12c, 13a	–	–	–	14,000	–	–	14,000	–	–	28
GHC	15-100	2, 3	277/480	125/250		13b	–	–	–	14,000	14,000	–	–	–	14,000	28
F-Frame																
GD	15-100	3	480	250	N.I.T.	13b	–	–	65,000	–	22,000	–	–	10,000	–	26
ED	100-255	2, 3	240	125	N.I.T.	12b	–	–	65,000	–	–	–	10,000	–	–	32
EDH	100-255	2, 3	240	125		14b	–	–	100,000	–	–	–	10,000	–	–	32
EDC	100-255	2, 3	240	125		1	–	–	200,000	–	–	–	10,000	–	–	32
EHD	15-100	1	277	125	N.I.T.	13a	–	–	–	14,000	–	–	10,000	–	–	32
EHD	15-100	2, 3	480	250		13b	–	–	18,000	–	14,000	–	–	10,000	–	32
FDB	15-150	2, 3	600	250	N.I.T.	18a	–	–	18,000	–	14,000	14,000	–	10,000	–	32
FDB	15-150	4	600	250		③	–	–	18,000	–	14,000	14,000	–	10,000	–	32
FD	15-150	1	277	125	N.I.T.	13a	–	–	–	25,000	–	–	10,000	–	–	32
FD	15-150	2, 3	600	250		22a	–	–	65,000	–	25,000	18,000	–	10,000	–	32
FD	15-150	4	600	250		③	–	–	65,000	–	25,000	18,000	–	10,000	–	32
HFD	15-150	1	277	125	N.I.T.	13a	–	–	–	65,000	–	–	10,000	–	–	33
HFD	15-150	2,3	600	250		22a	–	–	100,000	–	65,000	25,000	–	20,000	–	33
HFD	15-150	4	600	250		③	–	–	100,000	–	65,000	25,000	–	20,000	–	33
FDC	15-150	2, 3	600	250	N.I.T.	24a	–	–	200,000	–	100,000	35,000	–	20,000	–	33
FDC	15-150	4	600	250		③	–	–	200,000	–	100,000	35,000	–	20,000	–	33
J-Frame																
JDB	70-250	2, 3	600	250	N.I.T.	22a	–	–	65,000	–	25,000	18,000	–	10,000	–	39
JD	70-250	2, 3, 4	600	250	I.T	22a	–	–	65,000	–	25,000	18,000	–	10,000	–	38
HJD	70-250	2, 3, 4	600	250	I.T	22a	–	–	100,000	–	65,000	25,000	–	22,000	–	38
JDC	70-250	2, 3, 4	600	250	I.T	22a	–	–	200,000	–	100,000	35,000	–	22,000	–	38
K-Frame																
DK	250-400	2, 3	240	250	N.I.T.	14b	–	–	65,000	–	–	–	–	10,000	–	47
KDB	100-400	2, 3	600	250	N.I.T.	23a	–	–	65,000	–	35,000	25,000	–	10,000	–	47
KD	100-400	2, 3, 4	600	250	I.T	23a	–	–	65,000	–	35,000	25,000	–	10,000	–	45, 46, 49
CKD	100-400	2, 3, 4	600	250	I.T	23a	–	–	65,000	–	35,000	25,000	–	10,000	–	48, 50
HKD	100-400	2, 3, 4	600	250	I.T	23a	–	–	100,000	–	65,000	35,000	–	22,000	–	45, 46, 49
CHKD	100-400	2, 3, 4	600	250	I.T	23a	–	–	100,000	–	65,000	35,000	–	22,000	–	48, 50
KDC	100-400	2, 3, 4	600	250	I.T	23a	–	–	200,000	–	100,000	50,000	–	22,000	–	45, 46, 49
L-Frame																
LDB	300-600	2, 3	600	250	N.I.T.	23a	–	–	65,000	–	35,000	25,000	–	22,000	–	58
LD	300-600	2, 3, 4	600	250	I.T	23a	–	–	65,000	–	35,000	25,000	–	22,000	–	57, 59
CLD	300-600	2, 3, 4	600	250	I.T	23a	–	–	65,000	–	35,000	25,000	–	22,000	–	58, 61
HLD	300-600	2, 3, 4	600	250	I.T	23a	–	–	100,000	–	65,000	35,000	–	25,000	–	57, 59
CHLD	300-600	2, 3, 4	600	250	I.T	23a	–	–	100,000	–	65,000	35,000	–	25,000	–	61
LDC	300-600	2, 3, 4	600	250	I.T	23a	–	–	200,000	–	100,000	50,000	–	25,000	–	57, 60
CLDC	300-600	2, 3, 4	600	250	I.T	23a	–	–	200,000	–	100,000	50,000	–	25,000	–	62

① N.I.T. is non-interchangeable trip unit and I.T. is interchangeable trip unit.

② Two-pole circuit breaker, or two poles of three-pole circuit breaker at 250 Vdc.

③ Not defined in W-C-375b.

Selection Guide, *Continued*

Circuit Breaker Type	Cont. Amp Rating At 40°C	No. Poles	Volts Ac	Volts Dc	Type of Trip①	Federal Spec. W-C-375b	UL Listed Interrupting Ratings rms Symmetrical Amperes: Ac Ratings Volts 120	120/240	240	277	480	600	Dc② 125	250	125/250	Page Number
Series C® Industrial Circuit Breakers																
M-Frame																
MDL	300-800	2, 3	600	250	I.T.	23a	–	–	65,000	–	50,000	25,000	–	22,000	–	69, 70
CMDL	300-800	2, 3	600	250	I.T.	23a	–	–	65,000	–	50,000	25,000	–	22,000	–	70
HMDL	300-800	2, 3	600	250	I.T.	23a	–	–	100,000	–	65,000	35,000	–	25,000	–	69, 70
CHMDL	300-800	2, 3	600	250	I.T.	23a	–	–	100,000	–	65,000	35,000	–	25,000	–	70
N-Frame																
ND	600-1200	3, 4	600	–	N.I.T.	23A	–	–	65,000	–	50,000	25,000	–	–	–	77, 83
CND	600-1200	3, 4	600	–	N.I.T.	23A	–	–	65,000	–	50,000	25,000	–	–	–	80, 84
HND	600-1200	3, 4	600	–	N.I.T.	23A	–	–	100,000	–	65,000	35,000	–	–	–	78, 83
CHND	600-1200	3, 4	600	–	N.I.T.	23A	–	–	100,000	–	65,000	35,000	–	–	–	81, 84
NDC	600-1200	3, 4	600	–	N.I.T.	23A	–	–	200,000	–	100,000	50,000	–	–	–	79, 83
CNDC	600-1200	3, 4	600	–	N.I.T.	23A	–	–	200,000	–	100,000	50,000	–	–	–	82, 84
R-Frame																
RD 1600	800-1600	3, 4	600	–	N.I.T.	24a	–	–	125,000	–	65,000	50,000	–	–	–	91
CRD 1600	800-1600	3, 4	600	–	N.I.T.	24a	–	–	125,000	–	65,000	50,000	–	–	–	93
RD 2000	1000-2000	3, 4	600	–	N.I.T.	24a	–	–	125,000	–	65,000	50,000	–	–	–	91
RD 2500	1000-2500	3, 4	600	–	N.I.T.	24a	–	–	200,000	–	65,000	50,000	–	–	–	91
CRD 2000	1000-2000	3, 4	600	–	N.I.T.	24a	–	–	125,000	–	65,000	50,000	–	–	–	93
RDC 1600	800-1600	3, 4	600	–	N.I.T.	25a	–	–	200,000	–	100,000	65,000	–	–	–	92
CRDC 1600	800-1600	3, 4	600	–	N.I.T.	25a	–	–	200,000	–	100,000	65,000	–	–	–	93
RDC 2000	1000-2000	3, 4	600	–	N.I.T.	25a	–	–	200,000	–	100,000	65,000	–	–	–	92
RDC 2500	1000-2500	3, 4	600	–	N.I.T.	25a	–	–	200,000	–	100,000	65,000	–	–	–	92
CRDC 2000	1000-2000	3, 4	600	–	N.I.T.	25a	–	–	200,000	–	100,000	65,000	–	–	–	93
Series C® HMCP Motor Circuit Protectors																107
Current Limit R Current Limiting Circuit Breakers – Non-Fused Type																
FCL	15-100	2, 3	480	–	N.I.T.	–	–	–	200,000	–	150,000	–	–	–	–	115
LCL	125-400	2, 3	600	–	N.I.T.	–	–	–	200,000	–	200,000	100,000	–	–	–	116
Tri-Pac Current Limiting Circuit Breakers – Fused Type																
FB	15-100	2, 3	600	250	N.I.T.	16a, 16b, 17a, 26a	–	–	200,000	–	200,000	200,000	–	–	100,000	117
LA	70-400	2, 3	600	250	I.T.	16a, 16b, 17a, 26a	–	–	200,000	–	200,000	200,000	–	–	100,000	118
NB	300-800	2, 3	600	250	I.T.	16b, 17a, 26a	–	–	200,000	–	200,000	200,000	–	–	100,000	119
PB	600-1600	2, 3	600	250	I.T.	17a, 26a	–	–	200,000	–	200,000	200,000	–	–	100,000	120

① N.I.T. is non-interchangeable trip unit and I.T. is interchangeable trip unit.

② Two-pole circuit breaker, or two poles of three-pole circuit breaker at 250 Vdc.

Description

Built and Listed to UL 489

QUICKLAG Circuit Breakers Plug-on Type

Type HQP: 10-150 Amperes, 10,000 AIC
Type QPHW: 15-125 Amperes, 22,000 AIC
Type QHPX: 15-100 Amperes, 42,000 AIC
Type QHPW: 15-30 Amperes, 65,000 AIC

QUICKLAG Type HQP 1-Pole

QUICKLAG Type HQP 2-Pole

QUICKLAG Type HQP 3-Pole

① All products UL and CSA listed.
② All products 15-100A are HACR rated.
③ Switching duty rated for 120 Vac fluorescent light applications.
④ For special low-magnetic breaker order HQP1015L1 or HQP1020L1

Breaker Catalog Numbers

Continuous Ampere Rating at 40°C	Catalog Number			
	1-Pole①②	2-Pole①②		3-Pole①②
	120/240 Vac	120/240 Vac	240 Vac	240 Vac
QUICKLAG Type: HQP 10,000 Ampere I.C. Thermal-Magnetic Breakers				
10	HQP1010	HQP2010	HQP2010H	HQP3010H
15	HQP1015③④	HQP2015	HQP2015H	HQP3015H
20	HQP1020③④	HQP2020	HQP2020H	HQP3020H
25	HQP1025	HQP2025	HQP2025H	HQP3025H
30	HQP1030	HQP2030	HQP2030H	HQP3030H
35	HQP1035	HQP2035	HQP2035H	HQP3035H
40	HQP1040	HQP2040	HQP2040H	HQP3040H
45	HQP1045	HQP2045	HQP2045H	HQP3045H
50	HQP1050	HQP2050	HQP2050H	HQP3050H
55	HQP1055	HQP2055	HQP2055H	HQP3055H
60	HQP1060	HQP2060	HQP2060H	HQP3060H
70	HQP1070	HQP2070	HQP2070H	HQP3070H
80	–	HQP2080	HQP2080H	HQP3080H
90	–	HQP2090	HQP2090H	HQP3090H
100	HQP1100	HQP2100	HQP2100H	HQP3100H
110	–	HQP2110	–	–
125	–	HQP2125	–	–
150	–	HQP2150	–	–
QUICKLAG Type: QPHW 22,000 Ampere I.C. Thermal-Magnetic Breakers				
15	QPHW1015③	QPHW2015	QPHW2015H	QPHW3015H
20	QPHW1020③	QPHW2020	QPHW2020H	QPHW3020H
25	QPHW1025	QPHW2025	QPHW2025H	QPHW3025H
30	QPHW1030	QPHW2030	QPHW2030H	QPHW3030H
35	QPHW1035	QPHW2035	QPHW2035H	QPHW3035H
40	QPHW1040	QPHW2040	QPHW2040H	QPHW3040H
45	QPHW1045	QPHW2045	QPHW2045H	QPHW3045H
50	QPHW1050	QPHW2050	QPHW2050H	QPHW3050H
55	QPHW1055	QPHW2055	QPHW2055H	QPHW3055H
60	QPHW1060	QPHW2060	QPHW2060H	QPHW3060H
70	QPHW1070	QPHW2070	QPHW2070H	QPHW3070H
80	–	QPHW2080	QPHW2080H	QPHW3080H
90	–	QPHW2090	QPHW2090H	QPHW3090H
100	–	QPHW2100	QPHW2100H	QPHW3100H
110	–	QPHW2110	–	–
125	–	QPHW2125	–	–
QUICKLAG Type: QHPX 42,000 Ampere I.C. Thermal-Magnetic Breakers				
15	QHPX1015③	QHPX2015	–	QHPX3015H
20	QHPX1020③	QHPX2020	–	QHPX3020H
25	QHPX1025	QHPX2025	–	QHPX3025H
30	QHPX1030	QHPX2030	–	QHPX3030H
35	QHPX1035	QHPX2035	–	QHPX3035H
40	QHPX1040	QHPX2040	–	QHPX3040H
45	QHPX1045	QHPX2045	–	QHPX3045H
50	QHPX1050	QHPX2050	–	QHPX3050H
55	QHPX1055	QHPX2055	–	QHPX3055H
60	QHPX1060	QHPX2060	–	QHPX3060H
70	QHPX1070	QHPX2070	–	QHPX3070H
80	–	QHPX2080	–	QHPX3080H
90	–	QHPX2090	–	QHPX3090H
100	–	QHPX2100	–	QHPX3100H
QUICKLAG Type: QHPW 65,000 Ampere I.C. Thermal-Magnetic Breakers				
15	QHPW1015③	QHPW2015	–	QHPW3015H
20	QHPW1020③	QHPW2020	–	QHPW3020H
25	QHPW1025	QHPW2025	–	–
30	QHPW1030	QHPW2030	–	–

Shipping Data

Poles	Carton Quantity	Approximate Weight Lbs. (Kgs)	Dimensions Inches (mm)
1	24	9.000 (4.09)	12.500 (317.50) x 7.500 (190.50) x 5.000 (127.00)
2	12	9.000 (4.09)	12.500 (317.50) x 7.500 (190.50) x 5.000 (127.00)
3	8	9.000 (4.09)	12.500 (317.50) x 7.500 (190.50) x 5.000 (127.00)

QUICKLAG Industrial Ground Fault Circuit Breakers and Equipment Protectors Plug-on

Description

Plug-on Type
Built and Listed to UL 489

QUICKLAG Ground Fault Circuit Breakers, Class A GFCI
Built and Tested to UL 943
5mA Trip Sensitivity

Type QPGF: 15-50 Amperes, 10,000 AIC
Type QPHGF: 15-30 Amperes, 22,000 AIC

QUICKLAG Ground Fault Equipment Protectors
Built and Listed to UL 1053
30mA Trip Sensitivity

Type QPGFEP: 15-50 Amperes, 10,000 AIC
Type QPHGFEP: 15-30 Amperes, 22,000 AIC

QUICKLAG Type QPGF 1-Pole Ground Fault Circuit Breaker

QUICKLAG Type QPGF 2-Pole Ground Fault Circuit Breaker

Breaker Catalog Numbers

Continuous Ampere Rating at 40°C	Catalog Number	
	1-Pole	2-Pole
	120 Vac	120/240 Vac
Ground Fault Circuit Breakers – 5mA Sensitivity		
QUICKLAG Type: QPGF 10,000 Ampere I.C. Thermal-Magnetic Breakers		
15	QPGF1015	QPGF2015
20	QPGF1020	QPGF2020
25	QPGF1025	QPGF2025
30	QPGF1030	QPGF2030
40	QPGF1040	QPGF2040
50	–	QPGF2050
QUICKLAG Type: QPHGF 22,000 Ampere I.C. Thermal-Magnetic Breakers		
15	QPHGF1015	QPHGF2015
20	QPHGF1020	QPHGF2020
25	QPHGF1025	QPHGF2025
30	QPHGF1030	QPHGF2030
Ground Fault Equipment Protectors – 30mA Sensitivity		
QUICKLAG Type: QPGFEP 10,000 Ampere I.C. Thermal-Magnetic Breakers		
15	QPGFEP1015	QPGFEP2015
20	QPGFEP1020	QPGFEP2020
25	QPGFEP1025	QPGFEP2025
30	QPGFEP1030	QPGFEP2030
40	QPGFEP1040	QPGFEP2040
50	–	QPGFEP2050
QUICKLAG Type: QPHGFEP 22,000 Ampere I.C. Thermal-Magnetic Breakers		
15	QPHGFEP1015	QPHGFEP2015
20	QPHGFEP1020	QPHGFEP2020
25	QPHGFEP1025	QPHGHEP2025
30	QPHGFEP1030	QPHGFEP2030
Special Application Ground Fault Circuit Protectors – 5mA Sensitivity		
QUICKLAG Type: QPGF 10,000 Ampere I.C. with Bell Alarm (W1) or Auxiliary Switch (W2)		
15	QPGF1015W1	QPGF2015W1
20	QPGF1020W1	QPGF2020W1
25	QPGF1025W1	QPGF2025W1
30	QPGF1030W1	QPGF2030W1
40	–	QPGF2040W1
50	–	QPGF2050W1
15	QPGF1015W2	–
20	QPGF1020W2	–
25	QPGF1025W2	–
30	QPGF1030W2	–
Special Application Ground Fault Circuit Protectors – 30mA Sensitivity		
QUICKLAG Type: QPGFEP 10,000 Ampere I.C. with Bell Alarm (W1) or Auxiliary Switch (W2)		
15	QPGFEP1015W1	QPGFEP2015W1
20	QPGFEP1020W1	QPGFEP2020W1
25	QPGFEP1025W1	QPGFEP2025W1
30	QPGFEP1030W1	QPGFEP2030W1
40	–	QPGFEP2040W1
50	–	QPGFEP2050W1
15	QPGFEP1015W2	–
20	QPGFEP1020W2	–
25	QPGFEP1025W2	–
30	QPGFEP1030W2	–

Shipping Data

Shipped individually or in carton quantities.

Poles	Carton Quantity	Approximate Weight Lbs. (Kgs)	Dimensions Inches (mm)
1	20	11.000 (4.99)	12.500 (317.50) x 6.500 (165.10) x 5.000 (127.00)
2	5	5.000 (2.29)	15.500 (393.70) x 6.000 (152.40) x 4.500 (114.30)

Bell Alarm and Auxiliary Contact Schematic

Single-throw double-pole contacts are UL and CSA listed for 5 Amperes at 250 Vac.
Bell Alarm (W1) – contacts change state when breaker trips.
Auxiliary Switch (W2) – contacts change state when breaker is opened (or tripped) or closed.
14-inch long #18 AWG pigtail wire leads provided.

Description

Built and Listed to UL 489

QUICKLAG Circuit Breakers Bolt-on Type

Type BA: 10-125 Amperes, 10,000 AIC
Type QBHW: 15-125 Amperes, 22,000 AIC
Type HBAX: 15-100 Amperes, 42,000 AIC
Type HBAW: 15-30 Amperes, 65,000 AIC

QUICKLAG Type BA 1-Pole

QUICKLAG Type BA 2-Pole

QUICKLAG Type BA 3-Pole

① All products UL and CSA listed.
② All products 15-100A are HACR rated.
③ Switching duty rated for 120 Vac fluorescent light applications.
④ For special low-magnetic breaker order BAB1015L1 or BAB1020L1.

Breaker Catalog Numbers

Continuous Ampere Rating at 40°C	Catalog Number			
	1-Pole①②	2-Pole①②		3-Pole①②
	120/240 Vac	120/240 Vac	240 Vac	240 Vac
QUICKLAG Type: BA 10,000 Ampere I.C. Thermal-Magnetic Breakers				
10	BAB1010	BAB2010	BAB2010H	BAB3010H
15	BAB1015③④	BAB2015	BAB2015H	BAB3015H
20	BAB1020③④	BAB2020	BAB2020H	BAB3020H
25	BAB1025	BAB2025	BAB2025H	BAB3025H
30	BAB1030	BAB2030	BAB2030H	BAB3030H
35	BAB1035	BAB2035	BAB2035H	BAB3035H
40	BAB1040	BAB2040	BAB2040H	BAB3040H
45	BAB1045	BAB2045	BAB2045H	BAB3045H
50	BAB1050	BAB2050	BAB2050H	BAB3050H
55	BAB1055	BAB2055	BAB2055H	BAB3055H
60	BAB1060	BAB2060	BAB2060H	BAB3060H
70	BAB1070	BAB2070	BAB2070H	BAB3070H
80	–	BAB2080	BAB2080H	BAB3080H
90	–	BAB2090	BAB2090H	BAB3090H
100	BAB1100	BAB2100	BAB2100H	BAB3100H
110	–	BAB2110	–	–
125	–	BAB2125	–	–
QUICKLAG Type: QBHW 22,000 Ampere I.C. Thermal-Magnetic Breakers				
15	QBHW1015③	QBHW2015	QBHW2015H	QBHW3015H
20	QBHW1020③	QBHW2020	QBHW2020H	QBHW3020H
25	QBHW1025	QBHW2025	QBHW2025H	QBHW3025H
30	QBHW1030	QBHW2030	QBHW2030H	QBHW3030H
35	QBHW1035	QBHW2035	QBHW2035H	QBHW3035H
40	QBHW1040	QBHW2040	QBHW2040H	QBHW3040H
45	QBHW1045	QBHW2045	QBHW2045H	QBHW3045H
50	QBHW1050	QBHW2050	QBHW2050H	QBHW3050H
55	QBHW1055	QBHW2055	QBHW2055H	QBHW3055H
60	QBHW1060	QBHW2060	QBHW2060H	QBHW3060H
70	QBHW1070	QBHW2070	QBHW2070H	QBHW3070H
80	–	QBHW2080	QBHW2080H	QBHW3080H
90	–	QBHW2090	QBHW2090H	QBHW3090H
100	–	QBHW2100	QBHW2100H	QBHW3100H
110	–	QBHW2110	–	–
125	–	QBHW2125	–	–
QUICKLAG Type: HBAX 42,000 Ampere I.C. Thermal-Magnetic Breakers				
15	HBAX1015③	HBAX2015	–	HBAX3015H
20	HBAX1020③	HBAX2020	–	HBAX3020H
25	HBAX1025	HBAX2025	–	HBAX3025H
30	HBAX1030	HBAX2030	–	HBAX3030H
35	HBAX1035	HBAX2035	–	HBAX3035H
40	HBAX1040	HBAX2040	–	HBAX3040H
45	HBAX1045	HBAX2045	–	HBAX3045H
50	HBAX1050	HBAX2050	–	HBAX3050H
55	HBAX1055	HBAX2055	–	HBAX3055H
60	HBAX1060	HBAX2060	–	HBAX3060H
70	HBAX1070	HBAX2070	–	HBAX3070H
80	–	HBAX2080	–	HBAX3080H
90	–	HBAX2090	–	HBAX3090H
100	–	HBAX2100	–	HBAX3100H
QUICKLAG Type: HBAW 65,000 Ampere I.C. Thermal-Magnetic Breakers				
15	HBAW1015③	HBAW2015	–	HBAW3015H
20	HBAW1020③	HBAW2020	–	HBAW3020H
25	HBAW1025	HBAW2025	–	–
30	HBAW1030	HBAW2030	–	–

Shipping Data

Poles	Carton Quantity	Approximate Weight Lbs. (Kgs)	Dimensions Inches (mm)
1	24	9.000 (4.09)	12.500 (317.50) x 7.500 (190.50) x 5.000 (127.00)
2	18	9.000 (4.09)	12.500 (317.50) x 7.500 (190.50) x 5.000 (127.00)
3	8	9.000 (4.09)	12.500 (317.50) x 7.500 (190.50) x 5.000 (127.00)

QUICKLAG Industrial Ground Fault Circuit Protectors Bolt-on

Description

Bolt-on Type
Built and Listed to UL 489

QUICKLAG Ground Fault Circuit Breakers, Class A GFCI
Built and Tested to UL 943
5mA Trip Sensitivity

Type QBGF: 15-50 Amperes, 10,000 AIC
Type QBHGF: 15-30 Amperes, 22,000 AIC

QUICKLAG Ground Fault Equipment Protectors
Built and Tested to UL 1053
30mA Trip Sensitivity

Type QBGFEP: 15-50 Amperes, 10,000 AIC
Type QBHGFEP: 15-30 Amperes, 22,000 AIC

QUICKLAG Type QBGF 1-Pole Ground Fault Circuit Breaker

QUICKLAG Type QBGF 2-Pole Ground Fault Circuit Breaker

Breaker Catalog Numbers

Continuous Ampere Rating at 40°C	Catalog Number	
	1-Pole	2-Pole
	120 Vac	120/240 Vac
Ground Fault Circuit Breakers – 5mA Sensitivity		
QUICKLAG Type: QBGF 10,000 Ampere I.C. Thermal-Magnetic Breakers		
15	QBGF1015	QBGF2015
20	QBGF1020	QBGF2020
25	QBGF1025	QBGF2025
30	QBGF1030	QBGF2030
40	QBGF1040	QBGF2040
50	–	QBGF2050
QUICKLAG Type: QBHGF 22,000 Ampere I.C. Thermal-Magnetic Breakers		
15	QBHGF1015	QBHGF2015
20	QBHGF1020	QBHGF2020
25	QBHGF1025	QBHGF2025
30	QBHGF1030	QBHGF2030
Ground Fault Equipment Protectors – 30mA Sensitivity		
QUICKLAG Type: QBGFEP 10,000 Ampere I.C. Thermal-Magnetic Breakers		
15	QBGFEP1015	QBGFEP2015
20	QBGFEP1020	QBGFEP2020
25	QBGFEP1025	QBGFEP2025
30	QBGFEP1030	QBGFEP2030
40	QBGFEP1040	QBGFEP2040
50	–	QBGFEP2050
QUICKLAG Type: QBHGFEP 22,000 Ampere I.C. Thermal-Magnetic Breakers		
15	QBHGFEP1015	QBHGFEP2015
20	QBHGFEP1020	QBHGFEP2020
25	QBHGFEP1025	QBHGFEP2025
30	QBHGFEP1030	QBHGFEP2030
Special Application Ground Fault Circuit Protectors – 5mA Sensitivity		
QUICKLAG Type: QBGF 10,000 Ampere I.C. with Bell Alarm (W1) or Auxiliary Switch (W2)		
15	QBGF1015W1	QBGF2015W1
20	QBGF1020W1	QBGF2020W1
25	QBGF1025W1	QBGF2025W1
30	QBGF1030W1	QBGF2030W1
40	–	QBGF2040W1
50	–	QBGF2050W1
15	QBGF1015W2	–
20	QBGF1020W2	–
25	QBGF1025W2	–
30	QBGF1030W2	–
Special Application Ground Fault Circuit Protectors – 30mA Sensitivity		
QUICKLAG Type: QBGFEP 10,000 Ampere I.C. with Bell Alarm (W1) or Auxiliary Switch (W2)		
15	QBGFEP1015W1	QBGFEP2015W1
20	QBGFEP1020W1	QBGFEP2020W1
25	QBGFEP1025W1	QBGFEP2025W1
30	QBGFEP1030W1	QBGFEP2030W1
40	–	QBGFEP2040W1
50	–	QBGFEP2050W1
15	QBGFEP1015W2	–
20	QBGFEP1020W2	–
25	QBGFEP1025W2	–
30	QBGFEP1030W2	–

Shipping Data

Poles	Carton Quantity	Approximate Weight Lbs. (Kgs)	Dimensions Inches (mm)
1	20	11.000 (4.99)	12.500 (317.50) x 6.500 (165.10) x 5.000 (127.00)
2	5	5.000 (2.29)	15.500 (393.70) x 6.000 (152.40) x 4.500 (114.30)

Bell Alarm and Auxiliary Contact Schematic

Single-throw double-pole contacts are UL and CSA listed for 5 Amperes at 250 Vac.
Bell Alarm (W1) – contacts change state when breaker trips.
Auxiliary Switch (W2) – contacts change state when breaker is opened (or tripped) or closed.
14-inch long #18 AWG pigtail wire leads provided.

QUICKLAG Industrial Circuit Breakers Cable-in/Cable-out (1 inch per pole)

Description

Built and Listed to UL 489

QUICKLAG Circuit Breakers Cable-in/Cable-out Type

Type QC: 10-100 Amperes, 10,000 AIC
Type QCHW: 15-100 Amperes, 22,000 AIC
Type QHCX: 15-100 Amperes, 42,000 AIC
Type QHCW: 15-30 Amperes, 65,000 AIC

QUICKLAG Type QC 1-Pole

QUICKLAG Type QC 3-Pole

QUICKLAG Type QC 4-Pole

Breaker Catalog Numbers

Continuous Ampere Rating at 40°C	Catalog Number				
	1-Pole①②	2-Pole①②		3-Pole①②	4-Pole①②
	120/240 Vac	120/240 Vac	240 Vac	240 Vac	240 Vac
QUICKLAG Type: QC 10,000 Ampere I.C. Thermal-Magnetic Breakers					
10	QC1010	QC2010	QC2010H	QC3010H	QC4010H
15	QC1015③④	QC2015	QC2015H	QC3015H	QC4015H
20	QC1020③④	QC2020	QC2020H	QC3020H	QC4020H
25	QC1025	QC2025	QC2025H	QC3025H	QC4025H
30	QC1030	QC2030	QC2030H	QC3030H	QC4030H
35	QC1035	QC2035	QC2035H	QC3035H	QC4035H
40	QC1040	QC2040	QC2040H	QC3040H	QC4040H
45	QC1045	QC2045	QC2045H	QC3045H	QC4045H
50	QC1050	QC2050	QC2050H	QC3050H	QC4050H
55	QC1055	QC2055	QC2055H	QC3055H	QC4055H
60	QC1060	QC2060	QC2060H	QC3060H	QC4060H
70	QC1070	QC2070	QC2070H	QC3070H	QC4070H
80	–	QC2080	QC2080H	QC3080H	QC4080H
90	–	QC2090	QC2090H	QC3090H	QC4090H
100	QC1100	QC2100	QC2100H	QC3100H	QC4100H
QUICKLAG Type: QCHW 22,000 Ampere I.C. Thermal-Magnetic Breakers					
15	QCHW1015③	QCHW2015	QCHW2015H	QCHW3015H	QCHW4015H
20	QCHW1020③	QCHW2020	QCHW2020H	QCHW3020H	QCHW4020H
25	QCHW1025	QCHW2025	QCHW2025H	QCHW3025H	QCHW4025H
30	QCHW1030	QCHW2030	QCHW2030H	QCHW3030H	QCHW4030H
35	QCHW1035	QCHW2035	QCHW2035H	QCHW3035H	QCHW4035H
40	QCHW1040	QCHW2040	QCHW2040H	QCHW3040H	QCHW4040H
45	QCHW1045	QCHW2045	QCHW2045H	QCHW3045H	QCHW4045H
50	QCHW1050	QCHW2050	QCHW2050H	QCHW3050H	QCHW4050H
55	QCHW1055	QCHW2055	QCHW2055H	QCHW3055H	QCHW4055H
60	QCHW1060	QCHW2060	QCHW2060H	QCHW3060H	QCHW4060H
70	QCHW1070	QCHW2070	QCHW2070H	QCHW3070H	QCHW4070H
80	–	QCHW2080	QCHW2080H	QCHW3080H	QCHW4080H
90	–	QCHW2090	QCHW2090H	QCHW3090H	QCHW4090H
100	–	QCHW2100	QCHW2100H	QCHW3100H	QCHW4100H
QUICKLAG Type: QHCX 42,000 Ampere I.C. Thermal-Magnetic Breakers					
15	QHCX1015③	QHCX2015	–	QHCX3015H	–
20	QHCX1020③	QHCX2020	–	QHCX3020H	–
25	QHCX1025	QHCX2025	–	QHCX3025H	–
30	QHCX1030	QHCX2030	–	QHCX3030H	–
35	QHCX1035	QHCX2035	–	QHCX3035H	–
40	QHCX1040	QHCX2040	–	QHCX3040H	–
45	QHCX1045	QHCX2045	–	QHCX3045H	–
50	QHCX1050	QHCX2050	–	QHCX3050H	–
55	QHCX1055	QHCX2055	–	QHCX3055H	–
60	QHCX1060	QHCX2060	–	QHCX3060H	–
70	QHCX1070	QHCX2070	–	QHCX3070H	–
80	–	QHCX2080	–	QHCX3080H	–
90	–	QHCX2090	–	QHCX3090H	–
100	–	QHCX2100	–	QHCX3100H	–
QUICKLAG Type: QHCW 65,000 Ampere I.C. Thermal-Magnetic Breakers					
15	QHCW1015③	QHCW2015	–	QHCW3015H	–
20	QHCW1020③	QHCW2020	–	QHCW3020H	–
25	QHCW1025	QHCW2025	–	–	–
30	QHCW1030	QHCW2030	–	–	–

Shipping Data

Poles	Carton Quantity	Approximate Weight Lbs. (Kgs)	Dimensions Inches (mm)
1	24	9.000 (4.09)	12.500 (317.50) x 7.500 (190.50) x 5.000 (127.00)
2	18	9.000 (4.09)	12.500 (317.50) x 7.500 (190.50) x 5.000 (127.00)
3	8	9.000 (4.09)	12.500 (317.50) x 7.500 (190.50) x 5.000 (127.00)

① All products UL and CSA listed.
② All products 10-100A are HACR rated.
③ Switching duty rated for 120 Vac fluorescent light applications only.
④ For special low-magnetic breaker order QC1015L1 or QC1020L1.

Description

Built and Listed to UL 489

Type QCR and QCF Circuit Breakers are UL listed Circuit Breakers that are suitable for use as branch circuit protectors.

Applications

QCR and QCF Circuit Breakers are only 1/2-inch wide per pole and are excellent for general purpose industrial applications where space savings is required.

Product Features and Ratings

- 1/2-inch wide per pole
- Cable-in/Cable-out
- Black cases with black handles
- Three position handle: ON, Tripped (center), OFF
- Thermal-Magnetic Protection
- UL File E7819
- CSA File LR48907
- One, two and three pole
- 10 kAIC at 120/240 Vac, 10-60 Amperes
- 22 kAIC at 120/240 Vac, 15-20 Amperes
- 10 kAIC at 240 Vac, 10-30 Amperes
- 3 kAIC at 62.5 Vdc (1 Pole)
- 3 kAIC at 130 Vdc (2 Poles in Series)
- Normal Operating Environment: 0-40°C 5-95% Humidity (Non-Condensating)

Additional Ratings

In addition to the ratings shown for the 1/2-inch wide QCR and QCF, the complete QC breaker line includes:

- 1-4 Poles
- 5-100 Amperes
- 10 through 65 kAIC
- 120/240 and 240 Vac
- 1-inch per pole

1-Pole 2-Pole

QCR (Rear-Mounted Breakers)

1-Pole 2-Pole

QCF (Front-Mounted Breakers)

3-Pole

QCR (Rear-Mounted Breakers)

3-Pole

QCF (Front-Mounted Breakers)

Type QCR have as a standard feature provisions for 35mm DIN-Rail rear mounting with a spring-loaded release. Optional clips for individual mounting are available as a separate accessory.

Type QCF have two threaded steel inserts to facilitate front mounting with #6-32 steel screws. The clamp type terminals accessible from the rear of the breaker so that cables can be accessed without removal of the breaker from the front cover.

QCR 1-Pole Breaker with QCRMTGFT Clips (Qty. 2) Individually Mounted

QCF Breaker Front Panel Mounted

QUICKLAG Industrial Circuit Breakers Cable-in/Cable-out (1/2 inch per pole)

Breaker Catalog Numbers①②③④

Continuous Ampere Rating at 40°C	QCR Breaker 10 kAIC Interruption Ratings⑤				QCF Breaker 10 kAIC Interruption Ratings⑤			
	120/240 Vac	120/240 Vac	240 Vac⑥		120/240 Vac	120/240 Vac	240 Vac⑥	
	1-Pole	2-Pole	2-Pole	3-Pole	1-Pole	2-Pole	2-Pole	3-Pole
QCR Breaker 10 kAIC Interruption Ratings⑤					**QCF Breaker 10 kAIC Interruption Ratings⑤**			
10	QCR1010 QCR1010T –	QCR2010 QCR2010T QCR2010P	– – –	– – –	QCF1010 QCF1010T –	QCF2010 QCF2010T –	– – –	– – –
15	QCR1015⑦ QCR1015T⑦ –	QCR2015 QCR2015T QCR2015P	QCR2015H QCR2015HT –	QCR3015H QCR3015HT –	QCF1015② QCF1015T② –	QCF2015 QCF2015T –	QCF2015H QCF2015HT –	QCF3015H QCF3015HT –
20	QCR1020⑦ QCR1020T⑦ –	QCR2020 QCR2020T QCR2020P	QCR2020H QCR2020HT –	QCR3020H QCR3020HT –	QCF1020② QCF1020T② –	QCF2020 QCF2020T –	QCF2020H QCF2020HT –	QCF3020H QCF3020HT –
25	QCR1025 QCR1025T –	QCR2025 QCR2025T QCR2025P	QCR2025H QCR2025HT –	QCR3025H QCR3025HT –	QCF1025 QCF1025T –	QCF2025 QCF2025T –	QCF2025H QCF2025HT –	QCF3025H QCF3025HT –
30	QCR1030 QCR1030T –	QCR2030 QCR2030T QCR2030P	QCR2030H QCR2030HT –	QCR3030H QCR3030HT –	QCF1030 QCF1030T –	QCF2030 QCF2030T –	QCF2030H QCF2030HT –	QCF3030H QCF3030HT –
35	QCR1035 –	QCR2035 QCR2035P	– –	– –	QCF1035 –	QCF2035 –	– –	– –
40	QCR1040 –	QCR2040 QCR2040P	– –	– –	QCF1040 –	QCF2040 –	– –	– –
45	QCR1045 –	QCR2045 QCR2045P	– –	– –	QCF1045 –	QCF2045 –	– –	– –
50	QCR1050 –	QCR2050 QCR2050P	– –	– –	QCF1050 –	QCF2050 –	– –	– –
55	QCR1055 –	QCR2055 QCR2055P	– –	– –	QCF1055 –	QCF2055 –	– –	– –
60⑧	QCR1060 –	QCR2060 QCR2060P	– –	– –	QCF1060 –	QCF2060 –	– –	– –
QCR Breaker 22 kAIC Interruption Ratings					**QCF Breaker 22 kAIC Interruption Ratings**			
15	QCRH1015⑦ QCRH1015T⑦	QCRH2015 QCRH2015T	– –	– –	QCFH1015⑦ QCFH1015T⑦	QCFH2015 QCFH2015T	– –	– –
20	QCRH1020⑦ QCRH1020T⑦	QCRH2020 QCRH2020T	– –	– –	QCFH1020⑦ QCFH1020T⑦	QCFH2020 QCFH2020T	– –	– –

Available QCR and QCF Breaker Accessories

Catalog Number	Description
QCRMTGFT	Steel mounting clip mounts QCR breaker if individual mounting is required. Quantity two required for 1- and 2-pole and four required for 3-pole breakers.
QCRFPL1P	Removable padlock device for single-pole QCR or QCF breaker.
QCRFPLMP	Removable padlock device for multi-pole QCR or QCF breaker.
QCRFLOFF	Padlock bracket assembly for QCR or QCF single or multi-pole breakers (off only).

① Standard breaker terminals are box type lugs.

② Breakers with "T" Catalog Number Suffix are suitable for line and load side ring terminal connection (#10-32 plus/minus terminal screw provided).

③ Breakers with "P" Catalog Number Suffix are suitable for terminating 2 #10 AWG Quick-Connect Type Terminals per phase on breaker load side.

④ Breakers with Shunt Trip Attachment (extra pole required on breaker right-hand side) are available. Contact Cutler-Hammer.

⑤ All ratings 15 to 60 amperes are HACR rated.

⑥ Breakers with "H" Catalog Suffix have 240 Vac construction.

⑦ All 15 and 20 ampere single-pole breakers are SWD (Switching Duty) rated for fluorescent lighting applications.

⑧ 60/75°C Cu/Al wire on all ratings except 60 amperes which requires Cu only conductor.

QCR and QCF Breaker Factory Installed Terminals

QCR and QCF Standard Box Terminals
Factory installed line and load side breaker terminal to accommodate #14 AWG to #4 AWG wire.

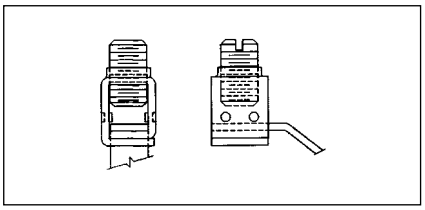

QCR Quick-Connect Terminals
Factory installed two-prong quick-connect terminal on breaker load side suitable for terminating two #10 AWG wire with insulated slip-on terminals as shown. Line side terminal is the standard type.

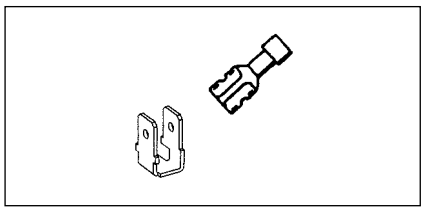

Catalog Suffix "P"

QCR and QCF Ring or Spade Lug Terminals
(10 to 30 ampere ratings only): Factory installed line and load side terminals each equipped with a #10-32 screw suitable for terminating one #10 AWG wire with insulated ring or spade type terminal as shown.

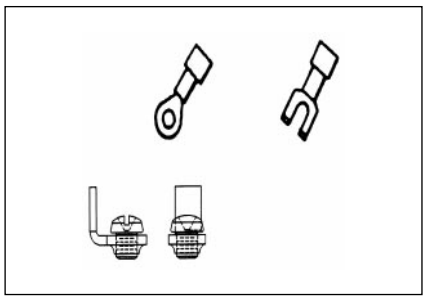

Catalog Suffix "T"

Description

Cable-in/Cable-out Type
Built and Listed to UL 489

QUICKLAG Ground Fault Circuit Breakers, Class A GFCI
Built and Tested to UL 943
5mA Trip Sensitivity

Type QCGF: 15-50 Amperes, 10,000 AIC
Type QCHGF: 15-30 Amperes, 22,000 AIC

QUICKLAG Ground Fault Equipment Protectors
Built and Tested to UL 1053
30mA Trip Sensitivity

Type QCGFEP: 15-50 Amperes, 10,000 AIC
Type QCHGFEP: 15-30 Amperes, 22,000 AIC

QUICKLAG Type QCGF 1-Pole Ground Fault Circuit Breaker

QUICKLAG Type QCGF 2-Pole Ground Fault Circuit Breaker

Breaker Catalog Numbers

Continuous Ampere Rating at 40°C	Catalog Number	
	1-Pole①	2-Pole①
	120 Vac	120/240 Vac
Ground Fault Circuit Breakers – 5mA Sensitivity		
QUICKLAG Type: QCGF 10,000 Ampere I.C. Thermal-Magnetic Breakers		
15	QCGF1015	QCGF2015
20	QCGF1020	QCGF2020
25	QCGF1025	QCGF2025
30	QCGF1030	QCGF2030
40	QCGF1040	QCGF2040
50	–	QCGF2050
QUICKLAG Type: QCHGF 22,000 Ampere I.C. Thermal-Magnetic Breakers		
15	QCHGF1015	QCHGF2015
20	QCHGF1020	QCHGF2020
25	QCHGF1025	QCHGF2025
30	QCHGF1030	QCHGF2030
Ground Fault Equipment Protectors – 30mA Sensitivity		
QUICKLAG Type: QCGFEP 10,000 Ampere I.C. Thermal-Magnetic Breakers		
15	QCGFEP1015	QCGFEP2015
20	QCGFEP1020	QCGFEP2020
25	QCGFEP1025	QCGFEP2025
30	QCGFEP1030	QCGFEP2030
40	QCGFEP1040	QCGFEP2040
50	–	QCGFEP2050
QUICKLAG Type: QCHGFEP 22,000 Ampere I.C. Thermal-Magnetic Breakers		
15	QCHGFEP1015	QCHGFEP2015
20	QCHGFEP1020	QCHGFEP2020
25	QCHGFEP1025	QCHGFEP2025
30	QCHGFEP1030	QCHGFEP2030
Special Application Ground Fault Circuit Protector – 5mA Sensitivity		
QUICKLAG Type: QCGF 10,000 Ampere I.C. with Bell Alarm (W1) or Auxiliary Switch (W2)		
15	QCGF1015W1	QCGF2015W1
20	QCGF1020W1	QCGF2020W1
25	QCGF1025W1	QCGF2025W1
30	QCGF1030W1	QCGF2030W1
40	–	QCGF2040W1
50	–	QCGF2050W1
15	QCGF1015W2	–
20	QCGF1020W2	–
25	QCGF1025W2	–
30	QCGF1030W2	–
Special Application Ground Fault Equipment Protectors – 30mA Sensitivity		
QUICKLAG Type: QCGFEP 10,000 Ampere I.C. with Bell Alarm (W1) or Auxiliary Switch (W2)		
15	QCGFEP1015W1	QCGFEP2015W1
20	QCGFEP1020W1	QCGFEP2020W1
25	QCGFEP1025W1	QCGFEP2025W1
30	QCGFEP1030W1	QCGFEP2030W1
40	–	QCGFEP2040W1
50	–	QCGFEP2050W1
15	QCGFEP1015W2	–
20	QCGFEP1020W2	–
25	QCGFEP1025W2	–
30	QCGFEP1030W2	–

Shipping Data

Poles	Carton Quantity	Approximate Weight Lbs. (Kgs)	Dimensions Inches (mm)
1	20	11.000 (4.99)	12.500 (317.50) x 6.500 (165.10) x 5.000 (127.00)
2	5	5.000 (2.29)	15.500 (393.70) x 6.000 (152.40) x 4.500 (114.30)

① All products UL and CSA listed.

Bell Alarm and Auxiliary Contact Schematic

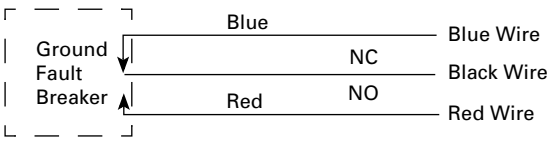

Single-throw double-pole contacts are UL and CSA listed for 5 Amperes at 250 Vac.
Bell Alarm (W1) – contacts change state when breaker trips.
Auxiliary Switch (W2) – contacts change state when breaker is opened (or tripped) or closed.
14-inch long #18 AWG pigtail wire leads provided.

Types GHBS and GBHS Solenoid-Operated, Remote-Controlled

Description

GHBS and GBHS circuit breakers are bolt-on branch circuit breakers designed for use in panelboards and are ideally suited for lighting control applications. In addition to providing conventional branch circuit protection, they include a unique solenoid-operated mechanism that provides for efficient breaker pulse-on and pulse-off operation when used with a suitable controller like the Cutler-Hammer Pow-R-Command lighting control system.

Product Features

- Bolt-on Line-Side Terminal
- Cable Connected Load-Side Terminal
- 3-Prong Control Terminal (Common, Solenoid, Auxiliary Switch)
- Bi-Metal Assembly for Thermal Overload Protection
- Fast Acting Short Circuit Protection
- Arc-Runner and Arc-Chute Assembly for Fast Acting Arc Extinction
- Three Position Handle: OFF, TRIP (Center), ON
- Handle in "ON" Position Enables Remote Control
- Handle in "OFF" Position Disables Remote Control
- Handle Permits Manual Switching When Control Power is Lost
- Mechanical Trip Indicator Window (Red-ON, Green-OFF/TRIPPED)
- 15 and 20 Ampere Breakers SWD (Switching Duty) Rated
- HID Ratings for HID (High Intensity Discharge) Lighting
- Auxiliary Switch for Control Circuit Feedback

1-Pole

2-Pole

GHBS UL 489 Interrupting Ratings

Circuit Breaker Type①	Number of Poles	Interrupting Capacity (Symmetrical Amperes)			
		Rating Amperes②	Volts Ac (50/60 Hz)		
			120	240	277/480
GHBS1015D	1	15	65,000	–	14,000
GHBS1020D	1	20	65,000	–	14,000
GHBS1030D	1	30	65,000	–	14,000
GHBS2015D	2	15	–	65,000	14,000
GHBS2020D	2	20	–	65,000	14,000
GHBS2030D	2	30	–	65,000	14,000

Instruction Leaflet/FRED Number 15546

GBHS CSA 22.2 Interrupting Ratings

Circuit Breaker Type	Number of Poles	Interrupting Capacity (Symmetrical Amperes)	
		Rating Amperes②	Volts Ac (50/60 Hz)
			347/600
GBHS1015D	1	15	10,000
GBHS1020D	1	20	10,000
GBHS2015D	2	15	10,000
GBHS2020D	2	20	10,000

15-20 Amperes

30 Amperes

Terminal Type

For load-side. Terminals are UL listed as suitable for wire type and size given below.

Circuit Breaker Amperes	Terminal Type	Screw Head Type	Wire Type	AWG Wire Range
15-20	Clamp	Slotted	Cu/Al	#14-#10
30	Box	Slotted	Cu/Al	#14-#2

Dimensions Per Pole, Inches (mm)

Width	Height	Depth
1.000 (25.40)	4.125 (104.78)	2.810 (71.37)

Dimensions in parentheses in millimeters.

① All UL listed circuit breakers are HID (High Intensity Discharge) rated.
② Continuous current rating at 40°C.

Wiring Diagrams

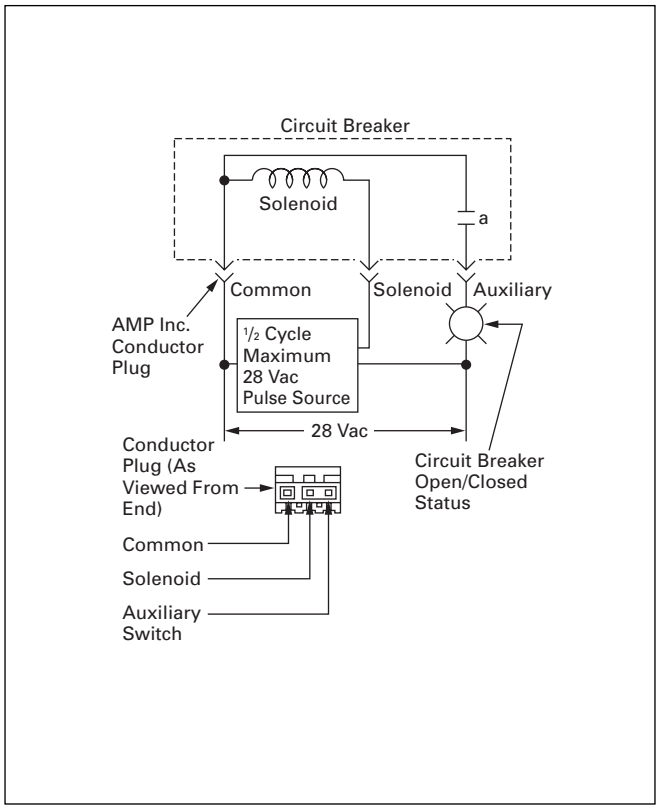

Typical Single-Pole Circuit Breaker Schematic Diagram and Conductor Plug Wiring Connections

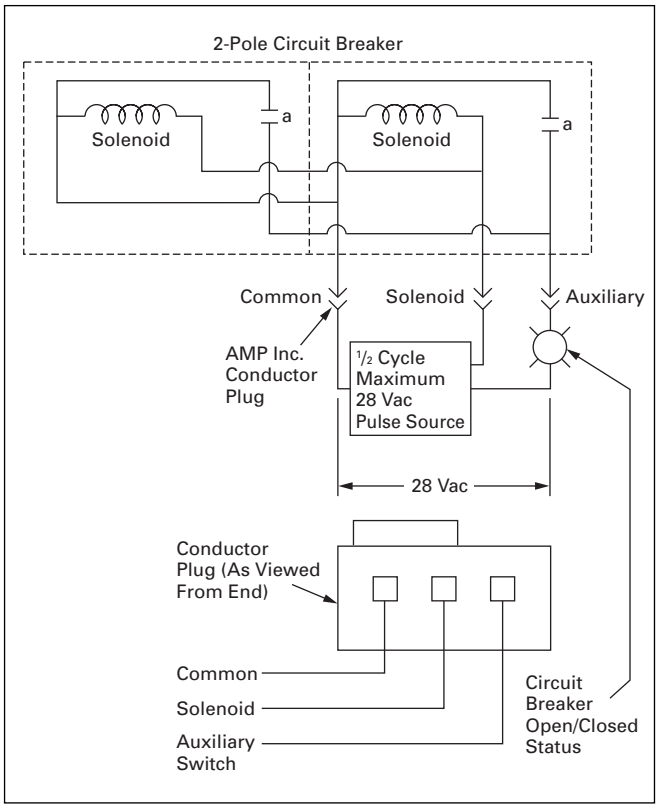

Circuit Breaker Schematic Diagram and Conductor Plug Wiring Connections for 2-Pole

Remote Control Operation

The remote-control capability of the breaker is "armed" when the breaker handle is manually switched to the "ON" position. Once armed, the breaker can be pulsed "ON" and "OFF" by a controller device which provides an ac pulse of specified magnitude and duration to the solenoid operated mechanism. Control connections to the breaker are provided through a male conductor plug (supplied by others) which snaps into the female connector provided with the breaker.
A normally open (a) auxiliary contact provides for breaker "ON"/"OFF" status indication to the remote controller and/or indicating lamp.

The remote-control capability of the breaker is "disarmed" when the breaker handle is in the "OFF" or "TRIPPED" position. In the event the breaker automatically trips, the breaker must be reset manually.

Breaker Solenoid and Operating Data

- Ambient Temperature: 0-40° C
- Nominal Pulse Magnitude: 28 volts ac RMS
- Tolerance: +10% to -15% of Nominal Voltage
- Pulse Duration: 1/2 cycle (8-10 ms)
- Minimum Recommended Pulse Current at Nominal Voltage:
  1-Pole: 4.9 Amperes Peak, 3.5 Amperes RMS
  2-Pole: 7.84 Amperes Peak, 5.6 Amperes RMS
- Breaker Operating Time: 20-40 ms
- Maximum Breaker Cycling: 6 Operations per Minute
- Humidity: 0-95% non-Condensing

Description

QUICKLAG International Circuit Breakers

Plug-on Type HQP: 10-100 Amperes
Bolt-on Type BA: 10-100 Amperes
Cable-in/Cable-out Type QC:
10-100 Amperes

Built and Test Certified to BS3871, Pt. 1 50/60 Hz, 40°C

Interrupting Ratings

	Suffix E	Suffix HE
NEMA 120/240 Vac	10,000 AIC	10,000 AIC
BS3871 220/380, 240/415 Vac	3,000 AIC	6,000 AIC

QUICKLAG International Ground Fault Circuit Breakers

Plug-on Type GFXB: 10-40 Amperes
Bolt-on Type GFXBB: 10-40 Amperes
Cable-in/Cable-out Type GFXBC:
10-40 Amperes

Built and Test Certified to
BS3871, Pt. 1
BS3871, Section 31-C
BS4293

50/60 Hz, 40°C

30 mA Sensitivity

Interrupting Rating

BS3871 220/380, 240/415 Vac	3,000 AIC

Shipping Data

Miniature Circuit Breaker	No. of Poles	Std. Carton Qty.	Approx. Carton Weight Lbs. (Kgs)	Approx. Standard Carton Dimensions Inches (mm)
QUICKLAG Types B, P, C – All	1	24	9.000 (4.09)	12.500 (317.50) x 7.500 (190.50) x 5.000 (127.00)
QUICKLAG Types B, P, C – All	2	12	9.000 (4.09)	12.500 (317.50) x 7.500 (190.50) x 5.000 (127.00)
QUICKLAG Types B, P, C – All	3	8	9.000 (4.09)	12.500 (317.50) x 7.500 (190.50) x 5.000 (127.00)
QUICKLAG Ground Fault				
Type P – All	1	20	11.000 (4.99)	12.500 (317.50) x 6.500 (165.10) x 5.000 (127.00)
Types B and C – All	1	20	11.000 (4.99)	12.500 (317.50) x 7.000 (177.80) x 5.500 (139.70)
Types P and B – All	2	5	5.000 (2.27)	12.500 (317.50) 6.000 (152.40) 4.500 (114.30)

Breaker Catalog Numbers

Continuous Ampere Rating at 40°C	Catalog Number 1-Pole	2-Pole	3-Pole	Gound Fault 1-Pole 30 mA Sensitivity
	240/415 Vac	240/415 Vac	240/415 Vac	240/415 Vac
3,000 Amperes I.C. (M3) Plug-on Thermal-Magnetic Circuit Breakers				
10	HQP1010E	HQP2010E	HQP3010E	GFXB110B2
15	HQP1015E	HQP2015E	HQP3015E	GFXB115B2
16	–	–	–	GFXB116B2
20	HQP1020E	HQP2020E	HQP3020E	GFXB120B2
25	HQP1025E	HQP2025E	HQP3025E	GFXB125B2
30	HQP1030E	HQP2030E	HQP3030E	GFXB130B2
32	–	–	–	GFXB132B2
40	HQP1040E	HQP2040E	HQP3040E	GFXB140B2
50	HQP1050E	HQP2050E	HQP3050E	–
60	HQP1060E	HQP2060E	HQP3060E	–
70	HQP1070E	HQP2070E	HQP3070E	–
90	–	HQP2090E	HQP3090E	–
100	–	HQP2100E	HQP3100E	–
6,000 Ampere I.C. (M6) Plug-on Thermal-Magnetic Circuit Breakers				
15	HQP1015HE	HQP2015HE	HQP3015HE	–
20	HQP1020HE	HQP2020HE	HQP3020HE	–
25	HQP1025HE	HQP2025HE	HQP3025HE	–
30	HQP1030HE	HQP2030HE	HQP3030HE	–
40	HQP1040HE	HQP2040HE	HQP3040HE	–
50	HQP1050HE	HQP2050HE	HQP3050HE	–
60	HQP1060HE	HQP2060HE	HQP3060HE	–
70	HQP1070HE	HQP2070HE	HQP3070HE	–
90	–	HQP2090HE	HQP3090HE	–
100	–	HQP2100HE	HQP3100HE	–
3,000 Ampere I.C. (M3) Bolt-on Thermal-Magnetic Circuit Breakers				
10	BAB1010E	BAB2010E	BAB3010E	GFXBB110B2
15	BAB1015E	BAB2015E	BAB3015E	GFXBB115B2
16	–	–	–	GFXBB116B2
20	BAB1020E	BAB2020E	BAB3020E	GFXBB120B2
25	BAB1025E	BAB2025E	BAB3025E	GFXBB125B2
30	BAB1030E	BAB2030E	BAB3030E	GFXBB130B2
32	–	–	–	GFXBB132B2
40	BAB1040E	BAB2040E	BAB3040E	GFXBB140B2
50	BAB1050E	BAB2050E	BAB3050E	–
60	BAB1060E	BAB2060E	BAB3060E	–
70	BAB1070E	BAB2070E	BAB3070E	–
90	–	BAB2090E	BAB3090E	–
100	–	BAB2100E	BAB3100E	–
6,000 Ampere I.C. (M6) Bolt-on Thermal-Magnetic Circuit Breakers				
15	BAB1015HE	BAB2015HE	BAB3015HE	–
20	BAB1020HE	BAB2020HE	BAB3020HE	–
25	BAB1025HE	BAB2025HE	BAB3025HE	–
30	BAB1030HE	BAB2030HE	BAB3030HE	–
40	BAB1040HE	BAB2040HE	BAB3040HE	–
50	BAB1050HE	BAB2050HE	BAB3050HE	–
60	BAB1060HE	BAB2060HE	BAB3060HE	–
70	BAB1070HE	BAB2070HE	BAB3070HE	–
90	–	BAB2090HE	BAB3090HE	–
100	–	BAB2100HE	BAB3100HE	–
3,000 Ampere I.C. (M3) Cable-in/Cable-out Thermal-Magnetic Circuit Breakers				
10	QC1010E	QC2010E	QC3010E	GFXBC110B2
15	QC1015E	QC2015E	QC3015E	GFXBC115B2
16	–	–	–	GFXBC116B2
20	QC1020E	QC2020E	QC3020E	GFXBC120B2
25	QC1025E	QC2025E	QC3025E	GFXBC125B2
30	QC1030E	QC2030E	QC3030E	GFXBC130B2
32	–	–	–	GFXBC132B2
40	QC1040E	QC2040E	QC3040E	GFXBC140B2
50	QC1050E	QC2050E	QC3050E	–
60	QC1060E	QC2060E	QC3060E	–
70	QC1070E	QC2070E	QC3070E	–
90	–	QC2090E	QC3090E	–
100	–	QC2100E	QC3100E	–
6,000 Ampere I.C. (M6) Cable-in/Cable-out Thermal-Magnetic Circuit Breakers				
15	QC1015HE	QC2015HE	QC3015HE	–
20	QC1020HE	QC2020HE	QC3020HE	–
25	QC1025HE	QC2025HE	QC3025HE	–
30	QC1030HE	QC2030HE	QC3030HE	–
40	QC1040HE	QC2040HE	QC3040HE	–
50	QC1050HE	QC2050HE	QC3050HE	–
60	QC1060HE	QC2060HE	QC3060HE	–
70	QC1070HE	QC2070HE	QC3070HE	–
90	–	QC2090HE	QC3090HE	–
100	–	QC2100HE	QC3100HE	–

Description

QUICKLAG Switching Neutral Circuit Breakers

Plug-on Type HQP: 10-30 Amperes, 1 and 2 Poles, 10,000 AIC
Bolt-on Type BA: 10-30 Amperes, 1 and 2 Poles, 10,000 AIC
Cable-in Type QC: 10-30 Amperes, 1 and 2 Poles, 10,000 AIC

Switching Neutral QUICKLAG Breakers available in one- and two-pole configurations, plus neutral pole for applications in accordance with NEC 514-5, 240-22, and 380-2. A one-pole device takes two pole spaces, and a two-pole device takes three pole spaces.

QUICKLAG Type P Switching Neutral

QUICKLAG HID (High Intensity Discharge) Breakers

Plug-on Type HQP: 15-60 Amperes, 1 and 2 Poles, 10,000 AIC
Bolt-on Type BA: 15-60 Amperes, 1 and 2 Poles, 10,000 AIC
Cable-in Type QC: 15-60 Amperes, 1 and 2 Poles, 10,000 AIC

Breakers designed specifically for use with high intensity discharge (HID) lighting applications. (UL listed as standard lighting breakers.)

Molded Case Switches Non-Automatic QUICKLAG Molded Case Switch

Plug-on Type HQP: 50, 60,100 Amperes, 1, 2 and 3 Poles
Bolt-on Type BA: 50, 60,100 Amperes, 1, 2 and 3 Poles
Cable-in Type QC: 50, 60,100 Amperes, 1, 2 and 3 Poles

① All products UL and CSA listed.

Breaker Catalog Numbers

Continuous Ampere Rating 40°C	Catalog Number			
	1-Pole①	2-Pole①		3-Pole①
	120/240 Vac	120/240 Vac	240 Vac	240 Vac
QUICKLAG Type: HQP Switching Neutral Thermal-Magnetic Breakers				
10	HQP2010B	HQP3010B	–	–
15	HQP2015B	HQP3015B	–	–
20	HQP2020B	HQP3020B	–	–
25	HQP2025B	HQP3025B	–	–
30	HQP2030B	HQP3030B	–	–
QUICKLAG Type: BA Switching Neutral Thermal-Magnetic Breakers				
10	BAB2010C	BAB3010C	–	–
15	BAB2015C	BAB3015C	–	–
20	BAB2020C	BAB3020C	–	–
25	BAB2025C	BAB3025C	–	–
30	BAB2030C	BAB3030C	–	–
QUICKLAG Type: QC Switching Neutral Thermal-Magnetic Breakers				
10	QC2010B	QC3010B	–	–
15	QC2015B	QC3015B	–	–
20	QC2020B	QC3020B	–	–
25	QC2025B	QC3025B	–	–
30	QC2030B	QC3030B	–	–
QUICKLAG Type: HQP HID (High Intensity Discharge) Thermal-Magnetic Breakers				
15	HQP1015D	HQP2015D	–	–
20	HQP1020D	HQP2020D	–	–
25	HQP1025D	HQP2025D	–	–
30	HQP1030D	HQP2030D	–	–
35	HQP1035D	HQP2035D	–	–
40	HQP1040D	HQP2040D	–	–
50	HQP1050D	HQP2050D	–	–
60	HQP1060D	HQP2060D	–	–
QUICKLAG Type: BA HID (High Intensity Discharge) Thermal-Magnetic Breakers				
15	BAB1015D	BAB2015D	–	–
20	BAB1020D	BAB2020D	–	–
25	BAB1025D	BAB2025D	–	–
30	BAB1030D	BAB2030D	–	–
35	BAB1035D	BAB2035D	–	–
40	BAB1040D	BAB2040D	–	–
50	BAB1050D	BAB2050D	–	–
60	BAB1060D	BAB2060D	–	–
QUICKLAG Type: QC HID (High Intensity Discharge) Thermal-Magnetic Breakers				
15	QC1015D	QC2015D	–	–
20	QC1020D	QC2020D	–	–
25	QC1025D	QC2025D	–	–
30	QC1030D	QC2030D	–	–
35	QC1035D	QC2035D	–	–
40	QC1040D	QC2040D	–	–
50	QC1050D	QC2050D	–	–
60	QC1060D	QC2060D	–	–
QUICKLAG Type: HQP Non-Auto Molded Case Switches				
50	HQP1050N	–	HQP2050N	HQP3050N
60	HQP1060N	–	HQP2060N	HQP3060N
100	HQP1100N	–	HQP2100N	HQP3100N
QUICKLAG Type: BA Non-Auto Molded Case Switches				
50	BAB1050N	–	BAB2050N	BAB3050N
60	BAB1060N	–	BAB2060N	BAB3060N
100	BAB1100N	–	BAB2100N	BAB3100N
QUICKLAG Type: QC Non-Auto Molded Case Switches				
50	QC1050N	–	QC2050N	QC3050N
60	QC1060N	–	QC2060N	QC3060N
100	QC1100N	–	QC2100N	QC3100N

Shipping Data

Miniature Circuit Breaker	No. of Poles	Standard Carton Quantity	Approximate Carton Weight Lbs. (Kgs)	Approximate Standard Carton Dimensions Inches (mm)
QUICKLAG Types B, P, C – All	1	24	9.000 (4.09)	12.500 (317.50) x 7.500 (190.50) x 5.000 (127.00)
QUICKLAG Types B, P, C – All	2	12	9.000 (4.09)	12.500 (317.50) x 7.500 (190.50) x 5.000 (127.00)
QUICKLAG Types B, P, C – All	3	8	9.000 (4.09)	12.500 (317.50) x 7.500 (190.50) x 5.000 (127.00)
QUICKLAG Ground Fault				
Type P – All	1	20	11.000 (4.99)	12.500 (317.50) x 6.500 (165.10) x 5.000 (127.00)
Types B and C – All	1	20	11.000 (4.99)	12.500 (317.50) x 7.000 (177.80) x 5.500 (139.70)
Types P and B – All	2	5	5.000 (2.27)	12.500 (317.50) x 6.000 (152.40) x 4.500 (114.30)

QUICKLAG Industrial Circuit Breakers Accessories

Accessory Type①	Catalog Number	Description	Order in Multiples of
Handle Locks: Non-padlockable	**QL1NPL**	QUICKLAG Type P, B, C – 1 Pole	10
	QL23NPL	QUICKLAG Type P, B, C – 2, 3 Poles	10
Handle Locks: Padlockable	**QL1PL**	QUICKLAG Type P, B, C – 1 Pole	10
	QLPB123PL	QUICKLAG Type P, B – 1, 2, 3 Poles	10
	QC123PL	QUICKLAG Type C – 1, 2, 3 Poles	10
	QLGF12PL	Ground Fault Padlock Device Type P, B – 1, 2 Poles	10
Handle Tie	**QL1HT**	QUICKLAG Handle Tie - 1 Pole	100
Mounting Hardware	**QCFCLIP**	QUICKLAG Type C Face Mounting Clip	24
	QC1FP	QUICKLAG Type C Face Mounting Plate – 1 Pole	10
	QC2FP	QUICKLAG Type C Face Mounting Plate – 2 Poles	10
	QC3FP	QUICKLAG Type C Face Mounting Plate – 3 Poles	10
	QC1FPLOFF	QUICKLAG Type C Face Mounting Plate and Lock-off (Off Only) – 1 Pole	10
	QC2FPLOFF	QUICKLAG Type C Face Mounting Plate and Lock-off (Off Only) – 2 Pole	10
	QC3FPLOFF	QUICKLAG Type C Face Mounting Plate and Lock-off (Off Only) – 3 Pole	10
	QCBCLIP	QUICKLAG Type C Base Mounting Clamp	100
	QC6BP	QUICKLAG Base Mounting Plate – 6 Poles Total	10
	QC4CONB	QUICKLAG Type C Single Point Connector	10
	QCDINADAPT	QUICKLAG Type C DIN Rail Adapter	6
Dummy Breakers	**HQP1000**	QUICKLAG Type P	1
	BAB1000	QUICKLAG Type B	1
	QC1000	QUICKLAG Type C	1
	QC30SAMPLE	QUICKLAG Type C Clear Choice Breaker	4

QL1NPL

QL23NPL

QL1PL

QLPB123PL

QC123PL

QL1HT

QCFCLIP

QC1FP

QC2FP

QC3FP

QCBCLIP

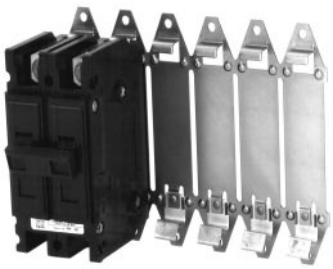
QC6BP

QC4CONB

QCDINADAPT

① See pages 7 and 8 for QCR and QCF accessories.

Factory Modifications①

Type of Modification	Breaker Types	Catalog Suffix
Shunt Trip (Requires 1 extra pole space on right side) 120, 208, 240 Vac 12, 24, 48 Vac/dc Draws 2.6A at 120V Draws 11A at 24Vdc	 QUICKLAG Types P, B and C QUICKLAG Types P, B and C	 S S1
Special Calibration (50°C)	QUICKLAG Types P, B and C	V
Shock Testing	QUICKLAG Types P, B and C	L
Freeze Testing	QUICKLAG Types P, B and C	Y
Moisture-Fungus Treatment	QUICKLAG Types P, B, C and Ground Fault	F

Factory Installed Breaker Terminals

Breaker Type	Continuous Ampere Rating	Standard Line Terminal			Standard Load Terminal			Optional Terminals (20% List Price Adder)	
		Term Type	Wire Type	Wire Range	Term Type	Wire Type	Wire Range	Line	Load
QUICKLAG Type P HQP, QPHW, QHPX, QHPW	10 to 30 35 to 50 55 to 125	Plug-on female clips which mate with the bus stabs			A B C	Cu/Al Cu/Al Cu/Al	#14-#4 #14-#4 #8-1/0	N/A	C C –
QUICKLAG Ground Fault QPGF, QPHGF, QPGFEP, QPHGFEP	10 to 30 40	Plug-on female clips which mate with the bus stabs			A – 1-pole D – 2-pole D	Cu/Al Cu/Al Cu	#14-#4 #14-#8 #14-#8	N/A	C C –
QUICKLAG Type B BAB, QBHW, HBAX, HBAW	10 to 30 35 to 50 55 to 125	Extended tangs which bolt directly to the bus			A – 1- and 2- pole B – 3-pole C	Cu/Al Cu/Al Cu/Al	#14-#4 #14-#4 #8-1/0	N/A	C C –
QUICKLAG Ground Fault QBGF, QBHGF, QBGFEP, QBHGFEP	10 to 30 40	Extended tangs which bolt directly to the bus			A – 1-pole D – 2-pole D	Cu/Al Cu/Al Cu	#14-#4 #14-#8 #14-#8	N/A	N/A
QUICKLAG Type C QC, QCHW, QHCX, QHCW	10 to 20 25 to 60 70 to 100	E F G	Cu/Al Cu/Al Cu/Al	#14-#10	E B C	Cu/Al Cu/Al Cu/Al	#14-#10 #14-#4 #8-1/0	F, G E, G E	F, G, H E, F, G, H E, G, H
QUICKLAG QCR, QCF	10-55 60	A A	Cu/Al Cu	-#14 -#4	A A	Cu/Al Cu	#14 -#4	N/A	N/A
QUICKLAG Ground Fault QCGF, QCHGF, QCGFEP, QCHGFEP	10 to 20 25 to 50	E F	Cu/Al Cu/Al	#14-#10	A A	Cu/Al Cu/Al	#14-#4 #14-#4	F, G E, G	N/A

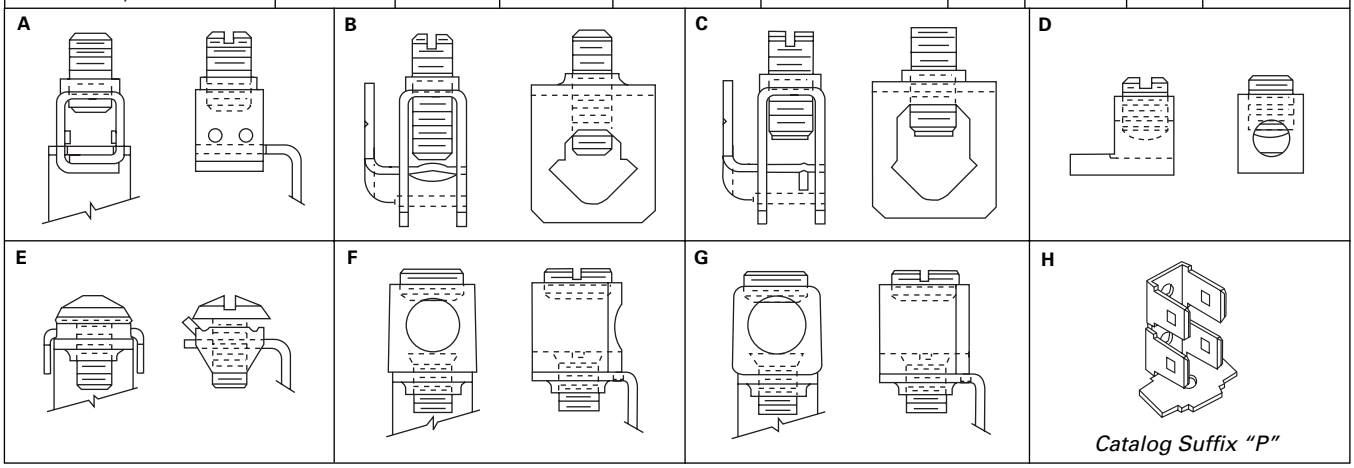

Spare Terminal Hardware Screws (Lugs not Included)

Catalog Number	Order in Multiples of	Terminal Type	Description
QLLDTSA	10	A	QUICKLAG Terminal Screw
QLLDTSB	10	B	QUICKLAG Terminal Screw
QLLDTSC	10	C	QUICKLAG Terminal Screw
QLBHTSE	10	E	QUICKLAG Binding Head Terminal Screw and Clamp
QLLNTSFG	10	F and G	QUICKLAG Terminal Screw

① Contact Cutler-Hammer for factory modifications available for QCR and QCF breakers.

Supplementary Protectors Current Limiting Type Cable-in/Cable-out DIN Rail

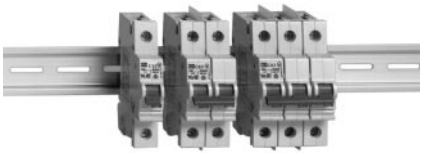

Description

UL 1077 Supplementary Protectors

Type SPCL Supplementary Protectors are IEC circuit breakers that are recognized by UL under UL 1077. They are intended for use as overcurrent protection within an appliance or electrical equipment where branch circuit protection (for example a UL listed Molded Case Circuit Breaker) has already been provided or is not required.

Equipment and Control Circuit Protection

These protectors are ideal for replacing fuses in control circuits. Applications include protecting motor control circuits, small control circuit transformers, relays, contactor coils, power supplies, PLC I/O points, appliances, and electronic equipment.

Product Features

The Type SPCL Supplementary Protectors are provided in light gray cases with charcoal gray handles.

DIN-Rail Mounting: A quick snap-on clip design allows easy installation on 35mm DIN Rail.

Current-Limiting Design: Fast short circuit interruption reduces let-through energy, reducing damage to the circuit.

Thermal-Magnetic Overcurrent Protection: Types B and C overcurrent curves provide maximum reliability and accuracy. Type B protection is normally used for low inrush applications. Type C protection is used for general purpose industrial applications that require higher inrush tolerance.

Center Trip Position: The breaker handle has a unique center trip "Reset" position that indicates an overcurrent trip. "Off" (O) and "On" (I) handle positions are visually indicated by red and green flags.

SPCL Specifications

Standards and Approvals	Number of Poles	Electrical Ratings			
		Continuous Current (Amperes)	Vac 50/60 Hz	Vdc	Ampere Interrupting Capacity
UL 1077 *File No. E162396*	1	0.5-63	120	12-65	10 kA
	2	0.5-63	240	12-130①	10 kA
CSA 22.2 *File No. LR105580-1*	3-4	0.5-63	240		10 kA
	1	0.5-63	277		6 kA
	2-4	0.5-63	480		5 kA
CE EN60898 VDE0660	1-4	0.5-63	240/415		10 kA
Overcurrent Curves	Overcurrent Curve Type B (3-5X) and Type C (5-10X) per VDE 0641, Part 11.				
Degree of Protection	IP20.				
Connecting Terminals	Suitable for Single-Core, Standard, and Flexible Conductors from #14 to #6 AWG (Cu). Recommended Torque is 27 Inch-Pounds.				

SPCL Supplementary Protector Catalog Numbers

Continuous Ampere Rating	Catalog Number			
	1-Pole	2-Pole	3-Pole	4-Pole
C Curve				
0.5	SPCL1C00Ⓢ	SPCL2C00Ⓢ	SPCL3C00Ⓢ	SPCL4C00Ⓞ
1	SPCL1C01Ⓢ	SPCL2C01Ⓢ	SPCL3C01Ⓢ	SPCL4C01Ⓞ
2	SPCL1C02Ⓢ	SPCL2C02Ⓢ	SPCL3C02Ⓢ	SPCL4C02Ⓞ
3	SPCL1C03Ⓢ	SPCL2C03Ⓢ	–	–
4	SPCL1C04Ⓢ	SPCL2C04Ⓢ	SPCL3C04Ⓢ	SPCL4C04Ⓞ
5	SPCL1C05Ⓢ	SPCL2C05Ⓢ	–	–
6	SPCL1C06Ⓢ	SPCL2C06Ⓢ	SPCL3C06Ⓢ	SPCL4C06Ⓞ
7	SPCL1C07Ⓢ	SPCL2C07Ⓢ	–	–
8	SPCL1C08Ⓢ	SPCL2C08Ⓢ	–	–
10	SPCL1C10Ⓢ	SPCL2C10Ⓢ	SPCL3C10Ⓢ	SPCL4C10Ⓞ
13	SPCL1C13Ⓢ	–	–	–
16	SPCL1C16Ⓢ	SPCL2C16Ⓢ	SPCL3C16Ⓢ	SPCL4C16Ⓞ
20	SPCL1C20Ⓢ	SPCL2C20Ⓢ	SPCL3C20Ⓢ	SPCL4C20Ⓞ
25	SPCL1C25Ⓢ	SPCL2C25Ⓢ	SPCL3C25Ⓢ	SPCL4C25Ⓞ
32	SPCL1C32Ⓢ	SPCL2C32Ⓢ	SPCL3C32Ⓢ	SPCL4C32Ⓞ
40	SPCL1C40Ⓢ	SPCL2C40Ⓢ	SPCL3C40Ⓢ	SPCL4C40Ⓞ
50	SPCL1C50Ⓢ	SPCL2C50Ⓢ	SPCL3C50Ⓢ	SPCL4C50Ⓞ
63	SPCL1C63Ⓢ	SPCL2C63Ⓢ	SPCL3C63Ⓢ	SPCL4C63Ⓞ
B Curve				
6	SPCL1B06Ⓢ	SPCL2B06Ⓞ	SPCL3B06Ⓞ	SPCL4B06Ⓞ
10	SPCL1B10Ⓢ	SPCL2B10Ⓞ	SPCL3B10Ⓞ	SPCL4B10Ⓞ
13	SPCL1B13	–	–	–
16	SPCL1B16Ⓢ	SPCL2B16Ⓞ	SPCL3B16Ⓞ	SPCL4B16Ⓞ
20	SPCL1B20Ⓢ	SPCL2B20Ⓞ	SPCL3B20Ⓞ	SPCL4B20Ⓞ
25	SPCL1B25Ⓢ	SPCL2B25Ⓞ	SPCL3B25Ⓞ	SPCL4B25Ⓞ
32	SPCL1B32Ⓢ	SPCL2B32Ⓞ	SPCL3B32Ⓞ	SPCL4B32Ⓞ
40	SPCL1B40Ⓢ	SPCL2B40Ⓞ	SPCL3B40Ⓞ	SPCL4B40Ⓞ
50	SPCL1B50Ⓞ	SPCL2B50Ⓞ	SPCL3B50Ⓞ	SPCL4B50Ⓞ
63	SPCL1B63Ⓞ	SPCL2B63Ⓞ	SPCL3B63Ⓞ	SPCL4B63Ⓞ

Shipping Data

	Packed in Cartons of:	Carton Dimensions Inches (mm)	Approximate Weight Lbs. (Kgs)
1-Pole Units	12	9.000 (228.60) x 4.000 (101.60) x 4.000 (101.60)	10.000 (4.54)
2-Pole Units	6	9.000 (228.60) x 4.000 (101.60) x 4.000 (101.60)	10.000 (4.54)
3-Pole Units	4	9.000 (228.60) x 4.000 (101.60) x 4.000 (101.60)	10.000 (4.54)
4-Pole Units	3	9.000 (228.60) x 4.000 (101.60) x 4.000 (101.60)	10.000 (4.54)

① 130 Vdc rating based on 2 poles connected in series.
Ⓢ Normally stocked.
Ⓞ Special order, contact Cutler-Hammer. Minimum quantities apply.

CE Mark

SPCL protectors carry the CE mark in accordance with Low Voltage Directive (LVD) (73/23/EEC)

SPCL Accessories

Auxiliary/Signal Switch Kit

Catalog Number SPCLUAUX is a field mountable switch kit that attaches to the left side of a SPCL Protector. It is field selectable to auxiliary or signal (bell alarm) configuration. The switch is UL and CSA approved for general purpose ratings of 6 ampere at 240 Vac or 1 ampere at 125 Vdc. Contacts are provided as indicated on the wiring diagram. Screw-type terminals are provided to accommodate up to #16 AWG wire. Recommended torque is approximately 13 inch-pounds.

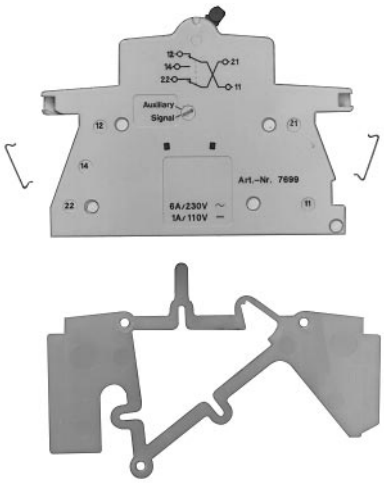

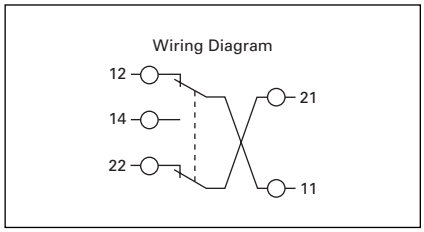

Contact Charts

Contacts	Auxiliary Switch Mode	
	Protector Open	Protector Closed
11 to 12	X	0
11 to 14	0	X
21 to 22	X	0

Contacts	Signal Switch Mode		
	Protector Open	Protector Closed	Protector Tripped
11 to 12	0	0	X
11 to 14	X	X	0
21 to 22	0	0	X

Technical Data

Rated Voltage:	230 Vac/110 Vdc
Rated Current:	6A Ac/1A Dc
Conductor Cross Section:	To 1.5 mm² (No 16 AWG)
Tightening Torque:	1 Nm (13 inch-pounds)
Product:	Catalog Number
Universal Auxiliary Switch:	**SPCLUAUX**

Figure 1

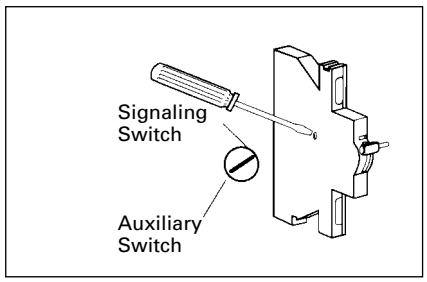

Figure 2

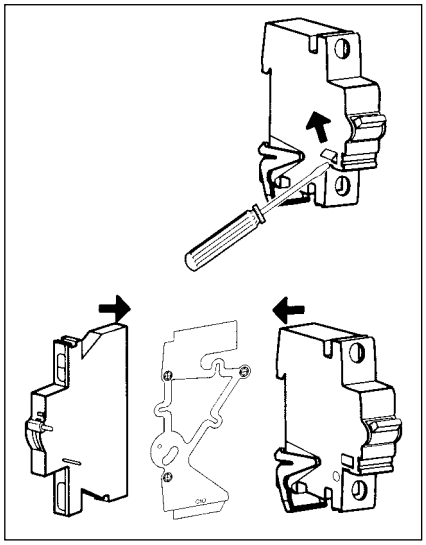

Figure 3

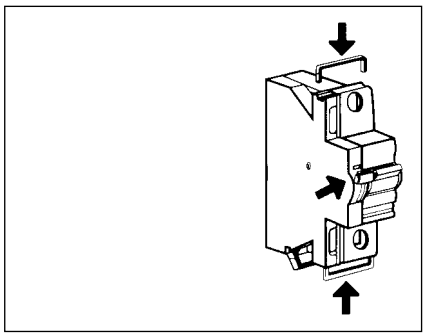

SPCL Accessories

Lock-off Devices

Lock-off Devices

Catalog Number	Description
SPCLPLDEV	Padlockable device, mounts on protector and includes provisions to accept catalog number SPCLOCKEY Padlock
SPCLOCKEY	Padlock with 3 keys

Bus Bar Systems

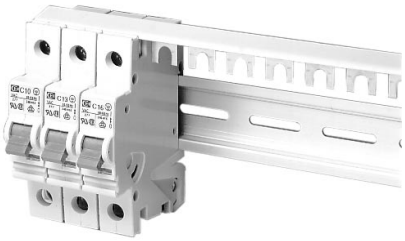

Bus Bar Systems

Catalog Number	Description
SPCLIPB10MM	Single-phase 240 Vac VDE approved Bus Bar, 1 meter in length, 10mm^2 density
SPCL1PB16MM	Single-phase 240 Vac VDE approved Bus Bar, 1 meter in length, 16mm^2 density

Maximum Bus Bar Current①

Conductor Density	End Connect	Center Connect
10 sq. mm	50 Amperes	100 Amperes
16 sq. mm	65 Amperes	130 Amperes

Finger Proofing Shield

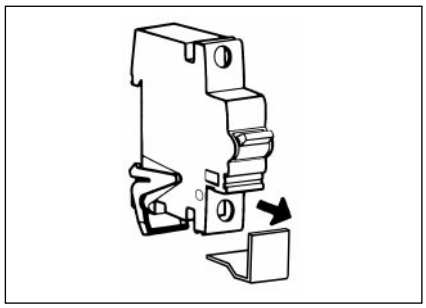

Finger Proofing Shield

Catalog Number	Description
SPCL2000	Clip-on finger proofing shield to enhance finger protection on SPCL protectors. Plastic finger proofing shield clips into upper or lower terminal poles as required.

① Per VDE 0606.

Description

UL 1077 Supplementary Protectors
Type SPHM Supplementary Protectors are IEC circuit breakers that are recognized by UL under UL 1077. They are intended for use as overcurrent protection within an appliance or electrical equipment where branch circuit protection (for example a UL listed Molded Case Circuit Breaker) has already been provided or is not required.

Equipment and Control Circuit Applications
These protectors are ideal for protecting motor control circuits, CPTs, relays, contactor coils, power supplies, PLC I/O points, lighting circuits, appliances, electronic equipment, and replacing fuses.

Product Features

The Type SPHM Supplementary Protectors are provided in light gray cases with charcoal gray handles. Handles are marked with "O" for "Off" and "I" for "On".

DIN Rail Mounting: Easy installation on 35mm DIN Rail. A spring loaded clip is provided for quick release from the DIN Rail mounting.

Heat-Induced Nuisance Tripping Eliminated: The protector is designed to "hold in" at 100% of continuous rated current regardless of ambient temperatures from -40 to +85°C.

Immediate Reset After Trip: The protector can be reset (closed) immediately after an overcurrent trip without a "cooling off" period.

Precise Overcurrent Calibration: The protector can be precisely calibrated to a wide variety of current ranges from 0.1 to 50 amperes continuous. For special ratings not shown, contact Cutler-Hammer.

Flexible Time-Characteristic Curves: Long, Medium, and Short Delay Curves are available. Long Delay are for special extended inrush, Medium for general purpose, and Short Delay for sensitive electronic applications.

1/2 Cycle High-Inrush Tolerance: The protector can be provided with tolerance to various levels of 1/2 cycle current spikes. General purpose tolerance is 8X the continuous current rating. Tolerance to 18X and 25X are also available.

Environmental, Vibration, and Shock Resistance: Mil-Spec qualification for fungus resistance, humidity, salt-spray resistance, and shock vibration resistance.

Integral Auxiliary Switch (Optional): One auxiliary switch contact (a or b) can be factory installed per protector pole. A separate pole for the contact is not required.

① One A or B contact maximum per pole. Contacts will be arranged left to right (e.g.,) BAB suffix on 3-pole breaker.
② Contact position when breaker in open condition. Contacts rated 10 amperes at 250 Vac.
③ UL recognized to 250 Vac, 5 kA above 30 amperes.
④ Maximum of 40 amperes available at 25X inrush.

Catalog Numbering System

S P H M 3 H M 0 0 3 0 _ _ _ _

Type

Supplementary Protector Hydraulic Magnetic

Poles

Code	Poles
1	1-Pole
2	2-Pole
3	3-Pole
4	4-Pole

Inrush

Code	Delay	Voltage
H	8X	50/60 Hz
R	18X	50/60 Hz
Y④	25X	50/60 Hz
J	8X	Dc
S	18X	Dc
Z④	25X	Dc
S	Switch	Dc, 50/60 Hz

Delay

Code	Delay	Curve
M	Medium	2
S	Short	3
L	Long	10
M	Medium	20
S	Short	30
L	Long	251
M	Medium	252
S	Short	253
M	Medium	2
S	Short	3
L	Long	10
M	Medium	20
S	Short	30
L	Long	251
M	Medium	252
S	Short	253
W	Switch	–

Current Rating

Code	Current③
00R1	0.10 Ampere
0R25	0.25 Ampere
0R50	0.50 Ampere
0R75	0.75 Ampere
0001	1 Ampere
02R5	2.5 Ampere
0005	5 Ampere
07R5	7.5 Ampere
0010	10 Ampere
0015	15 Ampere
0020	20 Ampere
0025	25 Ampere
0030	30 Ampere
0035③	35 Ampere
0040③	40 Ampere
0050③	50 Ampere

Auxiliary Switch

Code	Current
A①	Normally Open②
B①	Normally Closed②

General Specifications and Electrical Ratings

Standards and Approvals	Continuous Current Rating	Vac 50/60 Hz	Vdc	Interruption Cap Capacity RMS Symmetrical
UL 1077	0.1 to 30 Amperes	277/480		3 kA
	0.1 to 50 Amperes	250		5 kA
CSA 22.2	0.1 to 50 Amperes		80	5 kA
VDE 0660	0.1 to 50 Amperes	230/400		1.5 kA
IEC-380	0.1 to 50 Amperes		80	2 kA

Standards: UL Recognized under UL 1077, CSA Certified to CSA 22.2. Meets the requirements of IEC-380, IEC-435, IEC-601, VDE 0660, VDE 601, VDE 0730, VDE 0750, VDE 0804, VDE 0806

Inrush Tolerance: 8X (Standard), 18X, or 25X

Overcurrent Curves: Long Delay, Medium Delay, or Short Delay

Operating Temperature: -40 to +85°C

Wire Range: Breaker Terminals: 14-6 AWG Copper, 35-inch-lbs torque Auxiliary Switch Terminals: 16 AWG Copper, 3.5-inch-lbs torque

Auxiliary Switch: 10 Amperes at 250 Vac

Degree of Protection: IP-20

Supplementary Protectors Hydraulic Magnetic Type Cable-in/Cable-out DIN Rail

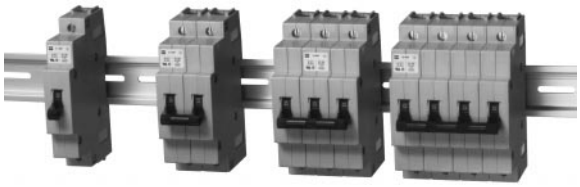

1-Pole *2-Pole* *3-Pole* *4-Pole*

SPHM Catalog Numbers

Continuous Current Rating (Amperes)	Catalog Number			
	8X (Standard Inrush Tolerance) Medium Delay Curve 2			
	1-Pole 277 Vac	2-Pole 277/480 Vac	3-Pole 277/480 Vac	4-Pole 277/480 Vac
0.1	SPHM1HM00R1Ⓢ	SPHM2HM00R1Ⓢ	SPHM3HM00R1Ⓞ	SPHM4HM00R1Ⓞ
0.25	SPHM1HM0R25Ⓢ	SPHM2HM0R25Ⓢ	SPHM3HM0R25Ⓞ	SPHM4HM0R25Ⓞ
0.50	SPHM1HM0R50Ⓢ	SPHM2HM0R50Ⓢ	SPHM3HM0R50Ⓞ	SPHM4HM0R50Ⓞ
0.75	SPHM1HM0R75Ⓢ	SPHM2HM0R75Ⓢ	SPHM3HM0R75Ⓞ	SPHM4HM0R75Ⓞ
1	SPHM1HM0001Ⓢ	SPHM2HM0001Ⓢ	SPHM3HM0001Ⓞ	SPHM4HM0001Ⓞ
2.5	SPHM1HM02R5Ⓢ	SPHM2HM02R5Ⓢ	SPHM3HM02R5Ⓞ	SPHM4HM02R5Ⓞ
5.0	SPHM1HM0005Ⓢ	SPHM2HM0005Ⓢ	SPHM3HM0005Ⓢ	SPHM4HM0005Ⓢ
7.5	SPHM1HM07R5Ⓢ	SPHM2HM07R5Ⓢ	SPHM3HM07R5Ⓢ	SPHM4HM07R5Ⓢ
10	SPHM1HM0010Ⓢ	SPHM2HM0010Ⓢ	SPHM3HM0010Ⓢ	SPHM4HM0010Ⓢ
15	SPHM1HM0015Ⓢ	SPHM2HM0015Ⓢ	SPHM3HM0015Ⓢ	SPHM4HM0015Ⓢ
20	SPHM1HM0020Ⓢ	SPHM2HM0020Ⓢ	SPHM3HM0020Ⓢ	SPHM4HM0020Ⓢ
25	SPHM1HM0025Ⓢ	SPHM2HM0025Ⓢ	SPHM3HM0025Ⓢ	SPHM4HM0025Ⓢ
30	SPHM1HM0030Ⓢ	SPHM2HM0030Ⓢ	SPHM3HM0030Ⓢ	SPHM4HM0030Ⓢ
Continuous Current Rating (Amperes)	8X (Standard Inrush Tolerance) Medium Delay Curve 2			
	1-Pole 250 Vac	2-Pole 250 Vac	3-Pole 250 Vac	4-Pole 250 Vac
35	SPHM1HM0035Ⓢ	SPHM2HM0035Ⓢ	SPHM3HM0035Ⓢ	SPHM4HM0035Ⓢ
40	SPHM1HM0040Ⓢ	SPHM2HM0040Ⓢ	SPHM3HM0040Ⓢ	SPHM4HM0040Ⓢ
50	SPHM1HM0050Ⓢ	SPHM2HM0050Ⓢ	SPHM3HM0050Ⓢ	SPHM4HM0050Ⓢ
Continuous Current Rating (Amperes)	18X (High Inrush Tolerance) Medium Delay Curve 20			
	1-Pole 277 Vac	2-Pole 277/480 Vac	3-Pole 277/480 Vac	4-Pole 277/480 Vac
0.1	SPHM1RM00R1Ⓢ	SPHM2RM00R1Ⓢ	SPHM3RM00R1Ⓞ	SPHM4RM00R1Ⓞ
0.25	SPHM1RM0R25Ⓢ	SPHM2RM0R25Ⓢ	SPHM3RM0R25Ⓞ	SPHM4RM0R25Ⓞ
0.50	SPHM1RM0R50Ⓢ	SPHM2RM0R50Ⓢ	SPHM3RM0R50Ⓞ	SPHM4RM0R50Ⓞ
0.75	SPHM1RM0R75Ⓢ	SPHM2RM0R75Ⓢ	SPHM3RM0R75Ⓞ	SPHM4RM0R75Ⓞ
1	SPHM1RM0001Ⓢ	SPHM2RM0001Ⓢ	SPHM3RM0001Ⓞ	SPHM4RM0001Ⓞ
2.5	SPHM1RM02R5Ⓢ	SPHM2RM02R5Ⓢ	SPHM3RM02R5Ⓞ	SPHM4RM02R5Ⓞ
5	SPHM1RM0005Ⓢ	SPHM2RM0005Ⓢ	SPHM3RM0005Ⓢ	SPHM4RM0005Ⓢ
7.5	SPHM1RM07R5Ⓢ	SPHM2RM07R5Ⓢ	SPHM3RM07R5Ⓢ	SPHM4RM07R5Ⓢ
10	SPHM1RM0010Ⓢ	SPHM2RM0010Ⓢ	SPHM3RM0010Ⓢ	SPHM4RM0010Ⓢ
15	SPHM1RM0015Ⓢ	SPHM2RM0015Ⓢ	SPHM3RM0015Ⓢ	SPHM4RM0015Ⓢ
20	SPHM1RM0020Ⓢ	SPHM2RM0020Ⓢ	SPHM3RM0020Ⓢ	SPHM4RM0020Ⓢ
25	SPHM1RM0025Ⓢ	SPHM2RM0025Ⓢ	SPHM3RM0025Ⓢ	SPHM4RM0025Ⓢ
30	SPHM1RM0030Ⓢ	SPHM2RM0030Ⓢ	SPHM3RM0030Ⓢ	SPHM4RM0030Ⓢ
Continuous Current Rating (Amperes)	18X (High Inrush Tolerance) Medium Delay Curve 20			
	1-Pole 250 Vac	2-Pole 250 Vac	3-Pole 250 Vac	4-Pole 250 Vac
35	SPHM1RM0035Ⓢ	SPHM2RM0035Ⓢ	SPHM3RM0035Ⓢ	SPHM4RM0035Ⓢ
40	SPHM1RM0040Ⓢ	SPHM2RM0040Ⓢ	SPHM3RM0040Ⓢ	SPHM4RM0040Ⓢ
50	SPHM1RM0050Ⓢ	SPHM2RM0050Ⓢ	SPHM3RM0050Ⓢ	SPHM4RM0050Ⓢ

Shipping Data

	Shipped in Cartons of:	Carton Dimensions Inches (mm)	Approx. Weight Lbs. (Kgs)
1-Pole Units	12	10.500 (266.70) x 4.125 (104.78) x 4.500 (114.30)	15.000 (6.81)
2-Pole Units	6	10.500 (266.70) x 4.125 (104.78) x 4.500 (114.30)	15.000 (6.81)
3-Pole Units	4	10.500 (266.70) x 4.125 (104.78) x 4.500 (114.30)	15.000 (6.81)
4-Pole Units	3	10.500 (266.70) x 4.125 (104.78) x 4.500 (114.30)	15.000 (6.81)

Ⓢ Normally stocked.
Ⓞ Special order, contact Cutler-Hammer. Minimum quantities apply. Contact Cutler-Hammer for price and availability for 400 Hz, Dc, Auxiliary Switch, and other catalog number combinations not shown.

- All two- and three-pole circuit breakers are of the common trip type. On all 3-phase Delta (240V) Grounded B phase applications, refer to Cutler-Hammer.
- Single-pole circuit breakers, 15 and 20 amperes. Switching duty rated (SWD) for fluorescent lighting applications.
- All G-frame circuit breakers are suitable for reverse feed use.
- HACR rated.

Interrupting Capacity Ratings

UL489 Interrupting Capacity Ratings

Circuit Breaker Type	Number of Poles	Interrupting Capacity (Symmetrical Amperes) (kA)						Page Number
		Volts Ac (50/60 Hz)				Volts Dc		
		120	240	277	480	125	250①②	
GD	3	–	65	–	22	–	10	26

Circuit Breaker Type	Number of Poles	Interrupting Capacity (Symmetrical Amperes) (kA)						Page Number
		Volts Ac (50/60 Hz)				Volts Dc		
		120	240	277	480Y/277	125	125/250	
GB	1	65	–	–	–	14③	–	27
	2, 3	–	65	–	–	–	14	27
GHB	1	65	–	14	–	14③	–	27
	2, 3	–	65	–	14	–	14	27
GC	1	65	–	–	–	14③	–	28
	2, 3	–	65	–	–	–	14	28
GHC	1	65	–	14	–	14③	–	28
	2, 3	–	65	–	14	–	14	28

Catalog Numbering System

This information is presented only as an aid to understanding catalog numbers. It is not to be used to build catalog numbers for circuit breakers or trip units.

Circuit Breaker/Frame Catalog Number

GD 3 100

Circuit Breaker Type	Number of Poles	Trip Amperes	Suffix
GD	1: 1 Pole	15	K: Molded Case Switch
GB	2: 2 Pole	20	D: Ring Type Terminals
GHB	3: 3 Pole	24	C: Steel Collars
GC		30	V: 50°C
GHC		35	J01: Fungus Proofed
		40	R01: Shock Tested
		45	F01: Freeze Tested
		50	
		60	
		70	
		80	
		90	
		100	

Terminal Types

For line and load-side. Terminals are UL listed as suitable for wire type and size given below.

Circuit Breaker Amperes	Terminal Type Material	Screw Head Type	Wire Type	AWG Wire Range	Metric Wire④ Range (mm^2)
Standard					
15-20	Clamp (Plated Steel)	Slotted	Cu/Al	#14-10	2.5-4
25-100	Pressure (Aluminum Body)	Slotted	Cu/Al	#10-1/0	4-50
Optional					
15-50	Pressure (Steel Body)	Slotted	Cu	–	–

① Two poles of 3-pole circuit breaker.
② Time constant is 8 milliseconds minimum.
③ 15 through 70A breakers only.
④ Not UL listed sizes.

Typical Series C G-Frame Circuit Breaker

Type GD Thermal-Magnetic Circuit Breakers with Non-Interchangeable Trip-Units

Maximum Continuous Ampere Rating @ 40°C	480 Vac Maximum, 250 Vdc①	Catalog Number (Includes binding head screws)
	22 kAIC @ 480 Vac	
	Catalog Number (Includes Line and Load Terminals)	
3-Pole		
15	GD3015	GD3015D
20	GD3020	GD3020D
25	GD3025	GD3025D
30	GD3030	GD3030D
35	GD3035	GD3035D
40	GD3040	GD3040D
45	GD3045	GD3045D
50	GD3050	GD3050D
60	GD3060	GD3060D
70	GD3070	GD3070D
80	GD3080	GD3080D
90	GD3090	GD3090D
100	GD3100	GD3100D

Instruction Leaflet/FRED Number 29C102

Molded Case Switches

Maximum Continuous Ampere Rating @ 40°C	480 Vac Maximum, 250 Vdc
	Catalog Number (Includes Line and Load Terminals)
3-Pole	
60	GD3060K
100	GD3100K

Instruction Leaflet/FRED Number 29C102

Types GB and GHB Bolt-On Panelboard Circuit Breakers

Typical GB

These breakers meet the requirements of Federal Specification W-C-375b as follows:

Types GB, GHB, 120 and 240 Volts:
1 Pole: Class 11a.
2, 3 Poles: Classes 10b, 11b, 12b, 14b, 15b

Type GHB, 277 and 480Y/277 Volts:
1 Pole: Classes 12c, 13a
2, 3 Poles: Class 13b

Type GB Thermal-Magnetic Circuit Breakers with Non-Interchangeable Trip Units

Continuous Ampere Rating @ 40°C	120 Vac Maximum, 125 Vdc Maximum①	240 Vac Maximum, 125/250 Vdc Maximum	240 Vac Maximum, 125/250 Vdc Maximum②
	1-Pole	2-Pole	3-Pole
	Catalog Number		
15	GB1015③	GB2015③	GB3015③
20	GB1020③	GB2020③	GB3020③
25	GB1025	GB2025	GB3025
30	GB1030	GB2030	GB3030
35	GB1035	GB2035	GB3035
40	GB1040	GB2040	GB3040
45	GB1045	GB2045	GB3045
50	GB1050	GB2050	GB3050
60	GB1060	GB2060	GB3060
70	GB1070	GB2070	GB3070
80	GB1080	GB2080	GB3080
90	GB1090	GB2090	GB3090
100	GB1100	GB2100	GB3100

Type GHB Thermal-Magnetic Circuit Breakers with Non-Interchangeable Trip Units④

Continuous Ampere Rating @ 40°C	277/480 Vac Maximum, 125 Vdc Maximum①	277/480 Vac Maximum, 125/250 Vdc Maximum	277/480 Vac Maximum, 125/250 Vdc Maximum②
	1-Pole	2-Pole	3-Pole
	Catalog Number		
15	GHB1015③	GHB2015③	GHB3015③
20	GHB1020③	GHB2020③	GHB3020③
25	GHB1025	GHB2025	GHB3025
30	GHB1030	GHB2030	GHB3030
35	GHB1035	GHB2035	GHB3035
40	GHB1040	GHB2040	GHB3040
45	GHB1045	GHB2045	GHB3045
50	GHB1050	GHB2050	GHB3050
60	GHB1060	GHB2060	GHB3060
70	GHB1070	GHB2070	GHB3070
80	GHB1080	GHB2080	GHB3080
90	GHB1090	GHB2090	GHB3090
100	GHB1100	GHB2100	GHB3100

Instruction Leaflet/FRED Number 15547

Type GHBGFEP Bolt-on Panelboard 30mA Industrial Ground Fault Circuit Protectors

15-60 Amperes, 277 Volt, 50/60 Hz

Single Phase (Requires 2 Poles)

These circuit breakers meet the requirements of UL489 and UL1053.

Operational voltage 240V to 305V.

Interrupting Capacity Ratings

Circuit Breaker Type	Number of Poles	Interrupting Capacity (Symmetrical Amperes)
		277 Volts Ac (50/60 Hz)
GHBGFEP	2	14,000

Type GHBGFEP Bolt-on Panelboard 30mA Industrial Ground Fault Circuit Protectors with Non-Interchangeable Trip Units

Continuous Ampere Rating @ 40°C	One Phase (Requires 2 Poles) 277V, 30mA
	Catalog Number
15	GHBGFEP1015
20	GHBGFEP1020
30	GHBGFEP1030
40	GHBGFEP1040
50	GHBGFEP1050
60	GHBGFEP1060

Instruction Leaflet/FRED Number 29C193

① 15 through 70 ampere circuit breakers only.
② Use (2) outside poles.
③ Uses .190-32 screw type clamp terminals.
④ 480Y/277V, circuit breakers (Type GHB) not suitable for 3-phase Delta (480V).

Types GC and GHC Circuit Breakers

15-100 Amperes, 120, 240, 277, 480Y/277V, 50/60 Hz, 125, 125/250 Vdc, 1, 2, and 3 Poles

Typical GC

These breakers meet the requirements of Federal Specification W-C-37b as follows:

Types GC, 120 and 240 Volts:
1 Pole: Class 11a
2, 3 Poles: Classes 10b, 11b, 12b, 14b, 15b

Type GHC, 277 and 480Y/277 Volts:
1 Pole: Classes 12c, 13a
2, 3 Poles: Class 13b

Type GC Thermal-Magnetic Circuit Breakers with Non-Interchangeable Trip Units

Continuous Ampere Rating @ 40°C	240 Vac Maximum, 125 Vdc Maximum①	240 Vac Maximum, 125/250 Vdc Maximum	240 Vac Maximum, 125/250 Vdc Maximum②
	1-Pole	2-Pole	3-Pole
	Catalog Number		
15	GC1015③	GC2015③	GC3015③
20	GC1020③	GC2020③	GC3020③
25	GC1025	GC2025	GC3025
30	GC1030	GC2030	GC3030
35	GC1035	GC2035	GC3035
40	GC1040	GC2040	GC3040
45	GC1045	GC2045	GC3045
50	GC1050	GC2050	GC3050
60	GC1060	GC2060	GC3060
70	GC1070	GC2070	GC3070
80	GC1080	GC2080	GC3080
90	GC1090	GC2090	GC3090
100	GC1100	GC2100	GC3100

Type GHC Thermal-Magnetic Circuit Breakers with Non-Interchangeable Trip Units

Continuous Ampere Rating @ 40°C	277 Vac Maximum, 125 Vdc Maximum①	480Y/277 Vac Maximum, 125/250 Vdc Maximum	480Y/277 Vac Maximum, 125/250 Vdc Maximum②
	1-Pole	2-Pole	3-Pole
	Catalog Number		
15	GHC1015③	GHC2015③	GHC3015③
20	GHC1020③	GHC2020③	GHC3020③
25	GHC1025	GHC2025	GHC3025
30	GHC1030	GHC2030	GHC3030
35	GHC1035	GHC2035	GHC3035
40	GHC1040	GHC2040	GHC3040
45	GHC1045	GHC2045	GHC3045
50	GHC1050	GHC2050	GHC3050
60	GHC1060	GHC2060	GHC3060
70	GHC1070	GHC2070	GHC3070
80	GHC1080	GHC2080	GHC3080
90	GHC1090	GHC2090	GHC3090
100	GHC1100	GHC2100	GHC3100

Instruction Leaflet/FRED Number 15548

Type GHCGFEP Cable In/Cable Out 30mA Industrial Ground Fault Circuit Protectors

15-60 Amperes, 277 Volt, 50/60 Hz

Single Phase Requires 2 Poles)

These circuit breakers meet the requirements of UL489 and UL1053.

Operational voltage 240V to 305V.

Interrupting Capacity Ratings

Circuit Breaker Type	Number of Poles	Interrupting Capacity (Symmetrical Amperes)
		277 Volts Ac (50/60 Hz)
GHCGFEP	2	14,000

Type GHBGFEP Bolt-on Panelboard 30mA Industrial Ground Fault Circuit Protectors with Non-Interchangeable Trip Units

Continuous Ampere Rating @ 40°C	One Phase (Requires 2 Poles) 277V, 30mA
	Catalog Number
15	GHBGFEP1015
20	GHBGFEP1020
30	GHBGFEP1030
40	GHBGFEP1040
50	GHBGFEP1050
60	GHBGFEP1060

Instruction Leaflet/FRED Number 29C193

① 15 through 70 ampere circuit breakers only.
② Use (2) outside poles.
③ Uses .190-32 screw type clamp terminals.

Special Purpose Breakers

These are Types GC and GHC circuit breakers with binding head screw-type terminals on line and load side. These circuit breakers with screw-type terminals (.190-32) will be marked "Special purpose breaker not for general use." To order this special breaker, use the catalog number below.

Type GC Thermal-Magnetic Circuit Breakers with Non-Interchangeable Trip Units

Continuous Ampere Rating @ 40°C	120 Vac Maximum, 125 Vdc Maximum	240 Vac Maximum, 125/250 Vdc Maximum	240 Vac Maximum, 125/250 Vdc Maximum①
	1-Pole	2-Pole	3-Pole
	Catalog Number		
25	GC1025D	GC2025D	GC3025D
30	GC1030D	GC2030D	GC3030D
35	GC1035D	GC2035D	GC3035D
40	GC1040D	GC2040D	GC3040D
45	GC1045D	GC2045D	GC3045D
50	GC1050D	GC2050D	GC3050D
55	GC1055D	GC2055D	GC3055D
60	GC1060D	GC2060D	GC3060D

Type GHC Thermal-Magnetic Circuit Breakers with Non-Interchangeable Trip Units

Continuous Ampere Rating @ 40°C	277 Vac Maximum, 125 Vdc Maximum	480Y/277 Vac Maximum, 125/250 Vdc Maximum	480Y/277 Vac Maximum, 125/250 Vdc Maximum①
	1-Pole	2-Pole	3-Pole
	Catalog Number		
25	GHC1025D	GHC2025D	GHC3025D
30	GHC1030D	GHC2030D	GHC3030D
35	GHC1035D	GHC2035D	GHC3035D
40	GHC1040D	GHC2040D	GHC3040D
45	GHC1045D	GHC2045D	GHC3045D
50	GHC1050D	GHC2050D	GHC3050D
55	GHC1055D	GHC2055D	GHC3055D
60	GHC1060D	GHC2060D	GHC3060D

Instruction Leaflet/FRED Number 15548

① Use (2) outside poles.

Dimensions/Weights

Dimensions, Inches (mm)

Number of Poles	Width	Height	Depth
1	1.0 (25.33)	4.88 (123.95)	2.81 (71.41)
2	2.0 (50.78)	4.88 (123.95)	2.81 (71.41)
3	3.0 (76)	4.88 (123.95)	2.81 (71.41)

Approximate Shipping Weight, Lbs. (kg)

Breaker Type	Number of Poles		
	1	2	3
GD	1.0 (.454)	1.5 (.680)	2.25 (1.021)
GHBGFEP	–	1.2 (.545)	–
GHCGFEP	–	1.1 (.499)	–
GB/GHC	Carton Quantity		
	24	12	8
	16 (7.264)	16 (7.264)	16 (7.264)
GC/GHC	Carton Quantity		
	24	12	8
	18 (8.172)	18 (8.172)	18 (8.172)

Accessories

Internal

Alarm Switch 139
Auxiliary Switch. 142
Shunt Trip 147
Undervoltage Release Mechanism 153

External

Base Mounting Hardware 163
Base Mounting Plate 167
DIN Rail Adapter 167
Key Operated Attachment. 167
Lock Dog (non-padlockable) 168
Padlockable Handle 168
Handle Mechanisms 180

Typical Series C F-Frame Breaker

- All Series C F-frame circuit breakers are HACR rated.
- All circuit breakers 10 through 50 amperes are suitable for HID (high intensity discharge) use.
- All F-frame circuit breakers are suitable for reverse feed use.

Interrupting Capacity Ratings

UL489 Interrupting Capacity Ratings

Circuit Breaker Type	Number of Poles	Interrupting Capacity (Symmetrical Amperes) (kA)						Page Number
		Volts Ac (50/60 Hz)				Volts Dc①		
		240	277	480	600	125	250②③	
ED	2, 3	65	–	–	–	10	–	32
EDH	2, 3	100	–	–	–	10	–	32
EDC	2, 3	200	–	–	–	10	–	32
EHD	1	–	14	–	–	10	–	32
	2, 3	18	–	14	–	–	10	32
FDB	2, 3, 4	18	–	14	14	–	10	32
FD	1	–	25	–	–	10	–	32
	2, 3, 4	65	–	25	18	–	10	32
HFD	1	–	65	–	–	10	–	33
	2, 3, 4	100	–	65	25	–	22	33
FDC	2, 3, 4	200	–	100	35	–	22	33

IEC 157-1 (P1) Interrupting Capacity Ratings (P1)

Circuit Breaker Type	Number of Poles	Interrupting Capacity (Symmetrical Amperes) (kA)						Page Number
		Volts Ac (50/60 Hz)				Volts Dc①		
		220, 240	380, 415	440	500	125	250②③	
ED	2, 3	65	–	–	–	10	–	32
EDH	2, 3	100	–	–	–	10	–	32
EDC	2, 3	200	–	–	–	10	–	32
FDB	2, 3, 4	18	14	14	14	–	10	32
FD	1	25	–	–	–	10	–	32
	2, 3, 4	65	35	35	18	–	10	32
HFD	1	65	–	–	–	10	–	33
	2, 3, 4	100	65	65	25	–	22	33
FDC	2, 3, 4	200	100	100	35	–	22	33

① Dc ratings apply to substantially non-inductive circuits.
② 2-pole circuit breaker, or two poles of 3-pole circuit breaker.
③ Time constant is 3 milliseconds minimum at 10 kA and 8 milliseconds minimum at 22 kA.

Types ED, EDH, and EDC Thermal-Magnetic Circuit Breakers with Non-Interchangeable Trip Units Suitable for Reverse Feed

Maximum Continuous Ampere Rating @ 40°C	240 Vac Maximum, 125 Vdc					
	65 kAIC @ 240 Vac		100 kAIC @ 240 Vac		200 kAIC @ 240 Vac	
	Type ED		Type EDH		Type EDC Current Limiting	
	2-Pole	3-Pole	2-Pole	3-Pole	2-Pole	3-Pole
	Catalog Number (Includes Terminals on Load End Only)					
100	ED2100	ED3100	EDH2100	EDH3100	EDC2100	EDC3100
125	ED2125	ED3125	EDH2125	EDH3125	EDC2125	EDC3125
150	ED2150	ED3150	EDH2150	EDH3150	EDC2150	EDC3150
175	ED2175	ED3175	EDH2175	EDH3175	EDC2175	EDC3175
200	ED2200	ED3200	EDH2200	EDH3200	EDC2200	EDC3200
225	ED2225	ED3225	EDH2225	EDH3225	EDC2225	EDC3225

Instruction Leaflet/FRED Number 29C101

Type EHD Thermal-Magnetic Circuit Breakers with Non-Interchangeable Trip Units

Maximum Continuous Ampere Rating @ 40°C	277 Vac Maximum, 125 Vdc	480 Vac Maximum, 250 Vdc	
	14 kAIC @ 277 Vac	14 kAIC @ 480 Vac	
	Type EHD		
	1-Pole	2-Pole	3-Pole
	Catalog Number (Includes Terminals on Load End Only)		
10①	EHD1010	EHD2010	EHD3010
15	EHD1015②	EHD2015	EHD3015
20	EHD1020②	EHD2020	EHD3020
25	EHD1025	EHD2025	EHD3025
30	EHD1030	EHD2030	EHD3030
35	EHD1035	EHD2035	EHD3035
40	EHD1040	EHD2040	EHD3040
45	EHD1045	EHD2045	EHD3045
50	EHD1050	EHD2050	EHD3050
60	EHD1060	EHD2060	EHD3060
70	EHD1070	EHD2070	EHD3070
80	EHD1080	EHD2080	EHD3080
90	EHD1090	EHD2090	EHD3090
100	EHD1100	EHD2100	EHD3100

Instruction Leaflet/FRED Number 29C101

Type FD Thermal-Magnetic Circuit Breakers with Non-Interchangeable Trip Units

Maximum Continuous Ampere Rating @ 40°C	600 Vac Maximum, 250 Vdc			277 Vac Maximum, 125 Vdc	600 Vac Maximum, 250 Vdc		
	14 kAIC @ 600 Vac			25 kAIC @ 277 Vac	25 kAIC @ 480 Vac		
	Type FDB			Type FD			
	2-Pole	3-Pole	4-Pole	1-Pole	2-Pole	3-Pole	4-Pole
	Catalog Number (Includes Terminals on Load End Only)						
10①	FDB2010	FDB3010	FDB4010	FD1010	–	–	–
15	FDB2015	FDB3015	FDB4015	FD1015②	FD2015	FD3015	FD4015
20	FDB2020	FDB3020	FDB4020	FD1020②	FD2020	FD3020	FD4020
25	FDB2025	FDB3025	FDB4025	FD1025	FD2025	FD3025	FD4025
30	FDB2030	FDB3030	FDB4030	FD1030	FD2030	FD3030	FD4030
35	FDB2035	FDB3035	FDB4035	FD1035	FD2035	FD3035	FD4035
40	FDB2040	FDB3040	FDB4040	FD1040	FD2040	FD3040	FD4040
45	FDB2045	FDB3045	FDB4045	FD1045	FD2045	FD3045	FD4045
50	FDB2050	FDB3050	FDB4050	FD1050	FD2050	FD3050	FD4050
60	FDB2060	FDB3060	FDB4060	FD1060	FD2060	FD3060	FD4060
70	FDB2070	FDB3070	FDB4070	FD1070	FD2070	FD3070	FD4070
80	FDB2080	FDB3080	FDB4080	FD1080	FD2080	FD3080	FD4080
90	FDB2090	FDB3090	FDB4090	FD1090	FD2090	FD3090	FD4090
100	FDB2100	FDB3100	FDB4100	FD1100	FD2100	FD3100	FD4100
110	FDB2110	FDB3110	FDB4110	FD1110	FD2110	FD3110	FD4110
125	FDB2125	FDB3125	FDB4125	FD1125	FD2125	FD3125	FD4125
150	FDB2150	FDB3150	FDB4150	FD1150	FD2150	FD3150	FD4150
175	–	–	–	–	FD2175	FD3175	FD4175
200	–	–	–	–	FD2200	FD3200	FD4200
225	–	–	–	–	FD2225	FD3225	FD4225

Instruction Leaflet/FRED Number 29C101

① Not UL listed. 5 kAIC interrupting rating.
② UL listed for SWD applications, see NEC Article 240-83 (d).

Types HFD and FDC Thermal-Magnetic Circuit Breakers with Non-Interchangeable Trip Units

Maximum Continuous Ampere Rating @ 40°C	600 Vac Maximum, 250 Vdc	277 Vac Maximum, 125 Vdc			600 Vac Maximum, 250 Vdc		
	65 kAIC @ 277 Vac	65 kAIC @ 480 Vac			100 kAIC @ 480 Vac		
	Type HFD				Type FDC Current Limiting		
	1-Pole	2-Pole	3-Pole	4-Pole	2-Pole	3-Pole	4-Pole
	Catalog Number (Includes Terminals on Load End Only)						
15	HFD1015	HFD2015	HFD3015	HFD4015	FDC2015	FDC3015	FDC4015
20	HFD1020	HFD2020	HFD3020	HFD4020	FDC2020	FDC3020	FDC4020
25	HFD1025	HFD2025	HFD3025	HFD4025	FDC2025	FDC3025	FDC4025
30	HFD1030	HFD2030	HFD3030	HFD4030	FDC2030	FDC3030	FDC4030
35	HFD1035	HFD2035	HFD3035	HFD4035	FDC2035	FDC3035	FDC4035
40	HFD1040	HFD2040	HFD3040	HFD4040	FDC2040	FDC3040	FDC4040
45	HFD1045	HFD2045	HFD3045	HFD4045	FDC2045	FDC3045	FDC4045
50	HFD1050	HFD2050	HFD3050	HFD4050	FDC2050	FDC3050	FDC4050
60	HFD1060	HFD2060	HFD3060	HFD4060	FDC2060	FDC3060	FDC4060
70	HFD1070	HFD2070	HFD3070	HFD4070	FDC2070	FDC3070	FDC4070
80	HFD1080	HFD2080	HFD3080	HFD4080	FDC2080	FDC3080	FDC4080
90	HFD1090	HFD2090	HFD3090	HFD4090	FDC2090	FDC3090	FDC4090
100	HFD1100	HFD2100	HFD3100	HFD4100	FDC2100	FDC3100	FDC4100
110	HFD1110	HFD2110	HFD3110	HFD4110	FDC2110	FDC3110	FDC4110
125	HFD1125	HFD2125	HFD3125	HFD4125	FDC2125	FDC3125	FDC4125
150	HFD1150	HFD2150	HFD3150	HFD4150	FDC2150	FDC3150	FDC4150
175	–	HFD2175	HFD3175	HFD4175	FDC2175	FDC3175	FDC4175
200	–	HFD2200	HFD3200	HFD4200	FDC2200	FDC3200	FDC4200
225	–	HFD2225	HFD3225	HFD4225	FDC2225	FDC3225	FDC4225

Instruction Leaflet/FRED Number 29C101

Molded Case Switches

Molded case switches are used as compact switches in applications requiring high current switching capabilities. Molded case switches are constructed of circuit breaker components and are of the high instantaneous automatic type. Molded case switches are listed in accordance with Underwriters Laboratories, Inc., Standard UL 1087.

Maximum Continuous Ampere Rating @ 40°C	480 Vac Maximum, 250 Vdc	600 Vac Maximum, 250 Vdc
	Complete Circuit Breaker with Load Side Terminals Only	Complete Circuit Breaker with Load Side Terminals Only
	Catalog Number	
2-Pole		
100	EHD2100K	FD2100K
150	–	FD2150K
225	–	FD2225K
3-Pole		
100	EHD3100K	FD3100K
150	–	FD3150K
225	–	FD3225K
4-Pole		
100	–	FD4100K
150	–	FD4150K
225	–	FD4225K

Note: Molded Case Switches may open above 1800 amperes.

Instruction Leaflet/FRED Number 29C101

Line and Load Terminals

Line and load terminals provide wire connecting capabilities for specific ranges of continuous current ratings and wire types. Except as noted, terminals comply with Underwriters Laboratories, Inc., Standards UL486A and UL486B. Unless otherwise specified, F-frame circuit breakers are factory equipped with load terminals only.

Ordering Information

F-frame circuit breakers and molded case switches have load terminals only as standard equipment. When standard line-end terminals (same as standard load-end terminals) are required, add suffix L to the circuit breaker catalog number. When non-standard or optional line and/or load terminals are required, order by style number. Specify if factory installation is required.

Line and Load Terminals

Maximum Breaker Amperes	Terminal Body Material	Wire Type	AWG Wire Range	Metric Wire Range mm^2	Package of 3 Terminals Catalog Number
Standard Pressure Type Terminals					
20 (EHD)	Steel	Cu/Al	#14-#10	2.5-4	**3T20FB①**
100	Steel	Cu/Al	#14-1/0	2.5-50	**3T100FB**
225	Aluminum	Cu/Al	#14-4/0	25-95	**3TA225FD**
Optional Pressure Terminals					
50	Aluminum	Cu/Al	#14-#4	2.5-16	**3TA50FB①**
100	Aluminum	Cu/Al	#14-1/0	2.5-50	**3TA100FD**
200	Stainless Steel	Cu	#4-4/0	25-95	**3T150FB**
225	Aluminum	Cu/Al	#6-300 kcmil	16-150	**3TA225FDK②**

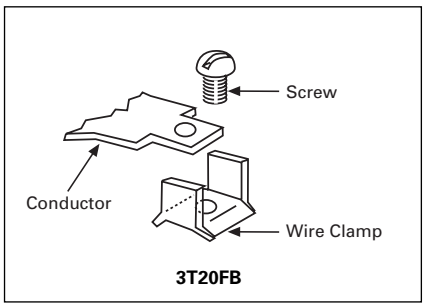

3T20FB

Assemble wire clamp to bottom of conductor as shown.

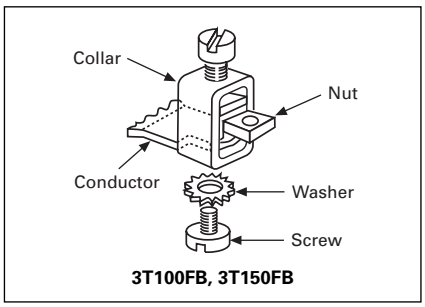

3T100FB, 3T150FB

Insert collar enclosing conductor as shown. Locate nut on top of conductor and tighten securely with screw and washer. Caution: Collar must surround conductor.

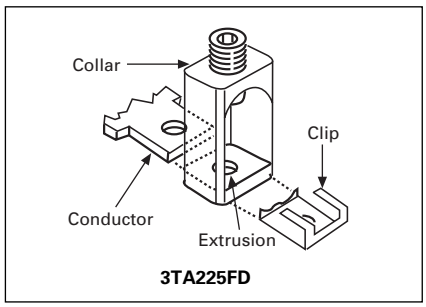

3TA225FD

Insert collar enclosing conductor and center on extrusion on collar. Install clip with legs on top of conductor and snap end around bottom of collar.

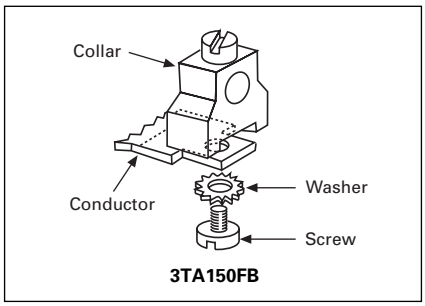

3TA150FB

Assemble collar on top of conductor as shown. Tighten securely with screw and washer.

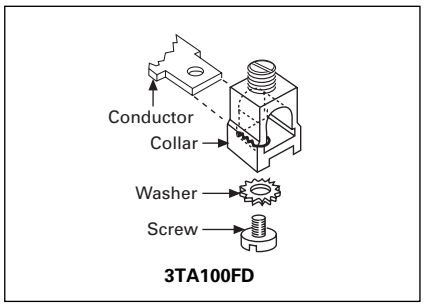

3TA100FD

Collar slides onto conductor and is held in position by a screw and lockwasher.

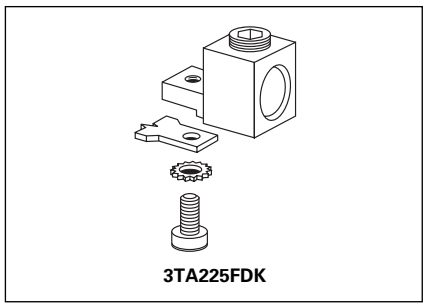

3TA225FDK

Assemble collar on top of conductor as shown. Tighten securely with screw and washer. Terminal shield must be used with this collar.

① Not for use with ED, EDH, EDC breakers.
② Includes terminal shield kit. Adds approximately 3 inches to breaker height. Available for use on 3-pole breaker only.

Catalog Numbering System

This information is presented only as an aid to understanding catalog numbers. It is not to be used to build catalog numbers for circuit breakers or trip units.

Circuit Breaker Catalog Number

FDC 3 100 L

Circuit Breaker Type	Number of Poles	Trip Amperes	Suffix
EHD	1: 1 Pole	10	E: 100% Protected (4-Pole only) Neutral Pole
FDB	2: 2 Poles	15	EH: 50% Protected (4-Pole only)
FD	3: 3 Poles	20	K: High Magnetic Molded Case Switch
HFD	4: 4 Poles	25	
FDC		30	L: Line and Load Terminals
		35	S: Stainless Steel Terminals
		40	V: 50˚C Calibration
		45	W: Without Terminals
		50	Y: Line Terminals Only
		60	Z: Aluminum Terminals (≤ 100 Amperes)
		70	
		80	
		90	
		100	
		110	
		125	
		150	
		175 (FD, HFD, FDC, 2-, 3-, 4-Pole Only)	
		200 (FD, HFD, FDC, 2-, 3-, 4-Pole Only)	
		225 (FD, HFD, FDC, 2-, 3-, 4-Pole Only)	

EDC 3 200 L

Circuit Breaker Type	Number of Poles	Trip Amperes	Suffix
ED	2: 2 Poles	100	L: Line and Load Terminals
EDH	3: 3 Poles	125	W: Without Terminals
EDC		150	Y: Line Terminals Only
		175	Z: Aluminum Terminals (100 Amperes)
		200	
		225	

Dimensions/Weights

Dimensions, Inches (mm)

Number of Poles	Width	Height	Depth
1	1.375 (35)	6 (152)	3.375 (86)
2	2.75 (70)	6 (152)	3.375 (86)
3	4.125 (105)	6 (152)	3.375 (86)
4	5.5 (140)	6 (152)	3.375 (86)

Approximate Shipping Weight, Lbs. (kg)

Breaker Type	Number of Poles			
	1	2	3	4
ED, EDH, EDC	–	3 (1.361)	4.5 (2.041)	–
EHD, FDB, FD, HFD, FDC	2 (.907)	3 (1.361)	4.5 (2.041)	6 (2.721)

Allowable Accessory Combinations

Different combinations of accessories can be supplied, depending on the types of accessories and the number of poles in the circuit breaker.

	Reference Page	1-Pole		2-Pole			3-Pole				4-Pole			
		Center		Left	Right		Left	Center	Right		Left	Center	Right	Neu.
Internal Accessories														
Alarm Lockout Switch (Make Only)	139	■												
Alarm Lockout (Make/Break)	139				■		❑		❑		■			
Alarm Lockout (2Make/2Break)	139				■		❑		❑		■			
Auxiliary Switch (1A, 1B)	142				■		■		■		■			■
Auxiliary Switch (2A, 2B)	142				■		■		■		■			■
Auxiliary Switch and Alarm Switch Combination	145				■		❑		❑		■			
Shunt Trip – Standard	148				■		■		■		■			■
Shunt Trip – Low Energy	152				■		■		■		■			
Undervoltage Release Mechanism	154				■		■		■		■			
External Accessories														
End Cap Kit	161			●			●				●			
Keeper Nut	161	●		●			●				●			
Control Wire Terminal Kit	162	●		●			●				●			
Multiwire Connectors	162	●		●			●				●			
Base Mounting Hardware	163	●		●			●				●			
Terminal Shields	165	●		●			●				●			
Terminal End Covers	166						●							
Interphase Barriers	166			●			●				●			
Non-Padlockable Handle Block	168	■		■				■				■		
Snap-on Padlockable Handle Lock Hasp	168	■		■				■				■		
Padlockable Handle Lock Hasp	169				■		❑		❑		❑		❑	
Cylinder Lock	169						■							
Key Interlock Kit	170				■		❑		❑		❑		❑	
Sliding Bar Interlock – Requires Two Breakers	171						●							
Walking Beam Interlock – Requires Two Breakers	171						●				●			
Electrical (Solenoid) Operator	172						●				●			
Plug-in Adapters	174			●			●				●			
Rear Connecting Studs	175	●		●			●				●			
Panelboard Connecting Straps	177	●		●			●				●			
Handle Mechanisms	178						●							
Door Hardware/Accessories	182						●				●			
LFD Current Limiter	183						●							
IQ Energy Sentinel	184			●			●							
Modifications (Refer to Cutler-Hammer)														
Special Calibration	186	●		●			●				●			
Moisture Fungus Treatment	186	●		●			●				●			
Freeze-Tested Circuit Breakers	186	●		●			●				●			
Marine Application	186	●		●			●				●			

■ Applicable in indicated pole position

❑ May be mounted on left or right pole – not both

● Accessory available/Modification available

Typical Series C J-Frame Circuit Breaker

- All Series C J-frame Circuit Breakers are HACR rated.
- J-frame circuit breakers are available as individual components (Frame, Trip Unit, Terminals), or factory assembled complete breakers.
- J-frame circuit breakers with non-interchangeable trip units are suitable for reverse feed use.

Interrupting Capacity Ratings

UL489 Interrupting Capacity Ratings

Circuit Breaker Type	Number of Poles	Interrupting Capacity (Symmetrical Amperes) (kA)						Page Number
		Volts Ac (50/60 Hz)				Volts Dc		
		240	480	600	125	250①②	500③	
JDB	2, 3	65	35	18	–	10	–	39
JD	2, 3, 4	65	35	18	–	10	–	38
HJD	2, 3, 4	100	65	25	–	22	–	38
JDC	2, 3, 4	200	100	35	–	22	–	38

IEC 157-1 (P1) Interrupting Capacity Ratings

Circuit Breaker Type	Number of Poles	Interrupting Capacity (Symmetrical Amperes) (kA)						Page Number
		Volts Ac (50/60 Hz)					Volts Dc	
		240	380	415	600	125	250①②	
JD	2, 3, 4	65	35	35	–	–	10	38
HJD	2, 3, 4	100	65	65	–	–	22	38
JDC	2, 3, 4	200	100	100	–	–	22	38

① 2-pole circuit breaker or two outside poles of 3-pole circuit breaker.
② Time constant is 3 milliseconds minimum at 10 kA and 8 milliseconds minimum at 22 kA.
③ 8 milliseconds time constant.

Types JD, HJD, and JDC Thermal-Magnetic Circuit Breakers with Interchangeable Trip Units

Maximum Continuous Ampere Rating @ 40°C	Standard Interrupting Capacity 600 Vac Rated 25 kAIC @ 480 Vac		High Interrupting Capacity 600 Vac Rated 65 kAIC @ 480 Vac		Ultra High Interrupting Capacity Current Limiting 600 Vac Rated 100 kAIC @ 480 Vac		Thermal Magnetic Trip Unit Only For Use With: Standard or High or Ultra High Interrupting Frames	Standard Terminals Only See Page 40 for Optional Terminals
	Factory Assembled Circuit Consisting of Frame, Trip Unit, and Terminals	Frame Only	Factory Assembled Circuit Consisting of Frame, Trip Unit, and Terminals	Frame Only	Factory Assembled Circuit Consisting of Frame, Trip Unit, and Terminals	Frame Only		
	Catalog Number							
2-Pole								
70	JD2070	JD2250F	HJD2070	HJD2250F	JDC2070	JDC2250F	JT2070T	TA250KB①
90	JD2090		HJD2090		JDC2090		JT2090T	
100	JD2100		HJD2100		JDC2100		JT2100T	
125	JD2125		HJD2125		JDC2125		JT2125T	
150	JD2150		HJD2150		JDC2150		JT2150T	
175	JD2175		HJD2175		JDC2175		JT2175T	
200	JD2200		HJD2200		JDC2200		JT2200T	
225	JD2225		HJD2225		JDC2225		JT2225T	
250	JD2250		HJD2250		JDC2250		JT2250T	
3-Pole								
70	JD3070	JD3250F	HJD3070	HJD3250F	JDC3070	JDC3250F	JT3070T	TA250KB①
90	JD3090		HJD3090		JDC3090		JT3090T	
100	JD3100		HJD3100		JDC3100		JT3100T	
125	JD3125		HJD3125		JDC3125		JT3125T	
150	JD3150		HJD3150		JDC3150		JT3150T	
175	JD3175		HJD3175		JDC3175		JT3175T	
200	JD3200		HJD3200		JDC3200		JT3200T	
225	JD3225		HJD3225		JDC3225		JT3225T	
250	JD3250		HJD3250		JDC3250		JT3250T	
4-Pole②③								
70	JD4070	JD4250F	HJD4070	HJD4250F	JDC4070	JDC4250F	JT4070T	TA250KB①
90	JD4090		HJD4090		JDC4090		JT4090T	
100	JD4100		HJD4100		JDC4100		JT4100T	
125	JD4125		HJD4125		JDC4125		JT4125T	
150	JD4150		HJD4150		JDC4150		JT4150T	
175	JD4175		HJD4175		JDC4175		JT4175T	
200	JD4200		HJD4200		JDC4200		JT4200T	
225	JD4225		HJD4225		JDC4225		JT4225T	
250	JD4250		HJD4250		JDC4250		JT4250T	

Instruction Leaflet/FRED Number 29C103 for Breaker; 29C600 for Thermal Magnetic Trip Unit

① Individually packed.
② Fully rated neutral pole with no protection.
③ Neutral is in right pole.

Type JDB Thermal-Magnetic Circuit Breakers with Non-Interchangeable Thermal-Magnetic Trip Units

Maximum Continuous Ampere Rating @ 40°C	600 Vac Rated, 250 Vdc	
	Complete Circuit Breaker	
	Without Line and Load Terminals	With Standard Line and Load Terminals Only
	Catalog Number	
2-Pole		
70	JDB2070W	JDB2070
90	JDB2090W	JDB2090
100	JDB2100W	JDB2100
125	JDB2125W	JDB2125
150	JDB2150W	JDB2150
175	JDB2175W	JDB2175
200	JDB2200W	JDB2200
225	JDB2225W	JDB2225
250	JDB2250W	JDB2250
3-Pole		
70	JDB3070W	JDB3070
90	JDB3090W	JDB3090
100	JDB3100W	JDB3100
125	JDB3125W	JDB3125
150	JDB3150W	JDB3150
175	JDB3175W	JDB3175
200	JDB3200W	JDB3200
225	JDB3225W	JDB3225
250	JDB3250W	JDB3250

Instruction Leaflet/FRED Number 29C103 for Breaker

Molded Case Switches

Molded case switches are used as compact switches in applications requiring high current switching capabilities. Molded case switches are constructed of circuit breaker components and are of the high instantaneous automatic type. Molded case switches are listed in accordance with Underwriters Laboratories, Inc., Standard UL 1087.

Maximum Continuous Ampere Rating @ 40°C	600 Vac Maximum, 250 Vdc		Standard Terminals Only See page 40 for Optional Terminals
	Complete Circuit Breaker Only Without Line and Load Terminals		
		Suitable for Reverse Feed Use	
	Catalog Number		
2-Pole			
250	JD2250WK	JDB2250WK	TA250KB①
3-Pole			
250	JD3250WK	JDB3250WK	TA250KB①

Note: Molded case switches may open above 2500 amperes.

Instruction Leaflet/FRED Number 29C103

① Individually packed.

Line and Load Terminals

Line and load terminals provide wire connecting capabilities for specific ranges of continuous current ratings and wire types. All terminals comply with Underwriters Laboratories, Inc., Standards UL486A and UL486B and CSA Standard C22.2 No. 65, or Electrical Bulletin 1165. Unless otherwise specified, J-frame circuit breaker line and load terminals are shipped separately for field installation.

The bottom of the standard TA250KB terminal contains a recess which is positioned over the J-frame circuit breaker terminal conductor.

Ordering Information

J-frame circuit breakers use Cu/Al terminals as standard. When optional copper-only terminals are required, order by catalog number. Specify if factory installation is required.

Line and Load Terminals

Maximum Breaker Amperes	Terminal Body Material	Wire Type	AWG Wire Range/ No. Conductors	Metric Wire Range mm^2	Catalog Numbers
Standard Cu/Al Pressure Terminals					
250	Aluminum	Cu/Al	#4-350 kcmil	25-185	**TA250KB**
250	Stainless Steel	Cu	#4-350 kcmil	25-185	**T250KB**

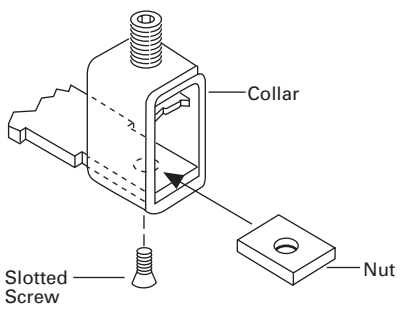

T250KB Terminal

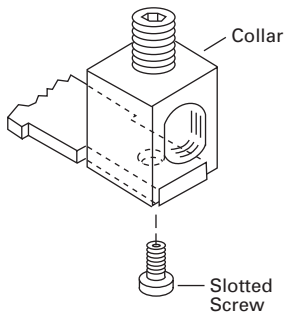

TA250KB Terminal

Catalog Numbering System

This information is presented only as an aid to understanding catalog numbers. It is not to be used to build catalog numbers for circuit breakers or trip units.

Circuit Breaker/Frame Catalog Number

JD 3 250 F

- JD: Circuit Breaker/Frame Type
- 3: Number of Poles
- 250: Circuit Breaker/Frame Ampere Rating
- F: Suffix

JDB	2: 2 Poles	70	C: Non-Aluminum Terminals
JD	3: 3 Poles	90	F: Frame Only
HJD	4: 4 Poles	100	K: High Magnetic Molded Case Switch
JDC		125	V: 50°C Calibration
		150	W: Without Terminals
		175	X: Load Side Terminals Only
		200	Y: Line Side Terminals Only
		225	
		250	

Trip Unit Catalog Number

JT 3 250 T

- JT: Trip Unit Type
- 3: Number of Poles
- 250: Trip Unit/Rating Plug Ampere Rating
- T: Suffix

JT:	Thermal-Magnetic	2	70	T: Trip Unit Thermal-Magnetic Fixed Thermal Adj. Magnetic
		3	90	
		4	100	
			125	
			150	V: 50°C Calibration (Thermal-Magnetic Trip Units Only)
			175	
			200	
			225	
			250	

Dimensions/Weights

Dimensions, Inches (mm)

Number of Poles	Width	Height	Depth
2, 3	4.125 (105)	10 (255)	4.063 (103)
4	5.5 (140)	10 (254)	4.063 (103)

Approximate Shipping Weight, Lbs. (kg)

Breaker Type	Complete Breaker			Frame Only			Trip Unit①		
	Number of Poles								
	2	3	4	2	3	4	2	3	4
JDB	11.25 (5.103)	12.5 (5.670)	–	–	–	–	–	–	–
JD	11.25 (5.103)	12.5 (5.670)	13.25 (6.010)	9 (4.082)	10 (4.536)	10.5 (4.763)	2 (.907)	2 (.907)	2.25 (1.021)
HJD	11.25 (5.103)	12.5 (5.670)	13.25 (6.010)	9 (4.082)	10 (4.536)	10.5 (4.763)	2 (.907)	2 (.907)	2.25 (1.021)
JDC	12.25 (5.103)	13.5 (6.124)	14.25 (6.470)	10 (4.536)	11 (4.990)	11.5 (5.217)	2 (.907)	2 (.907)	2.25 (1.021)

Series C® J-Frame Allowable Accessory Combinations

Different combinations of accessories can be supplied, depending on the types of accessories and the number of poles in the circuit breaker.

	Reference Page		2-, 3-Pole				4-Pole			
			Left	Center	Right		Left	Center	Right	Neu.
Internal Accessories (Only One Internal Accessory Per Pole)										
Alarm Lockout (Make/Break)	140		❑		❑		❑		❑	
Auxiliary Switch (1A, 1B)	142		■		■		■		■	
Auxiliary Switch (2A, 2B)	142		■		■		■		■	
Auxiliary Switch and Alarm Switch Combination	145		❑		❑		❑		❑	
Shunt Trip – Standard	148		■		■		■		■	
Shunt Trip – Low Energy	152		■		■		■		■	
Undervoltage Release Mechanism	155		■		■		■		■	
External Accessories										
End Cap Kit	161			●				●		
Plug Nut	161			●				●		
Control Wire Terminal Kit	162			●				●		
Multiwire Connectors	162			●				●		
Base Mounting Hardware	163			●				●		
Terminal Shields	165			●				●		
Interphase Barriers	166			●				●		
Non-Padlockable Handle Block	168			■				■		
Padlockable Handle Block	168			■				■		
Padlockable Handle Lock Hasp	169		❑		❑		❑		❑	
Cylinder Lock	169		❑		❑					
Key Interlock Kit	170		❑		❑		❑		❑	
Sliding Bar Interlock – Requires Two Breakers	171			●						
Electrical (Solenoid) Operator	172			●				●		
Plug-in Adapters	174			●				●		
Rear Connecting Studs	176			●				●		
Panelboard Connecting Straps	177			●				●		
Handle Mechanisms	178			●				●		
Door Hardware/Accessories	182			●				●		
Handle Extension	182			●				●		
IQ Energy Sentinel	184			●						
Modifications (Refer to Cutler-Hammer)										
Special Calibration	186			●				●		
Moisture Fungus Treatment	186			●				●		
Freeze-Tested Circuit Breakers	186			●				●		
Marine/Naval Application	186			●				●		

■ Applicable in indicated pole position

❑ May be mounted on left or right pole – not both

● Accessory available/Modification available

Typical Series C K-Frame Circuit Breaker

- All Series C K-frame Circuit Breakers are HACR rated.
- K-frame circuit breakers are available as individual components (Frame, Trip Unit, Terminals), or factory assembled complete breakers. OPTIM circuit breakers are available as factory assembled only.
- K-frame circuit breakers with non-interchangeable trip units are suitable for reverse feed use.

Interrupting Capacity Ratings

NEMA/UL489/CSA Interrupting Capacity Ratings

Circuit Breaker Type	Number of Poles	Interrupting Capacity (Symmetrical Amperes) (kA)					Page Number
		Volts Ac (50/60Hz)				Volts Dc	
		240	277	480	600	250②③	
DK	2, 3	65	–	–	–	10	47
KDB	2, 3, 4	65	–	35	25	10	47
KD	2, 3, 4	65	–	35	25	10	45, 46, 49
HKD	2, 3, 4	100	–	65	35	22	45, 46, 49
KDC	2, 3, 4	200	–	100	50	22	45, 46, 49
CKD	3	65	–	35	25	10	48, 50
CHKD	3	100	–	65	35	22	48, 50

IEC 157-1 (P1) Interrupting Capacity Ratings

Circuit Breaker Type	Number of Poles	Interrupting Capacity (Symmetrical Amperes) (kA)							Page Number
		Volts Ac (50/60Hz)						Volts Dc	
		240	380	415	440	500	600	250③	
DK	2, 3	65	–	–	–	–	–	10	47
KDB	2, 3, 4	65	40	40	–	–	–	10	47
KD	2, 3, 4	65	40	40	–	–	–	10	45, 46, 49
HKD	2, 3, 4	100	65	65	–	–	–	22	45, 46, 49
KDC	2, 3, 4	200	100	100	–	–	–	22	45, 46, 49

① Weights shown are for thermal magnetic trip units. 3-pole electronic trip units weigh 2.5 lbs. (1.134 kg).
② 2-pole circuit breaker or two outside poles of 3-pole circuit breaker.
③ Time constant is 3 milliseconds minimum at 10 kA and 8 milliseconds minimum at 22 kA.

K-Frame Digitrip Selection Guide

Trip Unit Type	Digitrip RMS 310		Digitrip OPTIM 550
RMS Sensing	Yes		Yes
Breaker Type			
Frame	K		K
Ampere Range	70-400A		70-400A
Interrupting Rating at 480V	35, 65, 100 (kA)		35, 65, 100 (kA)
Protection			
Ordering Options	LS, LSG	LSI, LSIG	LSI, LSI(A), LSIG
Fixed Rated Plug (I_n)	Yes	Yes	Yes
Overtemperature Trip	Yes	Yes	Yes
Long Delay Protection (L)			
Adjustable Rating Plug (I_n)	Yes	Yes	No
Long Delay Pickup	0.5-1.0 (I_n)①	0.5-1.0 (I_n)①	0.4-1.0 x (I_n)
Long Delay Time I^2T	12 Seconds	12 Seconds	2-24 Seconds
Long Delay Time I^4T	No	No	1-5 Seconds
Long Delay Thermal Memory	Yes	Yes	Yes
High Load Alarm	No	No	0.5-1.0 x I_r
Short Delay Protection (S)			
Short Delay Pickup	200-800% x (I_n)	200-800% x (I_n)	150-800% x (I_r)
Short Delay Time I^2T	100 ms	No	100-500 ms
Short Delay Time Flat	No	Inst-300 ms	100-500 ms
Short Delay Time Zone Selective Interlocking	No	No	No
Instantaneous Protection (I)			
Instantaneous Pickup	No	200-800% x (I_n)	200-800% x (I_n)
Discriminator	No	No	Yes
Instantaneous Override	Yes	Yes	Yes
Ground Fault Protection (G)			
Ground Fault Alarm	No	No	20-100% x (I_s)
Ground Fault Pickup	Varies by Frame	Varies by Frame	20-100% x (I_s)
Ground Fault Delay I^2T	No	No	100-500 ms
Ground Fault Delay Flat	Inst-500 ms	Inst-500 ms	100-500 ms
Ground Fault Zone Selective Interlocking	No	No	No
Ground Fault Thermal Memory	Yes	Yes	Yes
System Diagnostics			
Status LEDs	Yes	Yes	Yes
Cause of Trip LEDs	No	No	Yes
Magnitude of Trip Information	No	No	Yes
Remote Signal Contact – Ground Alarm	Yes	Yes	No
Local Auxiliary and Bell Alarm Contact	Optional	Optional	Optional
System Monitoring			
Digital Display	No	No	Yes②
Current	No	No	Yes
Power and Energy	No	No	No
Power Quality-Harmonics	No	No	No
Power Factor	No	No	No
Communications			
Cutler-Hammer PowerNet	No	No	No③
Testing			
Testing Method	Test Set		OPTIMizer, BIM, Cutler-Hammer PowerNet

① Adjust by rating plug.
② By OPTIMizer/BIM.
③ Cutler-Hammer PowerNet kit for field upgrade.

BIM = Breaker Interface Module
(A) = GF Alarm

I_s = Sensor Rating
I_n = Rating Plug
I_r = Long Delay Pickup Setting

Types KD, HKD, and KDC Thermal-Magnetic Circuit Breakers with Interchangeable Trip Units

Maximum Continuous Ampere Rating @ 40°C	Standard Interrupting Capacity 600 Vac Rated 35 kAIC @ 480 Vac		High Interrupting Capacity 600 Vac Rated 65 kAIC @ 480 Vac		Ultra High Interrupting Capacity Current Limiting 600 Vac Rated 100 kAIC @ 480 Vac		Thermal Magnetic Trip Unit Only For Use With: Standard or High or Ultra High Interrupting Frames	Standard Terminals Only See Page 51 for Optional Terminals
	Factory Assembled Circuit Consisting of Frame, Trip Unit, and Terminals	Frame Only	Factory Assembled Circuit Consisting of Frame, Trip Unit, and Terminals	Frame Only	Factory Assembled Circuit Consisting of Frame, Trip Unit, and Terminals	Frame Only		
	Catalog Number							
2-Pole								
100	KD2100	KD2400F	HKD2100	HKD2400F	KDC2100	KDC2400F	KT2100T	TA300K①
125	KD2125		HKD2125		KDC2125		KT2125T	TA300K①
150	KD2150		HKD2150		KDC2150		KT2150T	TA300K①
175	KD2175		HKD2175		KDC2175		KT2175T	TA300K①
200	KD2200		HKD2200		KDC2200		KT2200T	TA300K①
225	KD2225		HKD2225		KDC2225		KT2225T	TA300K①
250	KD2250		HKD2250		KDC2250		KT2250T	TA350K①
300	KD2300		HKD2300		KDC2300		KT2300T	TA350K①
350	KD2350		HKD2350		KDC2350		KT2350T	TA350K①
400	KD2400		HKD2400		KDC2400		KT2400T	2TA400K②
3-Pole								
100	KD3100	KD3400F	HKD3100	HKD3400F	KDC3100	KDC3400F	KT3100T	TA300K①
125	KD3125		HKD3125		KDC3125		KT3125T	TA300K①
150	KD3150		HKD3150		KDC3150		KT3150T	TA300K①
175	KD3175		HKD3175		KDC3175		KT3175T	TA300K①
200	KD3200		HKD3200		KDC3200		KT3200T	TA300K①
225	KD3225		HKD3225		KDC3225		KT3225T	TA300K①
250	KD3250		HKD3250		KDC3250		KT3250T	TA350K①
300	KD3300		HKD3300		KDC3300		KT3300T	TA350K①
350	KD3350		HKD3350		KDC3350		KT3350T	TA350K①
400	KD3400		HKD3400		KDC3400		KT3400T	3TA400K②
4-Pole								
100	KD4100	KD4400F	HKD4100	HKD4400F	KDC4100	KDC4400F	KT3100T	TA300K①
125	KD4125		HKD4125		KDC4125		KT3125T	TA300K①
150	KD4150		HKD4150		KDC4150		KT3150T	TA300K①
175	KD4175		HKD4175		KDC4175		KT3175T	TA300K①
200	KD4200		HKD4200		KDC4200		KT3200T	TA300K①
225	KD4225		HKD4225		KDC4225		KT3225T	TA300K①
250	KD4250		HKD4250		KDC4250		KT3250T	TA350K①
300	KD4300		HKD4300		KDC4300		KT3300T	TA350K①
350	KD4350		HKD4350		KDC4350		KT3350T	TA350K①
400	KD4400		HKD4400		KDC4400		KT3400T	4TA400K②

Instruction Leaflet/FRED Number 29C104 for Breaker; 29C603 for Thermal Magnetic Trip Unit

① Individually packed.
② 2TA400K, 3TA400K, and 4TA400K terminal kits contain one terminal for each pole and one terminal cover.

Types KD, HKD, and KDC Electronic Circuit Breakers with Interchangeable Trip Units

Order as individual components: Breaker Frame, Trip Unit, Rating Plug, Terminals.

Maximum Continuous Ampere Rating @ 40°C①	Circuit Breaker Frame Only			Digitrip RMS 310 Trip Unit Only②				Digitrip 310 Rating Plug Only			Standard Terminals Only
	Standard Interrupting Capacity 600 Vac Rated 35 kAIC @ 480 Vac	High Interrupting Capacity 600 Vac Rated 65 kAIC @ 480 Vac	Ultra High Interrupting Capacity Current Limiting 600 Vac Rated 100 kAIC @ 480 Vac	Standard	Options			Ampere Rating	Fixed Rating Plug	Adjustable Rating Plugs	See Page 51 for Optional Terminals
				Adjustable Short Time Delay with I^2t Short Delay Ramp	Independently Adjustable Short Time Pickup and Delay	Adjustable Short Time Pickup with I^2t Short Delay and Ground Fault Protection	Independently Adjustable Short Time Pickup and Delay and Ground Fault Protection			Ampere Rating Catalog Number	
	Catalog Number										
3-Pole③											
125	**KD3400F**	**HKD3400F**	**KDC3400F**	**KES3125LS**	**KES3125LSI**	**KES3125LSG**	**KES3125LSIG**	70 90 100 110 125	**1KES070T** **1KES090T** **1KES100T** **1KES110T** **1KES125T**	70/90/100/125 **A1KES125T1**	**TA300K④**
250	**KD3400F**	**HKD3400F**	**KDC3400F**	**KES3250LS**	**KES3250LSI**	**KES3250LSG**	**KES3250LSIG**	70 100 125 150 160 175 200 225 250	**2KES070T** **2KES100T** **2KES125T** **2KES150T** **2KES160T** **2KES175T** **2KES200T** **2KES225T** **2KES250T**	125/150/200/250 **A2KES250T1**	**TA300K④**
400	**KD3400F**	**HKD3400F**	**KDC3400F**	**KES3400LS**	**KES3400LSI**	**KES3400LSG**	**KES3400LSIG**	200 225 250 300 350 400	**4KES200T** **4KES225T** **4KES250T** **4KES300T** **4KES350T** **4KES400T**	200/250/300/400 **A4KES400T1**	**TA300K④** **TA300K④** **TA300K④** **TA300K④** **TA350K④** **3TA400K④**
4-Pole⑥⑦											
125	**KD4400F**	**HKD4400F**	**KDC4400F**	**KES4125LS**	**KES4125LSI**	–	–	70 90 100 110 125	**1KES070T** **1KES090T** **1KES100T** **1KES110T** **1KES125T**	70/90/100/125 **A1KES125T1**	**TA300K④**
250	**KD4400F**	**HKD4400F**	**KDC4400F**	**KES4250LS**	**KES4250LSI**	–	–	70 100 125 150 160 175 200 225 250	**2KES070T** **2KES100T** **2KES125T** **2KES150T** **2KES160T** **2KES175T** **2KES200T** **2KES225T** **2KES250T**	125/150/200/250 **A2KES250T1**	**TA300K④**
400	**KD4400F**	**HKD4400F**	**KDC4400F**	**KES4400LS**	**KES4400LSI**	–	–	200 225 250 300 350 400	**4KES200T** **4KES225T** **4KES250T** **4KES300T** **4KES350T** **4KES400T**	200/250/300/400 **A4KES400T1**	**TA300K④** **TA300K④** **TA300K④** **TA300K④** **TA350K④** **3TA400K④**

Instruction Leaflet/FRED Number 29C104 for Breaker; 29C614 for Electronic Trip Unit

① Ampere rating is established by rating plug.
② For Ac use only.
③ 3-pole KES Trip Units are for use in 3-pole frames only.
④ Individually packed.
⑤ 3TA400K and 4TA400K terminal kits contain one terminal for each pole and one terminal cover.
⑥ Trip unit includes protected neutral pole. Use corresponding 3-pole trip unit if protected neutral pole is not required.
⑦ Fully rated neutral pole protection is standard. For 50% rated protection on neutral pole, add suffix E to 4-pole trip unit catalog number.

Types DK and KDB Thermal-Magnetic Circuit Breakers with Non-Interchangeable Trip Units

Maximum Continuous Ampere Rating @ 40°C	240 Vac Rated, 250 Vdc		
	Complete Circuit Breaker		
	Without Line and Load Terminals	With Line Terminals Only	With Standard Line and Load Terminals Only
	Catalog Number		
2-Pole			
100	–	–	–
125	–	–	–
150	–	–	–
175	–	–	–
200	–	–	–
225	–	–	–
250	DK2250W	DK2250Y	DK2250
300	DK2300W	DK2300Y	DK2300
350	DK2350W	DK2350Y	DK2350
400	DK2400W	DK2400Y	DK2400
3-Pole			
100	–	–	–
125	–	–	–
150	–	–	–
175	–	–	–
200	–	–	–
225	–	–	–
250	DK3250W	DK3250Y	DK3250
300	DK3300W	DK3300Y	DK3300
350	DK3350W	DK3350Y	DK3350
400	DK3400W	DK3400Y	DK3400

Maximum Continuous Ampere Rating @ 40°C	600 Vac Rated, 250 Vdc	
	Complete Circuit Breaker	
	Without Line and Load Terminals	With Standard Line and Load Terminals
	Catalog Number	
2-Pole		
100	KDB2100W	KDB2100
125	KDB2125W	KDB2125
150	KDB2150W	KDB2150
175	KDB2175W	KDB2175
200	KDB2200W	KDB2200
225	KDB2225W	KDB2225
250	KDB2250W	KDB2250
300	KDB2300W	KDB2300
350	KDB2350W	KDB2350
400	KDB2400W	KDB2400
3-Pole		
100	KDB3100W	KDB3100
125	KDB3125W	KDB3125
150	KDB3150W	KDB3150
175	KDB3175W	KDB3175
200	KDB3200W	KDB3200
225	KDB3225W	KDB3225
250	KDB3250W	KDB3250
300	KDB3300W	KDB3300
350	KDB3350W	KDB3350
400	KDB3400W	KDB3400

Instruction Leaflet/FRED Number 29C104

Molded Case Switches

Molded case switches are used as compact switches in applications requiring high current switching capabilities. Molded case switches are constructed of circuit breaker components and are of the high instantaneous automatic type. Molded case switches are listed in accordance with Underwriters Laboratories, Inc., Standard UL 1087.

Maximum Continuous Ampere Rating @ 40°C	240 Vac Maximum, 250 Vdc	600 Vac Maximum, 250 Vdc	600 Vac Maximum, 250 Vdc
	Complete Circuit Breaker with Standard Line and Load Terminals	Complete Circuit Breaker with Standard Line and Load Terminals	Complete Circuit Breaker with Standard Line and Load Terminals. Suitable for Reverse Feed Use
	Catalog Number		
2-Pole			
400	DK2400K	KD2400K	KDB2400K
3-Pole			
400	DK3400K	KD3400K	KDB3400K
4-Pole			
400	–	KD4400K	–

Note: Molded case switches may open above 4000 amperes.

Instruction Leaflet/FRED Number 29C104

100% Rated Types CKD and CHKD Electronic Circuit Breakers

The NEC allows the breaker to be rated at 100% of its frame size in an assembly, provided that 90°C wire is applied at the 75°C ampacity. All 100% rated circuit breakers have electronic trip units.

Maximum Continuous Ampere Rating @ 40°C	Circuit Breaker Frame Only		Digitrip RMS 310 Trip Unit Only				Digitrip 310 Rating Plug Only			Standard Terminals Only
	Standard Interrupting Capacity 35 kAIC @ 480 Vac	High Interrupting Capacity 65 kAIC @ 480 Vac	Standard	Options			Ampere Rating	Fixed Rating Plug	Adjustable Rating Plug	See Page 51 for Optional Terminals
			Adjustable Short Time Delay with I^2t Short Delay Ramp	Independently Adjustable Short Time Pickup and Delay	Adjustable Short Time Pickup with I^2t Short Delay and Ground Fault Protection	Independently Adjustable Short Time Pickup and Delay and Ground Fault Protection			Ampere Rating Catalog Number	
	Catalog Number									
3-Pole										
125	**CKD3400F**	**CHKD3400F**	**KES3125LS**	**KES3125LSI**	**KES3125LSG**	**KES3125LSIG**	70 90 100 110 125	**1KES070T** **1KES090T** **1KES100T** **1KES110T** **1KES125T**	70/90/100/125 **A1KES125T1**	**TA300K④**
250	**CKD3400F**	**CHKD3400F**	**KES3250LS**	**KES3250LSI**	**KES3250LSG**	**KES3250LSIG**	70 100 125 150 160 175 200 225 250	**2KES070T** **2KES100T** **2KES125T** **2KES150T** **2KES160T** **2KES175T** **2KES200T** **2KES225T** **2KES250T**	125/150/200/250 **A2KES250T1**	**TA300K④**
400	**CKD3400F**	**CHKD3400F**	**KES3400LS**	**KES3400LSI**	**KES3400LSG**	**KES3400LSIG**	200 225 250 300 350 400	**4KES200T** **4KES225T** **4KES250T** **4KES300T** **4KES350T** **4KES400T**	200/250/300/400 **A4KES400T1**	**TA300K④** **TA300K④** **TA300K④** **TA300K④** **TA350K④** **3TA400K④**

Instruction Leaflet/FRED Number 29C104 for Breaker; 29C614 for KES Trip Unit

① Individually packed.
② TA400K, T400K and TA401K terminal kits contain one terminal for each pole and one terminal cover.

Digitrip OPTIM 550 Electronic Circuit Breakers with Interchangeable Rating Plug

Order as individual components: Breaker Frame (which includes Trip Unit), Rating Plug, Terminals.

Maximum Continuous Ampere Rating @ 40°C	Circuit Breaker Frame Only			Digitrip OPTIM Rating Plug Only	
	L – Adjustable Long Delay Pickup (I_r) with Adjustable Long Delay Time (I^2t or I^4t Response)① S – Adjustable Short Delay Pickup with Adjustable Short Delay Time (I^2t or Flat Response) I – Adjustable Instantaneous Pickup G – Adjustable Ground Fault Pickup with Adjustable Ground Fault Time (I^2t or Flat Response) A – Adjustable Ground Fault Alarm with Adjustable Ground Fault Time (I^2t or Flat Response)			Ampere Rating	Fixed Rating Plug
	OPTIM 550				
	LSI	LSIG	LSIA		
	Catalog Number				
3-Pole Standard Interrupting Capacity 600 Volt Ac Rated 35 kAIC @ 480 Vac					
125	KD3125T52W	KD3125T56W	KD3125T57W	70 90 100 110 125	ORPK125A070 ORPK125A090 ORPK125A100 ORPK125A110 ORPK125A125
250	KD3250T52W	KD3250T56W	KD3250T57W	125 150 175 200 225 250	ORPK025A125 ORPK025A150 ORPK025A175 ORPK025A200 ORPK025A225 ORPK025A250
400	KD3400T52W	KD3400T56W	KD3400T57W	200 225 250 300 350 400	ORPK40A200 ORPK40A225 ORPK40A250 ORPK40A300 ORPK40A350 ORPK40A400
3-Pole High Interrupting Capacity 600 Volt Ac Rated 65 kAIC @ 480 Vac					
125	HKD3125T52W	HKD3125T56W	HKD3125T57W	70 90 100 110 125	ORPK125A070 ORPK125A090 ORPK125A100 ORPK125A110 ORPK125A125
250	HKD3250T52W	HKD3250T56W	HKD3250T57W	125 150 175 200 225 250	ORPK025A125 ORPK025A150 ORPK025A175 ORPK025A200 ORPK025A225 ORPK025A250
400	HKD3400T52W	HKD3400T56W	HKD3400T57W	200 225 250 300 350 400	ORPK40A200 ORPK40A225 ORPK40A250 ORPK40A300 ORPK40A350 ORPK40A400
3-Pole Ultra High Interrupting Capacity Current Limiting 600 Volt Ac Rated 100 kAIC @ 480 Vac					
125	KDC3125T52W	KDC3125T56W	KDC3125T57W	70 90 100 110 125	ORPK125A070 ORPK125A090 ORPK125A100 ORPK125A110 ORPK125A125
250	KDC3250T52W	KDC3250T56W	KDC3250T57W	125 150 175 200 225 250	ORPK025A125 ORPK025A150 ORPK025A175 ORPK025A200 ORPK025A225 ORPK025A250
400	KDC3400T52W	KDC3400T56W	KDC3400T57W	200 225 250 300 350 400	ORPK40A200 ORPK40A225 ORPK40A250 ORPK40A300 ORPK40A350 ORPK40A400

Instruction Leaflet/FRED Number 29C104

① Long delay I^4t response selection limits short delay time to flat response.

100% Rated Digitrip OPTIM 550 Electronic Circuit Breakers with Interchangeable Rating Plug

Order as individual components: Breaker Frame (which includes Trip Unit), Rating Plug, Terminals.

Maximum Continuous Ampere Rating @ 40°C	Circuit Breaker Frame Only			Digitrip OPTIM Rating Plug Only	
	L – Adjustable Long Delay Pickup (I_r) with Adjustable Long Delay Time (I^2t or I^4t Response)① S – Adjustable Short Delay Pickup with Adjustable Short Delay Time (I^2t or Flat Response) I – Adjustable Instantaneous Pickup G – Adjustable Ground Fault Pickup with Adjustable Ground Fault Time (I^2t or Flat Response) A – Adjustable Ground Fault Alarm with Adjustable Ground Fault Time (I^2t or Flat Response)			Ampere Rating	Fixed Rating Plug
	OPTIM 550				
	LSI	LSIG	LSIA		
	Catalog Number				
3-Pole Standard Interrupting Capacity 600 Volt Ac Rated 35 kAIC @ 480 Vac					
125	CKD3125T52W	CKD3125T56W	CKD3125T57W	70 90 100 110 125	ORPK125A070 ORPK125A090 ORPK125A100 ORPK125A110 ORPK125A125
250	CKD3250T52W	CKD3250T56W	CKD3250T57W	125 150 175 200 225 250	ORPK025A125 ORPK025A150 ORPK025A175 ORPK025A200 ORPK025A225 ORPK025A250
400	CKD3400T52W	CKD3400T56W	CKD3400T57W	200 225 250 300 350 400	ORPK40A200 ORPK40A225 ORPK40A250 ORPK40A300 ORPK40A350 ORPK40A400
3-Pole High Interrupting Capacity 600 Volt AC Rated 65 kAIC @ 480 Vac					
125	CHKD3125T52W	CHKD3125T56W	CHKD3125T57W	70 90 100 110 125	ORPK125A070 ORPK125A090 ORPK125A100 ORPK125A110 ORPK125A125
250	CHKD3250T52W	CHKD3250T56W	CHKD3250T57W	125 150 175 200 225 250	ORPK025A125 ORPK025A150 ORPK025A175 ORPK025A200 ORPK025A225 ORPK025A250
400	CHKD3400T52W	CHKD3400T56W	CHKD3400T57W	200 225 250 300 350 400	ORPK40A200 ORPK40A225 ORPK40A250 ORPK40A300 ORPK40A350 ORPK40A400

Instruction Leaflet/FRED Number 29C104

① Long delay I^4t response selection limits short delay time to flat response.

Line and Load Terminals

Line and load terminals provide wire connecting capabilities for specific ranges of continuous current ratings and wire types. All terminals comply with Underwriters Laboratories, Inc., Standards UL486A and UL486B and CSA Standard C22.2 No. 65, or Electrical Bulletin 1165. Unless otherwise specified, K-frame circuit breaker line and load terminals are shipped separately for field installation.

Ordering Information

K-frame circuit breakers use Cu/Al terminals as standard. When optional copper or Cu/Al terminals are required, order by catalog number. Specify if factory installation is required.

Line and Load Terminals

Maximum Breaker Amperes	Terminal Body Material	Wire Type	AWG Wire Range/ No. Conductors	Metric Wire Range mm^2	Terminal Catalog Number	Figure	Terminals with Control Wire Termination Catalog Number	Figure
Standard Cu/Al Pressure Terminals								
225	Aluminum	Cu/Al	3-350/(1)	35-185	**TA300K**①	4	–	–
350	Aluminum	Cu/Al	250-500/(1)	120-240	**TA350K**①	3	–	–
400	Aluminum	Cu/Al	3/0-250/(2)	95-120	**2TA400K**④	2	**2TA400KCW**④	5
					3TA400K⑤	2	**3TA400KCW**⑤	5
					4TA400K⑥	2	**4TA400KCW**⑥	5
Optional Copper and Cu/Al Pressure Type Terminals								
225	Copper	Cu	3-350/(1)	35-185	**T300K**①	4	–	–
350	Copper	Cu	250-500/(1)	120-240	**T350K**①	3	–	–
400	Copper	Cu	3/0-250/(2)	95-120	**2T400K**④	2	**2T400KCW**④	5
					3T400K⑤	2	**3T400KCW**⑤	5
					4T400K⑥	2	**4T400KCW**⑥	5
400	Aluminum	Cu/Al	2/0-250/(2)	70-120	**2TA401K**④	1	**2TA401KCW**④	5
			or	70-240	**3TA401K**⑤	1	**3TA401KCW**⑤	5
			2/0-500/(1)	70-240	**4TA401K**⑥	1	**4TA401KCW**⑥	5
400	Aluminum	Cu/Al	500-750/(1)	300-400	**TA402K**	6	–	–

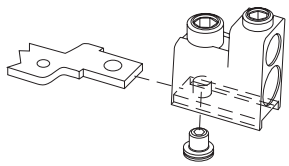

Figure 1. TA401K

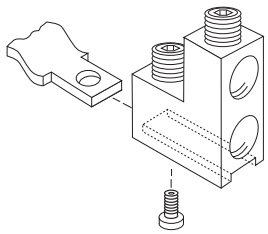

Figure 2. TA400K, T400K

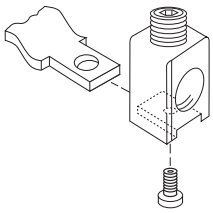

Figure 3. TA350K, T350K

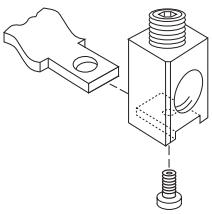

Figure 4. TA300K, T300K

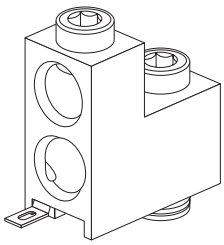

Figure 5. T400KCW, TA400KCW, TA401KCW

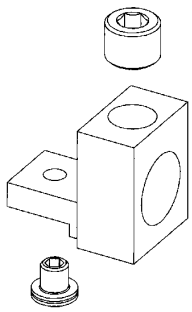

Figure 6. TA402K

See page 53 for other termination accessories.

① Individually packed.
② Terminal kits contain one terminal for each pole and one terminal cover.
③ Terminal kits contain one terminal for each pole and three interphase barriers.
④ 2-Pole Kit.
⑤ 3-Pole Kit.
⑥ 4-Pole Kit.

Catalog Numbering System

This information is presented only as an aid to understanding catalog numbers. It is not to be used to build catalog numbers for circuit breakers or trip units.

Circuit Breaker/Frame Catalog Number

KD 3 400 F

Circuit Breaker/ Frame Type	Number of Poles	Circuit Breaker/ Frame Ampere Rating	Suffix
DK DKB KD HKD KDC CKD CHKD	2: 2 Poles 3: 3 Poles 4: 4 Poles	100 125 150 175 200 225 250 300 350 400	C: Copper Terminals E: 50% Protected Neutral Pole (4-Pole Electronic Trip Circuit Breaker Only) F: Frame Only K: High Magnetic Molded Case Switch W: Without Terminals X: Load Side Terminals Only Y: Line Side Terminals Only No Suffix Number Indicates Standard Load and Lineside Terminals

Trip Unit Catalog Number

KT 3 400 T

Trip Unit Type	Number of Poles	Trip Unit/ Rating Plug Ampere Rating	Suffix
KT: Thermal-Magnetic KES: Electronic	2: 2 Poles 3: 3 Poles 4: 4 Poles	70① 90① 100 125 150 175 200 225 250 300 350 400	LS: Electronic Trip Unit Adjustable Short Time Delay with I^2t Short Delay Ramp LSI: Electronic Trip Unit Independently Adjustable Short Time Pickup and Delay LSG: Electronic Trip Unit Adjustable Short Time Pickup with I^2t Short Delay and Ground Fault Protection LSIG: Electronic Trip Unit Independently Adjustable Short Time Pickup and Delay and Ground Fault Protection V: 50°C Calibration (Thermal-Magnetic Trip Units Only) E: 50% Protected Neutral Pole (4-Pole Electronic Trip Unit Only) Terminals Only T: Trip Unit Only

OPTIM Circuit Breaker/Frame Catalog Number

KD 3 125 T5 7 W

Circuit Breaker/ Frame Type	Number of Poles	Circuit Breaker/ Frame Ampere Rating	Trip Model	Trip Type	Suffix
KD HKD KDC CKD CHKD	3: 3 Poles	125 250 400	T5 – Model 550	2 – LSI 6 – LSIG 7 – LSIA	W: Without Terminals

Dimensions/Weights

Dimensions, Inches (mm)

Number of Poles	Width	Height	Depth
2, 3	5.5 (140)	10.125 (257)	4.063 (103)
4	7.219 (183)	10.125 (257)	4.063 (103)

Approximate Shipping Weight, Lbs. (kg)

Breaker Type	Complete Breaker		Frame Only		Trip Unit①	
	Number of Poles					
	2	3	2	3	2	3
DK	10 (4.536)	11.5 (5.216)	–	–	–	–
KDB	10 (4.536)	11.5 (5.216)	–	–	–	–
KD	10 (4.536)	11.5 (5.216)	7.5 (3.402)	8.5 (3.856)	1.5 (.680)	1.5 (.680)
HKD	10 (4.536)	11.5 (5.216)	7.5 (3.402)	8.5 (3.856)	1.5 (.680)	1.5 (.680)
KDC	10 (4.536)	11.5 (5.216)	7.5 (3.402)	8.5 (3.856)	1.5 (.680)	1.5 (.680)

① Ampere rating available with electronic trip unit only.

Allowable Accessory Combinations

Different combinations of accessories can be supplied, depending on the types of accessories and the number of poles in the circuit breaker.

	Reference Page	2-Pole①			3-Pole				4-Pole			
		Left	Right		Left	Center	Right		Left	Center	Right	Neu.
Internal Accessories (Only One Internal Accessory Per Pole)												
Alarm Lockout (Make/Break)	140		■		❑		❑		■			
Alarm Lockout (2Make/2Break)	140				❑		❑		■			
Auxiliary Switch (1A, 1B)	143		■		■		■		■		■	
Auxiliary Switch (2A, 2B)	143				■		■		■		■	
Auxiliary Switch (3A, 3B)	143				■		■		■		■	
Auxiliary Switch and Alarm Switch Combination	145				❑		❑		❑		❑	
Shunt Trip – Standard	149		■		■		■		■		■	
Shunt Trip – Low Energy	152				■		■		■			
Undervoltage Release Mechanism	156		■		■		■		■			
Cutler-Hammer PowerNet Communications Kit (OPTIM 550)	160						■					
External Accessories												
End Cap Kit	161	●			●				●			
Keeper Nut	161	●			●				●			
Control Wire Terminal Kit	162	●			●				●			
Multiwire Connectors	162	●			●				●			
Base Mounting Hardware	163	●			●				●			
Terminal Shields	165	●			●				●			
Interphase Barriers	166	●			●				●			
Non-Padlockable Handle Block	168	■				■				■		
Padlockable Handle Block	168					■						
Padlockable Handle Lock Hasp	169		■		❑		❑		❑		❑	
Cylinder Lock	169	❑	❑		❑		❑					
Key Interlock Kit	170	■	❑		❑		❑		❑		❑	
Sliding Bar Interlock – Requires Two Breakers	171				●							
Walking Beam Interlock – Requires Two Breakers	171				●				●			
Electrical (Solenoid) Operator	172				●				●			
Plug-in Adapters	174	●			●				●			
Rear Connecting Studs	176	●			●				●			
Panelboard Connecting Straps	177	●			●				●			
Handle Mechanisms	178	●			●				●			
Door Hardware/Accessories	182	●			●				●			
Handle Extension	182	●			●				●			
IQ Energy Sentinel	184				●				●			
Solid-State (Electronic) Portable Test Kit	184	●			●				●			
OPTIM System Components 3-Poles												
Breaker Interface Module (BIM)	185											
Digitrip OPTIMizer	185											
Auxiliary Power Module	185											
Cutler-Hammer PowerNet Software	185											
Modifications (Refer to Cutler-Hammer)												
Special Calibration	186	●			●				●			
Moisture Fungus Treatment	186	●			●				●			
Freeze-Tested Circuit Breakers	186	●			●				●			
Marine Application	186	●			●				●			

■ Applicable in indicated pole position

❑ May be mounted on left or right pole – not both

● Accessory available/Modification available

① 2-pole breaker supplied in 3-pole frame. Current carrying parts omitted from center pole.

Typical Series C L-Frame Circuit Breaker

- All Series C L-frame circuit breakers are HACR rated.
- L-frame circuit breakers are available as individual components (Frame, Trip Unit, Terminals), or factory assembled complete breakers. OPTIM circuit breakers are available as factory assembled only.
- L-frame circuit breakers with non-interchangeable trip units are suitable for reverse feed use.

Interrupting Capacity Ratings

UL489 Interrupting Capacity Ratings①

Circuit Breaker Type	Number of Poles	Interrupting Capacity (RMS Symmetrical Amperes) (kA)							Page Number
		Volts Ac (50/60 Hz)					Volts Dc		
		240	277	480	600	125	250②③	500	
LDB	2, 3	65	–	35	25	–	22	–	58
LD	2, 3, 4	65	–	35	25	–	22	–	57, 59
CLD	2, 3, 4	65	–	35	25	–	22	–	58, 61
HLD	2, 3, 4	100	–	65	35	–	25	–	57, 59
CHLD④	2, 3, 4	100	–	65	35	–	25	–	61
LDC	2, 3, 4	200	–	100	50	–	30	–	57, 60
CLDC④	2, 3, 4	200	–	100	50	–	30	–	62

IEC 947-2 Interrupting Capacity Ratings ①

Circuit Breaker Type	Number of Poles		Interrupting Capacity (Symmetrical Amperes) (kA)				Page Number
			Volts Ac (50/60 Hz)			Volts Dc	
			240	415	690	250②③	
LDB	2, 3	I_{cu}	85	45	20	20	58
		I_{cs}	85	45	10	10	
LD	2, 3, 4	I_{cu}	85	45	20	20	57, 59
		I_{cs}	85	45	10	10	
CLD④	2, 3, 4	I_{cu}	85	45	20	20	58, 61
		I_{cs}	85	45	10	10	
HLD	2, 3, 4	I_{cu}	100	70	25	20	57, 59
		I_{cs}	100	70	13	10	
CHLD④	2, 3, 4	I_{cu}	100	70	25	20	61
		I_{cs}	100	70	13	10	
LDC	2, 3, 4	I_{cu}	200	100	35	20	57, 60
		I_{cs}	100	75	18	10	
CLDC④	2, 3, 4	I_{cu}	200	100	35	20	62
		I_{cs}	100	75	18	10	

① Utilization category A circuit breakers.
② L/R = 8 milliseconds minimum.
③ 2-pole circuit breaker or two poles of 3-pole circuit breaker. Incorporating Thermal-Magnetic trip unit only.
④ 100% rated breakers

L-Frame Digitrip Selection Guide

Trip Unit Type	Digitrip RMS 310		Digitrip OPTIM 550	Digitrip OPTIM 750	Digitrip OPTIM 1050
RMS Sensing	Yes		Yes	Yes	Yes
Breaker Type					
Frame	L		L	L	L
Ampere Range	300-600A		200-600A	200-600A	200-600A
Interrupting Rating @ 480V	35, 65, 100 (kA)		35, 65, 100 (kA)	35, 65, 100 (kA)	35, 65, 100 (kA)
Protection					
Ordering Options	LS, LSG	LSI, LSIG	LSI, LSI(A), LSIG	LSI(A), LSIG	LSI(A), LSIG
Fixed Rated Plug (I_n)	Yes	Yes	Yes	Yes	Yes
Overtemperature Trip	Yes	Yes	Yes	Yes	Yes
Long Delay Protection (L)					
Adjustable Rating Plug (I_n)	Yes	Yes	No	No	No
Long Delay Pickup	0.5-1.0 (I_n)①	0.5-1.0 (I_n)①	0.4-1.0 x (I_n)	0.4-1.0 x (I_n)	0.4-1.0 x (I_n)
Long Delay Time I^2T	12 Seconds	12 Seconds	2-24 Seconds	2-24 Seconds	2-24 Seconds
Long Delay Time I^4T	No	No	1-5 Seconds	1-5 Seconds	1-5 Seconds
Long Delay Thermal Memory	Yes	Yes	Yes	Yes	Yes
High Load Alarm	No	No	0.5-1.0 x I_r	0.5-1.0 x I_r	0.5-1.0 x I_r
Short Delay Protection (S)					
Short Delay Pickup	200-800% x (I_n)	200-800% x (I_n)	150-800% x (I_r)	150-800% x (I_r)	150-800% x (I_r)
Short Delay Time I^2T	100 ms	No	100-500 ms	100-500 ms	100-500 ms
Short Delay Time Flat	No	Inst-300 ms	100-500 ms	100-500 ms	100-500 ms
Short Delay Time Zone Selective Interlocking	No	No	No	Yes	Yes
Instantaneous Protection (I)					
Instantaneous Pickup	No	200-800% x (I_n)	200-800% x (I_n)	200-800% x (I_n)	200-800% x (I_n)
Discriminator	No	No	Yes	Yes	Yes
Instantaneous Override	Yes	Yes	Yes	Yes	Yes
Ground Fault Protection (G)					
Ground Fault Alarm	No	No	20-100% x (I_s)	20-100% x (I_s)	20-100% x (I_s)
Ground Fault Pickup	Varies by Frame	Varies by Frame	20-100% x (I_s)	20-100% x (I_s)	20-100% x (I_s)
Ground Fault Delay I^2T	No	No	100-500 ms	100-500 ms	100-500 ms
Ground Fault Delay Flat	Inst-500 ms	Inst-500 ms	100-500 ms	100-500 ms	100-500 ms
Ground Fault Zone Selective Interlocking	No	No	No	Yes	Yes
Ground Fault Thermal Memory	Yes	Yes	Yes	Yes	Yes
System Diagnostics					
Status LEDs	Yes	Yes	Yes	Yes	Yes
Cause of Trip LEDs	No	No	Yes	Yes	Yes
Magnitude of Trip Information	No	No	Yes	Yes	Yes
Remote Signal Contact – Ground Alarm	Yes	Yes	No	Yes	Yes
Local Auxiliary and Bell Alarm Contact	Optional	Optional	Optional	Included	Included
System Monitoring					
Digital Display	No	No	Yes②	Yes②	Yes②
Current	No	No	Yes	Yes	Yes
Power and Energy	No	No	No	No	Yes
Power Quality-Harmonics	No	No	No	No	Yes
Power Factor	No	No	No	No	Yes
Communications					
Cutler-Hammer PowerNet	No	No	No③	Yes	Yes
Testing					
Testing Method	Test Set		OPTIMizer, BIM, Cutler-Hammer PowerNet		

① Adjust by rating plug.
② By OPTIMizer/BIM.
③ Cutler-Hammer PowerNet kit for field upgrade.

BIM = Breaker Interface Module
(A) = GF Alarm

I_s = Sensor Rating
I_n = Rating Plug
I_r = Long Delay Pickup Setting

Types LD, HLD, and LDC Thermal-Magnetic Circuit Breakers with Interchangeable Trip Units

Maximum Continuous Ampere Rating @ 40°C	Standard Interrupting Capacity 600 Vac Rated 35 kAIC @ 480 Vac		High Interrupting Capacity 600 Vac Rated 65 kAIC @ 480 Vac		Ultra High Interrupting Capacity Current Limiting 600 Vac Rated 100 kAIC @ 480 Vac		Thermal Magnetic Trip Unit Only For Use With: Standard or High or Ultra High Interrupting Frames Magnetic Trip Range is 5-10 x Continuous Ampere Rating	Standard Terminals Only See Page 63 for Optional Terminals
	Factory Assembled Circuit Consisting of Frame, Trip Unit, and Terminals	Frame Only	Factory Assembled Circuit Consisting of Frame, Trip Unit, and Terminals	Frame Only	Factory Assembled Circuit Consisting of Frame, Trip Unit, and Terminals	Frame Only		
	Catalog Number							
2-Pole								
300	LD2300	LD2600F	HLD2300	HLD2600F	LDC2300	LDC2600F	LT2300T	TA602LD①
350	LD2350		HLD2350		LDC2350		LT2350T	TA602LD①
400	LD2400		HLD2400		LDC2400		LT2400T	TA602LD①
450	LD2450		HLD2450		LDC2450		LT2450T	TA602LD①
500	LD2500		HLD2500		LDC2500		LT2500T	TA602LD①
600	LD2600		HLD2600		LDC2600		LT2600T	2TA603LDK②
3-Pole								
300	LD3300	LD3600F	HLD3300	HLD3600F	LDC3300	LDC3600F	LT3300T	TA602LD①
350	LD3350		HLD3350		LDC3350		LT3350T	TA602LD①
400	LD3400		HLD3400		LDC3400		LT3400T	TA602LD①
450	LD3450		HLD3450		LDC3450		LT3450T	TA602LD①
500	LD3500		HLD3500		LDC3500		LT3500T	TA602LD①
600	LD3600		HLD3600		LDC3600		LT3600T	3TA603LDK②
4-Pole③								
300	LD4300	LD4600F	HLD4300	HLD4600F	LDC4300	LDC4600F	LT4300T	TA602LD①
350	LD4350		HLD4350		LDC4350		LT4350T	TA602LD①
400	LD4400		HLD4400		LDC4400		LT4400T	TA602LD①
450	LD4450		HLD4450		LDC4450		LT4450T	TA602LD①
500	LD4500		HLD4500		LDC4500		LT4500T	TA602LD①
600	LD4600		HLD4600		LDC4600		LT4600T	4TA603LDK②

Instruction Leaflet/FRED Number 29C105 for Breaker; 29C607 for Thermal Magnetic Trip Unit

Types LD, HLD, and LDC Electronic Circuit Breakers with Interchangeable Trip Units

Order as individual components: Breaker Frame, Trip Unit, Rating Plug, Terminals.

Maximum Continuous Ampere Rating @ 40°C①	Circuit Breaker Frame Only			Digitrip RMS 310 Trip Unit Only④				Digitrip RMS 310 Rating Plug Only			Standard Terminals Only See Page 63 for Optional Terminals
	Standard Interrupting Capacity 600 Vac Rated 35 kAIC @ 480 Vac	High Interrupting Capacity 600 Vac Rated 65 kAIC @ 480 Vac	Ultra High Interrupting Capacity Current Limiting 600 Vac Rated 100 kAIC @ 480 Vac	L – Adjustable Long Delay Pickup (By Adjustable Rating Plug) S – Adjustable Short Delay Pickup with Fixed Short Delay Time (I^2t Response) or Adjustable Short Delay Time (Flat Response) I – Adjustable Instantaneous Pickup by Setting Short Delay Time to Instantaneous G – Adjustable Ground Fault Pickup with Adjustable Ground Fault Delay (Flat Response)				Ampere Rating	Fixed Rating Plug	Adjustable Rating Plug Ampere Rating Catalog Number	
	Catalog Number										
3-Pole③											
600	LD3600F	HLD3600F	LDC3600F	LES3600LS	LES3600LSI	LES3600LSG	LES3600LSIG	300 350 400 500 600	6LES300T 6LES350T 6LES400T 6LES500T 6LES600T	300/400/500/600 A6LES600T1	TA602LD① TA602LD① TA602LD① TA602LD① 3TA603LDK②
4-Pole③											
600	LD4600F	HLD4600F	LDC4600F	LES4600LS	LES4600LSI	–	–	300 350 400 500 600	6LES300T 6LES350T 6LES400T 6LES500T 6LES600T	300/400/500/600 A6LES600T1	TA602LD④ TA602LD④ TA602LD④ TA602LD④ 4TA603LDK②

Instruction Leaflet/FRED Number 29C105 for Breaker; 29C615 for LES Trip Unit

① Individually packed.
② Terminal kits contain one terminal for each pole and one terminal cover.
③ Neutral is in right pole.
④ For AC use only.

100% Rated Types CLD, CHLD, and CLDC Electronic Circuit Breakers with Interchangeable Trip Units

The NEC allows the breaker to be rated at 100% of its frame size in an assembly, provided that 90°C wire is applied at the 75°C ampacity. All 100% rated circuit breakers have electronic trip units. Order as individual components: Breaker Frame, Trip Unit, Rating Plug and Terminals.

Maximum Continuous Ampere Rating @ 40°C①	Circuit Breaker Frame Only			Digitrip RMS 310 Trip Unit Only				Digitrip RMS 310 Rating Plug Only			Standard Terminals Only
	Standard Interrupting Capacity 600 Vac Rated 35 kAIC @ 480 Vac	High Interrupting Capacity 600 Vac Rated 65 kAIC @ 480 Vac	Ultra High Interrupting Capacity Current Limiting 600 Vac Rated 100 kAIC @ 480 Vac	Standard	Options			Ampere Rating	Fixed Rating Plug	Adjustable Rating Plug	See Page 63 for Optional Terminals
				Adjustable Short Time Delay with I^2t Short Delay Ramp	Independently Adjustable Short Time Pickup and Delay Ground Fault Protection	Adjustable Short Time Pickup with I^2t Short Delay and Ground Fault Protection	Independently Adjustable Short Time Pickup and Delay and Ground Fault Protection			Ampere Rating Catalog Number	
	Catalog Number										
3-Pole											
600	CLD3600F	CHLD3600F	CLDC3600F	LES3600LS	LES3600LSI	LES3600LSG	LES3600LSIG	300 350 400 500 600	6LES300T 6LES350T 6LES400T 6LES500T 6LES600T	300/400/500/600 A6LES600T1	TA602LD② TA602LD② TA602LD② TA602LD② 3TA603LDK③

Instruction Leaflet/FRED Number 29C105 for Breaker; 29C615 for LES Trip Unit

Type LDB Thermal-Magnetic Circuit Breakers with Non-Interchangeable Trip Units

Maximum Continuous Ampere Rating	600 Vac Rated, 250 Vdc	
	Complete Circuit Breaker	
	Without Line and Load Terminals	With Standard Line and Load Terminals Only
	Catalog Number	
2-Pole		
300	LDB2300W	LDB2300
350	LDB2350W	LDB2350
400	LDB2400W	LDB2400
450	LDB2450W	LDB2450
500	LDB2500W	LDB2500
600	LDB2600W	LDB2600
3-Pole		
300	LDB3300W	LDB3300
350	LDB3350W	LDB3350
400	LDB3400W	LDB3400
450	LDB3450W	LDB3450
500	LDB3500W	LDB3500
600	LDB3600W	LDB3600

Instruction Leaflet/FRED Number 29C105 for Breaker

Molded Case Switches

Molded case switches are used as compact switches in applications requiring high current switching capabilities. Molded case switches are constructed of circuit breaker components and are of the high instantaneous automatic type.④ Molded case switches are listed in accordance with Underwriters Laboratories, Inc., Standard UL 1087.

Maximum Continuous Ampere Rating @ 40°C	600 Vac Maximum, 250 Vdc	Standard Terminals Only
	Circuit Breaker Only Without Line and Load Terminals	See Page 63 for Optional Terminals
	Catalog Number	
2-Pole		
600	LD2600WK	2TA603LDK
3-Pole		
600	LD3600WK	3TA603LDK
4-Pole		
600	LD4600WK	4TA603LDK

Note: Molded Case Switch may trip above 6000 amperes.

Instruction Leaflet/FRED Number 29C105 for Molded Case Switch

① Ampere rating is established by rating plug.
② Individually packed.
③ 3TA603LDK and 4TA603LDK terminal kits contain one terminal for each pole and one terminal cover.

Digitrip OPTIM① Electronic Circuit Breaker with Interchangeable Rating Plug

Order as individual components: Breaker Frame (which includes Trip Unit), Rating Plug, Terminals.

Maximum Continuous Ampere Rating @ 40°C	Circuit Breaker Frame Only							Digitrip OPTIM Rating Plug Only	
	L – Adjustable Long Delay Pickup (I_r) with Adjustable Long Delay Time (I^2t or I^4t Response)② S – Adjustable Short Delay Pickup with Adjustable Short Delay Time (I^2t or Flat Response) I – Adjustable Instantaneous Pickup G – Adjustable Ground Fault Pickup with Adjustable Ground Fault Time (I^2t or Flat Response) A – Adjustable Ground Fault Alarm with Adjustable Ground Fault Time (I^2t or Flat Response)							Ampere Rating	Fixed Rating Plug
	OPTIM 550			OPTIM 750		OPTIM 1050			
	LSI	LSIG	LSIA	LSIG	LSIA	LSIG	LSIA		
	Catalog Number								
3-Pole Standard Interrupting Capacity 600 Volt Ac Rated 35 kAIC @ 480 Vac									
125	–	–	–	LD3125T76W	LD3125T77W	LD3125T106W	LD3125T107W	70 90 100 110 125	ORPL125A070 ORPL125A090 ORPL125A100 ORPL125A110 ORPL125A125
250	–	–	–	LD3250T76W	LD3250T77W	LD3250T106W	LD3250T107W	125 150 175 200 225 250	ORPL025A125 ORPL025A150 ORPL025A175 ORPL025A200 ORPL025A225 ORPL025A250
400	LD3400T52W	LD3400T56W	LD3400T57W	LD3400T76W	LD3400T77W	LD3400T106W	LD3400T107W	200 225 250 300 350 400	ORPL40A200 ORPL40A225 ORPL40A250 ORPL40A300 ORPL40A350 ORPL40A400
600	LD3600T52W	LD3600T56W	LD3600T57W	LD3600T76W	LD3600T77W	LD3600T106W	LD3600T107W	300 350 400 500 600	ORPL60A300 ORPL60A350 ORPL60A400 ORPL60A500 ORPL60A600
3-Pole High Interrupting Capacity 600 Volt Ac Rated 65 kAIC @ 480 Vac									
125	–	–	–	HLD3125T76W	HLD3125T77W	HLD3125T106W	HLD3125T107W	70 90 100 110 125	ORPL125A070 ORPL125A090 ORPL125A100 ORPL125A110 ORPL125A125
250	–	–	–	HLD3250T76W	HLD3250T77W	HLD3250T106W	HLD3250T107W	125 150 175 200 225 250	ORPL025A125 ORPL025A150 ORPL025A175 ORPL025A200 ORPL025A225 ORPL025A250
400	HLD3400T52W	HLD3400T56W	HLD3400T57W	HLD3400T76W	HLD3400T77W	HLD3400T106W	HLD3400T107W	200 225 250 300 350 400	ORPL40A200 ORPL40A225 ORPL40A250 ORPL40A300 ORPL40A350 ORPL40A400
600	HLD3600T52W	HLD3600T56W	HLD3600T57W	HLD3600T76W	HLD3600T77W	HLD3600T106W	HLD3600T107W	300 350 400 500 600	ORPL60A300 ORPL60A350 ORPL60A400 ORPL60A500 ORPL60A600

Instruction Leaflet/FRED Number 29C105 for Breaker; 29C891 for OPTIM Trip Unit

① One Form C auxiliary switch and one Form C bell alarm switch supplied with breaker as standard, on models 750 and 1050.

② Long delay I^4t response selection limits short delay time to flat response.

Digitrip OPTIM① Electronic Circuit Breaker with Interchangeable Rating Plug

Order as individual components: Breaker Frame (which includes Trip Unit), Rating Plug, Terminals.

Maximum Continuous Ampere Rating @ 40°C	Circuit Breaker Frame Only							Digitrip OPTIM Rating Plug Only	
	L – Adjustable Long Delay Pickup (I_r) with Adjustable Long Delay Time (I^2t or I^4t Response)② S – Adjustable Short Delay Pickup with Adjustable Short Delay Time (I^2t or Flat Response) I – Adjustable Instantaneous Pickup G – Adjustable Ground Fault Pickup with Adjustable Ground Fault Time (I^2t or Flat Response) A – Adjustable Ground Fault Alarm with Adjustable Ground Fault Time (I^2t or Flat Response)							Ampere Rating	Fixed Rating Plug
	OPTIM 550			OPTIM 750		OPTIM 1050			
	LSI	LSIG	LSIA	LSIG	LSIA	LSIG	LSIA		
	Catalog Number								
3-Pole Ultra High Interrupting Capacity Current Limiting 600 Volt Ac Rated 100 kAIC @ 480 Vac									
125	–	–	–	LDC3125T76W	LDC3125T77W	LDC3125T106W	LDC3125T107W	70 90 100 110 125	ORPL125A070 ORPL125A090 ORPL125A100 ORPL125A110 ORPL125A125
250	–	–	–	LDC3250T76W	LDC3250T77W	LDC3250T106W	LDC3250T107W	125 150 175 200 225 250	ORPL025A125 ORPL025A150 ORPL025A175 ORPL025A200 ORPL025A225 ORPL025A250
400	LDC3400T52W	LDC3400T56W	LDC3400T57W	LDC3400T76W	LDC3400T77W	LDC3400T106W	LDC3400T107W	200 225 250 300 350 400	ORPL40A200 ORPL40A225 ORPL40A250 ORPL40A300 ORPL40A350 ORPL40A400
600	LDC3600T52W	LDC3600T56W	LDC3600T57W	LDC3600T76W	LDC3600T77W	LDC3600T106W	LDC3600T107W	300 350 400 500 600	ORPL60A300 ORPL60A350 ORPL60A400 ORPL60A500 ORPL60A600

Instruction Leaflet/FRED Number 29C105 for Breaker; 29C891 for OPTIM Trip Unit

① One Form C auxiliary switch and one Form C bell alarm switch supplied with breaker as standard, on models 750 and 1050.

② Long delay I^4t response selection limits short delay time to flat response.

100% Rated Digitrip OPTIM① Circuit Breakers with Interchangeable Rating Plug

Order as individual components: Breaker Frame (which includes Trip Unit), Rating Plug, Terminals.

Maximum Continuous Ampere Rating @ 40°C	Circuit Breaker Frame Only							Digitrip OPTIM Rating Plug Only	
	L – Adjustable Long Delay Pickup (I_r) with Adjustable Long Delay Time (I^2t or I^4t Response)② S – Adjustable Short Delay Pickup with Adjustable Short Delay Time (I^2t or Flat Response) I – Adjustable Instantaneous Pickup G – Adjustable Ground Fault Pickup with Adjustable Ground Fault Time (I^2t or Flat Response) A – Adjustable Ground Fault Alarm with Adjustable Ground Fault Time (I^2t or Flat Response)							Ampere Rating	Fixed Rating Plug
	OPTIM 550			OPTIM 750		OPTIM 1050			
	LSI	LSIG	LSIA	LSIG	LSIA	LSIG	LSIA		
	Catalog Number								
3-Pole Standard Interrupting Capacity 600 Volt Ac Rated 35 kAIC @ 480 Vac									
125	–	–	–	CLD3125T76W	CLD3125T77W	CLD3125T106W	CLD3125T107W	70 90 100 110 125	ORPL125A07 ORPL125A09 ORPL125A10 ORPL125A11 ORPL125A125
250	–	–	–	CLD3250T76W	CLD3250T77W	CLD3250T106W	CLD3250T107W	125 150 175 200 225 250	ORPL025A12 ORPL025A15 ORPL025A17 ORPL025A20 ORPL025A22 ORPL025A250
400	CLD3400T52W	CLD3400T56W	CLD3400T57W	CLD3400T76W	CLD3400T77W	CLD3400T106W	CLD3400T107W	200 225 250 300 350 400	ORPL40A200 ORPL40A225 ORPL40A250 ORPL40A300 ORPL40A350 ORPL40A400
600	CLD3600T52W	CLD3600T56W	CLD3600T57W	CLD3600T76W	CLD3600T77W	CLD3600T106W	CLD3600T107W	300 350 400 500 600	ORPL60A300 ORPL60A350 ORPL60A400 ORPL60A500 ORPL60A600
3-Pole High Interrupting Capacity 600 Volt Ac Rated 65 kAIC @ 480 Vac									
125	–	–	–	CHLD3125T76W	CHLD3125T77W	CHLD3125T106W	CHLD3125T107W	70 90 100 110 125	ORPL125A070 ORPL125A090 ORPL125A100 ORPL125A110 ORPL125A125
250	–	–	–	CHLD3250T76W	CHLD3250T77W	CHLD3250T106W	CHLD3250T107W	125 150 175 200 225 250	ORPL025A125 ORPL025A150 ORPL025A175 ORPL025A200 ORPL025A225 ORPL025A250
400	CHLD3400T52W	CHLD3400T56W	CHLD3400T57W	CHLD3400T76W	CHLD3400T77W	CHLD3400T106W	CHLD3400T107W	200 225 250 300 350 400	ORPL40A200 ORPL40A225 ORPL40A250 ORPL40A300 ORPL40A350 ORPL40A400
600	CHLD3600T52W	CHLD3600T56W	CHLD3600T57W	CHLD3600T76W	CHLD3600T77W	CHLD3600T106W	CHLD3600T107W	300 350 400 500 600	ORPL60A300 ORPL60A350 ORPL60A400 ORPL60A500 ORPL60A600

Instruction Leaflet/FRED Number 29C105 for Breaker; 29C891 for OPTIM Trip Unit

① One Form C auxiliary switch and one Form C bell alarm switch supplied with breaker as standard, on models 750 and 1050.
② Long delay I^4t response selection limits short delay time to flat response.

100% Rated Digitrip OPTIM① Electronic Circuit Breaker with Interchangeable Rating Plug

Order as individual components: Breaker Frame (which includes Trip Unit), Rating Plug, Terminals.

Maximum Continuous Ampere Rating @ 40°C	Circuit Breaker Frame Only							Digitrip OPTIM Rating Plug Only	
	L – Adjustable Long Delay Pickup (I_r) with Adjustable Long Delay Time (I^2t or I^4t Response)② S – Adjustable Short Delay Pickup with Adjustable Short Delay Time (I^2t or Flat Response) I – Adjustable Instantaneous Pickup G – Adjustable Ground Fault Pickup with Adjustable Ground Fault Time (I^2t or Flat Response) A – Adjustable Ground Fault Alarm with Adjustable Ground Fault Time (I^2t or Flat Response)							Ampere Rating	Fixed Rating Plug
	OPTIM 550			OPTIM 750		OPTIM 1050			
	LSI	LSIG	LSIA	LSIG	LSIA	LSIG	LSIA		
	Catalog Number								
3-Pole Ultra High Interrupting Capacity Current Limiting 600 Volt Ac Rated 100 kAIC @ 480 Vac									
125	–	–	–	CLDC3125T76W	CLDC3125T77W	CLDC3125T106W	CLDC3125T107W	70 90 100 110 125	ORPL125A070 ORPL125A090 ORPL125A100 ORPL125A110 ORPL125A125
250	–	–	–	CLDC3250T76W	CLDC3250T77W	CLDC3250T106W	CLDC3250T107W	125 150 175 200 225 250	ORPL025A125 ORPL025A150 ORPL025A175 ORPL025A200 ORPL025A225 ORPL025A250
400	CLDC3400T52W	CLDC3400T56W	CLDC3400T57W	CLDC3400T76W	CLDC3400T77W	CLDC3400T106W	CLDC3400T107W	200 225 250 300 350 400	ORPL40A200 ORPL40A225 ORPL40A250 ORPL40A300 ORPL40A350 ORPL40A400
600	CLDC3600T52W	CLDC3600T56W	CLDC3600T57W	CLDC3600T76W	CLDC3600T77W	CLDC3600T106W	CLDC3600T107W	300 350 400 500 600	ORPL60A300 ORPL60A350 ORPL60A400 ORPL60A500 ORPL60A600

Instruction Leaflet/FRED Number 29C105 for Breaker; 29C891 for OPTIM Trip Unit

① One Form C auxiliary switch and one Form C bell alarm switch supplied with breaker as standard, on models 750 and 1050.

② Long delay I^4t response selection limits short delay time to flat response.

Line and Load Terminals

Line and load terminals provide wire connecting capabilities for specific ranges of continuous current ratings and wire types. All terminals comply with Underwriters Laboratories, Inc., Standards UL486A and UL486B and CSA Standard C22.2 No. 65M. Unless otherwise specified, L-frame circuit breaker line and load terminals are shipped separately for field installation.

The wire connecting terminal is secured with two pan-head, slotted screws and lock washers which can be checked for the correct torque loading or retightened from the front of the circuit breaker before installation of the conductors. (Applies to all styles.) The circuit breaker line/load terminal conductors are positioned in the conducting holes in the wire connecting terminal and are secured with recessed socket screws which are tightened to the correct torque loading from the front of the circuit breaker.

Ordering Information

L-frame circuit breakers use Cu/Al terminals as standard. When optional copper terminals are required, order by catalog number. Specify if factory installation is required.

Line and Load Terminals

Maximum Breaker Amperes	Terminal Body Material	Wire Type	AWG Wire Range/ Number of Conductors	Metric Wire Range mm^2	Terminal Catalog Number	Terminals with Control Wire Termination Catalog Numbers
Standard Cu/Al Pressure Terminals						
400	Aluminum	Cu/Al	4/0-600 (1)	120-300	**2TA401LDK**– 2-Pole Kit①	–
					3TA401LDK– 3-Pole Kit①	–
					4TA401LDK– 4-Pole Kit①	–
450	Aluminum	Cu/Al	4-4/0 (2)	25-95	**TA450LD**②	–
500	Aluminum	Cu/Al	3/0-350 (2)	95-150	**TA602LD**②	**TA602LDCW**
600	Aluminum	Cu/Al	400-500 (2)	185-240	**2TA603LDK**– 2-Pole Kit①	**2TA602LDKW**
					3TA603LDK– 3-Pole Kit①	**3TA602LDKW**
					4TA603LDK– 4-Pole Kit①	**4TA602LDKW**
Optional Copper and Cu/Al Pressure Type Terminals						
600	Copper	Cu	250-500 (2)	120-250	**T602LD**②	–

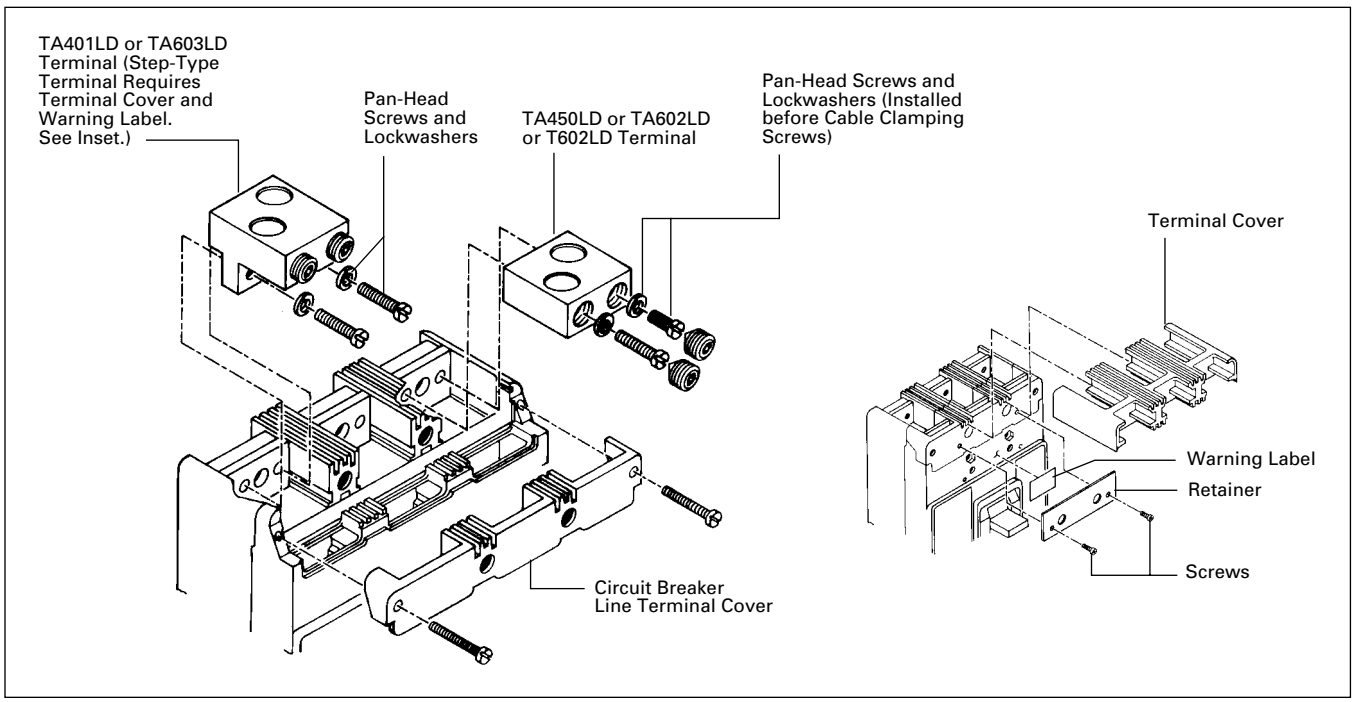

① Terminal kits contain one terminal for each pole and one terminal cover.
② Individually packed.

Catalog Numbering System

This information is presented only as an aid to understanding catalog numbers. It is not to be used to build catalog numbers for circuit breakers or trip units.

Circuit Breaker/Frame Catalog Number

LD 3 600 F

Circuit Breaker/ Frame Type	Number of Poles	Circuit Breaker/ Frame Ampere Rating	Suffix
LDB LD HLD LDC CLD CHLD CLDC	2: 2 Poles 3: 3 Poles 4: 4 Poles	300 350 400 450 500 600	C: Copper Terminals F: Frame Only K: High Magnetic Molded Case Switch V: 50°C (Thermal-Magnetic Trip Units Only) W: Without Terminals X: Load Side Terminals Only Y: Line Side Terminals Only

Thermal-Magnetic Trip Unit Catalog Number

LT 3 400 T

Trip Unit Type	Number of Poles	Trip Unit/ Rating Plug Ampere Rating	Suffix
LT: Thermal-Magnetic	2: 2 Poles 3: 3 Poles 4: 4 Poles	300 350 400 450 500 600	T: Trip Unit Thermal-Magnetic Fixed Thermal Adjustable Magnetic V: 50°C Calibration (Thermal-Magnetic Trip Units Only)

OPTIM Circuit Breaker/Frame Catalog Number

LD 3 125 T5 7 W

Circuit Breaker/ Frame Type	Number of Poles	Circuit Breaker/ Frame Ampere Rating	Trip Model	Trip Type	Suffix
LD HLD LDC CLD CHLD CLDC	3: 3 Poles	125 (Available on Model 750 and 1050 only) 250 (Available on Model 750 and 1050 only) 400 600	T5 – Model 550 T7 – Model 750 T10 – Model 1050	2 – LSI (550 only) 6 – LSIG 7 – LSIA	W: Without Terminals

Digitrip RMS 310 Trip Unit Catalog Number

LES 3 600 LS P

Trip Unit Type	Number of Poles	Trip Unit Ampere Rating	Suffix	Suffix
LES: Electronic	3: 3 Poles 4: 4 Poles	600	LS LSI LSG LSIG	P: 100% Protected Neutral on 4-Pole Trip Unit

Dimensions/Weights

Dimensions, Inches (mm)

Number of Poles	Width	Height	Depth
2, 3	8.25 (210)	10.75 (274)	4.062 (103)
4	11 (279)	10.75 (274)	4.062 (103)

Approximate Shipping Weight, Lbs. (kg)

Breaker Type	Complete Breaker			Frame Only			Trip Unit		
	Number of Poles								
	2	3	4	2	3	4	2	3	4
LD, HLD, LDC	18 (8.172)	20 (9.080)	25 (11.340)	14 (6.356)	15 (6.810)	20 (9.072)	3 (1.361)	4 (1.814)	5 (2.268)
LDB	18 (8.172)	20 (9.080)	25 (11.340)	–	–	–	–	–	–

Allowable Accessory Combinations

Different combinations of accessories can be supplied, depending on the types of accessories and the number of poles in the circuit breaker.

	Reference Page		2-Pole①, 3-Pole				4-Pole			
			Left	Center	Right		Left	Center	Right	Neu.②
Internal Accessories (Only One Internal Accessory Per Pole)③										
Alarm Lockout (Make/Break)	140		■		■		■		■	
Alarm Lockout (2Make/2Break)	140		■		■		■		■	
Auxiliary Switch (1A, 1B)	143		■		■		■		■	
Auxiliary Switch (2A, 2B)	143		■		■		■		■	
Auxiliary Switch (3A, 3B)	143		■		■		■		■	
Auxiliary Switch (1A, 1B) and Alarm Switch Combination	146		■		■		■		■	
Auxiliary Switch (2A, 2B) and Alarm Switch Combination	146		■		■		■		■	
Shunt Trip – Standard④	149		■		■		■		■	
Shunt Trip – Low Energy④	152		■		■		■		■	
Undervoltage Release Mechanism④	157		■		■		■		■	
Cutler-Hammer PowerNet Communications Kit (OPTIM 550)	160				■					
External Accessories										
End Cap Kit	161			●				●		
Control Wire Terminal Kit	162			●				●		
Base Mounting Hardware	163			●				●		
Terminal Shields	165			●				●		
Interphase Barriers	166			●				●		
Non-Padlockable Handle Block	168			■				■		
Padlockable Handle Lock Hasp	169		❑		❑		❑		❑	
Key Interlock Kit	170		❑		❑		❑		❑	
Sliding Bar Interlock – Requires Two Breakers	171			●						
Walking Beam Interlock – Requires Two Breakers	171			●				●		
Electrical (Motor) Operator	173			●				●		
Plug-in Adapters	174			●				●		
Rear Connecting Studs	176			●				●		
Panelboard Connecting Straps	177			●				●		
Handle Mechanisms	178			●				●		
Door Hardware/Accessories	182			●				●		
Handle Extension	182			●				●		
Solid-State (Electronic) Portable Test Kit	184			●				●		
OPTIM System Components 3-Poles										
Ground Fault Alarm Unit	184									
Potential Transformer Module	184									
Breaker Interface Module (BIM)	185									
Digitrip OPTIMizer	185									
Auxiliary Power Module	185									
Cutler-Hammer PowerNet Software	185									
Modifications (Refer to Cutler-Hammer)										
Special Calibration	186			●				●		
Moisture Fungus Treatment	186			●				●		
Freeze-Tested Circuit Breakers	186			●				●		
Marine Application	186			●				●		

■ Applicable in indicated pole position

❑ May be mounted on left or right pole – not both

● Accessory available/Modification available

① 2-pole breaker supplied in 3-pole frame. Current carrying parts omitted from center pole.
② Refer to Cutler-Hammer for appropriate neutral pole accessory combinations.
③ OPTIM models 750 and 1050 are factory sealed and do not have the right pole space available for accessories.
④ Shunt trip and UVR cannot be mounted in right poles on LES trip units.

Typical Series C M-Frame Circuit Breaker

- All Series C M-frame circuit breakers are HACR rated.
- MDL-frame circuit breakers are available as individual components (Frame, Trip Unit, Terminals), or factory assembled complete breakers.
- M-frame circuit breakers with non-interchangeable trip units are suitable for reverse feed use.

Interrupting Capacity Ratings

UL489/CSA Interrupting Capacity Ratings①

Circuit Breaker Type	Number of Poles	Interrupting Capacity (Symmetrical Amperes) (kA)				Page Number
		Volts Ac (50/60 Hz)			Volts Dc②③	
		240	480	600	250	
MDL	2, 3	65	50	25	22	69, 70
CMDL	2, 3	65	50	25	22	70
HMDL	2, 3	100	65	35	25	69, 70
CHMDL	2, 3	100	65	35	25	70

IEC 947-2 Interrupting Capacity Ratings①

Circuit Breaker Type	Number of Poles	Interrupting Capacity – RMS Symmetrical Amperes (kA) $I_{CU} = I_{CS}$				Page Number
		Volts Ac (50/60 Hz)			Volts Dc②③	
		240	480	600	250	
MDL	2, 3	85	50	20	20	69, 70
CMDL	2, 3	85	50	20	20	70
HMDL	2, 3	100	65	25	20	69, 70
CHMDL	2, 3	100	65	25	20	70

① Utilization category A circuit breakers.
② Two poles or two poles of 3-pole circuit breaker. Thermal-magnetic trip units only, MDL, HMDL breakers with electronic trip unit are not DC rated.
③ Time constant is 3 milliseconds minimum at 10 kA and 8 milliseconds at 22 kA.

MDL-Frame Digitrip Selection Guide

Trip Unit Type	Digitrip RMS 310	
RMS Sensing	Yes	
Breaker Type		
Frame	MDL	
Ampere Range	400-800A	
Interrupting Rating @ 480V	50, 65 (kA)	
Protection		
Ordering Options	LS, LSG	LSI, LSIG
Fixed Rated Plug (I_n)	Yes	Yes
Overtemperature Trip	Yes	Yes
Long Delay Protection (L)		
Adjustable Rating Plug (I_n)	Yes	Yes
Long Delay Pickup	0.5-1.0 (I_n) ①	0.5-1.0 (I_n) ①
Long Delay Time I^2T	12 Seconds	12 Seconds
Long Delay Time I^4T	No	No
Long Delay Thermal Memory	Yes	Yes
High Load Alarm	No	No
Short Delay Protection (S)		
Short Delay Pickup	200-800% x (I_n)	200-800% x (I_n)
Short Delay Time I^2T	100 ms	No
Short Delay Time Flat	No	Inst-300 ms
Short Delay Time Zone Selective Interlocking	No	No
Instantaneous Protection (I)		
Instantaneous Pickup	No	200-800% x (I_n)
Discriminator	No	No
Instantaneous Override	Yes	Yes
Ground Fault Protection (G)		
Ground Fault Alarm	No	No
Ground Fault Pickup	Varies by Frame	Varies by Frame
Ground Fault Delay I^2T	No	No
Ground Fault Delay Flat	Inst-500 ms	Inst-500 ms
Ground Fault Zone Selective Interlocking	No	No
Ground Fault Thermal Memory	Yes	Yes
System Diagnostics		
Status LEDs	Yes	Yes
Cause of Trip LEDs	No	No
Magnitude of Trip Information	No	No
Remote Signal Contacts – Ground Alarm	Yes	Yes
System Monitoring		
Digital Display	No	No
Current	No	No
Power and Energy	No	No
Power Quality – Harmonics	No	No
Power Factor	No	No
Communications		
Cutler-Hammer PowerNet	No	No
Testing		
Testing Method	Test Set	

① Adjust by rating plug.

I_n = Rating Plug

Types MDL and HMDL Thermal-Magnetic Circuit Breakers with Interchangeable Trip Units

Maximum Continuous Ampere Rating @ 40°C	Standard Interrupting Capacity 600 Vac Rated 50 kAIC @ 480 Vac		High Interrupting Capacity 600 Vac Rated 65 kAIC @ 480 Vac		Thermal Magnetic Trip Unit Only For Use With: Standard or High or Ultra High Interrupting Frames Magnetic Trip Range is 5-10 up through 600A; 4-8 on 700 and 800A x Continuous Ampere Rating	Standard Terminals Only ① See Page 72 for Optional Terminals
	Factory Assembled Circuit Consisting of Frame, Trip Unit, and Terminals	Frame Only	Factory Assembled Circuit Consisting of Frame, Trip Unit, and Terminals	Frame Only		
	Catalog Number					
2-Pole						
300	MDL2300	MDL2800F	HMDL2300	HMDL2800F	MT2300T	TA700MA1
350	MDL2350		HMDL2350		MT2350T	TA700MA1
400	MDL2400		HMDL2400		MT2400T	TA700MA1
450	MDL2450		HMDL2450		MT2450T	TA700MA1
500	MDL2500		HMDL2500		MT2500T	TA700MA1
600	MDL2600		HMDL2600		MT2600T	TA700MA1
700	MDL2700		HMDL2700		MT2700T	TA700MA1
800	MDL2800		HMDL2800		MT2800T	TA800MA2
3-Pole						
300	MDL3300	MDL3800F	HMDL3300	HMDL3800F	MT3300T	TA700MA1
350	MDL3350		HMDL3350		MT3350T	TA700MA1
400	MDL3400		HMDL3400		MT3400T	TA700MA1
450	MDL3450		HMDL3450		MT3450T	TA700MA1
500	MDL3500		HMDL3500		MT3500T	TA700MA1
600	MDL3600		HMDL3600		MT3600T	TA700MA1
700	MDL3700		HMDL3700		MT3700T	TA700MA1
800	MDL3800		HMDL3800		MT3800T	TA800MA2

Instruction Leaflet/FRED Number 29C111 for Breaker

Types MDLB and HMDLB Thermal-Magnetic Circuit Breakers with Non-Interchangeable Trip Units

Maximum Continuous Ampere Rating @ 40°C	Standard Interrupting Capacity 600 Vac Rated 50 kAIC @ 480 Vac	High Interrupting Capacity 600 Vac Rated 50 kAIC @ 480 Vac	Standard Terminals Only ① See Page 72 for Optional Terminals
	Factory Assembled Circuit Consisting of Frame, Trip Unit, and Terminals	Factory Assembled Circuit Consisting of Frame, Trip Unit, and Terminals	
	Catalog Number		
2-Pole			
300	MDLB2300	HMDLB2300	TA700MA1
350	MDLB2350	HMDLB2350	TA700MA1
400	MDLB2400	HMDLB2400	TA700MA1
450	MDLB2450	HMDLB2450	TA700MA1
500	MDLB2500	HMDLB2500	TA700MA1
600	MDLB2600	HMDLB2600	TA700MA1
700	MDLB2700	HMDLB2700	TA700MA1
800	MDLB2800	HMDLB2800	TA800MA2
3-Pole			
300	MDLB3300	HMDLB3300	TA700MA1
350	MDLB3350	HMDLB3350	TA700MA1
400	MDLB3400	HMDLB3400	TA700MA1
450	MDLB3450	HMDLB3450	TA700MA1
500	MDLB3500	HMDLB3500	TA700MA1
600	MDLB3600	HMDLB3600	TA700MA1
700	MDLB3700	HMDLB3700	TA700MA1
800	MDLB3800	HMDLB3800	TA800MA2

Instruction Leaflet/FRED Number 29C111 for Breaker

① Two terminals are required per pole.

Types MDL and HMDL Electronic Circuit Breakers with Interchangeable Trip Units

Order as Individual Components: Breaker Frame, Trip Unit, Rating Plug, Terminals.

Maximum Continuous Ampere Rating @ 40°C①	Circuit Breaker Frame Only		Digitrip RMS 310 Trip Unit Only②	Digitrip RMS 310 Rating Plug Only			Terminals
	Standard Interrupting Capacity 600 Vac Rated 35 kAIC @ 480 Vac	High Interrupting Capacity 600 Vac Rated 65 kAIC @ 480 Vac	L – Adjustable Long Delay Pickup (by Adjustable Rating Plug) S – Adjustable Short Delay Pickup with Fixed Short Delay Time (I^2t Response) or Adjustable Short Delay Time (Flat Response) I – Adjustable Instantaneous Pickup by Setting Short Delay Time to Instantaneous G – Adjustable Ground Fault Pickup with Adjustable Ground Fault Delay (Flat Response)	Ampere Rating	Fixed Rating Plug	Adjustable Rating Plugs Ampere Rating Catalog Number	
	Catalog Number						
3-Pole							
800	**MDL3800F**	**HMDL3800F**	**MES3800LS** **MES3800LSI** **MES3800LSG** **MES3800LSIG**	400 500 600 700 800	**8MES400T** **8MES500T** **8MES600T** **8MES700T** **8MES800T**	400/500/600/800 **A8MES800T**	See Page 72 for Standard and Optional Terminals

Instruction Leaflet/FRED Number 29C111 for Breaker; 29C615 for MES Trip Unit

Types MDLB and HMDLB Electronic Circuit Breakers with Non-Interchangeable Trip Units

Maximum Continuous Ampere Rating @ 40°C①	Factory Assembled Circuit Breaker Consisting of Frame and Trip Unit			
	LS	LSI	LSG	LSIG
	Catalog Number			
3-Pole Standard Interrupting Capacity 600 Vac Rated 50 kAIC @ 480 Vac				
800	**MDLB3800T33W**	**MDLB3800T32W**	**MDLB3800T35W**	**MDLB3800T36W**
3-Pole High Interrupting Capacity 600 Vac Rated 65 kAIC @ 480 Vac				
800	**HMDLB3800T33W**	**HMDLB3800T32W**	**HMDLB3800T35W**	**HMDLB3800T36W**

Instruction Leaflet/FRED Number 29C111 for Breaker; 29C615 for MES Trip Unit

100% Rated Types CMDL and CHMDL Electronic Circuit Breakers with Non-Interchangeable Trip Units

The NEC allows the breaker to be rated at 100% of its frame size in an assembly, provided that 90°C wire is applied at the 75°C ampacity. All 100% rated circuit breakers have electronic trip units. Order as individual components: breaker frame, trip unit, rating plug and terminals.

Maximum Continuous Ampere Rating @ 40°C①	Circuit Breaker Frame Only		Digitrip RMS 310 Trip Unit Only②				Digitrip RMS 310 Trip Unit Only			Terminals
	Standard Interrupting Capacity 50 kAIC @ 480 Vac	High Interrupting Capacity 50 kAIC @ 480 Vac	Standard	Options			Ampere Rating	Fixed Rating Plug	Adjustable Rating Plug	
			Adjustable Short Time Delay with I^2t Short Delay Ramp	Independently Adjustable Short Time Pickup and Delay Ground Fault Protection	Adjustable Short Time Pickup with I^2t Short Delay and Ground Fault Protection	Independently Adjustable Short Time Pickup and Ground Fault Protection			Ampere Rating Catalog Number	
	Catalog Number									
3-Pole										
800	**CMDL3800F**	**CHMDL3800F**	**MES3800LS**	**MES3800LSI**	**MES3800LSG**	**MES3800LSIG**	400 500 600 700 800	**8MES400T** **8MES500T** **8MES600T** **8MES700T** **8MES800T**	400/500/600/800 **A8MES800T**	See Page 72 for Standard and Optional Terminals

Instruction Leaflet/FRED Number 29C111 for Breaker; 29C615 for MES Trip Unit

① Ampere rating is established by rating plug.
② For Ac use only.

Molded Case Switches

Molded case switches are used as compact switches in applications requiring high current switching capabilities. Molded case switches are constructed of circuit breaker components and are of the high instantaneous automatic type. Molded case switches are listed in accordance with Underwriters Laboratories, Inc., Standard UL 1087.

Maximum Continuous Ampere Rating @ 40°C	600 Vac Maximum, 250 Vdc Circuit Breaker Only without Line and Load Terminals Catalog Number
2-Pole	
800	**MDL2800WK**
3-Pole	
800	**MDL3800WK**

Note: Molded case switch may trip above 6000 amperes.

Instruction Leaflet/FRED Number 29C111

Line and Load Terminals

M-Frame circuit breakers use Cu/Al terminals as standard. When optional copper or Cu/Al terminals are required, order by catalog number. Specify if factory installation is required.

Line and Load Terminals

Maximum Breaker Amperes	Terminal Body Material	Wire Type	AWG Wire Range/ No. Conductors	Terminal Catalog Number	Terminals with Control Wire Termination Catalog Number
Standard Cu/Al Pressure Terminals					
600	Aluminum	Cu/Al	(2) #1-500 kcmil	**TA700MA1**	**TA700MA1CWT**
800	Aluminum	Cu/Al	(3) 3/0-400 kcmil	**TA800MA2**	**TA800MA2CWT**
800	Aluminum	Cu/Al	(2) 500-750 kcmil	**TA801MA**	**TA801MACWT**
Optional Copper and Cu/Al Pressure Type Terminals					
600	Copper	Cu	(2) 2/0-500 kcmil	**T600MA1**	–
800	Copper	Cu	(3) 3/0-300 kcmil	**T800MA1**	–

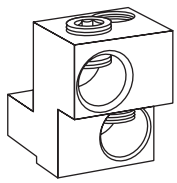

TA700MA1

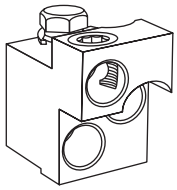

TA800MA2

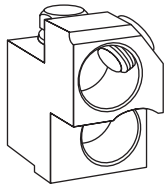

TA801MA1

Catalog Numbering System

This information is presented only as an aid to understanding catalog numbers. It is not to be used to build catalog numbers for circuit breakers or trip units.

Circuit Breaker/Frame Catalog Number

MDL 3 800 F

Circuit Breaker/ Frame Type	Number of Poles	Circuit Breaker/ Frame Ampere Rating	Suffix
MDL HMDL	2: 2 Poles 3: 3 Poles	300① 350① 400 450 500 600 700 800	F: Frame Only K: High Magnetic Molded Case Switch V: 50°C (Thermal-Magnetic Trip Units Only) W: Without Terminals X: Load Side Terminals Only Y: Line Side Terminals Only

Thermal-Magnetic Trip Unit Catalog Number

MT 3 800 T

Trip Unit Type	Number of Poles	Trip Unit/ Rating Plug Ampere Rating	Suffix
MT: MES:	2: 2 Poles 3: 3 Poles	300① 350① 400 450 500 600 700 800	T: Thermal-Magnetic V: 50°C (Thermal-Magnetic Trip Units Only) LS: Digitrip RMS 310 LSI: Digitrip RMS 310 LSG: Digitrip RMS 310 LSIG: Digitrip RMS 310

Dimensions/Weights

Dimensions, Inches (mm)

Number of Poles	Width	Height	Depth
2, 3	8.250 (210)	16.000 (406)	4.062 (103)

Approximate Shipping Weight, Lbs. (kg)

Breaker Type	Complete Breaker		Frame Only		Trip Unit①	
	Number of Poles					
	2	3	2	3	2	3
MDL, HMDL (T/M T.U.)	26.5	29	24.5	26	2.5	3
MDL, HMDL (Elec. T.U.)	–	30	–	26	–	4

① Thermal-Magnetic only.

Allowable Accessory Combinations

Different combinations of accessories can be supplied, depending on the types of accessories and the number of poles in the circuit breaker.

	Reference Page	2-Pole①			3-Pole			
		Left	Right		Left	Center	Right	
Internal Accessories (Only One Internal Accessory Per Pole)								
Alarm Lockout (Make/Break)	140	■			■		■	
Alarm Lockout (2Make/2Break)	140	■			■		■	
Auxiliary Switch (1A, 1B)	143	■			■		■	
Auxiliary Switch (2A, 2B)	143	■			■		■	
Auxiliary Switch (3A, 3B)	143	■			■		■	
Auxiliary Switch (1A, 1B) and Alarm Switch Combination	146	■			■		■	
Auxiliary Switch (2A, 2B) and Alarm Switch Combination	146	■			■		■	
Shunt Trip – Standard③	149	■			■		■	
Shunt Trip – Low Energy③	152	■			■		■	
Undervoltage Release Mechanism③	157	■			■		■	
External Accessories								
Base Mounting Hardware	163					●		
Terminal Shields	165					●		
Interphase Barriers	166					●		
Non-Padlockable Handle Block	168					■		
Padlockable Handle Lock Hasp	169	❑			❑		❑	
Key Interlock Kit	170	❑			❑		❑	
Sliding Bar Interlock – Requires Two Breakers	171	●			●			
Walking Beam Interlock – Requires Two Breakers	171	●			●			
Electrical (Motor) Operator	173	●			●			
Plug-in Adapters	174	●			●			
Rear Connecting Studs	176	●			●			
Panelboard Connecting Straps	177	●			●			
Handle Mechanisms	178	●			●			
Door Hardware/Accessories	182	●			●			
Handle Extension	182					●		
Solid-State (Electronic) Portable Test Kit	184	●			●			
Modifications (Refer to Cutler-Hammer)								
Special Calibration	186	●			●			
Moisture Fungus Treatment	186	●			●			
Freeze-Tested Circuit Breakers	186	●			●			
Marine Application	186	●			●			

■ Applicable in indicated pole position

❑ May be mounted on left or right pole – not both

● Accessory available/Modification available

① 2-pole breaker supplied in 3-pole frame. Current carrying parts omitted from center pole.
② Refer to Cutler-Hammer for appropriate neutral pole accessory combinations.
③ Shunt trip and UVR cannot be mounted in right poles on LES trip units.

Typical Series C N-Frame Circuit Breaker

- All N-frame circuit breakers are suitable for reverse feed use.

Interrupting Capacity Ratings

UL489 Interrupting Capacity Ratings①

Circuit Breaker Type	Number of Poles	Interrupting Capacity (Symmetrical Amperes) (kA) Volts Ac (50/60 Hz) 240	277	480	600	125	Page Number
ND	2, 3, 4	65	–	50	25	–	77, 83
CND②	2, 3, 4	65	–	50	25	–	80, 84
HND	2, 3, 4	100	–	65	35	–	78, 83
CHND②	2, 3, 4	100	–	65	35	–	81, 84
NDC	2, 3, 4	200	–	100	50	–	79, 83
CNDC②	2, 3, 4	200	–	100	50	–	82, 84

IEC 947-2 Interrupting Capacity Ratings①

Circuit Breaker Type	Number of Poles	Interrupting Capacity (Symmetrical Amperes) (kA) Volts Ac (50/60 Hz) 240	415	690	Page Number
ND	2, 3, 4				77, 83
I_{cu}		85	50	20	
I_{cs}		85	50	10	
CND②	2, 3, 4				80, 84
I_{cu}		85	50	20	
I_{cs}		85	50	10	
HND	2, 3, 4				78, 83
I_{cu}		100	70	25	
I_{cs}		100	50	13	
CHND②	2, 3, 4				81, 84
I_{cu}		100	70	25	
I_{cs}		100	50	13	
NDC	2, 3, 4				79, 83
I_{cu}		200	100	35	
I_{cs}		100	50	18	
CNDC②	2, 3, 4				82, 84
I_{cu}		200	100	35	
I_{cs}		100	50	18	

① Utilization Category A circuit breakers.
② 100% rated breakers.

N-Frame Digitrip Selection Guide

Trip Unit Type	Digitrip RMS 310		Digitrip OPTIM 550	Digitrip OPTIM 750	Digitrip OPTIM 1050
RMS Sensing	Yes		Yes	Yes	Yes
Breaker Type					
Frame	N		N	N	N
Ampere Range	400A-1200A		400A-1200A	400A-1200A	400A-1200A
Interrupting Rating @ 480V	50, 65, 100 (kA)		50, 65, 100 (kA)	50, 65, 100 (kA)	50, 65, 100 (kA)
Protection					
Ordering Options	LS, LSG	LSI, LSIG	LSI, LSIG, LSI(A)	LSI(A), LSIG	LSI(A), LISG
Fixed Rated Plug (I_n)	Yes	Yes	Yes	Yes	Yes
Overtemperature Trip	Yes	Yes	Yes	Yes	Yes
Long Delay Protection (L)					
Adjustable Rating Plug (I_n)	Yes	Yes	No	No	No
Long Delay Pickup	0.5-1.0 (I_n)①	0.5-1.0 (I_n)①	0.4-1.0 x (I_n)	0.4-1.0 x (I_n)	0.4-1.0 x (I_n)
Long Delay Time I^2T	12 Seconds	12 Seconds	2-24 Seconds	2-24 Seconds	2-24 Seconds
Long Delay Time I^4T	No	No	1-5 Seconds	1-5 Seconds	1-5 Seconds
Long Delay Thermal Memory	Yes	Yes	Yes	Yes	Yes
High Load Alarm	No	No	No	0.5-1.0 x I_r	0.5-1.0 x I_r
Short Delay Protection (S)					
Short Delay Pickup	200-800% x (I_n)	200-800% x (I_n)	150-800% x (I_r)	150-800% x (I_r)	150-800% x (I_r)
Short Delay Time I^2T	100 ms	No	100-500 ms	100-500 ms	100-500 ms
Short Delay Time Flat	No	Inst-300 ms	100-500 ms	100-500 ms	100-500 ms
Short Delay Time Zone Selective Interlocking	No	No	Yes	Yes	Yes
Instantaneous Protection (I)					
Instantaneous Pickup	No	200-800% x (I_n)	200-800% x (I_n)	200-800% x (I_n)	200-800% x (I_n)
Discriminator	No	No	Yes	Yes	Yes
Instantaneous Override	Yes	Yes	Yes	Yes	Yes
Ground Fault Protection (G)					
Ground Fault Alarm	No	No	20-100% x (I_s)	20-100% x (I_s)	20-100% x (I_s)
Ground Fault Pickup	Varies by Frame②	Varies by Frame②	20-100% x (I_s)	20-100% x (I_s)	20-100% x (I_s)
Ground Fault Delay I^2T	No	No	100-500 ms	100-500 ms	100-500 ms
Ground Fault Delay Flat	Inst-500 ms	Inst-500 ms	100-500 ms	100-500 ms	100-500 ms
Ground Fault Zone Selective Interlocking	No	No	No	Yes	Yes
Ground Fault Thermal Memory	Yes	Yes	Yes	Yes	Yes
System Diagnostics					
Status LEDs	Yes	Yes	Yes	Yes	Yes
Cause of Trip LEDs	No	No	Yes	Yes	Yes
Magnitude of Trip Information	No	No	Yes	Yes	Yes
Remote Signal Contact – Ground Alarm	Yes	Yes	No	Yes	Yes
Local Auxiliary and Bell Alarm Contact	Optional	Optional	Optional	Included	Included
System Monitoring					
Digital Display	No	No	Yes②	Yes②	Yes②
Current	No	No	Yes	Yes	Yes
Power and Energy	No	No	No	No	Yes
Power Quality-Harmonics	No	No	No	No	Yes
Power Factor	No	No	No	No	Yes
Communications					
Cutler-Hammer PowerNet	No	No	No③	Yes	Yes
Testing					
Testing Method	Test Set		OPTIMizer, BIM, Cutler-Hammer PowerNet	OPTIMizer, BIM, Cutler-Hammer PowerNet	OPTIMizer, BIM, Cutler-Hammer PowerNet

① Adjust by rating plug.
② By OPTIMizer/BIM.
③ Cutler-Hammer PowerNet kit for field upgrade.

BIM = Breaker Interface Module
(A) = GF Alarm

I_s = Sensor Rating
I_n = Rating Plug
I_r = Long Delay Pickup Setting

Type ND Electronic Circuit Breakers with Non-Interchangeable Trip Units

Order as individual components: Breaker Frame, Rating Plug, Terminals

Maximum Continuous Ampere Rating @ 40°C	Digitrip RMS 310 Circuit Breaker Frame Only				Digitrip RMS 310 Rating Plug Only			Standard Terminals Only①
	Standard Interrupting Capacity 600 Volt Ac Rated 50 kAIC @ 480 Vac				Ampere Rating	Fixed Rating Plugs	Adjustable Rating Plug	See Page 85 for Optional Terminals
	Standard	Options					Adjustable Ampere Ratings Catalog Number	
	Adjustable Short Time Delay with I^2t Short Delay Ramp	Independently Adjustable Short Time Pickup and Delay	Adjustable Short Time Pickup with I^2t Short Delay and Ground Fault Protection	Independently Adjustable Short Time Pickup and Delay and Ground Fault Protection				
	Catalog Number							
2-Pole								
800	**ND2800T33W**	**ND2800T32W**	**ND2800T35W**	**ND2800T36W**	400 450 500 600 700 800	**8NES400T** **8NES450T** **8NES500T** **8NES600T** **8NES700T** **8NES800T**	Adjustable Settings are: 400, 500, 600, 800 **A8NES800T1**	**TA700NB1** **TA700NB1** **TA700NB1** **TA700NB1** **TA700NB1** **TA1000NB1**
3-Pole								
800	**ND3800T33W**	**ND3800T32W**	**ND3800T35W**	**ND3800T36W**	400 450 500 600 700 800	**8NES400T** **8NES450T** **8NES500T** **8NES600T** **8NES700T** **8NES800T**	Adjustable Settings are: 400, 500, 600, 800 **A8NES800T1**	**TA700NB1** **TA700NB1** **TA700NB1** **TA700NB1** **TA700NB1** **TA1000NB1**
4-Pole②								
800	**ND4800T33W**	**ND4800T32W**	–	–	400 450 500 600 700 800	**8NES400T** **8NES450T** **8NES500T** **8NES600T** **8NES700T** **8NES800T**	Adjustable Settings are: 400, 500, 600, 800 **A8NES800T1**	**TA700NB1** **TA700NB1** **TA700NB1** **TA700NB1** **TA700NB1** **TA1000NB1**
2-Pole								
1200	**ND212T33W**	**ND212T32W**	**ND212T35W**	**ND212T36W**	600 700 800 900 1000 1200	**12NES600T** **12NES700T** **12NES800T** **12NES900T** **12NES1000T** **12NES1200T**	Adjustable Settings are: 600, 800, 1000, 1200 **A12NES1200T1**	**TA700NB1** **TA700NB1** **TA1000NB1** **TA1000NB1** **TA1000NB1** **TA1200NB1**
3-Pole								
1200	**ND312T33W**	**ND312T32W**	**ND312T35W**	**ND312T36W**	600 700 800 900 1000 1200	**12NES600T** **12NES700T** **12NES800T** **12NES900T** **12NES1000T** **12NES1200T**	Adjustable Settings are: 600, 800, 1000, 1200 **A12NES1200T1**	**TA700NB1** **TA700NB1** **TA1000NB1** **TA1000NB1** **TA1000NB1** **TA1200NB1**
4-Pole②								
1200	**ND412T33W**	**ND412T32W**	–	–	600 700 800 900 1000 1200	**12NES600T** **12NES700T** **12NES800T** **12NES900T** **12NES1000T** **12NES1200T**	Adjustable Settings are: 600, 800, 1000, 1200 **A12NES1200T1**	**TA700NB1** **TA700NB1** **TA1000NB1** **TA1000NB1** **TA1000NB1** **TA1200NB1**

Instruction Leaflet/FRED Number 29C106

① Two terminals are required per pole.
② Neutral is in right pole.

Type HND Electronic Circuit Breakers with Non-Interchangeable Trip Units

Order as individual components: Breaker Frame, Rating Plug, Terminals

Maximum Continuous Ampere Rating @ 40°C	Digitrip RMS 310 Circuit Breaker Frame Only				Digitrip RMS 310 Rating Plug Only			Standard Terminals Only①
	High Interrupting Capacity 600 Volt Ac Rated 65 kAIC @ 480 Vac				Ampere Rating	Fixed Rating Plugs	Adjustable Rating Plug	See Page 85 for Optional Terminals
	Standard	Options					Adjustable Ampere Ratings Catalog Number	
	Adjustable Short Time Delay with I^2t Short Delay Ramp	Independently Adjustable Short Time Pickup and Delay	Adjustable Short Time Pickup with I^2t Short Delay and Ground Fault Protection	Independently Adjustable Short Time Pickup and Delay and Ground Fault Protection				
	Catalog Number							
2-Pole								
800	**HND2800T33W**	**HND2800T32W**	**HND2800T35W**	**HND2800T36W**	400 450 500 600 700 800	**8NES400T** **8NES450T** **8NES500T** **8NES600T** **8NES700T** **8NES800T**	Adjustable Settings are: 400, 500, 600, 800 **A8NES800T1**	**TA700NB1** **TA700NB1** **TA700NB1** **TA700NB1** **TA700NB1** **TA1000NB1**
3-Pole								
800	**HND3800T33W**	**HND3800T32W**	**HND3800T35W**	**HND3800T36W**	400 450 500 600 700 800	**8NES400T** **8NES450T** **8NES500T** **8NES600T** **8NES700T** **8NES800T**	Adjustable Settings are: 400, 500, 600, 800 **A8NES800T1**	**TA700NB1** **TA700NB1** **TA700NB1** **TA700NB1** **TA700NB1** **TA1000NB1**
4-Pole②								
800	**HND4800T33W**	**HND4800T32W**	–	–	400 450 500 600 700 800	**8NES400T** **8NES450T** **8NES500T** **8NES600T** **8NES700T** **8NES800T**	Adjustable Settings are: 400, 500, 600, 800 **A8NES800T1**	**TA700NB1** **TA700NB1** **TA700NB1** **TA700NB1** **TA700NB1** **TA1000NB1**
2-Pole								
1200	**HND212T33W**	**HND212T32W**	**HND212T35W**	**HND212T36W**	600 700 800 900 1000 1200	**12NES600T** **12NES700T** **12NES800T** **12NES900T** **12NES1000T** **12NES1200T**	Adjustable Settings are: 600, 800, 1000, 1200 **A12NES1200T1**	**TA700NB1** **TA700NB1** **TA1000NB1** **TA1000NB1** **TA1000NB1** **TA1200NB1**
3-Pole								
1200	**HND312T33W**	**HND312T32W**	**HND312T35W**	**HND312T36W**	600 700 800 900 1000 1200	**12NES600T** **12NES700T** **12NES800T** **12NES900T** **12NES1000T** **12NES1200T**	Adjustable Settings are: 600, 800, 1000, 1200 **A12NES1200T1**	**TA700NB1** **TA700NB1** **TA1000NB1** **TA1000NB1** **TA1000NB1** **TA1200NB1**
4-Pole②								
1200	**HND412T33W**	**HND412T32W**	–	–	600 700 800 900 1000 1200	**12NES600T** **12NES700T** **12NES800T** **12NES900T** **12NES1000T** **12NES1200T**	Adjustable Settings are: 600, 800, 1000, 1200 **A12NES1200T1**	**TA700NB1** **TA700NB1** **TA1000NB1** **TA1000NB1** **TA1000NB1** **TA1200NB1**

Instruction Leaflet/FRED Number 29C106

① Two terminals are required per pole.
② Neutral is in right pole.

Type NDC Electronic Circuit Breakers with Non-Interchangeable Trip Units

Order as individual components: Breaker Frame, Rating Plug, Terminals

Maximum Continuous Ampere Rating @ 40°C	Digitrip RMS 310 Circuit Breaker Frame Only				Digitrip RMS 310 Rating Plug Only			Standard Terminals Only①
	Ultra High Interrupting Capacity 600 Volt Ac Rated 100 kAIC @ 480 Vac				Ampere Rating	Fixed Rating Plugs	Adjustable Rating Plug	See Page 85 for Optional Terminals
	Standard	Options					Adjustable Ampere Ratings Catalog Number	
	Adjustable Short Time Delay with I^2t Short Delay Ramp	Independently Adjustable Short Time Pickup and Delay	Adjustable Short Time Pickup with I^2t Short Delay and Ground Fault Protection	Independently Adjustable Short Time Pickup and Delay and Ground Fault Protection				
	Catalog Number							
2-Pole								
800	**NDC2800T33W**	**NDC2800T32W**	**NDC2800T35W**	**NDC2800T36W**	400 450 500 600 700 800	**8NES400T** **8NES450T** **8NES500T** **8NES600T** **8NES700T** **8NES800T**	Adjustable Settings are: 400, 500, 600, 800 **A8NES800T1**	**TA700NB1** **TA700NB1** **TA700NB1** **TA700NB1** **TA700NB1** **TA1000NB1**
3-Pole								
800	**NDC3800T33W**	**NDC3800T32W**	**NDC3800T35W**	**NDC3800T36W**	400 450 500 600 700 800	**8NES400T** **8NES450T** **8NES500T** **8NES600T** **8NES700T** **8NES800T**	Adjustable Settings are: 400, 500, 600, 800 **A8NES800T1**	**TA700NB1** **TA700NB1** **TA700NB1** **TA700NB1** **TA700NB1** **TA1000NB1**
4-Pole②								
800	**NDC4800T33W**	**NDC4800T32W**	–	–	400 450 500 600 700 800	**8NES400T** **8NES450T** **8NES500T** **8NES600T** **8NES700T** **8NES800T**	Adjustable Settings are: 400, 500, 600, 800 **A8NES800T1**	**TA700NB1** **TA700NB1** **TA700NB1** **TA700NB1** **TA700NB1** **TA1000NB1**
2-Pole								
1200	**NDC212T33W**	**NDC212T32W**	**NDC212T35W**	**NDC212T36W**	600 700 800 900 1000 1200	**12NES600T** **12NES700T** **12NES800T** **12NES900T** **12NES1000T** **12NES1200T**	Adjustable Settings are: 600, 800, 1000, 1200 **A12NES1200T1**	**TA700NB1** **TA700NB1** **TA1000NB1** **TA1000NB1** **TA1000NB1** **TA1200NB1**
3-Pole								
1200	**NDC312T33W**	**NDC312T32W**	**NDC312T35W**	**NDC312T36W**	600 700 800 900 1000 1200	**12NES600T** **12NES700T** **12NES800T** **12NES900T** **12NES1000T** **12NES1200T**	Adjustable Settings are: 600, 800, 1000, 1200 **A12NES1200T1**	**TA700NB1** **TA700NB1** **TA1000NB1** **TA1000NB1** **TA1000NB1** **TA1200NB1**
4-Pole②								
1200	**NDC412T33W**	**NDC412T32W**	–	–	600 700 800 900 1000 1200	**12NES600T** **12NES700T** **12NES800T** **12NES900T** **12NES1000T** **12NES1200T**	Adjustable Settings are: 600, 800, 1000, 1200 **A12NES1200T1**	**TA700NB1** **TA700NB1** **TA1000NB1** **TA1000NB1** **TA1000NB1** **TA1200NB1**

Instruction Leaflet/FRED Number 29C106

① Two terminals are required per pole.
② Neutral is in right pole.

100% Rated Type CND Electronic Circuit Breakers with Non-Interchangeable Trip Units

The NEC allows the breaker to be rated at 100% of its frame size in an assembly, provided that 90°C wire is applied at the 75°C ampacity. Order as individual components: Breaker Frame, Rating Plug, Terminals

Maximum Continuous Ampere Rating @ 40°C	Digitrip RMS 310 Circuit Breaker Frame Only				Digitrip RMS 310 Rating Plug Only			Standard Terminals Only①
	Standard Interrupting Capacity 600 Volt Ac Rated 50 kAIC @ 480 Vac				Ampere Rating	Fixed Rating Plugs	Adjustable Rating Plug	See Page 85 for Optional Terminals
	Standard	Options					Adjustable Ampere Ratings Catalog Number	
	Adjustable Short Time Delay with I^2t Short Delay Ramp	Independently Adjustable Short Time Pickup and Delay	Adjustable Short Time Pickup with I^2t Short Delay and Ground Fault Protection	Independently Adjustable Short Time Pickup and Delay and Ground Fault Protection				
	Catalog Number							
2-Pole								
800	**CND2800T33W**	**CND2800T32W**	**CND2800T35W**	**CND2800T36W**	400 450 500 600 700 800	**8NES400T** **8NES450T** **8NES500T** **8NES600T** **8NES700T** **8NES800T**	Adjustable Settings are: 400, 500, 600, 800 **A8NES800T1**	**TA700NB1** **TA700NB1** **TA700NB1** **TA700NB1** **TA700NB1** **TA1000NB1**
3-Pole								
800	**CND3800T33W**	**CND3800T32W**	**CND3800T35W**	**CND3800T36W**	400 450 500 600 700 800	**8NES400T** **8NES450T** **8NES500T** **8NES600T** **8NES700T** **8NES800T**	Adjustable Settings are: 400, 500, 600, 800 **A8NES800T1**	**TA700NB1** **TA700NB1** **TA700NB1** **TA700NB1** **TA700NB1** **TA1000NB1**
4-Pole②								
800	**CND4800T33W**	**CND4800T32W**	–	–	400 450 500 600 700 800	**8NES400T** **8NES450T** **8NES500T** **8NES600T** **8NES700T** **8NES800T**	Adjustable Settings are: 400, 500, 600, 800 **A8NES800T1**	**TA700NB1** **TA700NB1** **TA700NB1** **TA700NB1** **TA700NB1** **TA1000NB1**
2-Pole								
1200	**CND212T33W**	**CND212T32W**	**CND212T35W**	**CND212T36W**	600 700 800 900 1000 1200	**12NES600T** **12NES700T** **12NES800T** **12NES900T** **12NES1000T** **12NES1200T**	Adjustable Settings are: 600, 800, 1000, 1200 **A12NES1200T1**	**TA700NB1** **TA700NB1** **TA1000NB1** **TA1000NB1** **TA1000NB1** **TA1200NB1**
3-Pole								
1200	**CND312T33W**	**CND312T32W**	**CND312T35W**	**CND312T36W**	600 700 800 900 1000 1200	**12NES600T** **12NES700T** **12NES800T** **12NES900T** **12NES1000T** **12NES1200T**	Adjustable Settings are: 600, 800, 1000, 1200 **A12NES1200T1**	**TA700NB1** **TA700NB1** **TA1000NB1** **TA1000NB1** **TA1000NB1** **TA1200NB1**
4-Pole②								
1200	**CND412T33W**	**CND412T32W**	–	–	600 700 800 900 1000 1200	**12NES600T** **12NES700T** **12NES800T** **12NES900T** **12NES1000T** **12NES1200T**	Adjustable Settings are: 600, 800, 1000, 1200 **A12NES1200T1**	**TA700NB1** **TA700NB1** **TA1000NB1** **TA1000NB1** **TA1000NB1** **TA1200NB1**

Instruction Leaflet/FRED Number 29C106

① Two terminals are required per pole.
② Neutral is in right pole.

100% Rated Type CHND Electronic Circuit Breakers with Non-Interchangeable Trip Units

The NEC allows the breaker to be rated at 100% of its frame size in an assembly, provided that 90°C wire is applied at the 75°C ampacity. Order as individual components: Breaker Frame, Rating Plug, Terminals

Maximum Continuous Ampere Rating @ 40°C	Digitrip RMS 310 Circuit Breaker Frame Only				Digitrip RMS 310 Rating Plug Only			Standard Terminals Only①
	High Interrupting Capacity 600 Volt Ac Rated 65 kAIC @ 480 Vac				Ampere Rating	Fixed Rating Plugs	Adjustable Rating Plug	See Page 85 for Optional Terminals
	Standard	Options					Adjustable Ampere Ratings Catalog Number	
	Adjustable Short Time Delay with I^2t Short Delay Ramp	Independently Adjustable Short Time Pickup and Delay	Adjustable Short Time Pickup with I^2t Short Delay and Ground Fault Protection	Independently Adjustable Short Time Pickup and Delay and Ground Fault Protection				
	Catalog Number							
2-Pole								
800	**CHND2800T33W**	**CHND2800T32W**	**CHND2800T35W**	**CHND2800T36W**	400 450 500 600 700 800	**8NES400T** **8NES450T** **8NES500T** **8NES600T** **8NES700T** **8NES800T**	Adjustable Settings are: 400, 500, 600, 800 **A8NES800T1**	**TA700NB1** **TA700NB1** **TA700NB1** **TA700NB1** **TA700NB1** **TA1000NB1**
3-Pole								
800	**CHND3800T33W**	**CHND3800T32W**	**CHND3800T35W**	**CHND3800T36W**	400 450 500 600 700 800	**8NES400T** **8NES450T** **8NES500T** **8NES600T** **8NES700T** **8NES800T**	Adjustable Settings are: 400, 500, 600, 800 **A8NES800T1**	**TA700NB1** **TA700NB1** **TA700NB1** **TA700NB1** **TA700NB1** **TA1000NB1**
4-Pole②								
800	**CHND4800T33W**	**CHND4800T32W**	–	–	400 450 500 600 700 800	**8NES400T** **8NES450T** **8NES500T** **8NES600T** **8NES700T** **8NES800T**	Adjustable Settings are: 400, 500, 600, 800 **A8NES800T1**	**TA700NB1** **TA700NB1** **TA700NB1** **TA700NB1** **TA700NB1** **TA1000NB1**
2-Pole								
1200	**CHND212T33W**	**CHND212T32W**	**CHND212T35W**	**CHND212T36W**	600 700 800 900 1000 1200	**12NES600T** **12NES700T** **12NES800T** **12NES900T** **12NES1000T** **12NES1200T**	Adjustable Settings are: 600, 800, 1000, 1200 **A12NES1200T1**	**TA700NB1** **TA700NB1** **TA1000NB1** **TA1000NB1** **TA1000NB1** **TA1200NB1**
3-Pole								
1200	**CHND312T33W**	**CHND312T32W**	**CHND312T35W**	**CHND312T36W**	600 700 800 900 1000 1200	**12NES600T** **12NES700T** **12NES800T** **12NES900T** **12NES1000T** **12NES1200T**	Adjustable Settings are: 600, 800, 1000, 1200 **A12NES1200T1**	**TA700NB1** **TA700NB1** **TA1000NB1** **TA1000NB1** **TA1000NB1** **TA1200NB1**
4-Pole②								
1200	**CHND412T33W**	**CHND412T32W**	–	–	600 700 800 900 1000 1200	**12NES600T** **12NES700T** **12NES800T** **12NES900T** **12NES1000T** **12NES1200T**	Adjustable Settings are: 600, 800, 1000, 1200 **A12NES1200T1**	**TA700NB1** **TA700NB1** **TA1000NB1** **TA1000NB1** **TA1000NB1** **TA1200NB1**

Instruction Leaflet/FRED Number 29C106

① Two terminals are required per pole.
② Neutral is in right pole.

100% Rated Type CNDC Electronic Circuit Breakers with Non-Interchangeable Trip Units

The NEC allows the breaker to be rated at 100% of its frame size in an assembly, provided that 90°C wire is applied at the 75°C ampacity. Order as individual components: Breaker Frame, Rating Plug, Terminals

Maximum Continuous Ampere Rating @ 40°C	Digitrip RMS 310 Circuit Breaker Frame Only				Digitrip RMS 310 Rating Plug Only			Standard Terminals Only①
	Ultra High Interrupting Capacity 600 Volt Ac Rated 100 kAIC @ 480 Vac				Ampere Rating	Fixed Rating Plugs	Adjustable Rating Plug	See Page 85 for Optional Terminals
	Standard	Options					Adjustable Ampere Ratings Catalog Number	
	Adjustable Short Time Delay with I^2t Short Delay Ramp	Independently Adjustable Short Time Pickup and Delay	Adjustable Short Time Pickup with I^2t Short Delay and Ground Fault Protection	Independently Adjustable Short Time Pickup and Delay and Ground Fault Protection				
	Catalog Number							
2-Pole								
800	**CNDC2800T33W**	**CNDC2800T32W**	**CNDC2800T35W**	**CNDC2800T36W**	400 450 500 600 700 800	**8NES400T** **8NES450T** **8NES500T** **8NES600T** **8NES700T** **8NES800T**	Adjustable Settings are: 400, 500, 600, 800 **A8NES800T1**	**TA700NB1** **TA700NB1** **TA700NB1** **TA700NB1** **TA700NB1** **TA1000NB1**
3-Pole								
800	**CNDC3800T33W**	**CNDC3800T32W**	**CNDC3800T35W**	**CNDC3800T36W**	400 450 500 600 700 800	**8NES400T** **8NES450T** **8NES500T** **8NES600T** **8NES700T** **8NES800T**	Adjustable Settings are: 400, 500, 600, 800 **A8NES800T1**	**TA700NB1** **TA700NB1** **TA700NB1** **TA700NB1** **TA700NB1** **TA1000NB1**
4-Pole②								
800	**CNDC4800T33W**	**CNDC4800T32W**	–	–	400 450 500 600 700 800	**8NES400T** **8NES450T** **8NES500T** **8NES600T** **8NES700T** **8NES800T**	Adjustable Settings are: 400, 500, 600, 800 **A8NES800T1**	**TA700NB1** **TA700NB1** **TA700NB1** **TA700NB1** **TA700NB1** **TA1000NB1**
2-Pole								
1200	**CNDC212T33W**	**CNDC212T32W**	**CNDC212T35W**	**CNDC212T36W**	600 700 800 900 1000 1200	**12NES600T** **12NES700T** **12NES800T** **12NES900T** **12NES1000T** **12NES1200T**	Adjustable Settings are: 600, 800, 1000, 1200 **A12NES1200T1**	**TA700NB1** **TA700NB1** **TA1000NB1** **TA1000NB1** **TA1000NB1** **TA1200NB1**
3-Pole								
1200	**CNDC312T33W**	**CNDC312T32W**	**CNDC312T35W**	**CNDC312T36W**	600 700 800 900 1000 1200	**12NES600T** **12NES700T** **12NES800T** **12NES900T** **12NES1000T** **12NES1200T**	Adjustable Settings are: 600, 800, 1000, 1200 **A12NES1200T1**	**TA700NB1** **TA700NB1** **TA1000NB1** **TA1000NB1** **TA1000NB1** **TA1200NB1**
4-Pole②								
1200	**CNDC412T33W**	**CNDC412T32W**	–	–	600 700 800 900 1000 1200	**12NES600T** **12NES700T** **12NES800T** **12NES900T** **12NES1000T** **12NES1200T**	Adjustable Settings are: 600, 800, 1000, 1200 **A12NES1200T1**	**TA700NB1** **TA700NB1** **TA1000NB1** **TA1000NB1** **TA1000NB1** **TA1200NB1**

Instruction Leaflet/FRED Number 29C106

① Two terminals are required per pole.
② Neutral is in right pole.

Digitrip OPTIM① Electronic Circuit Breakers with Interchangeable Rating Plugs

Order as individual components: Breaker Frame (which includes Trip Unit), Rating Plug, Terminals.

Maximum Continuous Ampere Rating @ 40°C	Circuit Breaker Frame Only							Digitrip OPTIM Rating Plug Only	
	L – Adjustable Long Delay Pickup (I_r) with Adjustable Long Delay Time (I^2t or I^4t Response)② S – Adjustable Short Delay Pickup with Adjustable Short Delay Time (I^2t or Flat Response) I – Adjustable Instantaneous Pickup G – Adjustable Ground Fault Pickup with Adjustable Ground Fault Time Delay (I^2t or Flat Response) A – Adjustable Ground Fault Alarm with Adjustable Ground Fault Time Delay (I^2t or Flat Response)							Ampere Rating	Fixed Rating Plug
	OPTIM 550	OPTIM 550	OPTIM 550	OPTIM 750	OPTIM 750	OPTIM 1050	OPTIM 1050		
	LSI	LSIG	LSIA	LSIG	LSIA	LSIG	LSIA		
	Catalog Number								
3-Pole Standard Interrupting Capacity 600 Volt Ac Rated 50 kAIC @ 480 Vac									
800	ND3800T52W	ND3800T56W	ND3800T57W	ND3800T76W	ND3800T77W	ND3800T106W	ND3800T107W	400 450 500 550 600 700 800	ORPN80A400 ORPN80A450 ORPN80A500 ORPN80A550 ORPN80A600 ORPN80A700 ORPN80A800
1200	ND312T52W	ND312T56W	ND312T57W	ND312T76W	ND312T77W	ND312T106W	ND312T107W	600 700 800 1000 1200	ORPN80A600 ORPN80A700 ORPN80A800 ORPN80A100 ORPN80A120
3-Pole High Interrupting Capacity 600 Volt Ac Rated 65 kAIC @ 480 Vac									
800	HND3800T52W	HND3800T56W	HND3800T57W	HND3800T76W	HND3800T77W	HND3800T106W	HND3800T107W	400 450 500 550 600 700 800	ORPN80A400 ORPN80A450 ORPN80A500 ORPN80A550 ORPN80A600 ORPN80A700 ORPN80A800
1200	HND312T52W	HND312T56W	HND312T57W	HND312T76W	HND312T77W	HND312T106W	HND312T107W	600 700 800 1000 1200	ORPN80A600 ORPN80A700 ORPN80A800 ORPN80A100 ORPN80A120
3-Pole Ultra High Interrupting Capacity 600 Volt Ac Rated 100 kAIC @ 480 Vac									
800	NDC3800T52W	NDC3800T56W	NDC3800T57W	NDC3800T76W	NDC3800T77W	NDC3800T106W	NDC3800T107W	400 450 500 550 600 700 800	ORPN80A400 ORPN80A450 ORPN80A500 ORPN80A550 ORPN80A600 ORPN80A700 ORPN80A800
1200	NDC312T52W	NDC312T56W	NDC312T57W	NDC312T76W	NDC312T77W	NDC312T106W	NDC312T107W	600 700 800 1000 1200	ORPN80A600 ORPN80A700 ORPN80A800 ORPN80A100 ORPN80A120

Instruction Leaflet/FRED Number 29C106 for Breaker; 29C891 for OPTIM Trip

① 1 Form C auxiliary switch and 1 Form C bell (trip) alarm switch supplied with breaker as standard on models 750 and 1050.

② Long delay I^4t response selection limits short delay time to flat response.

100% Rated Digitrip OPTIM① Circuit Breakers with Interchangeable Rating Plugs

Order as individual components: Breaker Frame (which includes Trip Unit), Rating Plug, Terminals.

Maximum Continuous Ampere Rating @ 40°C	Circuit Breaker Frame Only							Digitrip OPTIM Rating Plug Only	
	L – Adjustable Long Delay Pickup (I_r) with Adjustable Long Delay Time (I^2t or I^4t Response)② S – Adjustable Short Delay Pickup with Adjustable Short Delay Time (I^2t or Flat Response) I – Adjustable Instantaneous Pickup G – Adjustable Ground Fault Pickup with Adjustable Ground Fault Time Delay (I^2t or Flat Response) A – Adjustable Ground Fault Alarm with Adjustable Ground Fault Time Delay (I^2t or Flat Response)							Ampere Rating	Fixed Rating Plug
	OPTIM 550	OPTIM 550	OPTIM 550	OPTIM 750	OPTIM 750	OPTIM 1050	OPTIM 1050		
	LSI	LSIG	LSIA	LSIG	LSIA	LSIG	LSIA		
	Catalog Number								
3-Pole Standard Interrupting Capacity 600 Volt Ac Rated 50 kAIC @ 480 Vac									
800	CND3800T52W	CND3800T56W	CND3800T57W	CND3800T76W	CND3800T77W	CND3800T106W	CND3800T107W	400 450 500 550 600 700 800	ORPN80A400 ORPN80A450 ORPN80A500 ORPN80A550 ORPN80A600 ORPN80A700 ORPN80A800
1200	CND312T52W	CND312T56W	CND312T57W	CND312T76W	CND312T77W	CND312T106W	CND312T107W	600 700 800 1000 1200	ORPN80A600 ORPN80A700 ORPN80A800 ORPN80A100 ORPN80A120
3-Pole High Interrupting Capacity 600 Volt Ac Rated 65 kAIC @ 480 Vac									
800	CHND3800T52W	CHND3800T56W	CHND3800T57W	CHND3800T76W	CHND3800T77W	CHND3800T106W	CHND3800T107W	400 450 500 550 600 700 800	ORPN80A400 ORPN80A450 ORPN80A500 ORPN80A550 ORPN80A600 ORPN80A700 ORPN80A800
1200	CHND312T52W	CHND312T56W	CHND312T57W	CHND312T76W	CHND312T77W	CHND312T106W	CNHD312T107W	600 700 800 1000 1200	ORPN80A600 ORPN80A700 ORPN80A800 ORPN80A100 ORPN80A120
3-Pole Ultra High Interrupting Capacity 600 Volt Ac Rated 100 kAIC @ 480 Vac									
800	CNDC3800T52W	CNDC3800T56W	CNDC3800T57W	CNDC3800T76W	CNDC3800T77W	CNDC3800T106W	CNDC3800T107W	400 450 500 550 600 700 800	ORPN80A400 ORPN80A450 ORPN80A500 ORPN80A550 ORPN80A600 ORPN80A700 ORPN80A800
1200	CNDC312T52W	CNDC312T56W	CNDC312T57W	CNDC312T76W	CNDC312T77W	CNDC312T106W	CNDC312T107W	600 700 800 1000 1200	ORPN80A600 ORPN80A700 ORPN80A800 ORPN80A100 ORPN80A120

Instruction Leaflet/FRED Number 29C106 for Breaker; 29C891 for OPTIM Trip

① 1 Form C auxiliary switch and 1 Form C bell (trip) alarm switch supplied with breaker as standard on models 750 and 1050.

② Long delay I^4t response selection limits short delay time to flat response.

Type ND Molded Case Switches

Continuous Ampere Rating @ 40°C	Catalog Number		
	2-Pole	3-Pole	4-Pole①
	Complete with Standard Line and Load Terminals (shipped separately)		
	Type ND – HIgh Instantaneous (K)		
800	–	ND3800WK	ND4800WK
	Type ND – HIgh Instantaneous (K)		
1200	–	ND312WK	ND412WK

Note: Molded case switch may trip above 14,000 amperes.

For UL listed, series tested molded case switch application data, refer to Cutler-Hammer.

Instruction Leaflet/FRED Number 29C106

Line and Load Terminals

Ordering Information

N-frame circuit breakers use Cu/Al terminals as standard. When optional copper or Cu/Al terminals are required, order by catalog number. Specify if factory installation is required.

Line and Load Terminals

Maximum Breaker Amperes	Terminal Body Material	Wire Type	AWG Wire Range/No. Conductors	Metric Wire Range mm^2	Catalog Number
Standard Cu/Al Pressure Terminals					
700	Aluminum	Cu/Al	(2) 1-500 kcmil	50-300	**TA700NB1**
1000	Aluminum	Cu/Al	(3) 3/0-400 kcmil	95-185	**TA1000NB1②**
1200	Aluminum	Cu/Al	(4) 4/0-500 kcmil	120-300	**TA1200NB1②**
1200	Aluminum	Cu/Al	(3) 500-750 kcmil	300-400	**TA1201NB1③**
Optional Copper and Cu/Al Pressure Type Terminals					
700	Copper	Cu	(2) 2/0-500 kcmil	70-300	**T700NB1**
1000	Copper	Cu	(3) 3/0-500 kcmil	95-300	**T1000NB1**
1200	Copper	Cu	(4) 3/0-400 kcmil	95-185	**T1200NB3**

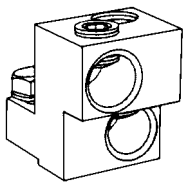
TA700NB1

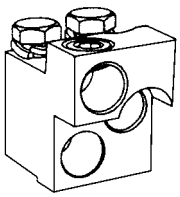
TA1000NB1

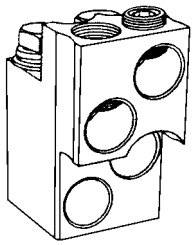
TA1200NB1

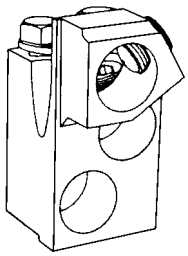
TA1201NB1

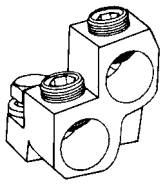
T700NB1

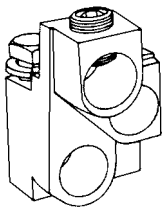
T1000NB1

① Neutral is in right pole.
② Terminal rating is A19 Cu.
③ Terminal rating is A17 Cu.

Catalog Numbering System

This information is presented only as an aid to understanding catalog numbers. It is not to be used to build catalog numbers for circuit breakers or trip units.

Circuit Breaker/Frame Catalog Number

ND 3 12 T3 2 W

Circuit Breaker/ Frame Type	Number of Poles	Circuit Breaker/ Frame Ampere Rating	Trip Model	Trip Type	Suffix
ND HND NDC CND CHND CNDC	2: 2 Poles 3: 3 Poles 4: 4 Poles	8: 800 Amperes 12: 1200 Amperes	T3 – Model 310 T5 – Model 550 T7 – Model 750 T10 – Model 1050	2 – LSI 3 – LS 5 – LSG 6 – LSIG 7 – LSIA	E: 100% R.P. protected (4-Pole) EH: 50% R.P. protected (4-Pole) K: High Magnetic Molded Case Switch W: Without Terminals X: Load Only Terminals Y: Line Only Terminals

Dimensions/Weights

Dimensions, Inches (mm)

Number of Poles	Width	Height	Depth
2, 3	8.25 (210)	16 (407)	5.5 (140)
4	11.125 (283)	16 (407)	5.5 (140)

Approximate Shipping Weight, Lbs. (kg)

Breaker Type	Complete Breaker		
	Number of Poles		
	2	3	4
ND, HND, NDC	37 (16.783)	45 (20.412)	58 (26.308)

Allowable Accessory Combinations

Different combinations of accessories can be supplied, depending on the types of accessories and the number of poles in the circuit breaker.

	Reference Page		3-Pole				4-Pole			
			Left	Center	Right		Left	Center	Right	Neu.
Internal Accessories (Only One Internal Accessory Per Pole)①										
Alarm Lockout (Make/Break)	141		■		■		■		■	
Alarm Lockout (2Make/2Break)	141		■		■		■		■	
Auxiliary Switch (1A, 1B)	144		■		■		■		■	
Auxiliary Switch (2A, 2B)	144		■		■		■		■	
Auxiliary Switch (3A, 3B)	144		■		■		■		■	
Auxiliary Switch (1A 1B) and Alarm Switch Combination	146		■		■		■		■	
Auxiliary Switch (2A 2B) and Alarm Switch Combination	146		■		■		■		■	
Shunt Trip – Standard	150		■				■			
Shunt Trip – Low Energy	152		■				■			
Undervoltage Release Mechanism	158		■				■			
Cutler-Hammer PowerNet Communications Kit (OPTIM 550)	160				■					
External Accessories										
Base Mounting Hardware	163			●				●		
Interphase Barriers	166			●				●		
Non-Padlockable Handle Block	168			■				■		
Padlockable Handle Lock Hasp	169		❑		❑		❑		❑	
Key Interlock Kit	170		❑		❑		❑		❑	
Sliding Bar Interlock – Requires Two Breakers	171			●						
Walking Beam Interlock – Requires Two Breakers	171			●				●		
Electrical (Motor) Operator	173			●				●		
Plug-in Adapters	174			●				●		
Rear Connecting Studs	176			●				●		
Panelboard Connecting Straps	177			●				●		
Handle Mechanisms	178			●				●		
Handle Extension	182			●				●		
Solid-State (Electronic) Portable Test Kit	184			●				●		
OPTIM System Components 3-Poles										
Ground Fault Alarm Unit	184									
Potential Transformer Module	184									
Breaker Interface Module (BIM)	185									
Digitrip OPTIMizer	185									
Auxiliary Power Module	185									
Cutler-Hammer PowerNet Software	185									
Modifications (Refer to Cutler-Hammer)										
Special Calibration	186			●				●		
Moisture Fungus Treatment	186			●				●		
Freeze-Tested Circuit Breakers	186			●				●		
Marine Application	186			●				●		

■ Applicable in indicated pole position

❑ May be mounted on left or right pole – not both

● Accessory available/Modification available

① OPTIM 750 and 1050 are factory sealed and do not have the right pole available for accessories.

Typical Series C R-Frame Circuit Breaker

- R-frame circuit breakers are available as frame (which includes trip unit), rating plug and terminals.
- All R-frame circuit breakers are suitable for reverse feed use.

Interrupting Capacity Ratings

UL489/CSA Interrupting Capacity Ratings ①

Circuit Breaker Type	Number of Poles	Interrupting Capacity (Symmetrical Amperes) (kA) Volts Ac (50/60 Hz)				Circuit Breaker Type	Page Numbers Trip Unit Types②					
		240	277	480	600		310	510	610	810	910	OPTIM
RD	3, 4	125	–	65	50	RD	91	94	96	98	100	102
CRD ③	3, 4	125	–	65	50	CRD	93	95	97	99	101	103
RDC	3, 4	200	–	100	65	RDC	92	94	96	98	100	102
CRDC ③	3, 4	200	–	100	65	CRDC	93	95	97	99	101	103

IEC 947-2 Interrupting Capacity Ratings ①

Circuit Breaker Type	Number of Poles	Interrupting Capacity (Symmetrical Amperes) (kA) Volts Ac (50/60 Hz)			Circuit Breaker Type	Page Numbers Trip Unit Types②					
		240	415	690		310	510	610	810	910	OPTIM
RD I_{CU} I_{CS}	3, 4	 135 100	 70 50	 25 13	RD	91	94	96	98	100	102
RDC I_{CU} I_{CS}	3, 4	 200 100	 100 50	 35 18	RDC	92	94	96	98	100	102

① Utilization Category A circuit breakers.
② See page 90 for Trip Unit Selection Guide
③ 100% Rated breakers.

R-Frame Digitrip Selection Guide

Trip Unit Type	Digitrip RMS 310		Digitrip RMS 510	Digitrip RMS 610	Digitrip OPTIM 750	Digitrip RMS 810	Digitrip RMS 910	Digitrip OPTIM 1050
RMS Sensing	Yes		Yes	Yes	Yes	Yes	Yes	Yes
Breaker Type								
Frame	R		R	R	R	R	R	R
Ampere Range	800A-2500A		800A-2500A	800A-2500A	800A-2500A	800A-2500A	800A-2500A	800A-2500A
Interrupting Rating @ 480V	65, 100 (kA)		65, 100 (kA)	65, 100 (kA)	65, 100 (kA)	65, 100 (kA)	65, 100 (kA)	65, 100 (kA)
Protection								
Ordering Options	LS, LSG	LSI, LSIG	LI, LS, LSI, LIG, LSG, LSIG	LI, LS, LSI, LIG LSG, LSIG	LSI(A), LSIG	LI, LS, LSI, LIG, LSG, LSIG	LI, LS, LSI, LIG, LSG, LSIG	LSI(A), LISG
Fixed Rated Plug (I_n)	Yes	Yes	Yes	Yes	Yes	Yes	Yes	Yes
Overtemperature Trip	Yes	Yes	Yes	Yes	Yes	Yes	Yes	Yes
Long Delay Protection (L)								
Adjustable Rating Plug (I_n)	Yes	Yes	No	No	No	No	No	No
Long Delay Pickup	0.5-1.0 (I_n)①	0.5-1.0 (I_n)①	0.5-1.0 x (I_n)	0.5-1.0 x (I_n)	0.4-1.0 x (I_n)	0.5-1.0 x (I_n)	0.5-1.0 x (I_n)	0.4-1.0 x (I_n)
Long Delay Time I^2T	12 Seconds	12 Seconds	2-24 Seconds	2-24 Seconds	2-24 Seconds	2-24 Seconds	2-24 Seconds	2-24 Seconds
Long Delay Time I^4T	No	No	No	No	1-5 Seconds	No	No	1-5 Seconds
Long Delay Thermal Memory	Yes	Yes	Yes	Yes	Yes	Yes	Yes	Yes
High Load Alarm	No	No	No	0.85 x I_r	0.5-1.0 x I_r	0.85 x I_r	0.85 x I_r	0.5-1.0 x I_r
Short Delay Protection (S)								
Short Delay Pickup	200-800% x (I_n)②	200-800% x (I_n)②	200-600% S1&S2 x (I_r)	200-600% S1&S2 x (I_r)	150-800% x (I_r)②③	200-600% S1&S2 x (I_r)	200-600% S1&S2 x (I_r)	150-800% x (I_r)②③
Short Delay Time I^2T	100 ms	No	100-500 ms	100-500 ms	100-500 ms	100-500 ms	100-500 ms	100-500 ms
Short Delay Time Flat	No	Inst-300 ms	100-500 ms	100-500 ms	100-500 ms	100-500 ms	100-500 ms	100-500 ms
Short Delay Time Zone Selective Interlocking	No	No	Yes	Yes	Yes	Yes	Yes	Yes
Instantaneous Protection (I)								
Instantaneous Pick Up	No	200-800% x (I_n)	200-600% M1&M2 x (I_n)	200-600% M1&M2 x (I_n)	200-800% x (I_n)③	200-600% M1&M2 x (I_n)	200-600% M1&M2 x (I_n)	200-800% x (I_n)③
Discriminator	No	No	Yes④	Yes④	Yes	Yes④	Yes④	Yes
Instantaneous Override	Yes	Yes	Yes	Yes	Yes	Yes	Yes	Yes
Ground Fault Protection (G)								
Ground Fault Alarm⑤	No	No	No	No	25-100% x (I_n)	No	No	25-100% x (I_n)
Ground Fault Pick Up⑤	Varies by Frame	Varies by Frame	25-100% x (I_s)	25-100% x (I_s)	25-100% x (I_n)	25-100% x (I_s)	25-100% x (I_s)	25-100% x (I_n)
Ground Fault Delay I^2T	No	No	100-500 ms	100-500 ms	100-500 ms	100-500 ms	100-500 ms	100-500 ms
Ground Fault Delay Flat	Inst-500 ms	Inst-500 ms	100-500 ms	100-500 ms	100-500 ms	100-500 ms	100-500 ms	100-500 ms
Ground Fault Zone Selective Interlocking	No	No	Yes	Yes	Yes	Yes	Yes	Yes
Ground Fault Thermal Memory	Yes	Yes	Yes	Yes	Yes	Yes	Yes	Yes
System Diagnostics								
Status LEDs	Yes	Yes	Yes	Yes	Yes	Yes	Yes	Yes
Cause of Trip LEDs	No	No	Yes	Yes	Yes	Yes	Yes	Yes
Magnitude of Trip Information	No	No	No	Yes	Yes	Yes	Yes	Yes
Remote Signal Contacts	Yes	Yes	No	Yes	Yes	Yes	Yes	Yes
System Monitoring								
Digital Display	No	No	No	Yes	Yes⑥	Yes	Yes	Yes⑥
Current	No	No	No	Yes	Yes	Yes	Yes	Yes
Voltage	No	No	No	No	No	No	Yes	No
Power and Energy	No	No	No	No	No	Yes	Yes	Yes
Power Quality-Harmonics	No	No	No	No	No	No	Yes	Yes
Power Factor	No	No	No	No	No	Yes (Over Cutler-Hammer Power-Net Only)	Yes	Yes
Communications								
Cutler-Hammer PowerNet	No	No	No	No	Yes	Yes	Yes	Yes
Testing								
Testing Method	Test Set		Integral	Integral	OPTIMizer, BIM, Cutler-Hammer PowerNet	Integral	Integral	OPTIMizer, BIM, Cutler-Hammer PowerNet

① Adjust by rating plug.
② Except 2500 ampere frame is 200-600%.
③ Varies by frame.
④ LS/LSG only.
⑤ Not to exceed 1200 amperes.
⑥ By OPTIMizer/BIM.
BIM = Breaker Interface Module
(A) = GF Alarm

I_s = Sensor Rating
I_n = Rating Plug
I_r = Long Delay Pickup Setting x I_n

Digitrip RMS 310 Electronic Circuit Breakers with Interchangeable Rating Plugs

Order as individual components: Breaker Frame (which includes Trip Unit) and Rating Plug.

Maximum Continuous Ampere Rating @ 40°C	Circuit Breaker Frame Only				Digitrip RMS 310 Rating Plug Only		
	L – Adjustable Long Delay Pickup (By Adjustable Rating Plug) S – Adjustable Short Delay Pickup with Fixed Short Delay Time (I^2t Response) or Adjustable Short Delay Time (Flat Response) I – Adjustable Instantaneous Pickup by Setting Short Delay Time to Instantaneous G – Adjustable Ground Fault Pickup with Adjustable Ground Fault Time (Flat Response)				Ampere Rating	Fixed Rating Plug	Adjustable Rating Plug Adjustable Ampere Ratings Catalog Number
	LS	LSI	LSG③	LSIG③			
	Catalog Number						
3-Pole Standard Interrupting Capacity 600 Volt Ac Rated 65 kAIC @ 480 Vac							
1600①	**RD316T33W**	**RD316T32W**	**RD316T35W**	**RD316T36W**	800 1000 1200 1250 1400 1500 1600	**16RES08T** **16RES10T** **16RES12T** **16RES125T** **16RES14T** **16RES15T** **16RES16T**	Adjustable Settings are: 800, 1000, 1200, 1600 **A16RES16T1**
2000	**RD320T33W**	**RD320T32W**	**RD320T35W**	**RD320T36W**	1000 1200 1250 1400 1600 2000	**20RES10T** **20RES12T** **20RES125T** **20RES14T** **20RES16T** **20RES20T**	Adjustable Settings are: 1000, 1200, 1600, 2000 **A20RES20T1**
2500	**RD325T33W**	**RD325T32W**	**RD325T35W**	**RD325T36W**	1200 1250 1600 2000 2500	**25RES12T** **25RES125T** **25RES16T** **25RES20T** **25RES25T**	Adjustable Settings are: 1200, 1600, 2000, 2500 **A25RES25T1**
4-Pole② Standard Interrupting Capacity 600 Volt Ac Rated 65 kAIC @ 480 Vac							
1600①	**RD416T33W**	**RD416T32W**	–	–	800 1000 1200 1250 1400 1500 1600	**16RES08T** **16RES10T** **16RES12T** **16RES125T** **16RES14T** **16RES15T** **16RES16T**	Adjustable Settings are: 800, 1000, 1200, 1600 **A16RES16T1**
2000	**RD420T33W**	**RD420T32W**	–	–	1000 1200 1250 1400 1600 2000	**20RES10T** **20RES12T** **20RES125T** **20RES14T** **20RES16T** **20RES20T**	Adjustable Settings are: 1000, 1200, 1600, 2000 **A20RES20T1**
2500	**RD425T33W**	**RD425T32W**	–	–	1200 1250 1600 2000 2500	**25RES12T** **25RES125T** **25RES16T** **25RES20T** **25RES25T**	Adjustable Settings are: 1200, 1600, 2000, 2500 **A25RES25T1**

Instruction Leaflet/FRED Number 29C107 for Breaker; Number 29C883 for Digitrip 310 Trip Unit

① For SCR application use 2000 ampere frame.
② Unprotected right pole neutral. Add "P" to catalog number for 100% protected right pole neutral, i.e., "RD416T33PW".
③ Add suffix "R" to breaker catalog number for ground fault remote indication compatibility.

Digitrip RMS 310 Electronic Circuit Breakers with Interchangeable Rating Plugs

Order as individual components: Breaker Frame (which includes Trip Unit) and Rating Plug.

Maximum Continuous Ampere Rating @ 40°C	Circuit Breaker Frame Only				Digitrip RMS 310 Rating Plug Only		
	L – Adjustable Long Delay Pickup (By Adjustable Rating Plug) S – Adjustable Short Delay Pickup with Fixed Short Delay Time (I^2t Response) or Adjustable Short Delay Time (Flat Response) I – Adjustable Instantaneous Pickup by Setting Short Delay Time to Instantaneous G – Adjustable Ground Fault Pickup with Adjustable Ground Fault Time (Flat Response)				Ampere Rating	Fixed Rating Plug	Adjustable Rating Plug Adjustable Ampere Ratings Catalog Number
	LS	LSI	LSG③	LSIG③			
	Catalog Number						
3-Pole High Interrupting Capacity 600 Volt Ac Rated 100 kAIC @ 480 Vac							
1600①	**RDC316T33W**	**RDC316T32W**	**RDC316T35W**	**RDC316T36W**	800 1000 1200 1250 1400 1500 1600	**16RES08T** **16RES10T** **16RES12T** **16RES125T** **16RES14T** **16RES15T** **16RES16T**	Adjustable Settings are: 800, 1000, 1200, 1600 **A16RES16T1**
2000	**RDC320T33W**	**RDC320T32W**	**RDC320T35W**	**RDC320T36W**	1000 1200 1250 1400 1600 2000	**20RES10T** **20RES12T** **20RES125T** **20RES14T** **20RES16T** **20RES20T**	Adjustable Settings are: 1000, 1200, 1600, 2000 **A20RES20T1**
2500	**RDC325T33W**	**RDC325T32W**	**RDC325T35W**	**RDC325T36W**	1200 1250 1600 2000 2500	**25RES12T** **25RES125T** **25RES16T** **25RES20T** **25RES25T**	Adjustable Settings are: 1200, 1600, 2000, 2500 **A25RES25T1**
4-Pole② High Interrupting Capacity 600 Volt Ac Rated 100 kAIC @ 480 Vac							
1600①	**RDC416T33W**	**RDC416T32W**	–	–	800 1000 1200 1250 1400 1500 1600	**16RES08T** **16RES10T** **16RES12T** **16RES125T** **16RES14T** **16RES15T** **16RES16T**	Adjustable Settings are: 800, 1000, 1200, 1600 **A16RES16T1**
2000	**RDC420T33W**	**RDC420T32W**	–	–	1000 1200 1250 1400 1600 2000	**20RES10T** **20RES12T** **20RES125T** **20RES14T** **20RES16T** **20RES20T**	Adjustable Settings are: 1000, 1200, 1600, 2000 **A20RES20T1**
2500	**RDC425T33W**	**RDC425T32W**	–	–	1200 1250 1600 2000 2500	**25RES12T** **25RES125T** **25RES16T** **25RES20T** **25RES25T**	Adjustable Settings are: 1200, 1600, 2000, 2500 **A25RES25T1**

Instruction Leaflet/FRED Number 29C107 for Breaker; Number 29C883 for Digitrip 310 Trip Unit

① For SCR application use 2000 ampere frame.
② Unprotected right pole neutral. Add "P" to catalog number for 100% protected right pole neutral, i.e., "RDC416T33PW".
③ Add suffix "R" to breaker catalog number for ground fault remote indication compatibility.

100% Rated Digitrip RMS 310 Electronic Circuit Breakers①

The NEC allows the breaker to be rated at 100% of its frame size in an assembly, provided that 90°C wire is applied at 75°C ampacity. Order as individual components: Breaker Frame (which includes Trip Unit) and Rating Plug.

Maximum Continuous Ampere Rating @ 40°C	Circuit Breaker Frame Only				Digitrip RMS 310 Rating Plug Only		
	L – Adjustable Long Delay Pickup (By Adjustable Rating Plug) S – Adjustable Short Delay Pickup with Fixed Short Delay Time (I^2t Response) or Adjustable Short Delay Time (Flat Response) I – Adjustable Instantaneous Pickup by Setting Short Delay Time to Instantaneous G – Adjustable Ground Fault Pickup with Adjustable Ground Fault Time (Flat Response)				Ampere Rating	Fixed Rating Plug	Adjustable Rating Plug Adjustable Ampere Ratings Catalog Number
	LS	LSI	LSG③	LSIG③			
	Catalog Number						
3-Pole Standard Interrupting Capacity 600 Volt Ac Rated 65 kAIC @ 480 Vac							
1600②	**CRD316T33W**	**CRD316T32W**	**CRD316T35W**	**CRD316T36W**	800 1000 1200 1250 1400 1500 1600	**16RES08T** **16RES10T** **16RES12T** **16RES125T** **16RES14T** **16RES15T** **16RES16T**	Adjustable Settings are: 800, 1000, 1200, 1600 **A16RES16T1**
2000	**CRD320T33W**	**CRD320T32W**	**CRD320T35W**	**CRD320T36W**	1000 1200 1250 1400 1600 2000	**20RES10T** **20RES12T** **20RES125T** **20RES14T** **20RES16T** **20RES20T**	Adjustable Settings are: 1000, 1200, 1600, 2000 **A20RES20T1**
3-Pole High Interrupting Capacity 600 Volt Ac Rated 100 kAIC @ 480 Vac							
1600①②	**CRDC316T33W**	**CRDC316T32W**	**CRDC316T35W**	**CRDC316T36W**	800 1000 1200 1250 1400 1500 1600	**16RES08T** **16RES10T** **16RES12T** **16RES125T** **16RES14T** **16RES15T** **16RES16T**	Adjustable Settings are: 800, 1000, 1200, 1600 **A16RES16T1**
2000	**CRDC320T33W**	**CRDC320T32W**	**CRDC320T35W**	**CRDC320T36W**	1000 1200 1250 1400 1600 2000	**20RES10T** **20RES12T** **20RES125T** **20RES14T** **20RES16T** **20RES20T**	Adjustable Settings are: 1000, 1200, 1600, 2000 **A20RES20T1**

Instruction Leaflet/FRED Number 29C107 for Breaker; Number 29C883 for Digitrip 310 Trip Unit

① Includes B2016RDL rear connections. Refer to TD.29.02.T.E for dimensions.
② For SCR application use 2000 ampere frame.
③ Add suffix "R" to breaker catalog number for ground fault remote indication compatibility.

Digitrip RMS 510 Electronic Circuit Breakers with Interchangeable Rating Plugs

Order as individual components: Breaker Frame (which includes Trip Unit) and Rating Plug.

Maximum Continuous Ampere Rating @ 40°C	Circuit Breaker Frame Only						Digitrip Rating Plug Only	
	L – Adjustable Long Delay Pickup (I_r) with Adjustable Long Delay Time S – Adjustable Short Delay Pickup with Adjustable Short Delay Time (I^2t or Flat Response) I – Adjustable Instantaneous Pickup G – Adjustable Ground Fault Pickup with Adjustable Ground Fault Time Delay (I^2t or Flat Response)						Fixed Rating Plug	
	LI	LS	LSI	LIG	LSG	LSIG	Rated Current (I_n)	Catalog Number
	Catalog Number							
3-Pole Standard Interrupting Capacity 600 Volt Ac Rated 65 kAIC @ 480 Vac								
1600	RD316T51W	RD316T53W	RD316T52W	RD316T54W	RD316T55W	RD316T56W	800 1000 1200 1600	RP6R16A080 RP6R16A100 RP6R16A120 RP6R16A160
2000	RD320T51W	RD320T53W	RD320T52W	RD320T54W	RD320T55W	RD320T56W	1000 1200 1600 2000	RP6R20A100 RP6R20A120 RP6R20A160 RP6R20A200
2500	RD325T51W	RD325T53W	RD325T52W	RD325T54W	RD325T55W	RD325T56W	1600 2000 2500	RP6R25A160 RP6R25A200 RP6R25A250
3-Pole High Interrupting Capacity 600 Volt Ac Rated 100 kAIC @ 480 Vac								
1600	RDC316T51W	RDC316T53W	RDC316T52W	RDC316T54W	RDC316T55W	RDC316T56W	800 1000 1200 1600	RP6R16A080 RP6R16A100 RP6R16A120 RP6R16A160
2000	RDC320T51W	RDC320T53W	RDC320T52W	RDC320T54W	RDC320T55W	RDC320T56W	1000 1200 1600 2000	RP6R20A100 RP6R20A120 RP6R20A160 RP6R20A200
2500	RDC325T51W	RDC325T53W	RDC325T52W	RDC325T54W	RDC325T55W	RDC325T56W	1600 2000 2500	RP6R25A160 RP6R25A200 RP6R25A250

Instruction Leaflet/FRED Number 29C107 for Breaker; Number 29C885 for Digitrip 510 Trip Unit

100% Rated Digitrip RMS 510 Circuit Breakers

The NEC allows the breaker to be rated at 100% of its frame size in an assembly, provided that 90°C wire is applied at 75°C ampacity. Order as individual components: Breaker Frame (which includes Trip Unit) and Rating Plug.

Maximum Continuous Ampere Rating @ 40°C	Circuit Breaker Frame Only						Digitrip Rating Plug Only	
	L – Adjustable Long Delay Pickup (I_r) with Adjustable Long Delay Time S – Adjustable Short Delay Pickup with Adjustable Short Delay Time (I^2t or Flat Response) I – Adjustable Instantaneous Pickup G – Adjustable Ground Fault Pickup with Adjustable Ground Fault Time Delay (I^2t or Flat Response)						Fixed Rating Plug	
	LI	LS	LSI	LIG	LSG	LSIG	Rated Current (I_n)	Catalog Number
	Catalog Number							
3-Pole Standard Interrupting Capacity 600 Volt Ac Rated 65 kAIC @ 480 Vac								
1600	CRD316T51W	CRD316T53W	CRD316T52W	CRD316T54W	CRD316T55W	CRD316T56W	800 1000 1200 1600	RP6R16A080 RP6R16A100 RP6R16A120 RP6R16A160
2000	CRD320T51W	CRD320T53W	CRD320T52W	CRD320T54W	CRD320T55W	CRD320T56W	1000 1200 1600 2000	RP6R20A100 RP6R20A120 RP6R20A160 RP6R20A200
3-Pole High Interrupting Capacity 600 Volt Ac Rated 100 kAIC @ 480 Vac								
1600	CRDC316T51W	CRDC316T53W	CRDC316T52W	CRDC316T54W	CRDC316T55W	CRDC316T56W	800 1000 1200 1600	RP6R16A080 RP6R16A100 RP6R16A120 RP6R16A160
2000	CRDC320T51W	CRDC320T53W	CRDC320T52W	CRDC320T54W	CRDC320T55W	CRDC320T56W	1000 1200 1600 2000	RP6R20A100 RP6R20A120 RP6R20A160 RP6R20A200

Instruction Leaflet/FRED Number 29C107 for Breaker; Number 29885 for Digitrip 510 Trip Unit

Digitrip RMS 610 Electronic Circuit Breakers with Interchangeable Rating Plugs

Order as individual components: Breaker Frame (which includes Trip Unit) and Rating Plug.

Maximum Continuous Ampere Rating @ 40°C	Circuit Breaker Frame Only						Digitrip Rating Plug Only	
	L – Adjustable Long Delay Pickup (I_r) with Adjustable Long Delay Time S – Adjustable Short Delay Pickup with Adjustable Short Delay Time (I^2t or Flat Response) I – Adjustable Instantaneous Pickup G – Adjustable Ground Fault Pickup with Adjustable Ground Fault Time Delay (I^2t or Flat Response)						Fixed Rating Plug	
							Rated Current (I_n)	Catalog Number
	LI	LS	LSI	LIG	LSG	LSIG		
	Catalog Number							
3-Pole Standard Interrupting Capacity 600 Volt Ac Rated 65 kAIC @ 480 Vac								
1600	RD316T61W	RD316T63W	RD316T62W	RD316T64W	RD316T65W	RD316T66W	800 1000 1200 1600	RP6R16A080 RP6R16A100 RP6R16A120 RP6R16A160
2000	RD320T61W	RD320T63W	RD320T62W	RD320T64W	RD320T65W	RD320T66W	1000 1200 1600 2000	RP6R20A100 RP6R20A120 RP6R20A160 RP6R20A200
2500	RD325T61W	RD325T63W	RD325T62W	RD325T64W	RD325T65W	RD325T66W	1600 2000 2500	RP6R25A160 RP6R25A200 RP6R25A250
3-Pole High Interrupting Capacity 600 Volt Ac Rated 100 kAIC @ 480 Vac								
1600	RDC316T61W	RDC316T63W	RDC316T62W	RDC316T64W	RDC316T65W	RDC316T66W	800 1000 1200 1600	RP6R16A080 RP6R16A100 RP6R16A120 RP6R16A160
2000	RDC320T61W	RDC320T63W	RDC320T62W	RDC320T64W	RDC320T65W	RDC320T66W	1000 1200 1600 2000	RP6R20A100 RP6R20A120 RP6R20A160 RP6R20A200
2500	RDC325T61W	RDC325T63W	RDC325T62W	RDC325T64W	RDC325T65W	RDC325T66W	1600 2000 2500	RP6R25A160 RP6R25A200 RP6R25A250

Instruction Leaflet/FRED Number 29C107 for Breaker; Number 29886 for Digitrip 610 Trip Unit

100% Rated Digitrip RMS 610 Circuit Breakers

The NEC allows the breaker to be rated at 100% of its frame size in an assembly, provided that 90°C wire is applied at 75°C ampacity. Order as individual components: Breaker Frame (which includes Trip Unit) and Rating Plug.

Maximum Continuous Ampere Rating @ 40°C	Circuit Breaker Frame Only						Digitrip Rating Plug Only	
	L – Adjustable Long Delay Pickup (I_r) with Adjustable Long Delay Time S – Adjustable Short Delay Pickup with Adjustable Short Delay Time (I^2t or Flat Response) I – Adjustable Instantaneous Pickup G – Adjustable Ground Fault Pickup with Adjustable Ground Fault Time Delay (I^2t or Flat Response)						Fixed Rating Plug	
	LI	LS	LSI	LIG	LSG	LSIG	Rated Current (I_n)	Catalog Number
	Catalog Number							
3-Pole Standard Interrupting Capacity 600 Volt Ac Rated 65 kAIC @ 480 Vac								
1600	CRD316T61W	CRD316T63W	CRD316T62W	CRD316T64W	CRD316T65W	CRD316T66W	800 1000 1200 1600	RP6R16A080 RP6R16A100 RP6R16A120 RP6R16A160
2000	CRD320T61W	CRD320T63W	CRD320T62W	CRD320T64W	CRD320T65W	CRD320T66W	1000 1200 1600 2000	RP6R20A100 RP6R20A120 RP6R20A160 RP6R20A200
3-Pole High Interrupting Capacity 600 Volt Ac Rated 100 kAIC @ 480 Vac								
1600	CRDC316T61W	CRDC316T63W	CRDC316T62W	CRDC316T64W	CRDC316T65W	CRDC316T66W	800 1000 1200 1600	RP6R16A080 RP6R16A100 RP6R16A120 RP6R16A160
2000	CRDC320T61W	CRDC320T63W	CRDC320T62W	CRDC320T64W	CRDC320T65W	CRDC320T66W	1000 1200 1600 2000	RP6R20A100 RP6R20A120 RP6R20A160 RP6R20A200

Instruction Leaflet/FRED Number 29C107 for Breaker; Number 29886 for Digitrip 610 Trip Unit

Digitrip RMS 810 Electronic Circuit Breakers with Interchangeable Rating Plugs

Order as individual components: Breaker Frame (which includes Trip Unit) and Rating Plug.

Maximum Continuous Ampere Rating @ 40°C	Circuit Breaker Frame Only						Digitrip Rating Plug Only	
	L – Adjustable Long Delay Pickup (I_r) with Adjustable Long Delay Time S – Adjustable Short Delay Pickup with Adjustable Short Delay Time (I^2t or Flat Response) I – Adjustable Instantaneous Pickup G – Adjustable Ground Fault Pickup with Adjustable Ground Fault Time Delay (I^2t or Flat Response)						Fixed Rating Plug	
							Rated Current (I_n)	Catalog Number
	LI	LS	LSI	LIG	LSG	LSIG		
	Catalog Number							
3-Pole Standard Interrupting Capacity 600 Volt Ac Rated 65 kAIC @ 480 Vac								
1600	RD316T81W	RD316T83W	RD316T82W	RD316T84W	RD316T85W	RD316T86W	800 1000 1200 1600	RP6R16A080 RP6R16A100 RP6R16A120 RP6R16A160
2000	RD320T81W	RD320T83W	RD320T82W	RD320T84W	RD320T85W	RD320T86W	1000 1200 1600 2000	RP6R20A100 RP6R20A120 RP6R20A160 RP6R20A200
2500	RD325T81W	RD325T83W	RD325T82W	RD325T84W	RD325T85W	RD325T86W	1600 2000 2500	RP6R25A160 RP6R25A200 RP6R25A250
3-Pole High Interrupting Capacity 600 Volt Ac Rated 100 kAIC @ 480 Vac								
1600	RDC316T81W	RDC316T83W	RDC316T82W	RDC316T84W	RDC316T85W	RDC316T86W	800 1000 1200 1600	RP6R16A080 RP6R16A100 RP6R16A120 RP6R16A160
2000	RDC320T81W	RDC320T83W	RDC320T82W	RDC320T84W	RDC320T85W	RDC320T86W	1000 1200 1600 2000	RP6R20A100 RP6R20A120 RP6R20A160 RP6R20A200
2500	RDC325T81W	RDC325T83W	RDC325T82W	RDC325T84W	RDC325T85W	RDC325T86W	1600 2000 2500	RP6R25A160 RP6R25A200 RP6R25A250

Instruction Leaflet/FRED Number 29C107 for Breaker; Number 29888 for Digitrip 810 Trip Unit

100% Rated Digitrip RMS 810 Circuit Breakers

The NEC allows the breaker to be rated at 100% of its frame size in an assembly, provided that 90°C wire is applied at 75°C ampacity. Order as individual components: Breaker Frame (which includes Trip Unit) and Rating Plug.

Maximum Continuous Ampere Rating @ 40°C	Circuit Breaker Frame Only						Digitrip Rating Plug Only	
	L – Adjustable Long Delay Pickup (I_r) with Adjustable Long Delay Time S – Adjustable Short Delay Pickup with Adjustable Short Delay Time (I^2t or Flat Response) I – Adjustable Instantaneous Pickup G – Adjustable Ground Fault Pickup with Adjustable Ground Fault Time Delay (I^2t or Flat Response)						Fixed Rating Plug	
	LI	LS	LSI	LIG	LSG	LSIG	Rated Current (I_n)	Catalog Number
	Catalog Number							
3-Pole Standard Interrupting Capacity 600 Volt Ac Rated 65 kAIC @ 480 Vac								
1600	CRD316T81W	CRD316T83W	CRD316T82W	CRD316T84W	CRD316T85W	CRD316T86W	800 1000 1200 1600	RP6R16A080 RP6R16A100 RP6R16A120 RP6R16A160
2000	CRD320T81W	CRD320T83W	CRD320T82W	CRD320T84W	CRD320T85W	CRD320T86W	1000 1200 1600 2000	RP6R20A100 RP6R20A120 RP6R20A160 RP6R20A200
3-Pole High Interrupting Capacity 600 Volt Ac Rated 100 kAIC @ 480 Vac								
1600	CRDC316T81W	CRDC316T83W	CRDC316T82W	CRDC316T84W	CRDC316T85W	CRDC316T86W	800 1000 1200 1600	RP6R16A080 RP6R16A100 RP6R16A120 RP6R16A160
2000	CRDC320T81W	CRDC320T83W	CRDC320T82W	CRDC320T84W	CRDC320T85W	CRDC320T86W	1000 1200 1600 2000	RP6R20A100 RP6R20A120 RP6R20A160 RP6R20A200

Instruction Leaflet/FRED Number 29C107 for Breaker; Number 29888 for Digitrip 810 Trip Unit

Digitrip RMS 910 Electronic Circuit Breakers with Interchangeable Rating Plugs

Order as individual components: Breaker Frame (which includes Trip Unit) and Rating Plug.

Maximum Continuous Ampere Rating @ 40°C	Circuit Breaker Frame Only						Digitrip Rating Plug Only	
	L – Adjustable Long Delay Pickup (I_r) with Adjustable Long Delay Time S – Adjustable Short Delay Pickup with Adjustable Short Delay Time (I^2t or Flat Response) I – Adjustable Instantaneous Pickup G – Adjustable Ground Fault Pickup with Adjustable Ground Fault Time Delay (I^2t or Flat Response)						Fixed Rating Plug	
							Rated Current (I_n)	Catalog Number
	LI	LS	LSI	LIG	LSG	LSIG		
	Catalog Number							
3-Pole Standard Interrupting Capacity 600 Volt Ac Rated 65 kAIC @ 480 Vac								
1600	RD316T91W	RD316T93W	RD316T92W	RD316T94W	RD316T95W	RD316T96W	800 1000 1200 1600	RP6R16A080 RP6R16A100 RP6R16A120 RP6R16A160
2000	RD320T91W	RD320T93W	RD320T92W	RD320T94W	RD320T95W	RD320T96W	1000 1200 1600 2000	RP6R20A100 RP6R20A120 RP6R20A160 RP6R20A200
2500	RD325T91W	RD325T93W	RD325T92W	RD325T94W	RD325T95W	RD325T96W	1600 2000 2500	RP6R25A160 RP6R25A200 RP6R25A250
3-Pole High Interrupting Capacity 600 Volt Ac Rated 100 kAIC @ 480 Vac								
1600	RDC316T91W	RDC316T93W	RDC316T92W	RDC316T94W	RDC316T95W	RDC316T96W	800 1000 1200 1600	RP6R16A080 RP6R16A100 RP6R16A120 RP6R16A160
2000	RDC320T91W	RDC320T93W	RDC320T92W	RDC320T94W	RDC320T95W	RDC320T96W	1000 1200 1600 2000	RP6R20A100 RP6R20A120 RP6R20A160 RP6R20A200
2500	RDC325T91W	RDC325T93W	RDC325T92W	RDC325T94W	RDC325T95W	RDC325T96W	1600 2000 2500	RP6R25A160 RP6R25A200 RP6R25A250

Instruction Leaflet/FRED Number 29C107 for Breaker; Number 29889 for Digitrip 910 Trip Unit

100% Rated Digitrip RMS 910 Circuit Breakers

The NEC allows the breaker to be rated at 100% of its frame size in an assembly, provided that 90°C wire is applied at 75°C ampacity. Order as individual components: Breaker Frame (which includes Trip Unit) and Rating Plug.

Maximum Continuous Ampere Rating @ 40°C	Circuit Breaker Frame Only						Digitrip Rating Plug Only	
	L – Adjustable Long Delay Pickup (I_r) with Adjustable Long Delay Time S – Adjustable Short Delay Pickup with Adjustable Short Delay Time (I^2t or Flat Response) I – Adjustable Instantaneous Pickup G – Adjustable Ground Fault Pickup with Adjustable Ground Fault Time Delay (I^2t or Flat Response)						Fixed Rating Plug	
	LI	LS	LSI	LIG	LSG	LSIG	Rated Current (I_n)	Catalog Number
	Catalog Number							
3-Pole Standard Interrupting Capacity 600 Volt Ac Rated 65 kAIC @ 480 Vac								
1600	**CRD316T91W**	**CRD316T93W**	**CRD316T92W**	**CRD316T94W**	**CRD316T95W**	**CRD316T96W**	800 1000 1200 1600	**RP6R16A080** **RP6R16A100** **RP6R16A120** **RP6R16A160**
2000	**CRD320T91W**	**CRD320T93W**	**CRD320T92W**	**CRD320T94W**	**CRD320T95W**	**CRD320T96W**	1000 1200 1600 2000	**RP6R20A100** **RP6R20A120** **RP6R20A160** **RP6R20A200**
3-Pole High Interrupting Capacity 600 Volt Ac Rated 100 kAIC @ 480 Vac								
1600	**CRDC316T91W**	**CRDC316T93W**	**CRDC316T92W**	**CRDC316T94W**	**CRDC316T95W**	**CRDC316T96W**	800 1000 1200 1600	**RP6R16A080** **RP6R16A100** **RP6R16A120** **RP6R16A160**
2000	**CRDC320T91W**	**CRDC320T93W**	**CRDC320T92W**	**CRDC320T94W**	**CRDC320T95W**	**CRDC320T96W**	1000 1200 1600 2000	**RP6R20A100** **RP6R20A120** **RP6R20A160** **RP6R20A200**

Instruction Leaflet/FRED Number 29C107 for Breaker; Number 29889 for Digitrip 910 Trip Unit

Digitrip OPTIM Electronic Circuit Breakers with Interchangeable Rating Plugs

Order as individual components: Breaker Frame (which includes Trip Unit) and Rating Plug.

Maximum Continuous Ampere Rating @ 40°C	Circuit Breaker Frame Only				Digitrip OPTIM Rating Plug Only	
	L – Adjustable Long Delay Pickup (I_r) with Adjustable Long Delay Time S – Adjustable Short Delay Pickup with Adjustable Short Delay Time (I^2t or Flat Response) I – Adjustable Instantaneous Pickup G – Adjustable Ground Fault Pickup with Adjustable Ground Fault Time Delay (I^2t or Flat Response) A – Adjustable Ground Fault Alarm with Adjustable Ground Fault Time Delay (I^2t or Flat Response)				Fixed Rating Plug	
	LSIA 750	LSIG 750	LSIA 1050	LSIG 1050	Ampere Rating	Catalog Number
	Catalog Number					
3-Pole Standard Interrupting Capacity 600 Volt Ac Rated 65 kAIC @ 480 Vac						
1600	RD316T77W	RD316T76W	RD316T107W	RD316T106W	800 1000 1200 1600	0RPR16A080 0RPR16A100 0RPR16A120 0RPR16A160
2000	RD320T77W	RD320T76W	RD320T107W	RD320T106W	1000 1200 1600 2000	0RPR20A100 0RPR20A120 0RPR20A160 0RPR20A200
2500	RD325T77W	RD325T76W	RD325T107W	RD325T106W	1600 2000 2500	0RPR25A160 0RPR25A200 0RPR25A250
3-Pole High Interrupting Capacity 600 Volt Ac Rated 100 kAIC @ 480 Vac						
1600	RDC316T77W	RDC316T76W	RDC316T107W	RDC316T106W	800 1000 1200 1600	0RPR16A080 0RPR16A100 0RPR16A120 0RPR16A160
2000	RDC320T77W	RDC320T76W	RDC320T107W	RDC320T106W	1000 1200 1600 2000	0RPR20A100 0RPR20A120 0RPR20A160 0RPR20A200
2500	RDC325T77W	RDC325T76W	RDC325T107W	RDC325T106W	1600 2000 2500	0RPR25A160 0RPR25A200 0RPR25A250

Instruction Leaflet/FRED Number 29C107 for Breaker; Number 29C891 for OPTIM Trip Unit

100% Rated 600 Volt AC Digitrip OPTIM Circuit Breakers with Interchangeable Rating Plugs

Order as individual components: Breaker Frame (which includes Trip Unit) and Rating Plug.

Maximum Continuous Ampere Rating @ 40°C	Circuit Breaker Frame Only				Digitrip OPTIM Rating Plug Only	
	L – Adjustable Long Delay Pickup (I_r) with Adjustable Long Delay Time S – Adjustable Short Delay Pickup with Adjustable Short Delay Time (I^2t or Flat Response) I – Adjustable Instantaneous Pickup G – Adjustable Ground Fault Pickup with Adjustable Ground Fault Time Delay (I^2t or Flat Response) A – Adjustable Ground Fault Alarm with Adjustable Ground Fault Time Delay (I^2t or Flat Response)				Fixed Rating Plug	
	LSIA 750	LSIG 750	LSIA 1050	LSIG 1050	Ampere Rating	Catalog Number
3-Pole Standard Interrupting Capacity 600 Volt Ac Rated 65 kAIC @ 480 Vac						
1600	CRD316T77W	CRD316T76W	CRD316T107W	CRD316T106W	800 1000 1200 1600	0RPR16A080 0RPR16A100 0RPR16A120 0RPR16A160
2000	CRD320T77W	CRD320T76W	CRD320T107W	CRD320T106W	1000 1200 1600 2000	0RPR20A100 0RPR20A120 0RPR20A160 0RPR20A200
3-Pole High Interrupting Capacity 600 Volt Ac Rated 100 kAIC @ 480 Vac						
1600	CRDC316T77W	CRDC316T76W	CRDC316T107W	CRDC316T106W	800 1000 1200 1600	0RPR16A080 0RPR16A100 0RPR16A120 0RPR16A160
2000	CRDC320T77W	CRDC320T76W	CRDC320T107W	CRDC320T106W	1000 1200 1600 2000	0RPR20A100 0RPR20A120 0RPR20A160 0RPR20A200

Instruction Leaflet/FRED Number 29C107 for Breaker; Number 29C891 for OPTIM Trip Unit

Molded Case Switches

For UL listed, series tested molded case switch application data, refer to Cutler-Hammer.

Continuous Ampere Rating @ 40°C	Complete without Terminals	
	3-Pole	4-Pole
	Catalog Number	
1600	Type RD – HIgh Instantaneous (K)	
	RD316WK	RD416WK
2000	Type RD – HIgh Instantaneous (K)	
	RD320WK	RD420WK
2500	Type RD – HIgh Instantaneous (K)	
	–	–

Note: Molded case switch may trip above 17500 amperes.

Instruction Leaflet/FRED Number 29C106 for Molded Case Switch

Line and Load Terminals

Line and load terminals provide wire connecting capabilities for specific ranges of continuous current ratings and wire types. All terminals comply with Underwriters Laboratories, Inc. Standards UL486A and UL486B and CSA C22.2 No. 65M. Unless otherwise specified, R-frame circuit breaker line load terminals are shipped separately for field installation.

Ordering Information

R-frame circuit breakers have Cu/Al terminals as standard and Cu only terminals as an option. Specify if factory installation is required.

Line and Load Terminals

Maximum Breaker Amperes	Terminal Body Material	Wire Type	Hardware	AWG/kcmil Wire Range/No. Conductors	Metric Wire Range mm^2	Catalog Number
Wire Terminals						
1600	Aluminum	Cu/Al	English	500-1000 (4)	300-500	**TA1600RD**
1600	Copper	Cu	English	1-600 (4)	50-300	**T1600RD**
2000	Aluminum	Cu/Al	English	2-600 (6)	35-300	**TA2000RD**①
Rear Connectors						
2000	Copper	–	English	–	–	**B2016RD**
2000	Copper	–	English	–	–	**B2016RDL**②
2500	Copper	–	English	–	–	**B2500RD**③

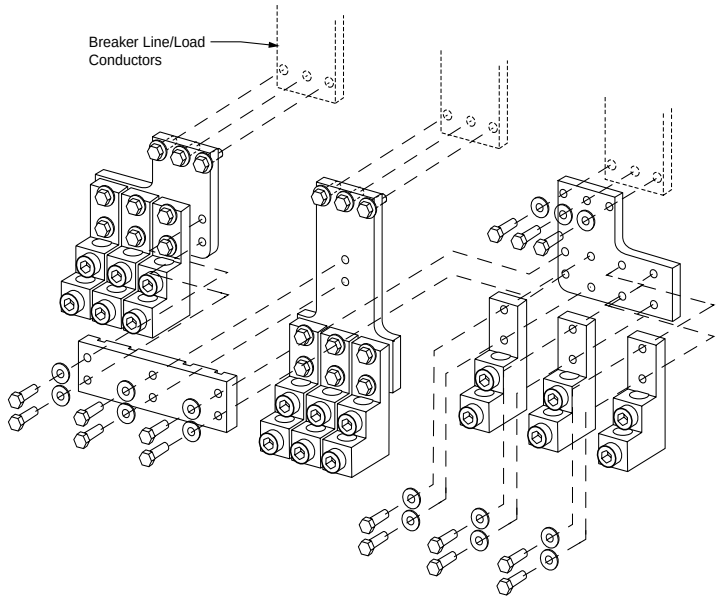

TA2000RD

① Catalog number includes bus connection, terminals, and hardware for either line side or load side of 3-pole breaker.

② For use with 100% rated 1600A and 2000A frame. Do not order separately unless for replacement purposes. Is included in breaker carton when 100% rated device is ordered.

③ For use with 2500-amp frame. Do not order separately unless for replacement purposes. Included in breaker carton when 2500A breaker is ordered.

Catalog Numbering System

This information is presented only as an aid to understanding catalog numbers. It is not to be used to build catalog numbers for circuit breakers or trip units.

Circuit Breaker/Frame Catalog Number

RD 3 16 T32 W

Circuit Breaker/ Frame Type	Number of Poles	Circuit Breaker/ Frame Ampere Rating	Trip Type①	Suffix
RD RDC CRD CRDC	3: 3 Poles 4: 4 Poles	16: 1600A 20: 2000A 25: 2500A	T32: Digitrip RMS 310 LSI T53: Digitrip RMS 510 LS T65: Digitrip RMS 610 LSG T86: Digitrip RMS 810 LSIG T96: Digitrip RMS 910 LSIG T77: Digitrip OPTIM 750 LSIA T106: Digitrip OPTIM 1050 LSIG	W: Without Terminals P: 100% Protected Neutral Pole R: Ground Fault Remote (310 Only) K: Molded Case Switch

Dimensions/Weights

Dimensions, Inches (mm)

Number of Poles	Width	Height	Depth
3	15.5 (394)	16 (406)	9.75 (248)
4	20 (508)	16 (406)	9.75 (248)

Approximate Shipping Weight, Lbs. (kg)

Breaker Type	Complete Breaker	
	Number of Poles	
	3	4
1600A		
RD, CRD, RDC, CRDC	102 (46.266)	135 (61.235)
2000A		
RD, RDC	102 (46.266)	135 (61.235)
CRD, CRDC	130 (58.967)	175 (79.378)
2500A		
RD, RDC	135 (61.235)	182 (82.553)

① For complete list of available trip types refer to pages 91 through 103.

Allowable Accessory Combinations

Different combinations of accessories can be supplied, depending on the types of accessories and the number of poles in the circuit breaker.

	Reference Page	3-Pole			4-Pole			
		Left	Center	Right	Left	Center	Right	Neu.
Internal Accessories								
Alarm Lockout (Make/Break)	141			■			■	
Alarm Lockout (2Make/2Break)	141			■			■	
Auxiliary Switch (2A, 2B)	144			■			■	
Auxiliary Switch (4A, 4B)	144			■			■	
Shunt Trip – Standard	151			■			■	
Shunt Trip – Low Energy	152			■			■	
Undervoltage Release Mechanism	159			■			■	
Accessory Terminal Block②	160			■				■
External Accessories								
Base Mounting Hardware	163							
Padlockable Handle Lock Hasp	169		●			●		
Key Interlock Kit	170		■			■		
Walking Beam Interlock	171							
Electrical (Motor) Operator	173		■			■		
Drawout Cassette	164		●					
Handle Mechanisms	178		■			■		
Handle Extension①	182		■			■		
Solid-State (Electronic) Portable Test Kit (310 Only)	184		●			●		
OPTIM System Components								
Breaker Interface Module (BIM)	185		●					
Digitrip OPTIMizer	185		●					
Auxiliary Power Module	185		●					
Cutler-Hammer PowerNet Software	185		●					
Modifications (Refer to Cutler-Hammer)								
Special Calibration	186		●				●	
Moisture Fungus Treatment	186		●				●	
Freeze-Tested Circuit Breakers	186		●				●	
Marine Application	186		●				●	

■ Applicable in indicated pole position ● Accessory available/Modification available

① Included with breaker.
② Mounts outside breaker.

Series C Motor Circuit Protectors

General Information

Designated as the Cutler-Hammer Types GMCP, HMCP, the Series C instantaneous-only motor circuit protector (MCP) is available in ratings from 3A to 600A for motor starter sizes 0 through 6. The MCP is designed to comply with the applicable requirements of Underwriters Laboratories, Inc. Standard UL489, Canadian Standards Association Standard C22.2 No. 5, and International Electrotechnical Commission Recommendations IEC 157-1.

An innovative design of internal components allows higher MCP-starter combination interrupting ratings. The MCP is marked to permit proper electrical application within the assigned equipment ratings.

The MCP is a recognized component (UL File E7819) and complies with the applicable requirements of Underwriters Laboratories, Inc. Standard UL489. It is also designed to comply with the applicable requirements of Canadian Standards Association Standard C22.2 No. 5, International Electrotechnical Commission Recommendations IEC 157-1, and nameplates bear the CE marking.

Catalog Numbering System

This information is presented only as an aid to understanding catalog numbers. It is not to be used to build catalog numbers for circuit breakers or trip units.

Motor Circuit Protector Catalog Number

HMCP 003 A0 C

Motor Circuit Protective Type	Continuous Ampere Rating	Magnetic Trip Range/NEMA Starter Size	Suffix
HMCP: 3 Poles	003	A0: 9-30/0	C: Non-Aluminum Terminals
HM2P: 2 Poles①	007	C0: 21-70/0	W: W/O Terminals
HMCPS: 3 Poles	015	E0: 45-150/0	X: Load Terminals Only
	025	D0: 40-60/0	Y: Line Terminals Only
	030	H1: 90-300/1	S: Stainless Steel Terminals (150A Frame Only)
	050	G2: 80-120/2	No Suffix: Standard Terminals on Line and Load
		K2: 150-500/2	
	070	J2: 115-170/2	
		M2: 210-700/2	
	100	L3: 160-240/3	
		R3: 300-1000/3	
	150	T4: 450-1500/4	
		U4: 750-2500/4	
	250	A5: 350-700/5	
		C5: 450-900/5	
	400	D5: 500-1000/5	
		F5: 625-1250/5	
		G5: 750-1500/5	
		J5: 875-1750/5	
		K5: 1000-2000/5	
		L5: 1125-2250/5	
		W5: 1250-2500/5	
		N5: 1500-3000/5	
		R5: 1750-3500/5	
		X5: 2000-4000/5	
	600	L6: 1800-6000/6 Electronic)	

① On J- and K-Frame HMCPs only.

GMCP 003 A0 C

Motor Circuit Protective Device	Continuous Ampere Rating	Magnetic Trip Range/NEMA Starter Size	Suffix
GMCP: 3 Poles	003	A0: 15-30/0	C: Non-Aluminum Terminals
	007	C0: 35-70/0	
	015	E0: 75-150/0	
	030	H1: 150-300/1	
	050	K2: 250-500/2	
	060	J2: 300-600/2	
	063	M2: 320-630/2	

G-Frame

480 Vac Maximum, 250 Vdc Maximum

MCP Catalog Number	NEMA Starter Size	Continuous Amperes	Cam Setting	Motor Full Load Center Amperes⑤	MCP Trip Setting
GMCP003A0C	0	3	A	1.1 - 1.2	15
			B	1.3 - 1.5	18
			C	1.6 - 1.7	21
			D	1.8 - 1.9	24
			E	2.0 - 2.2	27
			F	2.3 - 2.5	30
GMCP007C0C	0	7	A	2.6 - 3.1	35
			B	3.2 - 3.6	42
			C	3.7 - 3.9	49
			D	4.3 - 4.7	56
			E	4.8 - 5.2	63
			F	5.3 - 5.7	70
GMCP015E0C	0	15	A	5.7 - 6.8	75
			B	6.9 - 7.9	90
			C	8.0 - 9.1	105
			D	9.2 - 10.3	120
			E	10.4 - 11.4	135
			F	11.5 - 12.6	150
GMCP030H1C	1	30	A	11.5 - 13.7	150
			B	13.8 - 16.0	180
			C	16.1 - 18.3	210
			D	18.4 - 20.6	240
			E	20.7 - 22.9	270
			F	23.0 - 25.2	300
GMCP050K2C	2	50	A	19.3 - 22.9	250
			B	23.0 - 26.8	300
			C	26.9 - 30.6	350
			D	30.7 - 34.5	400
			E	34.6 - 38.3	450
			F	38.4 - 42.1	500
GMCP060J2C	3	60	A	23.1 - 27.5	300
			B	27.7 - 32.2	360
			C	32.3 - 36.7	420
			D	36.9 - 41.4	480
			E	41.5 - 46.0	540
			F	46.2 - 50.5	600
GMCP063M2C	3	63	A	24.2 - 32.1	320
			B	29.1 - 34.8	380
			C	33.9 - 39.4	440
			D	38.8 - 46.4	500
			E	43.6 - 48.9	570
			F	48.5 - 53.7	630

Instruction Leaflet/FRED Number 15579

Modifications for GMCP

Internal Accessories

These modifications must be factory installed①.

Type Accessory	Electrical Ratings			Contact Arrangement	Style Number	Factory Suffix
	Volts	Frequency	Amperes			
Shunt Trip③	120	50/60 Hz	1.1		1373D62G18	S5
Shunt Trip③	240	50/60 Hz	2.1		1373D62G19	S6
Auxiliary Switch④	240	50/60 Hz	6.0	1a/1b	1288C74G03	A3
Auxiliary Switch④	240	50/60 Hz	6.0	2a/2b	1288C73G03	A6
Alarm Switch④	240	50/60 Hz	6.0	Make/Break	1288C75G03	B3
Alarm Switch④ Alarm Switch Combination	240	50/60 Hz	6.0	1a/1b Make/Break	1288C76G09	B13

Note: No UVR available on GMCP.

Instruction Leaflet/FRED Number 15552 for Alarm Switch
Instruction Leaflet/FRED Number 15551 for Auxiliary Switch
Instruction Leaflet/FRED Number 15550 for Shunt Trip

External Mounted Accessories

Description	Number Units in Package	Style Number
Lock Dog (Non-Padlockable)	1	1294C01H01
Mounting Hardware	1	624B375G23
DIN Rail Adapter②	10	1225C79G02

Instruction Leaflet/FRED Number 29C191 (DIN Rail Adapter)

Vari-Depth Handle Mechanism⑥

Description	Catalog Number
For Type 1 use	HRGMV11L
For Type 3R, 4X, 12 use	HRGMV14L
Close Coupled Black with Gray Handle	HRGMC10
Close Coupled Red with Yellow Handle	HRGMC30

① Only one accessory may be installed in GMCP.
② For use with standard 35 mm DIN rail such as, 35 x 7.5 or 15 mm per DIN EN50022.
③ LH only.
④ RH only.
⑤ Motor FLA ranges are typical. The corresponding trip setting is at 13 times the minimum FLA value shown. Where a 13 times setting is required for an intermediate FLA value, alternate cam settings and/or MCP ratings should be used.
⑥ For use with GMCP only.

F-Frame

600 Vac Maximum, 250 Vdc Maximum

MCP Catalog Number	NEMA Starter Size	Continuous Amperes	Cam Setting	Motor Full Load Center Amperes①	MCP Trip Setting②
HMCP003A0C	0	3	A	.69 - .91	9
			B	.92 - 1.0	12
			C	1.1 - 1.2	15
			D	1.3 - 1.5	18
			E	1.6 - 1.7	21
			F	1.8 - 1.9	24
			G	2.0 - 2.2	27
			H	2.3 - 2.5	30
HMCP007C0C	0	7	A	1.5 - 2.0	21
			B	2.1 - 2.5	28
			C	2.6 - 3.1	35
			D	3.2 - 3.6	42
			E	3.7 - 3.9	49
			F	4.3 - 4.7	56
			G	4.8 - 5.2	63
			H	5.3 - 5.7	70
HMCP015E0C	0	15	A	3.4 - 4.5	45
			B	4.6 - 5.6	60
			C	5.7 - 6.8	75
			D	6.9 - 7.9	90
			E	8.0 - 9.1	105
			F	9.2 - 10.3	120
			G	10.4 - 11.4	135
			H	11.5 - 12.6	150
HMCP030H1C	1	30	A	6.9 - 9.1	90
			B	9.2 - 11.4	120
			C	11.5 - 13.7	150
			D	13.8 - 16.0	180
			E	16.1 - 18.3	210
			F	18.4 - 20.6	240
			G	20.7 - 22.9	270
			H	23.0 - 25.2	300
HMCP050K2C	2	50	A	11.5 - 15.2	150
			B	15.3 - 19.1	200
			C	19.2 - 22.9	250
			D	23.0 - 26.8	300
			E	26.9 - 30.6	350
			F	30.7 - 34.5	400
			G	34.6 - 38.3	450
			H	38.4 - 42.1	500
HMCP070M2C	2	70	A	16.1 - 21.4	210
			B	21.5 - 26.8	280
			C	26.9 - 32.2	350
			D	32.3 - 37.5	420
			E	37.6 - 42.9	490
			F	43.0 - 48.3	560
			G	48.4 - 53.7	630
			H	53.8 - 59.1	700
HMCP100R3C	3	100	A	23.0 - 30.6	300
			B	30.7 - 38.3	400
			C	38.4 - 46.0	500
			D	46.1 - 53.7	600
			E	53.8 - 61.4	700
			F	61.5 - 69.1	800
			G	69.2 - 76.8	900
			H	76.9 - 84.5	1000

① Motor FLA ranges are typical. The corresponding trip setting is at 13 times the minimum FLA value shown. Where a 13 times setting is required for an intermediate FLA value, alternate cam settings and/or MCP ratings should be used.

② For Dc applications, actual trip levels are approximately 40% higher than values shown.

③ Settings above 130 amperes are for special applications. NEC Article 430-110(a) requires the ampere rating of the disconnecting means to be not less than 115% of the motor full load ampere rating.

F-Frame *(Continued)*

600 Vac Maximum, 250 Vdc Maximum

MCP Catalog Number	NEMA Starter Size	Continuous Amperes	Cam Setting	Motor Full Load Center Amperes①	MCP Trip Setting②
HMCP150T4C	4	150	A	34.6 - 46.0	450
			B	46.1 - 57.5	600
			C	57.6 - 69.1	750
			D	69.2 - 80.6	900
			E	80.7 - 92.2	1050
			F	92.3 -103.7	1200
			G	103.8 -115.2	1350
			H	115.3 -126.7	1500
HMCP150U4C	4	150	A	57.0 - 75.0	750
			B	76.0 - 95.0	1000
			C	96.0 -114.0	1250
			D	115.0 -130.7	1500
			E	③	1750
			F	③	2000
			G	③	2250
			H	③	2500

Instruction Leaflet/FRED Number 29C401

Special Low Magnetic Protection Application MCP

600 Vac Maximum, 250 Vdc Maximum

MCP Catalog Number	NEMA Starter Size	Continuous Amperes	Cam Setting	Motor Full Load Center Amperes	MCP Trip Setting②
HMCP025D0C	–	25A	A	–	40
	–		B	–	43
	–		C	–	46
	–		D	–	49
	–		E	–	52
	–		F	–	55
	–		G	–	58
	–		H	–	60
HMCP050G2C	–	50A	A	–	80
	–		B	–	87
	–		C	–	93
	–		D	–	98
	–		E	–	103
	–		F	–	109
	–		G	–	115
	–		H	–	120
HMCP070J2C	–	70A	A	–	115
	–		B	–	122
	–		C	–	130
	–		D	–	139
	–		E	–	145
	–		F	–	153
	–		G	–	160
	–		H	–	170
HMCP100L3C	–	100A	A	–	160
	–		B	–	174
	–		C	–	185
	–		D	–	196
	–		E	–	207
	–		F	–	218
	–		G	–	229
	–		H	–	240

Instruction Leaflet/FRED Number 29C407

MCPs for Application with Motor Starters Equipped with Electronic Overload Relays

600 Vac Maximum, 250 Vdc Maximum

MCP Catalog Number	NEMA Starter Size	Continuous Amperes	Cam Setting	Motor Full Load Center Amperes①	MCP Trip Setting②
HMCPS003A0C	0	3	A	.69 - .91	9
			B	.92 - 1.0	12
			C	1.1 - 1.2	15
			D	1.3 - 1.5	18
			E	1.6 - 1.7	21
			F	1.8 - 1.9	24
			G	2.0 - 2.2	27
			H	2.3 - 2.5	30
HMCPS007C0C	0	7	A	1.5 - 2.0	21
			B	2.1 - 2.5	28
			C	2.6 - 3.1	35
			D	3.2 - 3.6	42
			E	3.7 - 3.9	49
			F	4.3 - 4.7	56
			G	4.8 - 5.2	63
			H	5.3 - 5.7	70
HMCPS015E0C	0	15	A	3.4 - 4.5	45
			B	4.6 - 5.6	60
			C	5.7 - 6.8	75
			D	6.9 - 7.9	90
			E	8.0 - 9.1	105
			F	9.2 - 10.3	120
			G	10.4 - 11.4	135
			H	11.5 - 12.6	150
HMCPS030H1C	1	30	A	6.9 - 9.1	90
			B	9.2 - 11.4	120
			C	11.5 - 13.7	150
			D	13.8 - 16.0	180
			E	16.1 - 18.3	210
			F	18.4 - 20.6	240
			G	20.7 - 22.9	270
			H	23.0 - 25.2	300
HMCPS050K2C	2	50	A	11.5 - 15.2	150
			B	15.3 - 19.1	200
			C	19.2 - 22.9	250
			D	23.0 - 26.8	300
			E	26.9 - 30.6	350
			F	30.7 - 34.5	400
			G	34.6 - 38.3	450
			H	38.4 - 42.1	500
HMCPS100R3C	3	100	A	23.0 - 30.6	300
			B	30.7 - 38.3	400
			C	38.4 - 46.0	500
			D	46.1 - 53.7	600
			E	53.8 - 61.4	700
			F	61.5 - 69.1	800
			G	69.2 - 76.8	900
			H	76.9 - 84.5	1000
HMCPS150T4C	4	150	A	34.6 - 46.0	450
			B	46.1 - 57.5	600
			C	57.6 - 69.1	750
			D	69.2 - 80.6	900
			E	80.7 - 92.2	1050
			F	92.3 -103.7	1200
			G	103.8 -115.2	1350
			H	115.3 -126.7	1500
HMCPS150U4C	4	150	A	57.0 - 75.0	750
			B	76.0 - 95.0	1000
			C	96.0 -114.0	1250
			D	115.0 -130.7	1500
			E	③	1750
			F	③	2000
			G	③	2250
			H	③	2500

Instruction Leaflet/FRED Number 29C401

Type ELC Current Limiter Attachment (Size 0-4)

The type ELC current limiter attachment for the Series C MCP is designed to provide increased interrupting capacity. The combination may be used for the application up to 200,000A symmetrical at 600 Vac making the MCP suitable for use in network distribution systems or other applications where unusually high fault currents are available. The current limiter connects to the load end of the MCP and is provided with terminals suitable for copper or aluminum conductors. (See table).

Limiters are coordinated with the MCP so that normal fault currents are interrupted automatically by the MCP without any damage to the limiter. Only the rare very high fault is opened by the limiter. Faults that are interrupted by the limiter are interrupted by the limiter also magnetically trip the MCP, opening all three poles, preventing single-phase operation.

Each of the three poles of the type ELC limiter is equipped with an indicator that extends when a fault is interrupted by the limiter.

Type ELC Current Limiter Terminal Wire Sizes④

Type ELC Current Limiter Maximum Amperes	Standard Aluminum Terminals		Nonstandard Terminals (Steel)	
	Wire Range AWG	Metric (mm^2)	Wire Range AWG	Metric (mm^2)
50	#14-2	2.5-35	#14-2⑤	2.5-35
100	#1-4/0	50-95	–	–
150	#1-4/0	50-95	–	–

ELC Current Limiter Attachment

MCP Rating (Amperes)	Catalog Number
3	ELC3003R
7	ELC3007R
15	ELC3015R
30	ELC3030R
50	ELC3050R
100	ELC3100R
150	ELC3150R

Instruction Leaflet/FRED Number 29C401

① Motor FLA ranges are typical. The corresponding trip setting is at 13 times the minimum FLA value shown. Where a 13 times setting is required for an intermediate FLA value, alternate cam settings and/or MCP ratings should be used.

② For Dc applications, actual trip levels are approximately 40% higher than values shown.

③ Settings above 130 amperes are for special applications. NEC Article 430-110(a) requires the ampere rating of the disconnecting means to be not less than 115% of the motor full load ampere rating.

④ Terminal wire connectors are UL listed for standard stranded wire sizes as defined in UL486A or UL486B.

⑤ Optional on special order for copper cable only.

J-Frame

600 Vac Maximum, 250 Vdc Maximum

MCP Catalog Number①	NEMA Starter Size	Continuous Amperes	Cam Setting	Motor Full Load Center Amperes②	MCP Trip Setting③
HMCP250A5C	4	250	A	27.0 - 30.7	350
	4		B	30.8 - 33.8	400
	4		C	33.9 - 36.9	440
	5		D	37.0 - 40.3	480
	5		E	40.4 - 43.8	525
	5		F	43.9 - 46.9	570
	5		G	47.0 - 50.7	610
	5		H	50.8 - 53.8	660
	5		I	53.9 - 57.2	700
HMCP250C5C	5	250	A	34.7 - 38.8	450
	5		B	38.9 - 43.4	505
	5		C	43.5 - 47.6	565
	5		D	47.7 - 52.2	620
	5		E	52.3 - 56.5	680
	5		F	56.6 - 60.7	735
	5		G	60.8 - 64.9	790
	5		H	65.0 - 69.2	845
	5		I	69.3 - 73.5	900
HMCP250D5C	5	250	A	38.5 - 43.4	500
	5		B	43.5 - 48.0	565
	5		C	48.1 - 53.0	625
	5		D	53.1 - 57.6	690
	5		E	57.7 - 62.3	750
	5		F	62.4 - 67.3	810
	5		G	67.4 - 71.9	875
	5		H	72.0 - 76.9	935
	5		I	77.0 - 81.6	1000
HMCP250F5C	5	250	A	48.1 - 53.8	625
	5		B	53.9 - 59.9	700
	5		C	60.0 - 66.1	780
	5		D	66.2 - 72.3	860
	5		E	72.4 - 78.4	940
	5		F	78.5 - 83.8	1020
	5		G	83.9 - 89.9	1090
	5		H	90.0 - 96.1	1170
	5		I	96.2 - 102.0	1250
HMCP250G5C	5	250	A	57.7 - 64.6	750
	5		B	64.7 - 71.9	840
	5		C	72.0 - 79.2	935
	5		D	79.3 - 86.5	1030
	5		E	86.6 - 93.8	1125
	5		F	93.9 - 101.1	1220
	5		G	101.2 - 108.4	1315
	5		H	108.5 - 115.3	1410
	5		I	115.4 - 122.4	1500

MCP Catalog Number①	NEMA Starter Size	Continuous Amperes	Cam Setting	Motor Full Load Center Amperes②	MCP Trip Setting③
HMCP250J5C	5	250	A	67.4 - 75.3	875
	5		B	75.4 - 83.8	980
	5		C	83.9 - 92.3	1090
	5		D	92.4 - 100.7	1200
	5		E	100.8 - 109.2	1310
	5		F	109.3 - 117.6	1420
	5		G	117.7 - 126.1	1530
	5		H	126.2 - 134.6	1640
	5		I	134.7 - 142.8	1750
HMCP250K5C	5	250	A	77.0 - 86.6	1000
	5		B	86.6 - 96.1	1125
	5		C	96.2 - 105.7	1250
	5		D	105.8 - 115.3	1375
	5		E	115.4 - 124.9	1500
	5		F	125.0 - 134.6	1625
	5		G	134.7 - 144.2	1750
	5		H	144.3 - 153.8	1875
	5		I	153.9 - 163.3	2000
HMCP250L5C	5	250	A	86.6 - 97.3	1125
	5		B	97.4 - 108.4	1265
	5		C	108.5 - 118.8	1410
	5		D	118.9 - 129.9	1545
	5		E	130.0 - 140.7	1690
	5		F	140.8 - 151.5	1830
	5		G	151.6 - 162.3	1970
	5		H	162.4 - 173.0	2110
	5		I	173.1 - 183.6	2250
HMCP250W5C	5	250	A	96.2 - 108.0	1250
	5		B	108.1 - 119.9	1405
	5		C	120.0 - 132.3	1560
	5		D	132.4 - 144.2	1720
	5		E	144.3 - 156.1	1875
	5		F	156.2 - 168.0	2030
	5		G	168.1 - 179.9	2185
	5		H	180.0 - 192.3	2340
	5		I	192.4 - 204.0	2500

Instruction Leaflet/FRED Number 29C402

① Three-pole catalog numbers shown. Two-pole catalog numbers begin with"HM2P" in place of "HMCP."

② Motor FLA ranges are typical. The corresponding trip setting is at 13 times the minimum FLA value shown. Where a 13 times setting is required for an intermediate FLA value, alternate cam settings and/or MCP ratings should be used.

③ For Dc applications, actual trip levels are approximately 40% higher than values shown.

K-Frame

600 Vac Maximum, 250 Vdc Maximum

MCP Catalog Number①	NEMA Starter Size	Continuous Amperes	Cam Setting	Motor Full Load Center Amperes②	MCP Trip Setting③
HMCP400D5C	5	400	A	38.5 - 43.4	500
	5		B	43.5 - 48.0	565
	5		C	48.1 - 53.0	626
	5		D	53.1 - 57.6	690
	5		E	57.7 - 62.3	750
	5		F	62.4 - 67.3	810
	5		G	67.4 - 71.9	875
	5		H	72.0 - 76.9	935
	5		I	77.0 - 81.6	1000
HMCP400F5C	5	400	A	48.1 - 53.8	625
	5		B	53.9 - 59.9	700
	5		C	60.0 - 66.1	780
	5		D	66.2 - 72.3	860
	5		E	72.4 - 78.4	940
	5		F	78.5 - 83.8	1020
	5		G	83.9 - 89.9	1090
	5		H	90.0 - 96.1	1170
	5		I	96.2 - 102.0	1250
HMCP400G5C	5	400	A	57.7 - 64.6	750
	5		B	64.7 - 71.9	840
	5		C	72.0 - 79.2	935
	5		D	79.3 - 86.5	1030
	5		E	86.6 - 93.8	1125
	5		F	93.9 - 101.1	1220
	5		G	101.2 - 108.4	1315
	5		H	108.5 - 115.3	1410
	5		I	115.4 - 122.4	1500
HMCP400J5C	5	400	A	67.4 - 75.3	875
	5		B	75.4 - 83.8	980
	5		C	83.9 - 92.3	1090
	5		D	92.4 - 100.7	1200
	5		E	100.8 - 109.2	1310
	5		F	109.3 - 117.6	1420
	5		G	117.7 - 126.1	1530
	5		H	126.2 - 134.6	1640
	5		I	134.7 - 142.8	1750
HMCP400K5C	5	400	A	77.0 - 86.5	1000
	5		B	86.6 - 96.1	1125
	5		C	96.2 - 105.7	1250
	5		D	105.8 - 115.3	1375
	5		E	115.4 - 124.9	1500
	5		F	125.0 - 134.6	1625
	5		G	134.7 - 144.2	1750
	5		H	144.3 - 153.8	1875
	5		I	153.9 - 163.3	2000

MCP Catalog Number①	NEMA Starter Size	Continuous Amperes	Cam Setting	Motor Full Load Center Amperes②	MCP Trip Setting③
HMCP400L5C	5	400	A	86.6 - 97.3	1125
	5		B	97.4 - 108.4	1265
	5		C	108.5 - 118.8	1410
	5		D	118.9 - 129.9	1545
	5		E	130.0 - 140.7	1690
	5		F	140.8 - 151.5	1830
	5		G	151.6 - 162.3	1970
	5		H	162.4 - 173.0	2110
	5		I	173.1 - 183.6	2250
HMCP400W5C	5	400	A	96.2 - 108.0	1250
	5		B	108.1 - 119.9	1405
	5		C	120.0 - 132.3	1560
	5		D	132.4 - 144.2	1720
	5		E	144.3 - 156.1	1875
	5		F	156.2 - 168.0	2030
	5		G	168.1 - 179.9	2185
	5		H	180.0 - 192.3	2340
	5		I	192.4 - 204.0	2500
HMCP400N5C	5	400	A	115.4 - 129.9	1500
	5		B	130.0 - 144.2	1690
	5		C	144.3 - 158.4	1875
	5		D	158.5 - 173.0	2060
	5		E	173.1 - 187.6	2250
	5		F	187.7 - 201.9	2440
	5		G	202.0 - 216.1	2625
	5		H	216.2 - 230.7	2810
	5		I	230.8 - 244.9	3000
HMCP400R5C	5	400	A	134.7 - 151.5	1750
	5		B	151.6 - 168.4	1970
	5		C	168.5 - 185.3	2190
	5		D	185.4 - 201.9	2410
	5		E	202.0 - 218.8	2625
	5		F	218.9 - 235.7	2845
	5		G	235.8 - 252.6	3065
	5		H	252.7 - 269.2	3285
	5		I	269.3 - 285.7	3500
HMCP400X5C	5	400	A	153.9 - 173.0	2000
	5		B	173.1 - 192.3	2250
	5		C	192.4 - 211.5	2500
	5		D	211.6 - 230.7	2750
	5		E	230.8 - 249.9	3000
	5		F	250.0 - 269.2	3250
	5		G	269.3 - 288.4	3500
	5		H	288.5 - 307.6	3750
	5		I	307.7 - 326.9	4000

Instruction Leaflet/FRED Number 29C403

L-Frame④

600 Vac Maximum

MCP Catalog Number	NEMA Starter Size	Continuous Amperes	Cam Setting	Motor Full Load Center Amperes②	MCP Trip Setting
HMCP600L6W	6	600	A	138.5 - 184.5	1800
	6		B	184.6 - 230.7	2400
	6		C	230.8 - 276.8	3000
	6		D	276.9 - 323.0	3600
	6		E	323.1 - 369.1	4200
	6		F	369.2 - 415.3	4800
	6		G	415.4 - 461.4	5400
	6		H	461.5 - 507.7	6000

Instruction Leaflet/FRED Number 29C404

① Three-pole catalog numbers shown. Two-pole catalog numbers begin with"HM2P" in place of "HMCP."
② Motor FLA ranges are typical. The corresponding trip setting is at 13 times the minimum FLA value shown. Where a 13 times setting is required for an intermediate FLA value, alternate cam settings and/or MCP ratings should be used.
③ For Dc applications, actual trip levels are approximately 40% higher than values shown.
④ Equipped with electronic trip device.

Typical Series C Earth Leakage Circuit Breaker

General Information

Series C Earth Leakage Breakers offer superior Class 1 ground fault protection and improved ground fault coordination capability.

Earth leakage ground fault protection differs from other types of systems in its level of sensitivity. The sensitivity of traditional devices is limited by the cumulative error of the residual current sensors and the placement of the phase and neutral conductors inside the current sensor.

Leakage breakers are zero sequence sensing devices. They are factory supplied with a single sensor and ground fault relay built-in. This technique allows for protection sensitivities down to the 30 milliampere level.

Leakage breakers are provided with a full complement of easy adjustments. The ground fault pickup setting is adjustable from 0.03 to 30 amperes in eight steps, and the ground fault time delay setting is adjustable from instantaneous to 2.0 seconds in six steps. When the pickup is set to 30 mA, the time delay setting defaults internally to instantaneous only. Increased selectivity provides for improved coordination with upstream and downstream ground fault devices as well as the flexibility to adjust for transient currents.

Applications

Three-Phase, Four-Wire Loads

For three-phase applications with line-to-neutral loads, select 4-pole earth leakage breakers and wire the neutral through the fourth (right) pole.

Three-Phase, Three-Wire Loads

For applications with only three-phase, three-wire, line-to-line connected loads, select 3-pole earth leakage breakers.

Single-Phase Loads

For single-phase, two-wire or three-wire applications, use a 3-pole earth leakage breaker and connect all conductors through the breaker.

Accessories

Optional Factory Installed Internal Accessories

Earth leakage breakers use the same internal accessories as standard F-, J- and K-Frame Series C Breakers. Internal accessories fit in the right-hand pole space and are available as factory modifications only.

Optional External Accessories

Series C Earth Leakage Breakers use the same external accessories as the standard F-, J- and K-Frame circuit breakers.

Selection Guide and Ordering Information

F-Frame Earth Leakage Ground Fault Breakers UL 489 and UL 1053 – Catalog Numbers

Amperes③	25 kA at 480 VAC		65 kA at 480 VAC		100 kA at 480 VAC	
	3-Pole	4-Pole	3-Pole	4-Pole	3-Pole	4-Pole
35	ELFD3035L	ELFD4035L	ELHFD3035L	ELHFD4035L	ELFDC3035L	ELFDC4035L
40	ELFD3040L	ELFD4040L	ELHFD3040L	ELHFD4040L	ELFDC3040L	ELFDC4040L
45	ELFD3045L	ELFD4045L	ELHFD3045L	ELHFD4045L	ELFDC3045L	ELFDC4045L
50	ELFD3050L	ELFD4050L	ELHFD3050L	ELHFD4050L	ELFDC3050L	ELFDC4050L
60	ELFD3060L	ELFD4060L	ELHFD3060L	ELHFD4060L	ELFDC3060L	ELFDC4060L
70	ELFD3070L	ELFD4070L	ELHFD3070L	ELHFD4070L	ELFDC3070L	ELFDC4070L
80	ELFD3080L	ELFD4080L	ELHFD3080L	ELHFD4080L	ELFDC3080L	ELFDC4080L
90	ELFD3090L	ELFD4090L	ELHFD3090L	ELHFD4090L	ELFDC3090L	ELFDC4090L
100	ELFD3100L	ELFD4100L	ELHFD3100L	ELHFD4100L	ELFDC3100L	ELFDC4100L
110	ELFD3110L	ELFD4110L	ELHFD3110L	ELHFD4110L	ELFDC3110L	ELFDC4110L
125	ELFD3125L	ELFD4125L	ELHFD3125L	ELHFD4125L	ELFDC3125L	ELFDC4125L
150	ELFD3150L	ELFD4150L	ELHFD3150L	ELHFD4150L	ELFDC3150L	ELFDC4150L

J-Frame Earth Leakage Ground Fault Breakers UL 489 and UL 1053 – Catalog Numbers

Amperes	35 kA at 480 VAC		65 kA at 480 VAC		100 kA at 480 VAC	
	3-Pole	4-Pole	3-Pole	4-Pole	3-Pole	4-Pole
100	ELJD3100	ELJD4100	ELHJD3100	ELHJD4100	ELJDC3100	ELJDC4100
125	ELJD3125	ELJD4125	ELHJD3125	ELHJD4125	ELJDC3125	ELJDC4125
150	ELJD3150	ELJD4150	ELHJD3150	ELHJD4150	ELJDC3150	ELJDC4150
175	ELJD3175	ELJD4175	ELHJD3175	ELHJD4175	ELJDC3175	ELJDC4175
200	ELJD3200	ELJD4200	ELHJD3200	ELHJD4200	ELJDC3200	ELJDC4200
225	ELJD3225	ELJD4225	ELHJD3225	ELHJD4225	ELJDC3225	ELJDC4225
250	ELJD3250	ELJD4250	ELHJD3250	ELHJD4250	ELJDC3250	ELJDC4250

K-Frame Earth Leakage Ground Fault Breakers UL 489 and UL 1053 – Catalog Numbers

Amperes	35 kA at 480 VAC		65 kA at 480 VAC		100 kA at 480 VAC	
	3-Pole	4-Pole	3-Pole	4-Pole	3-Pole	4-Pole
200	ELKD3200	ELKD4200	ELHKD3200	ELHKD4200	ELKDC3200	ELKDC4200
225	ELKD3225	ELKD4225	ELHKD3225	ELHKD4225	ELKDC3225	ELKDC4225
250	ELKD3250	ELKD4250	ELHKD3250	ELHKD4250	ELKDC3250	ELKDC4250
300	ELKD3300	ELKD4300	ELHKD3300	ELHKD4300	ELKDC3300	ELKDC4300
350	ELKD3350	ELKD4350	ELHKD3350	ELHKD4350	ELKDC3350	ELKDC4350
400	ELKD3400	ELKD4400	ELHKD3400	ELHKD4400	ELKDC3400	ELKDC4400

Standard Line and Load Terminals – Included with Breaker

Frame		Wire Type	(Number) Range of Conductors	Terminal Material
F-Frame	35-100A	Cu/Al	(1) #14-1/0	Steel
F-Frame	110-150A	Cu/Al	(1) #4-4/0	Stainless Steel
J-Frame	100-250A	Cu/Al	(1) #4-250 kcmil	Aluminum
K-Frame	200-350A	Cu/Al	(1) 250-500 kcmil	Aluminum
K-Frame	400A	Cu/Al	(2) 3/0-250 kcmil	Aluminum

Optional K-Frame Line and Load Terminals – Order Separately

Wire Type	(Number) Range of Conductors	Terminal Material	Catalog Number
Cu/Al Cu/Al	(2) 250 kcmil (1) 500 kcmil	Aluminum Aluminum	**3TA401K①**
Cu/Al Cu/Al	(2) 250 kcmil (1) 500 kcmil	Aluminum Aluminum	**4TA401K②**
Cu	(1) 3-350 kcmil	Copper	**T300K**
Cu	(1) 3-350 kcmil	Copper	**T300K**
Cu	(1) 250-500 kcmil	Copper	**T350K**
Cu	(1) 250-500 kcmil	Copper	**T350K**
Cu	(1) 3/0-250 kcmil	Copper	**3T400K①**
Cu	(1) 3/0-250 kcmil	Copper	**3T400K②**

F-Frame HMCP with Earth Leakage Ground Fault

Continuous Amperes	Catalog Number 3-Pole
3	ELHMCP003A0C
7	ELHMCP007C0C
15	ELHMCP015E0C
25	ELHMCP025X0C
30	ELHMCP030H1C
50	ELHMCP050K2C
70	ELHMCP070M2C
100	ELHMCP100R3C
150	ELHMCP150T4C
150	ELHMCP150U4C
3	ELHMCP003A0LC
7	ELHMCP007C0LC
15	ELHMCP015E0LC
25	ELHMCP025D0C
30	ELHMCP030H1LC
50	ELHMCP050G2C
70	ELHMCP070J2C
100	ELHMCP100L3C
–	ELHMCP024D0IC
–	ELHMCP050G2IC
–	ELHMCP070J2IC
100	ELHMCP100K3C

HMCPs for Application with Motor Starters Equipped with Electrical Overload Relays

3	ELHMCPS003A0C
7	ELHMCPS007C0C
15	ELHMCPS015E0C
30	ELHMCPS030H1C
50	ELHMCPS050K2C
100	ELHMCPS100R3C
150	ELHMCPS150T4C
150	ELHMCPS140U4C

J-Frame HMCP with Earth Leakage Ground Fault

Continuous Amperes	Catalog Number 3-Pole
250	ELHMCP250A5 ELHMCP250C5 ELHMCP250D5 ELHMCP250F5 ELHMCP250G5 ELHMCP250J5 ELHMCP250K5 ELHMCP250L5 ELHMCP250W5
400	ELHMCP400D5 ELHMCP400F5 ELHMCP400G5 ELHMCP400J5 ELHMCP400K5

① Package of 3 terminals.
② Package of 4 terminals.
③ 15, 20, 25, and 30 ampere available.

Type FCL Current Limit-R Thermal-Magnetic Circuit Breakers

15 to 100 Amperes, 480 Volts Ac
Non-Interchangeable Trip, Line and Load Terminals Included

Type FCL Breaker

Dimensions / Weights

Dimensions, Inches

Number of Poles	Width	Height	Depth
2-3	4.125 (104.78)	8.75 (222.25)	3.375 (85.73)

Approximate Shipping Weight, Lbs. (kg)

2-Pole	9 (4.082)
3-Pole	9 (4.082)

Listed with Underwriters Laboratories, Inc. except as noted.
Type FCL breakers are not defined in Federal Specification W-C-375-b.

Interrupting Capacity Ratings

Circuit Breaker Type	Volts Ac (50/60 Hz)	Interrupting Capacity (Symmetrical Amperes) (kA)
FCL	240 480	200 150

On all 3-phase Delta, Grounded B phase applications, refer to Cutler-Hammer.

Maximum Continuous Ampere Rating @ 40°C	2-Pole①	3-Pole
	Catalog Number	
15	FCL2015L	FCL3015L
20	FCL2020L	FCL3020L
25	FCL2025L	FCL3025L
30	FCL2030L	FCL3030L
35	FCL2035L	FCL3035L
40	FCL2040L	FCL3040L
45	FCL2045L	FCL3045L
50	FCL2050L	FCL3050L
60	FCL2060L	FCL3060L
70	FCL2070L	FCL3070L
80	FCL2080L	FCL3080L
90	FCL2090L	FCL3090L
100	FCL2100L	FCL3100L

Line and Load Terminals

Breakers listed include line and load terminals. Terminals are Underwriters Laboratories, Inc. listed for wire sizes and types listed below. When used with aluminum cable, use joint compound. To order optional aluminum terminals, add suffix "Z" to breaker catalog number listed.

Maximum Breaker Amperes	Wire Type	AWG Wire Range
Standard Pressure Terminals		
100	Al/Cu	#14-1/0
Optional Al/Cu Pressure Terminals		
50	Al/Cu	#14-#4
100	Al/Cu	#4-4/0

① 2-pole breakers are supplied in 3-pole frames with current carrying parts omitted from the center pole.

Type LCL Current Limit-R Electronic Circuit Breakers

125 to 400 Amperes, 600 Volts Ac with Solid State Trip Units

Type LCL Breaker

Dimensions / Weights

Dimensions, Inches

Number of Poles	Width	Height	Depth
2-3	16 (406.40)	8.25 (209.56)	4.0625 (103.19)

Approximate Shipping Weight, Lbs. (kg)

Standard	
2-Pole	32 (14.515)
3-Pole	32 (14.515)
With Ground Fault	
3-Pole	36 (16.329)

Listed with Underwriters Laboratories, Inc. except as noted.
Type LCL breakers are not defined in Federal Specification W-C-375-b.

Interrupting Capacity Ratings

Circuit Breaker Type	Volts Ac (50/60 Hz)	Interrupting Capacity (Symmetrical Amperes) (kA)
LCL	240 480 600	200 200 100

On all 3-phase Delta, Grounded B phase applications, refer to Cutler-Hammer.

Standard Breakers 600 Volts Ac, 50/60 Hz

Complete breaker requires frame, rating plug and terminals

Frame Only			
Poles①	Standard (Long Delay, Magnetic Trip and Current Limiting)	Magnetic Only② and Current Limiting	Long Delay, Magnetic Trip and Adjustable Short Delay Time (.08-.28 seconds), and Current Limiting
	Catalog Number		
Types LCL and LCLA 250 Ampere Frame (125-250 Amperes)			
2 3	LCL2250F LCL3250F	LCL2250FM LCL3250FM	LCLA2250F LCLA3250F
Type LCL and LCLA 400 Ampere Frame (200-400 Amperes)			
2 3	LCL2400F LCL3400F	LCL2400FM LCL3400FM	LCLA2400F LCLA3400F

Instruction Leaflet/FRED Number 15257

Breakers with Built-in Ground Fault Protection

Complete breaker requires frame, rating plug and terminals – extra current transformer included for neutral.

Frame Only		
Poles①	Standard (Long Delay, Magnetic Trip, Current Limiting, and Ground Fault Trip)	Long Delay, Magnetic Trip and Adjustable Short Delay Time (.06-.22 seconds), and Ground Fault Trip and Current Limiting
	Catalog Number	
Types LCLG and LCLGA 250 Ampere Frame (125-250 Amperes)		
3	LCLG3250F	LCLGA3250F
Types LCLG and LCLGA 400 Ampere Frame (200-400 Amperes)		
3	LCLG3400F	LCLGA3400F

Instruction Leaflet/FRED Number 15495

Terminals③ (Order Separately)

Two terminals are required per pole. Terminals are Underwriters Laboratories, Inc. listed for wire type and range listed below. When used with aluminum cable, use joint compound.

Maximum Breaker Amperes	Wire Range, Type, Number of Cables	Terminal Catalog Number
Standard Copper Pressure Terminals		
225 400	1#6-350 kcmil Cu 1#4-250 kcmil Cu, plus 1 3/0-600 kcmil Cu	T225LA T401LA
Optional Al/Cu Pressure Terminals		
225 400	1#6-350 kcmil Cu, or 1#4-350 kcmil Al 1#4-250 kcmil Al/Cu, plus 1 3/0-600 kcmil Al/Cu	TA225LA1 TA400LA1

① 2-pole breakers are supplied in 3-pole frames with current carrying parts omitted from the center pole.
② UL listed recognized component.
③ Terminals shipped separately from breaker.

Rating Plug Selection Data

Rating plugs listed below are for both standard breakers and breakers with built-in ground fault protection.

Rating Plugs Only (For 2- or 3-Pole Frames)

Continuous Ampere Rating	Magnetic Trip Setting, Amperes		Fixed Rating Plugs	Adjustable Rating Plugs④
	Low	High	Catalog Number	
Types LCL and LCLA 250 Ampere Frames				
125	375	1125	2LCL125	–
150	450	1350	2LCL150	–
175	525	1575	2LCL175	A2LCL175⑤
200	600	1800	2LCL200	A2LCL200
225	675	2025	2LCL225	A2LCL225
250	750	2250	2LCL250	A2LCL250⑥
Types LCL and LCLA 400 Ampere Frames				
200	400	1600	4LCL200	–
225	450	1800	4LCL225	–
250	500	2000	4LCL250	–
275	550	2200	4LCL275	–
300	600	2400	4LCL300	A4LCL300⑤
350	700	2800	4LCL350	A4LCL350
400	800	3200	4LCL400	A4LCL400⑥

④ Adjustable 70 to 100% except as noted.
⑤ Adjustable 75 to 100%.
⑥ Adjustable 50 to 100%.

Type FB Tri-Pac Thermal-Magnetic Circuit Breakers

15 to 100 Amperes, 600 Volts Ac, 250 Volts Dc, Replaceable Current Limiters

Type Tri-Pac FB Breaker

Dimensions / Weights

Dimensions, Inches

Number of Poles	Width	Height	Depth
2-3	4.125 (104.78)	8.75 (222.25)	3.5 (88.90)

Approximate Shipping Weight, Lbs. (kg)

Breaker	Complete Breaker	
	2-Pole	3-Pole
Tri-Pac FB	10.5	11.5

Listed with Underwriters Laboratories, Inc. except as noted.
Tri-Pac FB breakers meet the requirements for Class 16a, 16b, 17a and 26a circuit breakers as defined in Federal Specification W-C-375b.

Interrupting Capacity Ratings

Underwriters Laboratories, Inc. Listed

600 Volts Ac Maximum: 200,000 Amperes Symmetrical

Based on NEMA Test Procedures

250 Volts Dc Maximum: 100,000 Amperes.

On all 3-phase Delta, Ground B phase applications, refer to Cutler-Hammer.

① 2-pole breakers are supplied in 3-pole frames with current carrying parts omitted from the center pole.

Maximum Continuous Ampere Rating @ 40°C	2-Pole①	3-Pole
	Catalog Number (Current Limiters Included)	
15	FB2015PL	FB3015PL
20	FB2020PL	FB3020PL
30	FB2030PL	FB3030PL
40	FB2040PL	FB3040PL
50	FB2050PL	FB3050PL
60	FB2060PL	FB3060PL
70	FB2070PL	FB3070PL
90	FB2090PL	FB3090PL
100	FB2100PL	FB3100PL

Line and Load Terminals

Breakers listed include line and load terminals. Terminals are Underwriters Laboratories, Inc. listed for wire sizes and types listed below. When used with aluminum cable, use joint compound. To order optional aluminum terminals, add suffix "Z" to breaker catalog number listed.

Maximum Breaker Amperes	Wire Type	AWG Wire Range
Standard Pressure Terminals		
100	Al/Cu	#14-1/0
Optional Al/Cu Pressure Terminals		
50	Al/Cu	#14-#4
100	Al/Cu	#4-4/0

Replacement Current Limiters and Housing Assembly

Current Limiters: One required per pole.

Application	Catalog Number
Supplied as standard in Type FB Tri-Pac breakers rated 15-100 amperes. Replaces 200FBP03 formerly supplied on 15-40 ampere ratings, and 500FBP07 formerly supplied on 50-100 ampere ratings.	**100FBP06**

Refer to CAT.71.01.T.E for complete application information.

Current Limiter Housing Assembly Complete with Current Limiter

Ampere Rating	Poles	Style Number
15-100	2	**176C593G09**
15-100	3	**176C593G10**

Type LA Tri-Pac Thermal-Magnetic Circuit Breakers

70 to 400 Amperes, 600 Volts Ac, 250 Volts Dc, 2-, 3-Pole, Interchangeable Trip, Replaceable Current Limiters

Type Tri-Pac LA Breaker

Dimensions / Weights

Dimensions, Inches

Number of Poles	Width	Height	Depth
2-3	8.25 (209.56)	16 (406.40)	4.75 (113.54)

Approximate Shipping Weight, Lbs. (kg)

Breaker	Complete Breaker		Frame Only		Trip Unit	
	2-Pole	3-Pole	2-Pole	3-Pole	2-Pole	3-Pole
Tri-Pac LA	29.75	34	23.5	25	2.25	3

Listed with Underwriters Laboratories, Inc. except as noted.
Tri-Pac LA breakers meet the requirements for Class 16a, 16b, 17a and 26a circuit breakers as defined in Federal Specification W-C-375b.

Interrupting Capacity Ratings

Underwriters Laboratories, Inc. Listed

600 Volts Ac Maximum: 200,000 Amperes Symmetrical

Based on NEMA Test Procedures

250 Volts Dc Maximum: 100,000 Amperes.

On all 3-phase Delta, Ground B phase applications, refer to Cutler-Hammer.

Continuous Ampere Rating @40°C	Magnetic Trip Setting Amperes④		Complete Breaker	Shipped as Frame, Trip Units, Limiters and Terminals⑤		
			Includes Pressure Type Copper Terminals⑤	Frame Only	Trip Unit Only	Current Limiter 1 Required per Pole
	Low	High	Catalog Number			
2 Poles, 600 Volts Ac, 250 Volts Dc⑥						
70	350	700	LA2070PR	LA2400PRF	LA2070PT	200LAP08
90	450	900	LA2090PR	LA2400PRF	LA2090PT	200LAP08
100	500	1000	LA2100PR	LA2400PRF	LA2100PT	200LAP08
125	625	1250	LA2125PR	LA2400PRF	LA2125PT	200LAP08
150	750	1500	LA2150PR	LA2400PRF	LA2150PT	200LAP08
175	875	1750	LA2175PR	LA2400PRF	LA2175PT	200LAP08
200	1000	2000	LA2200PR	LA2400PRF	LA2200PT	200LAP08
225	1125	2250	LA2225PR	LA2400PRF	LA2225PT	400LAP10
250	1250	2500	LA2250PR	LA2400PRF	LA2250PT	400LAP10
300	1500	3000	LA2300PR	LA2400PRF	LA2300PT	400LAP10
350	1750	3500	LA2350PR	LA2400PRF	LA2350PT	400LAP10
400	2000	4000	LA2400PR	LA2400PRF	LA2400PT	400LAP10
3 Poles, 600 Volts Ac, 250 Volts Dc						
70	350	700	LA3070PR	LA3400PRF	LA3070PT	200LAP08
90	450	900	LA3090PR	LA3400PRF	LA3090PT	200LAP08
100	500	1000	LA3100PR	LA3400PRF	LA3100PT	200LAP08
125	625	1250	LA3125PR	LA3400PRF	LA3125PT	200LAP08
150	750	1500	LA3150PR	LA3400PRF	LA3150PT	200LAP08
175	875	1750	LA3175PR	LA3400PRF	LA3175PT	200LAP08
200	1000	2000	LA3200PR	LA3400PRF	LA3200PT	200LAP08
225	1125	2250	LA3225PR	LA3400PRF	LA3225PT	400LAP10
250	1250	2500	LA3250PR	LA3400PRF	LA3250PT	400LAP10
300	1500	3000	LA3300PR	LA3400PRF	LA3300PT	400LAP10
350	1750	3500	LA3350PR	LA3400PRF	LA3350PT	400LAP10
400	2000	4000	LA3400PR	LA3400PRF	LA3400PT	400LAP10

Instruction Leaflet/FRED Number 14551 for Trip Unit and Fuse

Current Limiters

Included with breaker, one required per pole.

Application	Catalog Number
Supplied as standard on ratings through 200 amperes.	200LAP08
Supplied as standard on 225 through 400 ampere ratings, optional on lower ratings when a higher "cross-over point" is desired. (Above two limiters replace 800LAP12 formerly supplied as standard on all ratings, 600LAP09 optional on all ratings through 300 amperes, 300LAP05 optional on ratings through 150 amperes, and special rating limiter 1000LAP14.)	400LAP10
Special rating where a higher "cross-over point" is desired on 200 ampere and higher ratings (Replaces limiter 1500LAP20)	500LAP15 ②③

① New limiters suitable for replacement in existing breakers by using plug-in conductor from old limiter (instructions included with limiter). Instruction Leaflet/FRED Number 14824
② Not listed with Underwriters Laboratories, Inc.
③ Protection based on 100,000 ampere maximum fault, 480 volts maximum.
④ Set on high side, adjustable to lower limits.

Terminals⑤

Two terminals are required per pole. Terminals are Underwriters Laboratories, Inc. listed for wire size and type listed below. When used with aluminum conductors, use joint compound. To order optional aluminum terminals, add suffix "Z" to complete breaker catalog number.

Maximum Breaker Amperes	Wire Range, Type, Number of Cables	Terminal Catalog Number
Standard Copper Pressure Terminals		
225	1 #6-350 kcmil Cu	T225LA
225⑦	1 #6-250 kcmil Cu	T225LBF
400	1 #4-250 kcmil Cu, plus 1 3/0-600 kcmil Cu	T401LA
Optional Al/Cu Pressure Terminals		
225	1 #6-350 kcmil Cu, or 1 #4-350 kcmil Cu/Al	TA225LA1
400	1 #4-250 kcmil Al/Cu, plus 1 3/0-600 kcmil Al/Cu	TA400LA1

Instruction Leaflet/FRED Number 13732

⑤ Terminals shipped separately from breakers.
⑥ 2-pole breakers or trips are supplied in 3-pole frames with current carrying parts omitted from the center pole.
⑦ Optional terminal.

Type NB Tri-Pac Thermal-Magnetic Circuit Breakers

300 to 800 Amperes, 600 Volts Ac, 250 Volts Dc①, 2-, 3-Pole, Interchangeable Trip, Replaceable Current Limiters

Type Tri-Pac NB Breaker

Continuous Ampere Rating @40°C	Magnetic Trip Setting Amperes④		Complete Breaker	Shipped as Frame, Trip Units, Limiters and Terminals		
			Includes Pressure Type Copper Terminals⑤	Frame Only	Trip Unit Only	Current Limiter 1 Required per Pole
	Low	High	Catalog Number			
2 Poles, 600 Volts Ac, 250 Volts Dc①③						
300	1500	3000	**NB2300P**	**NB2800PF**	**NB2300PT**	**500NBP12**
350	1750	3500	**NB2350P**	**NB2800PF**	**NB2350PT**	**500NBP12**
400④	2000	4000	**NB2400P**	**NB2800PF**	**NB2400PT**	**500NBP12**
500④	2500	5000	**NB2500P**	**NB2800PF**	**NB2500PT**	**500NBP12**
600④	3000	6000	**NB2600P**	**NB2800PF**	**NB2600PT**	**800NBP20**
700④	3000	6000	**NB2700P**	**NB2800PF**	**NB2700PT**	**800NBP20**
800④	3000	6000	**NB2800P**	**NB2800PF**	**NB2800PT**	**800NBP20**
3 Poles, 600 Volts Ac Only						
300	1500	3000	**NB3300P**	**NB3800PF**	**NB3300PT**	**500NBP12**
350	1750	3500	**NB3350P**	**NB3800PF**	**NB3350PT**	**500NBP12**
400④	2000	4000	**NB3400P**	**NB3800PF**	**NB3400PT**	**500NBP12**
500④	2500	5000	**NB3500P**	**NB3800PF**	**NB3500PT**	**500NBP12**
600④	3000	6000	**NB3600P**	**NB3800PF**	**NB3600PT**	**800NBP20**
700④	3000	6000	**NB3700P**	**NB3800PF**	**NB3700PT**	**800NBP20**
800④	3000	6000	**NB3800P**	**NB3800PF**	**NB3800PT**	**800NBP20**

Instruction Leaflet/FRED Number 13771 for Trip Unit and Fuse

Dimensions / Weights

Dimensions, Inches

Number of Poles	Width	Height	Depth
2-3	8.25 (209.56)	22 (558.80)	5.5 (139.70)

Approximate Shipping Weight, Lbs. (kg)

Breaker	Complete Breaker		Frame Only		Trip Unit	
	2-Pole	3-Pole	2-Pole	3-Pole	2-Pole	3-Pole
Tri-Pac NB	62	75	58	65	3.5	4

Listed with Underwriters Laboratories, Inc. except as noted.
Tri-Pac NB breakers meet the requirements for Class 16b, 17a and 26a circuit breakers as defined in Federal Specification W-C-375b.

Interrupting Capacity Ratings

Underwriters Laboratories, Inc. Listed

600 Volts Ac Maximum: 200,000 Amperes Symmetrical

Based on NEMA Test Procedures

250 Volts Dc Maximum①: 100,000 Amperes.

On all 3-phase Delta, Grounded B phase applications, refer to Cutler-Hammer.

Current Limiters

Included with breaker, one required per pole.

Application	Catalog Number
Supplied as standard on ratings through 500 amperes.	**500NBP12**
Supplied as standard on 600 through 800 ampere ratings, optional on lower ratings when a higher "cross-over point" is desired. Above two limiters replace 1000NBP14 formerly supplied on ratings up to 600 amperes, 1500NBP20 supplied on 700 amperes, and 2500NBP25 supplied on 800 amperes.	**800NBP20**

Terminals②

Two terminals are required per pole. Terminals are Underwriters Laboratories, Inc. listed for wire size and type listed below. When used with aluminum conductors, use joint compound. To order optional aluminum terminals, add suffix "Z" to complete breaker catalog number.

Maximum Ampere Rating	Wire Range, Type, Number of Cables	Terminal Catalog Number
Standard Copper Pressure Terminals		
350	1 #1-600 kcmil Cu	**T350NB**
700	2 2/0-500 kcmil Cu	**T700NB1**
800	3 3/0-500 kcmil Cu	**T1000NB1**
Optional Al/Cu Pressure Terminals		
700	2 #1-500 kcmil Al/Cu	**TA700NB1**
800	3 3/0-400 kcmil Al/Cu	**TA1000NB1**
800	3 500-750 kcmil Al/Cu	**TA1201NB1**

① Dc rating applies to 350 amperes maximum thermal or to magnetic only breakers.
② Shipped separately from breaker
③ 2-pole breakers or trips are supplied in 3-pole frames with current carrying parts omitted from the center pole.
④ 60 Hz Ac only.

Type PB Tri-Pac Thermal-Magnetic Circuit Breakers

600 to 1600 Amperes, 600 Volts Ac, 60 Hertz Ac①, 250 Volts Dc②, 2-, 3- Poles Interchangeable Trip, Replaceable Current Limiters

Type Tri-Pac PB Breaker

Continuous Ampere Rating @40°C	Ac Magnetic Trip Setting (Set on High Side, Adjustable to Lower Limits)		Complete Breaker	Shipped as Frame, Trip Unit Current Limiters and Connectors		
			Includes Rear "T" Connectors⑤	Frame Only	Trip Unit Only④	Current Limiter 1 Required per Pole
	Low	High	Catalog Number			
2 Poles, 600 Volts Ac⑤						
600	1500	5000	PB2600PR	PB21600PRF	PB2600PRT	1000PBPR20
700	1500	5000	PB2700PR	PB21600PRF	PB2700PRT	1000PBPR20
800	1500	5000	PB2800PR	PB21600PRF	PB2800PRT	1000PBPR20
900	1500	5000	PB2900PR	PB21600PRF	PB2900PRT	1000PBPR20
1000	1500	5000	PB21000PR	PB21600PRF	PB21000PRT	1000PBPR20
1200	2000	6000	PB21200PR	PB21600PRF	PB21200PRT	1600PBPR30
1400	2500	7000	PB21400PR	PB21600PRF	PB21400PRT	1600PBPR30
1600	3000	8000	PB21600PR	PB21600PRF	PB21600PRT	1600PBPR30
3 Poles, 600 Volts Ac Only						
600	1500	5000	PB3600PR	PB31600PRF	PB3600PRT	1000PBPR20
700	1500	5000	PB3700PR	PB31600PRF	PB3700PRT	1000PBPR20
800	1500	5000	PB3800PR	PB31600PRF	PB3800PRT	1000PBPR20
900	1500	5000	PB3900PR	PB31600PRF	PB3900PRT	1000PBPR20
1000	1500	5000	PB31000PR	PB31600PRF	PB31000PRT	1000PBPR20
1200	2000	6000	PB31200PR	PB31600PRF	PB31200PRT	1600PBPR30
1400	2500	7000	PB31400PR	PB31600PRF	PB31400PRT	1600PBPR30
1600	3000	8000	PB31600PR	PB31600PRF	PB31600PRT	1600PBPR30

Dimensions / Weights

Dimensions, Inches

Number of Poles	Width	Height	Depth
2-3	12.0625 (306.39)	22.125 (561.98)	9.0625 (230.19)

Approximate Shipping Weight, Lbs. (kg)

Breaker	Complete Breaker		Frame Only		Trip Unit	
	2-Pole	3-Pole	2-Pole	3-Pole	2-Pole	3-Pole
Tri-Pac PB	148	179	106	120	18	23

Listed with Underwriters Laboratories, Inc. except as noted.
Tri-Pac PB breakers meet the requirements for Class 17a and 26a circuit breakers as defined in Federal Specification W-C-375b.

Interrupting Capacity Ratings

Underwriters Laboratories, Inc. Listed

600 Volts Ac Maximum: 200,000 Amperes Symmetrical

Based on NEMA Test Procedures

250 Volts Dc②: 100,000 Amperes.

On all 3-phase Delta, Grounded B phase applications, refer to Cutler-Hammer.

Current Limiters

Included with breaker, one required per pole.

Application	Catalog Number
Supplied as standard on ratings through 1000 amperes. (Replaces limiter 1500PBPR30 formerly supplied on 600 and 700 ampere ratings, and 3000 PBPR27 supplied on 800-1000 ampere ratings.	1000PBPR20
Supplied as standard on 1200 through 1600 ampere ratings. Optional on lower ratings where a higher "cross-over point" is desired. (Replaces limiter 4000PBR30 formerly supplied on 1200 through 1400 ampere ratings, and 5000PBPR42 supplied on 1600 ampere ratings.	1600PBPR30

Bus Bar Connectors⑥

"T" Connector for Cu/Al Bus

Two required per pole. For rear bus connection. Accepts up to four bus bolts. May be rotated 90'

Catalog Number
BA2000B

Cable Connector

(Optional)

For "T" connector. Accepts four 600 kcmil copper cables.

Style Number
505C706G04

Special Breakers⑥

Magnetic Only Type Tri-Pacs:
Available on request.

① Higher frequency calibration not available. Minimum of 50 Hz calibration available on special order.
② 250 volts Dc rating applies only to magnetic only breakers.
③ Shipped separately from breaker.
④ Magnetic only trip units are available. Order by description.
⑤ 2-pole breakers are supplied in 3-pole frames with current carrying parts omitted from center pole.
⑥ Not listed with Underwriters Laboratories, Inc.

Alarm Switch

For light or alarm indication when breaker trips. Does not function with manual operation. Automatically resets when breaker is relatched. Standard leads extend 18 inches outside of breaker. Longer leads may be specified. Not field mountable.

Breaker Frame	Normal Pole Meeting	Contact Operation (Specific Type Desired)
FCL	Center	Make or Break
LA Tri-Pac	Left	Make or Break
NB Tri-Pac	Left	Make or Break
PB Tri-Pac	Left	Make or Break
LCL	Left①	Make or Break

Alarm Switch Contact Rating (Non Inductive) LA Tri-Pac: 10 amperes, 120 volt Ac; 5A, 240 volt Ac.

Auxiliary Switch②

For auxiliary control circuits. Miniature switches mount within breaker. Commonly used for remote indication of open or closed breaker and electrically interlocking component control circuits. "A" contacts are closed when breaker is closed. "B" contacts are open when breaker is closed. Standard leads extend 18 inches outside of breaker. Longer leads may be specified.

Auxiliary Switch Attachment Kits for Field Mounting③④

Breaker Type	For Right-Hand Mounting		For Left-Hand Mounting		Maxmum Ac Voltage Rating⑤	Maximum Non-Inductive Amperes
	1A-1B	2A-2B	1A-1B	2A-2B		
	Style Number					
FCL	**1369D79G03**	–	**1369D79G03**	–	240	5
NB Tri-Pac	**4980D16G05**	**4980D16G06**	**4980D16G12**	**4980D16G13**	480	10
PB Tri-Pac	**2602D32G14**	**2602D32G15**	**2602D32G11**	**2602D32G12**	480	10
LCL	–	–	**1372D49G03**	**1372D49G06**	480	6 (10@240)

Instruction Leaflet/FRED Number 14535 NB Tri-Pac; 14534 PB Tri-Pac; 15279 LCL

Factory Mounted Auxiliary Switches②

All of the above auxiliary switches can be specified for factory mounting at the same price as listed for the kit. These attachments have the leads out the side of the breaker and are UL listed when factory mounted unless other non UL listed modifications are used (except as noted).

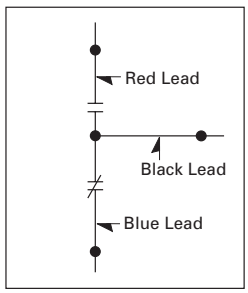

Factory mounted switches only can be supplied for the following breakers: FB Tri-Pac⑥, LA Tri-Pac. Order by description.

① When alarm switch is used in conjunction with auxiliary switch, the auxiliary switch is rated 250 volts max., 5 amperes maximum.
② Left-hand mounting is standard unless otherwise specified.
③ All switches are multiples of 1A-1B with a common electrical connection (See diagram above).
④ Field mounting voids UL listing of breaker except on NB Tri-Pac and PB Tri-Pac breakers.
⑤ For Dc applications refer to factory.
⑥ Right-hand mounting only.

Shunt Trip

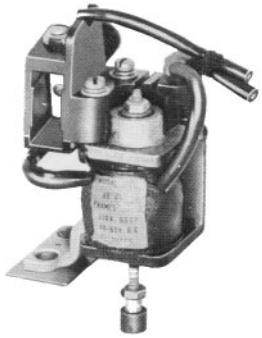

For tripping breaker from a remote point. A solenoid device mounts within breaker case. Breaker trips when coil is energized.

Shunt trips should not be used as circuit interlocks using maintained contact pilot devices.

A cutoff switch breaks the circuit to the momentary rated coil when breaker opens. Available for control voltages up to 250 volts Dc or 600 volts Ac. Voltage and frequency must be specified. Standard leads extend 18 inches outside of breaker. Longer leads may be specified.

Shunt Trip for Field Mounting①②③

Voltage/Hz	Breaker Type					
	Right-Hand Mounting			Left-Hand Mounting		
	FCL	NB Tri-Pac	PB Tri-Pac	FCL	NB Tri-Pac	PB Tri-Pac
	Style Number					
600/50-60 Hz	1369D80G15	2606D58G15	2606D58G15	1369D80G01	2606D58G01	2606D58G01
480/50-60 Hz	1369D80G16	2606D58G16	2606D58G16	1369D80G02	2606D58G02	2606D58G02
240/50-60 Hz	1369D80G17	2606D58G17	2606D58G17	1369D80G03	2606D58G03	2606D58G03
208/50-60 Hz	1369D80G18	2606D58G18	2606D58G18	1369D80G04	2606D58G04	2606D58G04
120/50-60 Hz	1369D80G19	2606D58G19	2606D58G19	1369D80G05	2606D58G05	2606D58G05
60/50-60 Hz	1369D80G20	2606D58G20	2606D58G20	1369D80G06	2606D58G06	2606D58G06
48/50-60 Hz	1369D80G21	2606D58G21	2606D58G21	1369D80G07	2606D58G07	2606D58G07
24/50-60 Hz	1369D80G22	2606D58G22	2606D58G22	1369D80G08	2606D58G08	2606D58G08
250 Dc	1369D80G23	2606D58G23	2606D58G23	1369D80G09	2606D58G09	2606D58G09
125 Dc	1369D80G24	2606D58G24	2606D58G24	1369D80G10	2606D58G10	2606D58G10
60 Dc	1369D80G25	2606D58G25	2606D58G25	1369D80G11	2606D58G11	2606D58G11
48 Dc	1369D80G26	2606D58G26	2606D58G26	1369D80G12	2606D58G12	2606D58G12
24 Dc	1369D80G27	2606D58G27	2606D58G27	1369D80G13	2606D58G13	2606D58G13
12 Dc	1369D80G28	2606D58G28	2606D58G28	1369D80G14	2606D58G14	2606D58G14
Instruction Leaflet/FRED Numbers	15194	14919	14940	15194	14919	14940

Factory mounted shunt trips only can be supplied for FB Tri-Pac④⑤ and LA Tri-Pac breakers. Order by description.

Left-Hand Mounting Kits for Type LCL Current Limiting Breakers⑥

	Style Number
Provision to trip flux transfer shunt trip from external 32 to 120 volt (Dc to 60 Hz) source.⑦⑧	1372D49G22
Provision to trip flux transfer shunt trip from external 240 to 600 volt (50/60 Hz) source.⑧⑨	1372D49G32

Instruction Leaflet/FRED Number 15279

Shunt Trip Coil Data for Type LCL Current Limiting Breakers

Shunt Trip Voltage Rating	Coil Inrush	
	Amperes	Volt-Amperes
120 Ac	.15	18

① 120 volt Ac ratings suitable for 55% pickup for ground fault applications.
② Not field mountable on non-automatic breakers (MCS).
③ Field mounting voids breakers' UL listing except on NB Tri-Pac and PB Tri-Pac.
④ Right-hand mounting only.
⑤ Not UL listed.
⑥ UL listing pending. Refer to Cutler-Hammer.
⑦ Rated 48 volts minimum for ground fault applications.
⑧ Also available factory mounted for 24 volt Dc. Order by description.
⑨ Not for ground fault.

Standard Undervoltage Release①

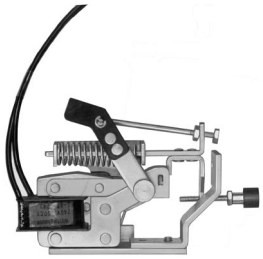

For undervoltage protection. A solenoid device mounts within breaker case. Coil must be energized before closing breaker. Trips breaker when voltage drops below 40 to 60% of coil rating. Picks up and seals in at 80% of coil rating. For line voltages up to 250 volts Dc or 600 volts Ac. Externally mounted resistors are supplied for certain ratings. Standard leads extend 18 inches outside of breaker. Longer leads may be specified.

Note: U.V.R. attachments are not designed for, and should not be used as, circuit interlocks. For further information, refer to Cutler-Hammer.

Factory Mounted Undervoltage Releases②

NB Tri-Pac and PB Tri-Pac undervoltage releases can be specified for factory mounting at the same price as the kit. These attachments have the leads out the side and are UL listed when factory mounted unless other non-UL listed modifications are used.

Factory mounted undervoltage releases only can be supplied for the following breakers: FB Tri-Pac③, LA Tri-Pac and FCL; LCL 120 Volts Ac only.④ Order by description.

Undervoltage Release Attachment Kits for Field Mounting⑤⑥

Attachment Voltage, Hz	Breaker Type			
	For Right-Hand Mounting		For Left-Hand Mounting	
	NB Tri-Pac	PB Tri-Pac	NB Tri-Pac	PB Tri-Pac
	Style Number			
24 60	–	–	–	–
48 60	–	5674D29G16	–	5674D29G08
120 60	373D632G01	5674D29G09	373D632G05	5674D29G01
208 60	373D632G19	5674D29G10	373D632G20	5674D29G02
240 60	373D632G02	5674D29G11	373D632G06	5674D29G03
480 60	373D632G03	5674D29G13	373D632G07	5674D29G05
600 60	373D632G04	5674D29G14	373D632G08	5674D29G06
12 Dc	372D032G01	4976D85G01	372D032G06	4976D85G11
24 Dc	372D032G02	4976D85G02	372D032G07	4976D85G12
48 Dc	372D032G03	4976D85G03	372D032G08	4976D85G13
60 Dc	–	4976D85G04	–	4976D85G14
125 Dc	372D032G04	4976D85G07	372D032G09	4976D85G17
250 Dc	372D032G05	4976D85G08	372D032G10	4976D85G18
Instruction Leaflet/FRED Number	14961	13231	14961	13231

Undervoltage Release Coil Data

Voltage Rating, Hz	Breaker Type				
	FB Tri-Pac			LCL	
	Coil Amperes	Series Resistance (Ohms)	Total VA	Coil Amperes	Total VA
600 Ac	0.020	25,000	12.0	–	–
480 Ac	0.016	25,000	7.7	–	–
240 Ac	0.021	6,000	5.1	–	–
208 Ac	0.019	6,000	4.0	–	–
120 Ac	0.023	–	2.8	.05	6
60 Ac	0.203	250	12.2	–	–
48 Ac	0.245	150	11.8	–	–
24 Ac	0.250	50	6.0	–	–
250 Ac	0.026	5,000	6.5	–	–
125 Ac	0.026	–	3.3	–	–
60 Ac	0.248	200	14.9	–	–
48 Ac	0.260	150	12.5	–	–
24 Ac	0.141	–	3.4	–	–
12 Ac	0.286	–	3.5	–	–

Voltage Rating, Hz	Breaker Type					
	LA Tri-Pac, PB Tri-Pac			NB Tri-Pac		
	Coil Amperes	External Series Resistance (Ohms)	Total VA	Coil Amperes	External Series Resistance (Ohms)	Total VA
600 Ac	0.029	20,000	17.4	0.016	35,000	9.6
480 Ac	0.014	–	6.8	0.013	30,000	6.3
240 Ac	0.036	–	8.7	0.013	–	3.2
208 Ac	0.036	–	7.5	0.018	–	3.8
120 Ac	0.073	–	8.8	0.023	–	2.8
48 Ac	0.152	–	7.3	–	–	–
250 Dc	0.035	5,000	8.8	0.013	16,500	3.3
125 Dc	0.039	1,500	4.9	0.013	6,500	1.7
60 Dc	0.034	–	2.1	–	–	–
48 Dc	0.040	–	2.0	0.012	600	0.6
24 Dc	0.069	–	1.7	0.023	–	0.6
12 Dc	0.136	–	1.7	0.048	–	0.6

① Not UL listed.
② Right-hand mounting considered standard unless specified otherwise.
③ Right-hand mounting only.
④ UL listing pending.
⑤ Not field mountable on nonautomatic breakers (Molded case switches).
⑥ Field mounting voids UL listing of breaker except on NB Tri-Pac and PB Tri-Pac.

Rear Connected Studs①

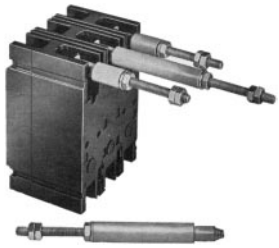

For complete stud assembly, order a stud and appropriate tube based on thickness of customer's mounting panel. A short stud must be assembled adjacent to a long stud to maintain clearances required by Underwriters Laboratories, Inc.② Two studs are required per pole.

Mounting Panel Thickness, Inches	Stud		Tube③	
	Length	Style Number	Length	Style Number
FCL and FB Tri-Pac Breakers				
1	Short	**451D874G01**	1 1/16	**32B9446H20**
	Long	**451D874G02**	3 7/16	**32B9446H24**
11/16 - 15/16	Short	**451D874G01**	1 3/8	**32B9446H21**
	Long	**451D874G02**	3 3/4	**32B9446H25**
3/8 - 5/8	Short	**451D874G01**	1 11/16	**32B9446H22**
	Long	**451D874G02**	4 1/16	**32B9446H26**
1/4 - 5/16	Short	**451D874G01**	2	**32B9446H23**
	Long	**451D874G02**	4 3/8	**32B9446H27**

Stud Ampere Rating	Diameter, Inches and Thread	Extension Back of Breaker, Inches	Stud Style Number
LCL, LA Tri-Pac Breakers			
400④	3/4 -16	5 15/32	**05B7383G15**
400④	3/4 -16	7 31/32	**05B7383G16**
400④	3/4 -16	10 15/32	**05B7383G17**
NB Tri-Pac Breakers			
450	1 1/8 -12	5 1/2	**623B222G01**
450	1 1/8 -12	8	**623B222G02**
450	1 1/8 -12	10 1/2	**623B222G03**
800	1 1/4 -12	5 1/2	**623B375G04**
800	1 1/4 -12	10 1/2	**623B375G03**

Panelboard Connecting Staps①

For connecting line end of breakers to panelboard bus.

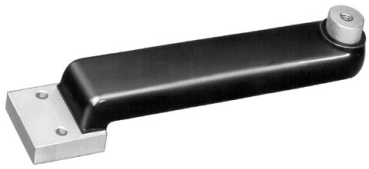

Ampere Rating	Connector Type	Style Number
Power Panelboards (Convertible)		
Tri-Pac FB and FCL Breakers Bus Spacing 3½-inch		
50	Center	**1253C72G01**
50	Outside	**1253C72G02**
100	Center	**1253C73G03**
100	Outside	**1253C73G04**
150	Center	**1253C73G01**
150	Outside	**1253C73G02**
3-Pole Mounting Bracket		**624B600H01**
2-Pole Mounting Bracket		**624B600H02**
LCL Breakers Bus Spacing 3½-inch		
400	Short	**1275C85G01**
400	Medium	**1275C85G02**
400	Long	**1275C85G03**
Mtg. Bracket Kit (1 Req'd)		**751B044G01**

Plug-in Adapter Kits

For rear connected applications such as switchboards. Facilitates ease of installation and front removal of breaker. Includes conductor for mounting on breaker, plug-in mounting blocks with matching conductor, rear studs and mounting hardware. Order two mounting blocks style number when line and load are required; order one mounting block style number when either line or load is required.

Description	Style Number
FB Tri-Pac and FCL Breakers⑤	
1 Mounting Block, Line or Load	
2-Pole, 100 Ampere	**507C036G05**
2-Pole, 150 Ampere	**507C036G06**
3-Pole, 100 Ampere	**507C036G03**
3-Pole, 150 Ampere	**507C036G04**
Instruction Leaflet/FRED Number 13782	
LCL Breakers	
2 Mounting Blocks, Line and Load	
2-Pole	**313C644G25**
3-Pole	**313C644G26**
1 Mounting Block, Line and Load	
2-Pole	**450D010G15**
3-Pole	**450D010G16**
Instruction Leaflet/FRED Number 15329	
NB Tri-Pac Breakers①	
1 Mounting Block, Line or Load	
NB Tri-Pac, 2 Poles	**2614D53G03**
NB Tri-Pac, 3 Poles	**2614D53G04**
Instruction Leaflet/FRED Number 15073	
Tri-Pac LA Breakers①	
2 Mounting Blocks, Line and Load	
2-Pole	**313C644G41**
3-Pole	**313C644G42**
1 Mounting Block, Line Only	
2-Pole	**450D010G17**
3-Pole	**450D010G19**
1 Mounting Block, Load Only	
2-Pole	**450D010G18**
3-Pole	**450D010G20**

① Not Underwriters Laboratories, Inc. listed.
② 400 ampere LA studs of the same length have sufficient clearance; however, customer connections may make it necessary to use a short stud adjacent to a long stud.
③ Included at no charge when ordered with stud.
④ 150, 250, 300 and 400 ampere frames only.
⑤ These plug-in adapter kits are UL listed as recognized components.

Mounting Block for NB Tri-Pac Breakers①

Ampere Rating	Number of Poles	Style Number
NB Tri-Pac		
800	2	**4990D16G04**
800	3	**4990D16G03**

Extended Line Terminal Shields①

For shielding line side terminal connections. One shield required per breaker. Order separately when needed. Sold only in lots of 10, including hardware.

Breaker Frame	Style Number
FB Tri-Pac, FCL	**625B229G01**
LA Tri-Pac	**314C420G05**
NB Tri-Pac	**208B996G02**

Base Mounting Hardware

Order separately when needed.

Breaker Frame	Style Number
FB Tri-Pac, FCL	**21C6782G18**
LA Tri-Pac	**1614613**
NB Tri-Pac	**1091716**
PB Tri-Pac	**624375G22**

Moisture-Fungus-Corrosion Treatment②

Treatment can be provided to meet customer's specific atmospheric conditions. Moisture-fungus treating material used meets JAN-T-152; treatment meets MIL-V-173a. Requests and orders should specify government specifications or conditions to be met.

Handle Locks①

Non-Padlockable

For prevention of unintentional operation of breaker. Fits over breaker handle and may be removed.

Padlockable

For prevention of unauthorized operation of breaker. Is non-removable once installed on breaker. Meets Underwriters Laboratories, Inc. and California Code requirements.

Note: All breakers are trip free and will trip with handle locks attached. Cannot be used when handle extension is used.

Breaker Frame	Style Number
Non-Padlockable	
FB Tri-Pac	**29B2721H01**
LA Tri-Pac	**1720101**
NB Tri-Pac	**1720101**
Padlockable	
FB Tri-Pac	**765A754G01**
LA Tri-Pac	**373B591G02**

Handle Extension

Breaker Frame	Style Number
LA Tri-Pac	**372B399G01**
NB Tri-Pac	**1251C65G01**
PB Tri-Pac②	**315C882G01**

Kirk Key Interlock⑤

Availability: FB, LA, NB, PB Tri-Pacs.

Permits interlocking of two breakers or one breaker with other devices. Before breaker can be closed, key must be inserted and turned in breaker interlock. Breaker must be opened before key can be removed. It can then be inserted in interlock or other devices to permit their closure. Requests and orders should completely outline interlocking scheme, ultimate user and his address.

Mechanical Interlocks②

For mechanically interlocking a pair of breakers so that only one may be closed at one time, but both may be open simultaneously.

Walking Beam Type②③④

Mounts on panel (not included) at rear of breaker. Standard breaker spacing: LA Tri-Pac, NB Tri-Pac: 8-1/2 inches center to center; FB Tri-Pac: 4-3/8 inches center to center; PB Tri-Pac: 12-1/4 inches center to center. Order as a set of two special factory drilled breakers and one walking beam interlock. Specify breaker type, panel thickness and center-to-center dimension of breakers.

Sliding Bar Type (Field Mountable)②⑤

Mounts on panel (not included) fitting over front of breakers. Standard breaker spacing: LA Tri-Pac, NB Tri-Pac: 8-1/2 inches; FB Tri-Pac: 4-3/16 inches center to center.

① Not Underwriters Laboratories, Inc. listed. Insulated base with front removeable bolted connection.
② Included with frame
③ Not UL listed.
④ Not available on drawout breakers.
⑤ Not available for FCL or LCL breakers.
⑥ Not available on motor operated breakers.

Motor Operators①

Motor operators provide complete remote control by means of a push-button or similar pilot device②. Positive switching action is accomplished by use of an operating arm engaging the breaker handle. The unit is energized momentarily to actuate the lever arm moving it to either the "ON" or "OFF" position. The control is broken by an internal cutoff switch. Means for emergency manual operation is provided.

Motor operators are available with motors rated 120 volts Ac, 208 volts Ac, and 240 volts Ac.

The 480 volt operators utilize a 120 volt Ac motor in conjunction with a 480/240 to 120 volt dual voltage transformer. (On LA and larger operators, the transformer is supplied for separate mounting by the customer.)

Note: The motor operator is intended only for infrequent operation in line with Underwriters Laboratories, Inc. endurance standard for AB molded case breakers.

For FB Tri-Pac/FCL Breakers

For LA Tri-Pac Breakers

For NB Tri-Pac Breakers

For PB Tri-Pac Breakers

Motor Operator Selection

Type Breaker	Ac Voltage				Dc Voltage	
	120	208	240	480	125	24
	Style Number					
FCL	**656D148G15**	**656D148G10**	**656D148G17**	**656D148G17**	–	–
LCL	**5664D54G83**	**5664D54G86**	**5664D54G84**	**5664D54G85**	**5664D54G77**	**5664D54G88**
FB Tri-Pac	**656D148G11**	**656D148G04**	**656D148G13**	**656D148G13**	–	–
LA Tri-Pac	**2607D97G22**	**2607D97G25**	**2607D97G23**	**2607D97G24**	**2607D97G44**	–
NB Tri-Pac	**5664D54G65**	**5664D54G68**	**5664D54G66**	**5664D54G67**	**5664D54G82**	–
PB Tri-Pac	**5661D52G01**	**5661D52G04**	**5661D52G02**	**5661D52G03**	**5661D52G17**	–

Instruction Leaflet/FRED Number 13148 FCL; 15334 LCL; 13148 FB Tri-Pac; 15533 LA Tri-Pac; 15534 NB Tri-Pac; 14444 PB Tri-Pac

Back Mounting Plates

Type Breaker	120, 208, 240, 480 Volts Ac
	Style Number
FB-P/FCL	**1282C01G01**

Motor Data

Type Breaker	Motor		Inrush Current, Ampere (Peak)			Continuous Current (RMS)			Operating Time, Open or Close
	Type	Hp.	120 Volts	208 Volts	240 Volts	120 Volts	208 Volts	240 Volts	
FB Tri-Pac	Split Phase	1/75	10	4	5	2.3	1.17	1.65	1.5 Seconds
LA Tri-Pac	Reversing	–	8	5	4	–	–	–	12 Cycles
NB Tri-Pac	Reversing	–	11	7	6	–	–	–	12 Cycles
PB Tri-Pac	Reversing	–	20	12	11	–	–	–	10 Cycles

① Ac voltage rated operators are UL listed as recognized components.
② The pilot device must be maintained contact type for FB Tri-Pac, FCL, mechanisms; momentary contact type for all others.

Drawout Frame

These drawout frames are for use with standard 3-pole Cutler-Hammer molded case circuit breakers. They consist of two separate parts; stationary mounting frame and movable carrier frame. Slide rails are drawer-type, and a screw mechanism is used to engage or withdraw the movable carrier frame.

The drawout frames have three positions: connected, test and disconnected. The frames do not include a safety tripping interlock, or secondary contacts. These are optional items and may be ordered at additional cost.

Breakers mounted in the drawout frames can be equipped with standard breaker accessories including shunt trip, undervoltage release, auxiliary switch, alarm switch and motor operator.

Selection Data

Breaker Type①	Stationary Mounting Frame Style Number	Movable Carrier Frame Style Number
NB Tri-Pac	2603D85G09	2608D34G12

Standard Installation

Order one stationary mounting frame and one movable carrier frame.

Order breakers without terminals or rear connectors.

Order any attachments desired (shunt trip, undervoltage release, etc.)

Order secondary contacts as required:

- A shunt trip, undervoltage release or alarm switch requires two contacts;
- A 1A-1B auxiliary switch requires three contacts;
- A motor operator requires a maximum of four contacts;
- Others as required.

Secondary Contacts

These are used to disconnect auxiliary circuits when attachments such as shunt trip or motor operator are used. Available in multiples of four contacts with a maximum of 32 contacts for the NB Tri-Pac. They must be factory mounted. Order by description as similar to stationary or moving frame and specify number of contacts required.

Racking Crank

A special crank to engage or withdraw the moving portion of the drawout. A standard 1/2 inch hex socket with extension can be used for this purpose.

Style Number	765A767G01

Cell Switches Mounted on Drawout Frames, All Ratings

Up to four switches can be provided. Order by description.

Each switch provides NO and NC contact that transfers before reaching the test position when being withdrawn, and after the test position when being racked in.

① Drawout for FB and LA Tri-Pac, FCL, and LCL Circuit Breakers are not available. PB Tri-Pac movable is available factory-installed only. Order by description.

General Information

Engine generator molded case circuit breakers are designed specifically for application on diesel engine powered standby generators where high interrupting circuit breakers are not required. The JG through NG breakers are equipped with a special trip unit, that includes standard thermal (overload) protection and special low magnetic pickup range (FG includes a fixed thermal/magnetic pickup). The standard thermal trip unit provides overload protection for conductors per the National Electric Code. The low magnetic pickup range is approximately two to five times the continuous rating and provides closer low level short circuit protection when applied on generators that have very low short circuit capacity. This combination allows the user to customize the breaker to the generator output.

Interrupting Capacity Ratings

UL 489 Interrupting Capacity Ratings

Interrupting Capacity (Symmetrical Amperes)

Volts Ac (50/60 Hz)	
240	18,000
480	14,000
600	10,000

IEC 947-2 Interrupting Capacity Ratings

Interrupting Capacity (Symmetrical Amperes)

Volts Ac (50/60 Hz)	
220, 240	18,000/9,000
380, 415	14,000/7,000
660, 690	10,000/5,000

Standards

Engine generator molded case circuit breakers are designed to conform with the following standards:

- Underwriters Laboratories, Inc., Standard UL 489, Molded Case Circuit Breakers and Circuit Breaker Enclosures File E7819
- Canadian Standards Association Standard C22.2 No. 5, Service Entrance and Branch Circuit Breakers
- International Electrotechnical Commission Recommendations IEC 947-2, Circuit Breakers

Conformance with these standards satisfies most local and international codes, assuming user acceptability and simplified application.

Catalog Numbering System

This information is presented only as an aid to understanding catalog numbers. It is not to be used to build catalog numbers for circuit breakers.

FG breakers include both line and load side terminals.

JG, KG, LG, and NG breakers with "W" catalog number suffix do not include any terminals.

JG, KG, LG, and NG breakers without "W" catalog number suffix include both line and load terminals.

Contact Cutler-Hammer for additional ratings and internal/external accessories.

FG 3 100 W

Frame	Number of Poles	Trip Amperes	Suffix
FG	3	15	W: Without Terminals
		20	
		25	
		30	
		35	
		40	
		45	
		50	
		60	
		70	
		80	
		90	
		100	
		125	
		150	
		175	
		200	
		225	
JG		175	
		200	
		225	
		250	
KG		300	
		350	
		400	
LG		450	
		500	
		600	
NG		700	
		800	
		900	
		1000	
		1200	

The following table lists FG through NG engine generator breakers with the maximum generator kVA and kW rating. Engine generator breakers are applied at 115% of the generator full load current rating. The maximum kW rating is based on three-phase generators at 80% power factor.

Magnetic Pickup Range	Maximum Generator Rating 60 Hz						Engine Generator Breaker Catalog Number
	240 Vac		480 Vac		600 Vac		
	kVA①	kW②	kVA①	kW②	kVA①	kW②	
Fixed	5	4	11	9	14	11	FG3015
Fixed	7	6	14	12	18	14	FG3020
Fixed	9	7	18	14	23	18	FG3025
Fixed	11	9	22	17	27	22	FG3030
Fixed	13	10	25	20	32	25	FG3035
Fixed	14	12	29	23	36	29	FG3040
Fixed	16	13	32	26	41	32	FG3045
Fixed	18	14	36	29	45	36	FG3050
Fixed	22	17	43	35	54	43	FG3060
Fixed	25	20	51	40	63	51	FG3070
Fixed	29	23	58	46	72	58	FG3080
Fixed	32	26	65	52	81	65	FG3090
Fixed	36	29	72	58	90	72	FG3100
Fixed	40	32	79	64	99	79	FG3110
Fixed	45	36	90	72	113	90	FG3125
Fixed	54	43	108	87	135	108	FG3150
Fixed	63	51	126	101	158	126	FG3175
Fixed	72	58	144	116	181	144	FG3200
Fixed	81	65	162	130	203	162	FG3225
350-700	63	51	126	101	158	126	JG3175W③ JG3175
350-700	72	58	144	116	181	144	JG3200W③ JG3200
350-700	81	65	162	130	203	162	JG3225W③ JG3225
350-700	90	72	181	144	226	181	JG3250W③ JG3250
500-1000	108	87	217	173	271	217	KG3300W③ KG3300
500-1000	126	101	253	202	316	253	KG3350W③ KG3350
1000-2000	144	116	289	231	361	289	KG3400W③ KG3400
600-2500	162	130	325	260	406	325	LG3450 LG3450W③
600-2500	181	144	361	289	451	361	LG3500 LG3500W③
600-2500	217	173	433	347	542	433	LG3600 LG3600W③
800-2500	253	202	505	404	632	505	NG3700 NG3700W③
800-2500	289	231	578	462	722	578	NG3800 NG3800W③
1600-5000	325	260	650	520	812	650	NG3900 NG3900W③
1600-5000	361	289	722	578	903	722	NG31000 NG31000W③
1600-5000	433	347	867	693	1083	867	NG31200 NG31200W③

① Breaker continuous current is based on 115% of the generator full load ampere rating.
② Based on three-phase generators at 80% power factor.
③ Without terminals.

Enclosure Description

Type 1 General Purpose

- Surface or Flush Mounting
- 15-1200 Ampere Range
- 600 Volts Ac, 500 Volts Dc

Type 1 enclosed breakers are designed for use in commercial buildings, apartment buildings and other areas where a general purpose enclosure is applicable. The breaker is front operable and is capable of being padlocked in either the On or Off position. Ratings through 1200 amperes are listed with Underwriters Laboratories, Inc. as approved for service entrance application. Both surface and flush mounted enclosures are available.

Type 3R Rainproof Surface Mounting

- Interchangeable Hubs (Through 400 Amperes)
- 15-1200 Ampere Range
- 600 Volts Ac, 500 Volts Dc

This general purpose outdoor service center employs a circuit breaker inside a weatherproof sheet steel breaker enclosure to serve as a main disconnect and protective device for feeder circuits. Ratings through 1200 amperes are listed by Underwriters Laboratories, Inc. as suitable for service entrance application.

Type 12 Dustproof Surface Mounting

- No Knockouts or Other Openings
- 15-1200 Ampere Range
- 600 Volts Ac, 500 Volts Dc

The Type 12 enclosure is designed in line with specifications for special industry application where unusually severe conditions involving oil, coolant, dust and other foreign materials exist in the operating atmosphere. The handle padlocks in the Off position and the cover is interlocked with the handle mechanism to prevent opening the cover with the circuit breaker in the On position. Ratings through 1200 amperes are listed by Underwriters Laboratories, Inc. as suitable for service entrance application.

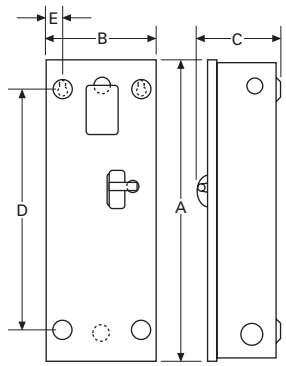

Type 1 Surface Mounted

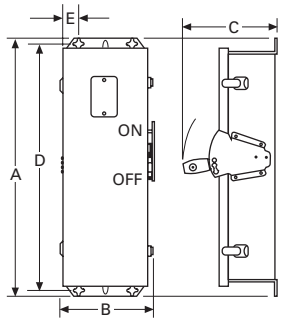

Type 3R Rainproof

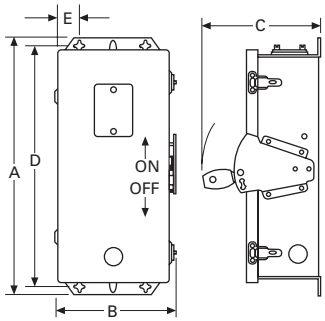

Type 12, 12K Dustproof

Enclosure Selection Data

Breaker Frame (Amperes)	Enclosure Type Class	Dimensions A Inches	A mm	B Inches	B mm	C Inches	C mm	D Inches	D mm	E Inches	E mm	App. Wt. Lbs.	Conduit Sizes, Inches	Catalog Number
FG 15-225	Type 1 Type 3R Type 12	23.25 25.66 25.66	591 652 652	8.41 8.84 8.84	214 225 226	6.28 9.31 9.31	160 237 238	18.75 24.28 24.28	476 617 618	1.20 1.70 1.70	31 43 43	15 19 18	.25, .50, .75, 1, 1.25, 1.50, 2, 2.50 .25, .50, .75, 1, 1.25, 1.50, 2, 2.50	**SFDN225** **RFDN225** **JFDN225**
JG 175-250	Type 1 Type 3R Type 12	34.70 37.50 37.53	881 891 953	10.92 11.56 11.56	227 294 294	7.20 10.22 10.22	183 260 260	30.00 35.77 35.77	762 909 909	1.88 1.94 1.94	48 49 49	31 40 37	.25, .50, 2, 2.50, 3 .25, .50, 2, 2.50, 3	**SJDN250** **RJDN250** **JJDN250**
KG 300-400	Type 1 Type 3R Type 12	38.81 41.69 41.69	986 997 997	11.06 11.75 11.75	281 298 298	10.94 14.06 14.06	278 357 357	34.00 39.90 39.90	869 1014 1015	2.28 1.97 1.97	58 50 50	53 60 53	.25, .50, .75, 1.50, 2, 2.50, 3, 3.50 .25, .50, .75, 2.50, 3, 3.50	**SKDN400** **RKDN400** **JKDN400**
LG 450-600	Type 1 Type 3R Type 12	45.88 48.31 48.31	1165 1227 1227	14.31 14.91 14.91	364 379 379	12.38 15.50 15.50	314 394 394	46.56 46.56 46.56	1183 1183 1183	1.91 1.92 1.92	48 49 49	81 84 81	.25, .50, .75, 3, 3.50, 4 .25, .50, .75, 3, 3.50, 4	**SJDN600** **RLDN600** **JLDN600**
NG 700-1200	Type 1 Type 3R Type 12	61.22 63.59 63.59	1555 1615 1615	21.44 22.00 22.00	545 559 559	15.41 17.63 17.63	391 448 448	61.84 61.84 61.84	1571 1571 1571	1.97 1.97 1.97	50 50 50	178 175 170		**SNDN1200** **RNDN1200** **JNDN1200**

Accessories

Standard Terminals

Breaker Frame	Maximum Ampere Rating	AWG Wire Range	Metric Wire Range mm^2	Catalog Number
FG	100	#14-1/0	2.5 -50	**3T100FB**①
FG	150	#4-4/0	25 -95	**3TA225FD**①
JG	250	#4-350 kcmil	25 -185	**TA250KB**
KG	350	250-500 kcmil	120 -240	**TA350K**
KG	400	3/0-250 kcmil (2)	95 -120	**3TA400K**①
LG	600	250-500 kcmil (2)	120 -240	**TA600LA**
NG	700	1-500 kcmil (2)	50 -300	**TA700NB1**
NG	1000	3/0-400 kcmil (3)	95 -185	**TA1000NB1**
NG	1200	4/0-500 kcmil (4)	120 -300	**TA1200NB1**

Neutral Kits, Insulated and Groundable

Maximum Enclosure Rating (Amperes)	Main Lug Number Size Cu/Al	Ground Lug Size Cu/Al	Catalog Number
100	(1) 14–1/0	(1) 14–1/0	**INK100**
250	(1) 6–350 kcmil	(1) 4–300 kcmil	**INK250**
400	(1) 4–750 kcmil or (2) 1/0–250 kcmil	(1) 4–300 kcmil	**INK400**
600	(2) 250–500 kcmil	(1) 4–300 kcmil	**INK600**
1200	(3) 1/0 to 750 kcmil or (4) 1/0 to 750 kcmil	(1) #6–250 kcmil	**INK1200**

Internal Accessories

Breaker Frame	Auxiliary Switch		Shunt Trip	
	1A-1B Catalog Number	2A-2B Catalog Number	Rating	Catalog Number
FG	**A1X1PK**	**A2X1PK**	12-24 Vdc	**SNT1LP03K**
JG	**A1X2PK**	**A2X2PK**	12-24 Vdc	**SNT2P04K**
KG	**A1X3PK**	**A2X3PK**	12-24 Vdc	**SNT3P05K**
LG	**A1X4PK**	**A2X4PK**	12-24 Vdc	**SNT4LP03K**
NG	**A1X5RPK**	**A2X5RPK**	12-24 Vdc	**SNT5LP03K**

① Package of 3 terminals.

General Information

UL listed dc molded case circuit breakers for use in general dc circuits and ungrounded battery supply circuits of UPS systems providing continuous, reliable ac power to computer controlled applications such as financial transactions and telecommunications.

For standard interrupting capacity 250 dc molded case circuit breakers. Refer to Index, Page 1, for appropriate Series C frame size.

The Series C dc breakers listed below use the same internal and external accessories as the standard Series C breaker. NBDC and PBDC use same internal and external accessories as standard NB and PB breakers.

Molded case circuit breakers for transportation application requiring 750 Vdc are available 15 through 2500 ampere 20 kA interrupting capacity at 750 Vdc. Breakers require 4 poles in series for 750 Vdc application. However, 750V is not a UL rating. For 750 Vdc application refer to Cutler-Hammer for ordering information. Dimensions are the same as the standard thermal-magnetic equivalent.

Interrupting Capacity Ratings

UL489 Interrupting Capacity Ratings

Circuit Breaker Type	Interrupting Capacity (Symmetrical kA)			
	Volts DC①			
	125②	250③	600④	750⑤
HFDDC	42	42	35	20
HJDDC	42	42	35	20
HKDDC	42	42	35	20
HLDDC	42	42	35	20
HMDLDC	42	42	35	20
NBDC	50	50	50	20
PBDC	75	75	75	20

Series Connection Diagrams for DC Application⑥

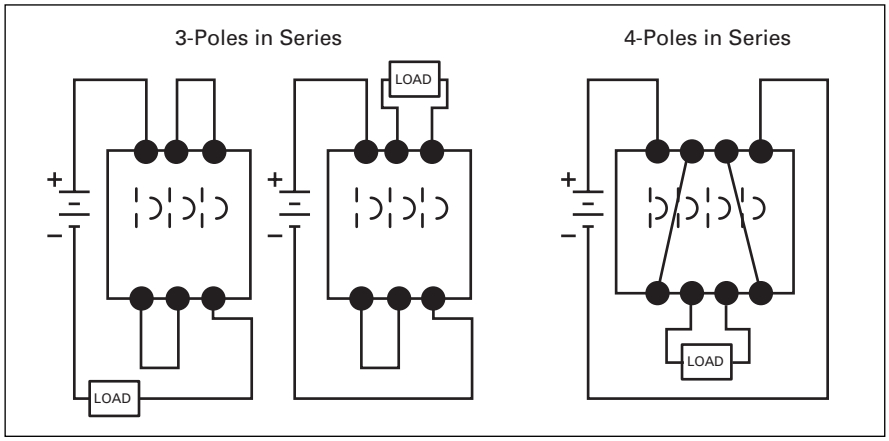

① Dc ratings apply to substantially non-inductive circuits. 8 millisecond time constant.
② 1-pole in series.
③ 2-poles in series.
④ 3-poles in series.
⑤ 4-poles in series. Not a UL listed voltage rating.
⑥ Use rated cable per NEC Connect to terminals as per breaker nameplate.

Type HFDDC DC Circuit Breakers

Maximum Continuous Ampere Rating @ 40°C	Complete Circuit Breaker with Line and Load Terminals		
	1-Pole	2-Pole	3-Pole
	Catalog Number		
1, 2, 3-Pole High Interrupting Capacity 35 kAIC @ 600 Vac			
15	HFDDC1015L	HFDDC2015L	HFDDC3015L
20	HFDDC1020L	HFDDC2020L	HFDDC3020L
25	HFDDC1025L	HFDDC2025L	HFDDC3025L
30	HFDDC1030L	HFDDC2030L	HFDDC3030L
35	HFDDC1035L	HFDDC2035L	HFDDC3035L
40	HFDDC1040L	HFDDC2040L	HFDDC3040L
45	HFDDC1045L	HFDDC2045L	HFDDC3045L
50	HFDDC1050L	HFDDC2050L	HFDDC3050L
60	HFDDC1060L	HFDDC2060L	HFDDC3060L
70	HFDDC1070L	HFDDC2070L	HFDDC3070L
80	HFDDC1080L	HFDDC2080L	HFDDC3080L
90	HFDDC1090L	HFDDC2090L	HFDDC3090L
100	HFDDC1100L	HFDDC2100L	HFDDC3100L
110	HFDDC1110L	HFDDC2110L	HFDDC3110L
125	HFDDC1125L	HFDDC2125L	HFDDC3125L
150	HFDDC1150L	HFDDC2150L	HFDDC3150L
175	–	–	HFDDC3175L
200	–	–	HFDDC3200L
225	–	–	HFDDC3225L

Instruction Leaflet/FRED Number 29C700

Type HJDDC DC Circuit Breakers

Maximum Continuous Ampere Rating @ 40°C	Circuit Breaker Frame Only①	Thermal Magnetic Trip Unit	Standard Terminals
	Catalog Number		
3-Pole High Interrupting Capacity 35 kAIC @ 600 Vac			
70	HJDDC3250F	JT3070T	TA250KB
90		JT3090T	TA250KB
100		JT3100T	TA250KB
125		JT3125T	TA250KB
150		JT3150T	TA250KB
175		JT3175T	TA250KB
200		JT3200T	TA250KB
225		JT3225T	TA250KB
250		JT3250T	TA250KB
100	HKDDC3400F	KT3100T	TA300K
125		KT3125T	TA300K
150		KT3150T	TA300K
175		KT3175T	TA300K
200		KT3200T	TA300K
225		KT3225T	TA300K

Instruction Leaflet/FRED Number 29C701

Type HKDDC DC Circuit Breakers

Maximum Continuous Ampere Rating @ 40°C	Circuit Breaker Frame Only①	Thermal Magnetic Trip Unit	Standard Terminals
	Catalog Number		
3-Pole High Interrupting Capacity 35 kAIC @ 600 Vac			
250	HKDDC3400F	KT3250T	TA350K
300		KT3300T	TA350K
350		KT3350T	TA350K
400		KT3400T	3TA400K
300	HLDDC3600F	LT3300T	TA602LD
350		LT3350T	TA602LD
400		LT3400T	TA602LD
450		LT3450T	TA602LD
500		LT3500T	TA602LD
600		LT3600T	3TA603LDK

Instruction Leaflet/FRED Number 29C702

Type HMDL DC Circuit Breakers

Maximum Continuous Ampere Rating @ 40°C	Circuit Breaker Frame Only①	Thermal Magnetic Trip Unit
	Catalog Number	
3-Pole High Interrupting Capacity 35 kAIC @ 600 Vac		
300	HMDL3800F	MT3300T
350		MT3350T
400		MT3400T
450		MT3450T
500		MT3500T
600		MT3600T
700		MT3700T
800		MT3800T

Type NBDC DC Circuit Breakers

Maximum Continuous Ampere Rating @ 40°C	Complete Circuit Breaker Factory Assembled Without Terminals①	Includes Magnetic Only Trip Unit Calibrated @ 135%	Standard Terminals
	Catalog Number		
3-Pole High Interrupting Capacity 50 kAIC @ 600 Vac			
700	NBDC3700MW	Included	TA1000NB1
800	NBDC3800MW	Included	TA1000NB1
900	NBDC3900MW	Included	TA1000NB1
1000	NBDC31000MW	Included	TA1000NB1
1200	NBDC31200MW	Included	TA1200NB1

Type PBDC DC Circuit Breakers

Maximum Continuous Ampere Rating @ 40°C	Complete Circuit Breaker Factory Assembled Without Terminals①	Includes Magnetic Only Trip Unit Calibrated @ 135%	Standard② Terminals
	Catalog Number		
3-Pole High Interrupting Capacity 75 kAIC @ 600 Vac			
1600	PBDC31600W	Included	BA2000PB
2000	PBDC32000W	Included	BA2000PB
2500	PBDC32500W	Included	BA2500PB

Instruction Leaflet/FRED Number 15560

① Complete circuit breaker includes frame, trip unit, and terminals.

Type GFM

Type GFM Ground Fault Protection Device

Description

Cutler-Hammer Type GFM devices are Class 1 Ground Fault Sensing and Relaying devices designed to comply with the requirements outlined in Underwriters Laboratories, Inc. Standards for Safety entitled: Ground Fault Sensing and Relaying Equipment, UL1053.

Type GFM devices, when properly installed on a grounded electrical distribution system, will sense phase to ground fault currents and cause a disconnect to open and clear the fault instantaneously at predetermined current values. These devices have a maximum voltage rating of 600V, 50/60 Hertz and may be applied in accordance with Article 230-95 of the National Electrical Code.

Type GFM Ground Fault Protective Devices are self-contained combination sensing and relaying devices designed primarily for application on motor circuits and fixed loads where low-level Ground Fault Equipment Protection is required.

GFM devices are available in two basic types with each type having two physical sizes. The two basic types differ in the type of output circuit provided. The first type, designated either GFM2 or GFM4, employs an internal relay having S.P.D.T. contacts that will operate a remote shunt trip device where control power is available.

The second type, designated either GFM2A or GFM4A. is completely solid state with an output SCR circuit designed to operate a remote, low-energy, flux transfer shunt trip mounted in a molded case breaker. No supplementary control power for the shunt trip is required.

Size Selection

The proper size selection is a function of the conductor size of the equipment being protected. Types GFM2/GFM2A have approximately a two-inch window opening. Types GFM4/GFM4A have approximately a four-inch window opening.

Rating Selection

The basic Ground Fault Current Pickup rating of either type GFM device is 5 amperes, i.e., each unit when properly installed will initiate a trip signal to a remote shunt trip with the presence of a 5 ampere Ground Fault Current within established tolerance limits. Separate optional rating plugs are available to alter the pickup rating to a maximum of 100 amperes.

Control Power

Internal control power is not required to operate Type GFM Ground Fault Protective devices. All internal control power required is derived from the Ground Fault current through the internal current sensor.

External control power is required to operate the remote shunt trips used in conjunction with Type GFM2 and GFM4 devices.

External control power is not required with Type GFM2A and GFM4A devices to operate the special remote, low-energy, flux transfer shunt trips used in molded case circuit breakers.

Trip Indication/Reset

A combination visual indicator and reset button is provided on the top of Type GFM2 and GFM4 devices to indicate the initiation of a tripping action to clear a Ground Fault. The operation of the internal relay will cause the white button to visibly raise.

To reset the device, the Indicator/ Reset button must be depressed. Failure to reset the device will not allow the associated disconnect device to be reclosed.

No Indicator/Reset button is provided on Types GFM2A or GFM4A since an internal SCR is used in the output circuit. These devices reset automatically when the disconnect opens to clear the Ground Fault.

Application

Type GFM devices may be installed in Zero Sequence or Ground Return Sensing methods, Proper Ground Fault Protection schemes are dependent upon proper system installation and grounding methods.

Mounting

Each Type GFM device contains a Ground Fault Sensor which is a special current transformer. These are insulated devices which can be mounted directly to enclosure surfaces. Four tubular rivets secure the sensor housing. These four (0.200 dia.) mounting holes can be used to mount the GFM device in either a vertical or horizontal mounting position.

Optional mounting brackets as shown on the next page are available. These brackets may be mounted on either the bottom or side depending upon the installation requirements.

Regardless of the mounting method used, the top of the device with the visual indicator/ reset button and nameplate instructions should be maintained in a visual position after installation. GFM devices should be installed so that all conductors passing through the conductor window are physically centered.

Ordering Information

Order by catalog number or style number:

1 Basic GFM Unit

1 Rating plug if required

1 Mounting bracket if required

1 Circuit breaker with standard shunt trip factory installed (as required), or optionally when possible, a circuit breaker and field mountable shunt trip as separate items.

Rating Plug Installation

To install an optional rating plug to obtain other than the minimum 5 ampere rating, remove the terminal cover held in position by a single screw and retention groove. With the cover removed, insert the rating plug in the position indicated. The rating plug is held captive in position with the addition of the terminal cover after the wiring is completed. With the terminal cover in position, the ampere rating of the rating plug remains visible.

Output Circuitry

Contact ratings for Type GFM2 and GFM4 are 10 amperes continuous, 240 volts Ac maximum. Types GFM2A and GFM4A are intended to be used only with remote flux transfer shunt trips.

Selection Data

GFM Basic Units

Output Type	Approximate Window Opening, Inches	Basic Ampere Rating (Plug Omitted)	Operating Time @ 10 x Ampere Rating	Catalog Number
Unit for Use with Standard Shunt Trip				
Relay	2	5	0.03 Seconds	**GFM2**
Relay	4	5	0.03 Seconds	**GFM4**
Unit for Use with Flux Transfer Shunt Trips				
SCR	2	5	0.03 Seconds	**GFM2A**
SCR	4	5	0.03 Seconds	**GFM4A**

Instruction Leaflet/FRED Number 14945

GFM Optional Rating Plugs

Ampere Rating	Catalog Number
10	**GFMP10**
25	**GFMP25**
50	**GFMP50**
50	**GFMP75**
100	**GFMP100**

Optional Mounting Brackets

Includes two (2) brackets and mounting hardware

GFM Type	Bracket Kit Style Number
GFM2/2A	**750B295G01**
GFM4/4A	**750B295G02**

Type GFR

Description

The GFR ground fault relays, current sensors, test panels and accessory devices are UL listed by Underwriters Laboratories, Inc. in accordance with their standard for Ground Fault Sensing and Relaying Equipment, UL 1053, under File E48381.①

A Type GFR ground fault protection system, when properly installed on a grounded electrical system, will sense phase-to-ground fault currents. When the level of fault current is in excess of the pre-selected current pickup and time delay settings, the GFR relay will initiate a trip action of a disconnect device, which will open the faulted circuit and clear the fault.

The GFR devices are UL Class I devices designed to protect electrical equipment against extensive damage from arcing ground faults.

A basic Type GFR ground fault protection system consists of a ground fault relay②, a ground fault current sensor and a disconnect device equipped with a shunt trip device. This disconnect device can be a molded case circuit breaker, a power circuit breaker, a bolted pressure switch or other fusible disconnect device, suitable for application with UL Class I Ground Fault Sensing and Relaying equipment.

Additional optional equipment can be added to the protection system to meet the requirements of the specifying engineer, including:

- Ground Fault Test Panel
- Ground Fault Warning Indicator Relay
- Ground Fault Indicating Ammeter

GFR relays are available with zone selective interlocking circuitry to interlock several relays within the same system. This allows the relay which detects a ground fault to instantly clear the fault by tripping the disconnect device. The relay simultaneously sends a signal to relay units "upstream" from the fault to time delay or to block their operation completely. Current sensors in various designs provide a range of "window" sizes to accommodate standard bus and cable arrangements.

Shunt trip attachments may be ordered for field mounting in Cutler-Hammer molded case circuit breakers, or may be ordered factory installed in the breaker.

① Suitable for either surface or semi-flush mounting.
② These devices are also listed with CSA under their file number 43357.

GFR Relay

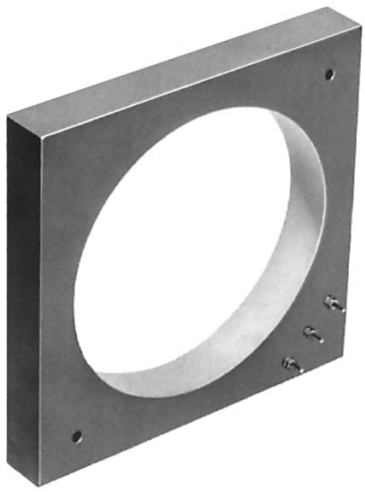

Typical Current Sensor

Electrical Ratings

GFR Relay

Ground Fault Detection Ranges:
1 to 12, 5 to 60 or 100 to 1200 Amperes

Output contacts:

240 Volt, 50/60 Hz:	3.0 Amperes
120 Volt, 50/60 Hz:	6.0 Amperes
28 Volt Dc:	3.0 Amperes
125 Volt Dc:	.5 Amperes

Control power requirements:
120 Volt, 50/60 Hz: .125 Amperes, or 125 Volt Dc (optional)

Sensor:
600 Volts, 50/60 Hz maximum system voltage

Ordering Information

Each installation requires:

1. One relay unit (select trip ampere as required)
2. One current sensor (select configuration required)
3. One circuit breaker or disconnect device with shunt trip, or a shunt trip attachment for mounting in existing breaker.
4. Test panel. (Optional)

GFR Relay

GFR Relay Types	Catalog Numbers①		
	Ground Fault Pickup Amperes		
	1-12	5-60	100-200
For 120 Volt 50/60 Hz Control			
Electrical Reset with Zone Interlocking	**GRF12EI**	**GFR60EI**	**GFR1200EI**
Electrical Reset without Zone Interlocking	**GRF12E**	**GFR60E**	**GFR1200E**
Mechanical Reset with Zone Interlocking	**GRF12MI**	**GFR60MI**	**GFR1200MI**
Mechanical Reset without Zone Interlocking	**GRF12MI**	**GFR60MI**	**GFR1200MI**
For 120 Volt Dc Control			
Electrical Reset with Zone Interlocking	**GRF12EID**	**GFR60EID**	**GFR1200EID**
Electrical Reset without Zone Interlocking	**GRF12ED**	**GFR60ED**	**GFR1200ED**
Mechanical Reset with Zone Interlocking	**GRF12MID**	**GFR60MID**	**GFR1200MID**
Mechanical Reset without Zone Interlocking	**GRF12MID**	**GFR60MID**	**GFR1200MID**

Current Sensor

Window Size	Style Number
Used with Relays Rated 1-12 Amperes	
5.50 In. I.D.	**1283C45G01**
Used with Relays Rated 5-60 Amperes	
2.50 In. I.D.	**179C768G01**
5.50 In. I.D.	**1256C13G01**
8.25 In. I.D.	**179C767G01**
7.81 x 11.00 In. Rect.②	**1257C88G04**
3.31 x 24.94 In. Rect.②	**1257C92G03**
Used with Relays Rated 100-1200 Amperes	
2.50 In. I.D.	**179C768G02**
5.50 In. I.D.	**1256C13G02**
8.25 In. I.D.	**179C767G02**
7.81 x 11.00 In. Rect.②	**1257C88G03**
9.94 x 16.94 In. Rect.②	**1257C90G02**
9.94 x 23.94 In. Rect.②	**1257C91G02**
15.94 x 19.94 In. Rect.②	**1257C89G02**
3.31 x 24.94 In. Rect.②	**1257C92G04**
6.75 x 29.64 In. Rect.②	**1255C39G03**

Instruction Leaflet/FRED Number 15321

① Suitable for either surface or semi-flush mounting.
② One end removable for installation.
③ When a mechanically reset relay is used with a test panel, both the relay and test panel must be reset following either a simulated ground fault test or actual ground fault.
④ Not UL listed.

Accessories

Test Panel (120 Volts Ac)③

Used to test the ground fault system, to give an indication the relay has tripped the breaker, and to reset the relay after tripping④. These functions may be separately mounted pilot devices.

Optional Test Panel

Control	Test	Catalog Number
120V 50/60 Hz	120V 50/60 Hz	**GFRTP**
125V Dc	120V 50/60 Hz	**GFRTPD**

Ground Fault Warning Indicator

This is an accessory item for use with GFR Relays with interlocking circuitry. At approximately 30-50% of the Relay pickup setting, the indicator switches separate 120 volt Ac control power to a lamp or relay, (not included) to give an indication of a ground fault. The indicator is rated 110/120 volts Ac 50/60 Hz for a maximum indicator load of .5 amperes.

Ground Fault Warning Indicator	Style Number
Manual Reset	**1234C67G01**
Self-Resetting	**1234C67G02**

Indicating Ammeter④

The optional indicating ammeter. It connects to the sensor terminals, through a momentary contact pushbutton, and will indicate (in amperes) any ground fault current flowing through the sensor. Kit includes the ammeter and pushbutton.

GFR System Used with	Kit Style Number
1-12 Ampere	**752B820G01**
5-60 Ampere	**752B820G02**
100-1200 Ampere	**752B820G03**

Shunt Trip Attachments

Use 120 volt Ac shunt trips.

Face Plate

Recommended when these relays are semi-flush mounted, to close the door cutout opening.

Description	Style Number
Face Plate	**752B410G01**

Alarm Switch

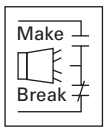

General Information

For remote indication of automatic trip operation. Does not function with manual switching; however, it will operate when either a shunt trip or undervoltage release is operated.

A "make" contact closes and a "break" contact opens when the alarm/lockout switch operates. The switch automatically resets when the circuit breaker is reset.

Ordering Information

G-Frame

Alarm Switch (RH only)①

Electrical Rating			Contact Arrangement	Style Number②③④	Factory Suffix
Volts	Frequency	Amperes			
Alarm Switch					
240	50/60 Hz	6	1 Make/ 1 Break	**1288C75G03**	**B3**
Alarm Switch Auxiliary Switches Combination					
240	50/60 Hz	6	1 Make/ 1 Break and 1a/1b	**1288C76G09**	**B13**

Instruction Leaflet/FRED Number 15552

F-Frame

Electrical Rating Data⑤⑥

Maximum Voltage	Frequency	Maximum Current Amperes	Dielectric Withstand Voltage
Multi-Pole Circuit Breakers			
600	50/60 Hz	6	2500
125	Dc	0.50⑦	2200
250	Dc	0.25⑦	2200
Single-Pole Circuit Breakers			
125/250	50/60 Hz	6⑦	2000
28	Dc	3⑦	2000
28	Dc	5⑧	2000

Alarm Switch①

Number of Contacts (Make and Break)	Mounting Location (Pole)	Factory Mounted				Field Mounted	
		Connection Type and Location				Field Installation Kits⑨	
		18-Inch Pigtail Leads			Terminal Block	Pigtail Leads	Terminal Block
		Same Side	Rear⑩	Opposite Side	Same Side		
		Suffix Number				Catalog Number	
1	Left⑪ Right	**B01** **B05**	**B02** **B06**	**B03** **B07**	**B04** **B08**	**A1L1LPK** **A1L1RPK**	**A1L1LTK** **A1L1RTK**
2	Left⑪ Right	**B09** **B12**	**B10** **B13**	– –	**B11** **B14**	**A2L1LPK** **A2L1RPK**	**A2L1LTK** **A2L1RTK**
1 (Make Only)	Single Pole	**B15⑫**	–	–	–	–	–

Instruction Leaflet/FRED Number 29C180

① F-Frame circuit breakers are factory sealed. Underwriters Laboratories, Inc., requires that internal accessories be installed at the factory. Internal accessories are UL listed for factory installation under E7819. Where local codes and standards permit and UL listing is not required, internal accessories can be field installed. Accessory installation should be done before the circuit breaker is mounted and connected.
② Includes 24-inch external pigtail leads,18 AWG (16-.010).
③ A maximum of two internal accessories may be mounted in a three-pole circuit breaker.
④ Suitable for mounting in right pole only of 2- or 3-pole breaker.
⑤ Endurance: 6000 electrical operations plus 4000 mechanical operations.
⑥ Endurance: 6000 electrical operations plus 2000 mechanical operations.
⑦ Non-inductive load.
⑧ Inductive (L/R = 0.026).
⑨ Not listed with Underwriters Laboratories, Inc., for field installation.
⑩ Standard pigtail lead exit location.
⑪ Standard mounting location.
⑫ Factory installation only. Leads exit load end of circuit breaker.

J-Frame

Electrical Rating Data①②

Maximum Voltage	Frequency	Maximum Current Amperes	Dielectric Withstand Voltage
600 125 250	50/60 Hz Dc Dc	6 0.50③ 0.25③	2500

Alarm Switch

Number of Contacts (Make and Break)	Mounting Location (Pole)	Factory Mounted				Field Mounted	
		Connection Type and Location				Field Installation Kits④	
		18-Inch Pigtail Leads			Terminal Block	Pigtail Leads	Terminal Block
		Same Side	Rear⑤	Opposite Side	Same Side		
		Suffix Number				Catalog Number	
1	Left⑥ Right	B01 B05	B02 B06	B03 B07	B04 B08	A1L2LPK A1L2RPK	A1L2LTK A1L2RTK⑦

Instruction Leaflet/FRED Number 29C181

K-Frame

Electrical Rating Data②⑧

Maximum Voltage	Frequency	Maximum Current Amperes	Dielectric Withstand Voltage
600 125 250	50/60 Hz Dc Dc	6 0.50③ 0.25③	2500

Alarm Switch

Number of Sets of Contacts (1M and 1B)	Mounting Location (Pole)	Factory Mounted				Field Mounted	
		Connection Type and Location				Field Installation Kits④	
		18-Inch Pigtail Leads			Terminal Block	Pigtail Leads	Terminal Block
		Same Side	Rear⑤	Opposite Side	Same Side		
		Suffix Number				Catalog Number	
1	Left⑥ Right	B01 B05	B02 B06	B03 B07	B04 B08	A1L3LPK A1L3RPK	A1L3LTK A1L3RTK
2	Left⑥ Right	B09 B12	B10 B13	– –	B11 B14	A2L3LPK A2L3RPK	A2L3LTK A2L3RTK

Instruction Leaflet/FRED Number 29C182

L- and M-Frames

Electrical Rating Data②⑧

Maximum Voltage	Frequency	Maximum Current Amperes	Dielectric Withstand Voltage
600 125 250	50/60 Hz Dc Dc	6 0.50③ 0.25③	2500

Alarm Switch

Number of Sets of Contacts (1M and 1B)	Mounting Location (Pole)	Factory Mounted				Field Mounted	
		Connection Type and Location				Field Installation Kits④	
		18-Inch Pigtail Leads			Terminal Block	Pigtail Leads	Terminal Block
		Same Side	Rear⑤	Opposite Side	Same Side		
		Suffix Number				Catalog Number	
1	Left⑥ Right	B01 B05	B02 B06	B03 B07	B04 B08	A1L4LPK A1L4RPK	A1L4LTK A1L4RTK
2	Left⑥ Right	B09 B12	B10 B13	– –	B11 B14	A2L4LPK A2L4RPK	A2L4LTK A2L4RTK

Instruction Leaflet/FRED Number 29C183

① Endurance: 6000 electrical operations plus 2000 mechanical operations.
② Pigtail wire size: No. 18 AWG (0.82 mm^2).
③ Non-inductive load.
④ Listed with Underwriters Laboratories, Inc., for field installation on interchangeable trip unit breakers under E64983.
⑤ Standard mounting location.
⑥ Standard mounting location – leads exit rear of breaker.
⑦ Not for use on 4-pole circuit breakers.
⑧ Endurance – 5,000 electrical operations plus 1000 mechanical operations.

N-Frame

Electrical Rating Data①

Maximum Voltage	Frequency	Maximum Current Amperes	Dielectric Withstand Voltage
600 125 250	50/60 Hz Dc Dc	6 0.50② 0.25②	2500

Alarm Switch

Number of Sets of Contacts (Make and Break)	Mounting Location (Pole)	Factory Mounted				Field Mounted	
		Connection Type and Location				Field Installation Kits③	
		18-Inch Pigtail Leads			Terminal Block	Pigtail Leads	Terminal Block
		Same Side	Rear④	Opposite Side	Same Side		
		Suffix Number				Catalog Number	
1	Left Right④	B01 B05	B02 B06	B03 B07	B04 B08	A1L5LPK A1L5RPK	A1L5LTK A1L5RTK
2	Left Right④	B09 B12	B10 B13	– –	B11 B14	A2L5LPK A2L5RPK	A2L5LTK A2L5RTK

Instruction Leaflet/FRED Number 29C184

R-Frame

Electrical Rating Data⑤⑥

Maximum Voltage	Frequency	Maximum Current Amperes
600 125 250	50/60 Hz Dc Dc	6 0.50② 0.25②

Alarm Switch (RH only)

Number of Contacts (Make and Break)	Factory Mounted	Field Mounted
	Connection Type and Location	Field Installation Kits③
	18-Inch Pigtail Leads	Pigtail Leads
	Suffix Number⑦	Catalog Number⑦
1	B05	A1L6RPK
2	B12	A2L6RPK

Instruction Leaflet/FRED Number 29C185

① Endurance – 3000 electrical operations plus 1000 mechanical operations.
② Non-inductive load.
③ Listed with Underwriters Laboratories, Inc. for field installation under E64983.
④ Standard mounting location – leads exit rear of breaker.
⑤ Endurance: 500 electrical operations plus 2500 mechanical operations.
⑥ Pigtail wire size: No. 18 AWG (0.82 mm^2). Leads are red, black and blue.
⑦ A maximum of three ASL plug-in modules may be installed in a circuit breaker.

Auxiliary Switch

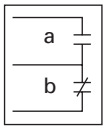

General Information

The auxiliary switch provides circuit breaker contact status information by monitoring the position of the molded cross bar which contains the moving contact arms. The auxiliary switch is used for remote indication and interlock system verification, and consists of one or two SPDT switches housed in a plug-in module. Each SPDT switch has one "a" and one "b" contact. When the circuit breaker contacts are open, the "a" contact is open and the "b" contact is closed.

Ordering Information

G-Frame

Auxiliary (RH only)

Electrical Ratings			Contact Arrangement	Style Number①②③	Factory Suffix
Volts	Frequency	Amperes			
240	50/60 Hz	6	1a/1b	**1288C74G03**	**A3**
240	50/60 Hz	6	2a/2b	**1288C73G03**	**A6**

Instruction Leaflet/FRED Number 15551

F-Frame

Electrical Rating Data④⑤

Maximum Voltage	Frequency	Maximum Current Amperes	Dielectric Withstand Voltage
125⑥	50/60 Hz	1	2500
600	50/60 Hz	6	2500
125	Dc	0.50⑦	2200
250	Dc	0.25⑦	2200

Auxiliary Switch

Number of Contacts a and b	Mounting Location (Pole)	Factory Mounted				Field Mounted	
		Connection Type and Location				Field Installation Kits⑧	
		18-Inch Pigtail Leads			Terminal Block	Pigtail Leads	Terminal Block
		Same Side	Rear⑨	Opposite Side	Same Side		
		Suffix Number				Catalog Number	
1	Left⑤	**A01**	**A02**	**A03**	**A04**	**A1X1PK**	**A1X1LTK**
		A15⑩	**A16⑩**	**A17⑩**	–	**E1X1PK**	–
	Right or Neutral	**A05**	**A06**	**A07**	**A08**	**A1X1PK**	**A1X1RTK⑬**
		A18⑩	**A19⑩**	**A20⑩**	–	–	–
2	Left⑤	**A09**	**A10**	–	**A11**	**A2X1LPK**	**A2X1LTK**
		A21⑩	**A22⑩**	–	–	**E2X1LPK**	–
	Right or Neutral	**A12**	**A13**	–	**A14**	**A2X1RPK**	**A2X1RTK⑬**
		A23⑩	**A24⑩**	–	–	**E2X1RPK**	–

Instruction Leaflet/FRED Number 29C120

J-Frame

Electrical Rating Data④⑤

Maximum Voltage	Frequency	Maximum Current Amperes	Dielectric Withstand Voltage
600	50/60 Hz	6	2500
125	Dc	0.50⑦	
250	Dc	0.25⑦	

Auxiliary Switch

Number of Sets of Contacts (1a and 1b)	Mounting Location (Pole)	Factory Mounted				Field Mounted	
		Connection Type and Location				Field Installation Kits⑪	
		18-Inch Pigtail Leads			Terminal Block	Pigtail Leads	Terminal Block
		Same Side	Rear⑫	Opposite Side	Same Side		
		Suffix Number				Catalog Number	
1	Left	**A01**	**A02**	**A03**	**A04**	**A1X2PK**	**A1X2LTK**
	Right⑫	**A05**	**A06**	**A07**	**A08**	**A1X2PK**	**A1X2RTK⑬**
2	Left	**A09**	**A10**	–	**A11**	**A2X2PK**	**A2X2LTK**
	Right⑫	**A12**	**A13**	–	**A14**	**A2X2PK**	**A2X2RTK⑬**

Instruction Leaflet/FRED Number 29C121

① Includes 24-inch external pigtail leads, #18 AWG (16-.010).
② A maximum of two internal accessories may be mounted in a three-pole circuit breaker.
③ Suitable for mounting in right pole only of 2- or 3-pole breaker.
④ Endurance: 6000 electrical operations plus 4000 mechanical operations.
⑤ Pigtail wire size: No. 18 AWG (0.82 mm^2).
⑥ For use in electronic circuit of 100 micro-amperes and 15 Vdc minimum.
⑦ Non-inductive load.
⑧ Not listed with Underwriters Laboratories, Inc., for field installation.
⑨ Standard pigtail lead exit location.
⑩ 125-volt (Max.), 50/60 Hz switch for use in electronic circuit of 100 micro-amp and 15 Vdc minimum.
⑪ Listed with Underwriters Laboratories, Inc. for field installation or interchangeable trip unit breakers under E64983.
⑫ Standard mounting location – leads exit rear of breaker.
⑬ Not for use on 4-pole circuit breakers.

K-Frame

Electrical Rating Data①②

Maximum Voltage	Frequency	Maximum Current Amperes	Dielectric Withstand Voltage
600 125 250	50/60 Hz Dc Dc	6 0.50③ 0.25③	2500

Auxiliary Switch

Number of Sets of Contacts (1M and 1B)	Mounting Location (Pole)	Factory Mounted				Field Mounted	
		Connection Type and Location				Field Installation Kits④	
		18-Inch Pigtail Leads			Terminal Block	Pigtail Leads	Terminal Block
		Same Side	Rear⑤	Opposite Side	Same Side		
		Suffix Number				Catalog Number	
1	Left Right⑤	A01 A05	A02 A06	A03 A07	A04 A08	A1X3PK A1X3PK	A1X3LTK A1X3RTK⑥
2	Left Right⑤	A09 A12	A10 A13	– –	A11 A14	A2X3PK A2X3PK	A2X3LTK A2X3RTK⑥
3	Left Right	A18 A17	– –	– –	A15 A16	A3X3LPK A3X3RPK	A3X3LTK A3X3RTK⑥

Instruction Leaflet/FRED Number 29C122

L- and M-Frames

Electrical Rating Data②

Maximum Voltage	Frequency	Maximum Current Amperes	Dielectric Withstand Voltage
600 125 250	50/60 Hz Dc Dc	6 0.50③ 0.25③	2500

Auxiliary Switch

Number of Sets of Contacts (1a and 1b)	Mounting Location (Pole)	Factory Mounted				Field Mounted	
		Connection Type and Location				Field Installation Kits④	
		18-Inch Pigtail Leads			Terminal Block	Pigtail Leads	Terminal Block
		Same Side	Rear⑤	Opposite Side	Same Side		
		Suffix Number				Catalog Number	
1	Left Right⑤	A01 A05	A02 A06	A03 A07	A04 A08	A1X4PK A1X4PK	A1X4LTK A1X4RTK⑥
2	Left Right⑤	A09 A12	A10 A13	– –	A11 A14	A2X4PK A2X4PK	A2X4LTK A2X4RTK⑥
3	Left Right⑤	A18 A17	– –	– –	A15 A16	A3X4PK A3X4PK	A3X4LTK A3X4RTK⑥

Instruction Leaflet/FRED Number 29C123

① Endurance – 5000 electrical operations plus 1000 mechanical operations.
② Pigtail wire size – No. 18 AWG (0.82 mm^2).
③ Non-inductive load.
④ Listed with Underwriters Laboratories, Inc. for field installation under E64983.
⑤ Standard mounting location – leads exit rear of breaker.
⑥ Not for use on 4-pole circuit breaker.

N-Frame

Electrical Rating Data①②

Maximum Voltage	Frequency	Maximum Current Amperes	Dielectric Withstand Voltage
600 125 250	50/60 Hz Dc Dc	6 0.50③ 0.25③	2500

Auxiliary Switch

Number of Sets of Contacts (1A and 1B)	Mounting Location (Pole)	Factory Mounted				Field Mounted	
		Connection Type and Location				Field Installation Kits④	
		18-Inch Pigtail Leads			Terminal Block	Pigtail Leads	Terminal Block
		Same Side	Rear⑤	Opposite Side	Same Side		
		Suffix Number				Catalog Number	
1	Left Right⑤	A01 A05	A02 A06	A03 A07	A04 A08	A1X5LPK A1X5RPK	A1X5LTK A1X5RTK⑥
2	Left Right⑤	A09 A12	A10 A13	– –	A11 A14	A2X5LPK A2X5RPK	A2X5LTK A2X5RTK⑥
3	Left Right⑤	A18 A17	– –	– –	A15 A16	A3X5LPK A3X5RPK	A3X5LTK A3X5RTK⑥

Instruction Leaflet/FRED Number 29C124

R-Frame

Electrical Rating Data⑦⑧

Maximum Voltage	Frequency	Maximum Current Amperes
600 125 250	50/60 Hz Dc Dc	6 0.50③ 0.25③

Auxiliary Switch (RH only)

Number of Contacts (Make and Break)	Factory Mounted	Field Mounted
	Connection Type and Location	Field Installation Kits④
	18-Inch Pigtail Leads	Pigtail Leads
	Suffix Number⑨	Catalog Number⑨
2	A12	A2X6RPK
4	A19	A4X6RPK

Instruction Leaflet/FRED Number 29C125

① Endurance – 3000 electrical operations plus 1000 mechanical operations.
② Pigtail wire size – No. 18 AWG (0.82 mm^2).
③ Non-inductive load.
④ Listed with Underwriters Laboratories, Inc. for field installation under E64983.
⑤ Standard mounting location – leads exit rear of breaker.
⑥ Not for use on 4-pole circuit breaker.
⑦ Endurance: 500 electrical operations plus 2500 mechanical operations.
⑧ Pigtail wire size: No. 18 AWG (0.82 mm^2). Leads are red, black and blue.
⑨ A maximum of two auxiliary switches (any combination of 2a/2b or 4a/4b plug-in modules may be installed in a circuit breaker.

Auxiliary Switch and Alarm Switch Combination

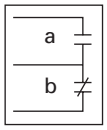

General Information

Each catalog number listed in the following table includes one auxiliary switch and one alarm switch. In an auxiliary switch ASL switch combination, the auxiliary switch is always mounted on the side of the plug-in module next to the center pole of the circuit breaker.

Ordering Information

F-Frame

Electrical Rating Data①②

Maximum Voltage	Frequency	Maximum Current Amperes	Dielectric Withstand Voltage
125	50/60 Hz	1	2500
600	50/60 Hz	6	2500
125	Dc	0.50③	2200
250	Dc	0.25③	2200

Auxiliary Switch and Alarm Switch Combination

Mounting Location (Pole)	Factory Mounted			Field Mounted	
	Connection Type and Location			Field Installation Kits④	
	18-Inch Pigtail Leads		Terminal Block	Pigtail Leads	Terminal Block
	Same Side	Rear⑤	Same Side		
	Suffix Number			Catalog Number	
Left⑤ Right	C01 C04	C02 C05	C03 C06	AAL1LPK AAL1RPK	AAL1LTK AAL1RTK⑥

Instruction Leaflet/FRED Number 29C180

J-Frame

Electrical Rating Data⑦②

Maximum Voltage	Frequency	Maximum Current Amperes	Dielectric Withstand Voltage
600	50/60 Hz	6	2500
125	Dc	0.50③	
250	Dc	0.25③	

Auxiliary Switch and Alarm Switch Combination

Number of Sets of Contacts (1a and 1b and 1M and 1B)	Mounting Location (Pole)	Factory Mounted				Field Mounted	
		Connection Type and Location				Field Installation Kits⑧	
		18-Inch Pigtail Leads			Terminal Block	Pigtail Leads	Terminal Block
		Same Side	Rear⑨	Opposite Side	Same Side		
		Suffix Number				Catalog Number	
1	Left Right⑨	C01 C04	C02 C05	– –	C03 C06	AAL2LPK AAL2RPK	AAL2LTK AAL2RTK⑥

Instruction Leaflet/FRED Number 29C181

K-Frame

Electrical Rating Data⑩②

Maximum Voltage	Frequency	Maximum Current Amperes	Dielectric Withstand Voltage
600	50/60 Hz	6	2500
125	Dc	0.50③	
250	Dc	0.25③	

Auxiliary Switch and Alarm Switch Combination

Number of Sets of Contacts (1a and 1b and 1M and 1B)	Mounting Location (Pole)	Factory Mounted				Field Mounted	
		Connection Type and Location				Field Installation Kits⑧	
		18-Inch Pigtail Leads			Terminal Block	Pigtail Leads	Terminal Block
		Same Side	Rear⑨	Opposite Side	Same Side		
		Suffix Number				Catalog Number	
1	Left Right⑨	C01 C04	C02 C05	– –	C03 C06	AAL3LPK AAL3RPK	AAL3LTK AAL3RTK

Instruction Leaflet/FRED Number 29C182

① Endurance: 6000 electrical operations plus 4000 mechanical operations.
② Pigtail wire size: No. 18 AWG (0.82 mm^2).
③ Non-inductive load.
④ Not listed with Underwriters Laboratories, Inc., for field installation.
⑤ Standard mounting location.
⑥ Not for use on 4-pole circuit breakers.
⑦ Endurance – 6000 electrical operations plus 2000 mechanical operations.
⑧ Listed with Underwriters Laboratories, Inc. for field installation or interchangeable trip unit breakers under E64983.
⑨ Standard mounting location – leads exit rear of breaker.
⑩ Endurance – 5000 electrical operations plus 1000 mechanical operations.

L- and M-Frames

Electrical Rating Data①②

Maximum Voltage	Frequency	Maximum Current Amperes	Dielectric Withstand Voltage
600 125 250	50/60 Hz Dc Dc	6 0.50③ 0.25③	2500

Auxiliary Switch and Alarm Switch Combination

Number of Sets of Contacts	Mounting Location (Pole)	Factory Mounted				Field Mounted	
		Connection Type and Location				Field Installation Kits④	
		18-Inch Pigtail Leads			Terminal Block	Pigtail Leads	Terminal Block
		Same Side	Rear⑤	Opposite Side	Same Side		
		Suffix Number				Catalog Number	
1A, 1B and 1 Make/ 1 Break	Left Right⑤	**C01** **C04**	**C02** **C05**	– –	**C03** **C06**	**AA114LPK** **AA114RPK**	**AA114LTK** **AA114RTK⑥**
2A, 2B and 1 Make/ 1 Break	Left Right⑤	**C07** **C10**	**C08** **C11**	– –	**C12** **C13**	**AA214LPK** **AA214RPK**	**AA214LTK** **AA214RTK⑥**
3A, 3B and 1 Make/ 1 Break	Left Right⑤	**C14** **C15**	– –	– –	– –	**AA314LPK** **AA314RPK**	– –

Instruction Leaflet/FRED Number 29C183

N-Frame

Electrical Rating Data⑦②

Maximum Voltage	Frequency	Maximum Current Amperes	Dielectric Withstand Voltage
600 125 250	50/60 Hz Dc Dc	6 0.50③ 0.25③	2500

Auxiliary Switch and Alarm Switch Combination

Number of Sets of Contacts	Mounting Location (Pole)	Factory Mounted				Field Mounted	
		Connection Type and Location				Field Installation Kits④	
		18-Inch Pigtail Leads			Terminal Block	Pigtail Leads	Terminal Block
		Same Side	Rear⑤	Opposite Side	Same Side		
		Suffix Number				Catalog Number	
1A, 1B and 1 Make/ 1 Break	Left Right⑤	**C01** **C04**	**C02** **C05**	– –	**C03** **C06**	**AA115LPK** **AA115RPK**	**AA115LTK** **AA115RTK⑥**
2A, 2B and 1 Make/ 1 Break	Left Right⑤	**C07** **C10**	**C08** **C11**	– –	**C12** **C13**	**AA215LPK** **AA215RPK**	**AA215LTK** **AA215RTK⑥**

Instruction Leaflet/FRED Number 29C184

① Endurance – 5000 electrical operations plus 1000 mechanical operations.
② Pigtail wire size – No. 18 AWG (0.82 mm^2).
③ Non-inductive load.
④ Listed with Underwriters Laboratories, Inc. for field installation under E64983.
⑤ Standard mounting location – leads exit rear of breaker.
⑥ Not for use on 4-pole circuit breaker.
⑦ Endurance – 3000 electrical operations plus 1000 mechanical operations.

Shunt Trip

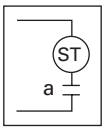

General Information

The shunt trip provides remote controlled tripping of the circuit breaker. The shunt trip consists of an intermittent rated solenoid with a tripping plunger and a cutoff switch assembled to a plug-in module.

When required for ground fault protection applications, certain Ac rated shunt trips, as noted in the Electrical Rating Table, are suitable for operation at 55 percent of rated voltage.

Ordering Information

Select shunt trip catalog number for the voltage within the indicated voltage range. Shunt trip coils are designed to be applied at specific Ac or Dc voltages within the voltage range shown. Electrical ratings are also shown on applicable circuit breaker accessory nameplates.

G-Frame

Shunt Trip (LH 3-Pole only)

Electrical Ratings			Catalog Number	Suffix Number
Volts	Frequency	Amperes		
120	50/60 Hz	1.1	**1373D62G01**	**S1**
240	50/60 Hz	2.1	**1373D62G02**	**S2**
12	Dc	2.8	**1373D62G15**	**S3**
24	Dc	5.7	**1373D62G16**	**S4**
24	60 Hz	–	**1373D62G20**	**S7**

Instruction Leaflet/FRED Number 15550

Note: G-Frame circuit breakers are factory sealed. Underwriters Laboratories, Inc., requires that internal accessories be installed at the factory.

Internal accessories are UL listed for factory installation under E7819.

Where local codes and standards permit and UL listing is not required, internal accessories can be field installed. Accessory installation should be done before the circuit breaker is mounted and connected.

F-Frame

Electrical Rating Data①②③

50/60 Hz			Dc		
Supply Voltage	Minimum Operating Voltage	VA	Supply Voltage	Minimum Operating Voltage	VA
12 24	6.75	75 300	12 24	9	100 400
48 60 110 120 127	36	92 140 480 570 640	48 60	36	100 160
208 220 240 380	156	180 200 240 610	110 120 125 127	77	55 66 71 72
415 440 480 525 550 600	300	130 330 380 450 530 590 –	220 250 – – – – –	– – – – – – –	110 140 – – – – –

Shunt Trip

Voltage Rating (Ac Frequency = 50/60 Hz)	Factory Mounted				Field Mounted	
	Connection Type and Location				Field Installation Kits④	
	18-Inch Pigtail Leads⑤			Terminal Block	Pigtail Leads	Terminal Block
	Same Side	Rear⑥	Opposite Side	Same Side		
	Suffix Number				Catalog Number	
Left-Pole Mounting Ac/Dc Ratings						
12-24 Vac or Vdc	S01	S02	S03	S04	SNT1LP03K	SNT1LT03K
48-127 Vac or 48-60 Vdc⑦	S05	S06	S07	S08	SNT1LP08K	SNT1LT08K
208-380 Vac or 110-127 Vdc	S09	S10	S11	S12	SNT1LP12K	SNT1LT12K
415-600 Vac or 220-250 Vdc	S13	S14	S15	S16	SNT1LP18K	SNT1LT18K
Right- or Neutral-Pole Mounting Ac/Dc Ratings⑧						
12-24 Vac or Vdc	S17	S18	S19	S20	SNT1RP03K	SNT1RT03K⑨
48-127 Vac or 48-60 Vdc⑦	S21	S22	S23	S24	SNT1RP08K	SNT1RT08K⑨
208-380 Vac or 110-127 Vdc	S25	S26	S27	S28	SNT1RP12K	SNT1RT12K⑨
415-600 Vac or 220-250 Vdc	S29	S30	S31	S32	SNT1RP18K	SNT1RT18K⑨

Instruction Leaflet/FRED Number 29C140

Note: F-Frame circuit breakers are factory sealed. Underwriters Laboratories, Inc., requires that internal accessories be installed at the factory.

Internal accessories are UL listed for factory installation under E7819.

Where local codes and standards permit and UL listing is not required, internal accessories can be field installed. Accessory installation should be done before the circuit breaker is mounted and connected.

J-Frame

Electrical Rating Data①②⑩

50/60 Hz			Dc		
Supply Voltage	Minimum Operating Voltage	VA	Supply Voltage	Minimum Operating Voltage	VA
12 24	9	31 173	12 24	8.4	50 247
48 60	36	686 1014	48 60	33.6	1094 1698
110⑪ 120⑪ 127⑪ 208⑪ 220⑪ 240⑪	60.5	66 84 102 354 396 432	110 120 125 – – –	77 – –	112 138 150 – – –
380 400 415 440	285	180 200 240 610	110 120 125 127	154	40 58 – –
480 525 550 600	360	34 42 50 60	– – – –	– – – –	– – – –

Shunt Trip

Voltage Rating (Ac Frequency = 50/60 Hz)	Factory Mounted				Field Mounted	
	Connection Type and Location				Field Installation Kits⑫	
	18-Inch Pigtail Leads			Terminal Block	Pigtail Leads	Terminal Block
	Same Side	Rear⑬	Opposite Side	Same Side		
	Suffix Number				Catalog Number	
Left-Pole Mounting Ac/Dc Ratings⑬						
12-24 Vac or Vdc	S41	S42	S43	S44	SNT2P04K	SNT2T04K
48-60 Vac or Vdc	S49	S50	S51	S52	SNT2P06K	SNT2T06K
110-240 Vac or 110-125 Vdc⑭	S09	S10	S11	S12	SN2LP11K	SNT2T11K
380-440 Vac or 220-250 Vdc	S33	S34	S35	S36	SNT2P14K	SNT2T14K
480-600 Vac	S17	S18	S19	S20	SNT2P18K	SNT2T18K
Right-Pole Mounting Ac/Dc Ratings						
12-24 Vac or Vdc	S45	S46	S47	S48	SNT2P04K	SNT2T04K⑨
48-60 Vac or Vdc	S53	S54	S55	S56	SNT2P06K	SNT2T06K⑨
110-240 Vac or 110-125 Vdc⑭	S29	S30	S31	S32	SNT2P11K	SNT2T11K⑨
380-440 Vac or 220-250 Vdc	S33	S34	S35	S36	SNT2P14K	SNT2T14K⑨
480-600 Vac	S37	S38	S39	S40	SNT2P18K	SNT2T18K⑨

Instruction Leaflet/FRED Number 29C142

① Average unlatching time: 6 milliseconds.
② Average circuit breaker contact total opening time: 18 milliseconds.
③ Endurance: 6000 electrical operations plus 4000 mechanical operations.
④ Not listed with Underwriters Laboratories, Inc., for field installation.
⑤ Pigtail wire size: No. 18 AWG (0.82 mm^2).
⑥ Standard pigtail lead exit location.
⑦ 120 Vac marked suitable for ground fault protection devices.
⑧ Standard mounting location.
⑨ Not for use on 4-pole circuit breakers.
⑩ Endurance – 6000 electrical operations plus 2000 mechanical operations.
⑪ Supply voltages suitable for use with Class 1 GFP devices. Marking label included with accessory kits.
⑫ Listed with Underwriters Laboratories, Inc. for field installation under E64983.
⑬ Standard mounting location – leads exit rear of breaker.
⑭ Suitable for use with Class 1 ground fault sensing element.

K-Frame

Electrical Rating Data①②③

50/60 Hz			Dc		
Supply Voltage	Minimum Operating Voltage	VA	Supply Voltage	Minimum Operating Voltage	VA
12	9	45	12	8.4	35
24		200	24		170
48		830	48		710
60		1280	60		1105
110④	60	100	110	77	110
120④		120	120		130
127④		140	125		140
208④		420	–	–	–
220④		470	–	–	–
240④		550	–	–	–
380	285	95	220	154	41
400		108	250		54
415		120	–		–
440		136	–		–
480	360	40	–	–	–
525		50	–	–	–
550		50	–	–	–
600		70	–	–	–

Shunt Trip

Voltage Rating (Ac Frequency = 50/60 Hz)	Factory Mounted				Field Mounted	
	Connection Type and Location				Field Installation Kits⑤	
	18-Inch Pigtail Leads			Terminal Block	Pigtail Leads	Terminal Block
	Same Side	Rear⑥	Opposite Side	Same Side		
	Suffix Number				Catalog Number	
Left-Pole Mounting Ac/Dc Ratings⑥						
12-24 Vac or Vdc	S41	S42	S43	S44	SNT3P04K	SNT3T04K
48-60 Vac or Vdc	S49	S50	S51	S52	SNT3P06K	SNT3T06K
110-240 Vac or 110-125 Vdc⑦	S09	S10	S11	S12	SN3LP11K	SNT3T11K
380-440 Vac or 220-250 Vdc	S13	S14	S15	S16	SNT3P14K	SNT3T14K
480-600 Vac	S17	S18	S19	S20	SNT3P18K	SNT3T18K
Right-Pole Mounting Ac/Dc Ratings⑧						
12-24 Vac or Vdc	S45	S46	S47	S48	SNT3P04K	SNT3T04K⑨
110-240 Vac or 110-125 Vdc⑦	S29	S30	S31	S32	SNT3P11K	SNT3T11K⑨
380-440 Vac or 220-250 Vdc	S33	S34	S35	S36	SNT3P14K	SNT3T14K⑨
480-600 Vac	S37	S38	S39	S40	SNT3P18K	SNT3T18K⑨

Instruction Leaflet/FRED Number 29C144

L- and M-Frames

Electrical Rating Data①②③

50/60 Hz			Dc		
Supply Voltage	Minimum Operating Voltage	VA	Supply Voltage	Minimum Operating Voltage	VA
12	9	45	12	9	35
24		200	24		170
48	34	830	48	34	710
60		1280	60		1105
110④	60	100	110	77	110
120④		120	120		130
127④		140	125		140
208④		420	–		–
220④		470	–	–	–
240④		550	–	–	–
380	266	95	220	154	41
400		108	250	–	54
415		120	–	–	–
440		136	–	–	–
480	336	40	–	–	–
525		50	–	–	–
550		50	–	–	–
600		70	–	–	–

Shunt Trip

Voltage Rating (Ac Frequency = 50/60 Hz)	Factory Mounted				Field Mounted	
	Connection Type and Location				Field Installation Kits⑤	
	18-Inch Pigtail Leads			Terminal Block	Pigtail Leads	Terminal Block
	Same Side	Rear⑥	Opposite Side	Same Side		
	Suffix Number				Catalog Number	
Left-Pole Mounting Ac/Dc Ratings⑥						
12-24 Vac or Vdc	S01	S02	S03	S04	SNT4LP03K	SNT4LT03K
48-60 Vac	S05	S06	S07	S08	SNT4LP05K	SNT4LT05K
48-60 Vdc	S85	S86	S87	–	SNT4LP23K	SNT4LT23K
110-240 Vac	S09	S10	S11	S12	SNT4LP11K	SNT4LT11K
110-125 Vdc	S41	S42	S43	S44	SNT4LP26K	SNT4LT26K
380-440 Vac or 220-250 Vdc	S13	S14	S15	S16	SNT4LP14K	SNT4LT14K
480-600 Vac	S17	S18	S19	S20	SNT4LP18K	SNT4LT18K
Right-Pole Mounting Ac/Dc Ratings⑩						
12-24 Vac or Vdc	S21	S22	S23	S24	SNT4RP03K	SNT4RT03K
48-60 Vac	S25	S26	S27	S28	SNT4RP05K	SNT4RT05K
48-60 Vdc	S88	S89	S90	–	SNT4RP23K	SNT4RT23K
110-240 Vac	S29	S30	S31	S32	SNT4RP11K	SNT4RT11K
110-125 Vdc	S45	S46	S47	S48	SNT4RP26K	SNT4RT26K
380-440 Vac or 220-250 Vdc	S33	S34	S35	S36	SNT4RP14K	SNT4RT14K
480-600 Vac	S37	S38	S39	S40	SNT4RP18K	SNT4RT18K

Instruction Leaflet/FRED Number 29C146

① Approximate unlatching time – 6 milliseconds.
② Approximate total circuit breaker contact opening time – 18 milliseconds.
③ Endurance – 5,000 electrical operations plus 1,000 mechanical operations.
④ Supply voltages suitable for use with Class 1 GFP devices. Marking label included with accessory kits.
⑤ Listed with Underwriters Laboratories, Inc., for field installation under E64983.
⑥ Standard mounting location – leads exit rear of breaker.
⑦ Suitable for use with Class 1 ground fault sensing element.
⑧ For use with KT (thermal-magnetic) trip units only.
⑨ Not for use on 4-pole circuit breaker.
⑩ For use with LT (thermal-magnetic) 3-pole trip units only.

N-Frame

Electrical Rating Data①②③

50/60 Hz			Dc		
Supply Voltage	Minimum Operating Voltage	VA	Supply Voltage	Minimum Operating Voltage	VA
24	16.8	200	24	16.8	170
48 60	33.6	830 1280	48 60	33.6	710 1150
110④ 120④ 127④ 208④ 220④ 240④	60	100 120 140 420 470 550	110 120 125 – – –	77 – – –	110 130 140 – – –
380 400 415 440	266	95 108 120 136	220 250 – –	154 – – –	41 54 – –
480 525 550 600	336	40 50 50 70	– – – –	– – – –	– – – –

Ordering Information

Shunt Trip

Voltage Rating (Ac Frequency = 50/60 Hz)	Factory Mounted				Field Mounted	
	Connection Type and Location				Field Installation Kits⑤	
	18-Inch Pigtail Leads			Terminal Block	Pigtail Leads	Terminal Block
	Same Side	Rear⑥	Opposite Side	Same Side		
	Suffix Number				Catalog Number	
Left-Pole Mounting Ac/Dc Ratings⑥						
24 Vac or Vdc	S01	S02	S03	S04	SNT5LP03K	SNT5LT03K
48-60 Vac	S05	S06	S07	S08	SNT5LP05K	SNT5LT05K
110-240 Vac④	S09	S10	S11	S12	SNT5LP11K	SNT5LT11K
110-125 Vdc	S41	S42	S43	S44	SNT5LP26K	SNT5LT26K
380-440 Vac or 220-250 Vdc	S13	S14	S15	S16	SNT5LP14K	SNT5LT14K
480-600 Vac	S17	S18	S19	S20	SNT5LP18K	SNT5LT18K
48-60 Vdc	S21	S22	S23	S24	SNT5LP23K	SNT5LT23K

Instruction Leaflet/FRED Number 29C148

① Approximate unlatching time – 6 milliseconds.
② Approximate total circuit breaker contact opening time – 18 milliseconds.
③ Endurance – 3000 electrical operations plus 1000 mechanical operations.
④ Supply voltages suitable for use with Class 1 GFP devices. Marking label included with accessory kits.
⑤ Listed with Underwriters Laboratories, Inc. for field installation under E64983.
⑥ Standard mounting location – leads exit rear of breaker.

R-Frame

Electrical Rating Data

Suffix Number	Application Ratings		Electrical Operating Ratings①②③④⑤⑥						
	Voltage (V)	Frequency (Hz)	Supply Voltage (V)	Minimum Operating Voltage (V)	I_p (A)	I_{rms} at 0.250s (A)	I_{rms} at 0.033s (A)	VA	One Minute Dielectric Withstand Voltage (V)
03/03K	24	50/60	24	16.8	71.1	–	50.3	1210	1050
	24	Dc	24	16.8	–	36.1	–	870	1050
05/05K	48-60	50/60	48 60	34.0	13.1 17.2	–	9.2 12.2	450 740	1120
11/11K⑦	110-240	50/60	110 120 127 208 220 240	60.5	4.2 4.5 4.6 7.9 8.5 8.7	–	3.0 3.2 3.3 5.6 6.0 6.1	330 390 430 1170 1370 1470	1480
14/14K	380-440	50/60	380 415 440	266.0	4.5 5.0 5.3	–	3.2 3.6 3.7	1220 1500 1640	1880
	220-250	Dc	220 250	154.0	–	2.4 2.7	–	530 680	1500
18/18K	480-600	50/60	480 525 550 600	336.0	0.6 0.7 0.7 0.8	–	0.4 0.5 0.5 0.6	200 270 280 360	2200
23/23K	48-60	Dc	48 60	34.0	–	9.8 11.6	–	470 700	1120
26/26K	110-125	Dc	110 120 125	77.0	–	3.3 3.6 3.8	–	370 440 480	1250

Shunt Trip (RH only)

Voltage Rating (Ac Frequency = 50/60 Hz)	Factory Mounted	Field Mounted
	Connection Type and Location	Field Installation Kits⑧
	18-Inch Pigtail Leads⑨	Pigtail Leads
	Suffix Number⑨	Catalog Number⑨
24 Vac or Vdc	**S21**	**SNT6P03K**
48-60 Vac	**S25**	**SNT6P05K**
110-240 Vac	**S29**	**SNT6P11K**
380-440 Vac or 220-250 Vdc	**S33**	**SNT6P14K**
480-600 Vac	**S37**	**SNT6P18K**
48-60 Vdc	**S88**	**SNT6P23K**
110-125 Vdc	**S45**	**SNT6P26K**

Instruction Leaflet/FRED Number 29C150

① Approximate unlatching time of 6 milliseconds.
② Average circuit breaker contact total opening time approximately 62 milliseconds, at rated voltage.
③ Endurance – 500 electrical operations and 2500 mechanical operations.
④ Shunt trip can be operated up to a maximum of six times per minute.
⑤ Maximum operating voltage – 110% of maximum voltage range rating.
⑥ Pigtail wire size – No. 18 AWG (0.82 mm^2). Leads are yellow and white.
⑦ Suitable for use with Class 1 GFP devices; marking label supplied with accessory kit.
⑧ Listed with Underwriters Laboratories, Inc. for field installation under E64983.
⑨ A maximum of two shunt trip plug-in modules may be installed in a circuit breaker.

Low Energy Shunt Trip

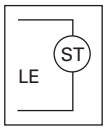

General Information

Low energy shunt trip devices are designed to operate from low energy output signals from dedicated current sensors typically applied in ground fault protection schemes. However, with a proper control voltage source, they may be applied in place of conventional trip devices for special applications. Flux paths surrounding permanent magnets used in the shunt trip assembly hold a charged spring poised in readiness to operate the circuit breaker trip mechanism. When a 100 microfarad capacitor charged to 28 Vdc is discharged through the shunt trip coil, the resultant flux opposes the permanent magnet flux field, which releases the stored energy in the spring to trip the circuit breaker. As the circuit breaker resets, the shunt trip reset arm is actuated by the circuit breaker handle, resetting the shunt trip. The plug-in module is mounted in retaining slots in the top of the trip unit. Coil is intermittent-rated only. Cutoff provisions required in control circuit.

Ordering Information

Select shunt trip catalog number for the voltage within the indicated voltage range. Shunt trip coils are designed to be applied at specific Ac or Dc voltages within the voltage range shown. Electrical ratings are also shown on applicable circuit breaker accessory nameplates.

F-, J-, K-, L-, M-, N-, and R-Frames

Low Energy Shunt Trip①

Mounting Positions	Factory Mounted				Field Mounted	
	Connection Type and Location				Field Installation Kits②	
	18-Inch Pigtail Leads			Terminal Block	Pigtail Leads	Terminal Block
	Same Side	Rear③	Opposite Side	Same Side		
	Suffix Numbers				Catalog Numbers	
F-Frame						
Left Pole	N01	N02	N03	N04	LST1LPK	LST1LTK
Right Pole③	N05	N06	N07	N08	LST1RPK	LST1RTK
Instruction Leaflet/FRED Number 29C141						
J-Frame						
Left Pole③	N01	N02	N03	–	LST2LPK	–
Right Pole	N05	N06	N07	–	LST2RPK	–
Instruction Leaflet/FRED Number 29C143						
K-Frame						
Left Pole③	N01	N02	N03	–	LST3LPK	–
Right Pole④	N05	N06	N07	–	LST3RPK	–
Instruction Leaflet/FRED Number 29C145						
L- and M-Frames						
Left Pole③	N01	N02	N03	–	LST4LPK	–
Right Pole④	N05	N06	N07	–	LST4RPK	–
Instruction Leaflet/FRED Number 29C147						
N-Frame						
Left Pole③	N01	N02	N03	–	LST5LPK	–
Instruction Leaflet/FRED Number 29C149						
R-Frame						
Right Pole	N01	–	–	–	LST6RPK	–
Instruction Leaflet/FRED Number 29C151						

① Cutoff provisions required in control circuit.
② Listed with Underwriters Laboratories, Inc. for field installation under E64983.
③ Standard mounting location – leads exit rear of breaker.
④ For use with thermal-magnetic trip units only.

Undervoltage Release Mechanism

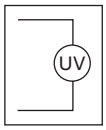

General Information

The undervoltage release mechanism monitors a voltage (typically a line voltage) and trips the circuit breaker when the voltage falls to between 70 and 35 percent of the solenoid coil rating.

The undervoltage release mechanism consists of a continuous rated solenoid with a plunger and tripping lever mounted in a plug-in module. The tab on the tripping lever resets the undervoltage release mechanism when normal voltage has been restored and the circuit breaker handle is moved to the reset (or OFF) position. With less than pickup voltage applied to the undervoltage release mechanism, the circuit breaker contacts will not touch when a closing operation is attempted.

Note: Undervoltage release mechanism accessories are not designed for, and should not be used as, circuit interlocks.

Ordering Information

Select handle reset undervoltage release mechanism catalog number for the voltage within the indicated voltage range. Undervoltage release mechanism coils are designed to be applied at specific Ac or Dc voltages within the voltage range shown. Electrical ratings are shown on applicable circuit breaker accessory nameplates.

G-Frame

Undervoltage Release Mechanism (LH 3-Pole only)

Electrical Ratings			Style Numbers ①②③	Factory Suffix
Volts	Frequency	Amperes		
120	50/60 Hz	0.05	**1373D62G03**	**T1**
24	50/60 Hz	0.22	**1373D62G04**	**T2**
48	50/60 Hz	0.11	**1373D62G05**	**T3**
60	50/60 Hz	0.10	**1373D62G06**	**T4**
110	50 Hz	0.049	**1373D62G07**	**T5**
208	60 Hz	0.026	**1373D62G08**	**T6**
220	50 Hz	0.025	**1373D62G09**	**T7**
240	50/60 Hz	0.024	**1373D62G10**	**T8**
380	50 Hz	0.015	**1373D62G11**	**T9**
415	50 Hz	0.013	**1373D62G12**	**T10**
440	50 Hz	0.012	**1373D62G13**	**T11**
480	60 Hz	0.01	**1373D62G14**	**T12**

Instruction Leaflet/FRED Number 15553

Note: G-frame circuit breakers are factory sealed. Underwriters Laboratories, Inc., requires that internal accessories be installed at the factory.

Internal accessories are UL listed for factory installation under E7819.

Where local codes and standards permit and UL listing is not required, internal accessories can be field installed. Accessory installation should be done before the circuit breaker is mounted and connected.

① Includes 24 inch external pigtail leads, #18 AWG (16-.010).
② A maximum of two internal accessories may be mounted in a three-pole circuit breaker.
③ Suitable for mounting in left pole only of 3-pole breaker.

F-Frame

Note: F-frame circuit breakers are factory sealed. Underwriters Laboratories, Inc., requires that internal accessories be installed at the factory.

Internal accessories are UL listed for factory installation under E7819.

Where local codes and standards permit and UL listing is not required, internal accessories can be field installed. Accessory installation should be done before the circuit breaker is mounted and connected.

Electrical Rating Data①

50/60 Hz					Dc				
Supply Voltage	Dropout Voltage		Pickup Voltage	VA	Supply Voltage	Dropout Voltage		Pickup Voltage	VA
	Min.	Max.	Max.			Min.	Max.	Max.	
12	4.2	6.3	7.6	1.3 2.5	12	4.2	8.4	10.2	2.8
24	8.4	16.8	20.4	1.4	24	8.4	16.8	20.4	1.6
48 60	21.0	33.6	40.8	1.2 1.9	48 60	21.0	33.6	40.8	1.3 2.0
110 120 127	44.5	77.0	93.5	1.3 1.5 1.7	110 120 125	44.5	77.0	93.5	1.5 1.7 1.9
208 220 240	84.0	145.6	176.8	2.2 2.4 2.9	220 250 –	87.5 –	154.0 –	187.0 –	2.6 3.4 –
380 415 440 480	168.0	266.0	323.0	2.9 3.5 3.9 4.6	– – –	– – –	– – –	– – –	– – –
525 550 600	210.0	367.0	446.0	4.3 4.8 5.8	– – –	– – –	– – –	– – –	– – –

Undervoltage Release Mechanism

Voltage Rating (Ac Freq = 50/60 Hz)	Factory Mounted (For F-Frame Breaker and F-Frame HMCP)				Field Mounted (F-Frame Breaker)		Field Mounted (F-Frame Breaker HMCP)	
	Connection Type and Location				Field Installation Kits②			
	18-inch Pigtail Leads			Terminal Block	Pigtail Leads	Terminal Block	Pigtail Leads	Terminal Block
	Same Side	Rear③	Opposite Side	Same Side				
	Suffix Numbers				Catalog Numbers			
Left-Pole Mounting Ac Ratings								
12 Vac	U01	U02	U03	U04	UVH1LP02K	UVH1LT02K	MUVH1LP02K	MUVH1LT02K
24 Vac	U05	U06	U07	U08	UVH1LP03K	UVH1LT03K	MUVH1LP03K	MUVH1LT03K
48 Vac	U37	U38	U39	U40	UVH1LP22K	UVH1LT22K	MUVH1LP22K	MUVH1LT22K
60 Vac	U97	U98	U99	U100	UVH1LP24K	UVH1LT24K	MUVH1LP24K	MUVH1LT24K
110-127 Vac	U13	U14	U15	U16	UVH1LP08K	UVH1LT08K	MUVH1LP08K	MUVH1LT08K
208-240 Vac	U17	U18	U19	U20	UVH1LP11K	UVH1LT11K	MUVH1LP11K	MUVH1LT11K
380-480 Vac	U21	U22	U23	U24	UVH1LP15K	UVH1LT15K	MUVH1LP15K	MUVH1LT15K
525-600 Vac	U25	U26	U27	U28	UVH1LP18K	UVH1LT18K	MUVH1LP18K	MUVH1LT18K
Right-Pole Mounting Ac Ratings④⑤								
12 Vac	U49	U50	U51	U52	UVH1RP02K	UVH1RT02K	MUVH1RP02K	MUVH1RT02K
24 Vac	U53	U54	U55	U56	UVH1RP03K	UVH1RT03K	MUVH1RP03K	MUVH1RT03K
48 Vac	U85	U86	U87	U88	UVH1RP22K	UVH1RT22K	MUVH1RP22K	MUVH1RT22K
60 Vac	U101	U102	U103	U104	UVH1RP24K	UVH1RT24K	MUVH1RP24K	MUVH1RT24K
110-127 Vac	U61	U62	U63	U64	UVH1RP08K	UVH1RT08K	MUVH1RP08K	MUVH1RT08K
208-240 Vac	U65	U66	U67	U68	UVH1RP11K	UVH1RT11K	MUVH1RP11K	MUVH1RT11K
380-480 Vac	U69	U70	U71	U72	UVH1RP15K	UVH1RT15K	MUVH1RP15K	MUVH1RT15K
525-600 Vac	U73	U74	U75	U76	UVH1RP18K	UVH1RT18K	MUVH1RP18K	MUVH1RT18K
Left-Pole Mounting Dc Ratings								
12 Vdc	U29	U30	U31	U32	UVH1LP20K	UVH1LT20K	MUVH1LP20K	MUVH1LT20K
24 Vdc	U33	U34	U35	U36	UVH1LP21K	UVH1LT21K	MUVH1LP21K	MUVH1LT21K
48 Vdc	U37	U38	U39	U40	UVH1LP22K	UVH1LT22K	MUVH1LP22K	MUVH1LT22K
60 Vdc	U97	U98	U99	U100	UVH1LP24K	UVH1LT24K	MUVH1LP24K	MUVH1LT24K
110-127 Vdc	U41	U42	U43	U44	UVH1LP26K	UVH1LT26K	MUVH1LP26K	MUVH1LT26K
220-250 Vdc	U45	U46	U47	U48	UVH1LP28K	UVH1LT28K	MUVH1LP28K	MUVH1LT28K
Right-Pole Mounting Dc Ratings④⑤								
12 Vdc	U77	U78	U79	U80	UVH1RP20K	UVH1RT20K	MUVH1RP20K	MUVH1RT20K
24 Vdc	U81	U82	U83	U84	UVH1RP21K	UVH1RT21K	MUVH1RP21K	MUVH1RT21K
48 Vdc	U85	U86	U87	U88	UVH1RP22K	UVH1RT22K	MUVH1RP22K	MUVH1RT22K
60 Vdc	U101	U102	U103	U104	UVH1RP22K	UVH1RT22K	MUVH1RP22K	MUVH1RT22K
110-127 Vdc	U89	U90	U91	U92	UVH1RP26K	UVH1RT26K	MUVH1RP26K	MUVH1RT26K
220-250 Vdc	U93	U94	U95	U96	UVH1RP28K	UVH1RT28K	MUVH1RP28K	MUVH1RT28K

Instruction Leaflet/FRED Number 29C160 and 29C179 (HMCP)

① Endurance: 6000 electrical operations plus 4000 mechanical operations.

② Not listed with Underwriters Laboratories, Inc., for field installation.

③ Standard pigtail lead exit location.

④ Standard mounting location.

⑤ Not for use on right pole of 4-pole circuit breaker.

J-Frame

Electrical Rating Data ①②

50/60 Hz					Dc				
Supply Voltage	Dropout Voltage		Pickup Voltage	VA	Supply Voltage	Dropout Voltage		Pickup Voltage	VA
	Min.	Max.	Max.			Min.	Max.	Max.	
12	4.2	8.4	10.2	1.9	12	4.2	8.4	10.2	1.6
24	8.4	16.8	20.4	3.9	24	8.4	16.8	20.4	3.1
48 60	21.0	33.6	40.8	2.5 3.8	48 60	21.0	33.6	40.8	2.0 3.1
110 120 127	44.5	77.0	93.5	1.8 2.1 2.4	110 120 125	44.5	77.0	93.5	1.6 1.9 2.2
208 220 240	85.0	145.6	176.8	2.7 3.1 3.8	220 250 –	87.5 –	154.0 –	187.0 –	3.1 4.0 –
380 415 440 480	168.0	266.0	323.0	3.4 4.0 4.6 5.4	– – –	– – –	– – –	– – –	– – –

Undervoltage Release Mechanism

Voltage Rating (Ac Freq = 50/60 Hz)	Factory Mounted				Field Mounted	
	Connection Type and Location				Field Installation Kits③	
	18-inch Pigtail Leads			Terminal Block②	Pigtail Leads	Terminal Block④
	Same Side	Rear③	Opposite Side	Same Side		
	Suffix Numbers				Catalog Numbers	
Left-Pole Mounting Ac Ratings⑤						
12 Vac	U05	U06	U07	U08	UVH2LP02K	UVH2LT02K
24 Vac	U09	U10	U11	U12	UVH2LP03K	UVH2LT03K
48-60 Vac	U13	U14	U15	U16	UVH2LP05K	UVH2LT05K
110-127 Vac	U17	U18	U19	U20	UVH2LP08K	UVH2LT08K
208-240 Vac	U21	U22	U23	U24	UVH2LP11K	UVH2LT11K
380-480 Vac	U25	U26	U27	U28	UVH2LP15K	UVH2LT15K
Right-Pole Mounting Ac Ratings④						
12 Vac	U37	U38	U39	U40	UVH2RP02K	UVH2RT02K
24 Vac	U41	U42	U43	U44	UVH2RP03K	UVH2RT03K
48-60 Vac	U45	U46	U47	U48	UVH2RP05K	UVH2RT05K
110-127 Vac	U49	U50	U51	U52	UVH2RP08K	UVH2RT08K
208-240 Vac	U53	U54	U55	U56	UVH2RP11K	UVH2RT11K
380-480 Vac	U57	U58	U59	U60	UVH2RP15K	UVH2RT15K
Left-Pole Mounting Dc Ratings⑤						
12 Vdc	T01	T02	T03	T04	UVH2LP20K	UVH2LT20K
24 Vdc	T05	T06	T07	T08	UVH2LP21K	UVH2LT21K
48-60 Vdc	T09	U10	T11	T12	UVH2LP23K	UVH2LT23K
110-127 Vdc	T13	T14	T15	T16	UVH2LP26K	UVH2LT26K
220-250 Vdc	T17	T18	T19	T20	UVH2LP28K	UVH2LT28K
Right-Pole Mounting Dc Ratings④						
12 Vdc	T21	T22	T23	T24	UVH2RP20K	UVH2RT20K
24 Vdc	T25	T26	T27	T28	UVH2RP21K	UVH2RT21K
48-60 Vdc	T29	T30	T31	T32	UVH2RP23K	UVH2RT23K
110-127 Vdc	T33	T34	T35	T36	UVH2RP26K	UVH2RT26K
220-250 Vdc	T37	T38	T39	T40	UVH2RP28K	UVH2RT28K

Instruction Leaflet/FRED Number 29C163

① Endurance: 6000 electrical operations plus 2000 mechanical operations.
② For electrical rating data for manual, automatic and electrical reset undervoltage release mechanisms, refer to Cutler-Hammer.
③ Listed with Underwriters Laboratories, Inc. for field installation under E64983.
④ Not for use on right pole of 4-pole circuit breakers.
⑤ Standard mounting location – leads exit rear of breaker.

K-Frame

Electrical Rating Data ①

50/60 Hz					Dc				
Supply Voltage	Dropout Voltage		Pickup Voltage	VA	Supply Voltage	Dropout Voltage		Pickup Voltage	VA
	Min.	Max.	Max.			Min.	Max.	Max.	
12	4.2	8.4	10.2	1.9	12	4.2	8.4	10.2	1.6
24	8.4	16.8	20.4	3.9	24	8.4	16.8	20.4	3.1
48 60	21.0	33.6	40.8	2.5 3.8	48 60	21.0	33.6	40.8	2.0 3.1
110 120 127	44.5	77.0	93.5	1.8 2.1 2.4	110 120 125	44.5	77.0	93.5	1.6 1.9 2.2
208 220 240	85.0	145.6	176.8	2.7 3.1 3.8	220 250 –	87.5 –	154.0 –	187.0 –	3.1 4.0 –
380 415 440 480	168.0	266.0	323.0	3.4 4.0 4.6 5.4	– – –	– – –	– – –	– – –	– – –

Undervoltage Release Mechanism

Voltage Rating (Ac Freq = 50/60 Hz)	Factory Mounted				Field Mounted	
	Connection Type and Location				Field Installation Kits②	
	18-inch Pigtail Leads			Terminal Block	Pigtail Leads	Terminal Block
	Same Side	Rear③	Opposite Side	Same Side		
	Suffix Numbers				Catalog Numbers	
Left-Pole Mounting Ac Ratings③						
12 Vac	U05	U06	U07	U08	UVH3LP02K	UVH3LT02K
24 Vac	U09	U10	U11	U12	UVH3LP03K	UVH3LT03K
48-60 Vac	U13	U14	U15	U16	UVH3LP05K	UVH3LT05K
110-127 Vac	U17	U18	U19	U20	UVH3LP08K	UVH3LT08K
208-240 Vac	U21	U22	U23	U24	UVH3LP11K	UVH3LT11K
380-480 Vac	U25	U26	U27	U28	UVH3LP15K	UVH3LT15K
Right-Pole Mounting Ac Ratings④⑤						
12 Vac	U37	U38	U39	U40	UVH3RP02K	UVH3RT02K
24 Vac	U41	U42	U43	U44	UVH3RP03K	UVH3RT03K
48-60 Vac	U45	U46	U47	U48	UVH3RP05K	UVH3RT05K
110-127 Vac	U49	U50	U51	U52	UVH3RP08K	UVH3RT08K
208-240 Vac	U53	U54	U55	U56	UVH3RP11K	UVH3RT11K
380-480 Vac	U57	U58	U59	U60	UVH3RP15K	UVH3RT15K
Left-Pole Mounting Dc Ratings③						
12 Vdc	T01	T02	T03	T04	UVH3LP20K	UVH3LT20K
24 Vdc	T05	T06	T07	T08	UVH3LP21K	UVH3LT21K
48-60 Vdc	T09	T10	T11	T12	UVH3LP23K	UVH3LT23K
110-127 Vdc	T13	T14	T15	T16	UVH3LP26K	UVH3LT26K
220-250 Vdc	T17	T18	T19	T20	UVH3LP28K	UVH3LT28K
Right-Pole Mounting Dc Ratings④⑤						
12 Vdc	T21	T22	T23	T24	UVH3RP20K	UVH3RT20K
24 Vdc	T25	T26	T27	T28	UVH3RP21K	UVH3RT21K
48-60 Vdc	T29	T30	T31	T32	UVH3RP23K	UVH3RT23K
110-127 Vdc	T33	T34	T35	T36	UVH3RP26K	UVH3RT26K
220-250 Vdc	T37	T38	T39	T40	UVH3RP28K	UVH3RT28K

Instruction Leaflet/FRED Number 29C166

① Endurance: 5,000 electrical operations plus 1,000 mechanical operations
② Listed with Underwriters Laboratories, Inc., for field installation under E64983.
③ Standard mounting location — leads exit rear of breaker.
④ For use with KT (thermal-magnetic) trip units only.
⑤ Not for use on right pole of 4-pole circuit breaker.

L- and M-Frames

Electrical Rating Data ①

50/60 Hz					Dc				
Supply Voltage	Dropout Voltage		Pickup Voltage	VA	Supply Voltage	Dropout Voltage		Pickup Voltage	VA
	Min.	Max.	Max.			Min.	Max.	Max.	
12	4.2	8.4	10.2	1.9	12	4.2	8.4	10.2	1.6
24	8.4	16.8	20.4	3.9	24	8.4	16.8	20.4	3.1
48 60	21.0	33.6	40.8	2.5 3.8	48 60	21.0	33.6	40.8	2.0 3.1
110 120 127	44.5	77.0	93.5	1.8 2.1 2.4	110 120 125	44.5	77.0	93.5	1.6 1.9 2.2
208 220 240	85.0	145.6	176.8	2.7 3.1 3.8	220 250 –	87.5 – –	154.0 – –	187.0 – –	3.1 4.0 –
380 415 440 480	168.0	266.0	323.0	3.4 4.0 4.6 5.4	– – –	– – –	– – –	– – –	– – –

Undervoltage Release Mechanism

Voltage Rating (Ac Freq = 50/60 Hz)	Factory Mounted				Field Mounted	
	Connection Type and Location				Field Installation Kits②	
	18-inch Pigtail Leads			Terminal Block	Pigtail Leads	Terminal Block
	Same Side	Rear③	Opposite Side	Same Side		
	Suffix Numbers				Catalog Numbers	
Left-Pole Mounting Ac Ratings③						
12 Vac	U05	U06	U07	U08	UVH4LP02K	UVH4LT02K
24 Vac	U09	U10	U11	U12	UVH4LP03K	UVH4LT03K
48-60 Vac	U13	U14	U15	U16	UVH4LP05K	UVH4LT05K
110-127 Vac	U17	U18	U19	U20	UVH4LP08K	UVH4LT08K
208-240 Vac	U21	U22	U23	U24	UVH4LP11K	UVH4LT11K
380-480 Vac	U25	U26	U27	U28	UVH4LP15K	UVH4LT15K
Right-Pole Mounting Ac Ratings④⑤						
12 Vac	U37	U38	U39	U40	UVH4RP02K	UVH4RT02K
24 Vac	U41	U42	U43	U44	UVH4RP03K	UVH4RT03K
48-60 Vac	U45	U46	U47	U48	UVH4RP05K	UVH4RT05K
110-127 Vac	U49	U50	U51	U52	UVH4RP08K	UVH4RT08K
208-240 Vac	U53	U54	U55	U56	UVH4RP11K	UVH4RT11K
380-480 Vac	U57	U58	U59	U60	UVH4RP15K	UVH4RT15K
Left-Pole Mounting Dc Ratings③						
12 Vdc	T01	T02	T03	T04	UVH4LP20K	UVH4LT20K
24 Vdc	T05	T06	T07	T08	UVH4LP21K	UVH4LT21K
48-60 Vdc	T09	T10	T11	T12	UVH4LP23K	UVH4LT23K
110-127 Vdc	T13	T14	T15	T16	UVH4LP26K	UVH4LT26K
220-250 Vdc	T17	T18	T19	T20	UVH4LP28K	UVH4LT28K
Right-Pole Mounting Dc Ratings④⑤						
12 Vdc	T21	T22	T23	T24	UVH4RP20K	UVH4RT20K
24 Vdc	T25	T26	T27	T28	UVH4RP21K	UVH4RT21K
48-60 Vdc	T29	T30	T31	T32	UVH4RP23K	UVH4RT23K
110-127 Vdc	T33	T34	T35	T36	UVH4RP26K	UVH4RT26K
220-250 Vdc	T37	T38	T39	T40	UVH4RP28K	UVH4RT28K

Instruction Leaflet/FRED Number 29C170

① Endurance: 5000 electrical operations plus 1000 mechanical operations
② Listed with Underwriters Laboratories, Inc. for field installation under E64983.
③ Standard mounting location — leads exit rear of breaker.
④ For use with LT (thermal-magnetic) trip units only.
⑤ Not for use on right pole of 4-pole circuit breaker.

N-Frame

Electrical Rating Data ①

50/60 Hz					Dc				
Supply Voltage	Dropout Voltage		Pickup Voltage	VA	Supply Voltage	Dropout Voltage		Pickup Voltage	VA
	Min.	Max.	Max.			Min.	Max.	Max.	
12	4.2	8.4	10.2	1.9	12	4.2	8.4	10.2	1.6
24	8.4	16.8	20.4	3.9	24	8.4	16.8	20.4	3.1
48 60	21.0	33.6	40.8	2.5 3.8	48 60	21.0	33.6	40.8	2.0 3.1
110 120 127	44.5	77.0	93.5	1.8 2.1 2.4	110 120 125	44.5	77.0	93.5	1.6 1.9 2.2
208 220 240	84.0	145.6	176.8	2.7 3.1 3.8	220 250	87.5 –	154.0 –	187.0 –	3.1 4.0
380 415 480 500	175.0	266.0	323.0	3.4 4.0 4.6 5.4	– – –	– – –	– – –	– – –	– – –

Undervoltage Release Mechanism

Voltage Rating (Ac Freq = 50/60 Hz)	Factory Mounted				Field Mounted	
	Connection Type and Location				Field Installation Kits②	
	18-inch Pigtail Leads			Terminal Block	Pigtail Leads	Terminal Block
	Same Side	Rear③	Opposite Side	Same Side		
	Suffix Numbers				Catalog Numbers	
Left-Pole Mounting Ac Ratings③						
12 Vac	U05	U06	U07	U08	UVH5LP02K	UVH5LT02K
24 Vac	U09	U10	U11	U12	UVH5LP03K	UVH5LT03K
48-60 Vac	U13	U14	U153	U16	UVH5LP05K	UVH5LT05K
110-127 Vac	U17	U18	U19	U20	UVH5LP08K	UVH5LT08K
208-240 Vac	U21	U22	U23	U24	UVH5LP11K	UVH5LT11K
380-480 Vac	U25	U26	U27	U28	UVH5LP29K	UVH5LT29K
Left-Pole Mounting Dc Ratings③						
12 Vdc	T01	T02	T03	T04	UVH5LP20K	UVH5LT20K
24 Vdc	T05	T06	T07	T08	UVH5LP21K	UVH5LT21K
48-60 Vdc	T09	T10	T11	T12	UVH5LP23K	UVH5LT23K
110-127 Vdc	T13	T14	T15	T16	UVH5LP26K	UVH5LT26K
220-250 Vdc	T17	T18	T19	T20	UVH5LP28K	UVH5LT28K

Instruction Leaflet/FRED Number 29C174

① Endurance: 3000 electrical operations plus 1000 mechanical operations.
③ Listed with Underwriters Laboratories, Inc. for field installation under E64983.
③ Standard mounting location – leads exit rear of breaker.

R-Frame

Ac Undervoltage Release Mechanism (Handle Reset) Ratings①②

Catalog Suffix	Application Ratings	Electrical Operating Ratings				Approximate Operating Time (ms)				
	Voltage (V)	Supply Voltage (V)	Dropout Voltage (V) Min.	Dropout Voltage (V) Max.	Pickup Voltage (V) Max.	VA	Min.③ UVR Response	Initiation④ Circuit Breaker Contact Separation	Maximum Circuit Breaker Contact Opening	Dielectric⑤ Withstand Voltage (V)
02/02K	12	12	4.2	8.4	10.2	2.3	5	46	77	1024
03/03K	24	24	8.4	16.8	20.4	3.1	5	46	77	1048
05/05K	48-60	48 60	21.0	33.5	40.8	3.4 6.0	5	46	77	1120
08/08K	110-127	110 120 127	44.5	77.0	93.5	3.3 3.6 3.8	5	46	77	1254
11/11K	208-240	208 220 240	84.0	145.6	176.8	4.2 6.6 7.2	5	46	77	1480
29/29K	380-500	380 415 440 480 500	168.0	266.0	323.0	3.8 8.3 8.8 9.6 10.0	5	46	77	2000

Dc Undervoltage Release Mechanism (Handle Reset) Ratings①②

Catalog Suffix	Application Ratings	Electrical Operating Ratings				Approximate Operating Time (ms)				
	Voltage (V)	Supply Voltage (V)	Dropout Voltage (V) Min.	Dropout Voltage (V) Max.	Pickup Voltage (V) Max.	VA	Min.③ UVR Response	Initiation④ Circuit Breaker Contact Separation	Maximum Circuit Breaker Contact Opening	Dielectric⑤ Withstand Voltage (V)
20/20K	12	12	4.2	8.4	10.2	3.4	5	46	77	1024
21/21K	24	24	8.4	16.8	20.4	4.3	5	46	77	1048
23/23K	48-60	48 60	21.0	33.5	40.8	4.8 7.2	5	46	77	1120
26/26K	110-127	110 120 125	43.8	77.0	93.5	3.3 3.6 3.8	5	46	77	1250
28/28K	220-250	220 250	87.5	154.0	187.0	6.6 7.5	5	46	77	1500

Undervoltage Release Mechanism (RH only)

Voltage Rating (Ac Freq = 50/60 Hz)	Factory Mounted	Field Mounted
	Connection Type and Location	Field Installation Kits①
	18-inch Pigtail Leads	Pigtail Leads
	Suffix Numbers②	Catalog Numbers②
12 Vac	**U37**	**UVH6RP02K**
24 Vac	**U41**	**UVH6RP03K**
48-60 Vac	**U45**	**UVH6RP05K**
110-127 Vac	**U49**	**UVH6RP08K**
208-240 Vac	**U53**	**UVH6RP11K**
380-500 Vac	**U57**	**UVH6RP29K**
12 Vdc	**T21**	**UVH6RP20K**
24 Vdc	**T25**	**UVH6RP21K**
48-60 Vdc	**T29**	**UVH6RP23K**
110-125 Vdc	**T33**	**UVH6RP26K**
220-250 Vdc	**T37**	**UVH6RP28K**

Instruction Leaflet/FRED Number 29C178

① Endurance – 500 electrical operations plus 2500 mechanical operations.
② Pigtail wire size – No. 18 AWG (0.82 mm^2). Leads are orange and brown.
③ UVR will override a momentary voltage dip up to the response time shown.
④ Unlatching occurs 1 millisecond before circuit breaker contacts begin to separate.
⑤ For 1 minute.

Accessory Terminal Block (R-Frame)

(For Fixed Mounted Configuration)

General Information

Internal accessory wiring leads are normally supplied with pigtail leads (No. 18 AWG) that exit from the right side of the circuit breaker. Where specified, fixed mounted accessory terminal blocks are available. A maximum of one 24-point terminal block can be installed on the right side of the circuit breaker for the internal accessories.

For convenience in determining the appropriate number of terminal block points required, refer to table at right.

Number of Control Wires For Each Internally Mounted Accessories

Type of Accessory	Number of Contacts Per Single Accessory	Required Number of Wires
Auxiliary Switch	2a/2b 4a/4b	6 12
Alarm (Signal)/ Lockout Switch	1m/1b 2m/2b	6 12
Shunt Trip	N/A	2
Low Energy Shunt	N/A	2
Undervoltage Release Mechanism	N/A	2

Ordering Information①

Factory Installed	Field Mounted
Suffix Number	Catalog Number
Q01	TBRDK

Instruction Leaflet/FRED Number 29C312

Cutler-Hammer PowerNet Communications Kit (OPTIM 550 only) K-, L-, and N-Frames

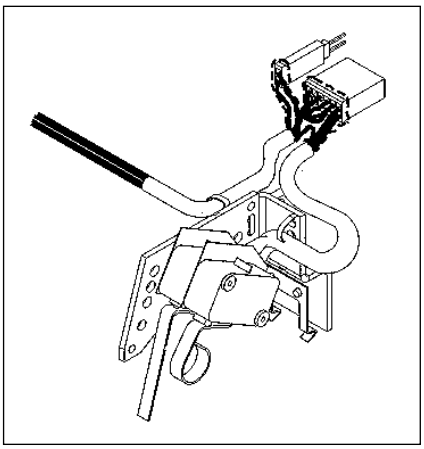

General Information

The Cutler-Hammer PowerNet Communications Kit can be ordered to add Cutler-Hammer PowerNet communications to an existing OPTIM 550 breaker in the field. An 18-inch wiring pigtail is routed to the rear of the breaker: two wires for Cutler-Hammer PowerNet and two wires for 24V Dc (45 mA load). It is recommended that the power supply be an “isolated high quality” unit.

Ordering Information

Cutler-Hammer PowerNet Communications Kit

Circuit Breaker	Catalog Numbers
K-Frame	ICK550K
L-Frame	ICK550L
N-Frame	ICK550N

Instruction Leaflet/FRED Number 29C506, 29C897, 29C898

① One 24-point accessory terminal block provided with circuit breaker when ordered factory installed or shipped from warehouse as separate item when ordered for field installation. See Digitrip RMS master connection diagram (IL 29C714).

Endcap Kit

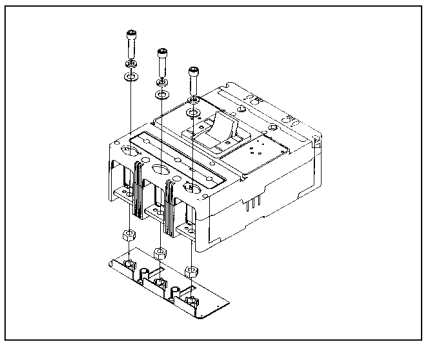

The endcap kit slides onto the line or load conductor of the circuit breaker and acts as a threaded adapter for the conductor to accept a ring terminal or other bolt-on connector. The endcap kit is available with English and metric thread sizes. Screws and washers are supplied by customer. (Field installation only.) Listed per UL File E7819.

Ordering Information

Thread Type	Thread Size	Catalog Number Package of 12 (Priced Individually)
F-Frame		
Imperial Metric	10-32 M-5	**KPEK1** **KPEK1M**
J-Frame		
Imperial Metric	10-32 M-5	**KPEK2** **KPEK2M**
K-Frame		
Imperial Metric	10-32 M-5	**KPEK3** **KPEK3M**
L-Frame		
Imperial Metric	10-32 M-5	**KPEK4** **KPEK4M**

Keeper Nut

The keeper nut slides onto the line or load conductor of the circuit breaker and acts as a threaded adapter for the conductor to accept a ring terminal or other bolt-on connector. The keeper nut is available with English and metric thread sizes. Screws and washers are supplied by customer. (Field installation only.) Listed per UL File E7819.

Ordering Information

F-Frame

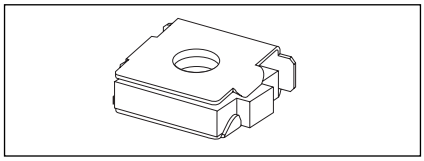

Thread Type	Thread Size	Catalog Number Package of 12 (Priced Individually)
Imperial Metric	10-32 M-5	**KPR1A** **KPR1AM**

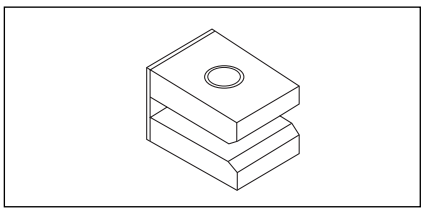

K-Frame

Thread Type	Thread Size	Line/ Load End	Catalog Number Package of 3
Imperial	.375-16	Line Load	**KPR3A** **KPR3B**
Metric	M-8	Line Load	**KPR3AM** **KPR3BM**

L-, M-, N-Frames

Not required. Terminals are threaded.

Plug Nut

J-Frame

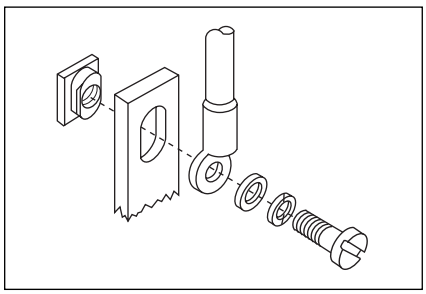

The plug nut is used in applications where screw-connected ring-type terminals are preferred to connect cables to circuit breaker conductors. The plug nut is press-fit into the opening in the circuit breaker terminal conductor. Screws and washers are supplied by customer.

Ordering Information

Thread Type	Thread Size	Catalog Number Package of 6
Imperial Metric	.250-20 M-6	**PLN2** **PLN2M**

Control Wire Terminal Kit

F-Frame

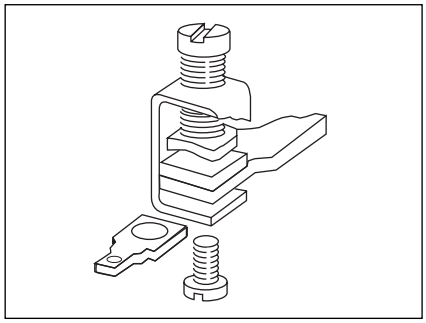

The control wire terminal kit provides a means to tap off control power from a main disconnect using the provided male end of a quick disconnect.

For use with steel or stainless steel① terminals only.

Ordering Information

Package of 12 control wire terminal tangs. Terminals must be ordered separately. Priced individually.

Catalog Number
FCWTK

J- and K-Frames

Not for use with T250KB terminals.

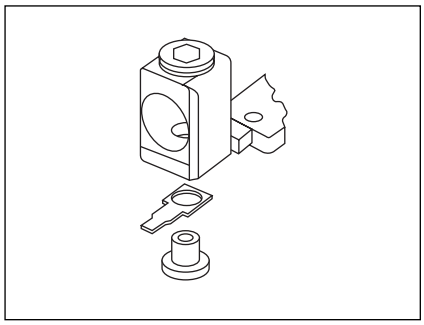

Ordering Information

Package of 12 control wire terminal tangs. Terminals must be ordered separately. Priced individually.

Catalog Number
KCWTK

L-Frame

AWG Wire Range/Number Conductors	Metric Wire Range mm²	Catalog Number
Al/Cu (2) 250 – 350 kcmil	120-150	**TA602LDCW②**
Cu (2) 3/0 – 350 kcmil	120-150	**T602LDCW②**
Al/Cu (2) 400 – 500 kcmil	185-240	**2TA603LDCW①** 2-Pole Kit
Al/Cu (2) 400 – 500 kcmil	185-240	**3TA603LDCW①** 3-Pole Kit
Al/Cu (2) 400 – 500 kcmil	185-240	**4TA603LDCW①** 4-Pole Kit

Multi-Wire Connectors

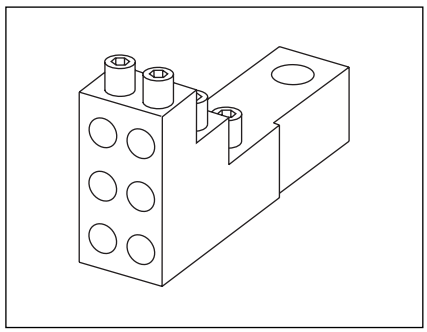

Field-installed multi-wire connectors for the load side (OFF) end terminals. They are used to distribute the load from the circuit breaker to multiple devices without the use of separate distribution terminal blocks.

Multi-wire lug kits include mounting hardware, insulators and tin-plated aluminum connectors to replace three mechanical load lugs. UL listed for copper only as used on the load side (OFF) end.

Ordering Information

Package of 3.

Maximum Amperes	Wires Per Terminal	Wire Size Range AWG Cu	Kit Catalog Number
F-Frame			
225	3	#14-2	**3TA150F3K**
225	6	#14-6	**3TA150F6K**
J-Frame			
225	3	#14-2	**3TA250J3K**
225	6	#14-6	**3TA250J6K**
K-Frame			
400	3	#12-2/0	**3TA400K3K**
400	6	#14-2/0	**3TA400K6K**

① Terminal kits contain one terminal for each pole and one terminal cover.
② Individually packed.

Base Mounting Hardware

Ordering Information

Hardware for surface mounting of circuit breakers is supplied only on request. Hardware consists of mounting screws and lockwashers. Order hardware for circuit breaker pole configurations as required.

Screw Length	Style Number
G-Frame	
2.625 (66.7 mm) 3.000 (76.2 mm)	**624B375G23** **8703C80G05**

Imperial Thread / **Metric Thread**

Number of Poles	Description	Type of Mounting	Style / Catalog Number		Number of Poles	Description	Type of Mounting	Style / Catalog Number
F-Frame								
1	.164-32 x 3.188 inch Pan-Head Steel Screws, Lockwashers, and Clamps	Individual Group (one set of hardware for two circuit breakers)	**624B375G01** **624B375G02**		1	M4 - 0.7 x 80 mm Pan-Head Steel Screws, Lock-washers, and Clamps	Individual Group (one set of hardware for two circuit breakers)	**4218B80G09** **4218B80G10**
2	.164-32 x 1.5 inch Pan-Head Steel Screws and Lock-washers	Individual	**4218B80G01**		2	M4 - 0.7 x 38 mm Pan-Head Steel Screws and Lockwashers	Individual	**4218B80G11**
3, 4	.164-32 x 1.5 inch Pan-Head Steel Screws and Lock-washers	Individual	**BMH1**		3, 4	M4 - 0.7 x 38 mm Pan-Head Steel Screws and Lockwashers	Individual	**BMH1M**
J-Frame								
2, 3, 4	0.250-20 x 2.75 inch Pan-Head Steel Screws and Lockwashers	Individual	**BMH2**		2, 3, 4	M6 – 0.7 x 70mm Pan-Head Steel Screws and Lockwashers	Individual	**BMH2M**
K-Frame								
2, 3, 4	0.250-20 x 1.5 inch Pan-Head Steel Screws and Lockwashers	Individual	**BMH3**		2, 3, 4	M6 – 0.7 x 38mm Pan-Head Steel Screws and Lockwashers	Individual	**BMH3M**
L-Frame								
2, 3, 4	0.250-20 x 1.5 inch Filister-Head Steel Screws and Lockwashers and Flat Washers	Individual	**BMH4**		2, 3	–	Individual	**BMH4M**
M-Frame								
2, 3	0.3125-18 x 1.25 inch Filster-Head Steel Screws and Lockwashers and Flat Washers	Individual	**BMH5**		2, 3	–	Individual	**BMH5M**
N-Frame								
2, 3, 4	0.3125-18 x 1.25 inch Pan-Head Steel Screws and Lock-washers		**BMH5**		2, 3	–	Individual	**BMH5M**
R-Frame								
Supplied by customer								

Drawout Cassette

The drawout cassette is currently for use with the standard 3-pole 65 kA/480 Vac, 1600A and 2000A RD circuit breakers only. It consists of two separate components: the movable mechanism which is factory mounted to the circuit breaker frame (shown in figure) and the stationary mechanism which is housed in the cassette and shipped separately.

The drawout mechanism has four positions.

- Connected – The breaker is fully connected to the primary stabs and secondary contacts.
- Test – The breaker is not connected to the primary stab but is connected to the secondary contacts.
- Disconnected – Both the primary stabs and the secondary contacts are disconnected.
- Withdraw – The breaker can be removed from the cassette.

Ordering Information

RD Drawout Cassette

65 kA/480 Vac version

Description	Catalog Number
Movable Mechanism	**RD20DOM**
Stationary Mechanism	**RD20DOS** (without shutters) **RD20DOSS** (with shutters)

Instruction Leaflet/FRED Number 32697

Note: Movable mechanism must be ordered with RD or RDC circuit breaker and is shipped mounted to circuit breaker frame. Stationary mechanism is ordered separately.

All internal accessories must be factory installed for use with drawout.

RD Drawout Cassette

100 kA/480 Vac version

Description	Catalog Number
Movable Mechanism	**RD20DOM**
Stationary Mechanism	**RD20DOS** (without shutters) **RD20DOSS** (with shutters)

Instruction Leaflet/FRED Number 32697

Terminal Shields

Terminal shields provide protection against accidental contact with live line side terminations. Terminal shields are fabricated from high dielectric insulating material and fasten over the front terminal access openings. Small openings in the shields provide limited access to the terminals for tightening connectors. (Field installation only.)

Ordering Information

G-Frame

Terminal Shield

Number Units in Package	Style Number
10	GTSK3

J-Frame

Number of Poles	Location	Style Number (Package of 10)
2, 3 4	Line End	1266C07G01 6631C01G01
2, 3 4	Load End	6641C16G01 6641C16G02

L-Frame

Style Number (Package of 1)
314CA420G01

F-Frame

Number of Poles	Location	Style Number	
		Standard (Package of 10) (Priced Individually)	Special - For use when electrical operator is mounted on circuit breaker
1	Line	625B229G06	–
2		625B229G07	–
3		625B229G08	4210B95G01
4		625B229G09	4210B95G02

K-Frame

Number of Poles	Location	Catalog Number (Package of 10)
2, 3	Line	TS33LN
4	Line	TS34LN
3	Load	TS33LD

M-Frame

Style Number (Package of 1)
4203B20G01

Terminal End Covers

F-Frame

The terminal end covers are designed for use in motor control center applications where, because of confined spaces, line side conductors are normally custom fitted. The molded end covers are made of high dielectric glass-polyester and slide over the line ends of the circuit breaker. Close fitting conductor openings are molded into the end covers. The end cover and circuit breaker case fit together to form terminal compartments that isolate discharged ionizing gases during circuit breaker tripping. Terminal end covers are available with two conductor opening diameters, 0.25 and 0.41 inch, and are listed per UL File E7819. (Field installation only.)

Ordering Information

The terminal end cover is available for 3-pole circuit breakers only. Two conductor opening sizes are available. Specify quantity (one per circuit breaker) when ordering.

Conductor Opening Diameter (Inches)	Catalog Number
0.25 (6.35 mm)	TEC1
0.41 (10.41 mm)	TEC2

Interphase Barriers

The interphase barriers provide additional electrical clearance between circuit breaker poles for special termination applications. The barriers are high dielectric insulating plates that are installed in the molded slots between the terminals. (Field installation only.) Two per package.

Frame	Catalog Number
F	IPB1
J	IPB2
K	IPB3
L	IPB4
M	IPB4
N	IPB5

Base Mounting Plate①
G-Frame GD/GC/GHC

Ordering Information

Number Units in Package	Style Number
1	**207B513G01**

DIN Rail Adapter②③
G-Frame GD/GC/GHC

Ordering Information

Number Units in Package	Style Number
10	**1225C79G01**
10	**1225C79G02④**

Instruction Leaflet/FRED Number 29C091

Key Operated Attachment
G-Frame GD/GC/GHC

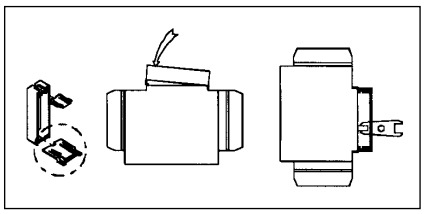

Ordering Information

Number Units in Package	Style Number
10	**GK0A**

Instruction Leaflet/FRED Number 29C090

① Suitable for mounting (6) single-pole circuit breakers.
② For use with standard 35 mm DIN Rail such as, 35 x 7.5 or 35 x 15 mm per DIN EN50022.
③ Adapter mounting screws included are for use with 2- and 3-pole circuit breakers. Adapters for 1-pole circuit breakers clip into the base molding.
④ For use on 3-pole breakers only.

Lock Dog (non-padlockable) G-Frame GD/GC/GHC/GB/GHB/GMCP

Ordering Information

Number Units in Package	Style Number
1	1294C01H01

Non-Padlockable Handle Block

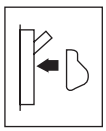

The nonlockable handle block secures the circuit breaker handle in either the ON or OFF position. (Trip-free operation allows the circuit breaker to trip when the handle block holds the circuit breaker handle in the ON position.) The device is positioned over the circuit breaker handle and secured by a setscrew to deter accidental operation of the circuit breaker handle. Listed per UL File E7819. (Field installation only.)

Ordering Information

Frame	Catalog Number
F	LKD1
J, K	LKD3
L, M, N	LKD4

Padlockable Handle G-Frame GD/GC/GHC/GB/GHB

Ordering Information

Number Units in Package	Style Number
10	1223C77G03

(Accepts .285 Lock Shank)

Padlockable Handle Block

The device is positioned in the cover opening to prevent handle movement. Will accommodate one 5/16 padlock.

Ordering Information

Frame	Catalog Number
J, K	PHB3

Snap-On Padlockable Handle Lock Hasp

The snap-on padlockable handle lock allows the handle to be locked in the OFF or ON position. (Trip-free operation allows the circuit breaker to trip when the handle lock holds the circuit breaker handle in the ON position.) This device was designed for use on the 1-pole circuit breaker, but may be used on 1-, 2-, 3-, and 4-pole styles. The handle lock snaps onto the escutcheon area of the handle with an optional retaining screw for added secureness. The handle lock will accommodate one padlock with a 1/4-inch (6 mm) shackle. Listed per UL File E7819. (Field installation only.)

Ordering Information

Frame	Catalog Number
F	PHB1

Padlockable Handle Lock Hasp

The padlockable handle lock hasp allows the handle to be locked in the ON or OFF position. (Trip-free operation allows the circuit breaker to trip when the handle lock holds the circuit breaker handle in the ON position.) The hasp mounts on the circuit breaker cover within the trimline. The cover is predrilled on both sides of the operating handle so that the hasp can be mounted on either side of the handle. The hasp will accommodate up to three padlocks with 1/4-inch (6 mm) shackles. Listed per UL File E7819. (Field installation only.)

The padlockable handle lock can be mounted on either side of the operating handle. One per circuit breaker. (Field installation only.)

Ordering Information

Description	Catalog Number
F-Frame	
1-pole breakers	**PHL1**
2-, 3-, 4-pole breakers	**PLK1**

Instruction Leaflet/FRED Number 29C230

J, K-Frames	
2-, 3-, 4-pole breakers	**PLK3**
For Left Side Mounting	**PLK3LOFF**①
For Right Side Mounting	**PLK3ROFF**①

Instruction Leaflet/FRED Number 29C232

L-Frame	
Side Mounted	
Lock On or Off	**HLK4**
Lock Off Only (Left-Hand Mount)	**HLK4LOFF**①

Instruction Leaflet/FRED Number 29C234

Top Mounted	
Lock On or Off	**HLK4S**
Lock Off Only	**HLK4SOFF**①

Instruction Leaflet/FRED Number 29C234C

M-Frame	
Lock On or Off	**HLK4**
Lock Off Only (Left-Hand Mount)	**HLK4LOFF**①

Instruction Leaflet/FRED Number 29C234

Vertical Mounting	
Lock On/Off	**HLK45**
Lock Off Only	**HLK45OFF**

Instruction Leaflet/FRED Number 29C234C

N-Frame	
Side Mounted	**PLK5**

Instruction Leaflet/FRED Number 29C234

Top Mounted (On/Off)	**PLK5S**
Top Mounted (Off Only)	**PLK5SOFF**①

Instruction Leaflet/FRED Number 29C234C

R-Frame	
Lock On/Off	**HLK6**
Lock Off Only	**HLK6OFF**①

Instruction Leaflet/FRED Number 29C240

① For padlockable handle lock hasp to padlock handle in OFF position only order either catalog number.

Cylinder Lock

The cylinder lock internally blocks the trip bar in the tripped position to prevent the circuit breaker from being switched to ON. The cylinder lock is factory installed in the circuit breaker cover. Other internally mounted accessories cannot be installed in the same pole as the cylinder lock. (Factory installation only.)

The cylinder lock is factory installed in the left pole only of the circuit breaker cover. Internal accessories cannot be installed in the same pole as the cylinder lock.

Ordering Information

Frames	Catalog Number
F, J, K	Order by description

Key Interlock Kit
(Lock Not Included)

The key interlock is used to externally lock the circuit breaker handle in the OFF position. When the key interlock is locked, an extended deadbolt blocks movement of the circuit breaker handle. Uniquely coded keys are removable only with the deadbolt extended. Each coded key controls a group of circuit breakers for a given specific customer installation.

The key interlock assembly is Underwriters Laboratories, Inc., listed for field installation under UL file E7819 and consists of a mounting kit and a purchaser supplied deadbolt lock. The mounting kit comprises a mounting plate, which is secured to the circuit breaker cover in either the left- or right-pole position, key interlock mounting screws, and a wire seal. Specific mounting kits are required for individual key interlock types.

Ordering Information

Key interlock mounting kits are for field installation only. Select mounting kit catalog numbers to match type of lock used. Key interlocks are supplied by customer.

Lock Manufacturer	Lock Type	Bolt Projection in Withdrawn Position	Kit Catalog Number
F-Frame			
Superior	B-4003-1	3/8 inch	**KYK1**
Kirk	F	3/8 inch	
Square D	SF	None	
Federal Pioneer	VF	3/8 inch	
Castell	K or QK	3/8 inch	**CTK1**

Instruction Leaflet/FRED Number 29C231

J-, K-Frames			
Superior	B-4003-1	3/8 inch	**KYK3**
Kirk	F	3/8 inch	
Square D	SF	None	
Federal Pioneer	VF	3/8 inch	
Castell	K or QK	3/8 inch	

Instruction Leaflet/FRED Number 29C233

L-, M-, N-Frames			
Superior	B-4003-1	3/8 inch	**KYK4**
Kirk	F	3/8 inch	
Square D	SF	None	
Federal Pioneer	VF	3/8 inch	
Castell	K or QK	3/8 inch	**CTK4**

Instruction Leaflet/FRED Number 29C235

R-Frame			
Superior	B-4003-1	1 inch	**KYK6**
Kirk	F	1 inch	
Square D	SF	1 inch	
Federal Pioneer	VF	1 inch	
Castell	K or QK	1 inch	**CTK6**

Instruction Leaflet/FRED Number 29C240

Sliding Bar Interlock

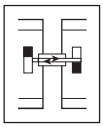

The sliding bar interlock provides mechanical interlocking between two adjacent 3-pole circuit breakers. It is installed on the enclosure cover between the circuit breakers. When the sliding bar interlock handle is moved from one side to the other, a bar extends to alternately block movement of the circuit breaker handles and prevents both circuit breakers from being switched to ON at the same time. Sliding bar interlocks are not UL listed. (Field installation only.)

Ordering Information

The sliding bar interlock is available for mounting between two adjacent 3-pole circuit breakers with circuit breakers centerline spacing as indicated in table and enclosure front panel thickness of 1/8 or 3/16 inch. (For field installation only.)

Frame	Centerline Spacing (inches)	Catalog Number	Instruction Leaflet/ FRED Number
F	4-3/16	**SBK1**	29C310
J	4-3/8	**SBK2**	29C310
K	5-3/4	**SBK3**	29C310
L, M	8-1/2	**SBK4**	29C311
N	8-1/2	**SBK5**	46A8396

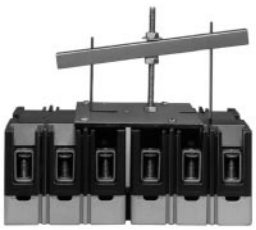

Walking Beam Interlock

The walking beam interlock provides mechanical interlocking between two adjacent circuit breakers of the same pole configuration. The walking beam interlock mounts on a bracket behind and between the circuit breakers. A plunger on each end of the beam is inserted through an access hole in the back plate and base of each circuit breaker. The walking beam interlock prevents both circuit breakers from being switched ON at the same time. If a walking beam interlock is installed, the wiring troughs in the back of the circuit breaker case are blocked by the plungers and cannot be used for cross wiring. Factory modified circuit breakers are required for this application. UL File E3816.

Ordering Information

The walking beam interlock is available for mounting between two adjacent circuit breakers spaced 1/4-inch apart and having the same pole configuration. The two circuit breakers must be factory modified to accept the walking beam interlock assembly (suitable for use with either 2-, 3-, or 4-pole circuit breakers). With properly modified circuit breakers, the walking beam interlock is suitable for field installation. Order circuit breakers specifying modification for walking beam and select walking beam interlock from table on this page. Circuit breakers and walking beam interlock are boxed and shipped separately.

Frame	Catalog Number	Instruction Leaflet/ FRED Number
F	**WBL1**	29C300
K	**WBL3**	29C301
L, M	**WBL4**	29C302
N	**WBL5**	29C303
R	**WBL6**	29C304

Electrical Operator①

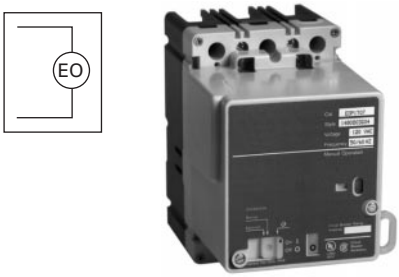

The electrical (solenoid) operator is a single solenoid mechanism that enables local and remote circuit breaker ON, OFF, and reset switching. The electrical operator is mounted on the circuit breaker cover within the trimline of the circuit breaker. The electrical operator uses a unique bistable latch that allows the device to operate using one solenoid. The accessory provides high-speed switching with a maximum operating time of 5 cycles (80 ms) making it suitable for generator synchronizing applications.

Means are provided for remote electrical operation and for local manual operation. A special slide includes provisions for padlocking the circuit breaker handle in the OFF position. The slide will accept three padlock shackles with a maximum diameter of 1/4-inch (6 mm) each. An interlock electrically disconnects the solenoid when the electrical operator cover is removed. The above table provides electrical rating data for the electrical (solenoid) operator.

The electrical (solenoid) operator is Underwriters Laboratories, Inc., listed as a circuit breaker accessory under UL File E64983.

① The electrical operator design is endurance tested for 10,000 electrical operations.
② Use current-limiting type fuse where required.
③ Tolerance: +10%, –15% of nominal voltage.
④ Tolerance: ±10% of nominal voltage.
⑤ Underwriters laboratories listed under UL file E64983.
⑥ The electrical operator design has been endurance tested for 6,000 electrical operations.
⑦ Frequency: 50/60 Hz.
⑧ Maximum operating time: 5 cycles (80 ms).

Ordering Information

F-Frame

Electrical Rating Data②

Voltage	Frequency	Inrush Current Amperes	Maximum Operating Time	Fuse③ Amperes
120④ 240④	50/60 Hz Ac	10 5	5 cycles (80 ms)	3 2
120⑤ 240⑤	Dc Dc	14 8	5 cycles (80 ms)	3-5 2-3

Electrical Operator

Voltage	Frequency	Terminal Block	18-Inch Pigtail Lead
		Catalog Number	
120 240	Ac	**EOP1T07** **EOP1T11**	**EOP1P07** **EOP1P11**
120 240	Dc	**EOP1T07DC** **EOP1T11DC**	**EOP1P07DC** **EOP1P11DC**

Instruction Leaflet/FRED Number 29C200 (AC); 29C210 (DC)

J-Frame

Electrical Rating Data ⑤⑥⑦⑧

Voltage (V)③	Inrush Current (A)	Fuse (A)
120 240	24 12	6 4

Electrical Operator

Operating Voltage	Frequency	Terminal Block
		Catalog Number
120 240	50/60 Hz Ac	**EOP2T07** **EOP2T11**
120 240	Dc	**EOP2T07DC** **EOP2T11DC**

Instruction Leaflet/FRED Number 29C202 (AC); 29C211 (DC)

K-Frame

Electrical Rating Data ⑤⑥⑦⑧

Voltage (V)③	Inrush Current (A)	Fuse (A)
120 240	24 12	6 4

Electrical Operator

Operating Voltage	Frequency	Terminal Block
		Catalog Number
120 240	50/60 Hz Ac	**EOP3T07** **EOP3T11**
120 240	Dc	**EOP3T07DC** **EOP3T11DC**

Instruction Leaflet/FRED Number 29C202 (AC); 29C211 (DC)

The motor operator allows the circuit's breaker to be opened, closed, or reset remotely. It also has a lock-off capability and provisions for manual operation.

The motor operator contains a reversible motor connected to a ball screw. The ball screw drives the circuit breaker handle. Limit switches and relays are used to control the motor.

The motor operator is UL listed as a recognized component suitable for field installation on all type L-frame circuit breakers and molded case switches under UL File E64124.

From the point of energization of the closing mechanism at 85% voltage, the closing time is 30 cycles ± 10%.

Ordering Information

L- and M-Frames

Electrical Rating Data ①②③④

Voltage (V)⑤	Inrush Current (A)
120 Ac 208 240	8 5 4
125 Dc 24	9 27

Instruction Leaflet/FRED Number 29C203

Electrical Operator

Operating Voltage	Frequency	Terminal Block Catalog Number
120 208 240 480	50/60 Hz	**EOPM4T07** **EOPM4T11** **EOPM4T11A** **EOPM4T15**
125 24	Dc	**EOPM4T26** **EOPM4T21**

N-Frame

Electrical Rating Data ①③⑥⑦

Voltage (V)⑤	Frequency	Inrush Current (A)	Fuse (A)
120 208 240 480	50/60 Hz	25 21 19	6 4
48 125	Dc	80 13	

Instruction Leaflet/FRED Number 29C204

Electrical Operator

Operating Voltage	Frequency	Pigtail Leads Catalog Number
120 208 240 480	50/60 Hz	**EOP5T07** **EOP5T09** **EOP5T11** **EOP5T15**
48 125	Dc	**EOP5T22** **EOP5T26**

R-Frame

Available Motor Operator Ratings and Operating Conditions⑧⑨⑩⑪

Rating Voltage (V)⑫	Frequency	Motor Inrush Current (A)
120 240 48	50/60 Hz 50/60 Hz Dc	40 27 53

Instruction Leaflet/FRED Number 29C205

Electrical Operator

Operating Voltage	Frequency	Factory Installed Terminal Block Catalog Number
120 240 48	50/60 Hz 50/60 Hz Dc	**EOP6T08K** **EOP6T11K** **EOP6T21K**

① Underwriters Laboratories Inc. listed under UL File E64983.
② The electrical operator design has been endurance tested for 6,000 electrical operations.
③ Frequency: 50/60 Hz.
④ Maximum operating time: 5 cycles (80 ms).
⑤ Tolerance: +10%, –15% of nominal voltage.
⑥ The electrical operator design has been endurance tested for 2,500 electrical operations.
⑦ Maximum operating time: 12 cycles max. Operator is an intemittent duty device. The safe duty cycle (OFF to ON to OFF) should not exceed one per minute.
⑧ Operator is an intermittent duty service. The safe duty cycle (OFF to ON to OFF) should not exceed one per minute.
⑨ Electric Operating time at rated voltage;
(a) To turn breaker ON – 1/2 second max.
(b) To turn breaker OFF – 1/2 second max.
⑩ Motor operating temperature; Class "A" temperature limits apply.
⑪ A minimum 1 kVA power source is recommended for motor operation.
⑫ Applied voltage should be no less than 85% or no more than 110% of rated.

Plug-in Adapters

Plug-in adapters simplify installation and front removal of circuit breakers. Individual line and load plug-in adapters are available for rear connection applications on 2-, 3-, and 4-pole circuit breakers. Common mounting plates for line- and load-end adapters are available.

Ordering Information

F-Frame

Continuous Current Rating (Amperes)	2-Pole	3-Pole	4-Pole
	Style Number		
100 150-225	507C036G13 507C036G14	507C036G15 507C036G16	179C968G03 179C968G04
Mounting Plate	176C511H01	507C047H01	①

Instruction Leaflet/FRED Number 13782

K-Frame

Continuous Current Rating (Amperes)	Catalog Number		
	2-Pole	3-pole	4-Pole
400	PAD32	PAD33	PAD34
Mounting Plate	②	PMP33	PMP34

Instruction Leaflet/FRED Number 15378

L-Frame

Continuous Current Rating (Amperes)	Catalog Number	
	2-Pole	3-pole
600	506C059G03	506C059G04
Mounting Plate	504C824H01	504C824H01

Instruction Leaflet/FRED Number 29C314

J-Frame

Continuous Current Rating (Amperes)	Terminal End	2-Pole	3-Pole	4-Pole
		Style/Catalog Number		
250	Line Load 1 Line and 1 Load	1260C86G05 1260C86G07 506C144G27	1260C86G06 1260C86G08 506C144G28	1231C67G01 1231C67G02 –
Mounting Plate	–	②	PMP23	–

Instruction Leaflet/FRED Number 149321

M-Frame

Continuous Current Rating (Amperes)	Catalog Number	
	2-Pole	3-Pole
800	2614D53G05	2614D53G06
Mounting Plate	1290C73H01	

Instruction Leaflet/FRED Number 15073

N-Frame

Continuous Current Rating (Amperes)	Style Number	
	2-Pole	3-pole
1200	2614D53G03	2614D53G04
Mounting Plate	1290C73H01	

Instruction Leaflet/FRED Number 13782

① Refer to Cutler-Hammer for availability.
② Use 3-pole mounting plate for 2-pole circuit breaker.

Rear Connecting Studs

Rear connecting studs are available in several sizes to accommodate specific fixed-mounted circuit breaker applications.

Each rear connecting stud assembly consists of one stud and one tube. To maintain proper clearances between poles, select alternate long and short stud assemblies for circuit breakers with more than one pole. One assembly is required for line-end and one for load-end of each pole. Tubes must be ordered separately. Connecting studs are available only with English thread sizes.

Ordering Information

F-Frame

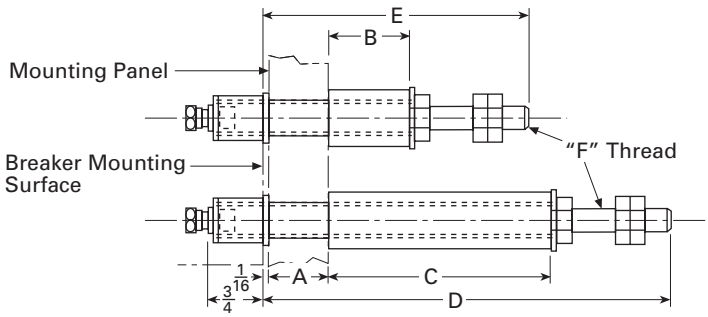

Stud Ampere Rating	Stud Style Number	Panel Thickness (Inches)	Tube Length (Inches)		Tube Style Number	Dimensions (Inches)		
		A	B	C		D	E	F
For 15A to 100A Circuit Breakers								
100A Short	**451D874G01**	1	11/16	–	**32B9446H20**	–	3-5/8	15/16 - 18
100A Short	**451D874G01**	1-1/16 to 15/16	13/8	–	**32B9446H21**	–		
100A Short	**451D874G01**	3/8 to 5/8	1-11/16	–	**32B9446H22**	–		
100A Short	**451D874G01**	1/4 to 5/16	2	–	**32B9446H23**	–		
100A Long	**451D874G02**	1	–	3-7/16	**32B9446H24**	6-1/8	–	
100A Long	**451D874G02**	1-1/16 to 15/16	–	3-3/4	**32B9446H25**		–	
100A Long	**451D874G02**	3/8 to 5/8	–	4-1/16	**32B9446H26**		–	
100A Long	**451D874G02**	1/4 to 5/16	–	4-3/8	**32B9446H27**		–	
For 110A to 150A Circuit Breakers								
150A Short	**374D883G01**	1	11/16	–	**374D883H06**	–	4-1/4	1/16 - 14
150A Short	**374D883G01**	11/16 to 15/16	13/8	–	**374D883H07**	–		
150A Short	**374D883G01**	3/8 to 5/8	1-11/16	–	**374D883H08**	–		
150A Short	**374D883G01**	1/4 to 5/16	2	–	**374D883H09**	–		
150A Long	**374D883G02**	1	–	3-7/16	**374D883H10**	7-1/2	–	
150A Long	**374D883G02**	11/16 to 15/16	–	3-3/4	**374D883H11**		–	
150A Long	**374D883G02**	3/8 to 5/8	–	4-1/16	**374D883H12**		–	
150A Long	**374D883G02**	1/4 to 5/16	–	4-3/8	**374D883H13**		–	

Rear Connecting Studs

Ordering Information

J-Frame

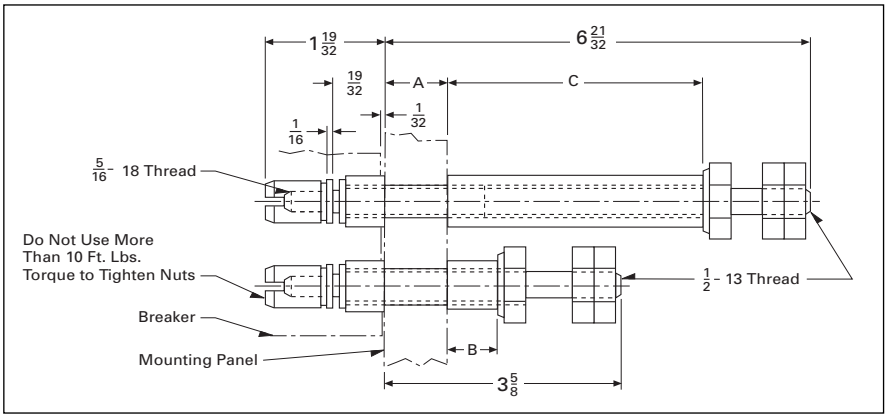

Stud Ampere Rating	Stud Style Number	Panel Thickness (Inches)	Tube Length (Inches)		Tube Style Number
		A	B	C	
250A Short	**5010D23G01**	3/4 – 1	27/32	–	**456D983H05**
250A Short	**5010D23G01**	1/2 – 3/4	1-3/32	–	**456D983H06**
250A Short	**5010D23G01**	1/4 – 1/2	1-1/32	–	**456D983H07**
250A Long	**5010D23G02**	3/4 – 1	–	37/8	**5010D23H05**
250A Long	**5010D23G02**	1/2 – 3/4	–	41/8	**5010D23H06**
250A Long	**5010D23G02**	1/4 – 1/2	–	43/8	**5010D23H07**

K-Frame

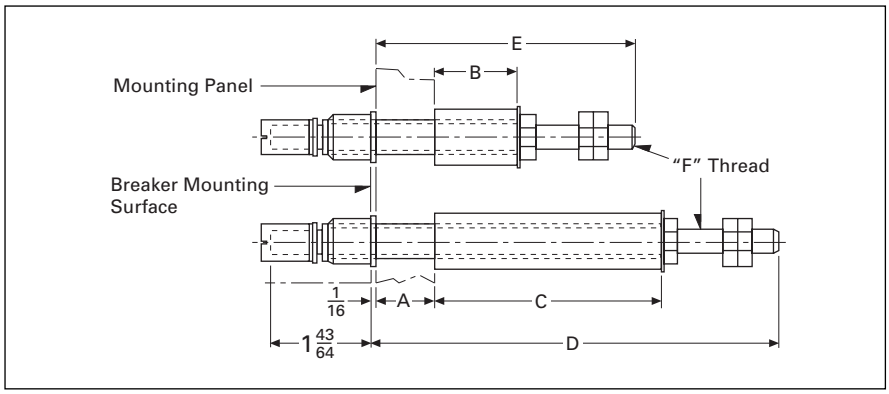

Stud Length	Stud Style Number	Panel Thickness (Inches)	Tube Length (Inches)		Standard Tube Style Number	Dimensions (Inches)		
		A	B	C		D	E	F
400A Short	**6642C14G02**	3/4 to 1	27/32	–	**313C909H17**	–	3-21/32	3/4 - 16
400A Short	**6642C14G04**	1/2 to 3/4	1-3/32	–	**313C909H18**	–		
400A Short	**6642C14G06**	1/4 to 1/2	1-11/32	–	**313C909H19**	–		
400A Long	**6642C14G03**	3/4 to 1	–	3-25/32	**313C909H20**	–		
400A Long	**6642C14G05**	1/2 to 3/4	–	4-1/32	**313C909H21**	6-37/64		
400A Long	**6642C14G07**	1/4 to 1/2	–	4-9/32	**313C909H22**	–		

L-Frame

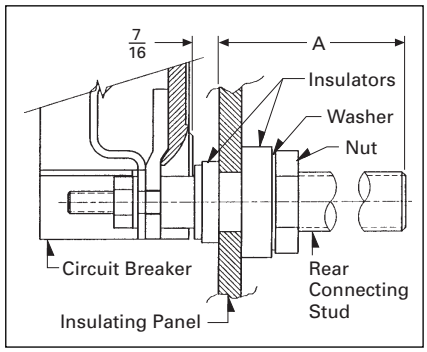

Stud Length (A)	Stud Style Number
5-15/32	**314C960G07**
7-31/32	**314C960G08**
10-15/32	**314C960G09**

M-Frame①

Stud Ampere Rating	Diameter, Inches and Thread	Extension Back of Breaker, Inches	Stud Style Numbers
225	1/2-13	3-21/32	**314C960G01**
400	3/4-16	5-29/32	**314C960G04**
400	3/4-16	8-13/32	**314C960G05**
400	3/4-16	10-29/32	**314C960G06**
600	1-12	5-29/32	**314C960G07**
600	1-12	8-13/32	**314C960G08**
600	1-12	10-29/32	**314C960G09**
800	1-1/8-12	5-29/32	**314C960G10**
800	1-1/8-12	8-13/32	**314C960G11**
800	1-1/8-12	10-29/32	**314C960G12**

N-Frame①

Stud Ampere Rating	Diameter, Inches and Thread	Extension Back of Breaker, Inches	Stud Style Numbers
800	1-1/8-12	5-1/2	**623B222G01**
800	1-1/8-12	8	**623B222G02**
800	1-1/8-12	10-1/2	**623B222G03**
1200	1-1/4-12	5-1/2	**373B375G04**
1200	1-1/4-12	10-1/2	**373B375G03**

① Not UL listed.

Panelboard Connecting Straps

Panelboard connecting straps are used to connect the circuit breaker terminals to the panelboard bus. The panelboard connecting straps are available with various ratings for outside and center poles. (Field installation only.)

Ordering Information

Panelboard connecting straps are available to meet the needs of most standard panelboard applications. Style numbers for mounting brackets for CDP panelboard installations are also included.

Refer to panelboard manufacturer for compatibility.

F-Frame

Panelboard Connecting Straps

Bus Spacing (Inches)	Continuous Current Rating (Amperes)	Pole Connector Type	
		Center	Outside
		Style Number	
5-3/4-Inch Deep Box, 600 Vac Maximum			
2-3/4	50	673B142G02	673B142G09
2-3/4	100	673B142G02	673B142G10
2-3/4	150	673B142G04	673B142G03
3-1/2	50	1253C72G01	1253C72G03
3-1/2	100	1253C73G03	1253C73G06
3-1/2	150	1253C73G01	1253C73G05

Mounting Bracket

Number of Poles	Style Number
2	624B600H02
3	624B600H01

J-Frame

Panelboard Connecting Straps

Bus Spacing (Inches)	Continuous Current Rating (Amperes)	Pole Connector Type	
		Center	Outside
		Style Number	
3-1/2	250	2600D26G01	2600D26G02

Mounting Bracket

Number of Poles	Style Number
2, 3	1576707

K-Frame

Panelboard Connecting Straps

Bus Spacing (Inches)	Continuous Current Rating (Amperes)	Pole Connector Type	
		Center	Outside
		Style Number	
3-1/2	400	4212B78G02	4212B77G01

Mounting Bracket

Number of Poles	Style Number
2, 3	208B264H01

L-Frame

Panelboard Connecting Straps

Continuous Current Rating (Amperes)	Pole Connector Type	
	Center	Outside
	Style Number	
600	624B609G01	506C052G01

Mounting Bracket

Number of Poles	Style Number
2, 3	208B297H01

M-Frame

Panelboard Connecting Straps

Bus Spacing (Inches)	Continuous Current Rating (Amperes)	Connector Type	Pole Connector Type
			Style Number
3-1/2	800	Short Medium Long	314C996G01 314C996G02 314C996G03

Mounting Bracket

Style Number
315C270H01

N-Frame

Panelboard Connecting Straps

Bus Spacing (Inches)	Continuous Current Rating (Amperes)	Connector Type	Pole Connector Type
			Style Number
3-1/2	1200	Short Medium Long	505C606G04 505C606G05 505C606G06

Mounting Bracket (Four (4) Required)

Style Number
315C270H01

Flange Mounted Flex Shaft™

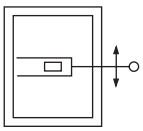

The Flex Shaft type handle mechanism is an extra heavy-duty handle mechanism designed for mounting in flange-type enclosures. An operating handle, flexible shaft, and mechanism are required for standard application.

The handle can be locked in the RESET position with up to three padlocks. The handle is suitable for Types 1, 3R, 4①, 4X①, and 12 fabricated enclosures. The handle fits the industry standard cutout.

Eight lengths of shafts are available for use with the wide range of depths of various enclosures (3 feet through 10 feet). These choices enable this mechanism to be mounted in various depth, width, and height enclosures.

Note: when selecting the length of shaft, ensure minimum bending radius of 4 inches is maintained to operate properly.

The standard method of shipment includes the mechanism preset at the factory; however, minor field adjustments may be required.

For this publication, the term Circuit Breaker shall also include the molded case switch and Series C motor circuit protector (HMCP).

UL File E64893.

① Type 4/4X handle mechanisms are available. Add suffix X to complete catalog number.
② Add suffix I to complete catalog number for IEC handle. Add suffix L to complete catalog number for 6-inch handle.

Ordering Information

Catalog Number includes complete assembly consisting of C371 handle, flexible shaft, operating mechanism, and door interlock hardware to fit industry standard flange cutout.

Length of Flex Shaft (in feet)	Catalog Number
F-Frame②	
3	F1S03C
4	F1S04C
5	F1S05C
6	F1S06C
7	F1S07C
8	F1S08C
9	F1S09C
10	F1S10C

Instruction Leaflet/FRED Number 15609

J-Frame②	
3	F2S03C
4	F2S04C
5	F2S05C
6	F2S06C
7	F2S07C
8	F2S08C
9	F2S09C
10	F2S10C

Instruction Leaflet/FRED Number 15605

K-Frame②	
3	F3S03C
4	F3S04C
5	F3S05C
6	F3S06C
7	F3S07C
8	F3S08C
9	F3S09C
10	F3S10C

Instruction Leaflet/FRED Number 15604

L- and M-Frames	
4	F4S04
5	F4S05
6	F4S06
10	F4S10

Instruction Leaflet/FRED Number 15606

N-Frame	
4	F5S04
5	F5S05
6	F5S06
10	F5S10

Instruction Leaflet/FRED Number 15606

R-Frame	
4	F6S04
5	F6S05
6	F6S06

Instruction Leaflet/FRED Number 15606

Flange Mounted Type SM Safety

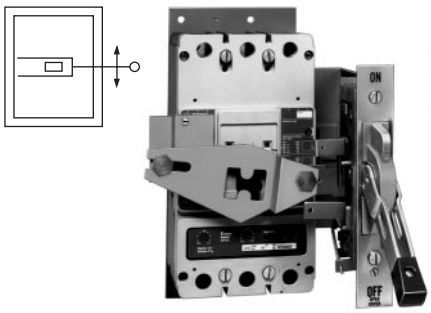

The SM safety handle mechanism provides a means of externally operating a circuit breaker mounted in an enclosure and is designed to reduce the possibility of circuit breaker tampering. The handle mechanism is especially suited for use in automotive and machine tool industries through its conformance to Type 12 and J. I. C. requirements. A specially modified handle mechanism for Type 4 enclosure application is also available order by description. The handle mechanism will accept up to three padlock shackles, each with a maximum diameter of 3/8 inch (9.52mm). UL File E64893.

Through-the-Door Type MC Motor Control

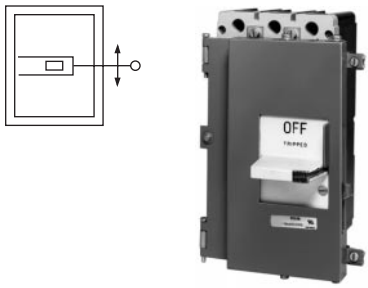

The MC motor control handle mechanism is a linear-operating, fixed-depth mechanism designed for through-the-door mounting in standardized and shallow depth enclosures. The handle mechanism provides positive operation and direct disconnect status indication. It is interlocked with the enclosure door so that the door can be opened only when the handle is set to OFF. (A defeater, supplied with the handle mechanism, can be used to bypass the interlock for maintenance and inspection.) The handle mechanism will accept up to three padlock shackles, each with a maximum diameter of 3/8 inch (7.92 mm).UL File E56845.

Ordering Information

Description		Catalog Number
F-Frame		
Right-Hand Mounting Enclosure Cover	Hinged on Left	**SM150R**
Left-Hand Mounting Enclosure Cover	Hinged on Right	**SM150L**

Instruction Leaflet/FRED Number 14439

J-Frame

Right-Hand Mounting Enclosure Cover	Hinged on Left	**SM250JR**
Left-Hand Mounting Enclosure Cover	Hinged on Right	**SM250JL**

Instruction Leaflet/FRED Number 29C274

K-Frame

Right-Hand Mounting Enclosure Cover	Hinged on Left	**SM400KR**
Left-Hand Mounting Enclosure Cover	Hinged on Right	**SM400KL**

Instruction Leaflet/FRED Number 29C274

L- and M-Frames

Hinged on Left	**SM600R**
Hinged on Right	**SM600L**

Instruction Leaflet/FRED Number 29C284

① Width spacer kits cannot be used with short rod at minimum enclosure depth.

Ordering Information

Description	Catalog Number
F-Frame	
For use with Type 1 Enclosure Catalog	**SMCU150FD**
For use with Type 12 Enclosure Catalog	**CMCU150FD**

Instruction Leaflet/FRED Number 14572

J-Frame

For use with Type 1 Enclosure Catalog	**SMCU250JD**
For use with Type 12 Enclosure Catalog	**CMCU250JD**

Instruction Leaflet/FRED Number 29C273

K-Frame

For use with Type 1 Enclosure Catalog	**SMCU400KD**
For use with Type 12 Enclosure Catalog	**CMCU400KD**

Instruction Leaflet/FRED Number 29C273

M-Frames

For use with Type 1 Enclosure Catalog	**SMCU600LD**
For use with Type 12 Enclosure Catalog	**CMCU600LD**

Instruction Leaflet/FRED Number 29C283

Through-the-Door Rotary

These compact rotary handle mechanisms are especially designed for use with the GD/GC/GHC circuit protection devices. The Close-Coupled version is designed for mounting in a shallow enclosure, while the Vari-Depth is suitable for deep enclosures.

Both G-frame handle mechanisms are suitable for use on Type 1 enclosures. In addition, the Vari-Depth handle mechanism is offered for use with Types 3R, 12, and 4X enclosures.

The new handles are a compact, plastic, general purpose design which is easy to install. These mechanisms are commonly used where high volume, standardized enclosures are being fabricated.

The Close-Coupled design is available with or without a shroud. The handle is offered in two colors; black or yellow. An escutcheon ring and interlock clip are provided as standard. This standard design includes a lock-off feature.

The Vari-Depth design includes an operating mechanism, shaft, and external handle. The handle is available in two colors; black or yellow. An external lock-off is included in the handle design. The shaft may be cut to size to fit the enclosure.

UL and CSA listed.

Ordering Information

Breaker Frame	Enclosure Type	Handle Color	Shaft Length	Shroud Included	Catalog Number
G-Frame Vari-Depth Design					
(Catalog Number includes complete assembly consisting of handle, shaft, and operating mechanism.)					
GD/GC/GHC	Type 1	Black	14 inches	–	**HRGCV11L**
GD/GC/GHC	Type 1	Yellow			**HRGCV31L**
GD/GC/GHC	Type 3R/12/4X	Black			**HRGCV14L**
GD/GC/GHC	Type 3R/12/4X	Yellow			**HRGCV34L**
G-Frame Close-Coupled Design					
(Catalog Number includes complete assembly consisting of operating handle and door interlock.)					
GD/GC/GHC	Type 1	Black	–	No	**HRGCC10**
GD/GC/GHC	Type 1	Black		Yes	**HRGCC1S**
GD/GC/GHC	Type 1	Yellow		No	**HRGCC30**
GD/GC/GHC	Type 1	Yellow		Yes	**HRGCC3S**

Instruction Leaflet/FRED Number 15567 (Close Coupled);
Instruction Leaflet/FRED Number 15569 (Variable Depth)

Through-the-Door Rotary

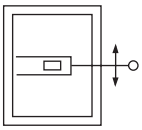

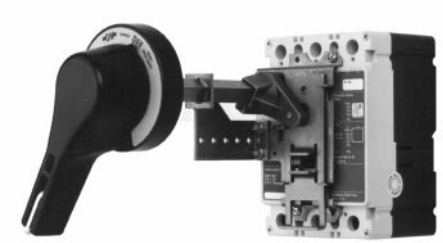

The general purpose rotary handle mechanisms are suitable for use with Types 1, 3R, (4, 4X), and 12 fabricated enclosures. They are designed for use with Series C F-frame circuit breakers, molded case switches, and motor circuit protectors (HMCP).

Required for a standard application are the operating handle, shaft, and mechanism.

The operating handle has been designed to meet NFPA 79 requirements. It may be mounted in either the horizontal or the vertical direction. The handle was ergonomically designed with extra clearance for a "gloved hand" to operate. It may be padlocked in the OFF position utilizing 3 padlocks.

The standard label on the operating handle indicates ON/Tripped/OFF/Reset. UL File E64893

To meet the various enclosure depths, four variable depth shafts are offered (6-inch, 12-inch, 16-inch, and 24-inch). Each shaft includes a support brace to ensure proper alignment. In addition, the 16-inch and 24-inch extra long shafts include an adjustable support bracket.

The standard mechanism located on the breaker does include means for internally locking the breaker in the "OFF" position with up to three padlocks each with a maximum diameter of.312-inch.

Ordering Information

Shaft Length (Inches)	Complete Catalog Number①	Separate Style Number			Catalog Number	
		Standard Handle③	Breaker Mechanism④	Shaft⑤	IEC IP65⑤⑥	IEC IP66⑤⑥
F-Frame						
6	HM1R06	6648C22G01	6648C23G11	4217B37G04	WHM1R06	WHM1R06X
12	HM1R12	6648C22G01	6648C23G11	4217B37G01	WHM1R12	WHM1R12X
16	HM1R16	6648C22G01	6648C23G11	4217B37G02	WHM1R16	WHM1R16X
24	HM1R24	6648C22G01	6648C23G11	4217B37G03	WHM1R24	WHM1R24X

Instruction Leaflet/FRED Number 15594

J-Frame						
6	HM2R06	6648C22G01	6648C23G02	4217B37G04	WHM2R06	WHM2R06X
12	HM2R12	6648C22G01	6648C23G02	4217B37G01	WHM2R12	WHM2R12X
16	HM2R16	6648C22G01	6648C23G02	4217B37G02	WHM2R16	WHM2R16X
24	HM2R24	6648C22G01	6648C23G02	4217B37G03	WHM2R24	WHM2R24X

Instruction Leaflet/FRED Number 15599

K-Frame						
6	HM3R06	6648C22G01	6648C23G13	4217B37G04	WHM3R06	WHM3R06X
12	HM3R12	6648C22G01	6648C23G13	4217B37G01	WHM3R12	WHM3R12X
16	HM3R16	6648C22G01	6648C23G13	4217B37G02	WHM3R16	WHM3R16X
24	HM3R24	6648C22G01	6648C23G13	4217B37G03	WHM3R24	WHM3R24X

Instruction Leaflet/FRED Number 15600

L- and M-Frames						
6	HM4R06	6648C22G11	6648C23G07	4217B37G04	WHM4R06	WHM4R06X
12	HM4R12	6648C22G11	6648C23G07	4217B37G01	WHM4R12	WHM4R12X
16	HM4R16	6648C22G11	6648C23G07	4217B37G02	WHM4R16	WHM4R16X
24	HM4R24	6648C22G11	6648C23G07	4217B37G03	WHM4R24	WHM4R24X

Instruction Leaflet/FRED Number 15601

N-Frame						
6	HM5R06	6648C22G11	6648C23G07	4217B37G04	WHM5R06	WHM5R06X
12	HM5R12	6648C22G11	6648C23G07	4217B37G01	WHM5R12	WHM5R12X
16	HM5R16	6648C22G11	6648C23G07	4217B37G02	WHM5R16	WHM5R16X
24	HM5R24	6648C22G11	6648C23G07	4217B37G03	WHM5R24	WHM5R24X

Instruction Leaflet/FRED Number 15602

Type 4/4X handles are similar to standard handles except they include an internal neoprene gasket. Type 4/4X handle style number is 6648C22G03. Due to gasketing effect between the handle and the housing, the handle may not indicate a tripped position.

Accessories

As an option, an auxiliary switch is offered so that the control panel builder may electrically indicate the status of the breaker. This accessory would be mounted on the mechanism and comes with 24-inch pigtail leads.

Style Number	5108A61G01

Refer to CD-ROM, SA.74A.01.T.E, for replacement type Vari-depth and AMT handle mechanisms.

① Complete catalog number includes the standard handle, mechanism, shaft, and support brace/bracket.
② Handle is designed suitable for Types 1, 3R, and 12 enclosures. Use style number 6648C22G03 for Type 4/4X handle or add X suffix to complete catalog number.
③ The standard handle label indicates ON/Tripped/OFF/Reset.
③ Breaker mechanism includes a shaft support bracket and its parts.
④ Longer shafts (16-inch and 24-inch) include an adjustable support extension.
⑤ IEC Handle Mechanism supplied with Metric thread mounting hardware.
⑥ Complete Catalog Number includes a handle, mechanism and shaft.

Door Hardware

F-, J-, K-, L- and M-Frames

Door Hardware listed in this section may be used with Types SM and AMT handle mechanisms.

Three choices of door hardware and an auxiliary handle are offered to provide the best latching scheme for individual needs. The door hardware is designed with a provision for padlocking, and a coin-proof slot that requires the use of a tool to open the door.

Select desired hardware below. Additional latches can be ordered from accessories section if desired.

Hardware Item	Description and Catalog Number
	With sliding latches for smaller panels up to approx. 30-inch high. Catalog Number Right Hand: **DH1R** Left Hand: **DH1L** Instruction Leaflet/FRED Number 13327(L); 13326(R)
	With 2-roller latches for intermediate panels up to approx. 40-inch high. Catalog Number Right Hand: **DH2R** Left Hand: **DH2L** Instruction Leaflet/FRED Number 13325(L); 13324(R)
	With 3-roller latches for larger panels, approx. 40-inch and higher. Catalog Number Right Hand: **DH3R** Left Hand: **DH3L** Instruction Leaflet/FRED Number 13323(L); 13322(R)
	Auxiliary handle for larger panels. Catalog Number Right Hand: **DH4R** Left Hand: **DH4L**

Note: Right-hand enclosure cover hinged on left, left-hand enclosure cover hinged on right.

Accessories

Dress Nameplates: Required to meet automotive specifications. Mounts from inside enclosure and covers operating mechanism mounting bolts; makes mechanism non-removable when enclosure door is closed.

Description	Style Number
Dress Nameplate	**373D260G05**

Electrical Interlock Kit: Provides 1 N.C. and 1 N.O. contacts (SPDT switch) for use with auxiliary circuits. Mounts to end of mechanism housing as shown.

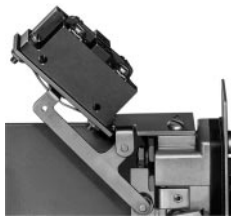

Description	Style Number
Electrical Interlock Kit	**622B747G01**

Auxiliary Latch Kits: Provide an additional latch for use with applications where two point latching may not be adequate.

Sliding Latch

Rolling Latch

Description	Style Number
For Door Hardware Using Sliding Latches	
Right- or Left-Hand Mounting	**622B747G01**
For Door Hardware Using Rolling Latches	
Right-Hand Mounting	**370D801G04**
Left-Hand Mounting	**370D802G04**

Door Operated Interlock Defeater Kit for Type SM Mechanisms

Required when door hardware is not used, operates as door closes. Additional method of securing door such as screw latch, also required (supplied by box manufacturer).

Description	Style Number
Door Operated Interlock Defeater Kit	**623B214G02**

Remote Mounting Kit (J-Frame)

Enables the operating mechanism to be mounted remotely on a vertical centerline from the circuit breaker or disconnect switch.

Description	Style Number
Remote Mounting Kit	**505C367G01**

Handle Extension

Handle extension is not included with J-, K-, L-, and M-Frame breakers. It must be purchased separately.

Frame	Catalog Number
J, K	**HEX3**
L, M	**HEX4**

Handle extension is included with breaker with N- and R-Frame breakers.

Frame	Catalog Number
N	**HEX5**
R	**HEX6**

Type LFD

The LFD current limiter is an accessory that bolts to the load end of a standard FDB or FD thermal-magnetic circuit breaker, providing 200,000A interrupting capacity at up to 600 Vac. LFD current limiters for thermal-magnetic circuit breakers are listed with Underwriters Laboratories, Inc., under File E47239.

Ordering Information

Circuit Breaker Rating Amperes①	Catalog Number
15-70	**LFD3070R**
80-160	**LFD3150R**

Instruction Leaflet/FRED Number 29C407

① Underwriters Laboratories Inc. listed under UL File E64983.

Ground Fault Alarm Unit

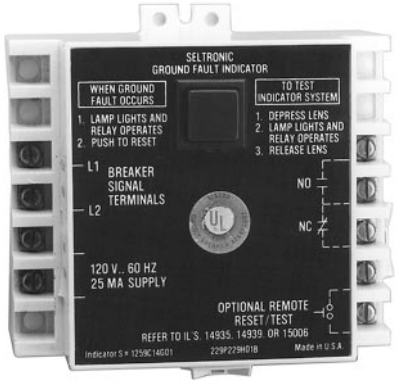

The Ground Fault Alarm Unit is a remotely mounted device with a combination indicating light/test button that will light when the breaker trips or alarms on ground fault. The Ground Fault Alarm Unit requires a separate 120 Vac power source to power the light and the internal relay which has 1 N.O. and 1 N.C. contacts for remote indication. The Ground Fault Alarm Unit can be panel mounted for ordering with an optional face mounting bracket. For use on Digitrip 310 only. K- through N-frame.

Ordering Information

Catalog Number
GFAU – Ground Fault Alarm Unit
Style Number
1264C67G01 – Face Mounting Bracket

Instruction Leaflet/FRED Number 29C614 Diagram

IQ Energy Sentinel

The IQ Energy Sentinel is a highly accurate, microprocessor-based, breaker-mounted device designed to monitor power and energy readings. It represents an alternative to watt meters, watt-hour meters, and watt demand meters. Key advantages include savings in space, lower installation costs, and remote monitoring capability.

The IQ Energy Sentinel mounts on the load side of a Series C F-frame (150 ampere) circuit breaker. It can be applied on three-phase, four-wire systems, or single-phase, three-wire systems with voltage connected through phases A and C.

Instruction Leaflet/FRED Number 17437

For more information see Descriptive Bulletin 8178.

Potential Transformer Module

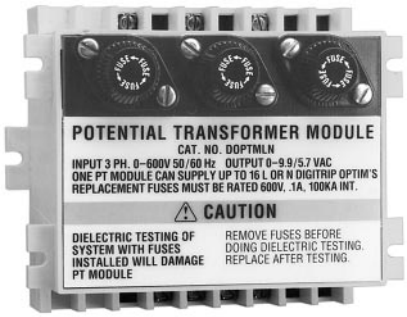

The Potential Transformer Module is required for Series C, Digitrip OPTIM 1050, to provide a voltage input to allow the trip unit to monitor power and energy as well as power factor. The Potential Transformer Module is a 6 VA transformer with a primary voltage input of up to 600V line to line. Three 0.1 ampere fuses are provided on the primary of the transformer and can be used for isolation purposes during dielectric testing. The device is normally panel mounted and can feed up to 16 OPTIM trip units.

Ordering Information

Description	Catalog Number
Potential Transformer Module	**DOPTMLN**

Instruction Leaflet/FRED Number 29C894 Diagram

Solid-State (Electronic) Portable Test Kit

The solid-state (electronic) portable test kit provides verification of performance of all ratings of Digitrip 310 electronic trip units installed in Series C circuit breakers while in service under varying load and/or phase imbalance. The test kit operates on 120-volt, 50/60 Hz power; it includes complete instructions and test times for testing long time, short time/instantaneous operation and optional ground fault operation of the circuit breaker.

Ordering Information

Description	Catalog Number
Solid-State (Electronic) Portable Test Kit	**STK2**

① Model 550 OPTIMs require the Cutler-Hammer PowerNet field upgrade kit.

Breaker Interface Module (BIM)

The Breaker Interface Module (BIM) is a panel mounted user interface device that is mounted on the front of an electrical assembly or at a remote location. The BIM is used to access, configure, test and display information for OPTIM trip units and other devices. The BIM consists of four display windows, eight function buttons, 18 LEDs, and a graphical time/current curve to provide breaker status, operational information, protection status and energy monitoring. A 24 Vdc power supply is required to provide power to the BIM. This is supplied by the switchboard builder to Cutler-Hammer specifications. The BIM is a member of the Cutler-Hammer PowerNet family of communicating devices that connects OPTIM trip units, Digitrip RMS 810/910 trip units and energy sentinels as a subnetwork system. The BIM can also be connected to a main network via a PONI module to Cutler-Hammer PowerNet software.

Ordering Information

Catalog Number
BIM

Instruction Leaflet/FRED Number 29C893

Digitrip OPTIMizer

The Digitrip OPTIMizer is a hand-held programmer that is used to access, configure, test and display information from OPTIM trip units. The OPTIMizer plugs into the front of an OPTIM trip unit via an eight-pin telephone jack and is powered by a nine-volt battery or the auxiliary power module. In addition, a three-pin INCOM network connection is also provided to program other OPTIM devices on the system. An Auxiliary Power Module connection provides a trip test when control power is not present at the breaker. The OPTIMizer is supplied as a standard package to include the programmer, the eight-pin connection cord, battery and carrying case. The Auxiliary Power Module is optional.

Ordering Information

Catalog Number
OPTIMizer – Standard Package

Instruction Leaflet/FRED Number 29C892

Note: 24 Vdc Power Supply
A 24 Vdc power supply is required for all Digitrip OPTIM trip units that are required to communicate either on the main Cutler-Hammer PowerNet network or as a subnetwork to a BIM. The breaker's load is 45 mA of current. Typically one power supply is required per switchboard and can provide control power to a BIM and the OPTIM trip units. The 24 Vdc power supply should be an "isolated high quality" power supply with a "CE" label, and is normally provided by the switchboard manufacturer to Cutler-Hammer recommendations.

Auxiliary Power Module

The Auxiliary Power Module is a power supply requiring 120 Vac input at 50 or 60 Hz that provides a 32 Vdc output①. The Auxiliary Power Module provides control power for testing an OPTIM trip unit when other means of control power is not available or for continuous OPTIMizer operation versus temporary with a battery. The Auxiliary Power Module connects into the top of the Digitrip OPTIMizer via a keyed receptacle. The main application for the Auxiliary Power Module would be for the testing of a stand-alone non-communicating OPTIM breaker that ordinarily would not have control power.

Ordering Information

Catalog Number
PRTAAPM

Cutler-Hammer PowerNet Software

Series C Digitrip OPTIM trip units can communicate back to a central Personal Computer by installing Cutler-Hammer PowerNet software②. In addition other software packages are available to allow the user to configure the trip units as well as monitor system performance.

Instruction Leaflet/FRED Number 29C890

① The OPTIMizer can work off of 32 Vdc control power, although 24 Vdc is the standard on OPTIM breakers.
② Model 550 OPTIMS require the Cutler-Hammer PowerNet field upgrade kit.

Special Calibration①

Special non-UL-listed calibrations are available for certain ambient temperatures other than 40°C and for frequencies other than 50/60 Hz or Dc. Reduced interrupting ratings will apply for 400 Hz applications. Maximum thermal calibration is limited to 135A at 400 Hz.

Suffix H01 400 Hz.

See Application Data 29-160 for information regarding special conditions.

50°C Calibration①

Add suffix "V" to catalog number for complete breaker, listed above, when ordering listed ampere ratings for breakers to be used in 50°C ambients.

Moisture-Fungus Treatment

All Series C circuit breaker cases are molded from glass-polyester which does not support the growth of fungus. Any parts which are susceptible to the growth of fungus will require special treatment.

Suffix J01 Fungus Treated

Freeze-Tested Circuit Breakers

The circuit breakers may be ordered with freeze testing. This option uses special lubrication and mechanical operation is verified at -40°C.

Suffix F01 Freeze Tested.

Marine Applications

F-Frame circuit breakers can be supplied to meet the following marine specifications:

U.S. Coast Guard CFR 46 ABS – American Bureau of Shipping
IEEE 45

These specifications generally require molded case circuit breakers to be supplied with 50°C ambient calibration, special nameplating, and plug-in adapter kits. When plug-in adapter kits are used, no terminals need be supplied.

Series C circuit breakers can also be supplied to meet UL489 Supplement SA (Marine Use) and UL489 Supplement SB (Naval Use).

UL489 Supplement SA applies to vessels over 65 feet in length. Requirements include 40°C ambient calibration, special labeling, and no use of aluminum conductors or terminals.

Suffix H08 "Marine."

UL489 Supplement SB requires 50°C ambient calibration, vibration testings, special nameplating and no use of aluminum conductors or terminals.

Suffix H09 "Naval."

① Not listed with Underwriters Laboratories, Inc.
② For use with standard 35 mm DIN rail such as, 35 x 7.5 or 15 mm per DIN EN50022.

NEMA 1 General Purpose

Surface or Flush Mounting
15-1200 Ampere Range
600 Volts Ac, 500 Volts Dc

NEMA 1 enclosed breakers are designed for indoor use in commercial buildings, apartment buildings and other areas where a general purpose enclosure is applicable. The breaker is front operable and is capable of being padlocked in the Off position. (Padlocking not available on enclosures for Quicklag® breakers.) Ratings through 1200 amperes are listed with Underwriters Laboratories, Inc. as suitable for service entrance application. Both surface and flush mounted enclosures are available. UL File Number E7819. CSA File Number LR84319.

NEMA 3R Rainproof Surface Mounting

Interchangeable Hubs (through 400 amperes)15-1200 Ampere Range
600 Volts Ac, 500 Volts Dc

This general purpose outdoor service center employs a circuit breaker inside a weatherproof sheet steel enclosure to serve as a main disconnect and protective device for feeder circuits. The operating handle can be padlocked in the Off position, and is interlocked to prevent the door from opening when the breaker is On. Ratings through 1200 amperes are listed by Underwriters Laboratories, Inc. as suitable for service entrance application. UL File Number E7819. CSA File Number LR84319.

NEMA 4/4X, 5 Water and Dustproof

Stainless Steel – Type 304
Surface Mounting
15-1200 Ampere Range
600 Volts Ac, 500 Volts Dc

This enclosure meets NEMA 4/4X and 5 requirements for water and dustproof applications and has no knockouts or other openings. It is particularly well suited for use in dairies, borax mines, breweries, paper mills and other process industries. The operating handle can be padlocked in the Off position, and is interlocked to prevent the door from opening when the breaker is On. Ratings through 1200 amperes are Underwriters Laboratories, Inc. listed as suitable for service entrance application. UL File Number E7819. CSA File Number LR84319.

NEMA 12 Dustproof Surface Mounting

No Knockouts or Other Openings
15-1200 Ampere Range
600 Volts Ac, 500 Volts Dc

The Type 12 enclosure is designed in line with specifications for special industry application where unusually severe conditions involving oil, coolant, dust and other foreign materials exist in the operating atmosphere. The handle padlocks in the Off position and the cover is interlocked with the handle mechanism to prevent opening the cover with the circuit breaker in the On position. Ratings through 1200 amperes are listed by Underwriters Laboratories, Inc. as suitable for service entrance application. A NEMA 12 semi-dust-tight design which includes knockouts is available. These units are rated 15-400 amperes, 600 volts Ac, 500 volts Dc. UL File Number E7819. CSA File Number LR84319.

NEMA 7, 9 Hazardous Location

Cast Aluminum, Explosionproof
Surface Mounting
15-800 Ampere Range
600 Volts Ac, 250 Volts Dc

Hazardous location, Class I, Groups B (except XFDN050), C, D; Class II, Groups E, F, G. This special service cast aluminum enclosure is supplied with a wide, machined flanged cover to prevent igniting outside atmospheres by arcing from inside the enclosure. Front operable, the handle padlocks in the Off position. Enclosures rated 600 amperes and above have lift-off hinges for ease of assembly. UL and cUL File Number E71279.

Enclosure Only Catalog Numbers Selection Guide①

Breaker Frame	Breaker Ampere Range	Enclosure NEMA Class	Enclosure Catalog Number
Series C® Breakers			
GC, GHC, GD 2- and 3-Pole only GHCGFEP② 1-Pole Only	15-100	1 Surface 3R 12 12K 4/4X, 5 St. Steel	**SGDN100②** **RGDN100** **JGDN100** **DGDN100** **WGDN100**
EHD, FD, FDB, HFD, FDC	15-100	1 Surface 1 Flush 3R 12 12K 4/4X, 5 St. Steel	**SFDN100** **FFDN100** **RFDN100** **JFDN100** **DFDN100** **WFDN100**
EHD, FD, FDB HFD, FDC	15-50 60-225④	7/9 Cast Aluminum 7/9 Cast Aluminum	**XFDN050** **XFDN225**
FD, FDB, HFD, FDC, ED, EDH, EDC	125-225	1 Surface 1 Flush 3R 12 12K 4/4X, 5 St. Steel	**SFDN225** **FFDN225** **RFDN225** **JFDN225** **DFDN225** **WFDN225**
JD, JDB, HJD, JDC	125-250	1 Surface 1 Flush 3R 12 12K 4/4X, 5 St. Steel	**SJDN250** **FJDN250** **RJDN250** **JJDN250** **DJDN250** **WJDN250**
JD, JDB, HJD, JDC	125-250	7/9 Cast Aluminum	**XJDN250**
KD, KDB, HKD, KDC, DK	125-400	1 Surface 1 Flush 3R 12 12K 4/4X, 5 St. Steel	**SKDN400** **FKDN400** **RKDN400** **JKDN400** **DKDN400** **WKDN400**
KD, KDB, HKD, KDC, DK	125-400	7/9 Cast Aluminum	**XKDN400**
LD, LDB, HLD, LDC	300-600	1 Surface 3R 12 4/4X, 5 St. Steel	**SLDN600** **RLDN600** **JLDN600** **WLDN600**
LD, LDB, HLD, LDC MD, MDS	300-600 400-800	7/9 Cast Aluminum	**XMCN800**
MD, MDS, ND, NDC, HND	400-1200	1 Surface 3R 12 4/4X, 5 St. Steel	**SNDN1200** **RNDN1200** **JNDN1200** **WNDN1200**
ND, HND, NDC		7/9 Cast Aluminum	**XNDN1200**
Earth Leakage Breakers⑤			
ELFD, ELHFD and ELFDC (3-Pole Only)	15-100	1 Surface 1 Flush 3R 12 12K 4/4X	**SFD100E** **FFD100E** **RFDN100E** **JFDN100E** **DFDN100E** **WFDN100E**
Current Limit-R Breakers			
FCL	15-100	3R 12 12K 4/4X, 5 St. Steel	**RFDN150** **JFDN150** **DFDN150** **WFDN150**
LCL⑥	125-400	1 Surface 3R 12 4/4X, 5 St. Steel	**SNDN1200** **RNDN1200** **JNDN1200** **WNDN1200**
TRI-PAC® Breakers			
FB-P	15-100	3R 12 12K 4/4X, 5 St. Steel	**RFDN150** **JFDN150** **DFDN150** **WFDN150**
LA-P⑦	70-400	1 Surface 3R 12 4/4X	**SNDN1200** **RNDN1200** **JNDN1200** **WNDN1200**
NB-P	500-800	12 4/4X, 5 St. Steel	**JNDPN800** **WNDPN800**

Neutral Kits, Insulated and Groundable⑧

Maximum Enclosure Rating (Amperes)	Main Lug Size Cu/Al	Ground Lug Size Cu/Al	Catalog Number
100	(1) 14–1/0	(1) 14–1/0	**INK100**
250	(1) 6–350 kcmil	(1) 4–300 kcmil	**INK250**
400	(1) 4–750 kcmil or (2) 1/0–250 kcmil	(1) 4–300 kcmil	**INK400**
600	(2) 250–500 kcmil	(1) 4–300 kcmil	**INK600**
1200	(3) 1/0 to 750 kcmil or (4) 1/0 to 750 kcmil	(1) #6–250 kcmil	**INK1200**

Raintight Hubs

All rainproof enclosures 30A through 400A are shipped with plate over cutout. Hubs are not supplied with screws on 30A through 400A enclosures. Use screws from plate.

Hub Diameter in Inches		Catalog Number
Small Hubs		
For use with RGDN and RFDN	3/4 1 1-1/4 1-1/2 2	**DS075H1** **DS100H1** **DS125H1** **DS150H1** **DS200H1**
Large Hubs		
For use with RJDN. (RKDN has two cutouts)	2 2-1/2 3	**R1H200** **R1H250** **R1H300**
Required if using Type DS hubs on RJDN and RKDN enclosures.		**R1HA**

Breather and Drain, Hazardous Enclosures⑤

Description	Compliance	Conduit Opening	Catalog Number
A Universal Breather/ Drain Fitting is installed in the top of an enclosure to provide ventilation to minimize condensation and in the bottom to allow drainage of accumulated condensation while maintaining explosion proof integrity.	Type BD: NEMA 7 – Class I, Groups C, D; Class I, Zone 1, Group IIB NEMA 9 – Class II, Groups F, G	1/2	**XPBD2**
	Type DBB: NEMA 7 – Class I, Groups B, C, D; Class I, Zone 1, Group IIB + Hydrogen NEMA 9 – Class II, Groups E, F, G	1/2	**XPDBB50**

① Enclosures only shown above; if an assembled enclosed circuit breaker is required refer to Cutler-Hammer Satellite.
② Suitable for use with one-pole breaker base mounting plate kit. QCCBP required.
③ Enclosure must have date stamp later than 4-15-98.
④ Maximum wire size: 4/0.
⑤ Availability to be announced.
⑥ LCL requires additional adapter plate 1223C06G01.
⑦ LA-P requires additional adapter plate S/N 1223C06G02.
⑧ If ground fault protection is required, contact regional satellite.

Dimensions and Shipping Weights

Not to be used for construction purposes unless approved.
Inches and Millimeters.

NEMA 1 Surface Mounted

Catalog Number	App. Wt. Lbs.	Max. Amperes	Dimensions A Inches	A mm	B Inches	B mm	C Inches	C mm	D Inches	D mm	E Inches	E mm	Conduit Sizes, Inches
SGDN100	12	100	17½	444	8 13/32	214	6 9/32	160	13 1/32	331	1 13/64	31	¼, ½, ¾, 1, 1¼, 1½, 2, 2½
SFDN100	12	100	17½	444	8 13/32	214	6 9/32	160	13 1/32	331	1 13/64	31	¼, ½, ¾, 1, 1¼, 1½, 2, 2½
SFDN150	15	150	23¼	591	8 13/32	214	6 9/32	160	18¾	476	1 13/64	31	¼, ½, ¾, 1, 1¼, 1½, 2, 2½
SFDN225	15	225	23¼	591	8 13/32	214	6 9/32	160	18¾	476	1 13/64	31	¼, ½, ¾, 1, 1¼, 1½, 2, 2½
SJDN250	31	250	34 45/64	881	10 59/64	227	7 13/64	183	30	762	1⅞	48	¼, ½, 2, 2½, 3
SKDN400	53	400	38 13/16	986	11 1/16	281	10 15/16	278	34	869	2 9/32	58	¼, ½, ¾, 1½, 2, 2½, 3, 3½
SLDN600	81	600	45⅞	1165	14 5/16	364	12⅜	314	46 5/16	1183	1 29/32	48	¼, ½, ¾, 3, 3½, 4
SNDN1200	178	1200	61 7/32	1555	21 7/16	545	15 13/32	391	61 27/32	1571	1 31/32	50	

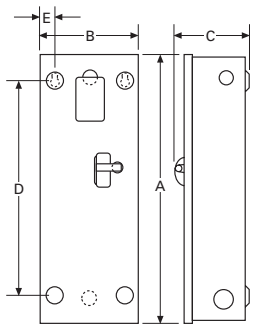

NEMA 1 Flush Mounted

FFDN100	12	100	18 13/16	478	9 23/32	247	6 9/32	160	13 1/32	331	1 55/64	47	¼, ½, ¾, 1, 1¼, 1½, 2, 2½
FFDN150	15	150	24 9/16	624	9 23/32	247	6 9/32	160	18¾	476	1 55/64	47	¼, ½, ¾, 1, 1¼, 1½, 2, 2½
FFDN225	15	225	24 9/16	624	9 23/32	247	6 9/32	160	18¾	476	1 55/64	47	¼, ½, ¾, 1, 1¼, 1½, 2, 2½
FJDN250	32	250	36 1/64	915	12 15/64	311	7 13/64	183	30	762	1⅞	48	¼, ½, 2, 2½, 3
FKDN400	53	400	40⅛	1019	12⅜	314	10 15/16	278	34	869	2 15/16	75	¼, ½, ¾, 1½, 2, 2½, 3, 3½

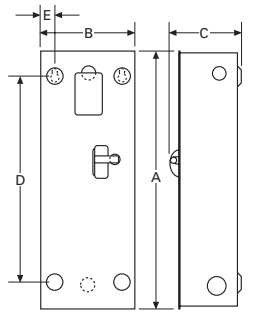

NEMA 12, 12K Dustproof

JGDN100	14	100	19 29/32	506	8 27/32	225	9 5/16	237	18 17/32	471	1 45/64	43	
JFDN100	14	100	19 29/32	506	8 27/32	225	9 5/16	237	18 17/32	471	1 45/64	43	
JFDN150	18	150	25 21/32	652	8 27/32	225	9 5/16	237	24 9/32	617	1 45/64	43	
JFDN225	18	225	25 21/32	652	8 27/32	225	9 5/16	237	24 9/32	617	1 45/64	43	
JJDN250	37	250	37 17/32	953	11 9/16	294	10 7/32	260	35 49/64	909	1 15/16	49	
JKDN400	58	400	41 11/16	1059	11¾	298	14 1/16	357	39 15/16	1014	1 31/32	150	
JLDN600	81	600	48 5/16	1227	14 29/32	379	15½	394	46 9/16	1183	1 59/64	49	
JNDPN800	110	800	63 19/32	1545	22	559	17⅝	448	–	–	–	–	
JNDN1200	170	1200	63 19/32	1545	22	559	17⅝	448	61 27/32	1571	1 31/32	50	
DGDN100	16	100	19 29/32	506	8 27/32	225	9 5/16	237	–	–	–	–	¼, ½, ¾, 1, 1¼,1½, 2, 2½
DFDN100	16	100	19 29/32	506	8 27/32	225	9 5/16	237	–	–	–	–	¼, ½, ¾, 1, 1¼,1½, 2, 2½
DFDN150	19	150	25 21/32	652	8 27/32	225	9 5/16	237	–	–	–	–	¼, ½, ¾, 1, 1¼,1½, 2, 2½
DFDN225	19	225	25 21/32	652	8 27/32	225	9 5/16	237					¼, ½, ¾, 1, 1¼,1½, 2, 2½
DJDN250	36	250	37 17/32	953	11 9/16	294	10 7/32	260	–	–	–	–	¼, ½, 2, 2½, 3
DKDN400	53	400	41 11/16	1059	11¾	298	14 1/16	357	–	–	–	–	¼, ½, ¾, 1½, 2, 2½, 3, 3½

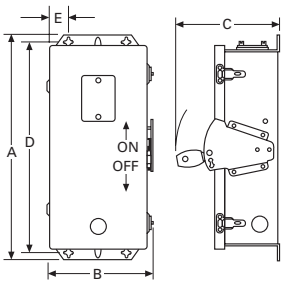

NEMA 3R Rainproof

RGDN100	14	100	19 29/32	458	8 27/32	225	9 5/16	237	18 17/32	471	1 45/64	43	¼, ½, ¾, 1, 1¼, 2, 2½
RFDN100	14	100	19 29/32	458	8 27/32	225	9 5/16	237	18 17/32	471	1 45/64	43	¼, ½, ¾, 1, 1¼, 2, 2½
RFDN150	19	150	25 21/32	603	8 27/32	225	9 5/16	237	24 9/32	617	1 45/64	43	¼, ½, ¾, 1, 1¼, 2, 2½
RFDN225	19	225	25 21/32	603	8 27/32	225	9 5/16	237	24 9/32	617	1 45/64	43	¼, ½, ¾, 1, 1¼, 2, 2½
RJDN250	40	250	37½	891	11 9/16	294	10 7/32	260	35 49/64	909	1 15/16	49	¼, ½, 2, 2½, 3
RKDN400	60	400	41 11/16	997	11¾	298	14 1/16	357	39 15/16	1014	1 31/32	50	¼, ½, ¾, 2½, 3, 3½
RLDN600	84	600	48 5/16	1227	14 29/32	379	15½	394	46 9/16	1183	1 59/64	49	¼, ½, ¾, 3, 3½, 4
RNDN1200	175	1200	63 19/32	1615	22	559	17⅝	448	61 27/32	1571	1 31/32	50	

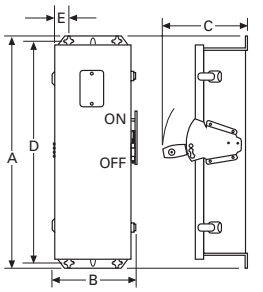

(Continued)

Dimensions and Shipping Weights

Not to be used for construction purposes unless approved.
Inches and Millimeters.

NEMA 4/4X, 5 Stainless Steel

Catalog Number	App. Wt. Lbs.	Max. Amperes	Dimensions A Inches	A mm	B Inches	B mm	C Inches	C mm	D Inches	D mm	E Inches	E mm
WGDN100	16	100	19 29/32	506	8 27/32	225	9 5/16	237	18 17/32	471	1 45/64	43
WFDN100	16	100	19 29/32	506	8 27/32	225	9 5/16	237	18 17/32	471	1 45/64	43
WFDN150	20	150	25 21/32	652	8 27/32	225	9 5/16	237	24 9/32	617	1 45/64	43
WFDN225	20	225	25 21/32	652	8 27/32	225	9 5/16	237	24 9/32	617	1 45/64	43
WJDN250	39	250	37 1/2	953	11 9/16	294	10 7/32	260	35 45/64	909	1 15/16	49
WKDN400	60	400	41 11/16	1059	11 3/4	298	14 1/16	357	39 15/16	1014	1 31/32	50
WLDN600	88	600	48 5/16	1227	14 29/32	379	15 1/2	394	46 9/16	1183	1 59/64	49
WNDN1200	185	1200	63 19/32	1545	22	559	17 5/8	448	61 27/32	1571	1 31/32	50

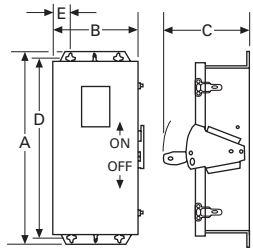

NEMA 4/4X, 5 Stainless Steel

Catalog Number	Breaker Size (Amperes)	Overall Enclosure A	B	C	D	Enclosure Mounting E	F	G	Conduit H	I	Hinged Cover J	Standard Conduit Size	Location	Weight (lbs.)	Dia. No.
XFDN050	50	15	10 5/8	8 3/4	5 13/16	9	12	1/2	1 3/4	3 1/4	2 5/8	1 1/4	2 & 7	34	1
XFDN225	100/225	25 1/2	12 1/2	10 1/8	7 5/8	10 1/2	20	1/2	2	3 1/4	4 3/4	2	2 & 7	70	1
XJDN250	250	38 1/2	13	11 1/4	8 3/4	11 1/2	28	1/2	2 1/8	3 1/2	5 1/2	2 1/2	2 & 7	120	1
XKDN400	400	44 3/4	18	12 3/8	9 7/8	10	45	1/2	3	4	5 1/2	3	1, 3 & 6, 8	180	2
XMCN800	600/800	50 3/4	20 3/4	15	12 1/2	22	40	1/2	4	5	6	4	1, 3 & 6, 8	460	3
XNDN1200	1200①	65	25	15 1/4	12 3/4	23 1/2	50	1/2	6 1/2	4 3/4	7	4	1, 3 & 6, 8	600	3

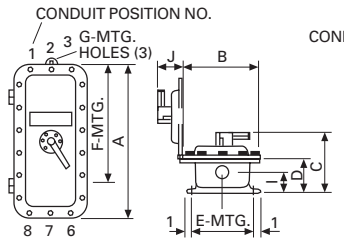

Diagram 1

Conduit Openings
Refer to outline dimensions for size and location of standard conduit openings. In addition, ½-inch openings are drilled and tapped for breather and drain. Unless ordered with breather and drain, these openings are plugged. Refer to Cutler-Hammer for list price of breather and drain.

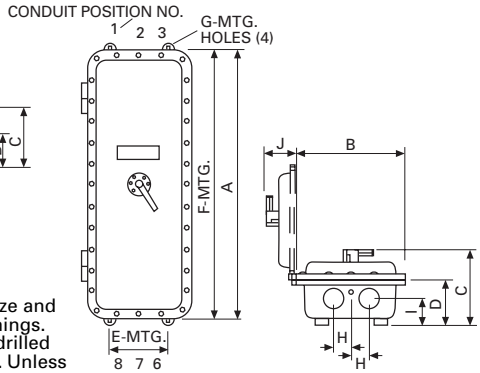

Diagram 2

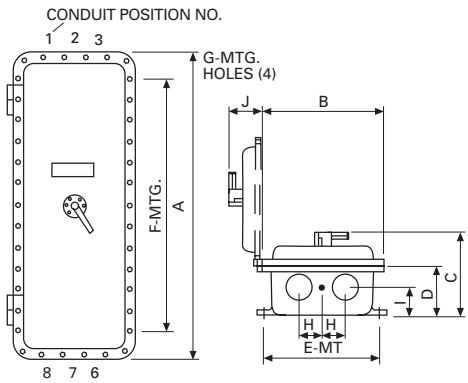

Diagram 3

Circuit Breaker Enclosure Interpretation Data

1st Field Enclosure Type			2nd Field Breaker Family	3rd Field Maximum Ampacity
NEMA 1	Flush	F	G-Frame	50
	Surface	S	F-Frame	100
NEMA 3R		R	J-Frame	150
NEMA 12		J	K-Frame	225
NEMA 12K		D	L-Frame	250
NEMA 4, 4X, 5	Stainless	W	M-Frame	400
NEMA 7/9	Cast Al.	X	N-Frame	600
				1200

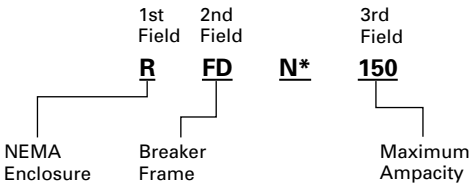

* "N" in this position indicates enclosure complies with 1981 NEC gutter space requirement.

① Power cables must enter and leave from opposite ends (through feed).

Standards

Series C® molded case circuit breakers are designed to conform with the following standards:

- Underwriters Laboratories, Inc., Standard UL 489, Molded Case Circuit Breakers and Circuit Breaker Enclosures
- National Electrical Manufacturers Association Standards Publication No. AB1-1993, Molded Case Circuit Breakers
- Australian Standard AS 2184, Molded Case Circuit Breakers
- British Standards Institution Standard BS 4752: Part 1, Switchgear and Control Gear Part 1: Circit Breakers
- Canadian Standards Association Standard C22.2 No. 5, Service Entrance and Branch Circuit Breakers
- International Electrotechnical Commission Recommendations IEC 157-1, Circuit Breakers
- Japanese T-Mark Standard Molded Case Circuit Breakers
- South African Bureau of Standards, Standard SABS 156, Standard Specification for Molded Case Circuit Breakers
- Swiss Electro-Technical Association Standard SEV 157-1, Safety Regulations for Circuit Breakers
- Union Technique de l'Electricite Standard NF C 63-120, Low Voltage Switchgear and Control Gear Circuit Breaker Requirements
- Verband Deutscher Elektrotechniker (Association of German Electrical Engineers) Standard VDE 0660, Low Voltage Switchgear and Control Gear, Circuit Breakers

Conformance with these standards satisfies most local and international codes, assuming user acceptability and simplified application.

Series C molded case circuit breakers equal or exceed Federal Specification Classification W-C-375b requirements for the particular class associated with the circuit breaker frame being considered.

Further Information

Circuit Breaker
CD-ROM SA.74A.01.T.E

Navigation Chart of CD-ROM

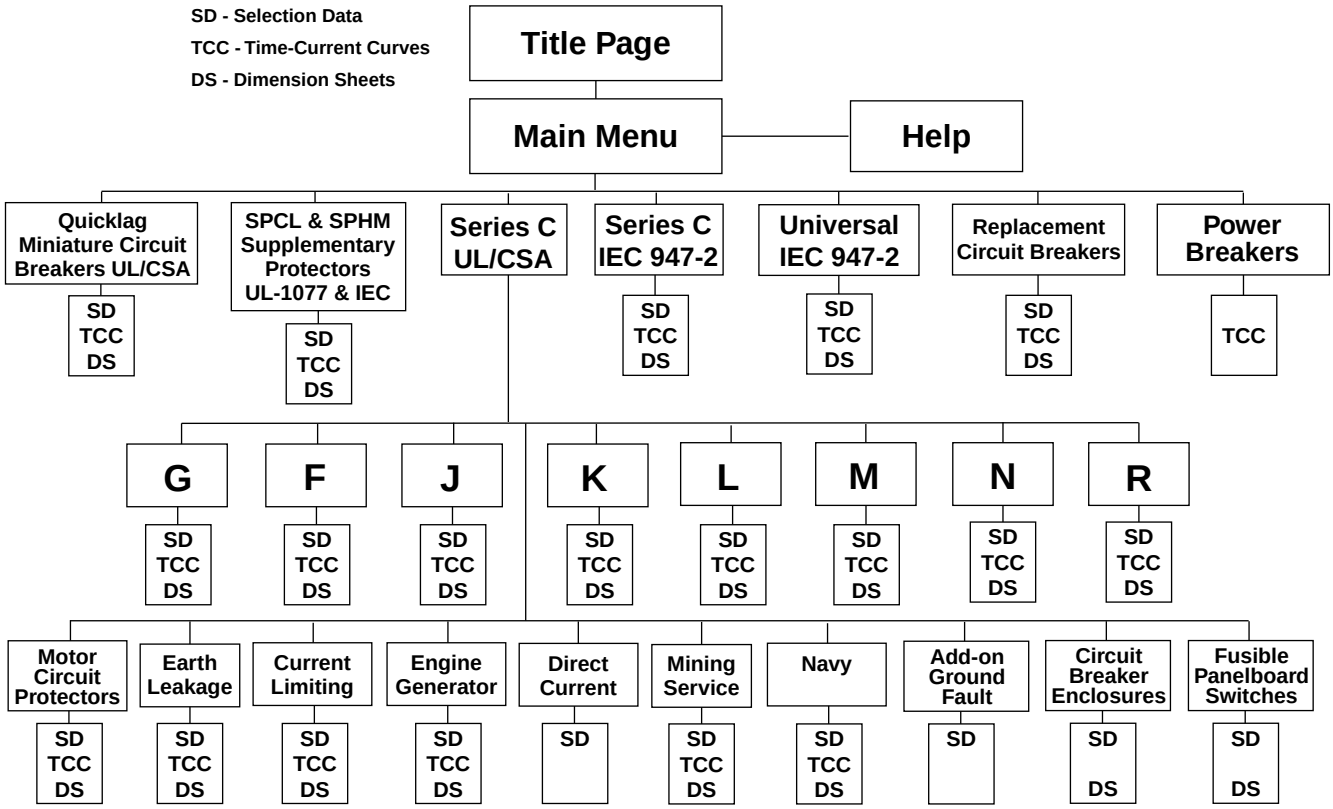

System Requirements

- Processor: 486 or faster (Pentium® or Pentium Pro recommended)
- Operating System: Microsoft Windows 95, Windows 98, Windows NT 3.5, or Windows NT 4.0
- Memory: 8 MB of available RAM (16 MB recommended)
- Available Hard Disk Storage Space: 12 MB
- Devices: a CD-ROM drive and a mouse
- Monitor: minimum 640 x 480 resolution and 8-bit color (256 colors)

Installation Instructions

- This is an autorun CD. Just insert this disk in the CD-ROM drive and wait for it to launch.

CD-ROM Installation Help Line: U.S.: 1-800-270-5134
Outside of the United States: Contact your local Cutler-Hammer sales office.

If the CD is not included in this Product Guide, contact Cutler-Hammer Fulfillment Center at 1-800-957-7050 and ask for SA.74A.01.T.E.