GR and GRF Conduit Outlet Boxes

Explosionproof, Dust-Ignitionproof

UNILETS® for use with Threaded Metal Conduit. Furnished with Internal Ground Screw and O-Ring.

Class I, Division 1 and 2, Groups B◆, C, D
Class II, Division 1 and 2, Groups E, F, G
Class III
NEMA 3, 4

Applications

- Complies with a wide range of classified area requirements.
- Corrosion-resistant: ideal indoors or out.
- For pulling of wires.
- Connect conduit lengths and change direction of conduit runs.
- Provide access for maintenance.

Features

- GR boxes offers ten hub arrangements.
- GRF boxes have integral mounting flange.
- Malleable iron bodies have high tensile strength, ductility and provides great resistance to corrosion, impact, and shock.
- Accurately tapped, tapered hub threads for tight, rigid joints and ground continuity.
- Furnished with covers.
- General purpose wiring.
- Function as sealing fittings when used with sealing covers (see NEC for restrictions).
- Internally threaded body with externally threaded cover.
- Covers have pry notches for bar or wrench.
- Accommodate sealing, dome, hub and union hub covers, and canopies.
- Standard O-rings provide raintight fit. NEMA 3, 4.
- Internal ground screw standard.
- Smooth, rounded integral bushing in each hub type box protects conductor insulation.

Standard Materials

- Body: malleable iron or copperfree (4/10 of 1% max.) aluminum
- Cover: copperfree (4/10 of 1% max.) aluminum

Standard Finishes

- Malleable iron bodies and covers: triple-coat — (1) zinc electroplate, (2) chromate, and (3) epoxy powder coat
- Aluminum bodies and covers: epoxy powder coat

Options

- To order body without cover, add suffix -**LC** to catalog number.
- For malleable iron body and cover, add suffix -**M**.
- PVC coating available on specified products. Add suffix -**PVC** to catalog number. To add PVC coating to items not specified, contact your local sales representative.

Certifications and Compliances

- Class 1, Zone 1 &2 IIA & IIB
- UL Listed: E10444
- CSA Standard: C22.2 No. 25, C22.2 No. 30
- CSA Certified: 013017

◆ *In Class I, Division 1, Group B atmospheres, all conduit runs must have a sealing fitting (not supplied) field-installed adjacent to the enclosure.*

© November 2011

GR Conduit Outlet Boxes

Explosionproof, Dust-Ignitionproof

UNILETS® for use with Threaded Metal Conduit. Furnished with Internal Ground Screw and O-Ring.

Class I, Division 1 and 2, Groups B◆, C, D
Class II, Division 1 and 2, Groups E, F, G
Class III
NEMA 3, 4

	Hub Type	Conduit Size (Inches)	Cover Opening Inches/Millimeters	Volume Capacity in³/dm³	Form Number ③	Catalog Number ① Malleable Iron ② Body With Aluminum Cover	Catalog Number ① Aluminum Body with Aluminum Cover
	GRE	1/2	3.38/85.9	18.0/.29	1	**GRE50**	**GRE50-A**
		3/4	3.38/85.9	18.0/.29	1	**GRE75**	**GRE75-A**
		1	3.38/85.9	18.0/.29	1	**GRE100**	**GRE100-A**
		1-1/4	3.94/100.1	31.0/.51	2	**GRE125**	**GRE125-A**
		1-1/2	4.88/124.0	72.0/1.18	3	**GRE150**	**GRE150-A**
	GRC ④	1/2	3.38/85.9	18.0/.29	1	**GRC50**	**GRC50-A**
		3/4	3.38/85.9	18.0/.29	1	**GRC75**	**GRC75-A**
		1	3.38/85.9	18.0/.29	1	**GRC100**	**GRC100-A**
		1-1/4	3.94/100.1	31.0/.51	2	**GRC125**	**GRC125-A**
		1-1/2	4.88/124.0	72.0/1.18	3	**GRC150**	**GRC150-A**
		2	4.88/124.0	76.0/1.25	3	**GRC200**	**GRC200-A**
	GRL ④	1/2	3.38/85.9	18.0/.29	1	**GRL50**	**GRL50-A**
		3/4	3.38/85.9	18.0/.29	1	**GRL75**	**GRL75-A**
		1	3.38/85.9	18.0/.29	1	**GRL100**	**GRL100-A**
		1-1/4	3.94/100.1	31.0/.51	2	**GRL125**	**GRL125-A**
		1-1/2	4.88/124.0	72.0/1.18	3	**GRL150**	**GRL150-A**
		2	4.88/124.0	76.0/1.25	3	**GRL200**	**GRL200-A**
	GRLB ④	1/2	3.38/85.9	18.0/.29	1	**GRLB50**	**GRLB50-A**
		3/4	3.38/85.9	18.0/.29	1	**GRLB75**	**GRLB75-A**
		1	3.38/85.9	18.0/.29	1	**GRLB100**	**GRLB100-A**
		1-1/4	3.94/100.1	31.0/.51	2	**GRLB125**	**GRLB125-A**
		1-1/2	4.88/124.0	72.0/1.18	3	**GRLB150**	**GRLB150-A**
		2	4.88/124.0	76.0/1.25	3	**GRLB200**	**GRLB200-A**
	GRN ④	1/2	3.38/85.9	18.0/.29	1	**GRN50**	**GRN50-A**
		3/4	3.38/85.9	18.0/.29	1	**GRN75**	**GRN75-A**
		1	3.38/85.9	18.0/.29	1	**GRN100**	**GRN100-A**
		1-1/4	3.94/100.1	31.0/.51	2	**GRN125**	**GRN125-A**
		1-1/2	4.88/124.0	72.0/1.18	3	**GRN150**	**GRN150-A**
	GRT ④	1/2	3.38/85.9	18.0/.29	1	**GRT50**	**GRT50-A**
		3/4	3.38/85.9	18.0/.29	1	**GRT75**	**GRT75-A**
		1	3.38/85.9	18.0/.29	1	**GRT100**	**GRT100-A**
		1-1/4	3.94/100.1	31.0/.51	2	**GRT125**	**GRT125-A**
		1-1/2	4.88/124.0	72.0/1.18	3	**GRT150**	**GRT150-A**
		2	4.88/124.0	76.0/1.25	3	**GRT200**	**GRT200-A**
	GRX ④	1/2	3.38/85.9	18.0/.29	1	**GRX50**	**GRX50-A**
		3/4	3.38/85.9	18.0/.29	1	**GRX75**	**GRX75-A**
		1	3.38/85.9	18.0/.29	1	**GRX100**	**GRX100-A**
		1-1/4	3.94/100.1	31.0/.51	2	**GRX125**	**GRX125-A**
		1-1/2	4.88/124.0	72.0/1.18	3	**GRX150**	**GRX150-A**
		2	4.88/124.0	76.0/1.25	3	**GRX200**	**GRX200-A**

◆ In Class I, Division 1, Group B atmospheres, all conduit runs must have a sealing fitting (not supplied) field-installed adjacent to the enclosure.
① Other covers available—see GR and GRF Conduit Outlet Box Covers page. Order separately.
*② For malleable iron body and cover, add suffix **-M.***
*③ Form number designates body and matching cover sizes. To order body without cover, add suffix -**LC** to catalog number.*
*④ PVC coating available, add suffix -**PVC** to catalog number.*

© November 2011

GR Conduit Outlet Boxes

Explosionproof, Dust-Ignitionproof

UNILETS® for use with Threaded Metal Conduit. Furnished with Internal Ground Screw and O-Ring.

Class I, Division 1 and 2, Groups B◆, C, D
Class II, Division 1 and 2, Groups E, F, G
Class III
NEMA 3, 4

	Hub Type	Conduit Size (Inches)	Cover Opening Inches/Millimeters	Volume Capacity in³/dm³	Form Number ③	Catalog Number ① Malleable Iron ② Body With Aluminum Cover	Catalog Number ① Aluminum Body with Aluminum Cover
	GRCA	1/2	3.38/85.9	18.0/0.29	1	**GRCA50**	**GRCA50-A**
		3/4	3.38/85.9	18.0/0.29	1	**GRCA75**	**GRCA75-A**
	GRLA	1/2	3.38/85.9	18.0/0.29	1	**GRLA50**	**GRLA50-A**
		3/4	3.38/85.9	18.0/0.29	1	**GRLA75**	**GRLA75-A**
	GRTA	1/2	3.38/85.9	18.0/0.29	1	**GRTA50**	**GRTA50-A**
		3/4	3.38/85.9	18.0/0.29	1	**GRTA75**	**GRTA75-A**

Dimensions

Hub Size (Inches)	A	B	C	D	E	F	G
	Dimensions in Inches/Millimeters						
GR Series, Form 1							
1/2	3.75/95.3	2.44/62	2.88/73.2	0.75/19.1	0.81/20.6	2.25/57.2	1.25/31.8
3/4	3.75/95.3	2.44/62	2.88/73.2	0.75/19.1	0.81/20.6	2.25/57.2	1.25/31.8
1	3.75/95.3	2.44/62	2.88/73.2	0.94/23.9	0.94/23.9	2.25/57.2	1.06/26.9

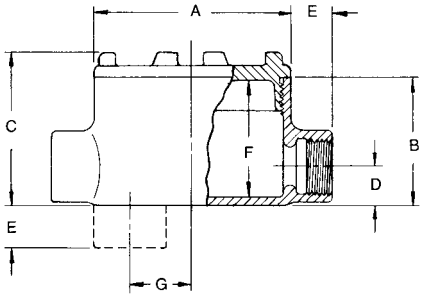

GR Series, Forms 2 and 3							
1-1/4	4.50/114.3	2.69/68.3	3.56/90.4	1.19/30.2	0.88/22.4	2.75/69.9	1.13/28.7
1-1/2	5.75/146.1	3.75/95.3	4.81/122.2	1.38/35.1	0.94/23.9	4.06/103.1	1.50/38.1
2	5.75/146.1	4.00/101.6	5.06/128.5	1.63/41.4	1/25.4	4.25/108.0	1.25/31.8

1-1/4" = Form 2
1-1/2" & 2" = Form 3

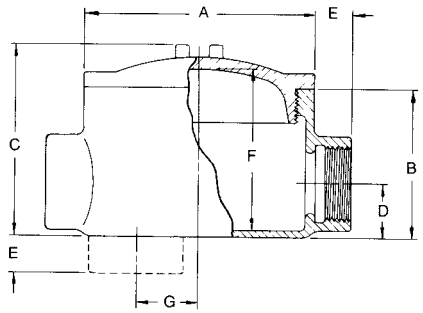

◆ *In Class I, Division 1, Group B atmospheres, all conduit runs must have a sealing fitting (not supplied) field-installed adjacent to the enclosure.*
① *Other covers available—see GR and GRF Conduit Outlet Box Covers page. Order separately.*
② *For malleable iron body and cover, add suffix* ***-M.***
③ *Form number designates body and matching cover sizes. To order body without cover, add suffix* ***-LC*** *to catalog number.*

© November 2011

GRF Flanged Conduit Outlet Boxes

Explosionproof, Dust-Ignitionproof

UNILETS® for use with Threaded Metal Conduit. Furnished with Internal Ground Screw and O-Ring.

Class I, Division 1 and 2, Groups B◆, C, D
Class II, Division 1 and 2, Groups E, F, G
Class III
NEMA 3, 4

	Hub Type	Conduit Size (Inches)	Cover Opening Inches/Millimeters	Capacity in³/dm³	Form Number ③	Catalog Number ① Malleable Iron ② Body With Aluminum Cover	Catalog Number ① Aluminum Body with Aluminum Cover
	GRFC	1/2	3.38/85.9	18.0/0.29	1	**GRFC50**	**GRFC50-A**
		3/4	3.38/85.9	18.0/0.29	1	**GRFC75**	**GRFC75-A**
		1	3.38/85.9	18.0/0.29	1	**GRFC100**	**GRFC100-A**
	GRFL	1/2	3.38/85.9	18.0/0.29	1	**GRFL50**	**GRFL50-A**
		3/4	3.38/85.9	18.0/0.29	1	**GRFL75**	**GRFL75-A**
		1	3.38/85.9	18.0/0.29	1	**GRFL100**	**GRFL100-A**
	GRFT	1/2	3.38/85.9	18.0/0.29	1	**GRFT50**	**GRFT50-A**
		3/4	3.38/85.9	18.0/0.29	1	**GRFT75**	**GRFT75-A**
		1	3.38/85.9	18.0/0.29	1	**GRFT100**	**GRFT100-A**
	GRFX	1/2	3.38/85.9	18.0/0.29	1	**GRFX50**	**GRFX50-A**
		3/4	3.38/85.9	18.0/0.29	1	**GRFX75**	**GRFX75-A**
		1	3.38/85.9	18.0/0.29	1	**GRFX100**	**GRFX100-A**

Dimensions

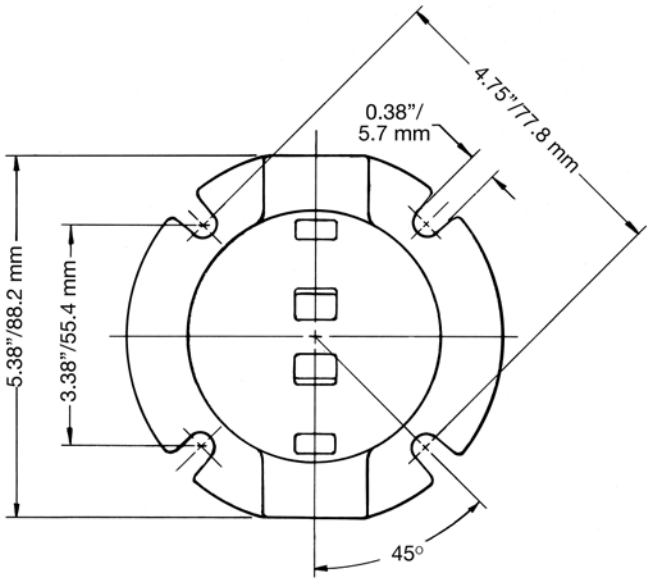

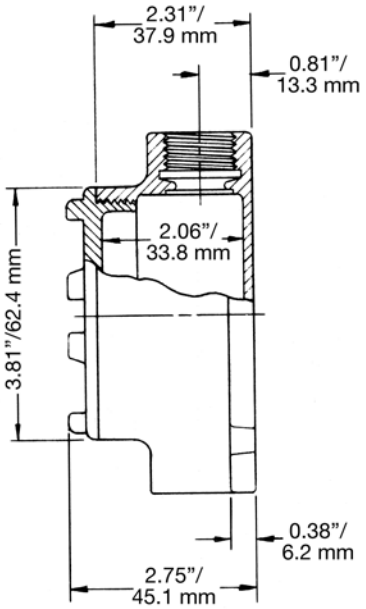

◆ *In Class I, Division 1, Group B atmospheres, all conduit runs must have a sealing fitting (not supplied) field-installed adjacent to the enclosure.*
① *Other covers available—see GR and GRF Conduit Outlet Box Covers page. Order separately*
② *For malleable iron body and cover, add suffix* ***-M.***
③ *Form number designates body and matching cover sizes. To order body without cover, add suffix* ***-LC*** *to catalog number.*

© November 2011

GR and GRF Conduit Outlet Box Covers

Explosionproof, Dust-Ignitionproof

Covers and O-rings Fit Bodies with Corresponding Form Numbers.

Class I, Division 1 and 2, Groups B◆, C, D
Class II, Division 1 and 2, Groups E, F, G
Class III
NEMA 3, 4

	Hub Type	Cover Opening Inches/Millimeters	Fixture Stem Size Inches/Millimeters	Form Number ①	Catalog Number Malleable Iron	Catalog Number Aluminum
	Surface ②	3.38/85.9		1	**GRK-1M**	**GRK-1**
		3.94/100.1		2	**GRK-2M**	**GRK-2**
		4.88/124.0		3	**GRK-3M**	**GRK-3**
	Sealing ②	3.38/85.9		1	**GRK-1SC**	**GRK-1SC-A**
		3.94/100.1		2	**GRK-2SC**	**GRK-2SC-A**
		4.88/124.0		3	**GRK-3SC**	**GRK-3SC-A**
	2” Deep Dome *UL Listed: E185964*	3.38/85.9		1	—	**GRK-1DC**
	Union Hub	3.38/85.9	0.75/19.1	1	**GRK-75U**	**GRK-75UA**
	Hub	3.38/85.9	0.50/12.7	1	**GRK-50**	**GRK50-A**
		3.38/85.9	0.75/19.1	1	**GRK-75**	**GRK75-A**
	Canopy Length 4-1/2”	3.38/85.9	0.50/12.7	1	**GRK-50C**	—
		3.38/85.9	0.75/19.1	1	**GRK-75C**	—
		3.38/85.9	1.00/25.4	1	**GRK-100C**	—

			Catalog Number
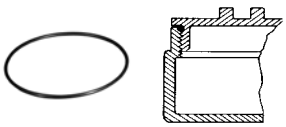	**O-Rings — Buna-N** Provide Raintight fit when used on following series: GR (Forms 1, 2 and 3), GRF (Form 1), GRH, and GRU (Form 1).	1	**GRG-1**
		2	**GRG-2**
		3	**GRG-3**
	GRTB Terminal Strip *For use in standard GR series boxes Weidmuller type MK terminal block ③ with wire range of #22-#12 AWG. Mounts on 2 predrilled and tapped standard holes (furnished in internal GR boxes).*		
	6 position terminal block kit	1+2	**GRTB6-12**
	6 position terminal block kit	3	**GRTB6-3**
	12 position terminal block kit	3	**GRTB12-3**

◆ In Class I, Division 1, Group B atmospheres, all conduit runs must have a sealing fitting (not supplied) field-installed adjacent to the enclosure.
① Form numbers designate cover and matching body sizes.
*② PVC coating available, add suffix -**PVC** to catalog number.*
③ Terminal block is UL listed for 300 Volt, 25 Amp. CSA certified for 300 Volt, 13 Amp.

© November 2011

GR and GRF Conduit Outlet Boxes

Explosionproof, Dust-Ignitionproof

UNILETS® for use with Threaded Metal Conduit. Furnished with Internal Ground Screw and O-Ring.

Class I, Division 1 and 2, Groups B◆, C, D
Class II, Division 1 and 2, Groups E, F, G
Class III
NEMA 3, 4

Applications

- Complies with a wide range of classified area requirements.
- Corrosion-resistant: ideal indoors or out.
- For pulling of wires.
- Connect conduit lengths and change direction of conduit runs.
- Provide access for maintenance.

Features

- GR boxes offers ten hub arrangements.
- GRF boxes have integral mounting flange.
- Malleable iron bodies have high tensile strength, ductility and provides great resistance to corrosion, impact, and shock.
- Accurately tapped, tapered hub threads for tight, rigid joints and ground continuity.
- Furnished with covers.
- General purpose wiring.
- Function as sealing fittings when used with sealing covers (see NEC for restrictions).
- Internally threaded body with externally threaded cover.
- Covers have pry notches for bar or wrench.
- Accommodate sealing, dome, hub and union hub covers, and canopies.
- Standard O-rings provide raintight fit. NEMA 3, 4.
- Internal ground screw standard.
- Smooth, rounded integral bushing in each hub type box protects conductor insulation.

Standard Materials

- Body: malleable iron or copperfree (4/10 of 1% max.) aluminum
- Cover: copperfree (4/10 of 1% max.) aluminum

Standard Finishes

- Malleable iron bodies and covers: triple-coat — (1) zinc electroplate, (2) chromate, and (3) epoxy powder coat
- Aluminum bodies and covers: epoxy powder coat

Options

- To order body without cover, add suffix -**LC** to catalog number.
- For malleable iron body and cover, add suffix -**M**.
- PVC coating available on specified products. Add suffix -**PVC** to catalog number. To add PVC coating to items not specified, contact your local sales representative.

Certifications and Compliances

- Class 1, Zone 1 &2 IIA & IIB
- UL Listed: E10444
- CSA Standard: C22.2 No. 25, C22.2 No. 30
- CSA Certified: 013017

◆ *In Class I, Division 1, Group B atmospheres, all conduit runs must have a sealing fitting (not supplied) field-installed adjacent to the enclosure.*

© November 2011

GR Conduit Outlet Boxes

Explosionproof, Dust-Ignitionproof

UNILETS® for use with Threaded Metal Conduit. Furnished with Internal Ground Screw and O-Ring.

Class I, Division 1 and 2, Groups B◆, C, D
Class II, Division 1 and 2, Groups E, F, G
Class III
NEMA 3, 4

	Hub Type	Conduit Size (Inches)	Cover Opening Inches/Millimeters	Volume Capacity in³/dm³	Form Number ③	Catalog Number ① Malleable Iron ② Body With Aluminum Cover	Catalog Number ① Aluminum Body with Aluminum Cover
	GRE	1/2	3.38/85.9	18.0/.29	1	**GRE50**	**GRE50-A**
		3/4	3.38/85.9	18.0/.29	1	**GRE75**	**GRE75-A**
		1	3.38/85.9	18.0/.29	1	**GRE100**	**GRE100-A**
		1-1/4	3.94/100.1	31.0/.51	2	**GRE125**	**GRE125-A**
		1-1/2	4.88/124.0	72.0/1.18	3	**GRE150**	**GRE150-A**
	GRC ④	1/2	3.38/85.9	18.0/.29	1	**GRC50**	**GRC50-A**
		3/4	3.38/85.9	18.0/.29	1	**GRC75**	**GRC75-A**
		1	3.38/85.9	18.0/.29	1	**GRC100**	**GRC100-A**
		1-1/4	3.94/100.1	31.0/.51	2	**GRC125**	**GRC125-A**
		1-1/2	4.88/124.0	72.0/1.18	3	**GRC150**	**GRC150-A**
		2	4.88/124.0	76.0/1.25	3	**GRC200**	**GRC200-A**
	GRL ④	1/2	3.38/85.9	18.0/.29	1	**GRL50**	**GRL50-A**
		3/4	3.38/85.9	18.0/.29	1	**GRL75**	**GRL75-A**
		1	3.38/85.9	18.0/.29	1	**GRL100**	**GRL100-A**
		1-1/4	3.94/100.1	31.0/.51	2	**GRL125**	**GRL125-A**
		1-1/2	4.88/124.0	72.0/1.18	3	**GRL150**	**GRL150-A**
		2	4.88/124.0	76.0/1.25	3	**GRL200**	**GRL200-A**
	GRLB ④	1/2	3.38/85.9	18.0/.29	1	**GRLB50**	**GRLB50-A**
		3/4	3.38/85.9	18.0/.29	1	**GRLB75**	**GRLB75-A**
		1	3.38/85.9	18.0/.29	1	**GRLB100**	**GRLB100-A**
		1-1/4	3.94/100.1	31.0/.51	2	**GRLB125**	**GRLB125-A**
		1-1/2	4.88/124.0	72.0/1.18	3	**GRLB150**	**GRLB150-A**
		2	4.88/124.0	76.0/1.25	3	**GRLB200**	**GRLB200-A**
	GRN ④	1/2	3.38/85.9	18.0/.29	1	**GRN50**	**GRN50-A**
		3/4	3.38/85.9	18.0/.29	1	**GRN75**	**GRN75-A**
		1	3.38/85.9	18.0/.29	1	**GRN100**	**GRN100-A**
		1-1/4	3.94/100.1	31.0/.51	2	**GRN125**	**GRN125-A**
		1-1/2	4.88/124.0	72.0/1.18	3	**GRN150**	**GRN150-A**
	GRT ④	1/2	3.38/85.9	18.0/.29	1	**GRT50**	**GRT50-A**
		3/4	3.38/85.9	18.0/.29	1	**GRT75**	**GRT75-A**
		1	3.38/85.9	18.0/.29	1	**GRT100**	**GRT100-A**
		1-1/4	3.94/100.1	31.0/.51	2	**GRT125**	**GRT125-A**
		1-1/2	4.88/124.0	72.0/1.18	3	**GRT150**	**GRT150-A**
		2	4.88/124.0	76.0/1.25	3	**GRT200**	**GRT200-A**
	GRX ④	1/2	3.38/85.9	18.0/.29	1	**GRX50**	**GRX50-A**
		3/4	3.38/85.9	18.0/.29	1	**GRX75**	**GRX75-A**
		1	3.38/85.9	18.0/.29	1	**GRX100**	**GRX100-A**
		1-1/4	3.94/100.1	31.0/.51	2	**GRX125**	**GRX125-A**
		1-1/2	4.88/124.0	72.0/1.18	3	**GRX150**	**GRX150-A**
		2	4.88/124.0	76.0/1.25	3	**GRX200**	**GRX200-A**

◆ In Class I, Division 1, Group B atmospheres, all conduit runs must have a sealing fitting (not supplied) field-installed adjacent to the enclosure.
① Other covers available—see GR and GRF Conduit Outlet Box Covers page. Order separately.
*② For malleable iron body and cover, add suffix **-M.***
*③ Form number designates body and matching cover sizes. To order body without cover, add suffix -**LC** to catalog number.*
*④ PVC coating available, add suffix -**PVC** to catalog number.*

© November 2011

GR Conduit Outlet Boxes

Explosionproof, Dust-Ignitionproof

UNILETS® for use with Threaded Metal Conduit. Furnished with Internal Ground Screw and O-Ring.

Class I, Division 1 and 2, Groups B◆, C, D
Class II, Division 1 and 2, Groups E, F, G
Class III
NEMA 3, 4

	Hub Type	Conduit Size (Inches)	Cover Opening Inches/Millimeters	Volume Capacity in³/dm³	Form Number ③	Catalog Number ① Malleable Iron ② Body With Aluminum Cover	Catalog Number ① Aluminum Body with Aluminum Cover
	GRCA	1/2	3.38/85.9	18.0/0.29	1	**GRCA50**	**GRCA50-A**
		3/4	3.38/85.9	18.0/0.29	1	**GRCA75**	**GRCA75-A**
	GRLA	1/2	3.38/85.9	18.0/0.29	1	**GRLA50**	**GRLA50-A**
		3/4	3.38/85.9	18.0/0.29	1	**GRLA75**	**GRLA75-A**
	GRTA	1/2	3.38/85.9	18.0/0.29	1	**GRTA50**	**GRTA50-A**
		3/4	3.38/85.9	18.0/0.29	1	**GRTA75**	**GRTA75-A**

Dimensions

Hub Size (Inches)	A	B	C	D	E	F	G
	Dimensions in Inches/Millimeters						
GR Series, Form 1							
1/2	3.75/95.3	2.44/62	2.88/73.2	0.75/19.1	0.81/20.6	2.25/57.2	1.25/31.8
3/4	3.75/95.3	2.44/62	2.88/73.2	0.75/19.1	0.81/20.6	2.25/57.2	1.25/31.8
1	3.75/95.3	2.44/62	2.88/73.2	0.94/23.9	0.94/23.9	2.25/57.2	1.06/26.9

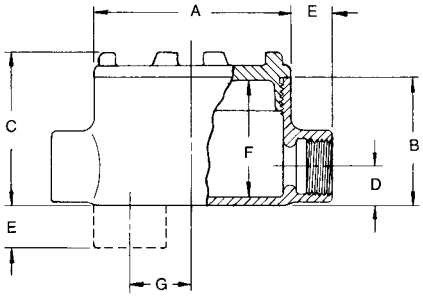

GR Series, Forms 2 and 3							
1-1/4	4.50/114.3	2.69/68.3	3.56/90.4	1.19/30.2	0.88/22.4	2.75/69.9	1.13/28.7
1-1/2	5.75/146.1	3.75/95.3	4.81/122.2	1.38/35.1	0.94/23.9	4.06/103.1	1.50/38.1
2	5.75/146.1	4.00/101.6	5.06/128.5	1.63/41.4	1/25.4	4.25/108.0	1.25/31.8

1-1/4" = Form 2
1-1/2" & 2" = Form 3

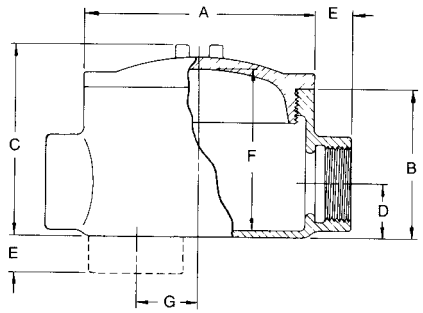

◆ *In Class I, Division 1, Group B atmospheres, all conduit runs must have a sealing fitting (not supplied) field-installed adjacent to the enclosure.*
① *Other covers available—see GR and GRF Conduit Outlet Box Covers page. Order separately.*
② *For malleable iron body and cover, add suffix* ***-M.***
③ *Form number designates body and matching cover sizes. To order body without cover, add suffix* ***-LC*** *to catalog number.*

© November 2011

GRF Flanged Conduit Outlet Boxes

Explosionproof, Dust-Ignitionproof

UNILETS® for use with Threaded Metal Conduit. Furnished with Internal Ground Screw and O-Ring.

Class I, Division 1 and 2, Groups B◆, C, D
Class II, Division 1 and 2, Groups E, F, G
Class III
NEMA 3, 4

	Hub Type	Conduit Size (Inches)	Cover Opening Inches/Millimeters	Capacity in³/dm³	Form Number ③	Catalog Number ① Malleable Iron ② Body With Aluminum Cover	Catalog Number ① Aluminum Body with Aluminum Cover
	GRFC	1/2	3.38/85.9	18.0/0.29	1	**GRFC50**	**GRFC50-A**
		3/4	3.38/85.9	18.0/0.29	1	**GRFC75**	**GRFC75-A**
		1	3.38/85.9	18.0/0.29	1	**GRFC100**	**GRFC100-A**
	GRFL	1/2	3.38/85.9	18.0/0.29	1	**GRFL50**	**GRFL50-A**
		3/4	3.38/85.9	18.0/0.29	1	**GRFL75**	**GRFL75-A**
		1	3.38/85.9	18.0/0.29	1	**GRFL100**	**GRFL100-A**
	GRFT	1/2	3.38/85.9	18.0/0.29	1	**GRFT50**	**GRFT50-A**
		3/4	3.38/85.9	18.0/0.29	1	**GRFT75**	**GRFT75-A**
		1	3.38/85.9	18.0/0.29	1	**GRFT100**	**GRFT100-A**
	GRFX	1/2	3.38/85.9	18.0/0.29	1	**GRFX50**	**GRFX50-A**
		3/4	3.38/85.9	18.0/0.29	1	**GRFX75**	**GRFX75-A**
		1	3.38/85.9	18.0/0.29	1	**GRFX100**	**GRFX100-A**

Dimensions

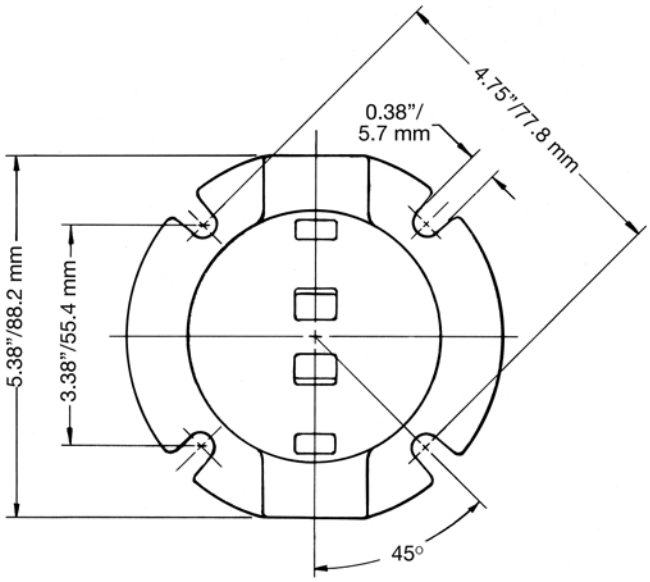

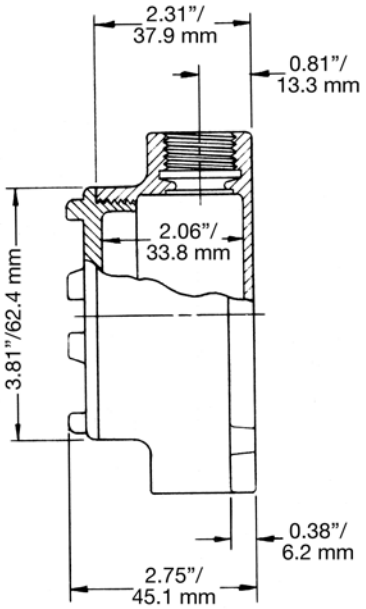

◆ *In Class I, Division 1, Group B atmospheres, all conduit runs must have a sealing fitting (not supplied) field-installed adjacent to the enclosure.*
① *Other covers available—see GR and GRF Conduit Outlet Box Covers page. Order separately*
② *For malleable iron body and cover, add suffix* ***-M.***
③ *Form number designates body and matching cover sizes. To order body without cover, add suffix* ***-LC*** *to catalog number.*

© November 2011

GR and GRF Conduit Outlet Box Covers

Explosionproof, Dust-Ignitionproof

Covers and O-rings Fit Bodies with Corresponding Form Numbers.

Class I, Division 1 and 2, Groups B◆, C, D
Class II, Division 1 and 2, Groups E, F, G
Class III
NEMA 3, 4

	Hub Type	Cover Opening Inches/Millimeters	Fixture Stem Size Inches/Millimeters	Form Number ①	Catalog Number Malleable Iron	Catalog Number Aluminum
	Surface ②	3.38/85.9		1	**GRK-1M**	**GRK-1**
		3.94/100.1		2	**GRK-2M**	**GRK-2**
		4.88/124.0		3	**GRK-3M**	**GRK-3**
	Sealing ②	3.38/85.9		1	**GRK-1SC**	**GRK-1SC-A**
		3.94/100.1		2	**GRK-2SC**	**GRK-2SC-A**
		4.88/124.0		3	**GRK-3SC**	**GRK-3SC-A**
	2” Deep Dome *UL Listed: E185964*	3.38/85.9		1	—	**GRK-1DC**
	Union Hub	3.38/85.9	0.75/19.1	1	**GRK-75U**	**GRK-75UA**
	Hub	3.38/85.9	0.50/12.7	1	**GRK-50**	**GRK50-A**
		3.38/85.9	0.75/19.1	1	**GRK-75**	**GRK75-A**
	Canopy Length 4-1/2”	3.38/85.9	0.50/12.7	1	**GRK-50C**	—
		3.38/85.9	0.75/19.1	1	**GRK-75C**	—
		3.38/85.9	1.00/25.4	1	**GRK-100C**	—

			Catalog Number
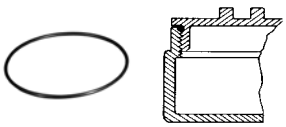	**O-Rings — Buna-N** Provide Raintight fit when used on following series: GR (Forms 1, 2 and 3), GRF (Form 1), GRH, and GRU (Form 1).	1	**GRG-1**
		2	**GRG-2**
		3	**GRG-3**
	GRTB Terminal Strip *For use in standard GR series boxes Weidmuller type MK terminal block ③ with wire range of #22-#12 AWG. Mounts on 2 predrilled and tapped standard holes (furnished in internal GR boxes).*		
	6 position terminal block kit	1+2	**GRTB6-12**
	6 position terminal block kit	3	**GRTB6-3**
	12 position terminal block kit	3	**GRTB12-3**

◆ In Class I, Division 1, Group B atmospheres, all conduit runs must have a sealing fitting (not supplied) field-installed adjacent to the enclosure.
① Form numbers designate cover and matching body sizes.
*② PVC coating available, add suffix -**PVC** to catalog number.*
③ Terminal block is UL listed for 300 Volt, 25 Amp. CSA certified for 300 Volt, 13 Amp.

© November 2011