Project		Catalog #		Type	
Prepared by		Notes		Date	

HALO

HLB3 3" Round Slim Low-Glare Canless LED Downlight

1/2" thin design allows this canless LED downlight to be installed under obstructions that are hidden above the ceiling. This fixture easily mounts directly to the ceiling with Flip-N-Klip Locking Springs and includes 5-color selectability, lumen selectability, flicker-free 5% dimming, and a low-glare prismatic lens for comfortable lighting in any space.

Typical Applications Residential • Multifamily • Hospitality

Interactive Menu

- Order Information page 3
- Product Specifications page 4
- Energy Data page 5
- Photometric Data page 5
- Product Warranty

ENERGY STAR · CERTIFIED · Efficiency Standards T24 (1) · Can be used for IECC International Energy Conservation Code High Efficacy Compliance · RoHS COMPLIANT (1)

ADJUSTABLE WHITE (27/30/35/40/50K) · SELECTABLE LUMENS · DIMMABLE Down to 5% · IC RATED · air-tite · WET RATED

Can be used to comply with California Title 24 High Efficacy requirements.
Certified to California Appliance Efficiency Database under JA8.

† IP65 rated when used with sealant (not included)

Top Product Features

- Round 3" slim canless downlight suitable for installation in IC (insulation contact) or non-IC applications
- Flip-N-Klip™ Locking Springs prevent painful spring snap and lock upright for faster, safer installation
- **Lens & Trim:** die-cast aluminum trim with low-glare prismatic lens
- **Color Temperature (CCT):** 5-color Field-SeleCCTable (2700K, 3000K, 3500K, 4000K, 5000K); 90+ CRI
- **Brightness (Lumens):** Lumen Select Switch – 670/885/1065 lumens (3000K)
- **Dimming:** Dims to 5% (phase cut LE/TE) with compatible dimmers; 120V input
- Decorative Overlays (sold separately)
- AIR-TITE, wet location-listed, and ENERGY STAR®
- 50,000 hrs of maintenance-free operation in damp or wet locations
- 5-year warranty

1. T24 and RoHS are self-tested by Cooper Lighting Solutions. Not a third party certification.

Dimensional and Mounting Details

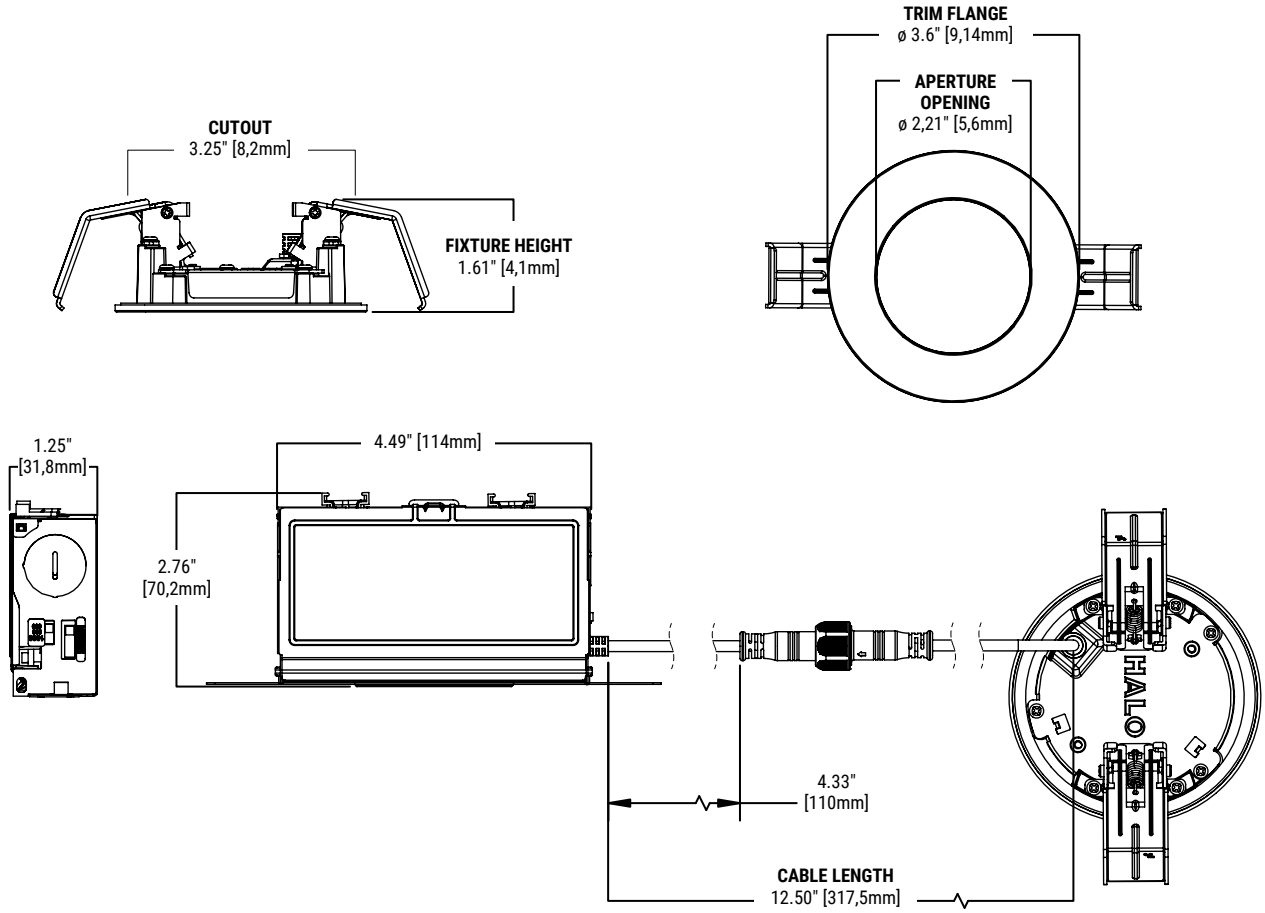

Mounting Frame

HL3RSMF

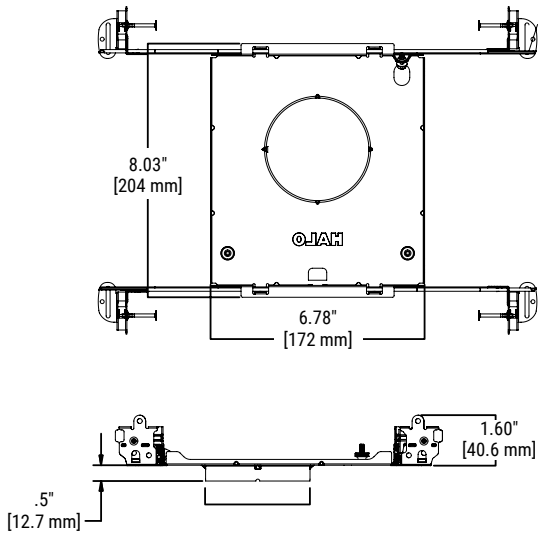

Smash Plate

SP346RS

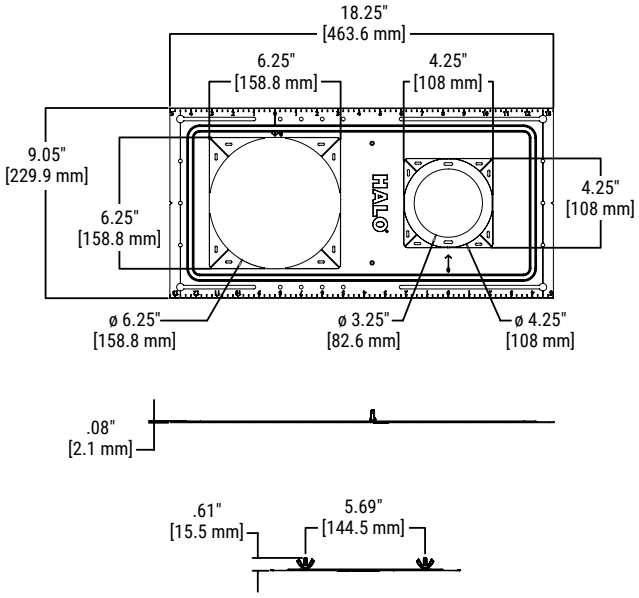

Order Information

Catalog Number	Module	Lumens (3000K)	CRI/CCT	Driver	Finish	Packaging
HLB3LSFS5	3-inch Round Slim Canless LED Downlight	670/885/1065 selectable lumens	90+ CRI, 5-color Field-SeleCCTable™ CCT: 2700/3000/3500/4000/5000K	5% Phase Cut LE/TE Dimming, 120V 60Hz	Matte White	Recyclable 4-color plastic-free packaging

Accessories – Decorative Trim Overlays and Oversized Trim

Add a touch of style and personality to spaces with HALO Decorative Overlays by matching existing hardware or painted finishes. (order separately)

Catalog Number	Description	Finish
HLB3RTRMMW	3" Round Decorative Overlay	Paintable Matte White
HLB3RTRMMB	3" Round Decorative Overlay	Matte Black
HLB3RTRMSN	3" Round Decorative Overlay	Satin Nickel
HLB3RTRMTBZ	3" Round Decorative Overlay	Tuscan Bronze
HLB3ROTMW	3" Round Oversized Trim	Paintable Matte White

HLB3RTRMMW
Matte White (Paintable)

HLB3RTRMMB
Matte Black

HLB3RTRMSN
Satin Nickel

HLB3RTRMTBZ
Tuscan Bronze

HLB3ROTMW
Matte White (Paintable)

Accessories – Fixture-to-Junction Box Extension Cable (order separately)

Use HALO Canless Extension Cables in applications where junction boxes need to be installed further away from the fixture — either for convenience or to save on line-voltage wire. (Co-locating junction boxes makes adjustments and maintenance fast and easy.)

Catalog Number	Description
HLB06FSEC	6 ft. Extension Cable
HLB12FSEC	12 ft. Extension Cable
HLB20FSEC	20 ft. Extension Cable

HLB06FSEC
6 ft. Extension Cable

HLB12FSEC
12 ft. Extension Cable

HLB20FSEC
20 ft. Extension Cable

Accessories – New Construction Mounting Frames (order separately) [2]

Designed to ensure the proper placement and alignment of canless LED downlights in new construction projects. It features adjustable hanger bars, integrated thumb screws, and pre-installed nails for easy installation and compliance with local code requirements. (order separately)

Catalog Number	Description
HL3RSMF	3" Round-to-Square New Construction Mounting Frame
SP346RS	3"/4"/6" Round New Construction Smash Plate (4" & 6" openings convert round-to-square)

2. New Construction Mounting Frames / Smash Plates reserve ceiling positions and holds canless junction boxes during rough-in wiring phase.

HL3RSMF
Mounting Frame

SP346RS
Smash Plate

Accessories – Emergency Power (order separately)

Emergency power to connected fixtures during outages. Automatically switches on and dims fixtures for extended runtime.

Catalog Number	Description
INVM-25W-ADSD	Single Phase 0-10V Auto Dimming

INVM-25W-ADSD
Inverter

Product Specifications

Selectable System
- Use the 5-color selector switch to choose between: 2700K, 3000K, 3500K, 4000K, and 5000K
- Factory default is set to 3000K
- Use Lumen Select switch to choose the brightness level (low-medium-high)
- Lumen select factory default is set to the highest lumen option

Module – Trim
- Module construction includes LED array, heat sink, reflector, prismatic lens, and die-cast aluminum trim ring
- Heat sink designed to conduct heat away from the LED array, keeping the junction temperatures below specified maximums, even when installed in insulated ceiling environments
- Achieves L70 at 50,000 hrs in IC (insulation contact) and non-IC applications

LED Array
- Mid power LED array provides a uniform source with high efficiency and no pixilation
- 90 CRI minimum, R9 greater than 50
- Color accuracy at 3 SDCM at the end points and 4 SDCM in the middle, provide excellent color quality and uniformity

Optical Assembly
- Precision acrylic light guide organizes source flux into wide distribution with 1.4 spacing criteria, useful for general area illumination

Airtite
- The downlights meet Airtight ASTM-E283 requirements without gasket

Driver
- Integral 120V 60 Hz constant current driver provides noise free operation
- Continuous, flicker-free phase cut (leading-edge/ trailing-edge - LE/TE) dimming from 100% to 5% output with compatible dimmers
- See this fixture's Dimming Guide for compatible dimmers. www.cooperlighting.com
- **Tip:** for optimal dimming performance, consider dimmers with low-end trim adjustments. Note that some dimmers require a neutral wire in the box.
  - Wiring: Includes quick connect push connectors for mains power connection.
  - Aluminum driver / junction box with captive hinged junction box cover
  - Listed for (6) #12 AWG 90˚ C splice conductors, 2-in, 2-out plus (2) ground
  - (2) 1/2" conduit pry-outs
  - (2) Slide-N-Side™ non-metallic (NM) wire traps
- Accepts 14-2, 14-3, 12-2, 12-3 U.S and 14-2, 14-3, 12-2 Canadian NM cable
- (3) 4-port push wire nuts with clear caps for quick and reliable mains voltage connections
- Integral keyhole mounting slots facilitate direct mounting to building structure or new construction mounting frame

Installation
- Can be installed in 1/2" to 1-1/4" thick ceilings

Retention
- Cutout dimension = 3.25" hole
- No additional housing or junction box required (Not for installation in recessed cans)
- The included remote driver / junction box may be used in direct contact with insulation
- Installer must cut hole and install fixture into aperture with the clips compressed
- New Flip-N-Klip springs lock in the up position for easy installation. During installation Flip-N-Klip arm will come in contact with opening and automatically engage to lock the fixture in place
- For new construction applications, use HALO Canless Mounting Frames or Smash Plates prior to drywall installation

Gasket
- Closed cell gaskets achieve restrictive airflow requirements without additional caulking

Mounting Frame
- Galvanized steel mounting frame with offset aperture and integral bar hanger receivers
- Locking screws provide positive horizontal locking
- Captive thumbscrews provide toolless attachment of the fixture's remote driver / junction box to the mounting frame for wiring during rough-in phase
- 3/8" drywall collar included to improve hole locating and drywall cutting process
- Collar is notched at 90° intervals for laser centering
- GOT NAIL! Gen 3 bar hangers adjust from 8" to 24" wide
- Pass thru feature allows shortening without removal
- Captive nail penetrates standard and engineered lumber
- Mounting flange levels platform with ceiling
- Integral clip attaches directly to tee-bar.

Emergency Mini Inverter
- Provides 90 minutes of 25VA emergency power to lighting fixtures
- Auto dimming allows up to 25VA max dimmable load
- 25VA max non-dimmable load
- Automatic 120VAC output power to driver or ballast means easy field install
- UL924 and CSA 22.2 No.141 listed for field or factory installation
- Remote mounting up to 250 feet
- Maintenance free lithium-ion battery
- See Mini Inverter Spec Sheet for more information

Compliance
- UL Certified US and Canada Type IC suitable for direct contact with air permeable insulation
- Not recommended for use in direct contact with spray foam insulation, reference NEMA LSD57-2013
- Wet location listed and IP44 ingress protection
- Airtight per ASTM-E283-04
- Suitable for use in clothes closets when installed in accordance with the NEC 410.16 spacing requirements
- EMI/RFI emissions per FCC 47CFR Part 15 consumer limits
- Contains no mercury or lead and RoHS compliant [1]
- Photometric testing in accordance with IES LM79-08
- Lumen maintenance projections in accordance with IES LM-80-08 and TM-21-11
- Can be used for State of California Title 24 high efficacy luminaire compliance. Complies with Title 24 JA8-2025-E. [1]
- Can be used International Energy Conservation Code (IECC) high efficiency luminaire compliance.
- ENERGY STAR® certified, reference "Certified Light Fixtures" database

Warranty
- Five-year limited warranty, consult website for details. www.cooperlighting.com/warranty

1. T24 and RoHS are self-tested by Cooper Lighting Solutions. Not a third party certification.

Energy Data

HLB3LSFS5			
Lumens (nominal)	600	800	1000
Input Voltage	120V	120V	120V
Input Current	54mA	71mA	85mA
Input Power	6.1W	8.2W	10W
Efficiency	76%	76%	76%
Inrush	2.16A @ 33 micro seconds	2.16A @ 33 micro seconds	2.16A @ 33 micro seconds
THDi	17.4%	14.9%	12.9%
T Ambient	-30 to +40 °C	-30 to +40 °C	-30 to +40 °C
PF	0.95	0.965	0.975
Sound Rating	< 22dBA @1feet	< 22dBA @1feet	< 22dBA @1feet
Efficacy (LPW)	≥82	≥82	≥82

	CCT	Watts	Lumens	LPW	CRI
600 Lumen (nominal)	2700K	6.3	655	104.0	92
	3000K	6.4	670	104.7	95
	3500K	6.3	680	107.9	96
	4000K	6.4	680	106.3	95
	5000K	6.4	670	104.7	94

	CCT	Watts	Lumens	LPW	CRI
800 Lumen (nominal)	2700K	8.4	860	102.4	92
	3000K	8.5	885	104.1	94
	3500K	8.4	900	107.1	95
	4000K	8.6	900	104.7	95
	5000K	8.4	875	104.2	93

	CCT	Watts	Lumens	LPW	CRI
1000 Lumen (nominal)	2700K	10.1	1025	101.5	91
	3000K	10.3	1065	103.4	94
	3500K	10.1	1085	107.4	95
	4000K	10.4	1085	104.3	95
	5000K	10.3	1045	101.5	93

Photometric Data

COLOR METRICS - TM-30-15 & CRI/CIE (3000K)

90 CRI Color Metric Summary - 3000K*

Low Lumen

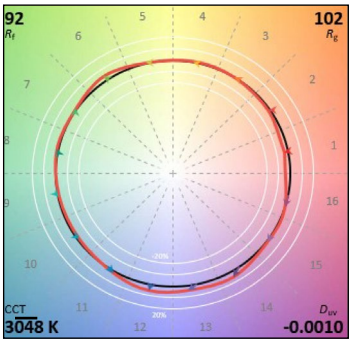

Reference Illuminant — Test Source

Middle Lumen

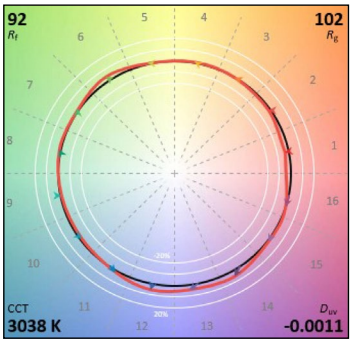

Reference Illuminant — Test Source

High Lumen

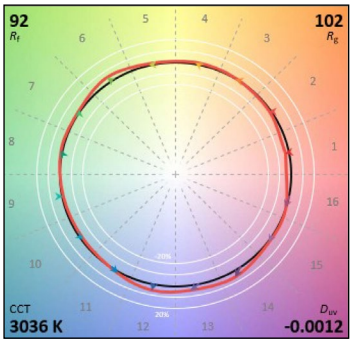

Reference Illuminant — Test Source

Cooper Lighting Solutions
1121 Highway 74 South
Peachtree City, GA 30269
P: 770-486-4800
www.cooperlighting.com

© 2026 Cooper Lighting Solutions
All Rights Reserved.

Specifications and dimensions subject to change without notice.

Project		Catalog #		Type	
Prepared by		Notes		Date	

HALO

HLB3 3" Round Slim Low-Glare Canless LED Downlight

1/2" thin design allows this canless LED downlight to be installed under obstructions that are hidden above the ceiling. This fixture easily mounts directly to the ceiling with Flip-N-Klip Locking Springs and includes 5-color selectability, lumen selectability, flicker-free 5% dimming, and a low-glare prismatic lens for comfortable lighting in any space.

Typical Applications Residential • Multifamily • Hospitality

Interactive Menu

- Order Information page 3
- Product Specifications page 4
- Energy Data page 5
- Photometric Data page 5
- Product Warranty

ENERGY STAR · CERTIFIED · Efficiency Standards T24 (1) · Can be used for IECC International Energy Conservation Code High Efficacy Compliance · RoHS COMPLIANT (1)

ADJUSTABLE WHITE (27/30/35/40/50K) · SELECTABLE LUMENS · DIMMABLE Down to 5% · IC RATED · air-tite · WET RATED

Can be used to comply with California Title 24 High Efficacy requirements.
Certified to California Appliance Efficiency Database under JA8.

† IP65 rated when used with sealant (not included)

Top Product Features

- Round 3" slim canless downlight suitable for installation in IC (insulation contact) or non-IC applications
- Flip-N-Klip™ Locking Springs prevent painful spring snap and lock upright for faster, safer installation
- **Lens & Trim:** die-cast aluminum trim with low-glare prismatic lens
- **Color Temperature (CCT):** 5-color Field-SeleCCTable (2700K, 3000K, 3500K, 4000K, 5000K); 90+ CRI
- **Brightness (Lumens):** Lumen Select Switch – 670/885/1065 lumens (3000K)
- **Dimming:** Dims to 5% (phase cut LE/TE) with compatible dimmers; 120V input
- Decorative Overlays (sold separately)
- AIR-TITE, wet location-listed, and ENERGY STAR®
- 50,000 hrs of maintenance-free operation in damp or wet locations
- 5-year warranty

1. T24 and RoHS are self-tested by Cooper Lighting Solutions. Not a third party certification.

Dimensional and Mounting Details

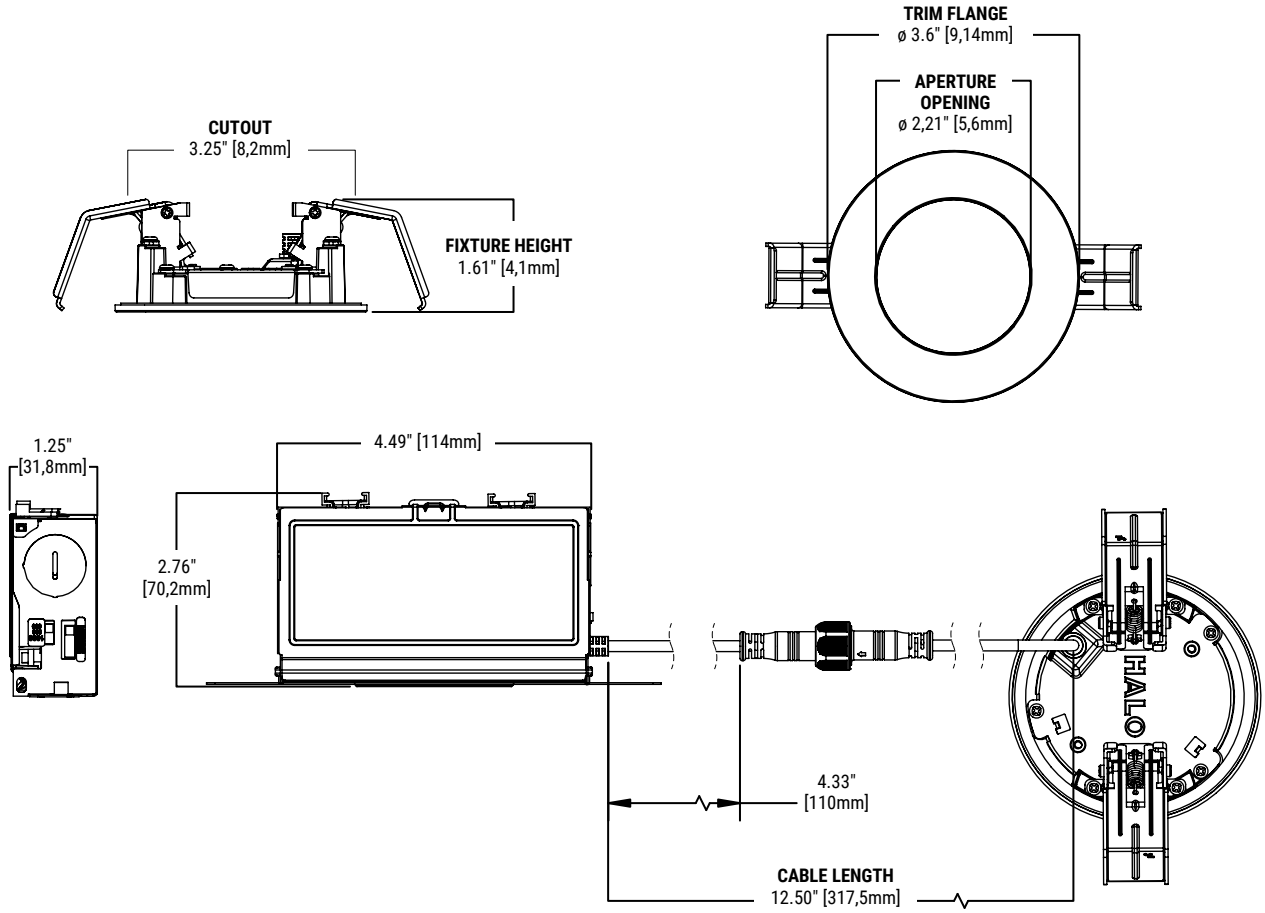

Mounting Frame

HL3RSMF

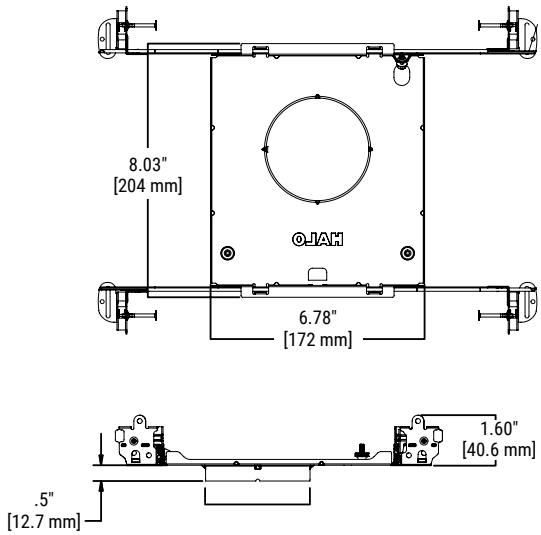

Smash Plate

SP346RS

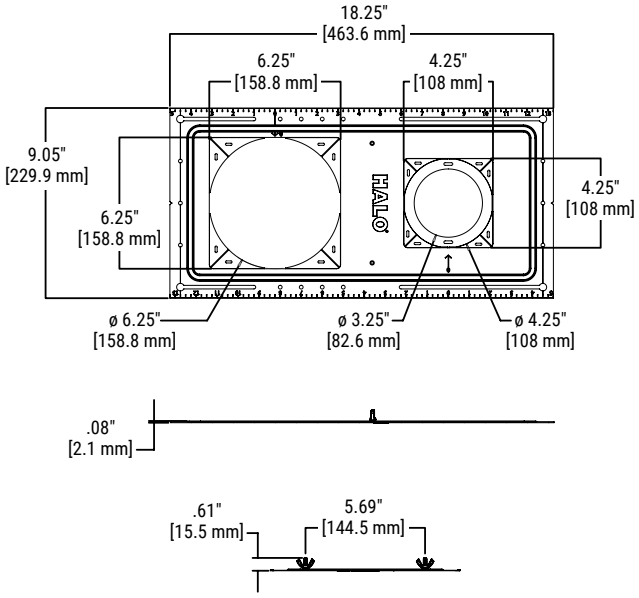

Order Information

Catalog Number	Module	Lumens (3000K)	CRI/CCT	Driver	Finish	Packaging
HLB3LSFS5	3-inch Round Slim Canless LED Downlight	670/885/1065 selectable lumens	90+ CRI, 5-color Field-SeleCCTable™ CCT: 2700/3000/3500/4000/5000K	5% Phase Cut LE/TE Dimming, 120V 60Hz	Matte White	Recyclable 4-color plastic-free packaging

Accessories – Decorative Trim Overlays and Oversized Trim

Add a touch of style and personality to spaces with HALO Decorative Overlays by matching existing hardware or painted finishes. (order separately)

Catalog Number	Description	Finish
HLB3RTRMMW	3" Round Decorative Overlay	Paintable Matte White
HLB3RTRMMB	3" Round Decorative Overlay	Matte Black
HLB3RTRMSN	3" Round Decorative Overlay	Satin Nickel
HLB3RTRMTBZ	3" Round Decorative Overlay	Tuscan Bronze
HLB3ROTMW	3" Round Oversized Trim	Paintable Matte White

HLB3RTRMMW
Matte White (Paintable)

HLB3RTRMMB
Matte Black

HLB3RTRMSN
Satin Nickel

HLB3RTRMTBZ
Tuscan Bronze

HLB3ROTMW
Matte White (Paintable)

Accessories – Fixture-to-Junction Box Extension Cable (order separately)

Use HALO Canless Extension Cables in applications where junction boxes need to be installed further away from the fixture — either for convenience or to save on line-voltage wire. (Co-locating junction boxes makes adjustments and maintenance fast and easy.)

Catalog Number	Description
HLB06FSEC	6 ft. Extension Cable
HLB12FSEC	12 ft. Extension Cable
HLB20FSEC	20 ft. Extension Cable

HLB06FSEC
6 ft. Extension Cable

HLB12FSEC
12 ft. Extension Cable

HLB20FSEC
20 ft. Extension Cable

Accessories – New Construction Mounting Frames (order separately) [2]

Designed to ensure the proper placement and alignment of canless LED downlights in new construction projects. It features adjustable hanger bars, integrated thumb screws, and pre-installed nails for easy installation and compliance with local code requirements. (order separately)

Catalog Number	Description
HL3RSMF	3" Round-to-Square New Construction Mounting Frame
SP346RS	3"/4"/6" Round New Construction Smash Plate (4" & 6" openings convert round-to-square)

2. New Construction Mounting Frames / Smash Plates reserve ceiling positions and holds canless junction boxes during rough-in wiring phase.

HL3RSMF
Mounting Frame

SP346RS
Smash Plate

Accessories – Emergency Power (order separately)

Emergency power to connected fixtures during outages. Automatically switches on and dims fixtures for extended runtime.

Catalog Number	Description
INVM-25W-ADSD	Single Phase 0-10V Auto Dimming

INVM-25W-ADSD
Inverter

Product Specifications

Selectable System
- Use the 5-color selector switch to choose between: 2700K, 3000K, 3500K, 4000K, and 5000K
- Factory default is set to 3000K
- Use Lumen Select switch to choose the brightness level (low-medium-high)
- Lumen select factory default is set to the highest lumen option

Module – Trim
- Module construction includes LED array, heat sink, reflector, prismatic lens, and die-cast aluminum trim ring
- Heat sink designed to conduct heat away from the LED array, keeping the junction temperatures below specified maximums, even when installed in insulated ceiling environments
- Achieves L70 at 50,000 hrs in IC (insulation contact) and non-IC applications

LED Array
- Mid power LED array provides a uniform source with high efficiency and no pixilation
- 90 CRI minimum, R9 greater than 50
- Color accuracy at 3 SDCM at the end points and 4 SDCM in the middle, provide excellent color quality and uniformity

Optical Assembly
- Precision acrylic light guide organizes source flux into wide distribution with 1.4 spacing criteria, useful for general area illumination

Airtite
- The downlights meet Airtight ASTM-E283 requirements without gasket

Driver
- Integral 120V 60 Hz constant current driver provides noise free operation
- Continuous, flicker-free phase cut (leading-edge/ trailing-edge - LE/TE) dimming from 100% to 5% output with compatible dimmers
- See this fixture's Dimming Guide for compatible dimmers. www.cooperlighting.com
- **Tip:** for optimal dimming performance, consider dimmers with low-end trim adjustments. Note that some dimmers require a neutral wire in the box.
  - Wiring: Includes quick connect push connectors for mains power connection.
  - Aluminum driver / junction box with captive hinged junction box cover
  - Listed for (6) #12 AWG 90˚ C splice conductors, 2-in, 2-out plus (2) ground
  - (2) 1/2" conduit pry-outs
  - (2) Slide-N-Side™ non-metallic (NM) wire traps
- Accepts 14-2, 14-3, 12-2, 12-3 U.S and 14-2, 14-3, 12-2 Canadian NM cable
- (3) 4-port push wire nuts with clear caps for quick and reliable mains voltage connections
- Integral keyhole mounting slots facilitate direct mounting to building structure or new construction mounting frame

Installation
- Can be installed in 1/2" to 1-1/4" thick ceilings

Retention
- Cutout dimension = 3.25" hole
- No additional housing or junction box required (Not for installation in recessed cans)
- The included remote driver / junction box may be used in direct contact with insulation
- Installer must cut hole and install fixture into aperture with the clips compressed
- New Flip-N-Klip springs lock in the up position for easy installation. During installation Flip-N-Klip arm will come in contact with opening and automatically engage to lock the fixture in place
- For new construction applications, use HALO Canless Mounting Frames or Smash Plates prior to drywall installation

Gasket
- Closed cell gaskets achieve restrictive airflow requirements without additional caulking

Mounting Frame
- Galvanized steel mounting frame with offset aperture and integral bar hanger receivers
- Locking screws provide positive horizontal locking
- Captive thumbscrews provide toolless attachment of the fixture's remote driver / junction box to the mounting frame for wiring during rough-in phase
- 3/8" drywall collar included to improve hole locating and drywall cutting process
- Collar is notched at 90° intervals for laser centering
- GOT NAIL! Gen 3 bar hangers adjust from 8" to 24" wide
- Pass thru feature allows shortening without removal
- Captive nail penetrates standard and engineered lumber
- Mounting flange levels platform with ceiling
- Integral clip attaches directly to tee-bar.

Emergency Mini Inverter
- Provides 90 minutes of 25VA emergency power to lighting fixtures
- Auto dimming allows up to 25VA max dimmable load
- 25VA max non-dimmable load
- Automatic 120VAC output power to driver or ballast means easy field install
- UL924 and CSA 22.2 No.141 listed for field or factory installation
- Remote mounting up to 250 feet
- Maintenance free lithium-ion battery
- See Mini Inverter Spec Sheet for more information

Compliance
- UL Certified US and Canada Type IC suitable for direct contact with air permeable insulation
- Not recommended for use in direct contact with spray foam insulation, reference NEMA LSD57-2013
- Wet location listed and IP44 ingress protection
- Airtight per ASTM-E283-04
- Suitable for use in clothes closets when installed in accordance with the NEC 410.16 spacing requirements
- EMI/RFI emissions per FCC 47CFR Part 15 consumer limits
- Contains no mercury or lead and RoHS compliant [1]
- Photometric testing in accordance with IES LM79-08
- Lumen maintenance projections in accordance with IES LM-80-08 and TM-21-11
- Can be used for State of California Title 24 high efficacy luminaire compliance. Complies with Title 24 JA8-2025-E. [1]
- Can be used International Energy Conservation Code (IECC) high efficiency luminaire compliance.
- ENERGY STAR® certified, reference "Certified Light Fixtures" database

Warranty
- Five-year limited warranty, consult website for details. www.cooperlighting.com/warranty

1. T24 and RoHS are self-tested by Cooper Lighting Solutions. Not a third party certification.

Energy Data

HLB3LSFS5			
Lumens (nominal)	600	800	1000
Input Voltage	120V	120V	120V
Input Current	54mA	71mA	85mA
Input Power	6.1W	8.2W	10W
Efficiency	76%	76%	76%
Inrush	2.16A @ 33 micro seconds	2.16A @ 33 micro seconds	2.16A @ 33 micro seconds
THDi	17.4%	14.9%	12.9%
T Ambient	-30 to +40 °C	-30 to +40 °C	-30 to +40 °C
PF	0.95	0.965	0.975
Sound Rating	< 22dBA @1feet	< 22dBA @1feet	< 22dBA @1feet
Efficacy (LPW)	≥82	≥82	≥82

	CCT	Watts	Lumens	LPW	CRI
600 Lumen (nominal)	2700K	6.3	655	104.0	92
	3000K	6.4	670	104.7	95
	3500K	6.3	680	107.9	96
	4000K	6.4	680	106.3	95
	5000K	6.4	670	104.7	94

	CCT	Watts	Lumens	LPW	CRI
800 Lumen (nominal)	2700K	8.4	860	102.4	92
	3000K	8.5	885	104.1	94
	3500K	8.4	900	107.1	95
	4000K	8.6	900	104.7	95
	5000K	8.4	875	104.2	93

	CCT	Watts	Lumens	LPW	CRI
1000 Lumen (nominal)	2700K	10.1	1025	101.5	91
	3000K	10.3	1065	103.4	94
	3500K	10.1	1085	107.4	95
	4000K	10.4	1085	104.3	95
	5000K	10.3	1045	101.5	93

Photometric Data

COLOR METRICS - TM-30-15 & CRI/CIE (3000K)

90 CRI Color Metric Summary - 3000K*

Low Lumen

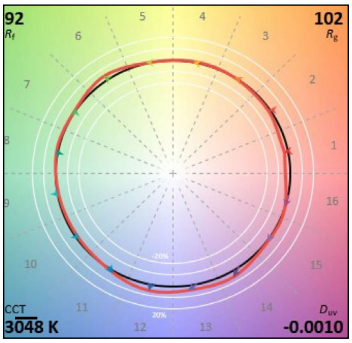

Reference Illuminant — Test Source

Middle Lumen

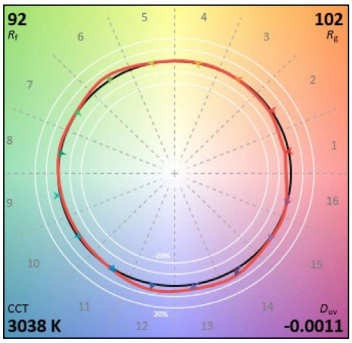

Reference Illuminant — Test Source

High Lumen

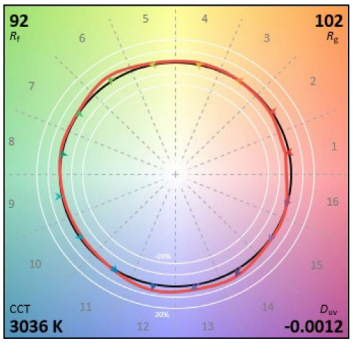

Reference Illuminant — Test Source

Cooper Lighting Solutions
1121 Highway 74 South
Peachtree City, GA 30269
P: 770-486-4800
www.cooperlighting.com

© 2026 Cooper Lighting Solutions
All Rights Reserved.

Specifications and dimensions subject to change without notice.