Technical Specifications - J Series

Opaque Cover "W" configuration - 4 cover screws, lift off cover

W Construction

Material	Hot compression molded fiberglass reinforced polyester (thermoset)
Gasket	Poured polyurethane seamless gasket provides watertight, dust-tight environmental seal
Pan head screws	Minimized protruding surfaces
Stainless Steel Hardware	300 Series stainless used on all external hardware
Molded in Mounting Flange	Molded in flange for ease of mounting.
Mounting Bosses	Panel mounting capability for fixed rear panel
Metal inserts	Back panel utilizes threaded brass inserts accepting 10-32 screws
Soft Edge Design	Rounded edges, minimal protrusions or exposed pocket areas for assembly of dust and debris
Cover retention chain	Stainless steel beaded chain for securing cover after lift off

W Industry Standards

UL/cUL 50	File E64358 Type 1, 3R, 4X, 6P, 12
NEMA 250	Type 1, 3R, 4X, 6P, 12
CSA Std C22.2	File LR069014 Type 1, 3R, 4X, 6P, 12
Temperature Range	(-76°F to +274°F) (-60°C to +134°C)
Flammability Rating	UL94-5V
Self Extinguishing	Non-haloginated, non-flame propagating
Chemical Resistance	Full chemical resistance charts listed in appendix
NFPA No. 101 Flame Spread	Class A (1)

W Accessories

Back Panels

Aluminum	BP__AL	pg. 149 - 150
Fiberglass	BP__FG	pg. 149 - 150
Stainless Steel	BP__SS	pg. 149 - 150
Carbon Steel	BP__CS	pg. 149 - 150

Accessories

Drain & Breather Vents	pg. 144, 146
Hole Plugs	pg. 145
Assorted Hubs and Cord Grips	pg. 145, 148
All Other Accessories	pg. 144 - 159

W Modifications

Custom Colors	pg. 12 - 13
Silk Screening	pg. 12 - 13
EMI/RFI Shielding	pg. 12 - 13
Custom Window	pg. 12 - 13
Custom Cutouts/Holes	pg. 12 - 13

NOTES:

HW Technical Specifications - J Series

Opaque Cover "HW" configuration - Hinged, 2 cover screws

HW Construction

Material	Hot compression molded fiberglass reinforced polyester (thermoset). Available standard in Glacier Grey or White
Gasket	Poured polyurethane seamless gasket provides watertight, dust-tight environmental seal
Pan head screws	Minimized protruding surfaces
Stainless Steel Hardware	300 Series stainless used on all external hardware
Molded in Mounting Flange	Molded in flange for ease of mounting.
Mounting Bosses	Panel mounting capability for fixed rear panel
Metal inserts	Back panel utilizes threaded brass inserts accepting 10-32 screws
Soft Edge Design	Rounded edges, minimal protrusions or exposed pocket areas for assembly of dust and debris
Color	Available Standard in Glacier Grey or White

HW Industry Standards

UL/cUL 50	File E64358 Type 1, 3R, 4X, 6P, 12
NEMA 250	Type 1, 3R, 4X, 6P, 12
CSA Std C22.2	File LR069014 Type 1, 3R, 4X, 6P, 12
Temperature Range	(-76°F to +274°F) (-60°C to +134°C)
Flammability Rating	UL94-5V
Self Extinguishing	Non-haloginated, non-flame propagating
Chemical Resistance	Full chemical resistance charts listed in appendix
NFPA No. 101 Flame Spread	Class A (1)

NOTES:

HW Accessories

Back Panels

Aluminum	BP__AL	pg. 149 - 150
Fiberglass	BP__FG	pg. 149 - 150
Stainless Steel	BP__SS	pg. 149 - 150
Carbon Steel	BP__CS	pg. 149 - 150

Accessories

Drain & Breather Vents	pg. 144, 146
Hole Plugs	pg. 145
Assorted Hubs and Cord Grips	pg. 145, 148
All Other Accessories	pg. 144 - 159

HW Modifications

Custom Colors	pg. 12 - 13
Silk Screening	pg. 12 - 13
EMI/RFI Shielding	pg. 12 - 13
Custom Window	pg. 12 - 13
Custom Cutouts/Holes	pg. 12 - 13

Technical Specifications - J Series

Opaque Cover "HLL" configuration - Hinged, twist latch

HLL Construction

Material	Hot compression molded fiberglass reinforced polyester (thermoset)
Gasket	Poured polyurethane seamless gasket provides watertight, dust-tight environmental seal
Pan head screws	Minimized protruding surfaces
Stainless Steel Hardware	300 Series stainless used on all external hardware
Molded in Mounting Flange	Molded in flange for ease of mounting.
Mounting Bosses	Panel mounting capability for fixed rear panel
Metal inserts	Back panel utilizes threaded brass inserts accepting 10-32 screws
Soft Edge Design	Rounded edges, minimal protrusions or exposed pocket areas for assembly of dust and debris

HLL Industry Standards

UL/cUL 50	File E64358 Type 1, 3R, 4X, 6P, 12
NEMA 250	Type 1, 3R, 4X, 6P, 12
CSA Std C22.2	File LR069014 Type 1, 3R, 4X, 6P, 12
Temperature Range	(-76°F to +274°F) (-60°C to +134°C)
Flammability Rating	UL94-5V
Self Extinguishing	Non-haloginated, non-flame propagating
Chemical Resistance	Full chemical resistance charts listed in appendix
NFPA No. 101 Flame Spread	Class A (1)

HLL Accessories

Back Panels

Aluminum	BP__AL	pg. 149 - 150
Fiberglass	BP__FG	pg. 149 - 150
Stainless Steel	BP__SS	pg. 149 - 150
Carbon Steel	BP__CS	pg. 149 - 150

Accessories

Drain & Breather Vents	pg. 144, 146
Hole Plugs	pg. 145
Assorted Hubs and Cord Grips	pg. 145, 148
All Other Accessories	pg. 144 - 159

HLL Modifications

Custom Colors	pg. 12 - 13
Silk Screening	pg. 12 - 13
EMI/RFI Shielding	pg. 12 - 13
Custom Window	pg. 12 - 13
Custom Cutouts/Holes	pg. 12 - 13

NOTES:

Technical Specifications - J Series

HPL

Opaque Cover "HPL" configuration - Hinged, padlock latch

NOTES:

HPL Construction

Material	Hot compression molded fiberglass reinforced polyester (thermoset). Available standard in Glacier Grey or White
Gasket	Poured polyurethane seamless gasket provides watertight, dust-tight environmental seal
Pan head screws	Minimized protruding surfaces
Stainless Steel Hardware	300 Series stainless used on all external hardware
Molded in Mounting Flange	Molded in flange for ease of mounting.
Mounting Bosses	Panel mounting capability for fixed rear panel
Metal inserts	Back panel utilizes threaded brass inserts accepting 10-32 screws
Soft Edge Design	Rounded edges, minimal protrusions or exposed pocket areas for assembly of dust and debris
Color	Available Standard in Glacier Grey or White

HPL Industry Standards

UL/cUL 50	File E64358 Type 1, 3R, 4X, 6P, 12
NEMA 250	Type 1, 3R, 4X, 6P, 12
CSA Std C22.2	File LR069014 Type 1, 3R, 4X, 6P, 12
Temperature Range	(-76°F to +274°F) (-60°C to +134°C)
Flammability Rating	UL94-5V
Self Extinguishing	Non-haloginated, non-flame propagating
Chemical Resistance	Full chemical resistance charts listed in appendix
NFPA No. 101 Flame Spread	Class A (1)

HPL Accessories

Back Panels

Aluminum	BP__AL	pg. 149 - 150
Fiberglass	BP__FG	pg. 149 - 150
Stainless Steel	BP__SS	pg. 149 - 150
Carbon Steel	BP__CS	pg. 149 - 150

Accessories

Drain & Breather Vents	pg. 144, 146
Hole Plugs	pg. 145
Assorted Hubs and Cord Grips	pg. 145, 148
All Other Accessories	pg. 144 - 159

HPL Modifications

Custom Colors	pg. 12 - 13
Silk Screening	pg. 12 - 13
EMI/RFI Shielding	pg. 12 - 13
Custom Window	pg. 12 - 13
Custom Cutouts/Holes	pg. 12 - 13

Technical Specifications - J Series

Opaque Cover "FHW" configuration - Fiberglass hinge, four cover screws

NOTES:

FHW *Construction*

Material	Hot compression molded fiberglass reinforced polyester (thermoset)
Gasket	Poured polyurethane seamless gasket provides watertight, dust-tight environmental seal
Pan head screws	Minimized protruding surfaces
Stainless Steel Hardware	300 Series stainless used on all external hardware
Molded in Mounting Flange	Molded in flange for ease of mounting.
Mounting Bosses	Panel mounting capability for fixed rear panel
Metal inserts	Back panel utilizes threaded brass inserts accepting 10-32 screws
Soft Edge Design	Rounded edges, minimal protrusions or exposed pocket areas for assembly of dust and debris
Hinge Material	Glass filled Polybutylene Terephthalate (PBT)

FHW *Industry Standards*

UL/cUL 50	File E64358 Type 1, 3R, 4X, 6P, 12
NEMA 250	Type 1, 3R, 4X, 6P, 12
CSA Std C22.2	File LR069014 Type 1, 3R, 4X, 6P, 12
Temperature Range	(-76°F to +274°F) (-60°C to +134°C)
Flammability Rating	UL94-5V
Self Extinguishing	Non-haloginated, non-flame propagating
Chemical Resistance	Full chemical resistance charts listed in appendix
NFPA No. 101 Flame Spread	Class A (1)

FHW *Accessories*

Back Panels

Aluminum	BP__AL	pg. 149 - 150
Fiberglass	BP__FG	pg. 149 - 150
Stainless Steel	BP__SS	pg. 149 - 150
Carbon Steel	BP__CS	pg. 149 - 150

Accessories

Drain & Breather Vents	pg. 144, 146
Hole Plugs	pg. 145
Assorted Hubs and Cord Grips	pg. 145, 148
All Other Accessories	pg. 144 - 159

FHW *Modifications*

Custom Colors	pg. 12 - 13
Silk Screening	pg. 12 - 13
EMI/RFI Shielding	pg. 12 - 13
Custom Window	pg. 12 - 13
Custom Cutouts/Holes	pg. 12 - 13

Stahlin Enclosures • 500 Maple Street, Belding, MI 48809 • Phone: 616-794-0700 • Fax: 616-794-3378 • www.stahlin.com

J Series Technical Information

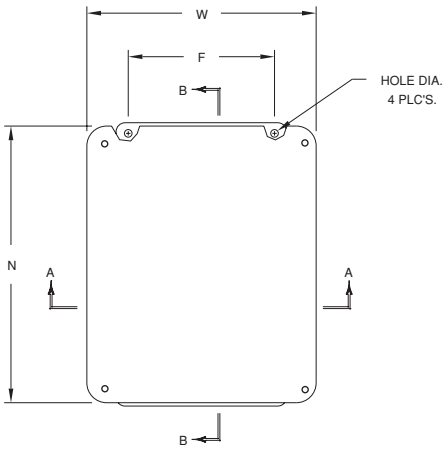

Standard Flat Cover

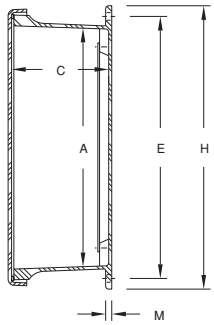

SECTION B-B

Crowned Cover

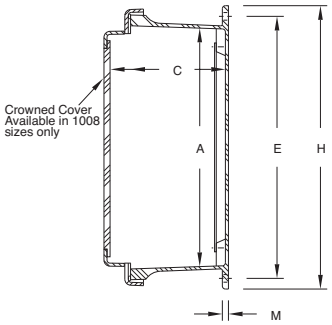

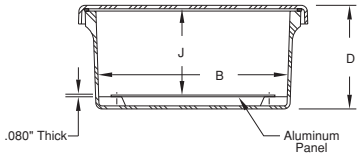

SECTION A-A

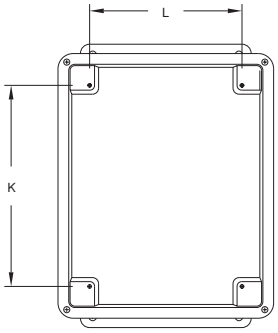

FRONT VIEW
WITHOUT COVER

J Series Enclosures - Opaque Cover

SIZE ID NUMBER	OVERALL H X W X D	INSIDE A X B X C	MOUNTING E X F	J	K	L	M	N	HOLE DIA.	SHIPPING WEIGHT	PANEL NUMBER
J1407W J1407HW*** J1407HLL J1407HPL*** J1407FHW	15.87 x 8.75 x 6.81 (403 x 222 x 173)	14.00 x 7.00 x 6.56 (356 x 178 x 167)	15.00 x 5.00 (381 x 127)	6.11 (155)	12.25 (311)	5.25 (133)	0.25 (6)	15.75 (400)	0.31 (8)	6.10 lbs.	BP1407**
J1412W J1412HW*** J1412HLL J1412HPL*** J1412FHW	15.50 x 13.48 x 6.20 (394 x 342 x 158)	13.50 x 11.52 x 5.94 (343 x 293 x 151)	14.62 x 10.00 (372 x 254)	5.36 (137)	12.25 (311)	10.25 (260)	0.25 (6)	15.48 (393)	0.31 (8)	9.90 lbs.	BP1412**
J1614W J1614HW*** J1614HLL J1614HPL*** J1614FHW	17.53 x 15.46 x 6.21 (445 x 393 x 157)	15.60 x 13.56 x 5.94 (396 x 344 x 151)	16.75 x 12.00 (425 x 305)	5.35 (136)	14.25 (362)	12.25 (311)	0.25 (6)	17.46 (444)	0.31 (8)	12.20 lbs.	BP1614**
J1816W J1816HW*** J1816HLL J1816HPL*** J1816FHW	19.63 x 17.61 x 8.81 (499 x 447 x 224)	17.69 x 15.69 x 8.45 (449 x 399 x 215)	18.88 x 12.00 (479 x 305)	7.98 (203)	16.25 (413)	14.25 (362)	0.25 (6)	19.61 (498)	0.31 (8)	20.00 lbs.	BP1816**
J2016W J2016HW*** J2016HLL J2016HPL*** J2016FHW	22.00 x 17.68 x 8.81 (559 x 449 x 224)	19.72 x 15.72 x 8.45 (501 x 399 x 215)	21.25 x 10.00 (540 x 254)	7.98 (203)	18.25 (464)	14.25 (362)	0.25 (6)	21.68 (551)	0.31 (8)	22.50 lbs.	BPJ2016**

All measures are in inches, items in parentheses are in millimeters.
*Crowned cover – center of cover raised 3/4"
** Panel ordered separately
***Available in white by placing WH prior to part number ex. WH-J604HW

Technical Specifications - J Series

Opaque Cover "W" configuration - 4 cover screws, lift off cover

W Construction

Material	Hot compression molded fiberglass reinforced polyester (thermoset)
Gasket	Poured polyurethane seamless gasket provides watertight, dust-tight environmental seal
Pan head screws	Minimized protruding surfaces
Stainless Steel Hardware	300 Series stainless used on all external hardware
Molded in Mounting Flange	Molded in flange for ease of mounting.
Mounting Bosses	Panel mounting capability for fixed rear panel
Metal inserts	Back panel utilizes threaded brass inserts accepting 10-32 screws
Soft Edge Design	Rounded edges, minimal protrusions or exposed pocket areas for assembly of dust and debris
Cover retention chain	Stainless steel beaded chain for securing cover after lift off

W Industry Standards

UL/cUL 50	File E64358 Type 1, 3R, 4X, 6P, 12
NEMA 250	Type 1, 3R, 4X, 6P, 12
CSA Std C22.2	File LR069014 Type 1, 3R, 4X, 6P, 12
Temperature Range	(-76°F to +274°F) (-60°C to +134°C)
Flammability Rating	UL94-5V
Self Extinguishing	Non-haloginated, non-flame propagating
Chemical Resistance	Full chemical resistance charts listed in appendix
NFPA No. 101 Flame Spread	Class A (1)

W Accessories

Back Panels

Aluminum	BP__AL	pg. 149 - 150
Fiberglass	BP__FG	pg. 149 - 150
Stainless Steel	BP__SS	pg. 149 - 150
Carbon Steel	BP__CS	pg. 149 - 150

Accessories

Drain & Breather Vents	pg. 144, 146
Hole Plugs	pg. 145
Assorted Hubs and Cord Grips	pg. 145, 148
All Other Accessories	pg. 144 - 159

W Modifications

Custom Colors	pg. 12 - 13
Silk Screening	pg. 12 - 13
EMI/RFI Shielding	pg. 12 - 13
Custom Window	pg. 12 - 13
Custom Cutouts/Holes	pg. 12 - 13

NOTES:

HW Technical Specifications - J Series

Opaque Cover "HW" configuration - Hinged, 2 cover screws

HW Construction

Material	Hot compression molded fiberglass reinforced polyester (thermoset). Available standard in Glacier Grey or White
Gasket	Poured polyurethane seamless gasket provides watertight, dust-tight environmental seal
Pan head screws	Minimized protruding surfaces
Stainless Steel Hardware	300 Series stainless used on all external hardware
Molded in Mounting Flange	Molded in flange for ease of mounting.
Mounting Bosses	Panel mounting capability for fixed rear panel
Metal inserts	Back panel utilizes threaded brass inserts accepting 10-32 screws
Soft Edge Design	Rounded edges, minimal protrusions or exposed pocket areas for assembly of dust and debris
Color	Available Standard in Glacier Grey or White

HW Industry Standards

UL/cUL 50	File E64358 Type 1, 3R, 4X, 6P, 12
NEMA 250	Type 1, 3R, 4X, 6P, 12
CSA Std C22.2	File LR069014 Type 1, 3R, 4X, 6P, 12
Temperature Range	(-76°F to +274°F) (-60°C to +134°C)
Flammability Rating	UL94-5V
Self Extinguishing	Non-haloginated, non-flame propagating
Chemical Resistance	Full chemical resistance charts listed in appendix
NFPA No. 101 Flame Spread	Class A (1)

NOTES:

HW Accessories

Back Panels

Aluminum	BP__AL	pg. 149 - 150
Fiberglass	BP__FG	pg. 149 - 150
Stainless Steel	BP__SS	pg. 149 - 150
Carbon Steel	BP__CS	pg. 149 - 150

Accessories

Drain & Breather Vents	pg. 144, 146
Hole Plugs	pg. 145
Assorted Hubs and Cord Grips	pg. 145, 148
All Other Accessories	pg. 144 - 159

HW Modifications

Custom Colors	pg. 12 - 13
Silk Screening	pg. 12 - 13
EMI/RFI Shielding	pg. 12 - 13
Custom Window	pg. 12 - 13
Custom Cutouts/Holes	pg. 12 - 13

Technical Specifications - J Series

Opaque Cover "HLL" configuration - Hinged, twist latch

HLL Construction

Material	Hot compression molded fiberglass reinforced polyester (thermoset)
Gasket	Poured polyurethane seamless gasket provides watertight, dust-tight environmental seal
Pan head screws	Minimized protruding surfaces
Stainless Steel Hardware	300 Series stainless used on all external hardware
Molded in Mounting Flange	Molded in flange for ease of mounting.
Mounting Bosses	Panel mounting capability for fixed rear panel
Metal inserts	Back panel utilizes threaded brass inserts accepting 10-32 screws
Soft Edge Design	Rounded edges, minimal protrusions or exposed pocket areas for assembly of dust and debris

HLL Industry Standards

UL/cUL 50	File E64358 Type 1, 3R, 4X, 6P, 12
NEMA 250	Type 1, 3R, 4X, 6P, 12
CSA Std C22.2	File LR069014 Type 1, 3R, 4X, 6P, 12
Temperature Range	(-76°F to +274°F) (-60°C to +134°C)
Flammability Rating	UL94-5V
Self Extinguishing	Non-haloginated, non-flame propagating
Chemical Resistance	Full chemical resistance charts listed in appendix
NFPA No. 101 Flame Spread	Class A (1)

HLL Accessories

Back Panels

Aluminum	BP__AL	pg. 149 - 150
Fiberglass	BP__FG	pg. 149 - 150
Stainless Steel	BP__SS	pg. 149 - 150
Carbon Steel	BP__CS	pg. 149 - 150

Accessories

Drain & Breather Vents	pg. 144, 146
Hole Plugs	pg. 145
Assorted Hubs and Cord Grips	pg. 145, 148
All Other Accessories	pg. 144 - 159

HLL Modifications

Custom Colors	pg. 12 - 13
Silk Screening	pg. 12 - 13
EMI/RFI Shielding	pg. 12 - 13
Custom Window	pg. 12 - 13
Custom Cutouts/Holes	pg. 12 - 13

NOTES:

Technical Specifications - J Series

HPL

Opaque Cover "HPL" configuration - Hinged, padlock latch

NOTES:

HPL Construction

Material	Hot compression molded fiberglass reinforced polyester (thermoset). Available standard in Glacier Grey or White
Gasket	Poured polyurethane seamless gasket provides watertight, dust-tight environmental seal
Pan head screws	Minimized protruding surfaces
Stainless Steel Hardware	300 Series stainless used on all external hardware
Molded in Mounting Flange	Molded in flange for ease of mounting.
Mounting Bosses	Panel mounting capability for fixed rear panel
Metal inserts	Back panel utilizes threaded brass inserts accepting 10-32 screws
Soft Edge Design	Rounded edges, minimal protrusions or exposed pocket areas for assembly of dust and debris
Color	Available Standard in Glacier Grey or White

HPL Industry Standards

UL/cUL 50	File E64358 Type 1, 3R, 4X, 6P, 12
NEMA 250	Type 1, 3R, 4X, 6P, 12
CSA Std C22.2	File LR069014 Type 1, 3R, 4X, 6P, 12
Temperature Range	(-76°F to +274°F) (-60°C to +134°C)
Flammability Rating	UL94-5V
Self Extinguishing	Non-haloginated, non-flame propagating
Chemical Resistance	Full chemical resistance charts listed in appendix
NFPA No. 101 Flame Spread	Class A (1)

HPL Accessories

Back Panels

Aluminum	BP__AL	pg. 149 - 150
Fiberglass	BP__FG	pg. 149 - 150
Stainless Steel	BP__SS	pg. 149 - 150
Carbon Steel	BP__CS	pg. 149 - 150

Accessories

Drain & Breather Vents	pg. 144, 146
Hole Plugs	pg. 145
Assorted Hubs and Cord Grips	pg. 145, 148
All Other Accessories	pg. 144 - 159

HPL Modifications

Custom Colors	pg. 12 - 13
Silk Screening	pg. 12 - 13
EMI/RFI Shielding	pg. 12 - 13
Custom Window	pg. 12 - 13
Custom Cutouts/Holes	pg. 12 - 13

Technical Specifications - J Series

Opaque Cover "FHW" configuration - Fiberglass hinge, four cover screws

NOTES:

FHW *Construction*

Material	Hot compression molded fiberglass reinforced polyester (thermoset)
Gasket	Poured polyurethane seamless gasket provides watertight, dust-tight environmental seal
Pan head screws	Minimized protruding surfaces
Stainless Steel Hardware	300 Series stainless used on all external hardware
Molded in Mounting Flange	Molded in flange for ease of mounting.
Mounting Bosses	Panel mounting capability for fixed rear panel
Metal inserts	Back panel utilizes threaded brass inserts accepting 10-32 screws
Soft Edge Design	Rounded edges, minimal protrusions or exposed pocket areas for assembly of dust and debris
Hinge Material	Glass filled Polybutylene Terephthalate (PBT)

FHW *Industry Standards*

UL/cUL 50	File E64358 Type 1, 3R, 4X, 6P, 12
NEMA 250	Type 1, 3R, 4X, 6P, 12
CSA Std C22.2	File LR069014 Type 1, 3R, 4X, 6P, 12
Temperature Range	(-76°F to +274°F) (-60°C to +134°C)
Flammability Rating	UL94-5V
Self Extinguishing	Non-haloginated, non-flame propagating
Chemical Resistance	Full chemical resistance charts listed in appendix
NFPA No. 101 Flame Spread	Class A (1)

FHW *Accessories*

Back Panels

Aluminum	BP__AL	pg. 149 - 150
Fiberglass	BP__FG	pg. 149 - 150
Stainless Steel	BP__SS	pg. 149 - 150
Carbon Steel	BP__CS	pg. 149 - 150

Accessories

Drain & Breather Vents	pg. 144, 146
Hole Plugs	pg. 145
Assorted Hubs and Cord Grips	pg. 145, 148
All Other Accessories	pg. 144 - 159

FHW *Modifications*

Custom Colors	pg. 12 - 13
Silk Screening	pg. 12 - 13
EMI/RFI Shielding	pg. 12 - 13
Custom Window	pg. 12 - 13
Custom Cutouts/Holes	pg. 12 - 13

Stahlin Enclosures • 500 Maple Street, Belding, MI 48809 • Phone: 616-794-0700 • Fax: 616-794-3378 • www.stahlin.com

J Series Technical Information

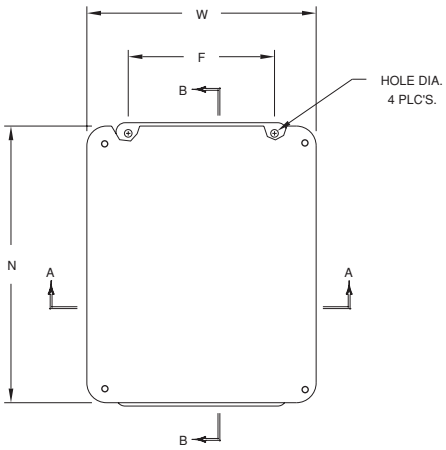

Standard Flat Cover

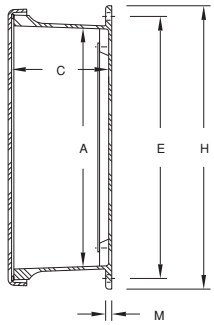

SECTION B-B

Crowned Cover

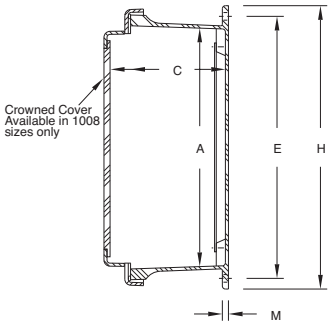

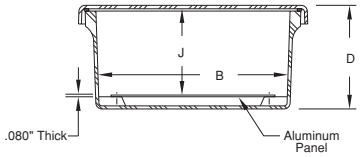

SECTION A-A

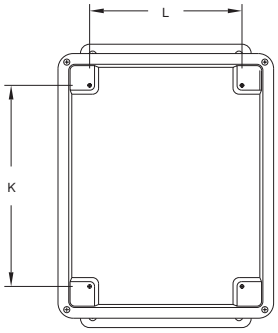

FRONT VIEW
WITHOUT COVER

J Series Enclosures - Opaque Cover

SIZE ID NUMBER	OVERALL H X W X D	INSIDE A X B X C	MOUNTING E X F	J	K	L	M	N	HOLE DIA.	SHIPPING WEIGHT	PANEL NUMBER
J1407W J1407HW*** J1407HLL J1407HPL*** J1407FHW	15.87 x 8.75 x 6.81 (403 x 222 x 173)	14.00 x 7.00 x 6.56 (356 x 178 x 167)	15.00 x 5.00 (381 x 127)	6.11 (155)	12.25 (311)	5.25 (133)	0.25 (6)	15.75 (400)	0.31 (8)	6.10 lbs.	BP1407**
J1412W J1412HW*** J1412HLL J1412HPL*** J1412FHW	15.50 x 13.48 x 6.20 (394 x 342 x 158)	13.50 x 11.52 x 5.94 (343 x 293 x 151)	14.62 x 10.00 (372 x 254)	5.36 (137)	12.25 (311)	10.25 (260)	0.25 (6)	15.48 (393)	0.31 (8)	9.90 lbs.	BP1412**
J1614W J1614HW*** J1614HLL J1614HPL*** J1614FHW	17.53 x 15.46 x 6.21 (445 x 393 x 157)	15.60 x 13.56 x 5.94 (396 x 344 x 151)	16.75 x 12.00 (425 x 305)	5.35 (136)	14.25 (362)	12.25 (311)	0.25 (6)	17.46 (444)	0.31 (8)	12.20 lbs.	BP1614**
J1816W J1816HW*** J1816HLL J1816HPL*** J1816FHW	19.63 x 17.61 x 8.81 (499 x 447 x 224)	17.69 x 15.69 x 8.45 (449 x 399 x 215)	18.88 x 12.00 (479 x 305)	7.98 (203)	16.25 (413)	14.25 (362)	0.25 (6)	19.61 (498)	0.31 (8)	20.00 lbs.	BP1816**
J2016W J2016HW*** J2016HLL J2016HPL*** J2016FHW	22.00 x 17.68 x 8.81 (559 x 449 x 224)	19.72 x 15.72 x 8.45 (501 x 399 x 215)	21.25 x 10.00 (540 x 254)	7.98 (203)	18.25 (464)	14.25 (362)	0.25 (6)	21.68 (551)	0.31 (8)	22.50 lbs.	BPJ2016**

All measures are in inches, items in parentheses are in millimeters.
*Crowned cover – center of cover raised 3/4"
** Panel ordered separately
***Available in white by placing WH prior to part number ex. WH-J604HW