Hex-Key Wrenches

Klein hex-keys are the tools professionals cannot afford to be without. Heat-treated and tempered for superior strength and durability, Klein hex-keys are designed for a precise fit in sockets, preventing slippage and stripping of the socket.

For Professionals…
Since 1857™

JOURNEYMAN

T-Handle Hex-Keys

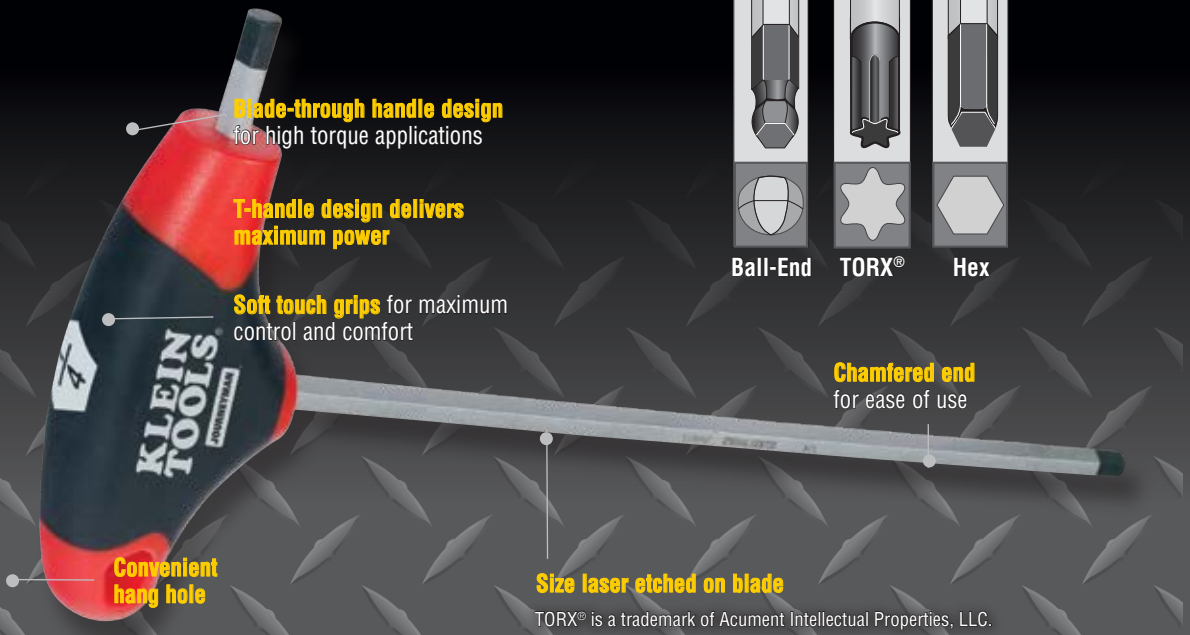

TORX® is a trademark of Acument Intellectual Properties, LLC.

T-Handle Ball-End Hex-Keys - SAE

Includes core Journeyman™ T-handle hex-key features plus:

- Short blade-through handle provides maximum tool versatility

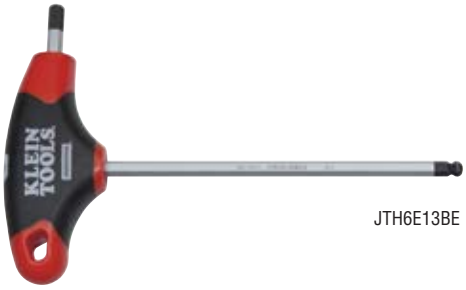

JTH6E13BE

Cat. No.	Hex Size	Blade Length	Weight
JTH6E06BE	3/32"	6" (152.4 mm)	0.64 oz (18.1 g)
JTH6E07BE	7/64"	6" (152.4 mm)	0.80 oz (22.7 g)
JTH6E08BE	1/8"	6" (152.4 mm)	1.0 oz (28 g)
JTH6E09BE	9/64"	6" (152.4 mm)	1.1 oz (31 g)
JTH6E10BE	5/32"	6" (152.4 mm)	0.12 lb (0.05 kg)
JTH6E11BE	3/16"	6" (152.4 mm)	0.14 lb (0.06 kg)

Cat. No.	Hex Size	Blade Length	Weight
JTH6E12BE	7/32"	6" (152.4 mm)	0.17 lb (0.08 kg)
JTH6E13BE	1/4"	6" (152.4 mm)	0.27 lb (0.12 kg)
JTH6E14BE	5/16"	6" (152.4 mm)	0.35 lb (0.16 kg)
JTH6E15BE	3/8"	6" (152.4 mm)	0.45 lb (0.20 kg)
JTH6E17BE	1/2"	6" (152.4 mm)	0.70 lb (0.32 kg)

T-Handle Ball-End Hex-Key Set with Stand - SAE

Includes core Journeyman™ T-handle hex-key features plus:

- Metal stand for convenient hanging, storage on bench or wall
- Short blade-through handle provides maximum tool versatility

Cat. No.	Set Contains	Weight
JTH610EB		3.0 lb (1.4 kg)

Cat. No.	Hex Size	Blade Length
JTH6E06BE	3/32"	6" (152.4 mm)
JTH6E07BE	7/64"	6" (152.4 mm)
JTH6E08BE	1/8"	6" (152.4 mm)
JTH6E09BE	9/64"	6" (152.4 mm)
JTH6E10BE	5/32"	6" (152.4 mm)
JTH6E11BE	3/16"	6" (152.4 mm)
JTH6E12BE	7/32"	6" (152.4 mm)
JTH6E13BE	1/4"	6" (152.4 mm)
JTH6E14BE	5/16"	6" (152.4 mm)
JTH6E15BE	3/8"	6" (152.4 mm)

JTH610EB

See page 310 for additional information on warnings.

JOURNEYMAN™

T-Handle Hex-Keys

T-Handle Hex-Keys - SAE

Includes core Journeyman™ T-handle hex-key features plus:

- Short blade-through handle provides maximum tool versatility

JTH6E15

Cat. No.	Hex Size	Blade Length	Weight
4" Length			
JTH4E06	3/32"	4" (101.6 mm)	0.05 oz (1.4 g)
JTH4E07	7/64"	4" (101.6 mm)	0.05 oz (1.4 g)
JTH4E08	1/8"	4" (101.6 mm)	0.05 oz (1.4 g)
JTH4E09	9/64"	4" (101.6 mm)	0.06 oz (1.7 g)
JTH4E10	5/32"	4" (101.6 mm)	0.11 oz (3.1 g)
JTH4E11	3/16"	4" (101.6 mm)	0.13 oz (3.7 g)
JTH4E12	7/32"	4" (101.6 mm)	0.14 oz (4.0 g)
JTH4E13	1/4"	4" (101.6 mm)	0.24 oz (6.8 g)
JTH4E14	5/16"	4" (101.6 mm)	0.30 oz (8.5 g)
JTH4E15	3/8"	4" (101.6 mm)	0.38 oz (10.8 g)
JTH4E17	1/2"	4" (101.6 mm)	0.59 oz (16.7 g)
6" Length			
JTH6E06	3/32"	6" (152.4 mm)	0.05 oz (1.4 g)
JTH6E07	7/64"	6" (152.4 mm)	0.05 oz (1.4 g)
JTH6E08	1/8"	6" (152.4 mm)	0.05 oz (1.4 g)
JTH6E09	9/64"	6" (152.4 mm)	0.06 oz (1.7 g)
JTH6E10	5/32"	6" (152.4 mm)	0.11 oz (3.1 g)
JTH6E11	3/16"	6" (152.4 mm)	0.13 oz (3.7 g)
JTH6E12	7/32"	6" (152.4 mm)	0.14 oz (4.0 g)
JTH6E13	1/4"	6" (152.4 mm)	0.24 oz (6.8 g)
JTH6E14	5/16"	6" (152.4 mm)	0.30 oz (8.5 g)
JTH6E15	3/8"	6" (152.4 mm)	0.38 oz (10.8 g)
JTH6E17	1/2"	6" (152.4 mm)	0.59 oz (16.7 g)
9" Length			
JTH9E06	3/32"	9" (228.6 mm)	0.05 oz (1.4 g)
JTH9E07	7/64"	9" (228.6 mm)	0.05 oz (1.4 g)
JTH9E08	1/8"	9" (228.6 mm)	0.06 oz (1.7 g)
JTH9E09	9/64"	9" (228.6 mm)	0.06 oz (1.7 g)
JTH9E10	5/32"	9" (228.6 mm)	0.11 oz (3.1 g)
JTH9E11	3/16"	9" (228.6 mm)	0.14 oz (4.0 g)
JTH9E12	7/32"	9" (228.6 mm)	0.18 oz (5.1 g)
JTH9E13	1/4"	9" (228.6 mm)	0.27 oz (7.7 g)
JTH9E14	5/16"	9" (228.6 mm)	0.35 oz (9.9 g)
JTH9E15	3/8"	9" (228.6 mm)	0.45 oz (12.8 g)
JTH9E17	1/2"	9" (228.6 mm)	0.70 oz (19.8 g)

T-Handle Hex-Key Sets with Stand - SAE

Includes core Journeyman™ T-handle hex-key features plus:

- Metal stand for convenient mounting on bench or wall
- Short blade-through handle provides maximum tool versatility

JTH610E

Cat. No.	Set Contains			Weight
JTH410E	T-Handle Set with Stand, SAE, 4" Blade 10 Pc			2.7 lb (1.2 kg)
	Cat. No.	**Hex Size**	**Blade Length**	
	JTH4E06	3/32"	4" (101.6 mm)	
	JTH4E07	7/64"	4" (101.6 mm)	
	JTH4E08	1/8"	4" (101.6 mm)	
	JTH4E09	9/64"	4" (101.6 mm)	
	JTH4E10	5/32"	4" (101.6 mm)	
	JTH4E11	3/16"	4" (101.6 mm)	
	JTH4E12	7/32"	4" (101.6 mm)	
	JTH4E13	1/4"	4" (101.6 mm)	
	JTH4E14	5/16"	4" (101.6 mm)	
	JTH4E15	3/8"	4" (101.6 mm)	
Cat. No.	**Set Contains**			**Weight**
JTH610E	T-Handle Set with Stand, SAE, 6" Blade 10 Pc			2.7 lb (1.2 kg)
	Cat. No.	**Hex Size**	**Blade Length**	
	JTH6E06	3/32"	6" (152.4 mm)	
	JTH6E07	7/64"	6" (152.4 mm)	
	JTH6E08	1/8"	6" (152.4 mm)	
	JTH6E09	9/64"	6" (152.4 mm)	
	JTH6E10	5/32"	6" (152.4 mm)	
	JTH6E11	3/16"	6" (152.4 mm)	
	JTH6E12	7/32"	6" (152.4 mm)	
	JTH6E13	1/4"	6" (152.4 mm)	
	JTH6E14	5/16"	6" (152.4 mm)	
	JTH6E15	3/8"	6" (152.4 mm)	
Cat. No.	**Set Contains**			**Weight**
JTH910E	T-Handle Set with Stand, SAE, 9" Blade 10 Pc			3.6 lb (1.6 kg)
	Cat. No.	**Hex Size**	**Blade Length**	
	JTH9E06	3/32"	9" (228.6 mm)	
	JTH9E07	7/64"	9" (228.6 mm)	
	JTH9E08	1/8"	9" (228.6 mm)	
	JTH9E09	9/64"	9" (228.6 mm)	
	JTH9E10	5/32"	9" (228.6 mm)	
	JTH9E11	3/16"	9" (228.6 mm)	
	JTH9E12	7/32"	9" (228.6 mm)	
	JTH9E13	1/4"	9" (228.6 mm)	
	JTH9E14	5/16"	9" (228.6 mm)	
	JTH9E15	3/8"	9" (228.6 mm)	

See page 310 for additional information on warnings.

JOURNEYMAN™

T-Handle Hex-Keys

T-Handle Ball-End Hex-Keys - Metric

Includes core Journeyman™ T-handle hex-key features plus:

- Short blade-through handle provides maximum tool versatility

Cat. No.	Hex Size	Blade Length	Weight
JTH6M2BE	2 mm	6" (152.4 mm)	0.64 oz (18.1 g)
JTH6M25BE	2.5 mm	6" (152.4 mm)	0.80 oz (22.7 g)
JTH6M3BE	3 mm	6" (152.4 mm)	1.0 oz (28 g)
JTH6M4BE	4 mm	6" (152.4 mm)	1.1 oz (31 g)
JTH6M5BE	5 mm	6" (152.4 mm)	0.15 lb (0.07 kg)
JTH6M6BE	6 mm	6" (152.4 mm)	0.19 lb (0.09 kg)
JTH6M8BE	8 mm	6" (152.4 mm)	0.35 lb (0.16 kg)
JTH6M10BE	10 mm	6" (152.4 mm)	0.48 lb (0.22 kg)

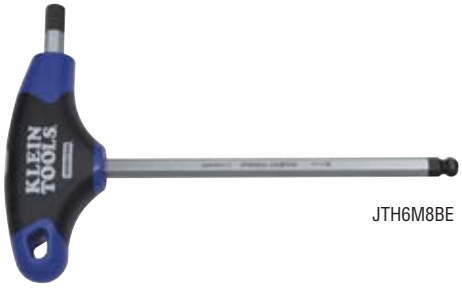

JTH6M8BE

T-Handle Ball-End Hex-Key Set with Stand - Metric

Includes core Journeyman™ T-handle hex-key features plus:

- Metal stand for convenient mounting on bench or wall
- Short blade-through handle provides maximum tool versatility

Cat. No.	Set Contains			Weight
JTH68MB				2.7 lb (1.2 kg)
	Cat. No.	**Hex Size**	**Blade Length**	
	JTH6M2BE	2 mm	6" (152.4 mm)	
	JTH6M25BE	2.5 mm	6" (152.4 mm)	
	JTH6M3BE	3 mm	6" (152.4 mm)	
	JTH6M4BE	4 mm	6" (152.4 mm)	
	JTH6M5BE	5 mm	6" (152.4 mm)	
	JTH6M6BE	6 mm	6" (152.4 mm)	
	JTH6M8BE	8 mm	6" (152.4 mm)	
	JTH6M10BE	10 mm	6" (152.4 mm)	

JTH68MB

T-Handle Hex-Keys - Metric

Includes core Journeyman™ T-handle hex-key features plus:

- Short blade-through handle provides maximum tool versatility

Cat. No.	Hex Size	Blade Length	Weight
JTH6M2	2 mm	6" (152.4 mm)	0.64 oz (18.1 g)
JTH6M25	2.5 mm	6" (152.4 mm)	0.80 oz (22.7 g)
JTH6M3	3 mm	6" (152.4 mm)	1.0 oz (28 g)
JTH6M4	4 mm	6" (152.4 mm)	0.10 oz (2.8 g)
JTH6M5	5 mm	6" (152.4 mm)	0.15 lb (0.07 kg)
JTH6M6	6 mm	6" (152.4 mm)	0.17 lb (0.08 kg)
JTH6M8	8 mm	6" (152.4 mm)	0.35 lb (0.16 kg)
JTH6M10	10 mm	6" (152.4 mm)	0.48 lb (0.22 kg)
JTH9M10	10 mm	9" (228.6 mm)	0.48 oz (13.6 g)
JTH9M2	2 mm	9" (228.6 mm)	0.05 oz (1.4 g)
JTH9M25	2.5 mm	9" (228.6 mm)	0.05 oz (1.4 g)
JTH9M3	3 mm	9" (228.6 mm)	0.06 oz (1.7 g)
JTH9M4	4 mm	9" (228.6 mm)	1.4 oz (40 g)
JTH9M5	5 mm	9" (228.6 mm)	0.18 oz (5.1 g)
JTH9M6	6 mm	9" (228.6 mm)	0.22 oz (6.2 g)
JTH9M8	8 mm	9" (228.6 mm)	0.42 oz (11.9 g)

JTH6M8

See page 310 for additional information on warnings.

JOURNEYMAN™

T-Handle Hex-Keys

T-Handle Hex-Key Sets with Stand - Metric

Includes core Journeyman™ T-handle hex-key features plus:

- Metal stand for convenient mounting on bench or wall
- Short blade-through handle provides maximum tool versatility

JTH68M

Cat. No.	Set Contains	Weight
JTH68M	6" Metric Journeyman T-Handle Set 8 Pc	1.8 lb (0.8 kg)

Cat. No.	Hex Size	Blade Length
JTH6M2	2 mm	6" (152.4 mm)
JTH6M25	2.5 mm	6" (152.4 mm)
JTH6M3	3 mm	6" (152.4 mm)
JTH6M4	4 mm	6" (152.4 mm)
JTH6M5	5 mm	6" (152.4 mm)
JTH6M6	6 mm	6" (152.4 mm)
JTH6M8	8 mm	6" (152.4 mm)
JTH6M10	10 mm	6" (152.4 mm)

Cat. No.	Set Contains	Weight
JTH98M	9" Metric Journeyman T-Handle Set 8 Pc	2.1 lb (1.0 kg)

Cat. No.	Hex Size	Blade Length
JTH9M2	2 mm	9" (228.6 mm)
JTH9M25	2.5 mm	9" (228.6 mm)
JTH9M3	3 mm	9" (228.6 mm)
JTH9M4	4 mm	9" (228.6 mm)
JTH9M5	5 mm	9" (228.6 mm)
JTH9M6	6 mm	9" (228.6 mm)
JTH9M8	8 mm	9" (228.6 mm)
JTH9M10	10 mm	9" (228.6 mm)

T-Handle Hex-Keys - TORX®

Includes core features plus:

- Short blade-through handle provides maximum tool versatility

Cat. No.	Hex Size	Blade Length	Weight
JTH6T10	T10	6" (152.4 mm)	0.80 oz (22.7 g)
JTH6T15	T15	6" (152.4 mm)	1.0 oz (28 g)
JTH6T20	T20	6" (152.4 mm)	1.1 oz (31 g)
JTH6T25	T25	6" (152.4 mm)	0.13 lb (0.06 kg)
JTH6T27	T27	6" (152.4 mm)	0.16 lb (0.07 kg)
JTH6T30	T30	6" (152.4 mm)	0.18 lb (0.08 kg)
JTH6T40	T40	6" (152.4 mm)	0.29 lb (0.13 kg)

TORX® is a trademark of Acument Intellectual Properties, LLC.

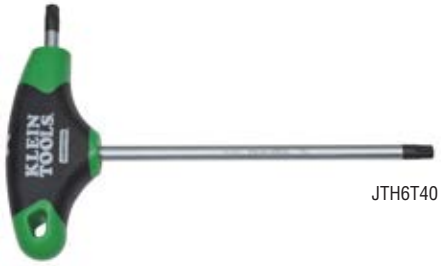

JTH6T40

T-Handle Hex-Key Set with Stand - TORX®

Includes core features plus:

- Metal stand for convenient mounting on bench or wall
- Short blade-through handle provides maximum tool versatility

Cat. No.	Set Contains	Weight
JTH67T	6" Torx® T-Handle Set with Stand 7 Pc	1.3 lb (0.6 kg)

Cat. No.	Hex Size	Blade Length
JTH6T10	T10	6" (152.4 mm)
JTH6T15	T15	6" (152.4 mm)
JTH6T20	T20	6" (152.4 mm)
JTH6T25	T25	6" (152.4 mm)
JTH6T27	T27	6" (152.4 mm)
JTH6T30	T30	6" (152.4 mm)
JTH6T40	T40	6" (152.4 mm)

TORX® is a trademark of Acument Intellectual Properties, LLC.

JTH67T

See page 310 for additional information on warnings.

Folding Hex-Key Sets

Hex-Key Sets

- Two key positions (straight-out or right angle) for extra leverage
- Hex ends are square-cut for a secure full-depth fit and maximum contact with the hex socket to prevent slippage and stripping of the socket
- Handy sets fit in your pocket or tool box easily and help eliminate the lost key problem
- Made in the U.S.A.

Improved Strength

70579

Cat. No.	Description	Size	Handle Length	Key Lengths	Color	Weight
70591	Nine-Key Inch Folding Hex Key Set	5/64", 3/32", 7/64", 1/8", 9/64", 5/32", 3/16", 7/32", 1/4"	4-3/8" (111.1 mm)	2-11/16" to 3-13/16" (68.3 to 96.8 mm)	Silver	0.50 lb (0.23 kg)
70581	Eight-Key Inch Folding Hex Key Set	1/20", 1/16", 5/64", 3/32", 7/64", 1/8", 9/64", 5/32"	3-1/16" (77.8 mm)	1-7/8" to 3" (47.6 to 76.2 mm)	Silver	0.20 lb (0.09 kg)
70579	Five-Key Inch Folding Hex Key Set	3/16", 7/32", 1/4", 5/16", 3/8"	5-3/8" (136.5 mm)	2-11/16" to 3-13/16" (68.3 to 96.8 mm)	Silver	0.85 lb (0.39 kg)
70582	Seven-Key Metric Folding Hex Key Set	1-1/2 mm, 2 mm, 2-1/2 mm, 3 mm, 4 mm, 5 mm, 6 mm	3-45/64" (94 mm)	19/32" to 1-25/32" (15 to 45 mm)	Silver	0.27 lb (0.12 kg)
70580	Six-Key Metric Folding Hex Key Set	3 mm, 4 mm, 5 mm, 6 mm, 8 mm, 10 mm	5-3/8" (136.5 mm)	2-3/8" to 4" (60 to 101 mm)	Silver	0.85 lb (0.39 kg)

Grip-It™ Hex-Key Sets

- Blades rotate independently up to 270°
- Precision fit so hex tool end reduces stripping problems. Keys are industrial strength, impact-resistant and tested for performance to below freezing
- Glass-reinforced nylon handle
- Hex ends are square-cut for a secure full-depth fit and maximum contact with the hex socket to prevent slippage and stripping of the socket (Cat. Nos. 70570, 70573, 70574, and 70575)
- Ball design allows for a thicker neck diameter increasing torque capacity, while maintaining operational angles to 25% (Cat. Nos. 70571 and 70572)
- Made in the U.S.A.

70570

Cat. No.	Description	Size	Handle Length	Key Lengths	Color	Weight
70570	Grip-It® Five Key Hex Set - Inch	3/16", 7/32", 1/4", 5/16", 3/8"	4-7/16" (112.7 mm)	1-37/64" to 1-31/32" (40.1 to 50.0 mm)	Yellow	0.58 lb (0.26 kg)
70571	Grip-It® Five Key Ball Hex Set - Inch	3/16", 7/32", 1/4", 5/16", 3/8"	4-7/16" (112.7 mm)	1-35/64" to2" (39.3 mm to 50.8 mm)	Yellow	0.58 lb (0.26 kg)
70572	Grip-It® Five Key Ball Hex Set - Metric	5 mm, 6 mm, 7 mm, 8 mm, 10 mm	4-7/16" (112.7 mm)	1-19/32" to 1-15/16" (40.5 to 49.2 mm)	Red	0.58 lb (0.26 kg)
70573	Grip-It® 12 Key Hex Set - Inch/Metric	5/64", 3/32", 7/64", 1/8", 9/64", 5/32", 1.5 mm, 2 mm, 2.5 mm, 3 mm, 4 mm, 5 mm	4-7/16" (112.7 mm)	1-7/16" to 2-17/64" (36.5 to 57.6 mm)	Blue	0.30 lb (0.14 kg)
70574	Grip-It® Nine Key Hex Set 2 Positions	5/64", 3/32", 7/64", 1/8", 9/64", 5/32", 3/16", 7/32", 1/4"	4-7/16" (112.7 mm)	1-3/4" to 2-17/64" (44.5 to 57.6 mm)	Yellow	0.33 lb (0.15 kg)
70575	Grip-It® Nine Key Hex Set Square Cut	3/64", 1/16", 5/64", 3/32", 7/64", 1/8", 9/64", 5/32", 3/16"	3-13/16" (96.8 mm)	1-25/64" to 1-27/32" (35.3 to 46.8 mm)	Yellow	0.20 lb (0.09 kg)

TORX® Sets

Folding TORX® Set

- TORX® drive cuts slippage, saves fasteners, efficiently transmits more torque to the work
- Keys are tough, heat-treated chrome-nickel alloy steel for strength and durability
- Keys fold flat into handle
- Can be used straight out or at an angle for extra leverage

70586

Cat. No.	Size	Handle Length	Key Lengths	Color	Weight
70586	T10, T15, T20, T25, T27, T30, T40	4-3/8" (111.1 mm)	2-13/16" to 3" (71.4 to 76.2 mm)	Silver	0.30 lb (0.14 kg)

TORX® is a trademark of Acument Intellectual Properties, LLC.

L-Style Hex-Keys

Rust and corrosion resistant surfaces

Top-grade alloy steel

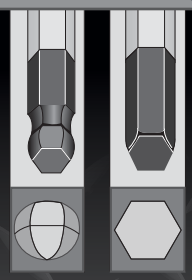

Extra length for hard-to-reach applications

Heat-treated and tempered for added strength and durability

Short length for higher torque situations and low clearances

MADE IN USA

LL8

L-Style Hex-Keys

Includes core L-Style hex key features plus:

- Allows easy access, even in restricted areas

Cat. No.	Hex Size	Short Arm Length	Long Arm Length	Weight
LL2	0.050"	9/16" (14.28 mm)	2-7/8" (73.0 mm)	0.08 oz (2.3 g)
LL4	1/16"	5/8" (15.87 mm)	3-1/16" (77.8 mm)	0.08 oz (2.3 g)
LL5	5/64"	11/16" (17.46 mm)	3-1/4" (82.6 mm)	0.08 oz (2.3 g)
LL6	3/32"	3/4" (19.05 mm)	3-1/2" (88.9 mm)	0.16 oz (4.5 g)
LL7	7/64"	13/16" (20.63 mm)	3-11/16" (93.7 mm)	0.32 oz (9.1 g)
LL8	1/8"	7/8" (22.22 mm)	3-7/8" (98.4 mm)	0.32 oz (9.1 g)
LL9	9/64"	15/16" (23.81 mm)	4-1/8" (104.8 mm)	0.48 oz (13.6 g)
LL10	5/32"	1" (25.4 mm)	4-3/8" (111.1 mm)	0.48 oz (13.6 g)
LL12	3/16"	1-1/8" (28.57 mm)	4-11/16" (119.1 mm)	0.80 oz (22.7 g)
LL14	7/32"	1-1/4" (31.75 mm)	5-1/16" (128.6 mm)	0.70 lb (0.32 kg)
LL16	1/4"	1-3/8" (34.92 mm)	5-1/2" (139.7 mm)	0.10 lb (0.05 kg)
LL20	5/16"	1-9/16" (39.68 mm)	6-5/16" (160.33 mm)	0.18 lb (0.08 kg)
LL24	3/8"	1-3/4" (44.45 mm)	7-1/8" (181.0 mm)	0.25 lb (0.11 kg)
Metric				
LLM15	1.5 mm	9/16" (14.28 mm)	3-1/8" (79.4 mm)	0.08 oz (2.3 g)
LLM2	2 mm	11/16" (17.46 mm)	3-1/32" (77.0 mm)	0.08 oz (2.3 g)
LLM25	2.5 mm	13/16" (20.63 mm)	3-9/16" (90.5 mm)	0.16 oz (4.5 g)
LLM3	3 mm	7/8" (22.22 mm)	4" (101.6 mm)	0.32 oz (9.1 g)
LLM4	4 mm	1" (25.4 mm)	4-1/2" (114.3 mm)	0.48 oz (13.6 g)
LLM5	5 mm	1-1/4" (31.75 mm)	4-7/8" (123.8 mm)	0.80 oz (22.7 g)
LLM6	6 mm	1-7/16" (36.51 mm)	5-11/16" (144.5 mm)	1.3 oz (37 g)
LLM8	8 mm	1-11/16" (42.86 mm)	6-5/16" (160.33 mm)	0.15 lb (0.07 kg)
LLM10	10 mm	1-15/16" (49.21 mm)	7-1/8" (181.0 mm)	0.25 lb (0.11 kg)

BL8

L-Style Ball-End Hex-Keys

Includes core L-Style hex key features plus:

- Allows easy access, even in restricted areas
- Ball-end works on angles up to 30°

Cat. No.	Hex Size	Short Arm Length	Long Arm Length	Weight
BL2	0.050"	9/16" (14.28 mm)	2-7/8" (73.0 mm)	0.03 oz (0.9 g)
BL4	1/16"	5/8" (15.87 mm)	3-1/16" (77.8 mm)	0.03 oz (0.9 g)
BL5	5/64"	11/16" (17.46 mm)	3-1/4" (82.6 mm)	0.08 oz (2.3 g)
BL6	3/32"	3/4" (19.05 mm)	3-1/2" (88.9 mm)	0.08 oz (2.3 g)
BL7	7/64"	3/4" (19.05 mm)	3-11/16" (93.7 mm)	0.16 oz (4.5 g)
BL8	1/8"	7/8" (22.22 mm)	3-7/8" (98.4 mm)	0.32 oz (9.1 g)
BL9	9/64"	15/16" (23.81 mm)	4-1/8" (104.8 mm)	0.32 oz (9.1 g)
BL10	5/32"	1" (25.4 mm)	4-3/8" (111.1 mm)	0.48 oz (13.6 g)
BL12	3/16"	1-1/8" (28.57 mm)	4-11/16" (119.1 mm)	0.80 oz (22.7 g)
BL14	7/32"	1-1/4" (31.75 mm)	5-1/16" (128.6 mm)	1.0 oz (28 g)
BL16	1/4"	1-3/8" (34.92 mm)	5-13/16" (147.6 mm)	1.4 oz (40 g)
BL20	5/16"	1-9/16" (39.68 mm)	6-5/16" (160.33 mm)	0.17 lb (0.08 kg)
BL24	3/8"	1-3/4" (44.45 mm)	7-1/8" (181.0 mm)	0.23 lb (0.10 kg)
Metric				
BLM15	1.5 mm	9/16" (14.28 mm)	3-1/16" (77.8 mm)	0.16 oz (4.5 g)
BLM2	2 mm	11/16" (17.46 mm)	3-5/16" (84.1 mm)	0.16 oz (4.5 g)
BLM25	2.5 mm	13/16" (20.63 mm)	3-9/16" (90.5 mm)	0.16 oz (4.5 g)
BLM3	3 mm	7/8" (22.22 mm)	4" (101.6 mm)	0.32 oz (9.1 g)
BLM4	4 mm	1" (25.4 mm)	4-1/2" (114.3 mm)	0.48 oz (13.6 g)
BLM5	5 mm	1-1/4" (31.75 mm)	4-7/8" (123.8 mm)	0.80 oz (22.7 g)
BLM6	6 mm	1-7/16" (36.51 mm)	5-11/16" (144.5 mm)	1.3 oz (37 g)
BLM8	8 mm	1-11/16" (42.86 mm)	6-5/16" (160.33 mm)	0.14 lb (0.06 kg)
BLM10	10 mm	1-15/16" (49.21 mm)	6-1/8" (155.6 mm)	0.24 lb (0.11 kg)

See page 310 for additional information on warnings.

L-Style Hex-Key Sets

L-Style Caddy Sets

Includes core L-Style hex key features plus:

- L-style hex-keys organized in convenient, durable caddy sets
- Each set contains a unique locking feature and marked slots for each key
- Ball-end works on angles up to 30° (Cat. Nos. BLK12 and BLMK10)

BLK12

LMK10

Cat. No.	Set Contains	Weight
BLK12	L Style Ball End Hex Key Caddy Set 12 Pc	0.53 lb (0.24 kg)

Cat. No.	Hex Size	Short Arm Length	Long Arm Length
BL2	0.050"	9/16" (14.28 mm)	2-7/8" (73.0 mm)
BL4	1/16"	5/8" (15.87 mm)	3-1/16" (77.8 mm)
BL5	5/64"	11/16" (17.46 mm)	3-1/4" (82.6 mm)
BL6	3/32"	3/4" (19.05 mm)	3-1/2" (88.9 mm)
BL7	7/64"	3/4" (19.05 mm)	3-11/16" (93.7 mm)
BL8	1/8"	7/8" (22.22 mm)	3-7/8" (98.4 mm)
BL9	9/64"	15/16" (23.81 mm)	4-1/8" (104.8 mm)
BL10	5/32"	1" (25.4 mm)	4-3/8" (111.1 mm)
BL12	3/16"	1-1/8" (28.57 mm)	4-11/16" (119.1 mm)
BL14	7/32"	1-1/4" (31.75 mm)	5-1/16" (128.6 mm)
BL16	1/4"	1-3/8" (34.92 mm)	5-13/16" (147.6 mm)
BL20	5/16"	1-9/16" (39.68 mm)	6-5/16" (160.33 mm)

Cat. No.	Set Contains	Weight
BLMK10	L Style Ball End Hex Key Caddy Set Metric 9 Pc	0.62 lb (0.28 kg)

Cat. No.	Hex Size	Short Arm Length	Long Arm Length
BLM15	1.5 mm	9/16" (14.28 mm)	3-1/16" (77.8 mm)
BLM2	2 mm	11/16" (17.46 mm)	3-5/16" (84.1 mm)
BLM25	2.5 mm	13/16" (20.63 mm)	3-9/16" (90.5 mm)
BLM3	3 mm	7/8" (22.22 mm)	4" (101.6 mm)
BLM4	4 mm	1" (25.4 mm)	4-1/2" (114.3 mm)
BLM5	5 mm	1-1/4" (31.75 mm)	4-7/8" (123.8 mm)
BLM6	6 mm	1-7/16" (36.51 mm)	5-11/16" (144.5 mm)
BLM8	8 mm	1-11/16" (42.86 mm)	6-5/16" (160.33 mm)
BLM10	10 mm	1-15/16" (49.21 mm)	6-1/8" (155.6 mm)

Cat. No.	Set Contains	Weight
LLK12	L-Style Hex Key Caddy Set 12 Pc	0.54 lb (0.24 kg)

Cat. No.	Hex Size	Short Arm Length	Long Arm Length
LL2	0.050"	9/16" (14.28 mm)	2-7/8" (73.0 mm)
LL4	1/16"	5/8" (15.87 mm)	3-1/16" (77.8 mm)
LL5	5/64"	11/16" (17.46 mm)	3-1/4" (82.6 mm)
LL6	3/32"	3/4" (19.05 mm)	3-1/2" (88.9 mm)
LL7	7/64"	13/16" (20.63 mm)	3-11/16" (93.7 mm)
LL8	1/8"	7/8" (22.22 mm)	3-7/8" (98.4 mm)
LL9	9/64"	15/16" (23.81 mm)	4-1/8" (104.8 mm)
LL10	5/32"	1" (25.4 mm)	4-3/8" (111.1 mm)
LL12	3/16"	1-1/8" (28.57 mm)	4-11/16" (119.1 mm)
LL14	7/32"	1-1/4" (31.75 mm)	5-1/16" (128.6 mm)
LL16	1/4"	1-3/8" (34.92 mm)	5-1/2" (139.7 mm)
LL20	5/16"	1-9/16" (39.68 mm)	6-5/16" (160.33 mm)

Cat. No.	Set Contains	Weight
LMK10	L-Style Hex Key Caddy Set Metric 9 Pc	0.63 lb (0.29 kg)

Cat. No.	Hex Size	Short Arm Length	Long Arm Length
LLM15	1.5 mm	9/16" (14.28 mm)	3-1/8" (79.4 mm)
LLM2	2 mm	11/16" (17.46 mm)	3-1/32" (77.0 mm)
LLM25	2.5 mm	13/16" (20.63 mm)	3-9/16" (90.5 mm)
LLM3	3 mm	7/8" (22.22 mm)	4" (101.6 mm)
LLM4	4 mm	1" (25.4 mm)	4-1/2" (114.3 mm)
LLM5	5 mm	1-1/4" (31.75 mm)	4-7/8" (123.8 mm)
LLM6	6 mm	1-7/16" (36.51 mm)	5-11/16" (144.5 mm)
LLM8	8 mm	1-11/16" (42.86 mm)	6-5/16" (160.33 mm)
LLM10	10 mm	1-15/16" (49.21 mm)	7-1/8" (181.0 mm)

Hex-Key Wrenches

Klein hex-keys are the tools professionals cannot afford to be without. Heat-treated and tempered for superior strength and durability, Klein hex-keys are designed for a precise fit in sockets, preventing slippage and stripping of the socket.

For Professionals…
Since 1857™

JOURNEYMAN

T-Handle Hex-Keys

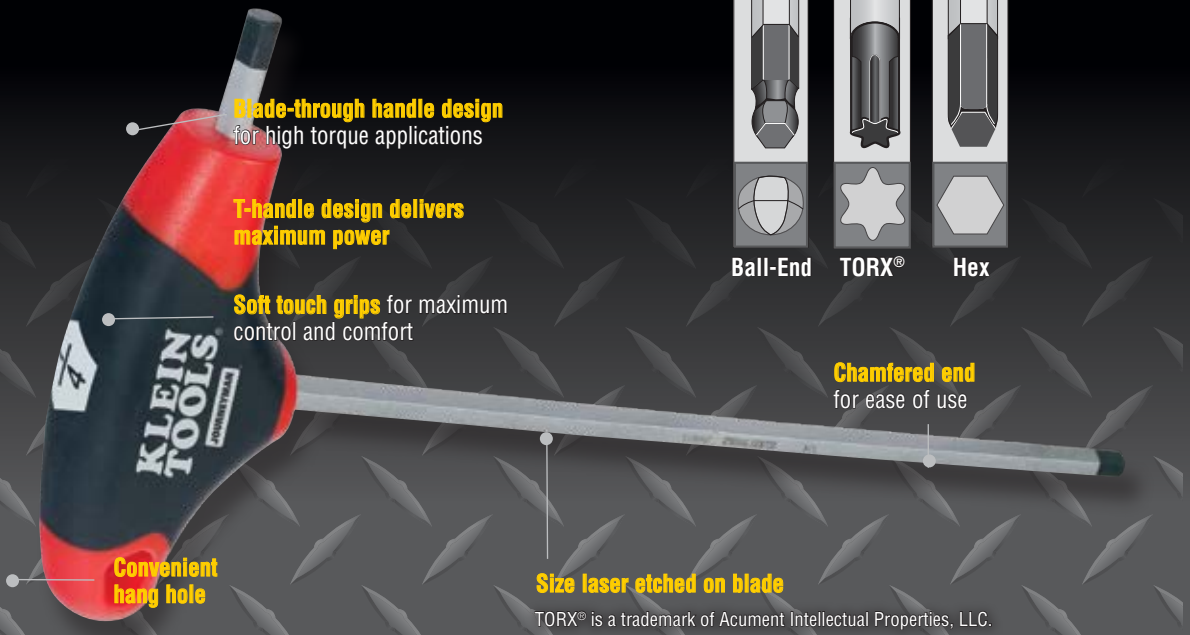

TORX® is a trademark of Acument Intellectual Properties, LLC.

T-Handle Ball-End Hex-Keys - SAE

Includes core Journeyman™ T-handle hex-key features plus:

- Short blade-through handle provides maximum tool versatility

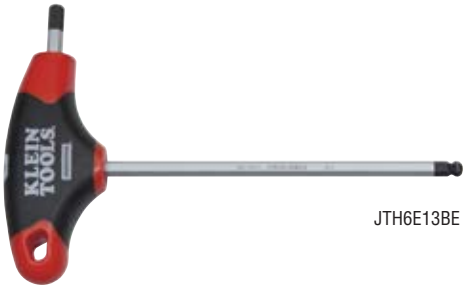

JTH6E13BE

Cat. No.	Hex Size	Blade Length	Weight
JTH6E06BE	3/32"	6" (152.4 mm)	0.64 oz (18.1 g)
JTH6E07BE	7/64"	6" (152.4 mm)	0.80 oz (22.7 g)
JTH6E08BE	1/8"	6" (152.4 mm)	1.0 oz (28 g)
JTH6E09BE	9/64"	6" (152.4 mm)	1.1 oz (31 g)
JTH6E10BE	5/32"	6" (152.4 mm)	0.12 lb (0.05 kg)
JTH6E11BE	3/16"	6" (152.4 mm)	0.14 lb (0.06 kg)

Cat. No.	Hex Size	Blade Length	Weight
JTH6E12BE	7/32"	6" (152.4 mm)	0.17 lb (0.08 kg)
JTH6E13BE	1/4"	6" (152.4 mm)	0.27 lb (0.12 kg)
JTH6E14BE	5/16"	6" (152.4 mm)	0.35 lb (0.16 kg)
JTH6E15BE	3/8"	6" (152.4 mm)	0.45 lb (0.20 kg)
JTH6E17BE	1/2"	6" (152.4 mm)	0.70 lb (0.32 kg)

T-Handle Ball-End Hex-Key Set with Stand - SAE

Includes core Journeyman™ T-handle hex-key features plus:

- Metal stand for convenient hanging, storage on bench or wall
- Short blade-through handle provides maximum tool versatility

Cat. No.	Set Contains	Weight
JTH610EB		3.0 lb (1.4 kg)

Cat. No.	Hex Size	Blade Length
JTH6E06BE	3/32"	6" (152.4 mm)
JTH6E07BE	7/64"	6" (152.4 mm)
JTH6E08BE	1/8"	6" (152.4 mm)
JTH6E09BE	9/64"	6" (152.4 mm)
JTH6E10BE	5/32"	6" (152.4 mm)
JTH6E11BE	3/16"	6" (152.4 mm)
JTH6E12BE	7/32"	6" (152.4 mm)
JTH6E13BE	1/4"	6" (152.4 mm)
JTH6E14BE	5/16"	6" (152.4 mm)
JTH6E15BE	3/8"	6" (152.4 mm)

JTH610EB

See page 310 for additional information on warnings.

JOURNEYMAN™

T-Handle Hex-Keys

T-Handle Hex-Keys - SAE

Includes core Journeyman™ T-handle hex-key features plus:

- Short blade-through handle provides maximum tool versatility

JTH6E15

Cat. No.	Hex Size	Blade Length	Weight
4" Length			
JTH4E06	3/32"	4" (101.6 mm)	0.05 oz (1.4 g)
JTH4E07	7/64"	4" (101.6 mm)	0.05 oz (1.4 g)
JTH4E08	1/8"	4" (101.6 mm)	0.05 oz (1.4 g)
JTH4E09	9/64"	4" (101.6 mm)	0.06 oz (1.7 g)
JTH4E10	5/32"	4" (101.6 mm)	0.11 oz (3.1 g)
JTH4E11	3/16"	4" (101.6 mm)	0.13 oz (3.7 g)
JTH4E12	7/32"	4" (101.6 mm)	0.14 oz (4.0 g)
JTH4E13	1/4"	4" (101.6 mm)	0.24 oz (6.8 g)
JTH4E14	5/16"	4" (101.6 mm)	0.30 oz (8.5 g)
JTH4E15	3/8"	4" (101.6 mm)	0.38 oz (10.8 g)
JTH4E17	1/2"	4" (101.6 mm)	0.59 oz (16.7 g)
6" Length			
JTH6E06	3/32"	6" (152.4 mm)	0.05 oz (1.4 g)
JTH6E07	7/64"	6" (152.4 mm)	0.05 oz (1.4 g)
JTH6E08	1/8"	6" (152.4 mm)	0.05 oz (1.4 g)
JTH6E09	9/64"	6" (152.4 mm)	0.06 oz (1.7 g)
JTH6E10	5/32"	6" (152.4 mm)	0.11 oz (3.1 g)
JTH6E11	3/16"	6" (152.4 mm)	0.13 oz (3.7 g)
JTH6E12	7/32"	6" (152.4 mm)	0.14 oz (4.0 g)
JTH6E13	1/4"	6" (152.4 mm)	0.24 oz (6.8 g)
JTH6E14	5/16"	6" (152.4 mm)	0.30 oz (8.5 g)
JTH6E15	3/8"	6" (152.4 mm)	0.38 oz (10.8 g)
JTH6E17	1/2"	6" (152.4 mm)	0.59 oz (16.7 g)
9" Length			
JTH9E06	3/32"	9" (228.6 mm)	0.05 oz (1.4 g)
JTH9E07	7/64"	9" (228.6 mm)	0.05 oz (1.4 g)
JTH9E08	1/8"	9" (228.6 mm)	0.06 oz (1.7 g)
JTH9E09	9/64"	9" (228.6 mm)	0.06 oz (1.7 g)
JTH9E10	5/32"	9" (228.6 mm)	0.11 oz (3.1 g)
JTH9E11	3/16"	9" (228.6 mm)	0.14 oz (4.0 g)
JTH9E12	7/32"	9" (228.6 mm)	0.18 oz (5.1 g)
JTH9E13	1/4"	9" (228.6 mm)	0.27 oz (7.7 g)
JTH9E14	5/16"	9" (228.6 mm)	0.35 oz (9.9 g)
JTH9E15	3/8"	9" (228.6 mm)	0.45 oz (12.8 g)
JTH9E17	1/2"	9" (228.6 mm)	0.70 oz (19.8 g)

T-Handle Hex-Key Sets with Stand - SAE

Includes core Journeyman™ T-handle hex-key features plus:

- Metal stand for convenient mounting on bench or wall
- Short blade-through handle provides maximum tool versatility

JTH610E

Cat. No.	Set Contains			Weight
JTH410E	T-Handle Set with Stand, SAE, 4" Blade 10 Pc			2.7 lb (1.2 kg)
	Cat. No.	**Hex Size**	**Blade Length**	
	JTH4E06	3/32"	4" (101.6 mm)	
	JTH4E07	7/64"	4" (101.6 mm)	
	JTH4E08	1/8"	4" (101.6 mm)	
	JTH4E09	9/64"	4" (101.6 mm)	
	JTH4E10	5/32"	4" (101.6 mm)	
	JTH4E11	3/16"	4" (101.6 mm)	
	JTH4E12	7/32"	4" (101.6 mm)	
	JTH4E13	1/4"	4" (101.6 mm)	
	JTH4E14	5/16"	4" (101.6 mm)	
	JTH4E15	3/8"	4" (101.6 mm)	
Cat. No.	**Set Contains**			**Weight**
JTH610E	T-Handle Set with Stand, SAE, 6" Blade 10 Pc			2.7 lb (1.2 kg)
	Cat. No.	**Hex Size**	**Blade Length**	
	JTH6E06	3/32"	6" (152.4 mm)	
	JTH6E07	7/64"	6" (152.4 mm)	
	JTH6E08	1/8"	6" (152.4 mm)	
	JTH6E09	9/64"	6" (152.4 mm)	
	JTH6E10	5/32"	6" (152.4 mm)	
	JTH6E11	3/16"	6" (152.4 mm)	
	JTH6E12	7/32"	6" (152.4 mm)	
	JTH6E13	1/4"	6" (152.4 mm)	
	JTH6E14	5/16"	6" (152.4 mm)	
	JTH6E15	3/8"	6" (152.4 mm)	
Cat. No.	**Set Contains**			**Weight**
JTH910E	T-Handle Set with Stand, SAE, 9" Blade 10 Pc			3.6 lb (1.6 kg)
	Cat. No.	**Hex Size**	**Blade Length**	
	JTH9E06	3/32"	9" (228.6 mm)	
	JTH9E07	7/64"	9" (228.6 mm)	
	JTH9E08	1/8"	9" (228.6 mm)	
	JTH9E09	9/64"	9" (228.6 mm)	
	JTH9E10	5/32"	9" (228.6 mm)	
	JTH9E11	3/16"	9" (228.6 mm)	
	JTH9E12	7/32"	9" (228.6 mm)	
	JTH9E13	1/4"	9" (228.6 mm)	
	JTH9E14	5/16"	9" (228.6 mm)	
	JTH9E15	3/8"	9" (228.6 mm)	

See page 310 for additional information on warnings.

JOURNEYMAN™

T-Handle Hex-Keys

T-Handle Ball-End Hex-Keys - Metric

Includes core Journeyman™ T-handle hex-key features plus:

- Short blade-through handle provides maximum tool versatility

Cat. No.	Hex Size	Blade Length	Weight
JTH6M2BE	2 mm	6" (152.4 mm)	0.64 oz (18.1 g)
JTH6M25BE	2.5 mm	6" (152.4 mm)	0.80 oz (22.7 g)
JTH6M3BE	3 mm	6" (152.4 mm)	1.0 oz (28 g)
JTH6M4BE	4 mm	6" (152.4 mm)	1.1 oz (31 g)
JTH6M5BE	5 mm	6" (152.4 mm)	0.15 lb (0.07 kg)
JTH6M6BE	6 mm	6" (152.4 mm)	0.19 lb (0.09 kg)
JTH6M8BE	8 mm	6" (152.4 mm)	0.35 lb (0.16 kg)
JTH6M10BE	10 mm	6" (152.4 mm)	0.48 lb (0.22 kg)

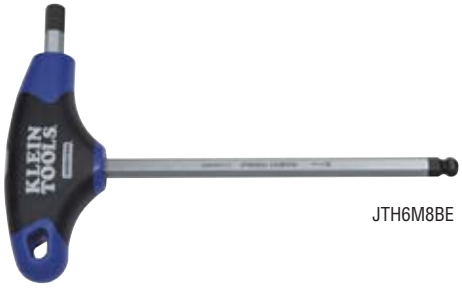

JTH6M8BE

T-Handle Ball-End Hex-Key Set with Stand - Metric

Includes core Journeyman™ T-handle hex-key features plus:

- Metal stand for convenient mounting on bench or wall
- Short blade-through handle provides maximum tool versatility

Cat. No.	Set Contains			Weight
JTH68MB				2.7 lb (1.2 kg)
	Cat. No.	**Hex Size**	**Blade Length**	
	JTH6M2BE	2 mm	6" (152.4 mm)	
	JTH6M25BE	2.5 mm	6" (152.4 mm)	
	JTH6M3BE	3 mm	6" (152.4 mm)	
	JTH6M4BE	4 mm	6" (152.4 mm)	
	JTH6M5BE	5 mm	6" (152.4 mm)	
	JTH6M6BE	6 mm	6" (152.4 mm)	
	JTH6M8BE	8 mm	6" (152.4 mm)	
	JTH6M10BE	10 mm	6" (152.4 mm)	

JTH68MB

T-Handle Hex-Keys - Metric

Includes core Journeyman™ T-handle hex-key features plus:

- Short blade-through handle provides maximum tool versatility

Cat. No.	Hex Size	Blade Length	Weight
JTH6M2	2 mm	6" (152.4 mm)	0.64 oz (18.1 g)
JTH6M25	2.5 mm	6" (152.4 mm)	0.80 oz (22.7 g)
JTH6M3	3 mm	6" (152.4 mm)	1.0 oz (28 g)
JTH6M4	4 mm	6" (152.4 mm)	0.10 oz (2.8 g)
JTH6M5	5 mm	6" (152.4 mm)	0.15 lb (0.07 kg)
JTH6M6	6 mm	6" (152.4 mm)	0.17 lb (0.08 kg)
JTH6M8	8 mm	6" (152.4 mm)	0.35 lb (0.16 kg)
JTH6M10	10 mm	6" (152.4 mm)	0.48 lb (0.22 kg)
JTH9M10	10 mm	9" (228.6 mm)	0.48 oz (13.6 g)
JTH9M2	2 mm	9" (228.6 mm)	0.05 oz (1.4 g)
JTH9M25	2.5 mm	9" (228.6 mm)	0.05 oz (1.4 g)
JTH9M3	3 mm	9" (228.6 mm)	0.06 oz (1.7 g)
JTH9M4	4 mm	9" (228.6 mm)	1.4 oz (40 g)
JTH9M5	5 mm	9" (228.6 mm)	0.18 oz (5.1 g)
JTH9M6	6 mm	9" (228.6 mm)	0.22 oz (6.2 g)
JTH9M8	8 mm	9" (228.6 mm)	0.42 oz (11.9 g)

JTH6M8

See page 310 for additional information on warnings.

JOURNEYMAN™

T-Handle Hex-Keys

T-Handle Hex-Key Sets with Stand - Metric

Includes core Journeyman™ T-handle hex-key features plus:

- Metal stand for convenient mounting on bench or wall
- Short blade-through handle provides maximum tool versatility

JTH68M

Cat. No.	Set Contains	Weight
JTH68M	6" Metric Journeyman T-Handle Set 8 Pc	1.8 lb (0.8 kg)

Cat. No.	Hex Size	Blade Length
JTH6M2	2 mm	6" (152.4 mm)
JTH6M25	2.5 mm	6" (152.4 mm)
JTH6M3	3 mm	6" (152.4 mm)
JTH6M4	4 mm	6" (152.4 mm)
JTH6M5	5 mm	6" (152.4 mm)
JTH6M6	6 mm	6" (152.4 mm)
JTH6M8	8 mm	6" (152.4 mm)
JTH6M10	10 mm	6" (152.4 mm)

Cat. No.	Set Contains	Weight
JTH98M	9" Metric Journeyman T-Handle Set 8 Pc	2.1 lb (1.0 kg)

Cat. No.	Hex Size	Blade Length
JTH9M2	2 mm	9" (228.6 mm)
JTH9M25	2.5 mm	9" (228.6 mm)
JTH9M3	3 mm	9" (228.6 mm)
JTH9M4	4 mm	9" (228.6 mm)
JTH9M5	5 mm	9" (228.6 mm)
JTH9M6	6 mm	9" (228.6 mm)
JTH9M8	8 mm	9" (228.6 mm)
JTH9M10	10 mm	9" (228.6 mm)

T-Handle Hex-Keys - TORX®

Includes core features plus:

- Short blade-through handle provides maximum tool versatility

Cat. No.	Hex Size	Blade Length	Weight
JTH6T10	T10	6" (152.4 mm)	0.80 oz (22.7 g)
JTH6T15	T15	6" (152.4 mm)	1.0 oz (28 g)
JTH6T20	T20	6" (152.4 mm)	1.1 oz (31 g)
JTH6T25	T25	6" (152.4 mm)	0.13 lb (0.06 kg)
JTH6T27	T27	6" (152.4 mm)	0.16 lb (0.07 kg)
JTH6T30	T30	6" (152.4 mm)	0.18 lb (0.08 kg)
JTH6T40	T40	6" (152.4 mm)	0.29 lb (0.13 kg)

TORX® is a trademark of Acument Intellectual Properties, LLC.

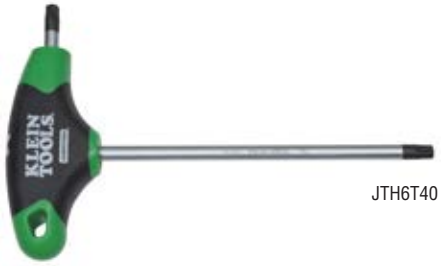

JTH6T40

T-Handle Hex-Key Set with Stand - TORX®

Includes core features plus:

- Metal stand for convenient mounting on bench or wall
- Short blade-through handle provides maximum tool versatility

Cat. No.	Set Contains	Weight
JTH67T	6" Torx® T-Handle Set with Stand 7 Pc	1.3 lb (0.6 kg)

Cat. No.	Hex Size	Blade Length
JTH6T10	T10	6" (152.4 mm)
JTH6T15	T15	6" (152.4 mm)
JTH6T20	T20	6" (152.4 mm)
JTH6T25	T25	6" (152.4 mm)
JTH6T27	T27	6" (152.4 mm)
JTH6T30	T30	6" (152.4 mm)
JTH6T40	T40	6" (152.4 mm)

TORX® is a trademark of Acument Intellectual Properties, LLC.

JTH67T

See page 310 for additional information on warnings.

Folding Hex-Key Sets

Hex-Key Sets

- Two key positions (straight-out or right angle) for extra leverage
- Hex ends are square-cut for a secure full-depth fit and maximum contact with the hex socket to prevent slippage and stripping of the socket
- Handy sets fit in your pocket or tool box easily and help eliminate the lost key problem
- Made in the U.S.A.

Improved Strength

70579

Cat. No.	Description	Size	Handle Length	Key Lengths	Color	Weight
70591	Nine-Key Inch Folding Hex Key Set	5/64", 3/32", 7/64", 1/8", 9/64", 5/32", 3/16", 7/32", 1/4"	4-3/8" (111.1 mm)	2-11/16" to 3-13/16" (68.3 to 96.8 mm)	Silver	0.50 lb (0.23 kg)
70581	Eight-Key Inch Folding Hex Key Set	1/20", 1/16", 5/64", 3/32", 7/64", 1/8", 9/64", 5/32"	3-1/16" (77.8 mm)	1-7/8" to 3" (47.6 to 76.2 mm)	Silver	0.20 lb (0.09 kg)
70579	Five-Key Inch Folding Hex Key Set	3/16", 7/32", 1/4", 5/16", 3/8"	5-3/8" (136.5 mm)	2-11/16" to 3-13/16" (68.3 to 96.8 mm)	Silver	0.85 lb (0.39 kg)
70582	Seven-Key Metric Folding Hex Key Set	1-1/2 mm, 2 mm, 2-1/2 mm, 3 mm, 4 mm, 5 mm, 6 mm	3-45/64" (94 mm)	19/32" to 1-25/32" (15 to 45 mm)	Silver	0.27 lb (0.12 kg)
70580	Six-Key Metric Folding Hex Key Set	3 mm, 4 mm, 5 mm, 6 mm, 8 mm, 10 mm	5-3/8" (136.5 mm)	2-3/8" to 4" (60 to 101 mm)	Silver	0.85 lb (0.39 kg)

Grip-It™ Hex-Key Sets

- Blades rotate independently up to 270°
- Precision fit so hex tool end reduces stripping problems. Keys are industrial strength, impact-resistant and tested for performance to below freezing
- Glass-reinforced nylon handle
- Hex ends are square-cut for a secure full-depth fit and maximum contact with the hex socket to prevent slippage and stripping of the socket (Cat. Nos. 70570, 70573, 70574, and 70575)
- Ball design allows for a thicker neck diameter increasing torque capacity, while maintaining operational angles to 25% (Cat. Nos. 70571 and 70572)
- Made in the U.S.A.

70570

Cat. No.	Description	Size	Handle Length	Key Lengths	Color	Weight
70570	Grip-It® Five Key Hex Set - Inch	3/16", 7/32", 1/4", 5/16", 3/8"	4-7/16" (112.7 mm)	1-37/64" to 1-31/32" (40.1 to 50.0 mm)	Yellow	0.58 lb (0.26 kg)
70571	Grip-It® Five Key Ball Hex Set - Inch	3/16", 7/32", 1/4", 5/16", 3/8"	4-7/16" (112.7 mm)	1-35/64" to2" (39.3 mm to 50.8 mm)	Yellow	0.58 lb (0.26 kg)
70572	Grip-It® Five Key Ball Hex Set - Metric	5 mm, 6 mm, 7 mm, 8 mm, 10 mm	4-7/16" (112.7 mm)	1-19/32" to 1-15/16" (40.5 to 49.2 mm)	Red	0.58 lb (0.26 kg)
70573	Grip-It® 12 Key Hex Set - Inch/Metric	5/64", 3/32", 7/64", 1/8", 9/64", 5/32", 1.5 mm, 2 mm, 2.5 mm, 3 mm, 4 mm, 5 mm	4-7/16" (112.7 mm)	1-7/16" to 2-17/64" (36.5 to 57.6 mm)	Blue	0.30 lb (0.14 kg)
70574	Grip-It® Nine Key Hex Set 2 Positions	5/64", 3/32", 7/64", 1/8", 9/64", 5/32", 3/16", 7/32", 1/4"	4-7/16" (112.7 mm)	1-3/4" to 2-17/64" (44.5 to 57.6 mm)	Yellow	0.33 lb (0.15 kg)
70575	Grip-It® Nine Key Hex Set Square Cut	3/64", 1/16", 5/64", 3/32", 7/64", 1/8", 9/64", 5/32", 3/16"	3-13/16" (96.8 mm)	1-25/64" to 1-27/32" (35.3 to 46.8 mm)	Yellow	0.20 lb (0.09 kg)

TORX® Sets

Folding TORX® Set

- TORX® drive cuts slippage, saves fasteners, efficiently transmits more torque to the work
- Keys are tough, heat-treated chrome-nickel alloy steel for strength and durability
- Keys fold flat into handle
- Can be used straight out or at an angle for extra leverage

70586

Cat. No.	Size	Handle Length	Key Lengths	Color	Weight
70586	T10, T15, T20, T25, T27, T30, T40	4-3/8" (111.1 mm)	2-13/16" to 3" (71.4 to 76.2 mm)	Silver	0.30 lb (0.14 kg)

TORX® is a trademark of Acument Intellectual Properties, LLC.

L-Style Hex-Keys

Rust and corrosion resistant surfaces

Top-grade alloy steel

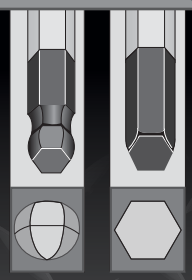

Extra length for hard-to-reach applications

Heat-treated and tempered for added strength and durability

Short length for higher torque situations and low clearances

MADE IN USA

LL8

L-Style Hex-Keys

Includes core L-Style hex key features plus:

- Allows easy access, even in restricted areas

Cat. No.	Hex Size	Short Arm Length	Long Arm Length	Weight
LL2	0.050"	9/16" (14.28 mm)	2-7/8" (73.0 mm)	0.08 oz (2.3 g)
LL4	1/16"	5/8" (15.87 mm)	3-1/16" (77.8 mm)	0.08 oz (2.3 g)
LL5	5/64"	11/16" (17.46 mm)	3-1/4" (82.6 mm)	0.08 oz (2.3 g)
LL6	3/32"	3/4" (19.05 mm)	3-1/2" (88.9 mm)	0.16 oz (4.5 g)
LL7	7/64"	13/16" (20.63 mm)	3-11/16" (93.7 mm)	0.32 oz (9.1 g)
LL8	1/8"	7/8" (22.22 mm)	3-7/8" (98.4 mm)	0.32 oz (9.1 g)
LL9	9/64"	15/16" (23.81 mm)	4-1/8" (104.8 mm)	0.48 oz (13.6 g)
LL10	5/32"	1" (25.4 mm)	4-3/8" (111.1 mm)	0.48 oz (13.6 g)
LL12	3/16"	1-1/8" (28.57 mm)	4-11/16" (119.1 mm)	0.80 oz (22.7 g)
LL14	7/32"	1-1/4" (31.75 mm)	5-1/16" (128.6 mm)	0.70 lb (0.32 kg)
LL16	1/4"	1-3/8" (34.92 mm)	5-1/2" (139.7 mm)	0.10 lb (0.05 kg)
LL20	5/16"	1-9/16" (39.68 mm)	6-5/16" (160.33 mm)	0.18 lb (0.08 kg)
LL24	3/8"	1-3/4" (44.45 mm)	7-1/8" (181.0 mm)	0.25 lb (0.11 kg)
Metric				
LLM15	1.5 mm	9/16" (14.28 mm)	3-1/8" (79.4 mm)	0.08 oz (2.3 g)
LLM2	2 mm	11/16" (17.46 mm)	3-1/32" (77.0 mm)	0.08 oz (2.3 g)
LLM25	2.5 mm	13/16" (20.63 mm)	3-9/16" (90.5 mm)	0.16 oz (4.5 g)
LLM3	3 mm	7/8" (22.22 mm)	4" (101.6 mm)	0.32 oz (9.1 g)
LLM4	4 mm	1" (25.4 mm)	4-1/2" (114.3 mm)	0.48 oz (13.6 g)
LLM5	5 mm	1-1/4" (31.75 mm)	4-7/8" (123.8 mm)	0.80 oz (22.7 g)
LLM6	6 mm	1-7/16" (36.51 mm)	5-11/16" (144.5 mm)	1.3 oz (37 g)
LLM8	8 mm	1-11/16" (42.86 mm)	6-5/16" (160.33 mm)	0.15 lb (0.07 kg)
LLM10	10 mm	1-15/16" (49.21 mm)	7-1/8" (181.0 mm)	0.25 lb (0.11 kg)

BL8

L-Style Ball-End Hex-Keys

Includes core L-Style hex key features plus:

- Allows easy access, even in restricted areas
- Ball-end works on angles up to 30°

Cat. No.	Hex Size	Short Arm Length	Long Arm Length	Weight
BL2	0.050"	9/16" (14.28 mm)	2-7/8" (73.0 mm)	0.03 oz (0.9 g)
BL4	1/16"	5/8" (15.87 mm)	3-1/16" (77.8 mm)	0.03 oz (0.9 g)
BL5	5/64"	11/16" (17.46 mm)	3-1/4" (82.6 mm)	0.08 oz (2.3 g)
BL6	3/32"	3/4" (19.05 mm)	3-1/2" (88.9 mm)	0.08 oz (2.3 g)
BL7	7/64"	3/4" (19.05 mm)	3-11/16" (93.7 mm)	0.16 oz (4.5 g)
BL8	1/8"	7/8" (22.22 mm)	3-7/8" (98.4 mm)	0.32 oz (9.1 g)
BL9	9/64"	15/16" (23.81 mm)	4-1/8" (104.8 mm)	0.32 oz (9.1 g)
BL10	5/32"	1" (25.4 mm)	4-3/8" (111.1 mm)	0.48 oz (13.6 g)
BL12	3/16"	1-1/8" (28.57 mm)	4-11/16" (119.1 mm)	0.80 oz (22.7 g)
BL14	7/32"	1-1/4" (31.75 mm)	5-1/16" (128.6 mm)	1.0 oz (28 g)
BL16	1/4"	1-3/8" (34.92 mm)	5-13/16" (147.6 mm)	1.4 oz (40 g)
BL20	5/16"	1-9/16" (39.68 mm)	6-5/16" (160.33 mm)	0.17 lb (0.08 kg)
BL24	3/8"	1-3/4" (44.45 mm)	7-1/8" (181.0 mm)	0.23 lb (0.10 kg)
Metric				
BLM15	1.5 mm	9/16" (14.28 mm)	3-1/16" (77.8 mm)	0.16 oz (4.5 g)
BLM2	2 mm	11/16" (17.46 mm)	3-5/16" (84.1 mm)	0.16 oz (4.5 g)
BLM25	2.5 mm	13/16" (20.63 mm)	3-9/16" (90.5 mm)	0.16 oz (4.5 g)
BLM3	3 mm	7/8" (22.22 mm)	4" (101.6 mm)	0.32 oz (9.1 g)
BLM4	4 mm	1" (25.4 mm)	4-1/2" (114.3 mm)	0.48 oz (13.6 g)
BLM5	5 mm	1-1/4" (31.75 mm)	4-7/8" (123.8 mm)	0.80 oz (22.7 g)
BLM6	6 mm	1-7/16" (36.51 mm)	5-11/16" (144.5 mm)	1.3 oz (37 g)
BLM8	8 mm	1-11/16" (42.86 mm)	6-5/16" (160.33 mm)	0.14 lb (0.06 kg)
BLM10	10 mm	1-15/16" (49.21 mm)	6-1/8" (155.6 mm)	0.24 lb (0.11 kg)

See page 310 for additional information on warnings.

L-Style Hex-Key Sets

L-Style Caddy Sets

Includes core L-Style hex key features plus:

- L-style hex-keys organized in convenient, durable caddy sets
- Each set contains a unique locking feature and marked slots for each key
- Ball-end works on angles up to 30° (Cat. Nos. BLK12 and BLMK10)

BLK12

LMK10

Cat. No.	Set Contains	Weight
BLK12	L Style Ball End Hex Key Caddy Set 12 Pc	0.53 lb (0.24 kg)

Cat. No.	Hex Size	Short Arm Length	Long Arm Length
BL2	0.050"	9/16" (14.28 mm)	2-7/8" (73.0 mm)
BL4	1/16"	5/8" (15.87 mm)	3-1/16" (77.8 mm)
BL5	5/64"	11/16" (17.46 mm)	3-1/4" (82.6 mm)
BL6	3/32"	3/4" (19.05 mm)	3-1/2" (88.9 mm)
BL7	7/64"	3/4" (19.05 mm)	3-11/16" (93.7 mm)
BL8	1/8"	7/8" (22.22 mm)	3-7/8" (98.4 mm)
BL9	9/64"	15/16" (23.81 mm)	4-1/8" (104.8 mm)
BL10	5/32"	1" (25.4 mm)	4-3/8" (111.1 mm)
BL12	3/16"	1-1/8" (28.57 mm)	4-11/16" (119.1 mm)
BL14	7/32"	1-1/4" (31.75 mm)	5-1/16" (128.6 mm)
BL16	1/4"	1-3/8" (34.92 mm)	5-13/16" (147.6 mm)
BL20	5/16"	1-9/16" (39.68 mm)	6-5/16" (160.33 mm)

Cat. No.	Set Contains	Weight
BLMK10	L Style Ball End Hex Key Caddy Set Metric 9 Pc	0.62 lb (0.28 kg)

Cat. No.	Hex Size	Short Arm Length	Long Arm Length
BLM15	1.5 mm	9/16" (14.28 mm)	3-1/16" (77.8 mm)
BLM2	2 mm	11/16" (17.46 mm)	3-5/16" (84.1 mm)
BLM25	2.5 mm	13/16" (20.63 mm)	3-9/16" (90.5 mm)
BLM3	3 mm	7/8" (22.22 mm)	4" (101.6 mm)
BLM4	4 mm	1" (25.4 mm)	4-1/2" (114.3 mm)
BLM5	5 mm	1-1/4" (31.75 mm)	4-7/8" (123.8 mm)
BLM6	6 mm	1-7/16" (36.51 mm)	5-11/16" (144.5 mm)
BLM8	8 mm	1-11/16" (42.86 mm)	6-5/16" (160.33 mm)
BLM10	10 mm	1-15/16" (49.21 mm)	6-1/8" (155.6 mm)

Cat. No.	Set Contains	Weight
LLK12	L-Style Hex Key Caddy Set 12 Pc	0.54 lb (0.24 kg)

Cat. No.	Hex Size	Short Arm Length	Long Arm Length
LL2	0.050"	9/16" (14.28 mm)	2-7/8" (73.0 mm)
LL4	1/16"	5/8" (15.87 mm)	3-1/16" (77.8 mm)
LL5	5/64"	11/16" (17.46 mm)	3-1/4" (82.6 mm)
LL6	3/32"	3/4" (19.05 mm)	3-1/2" (88.9 mm)
LL7	7/64"	13/16" (20.63 mm)	3-11/16" (93.7 mm)
LL8	1/8"	7/8" (22.22 mm)	3-7/8" (98.4 mm)
LL9	9/64"	15/16" (23.81 mm)	4-1/8" (104.8 mm)
LL10	5/32"	1" (25.4 mm)	4-3/8" (111.1 mm)
LL12	3/16"	1-1/8" (28.57 mm)	4-11/16" (119.1 mm)
LL14	7/32"	1-1/4" (31.75 mm)	5-1/16" (128.6 mm)
LL16	1/4"	1-3/8" (34.92 mm)	5-1/2" (139.7 mm)
LL20	5/16"	1-9/16" (39.68 mm)	6-5/16" (160.33 mm)

Cat. No.	Set Contains	Weight
LMK10	L-Style Hex Key Caddy Set Metric 9 Pc	0.63 lb (0.29 kg)

Cat. No.	Hex Size	Short Arm Length	Long Arm Length
LLM15	1.5 mm	9/16" (14.28 mm)	3-1/8" (79.4 mm)
LLM2	2 mm	11/16" (17.46 mm)	3-1/32" (77.0 mm)
LLM25	2.5 mm	13/16" (20.63 mm)	3-9/16" (90.5 mm)
LLM3	3 mm	7/8" (22.22 mm)	4" (101.6 mm)
LLM4	4 mm	1" (25.4 mm)	4-1/2" (114.3 mm)
LLM5	5 mm	1-1/4" (31.75 mm)	4-7/8" (123.8 mm)
LLM6	6 mm	1-7/16" (36.51 mm)	5-11/16" (144.5 mm)
LLM8	8 mm	1-11/16" (42.86 mm)	6-5/16" (160.33 mm)
LLM10	10 mm	1-15/16" (49.21 mm)	7-1/8" (181.0 mm)