Conduit Bodies and Covers for General Service Locations

Description:

Plasti-Bond REDH$_2$OT conduit bodies with covers are offered in Form 8 and Form 7 styles, each with numerous configurations to provide a complete coated conduit system. May be used to make 90˚ bends, for pull outlets, to provide for taps or splices, to act as a mounting outlet for wiring devices or lighting fixtures, etc. Form 8 style fittings 1/2" – 4" have an integral V-Seal gasket for superior corrosion protection. Electrical continuity of the conduit system is maintained across assembled joints.

Features:

- 40 mil gray PVC exterior coating
- 2 mil red urethane interior coating
- 10 trade sizes from 1/2" through 4"
- Sealing sleeves on all conduit openings
- Form 7 style cover uses retained stainless screw and wedge clip design
- Form 8 style cover uses plastic encapsulated stainless steel screws with retainers built into covers for trade sizes 1/2" through 2"
- Integral V-Seal gasket on Form 8 style, sizes 1/2" through 4"

Standards:

Steel and Aluminum

- UL 514A, 514D (E231035)
- CSA C22.2 No. 18, CSA C22.2 No. 42

Form 8 & Mark 9 Fittings – ½" – 4"

- IEC IP69
- UL Type 4X

Note: Form 7 fittings are not available with encapsulated screws.
All cover screws are stainless steel.

1100 US Highway 271 South
Gilmer, Texas 75644

Phone: 903.843.5591
Fax: 903.843.5595

Conduit Bodies Technical Data

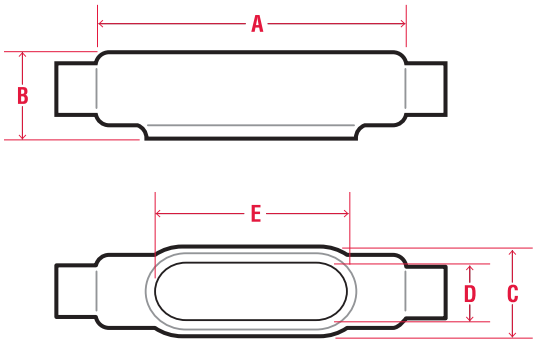

C FORM 8

PIPE SIZE	FERROUS CATALOG #	NOMINAL WEIGHT	A	B	C	D	E
1/2"	PRHC18	2.0	5.69	1.48	1.46	1.00	3.31
3/4"	PRHC28	2.3	6.28	1.73	1.27	1.19	3.94
1"	PRHC38	2.8	7.31	1.98	1.83	1.38	4.56
1-1/4"	PRHC448	4.5	8.50	2.42	2.27	1.75	5.31
1-1/2"	PRHC58	6.5	10.38	2.82	2.83	2.13	6.50
2"	PRHC68	10.3	12.25	3.60	3.83	3.00	8.56
2-1/2"	PRC78	18.0	15.63	4.48	5.08	4.25	10.88
3"	PRC88	20.5	15.63	4.85	5.08	4.25	10.88

C FORM 7

PIPE SIZE	FERROUS CATALOG #	NOMINAL WEIGHT	A	B	C	D	E	ALUMINUM CATALOG #
1/2"	PRC17	1.0	5.38	1.42	1.46	0.94	3.19	PRC17SA
3/4"	PRC27	1.4	6.00	1.67	1.64	1.13	3.81	PRC27SA
1"	PRC37	2.2	7.00	1.92	1.83	1.38	4.50	PRC37SA
1-1/4"	PRC47	2.7	7.44	2.35	2.27	1.75	5.00	PRC47SA
1-1/2"	PRC57	4.0	8.19	2.60	2.52	1.94	5.44	PRC57SA
2"	PRC67	5.5	9.19	3.17	3.08	2.44	6.38	PRC67SA
2-1/2"	PRC77	10.0	12.00	3.67	4.33	3.56	8.38	PRC77SA
3"	PRC87	11.8	11.75	4.42	4.33	3.56	8.38	PRC87SA

C MARK 9

PIPE SIZE	NOMINAL WEIGHT	A	B	C	D	E	ALUMINUM CATALOG #
1/2"	2.0	5.00	1.42	1.46	1.19	3.31	PRC19
3/4"	2.3	5.69	1.67	1.64	1.38	3.94	PRC29
1"	2.8	6.59	1.92	1.83	1.50	4.56	PRC39
1-1/4"	4.5	7.50	2.54	2.27	1.94	5.31	PRC49
1-1/2"	6.5	8.25	2.79	2.58	2.25	6.00	PRC59
2"	10.3	10.50	3.48	3.27	2.88	8.06	PRC69
2-1/2"	18.0	15.63	4.48	5.08	4.25	10.88	PRC789
3"	20.5	15.63	4.85	5.08	4.25	10.88	PRC889
3-1/2"	10.0	18.75	5.73	6.33	5.44	13.44	PRC989
4"	12.0	18.75	5.98	6.33	5.44	13.44	PRC1089

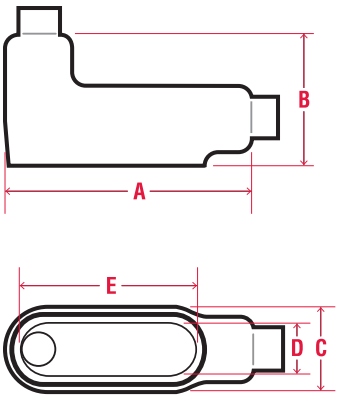

LB FORM 8

PIPE SIZE	FERROUS CATALOG #	NOMINAL WEIGHT	A	B	C	D	E
1/2"	PRHLB18	1.5	4.98	2.22	1.46	1.00	3.31
3/4"	PRHLB28	2.0	5.60	2.44	1.64	1.19	3.94
1"	PRHLB38	2.9	6.51	2.81	1.83	1.38	4.56
1-1/4"	PRHLB448	4.1	7.57	3.34	2.27	1.75	5.31
1-1/2"	PRHLB58	6.5	9.17	4.03	2.83	2.13	6.50
2"	PRHLB68	8.2	11.04	4.81	3.83	3.00	8.56
2-1/2"	PRLB78	18.2	13.98	6.13	5.08	4.25	10.88
3"	PRLB888	21.2	13.98	6.50	5.08	4.25	10.88
3-1/2"	PRLB98	31.2	16.92	7.56	6.33	5.44	13.44
4"	PRLB108	32.0	16.92	7.81	6.33	5.44	13.44

LB FORM 7

PIPE SIZE	FERROUS CATALOG #	NOMINAL WEIGHT	A	B	C	D	E	ALUMINUM CATALOG #
1/2"	PRLB17	1.1	4.60	2.25	1.46	0.94	3.19	PRLB17SA
3/4"	PRLB27	1.7	5.24	2.50	1.64	1.13	3.81	PRLB27SA
1"	PRLB37	2.2	6.04	2.88	1.83	1.38	4.50	PRLB37SA
1-1/4"	PRLB47	3.1	6.54	3.31	2.27	1.75	5.00	PRLB47SA
1-1/2"	PRLB57	3.8	7.17	3.69	2.52	1.94	5.44	PRLB57SA
2"	PRLB67	5.2	8.17	4.25	3.08	2.44	6.38	PRLB67SA
2-1/2"	PRLB777	10.0	10.54	5.13	4.33	3.56	8.38	PRLB777SA
3"	PRLB87	13.0	10.54	5.88	4.33	3.56	8.38	PRLB87SA
3-1/2"	PRLB97	19.0	12.73	6.56	5.33	4.50	10.25	PRLB97SA
4"	PRLB107	18.5	12.73	7.06	5.33	4.50	10.25	PRLB107SA

LB MARK 9

PIPE SIZE	NOMINAL WEIGHT	A	B	C	D	E	ALUMINUM CATALOG #
1/2"	1.5	4.63	2.13	1.46	1.19	3.31	PRLB19
3/4"	2.0	5.29	2.41	1.64	1.38	3.94	PRLB29
1"	2.9	6.13	2.84	1.83	1.50	4.56	PRLB39
1-1/4"	4.1	7.07	3.47	2.27	1.94	5.31	PRLB49
1-1/2"	6.5	7.79	3.75	2.58	2.25	6.00	PRLB59
2"	8.2	10.07	4.47	3.27	2.88	8.06	PRLB69
2-1/2"	18.2	13.98	6.13	5.08	4.25	10.88	PRLB789
3"	21.2	13.98	6.50	5.08	4.25	10.88	PRLB889
3-1/2"	31.2	16.92	7.56	6.33	5.44	13.44	PRLB989
4"	32.0	16.92	7.81	6.33	5.44	13.44	PRLB1089

Conduit Bodies and Covers for General Service Locations

Description:

Plasti-Bond REDH$_2$OT conduit bodies with covers are offered in Form 8 and Form 7 styles, each with numerous configurations to provide a complete coated conduit system. May be used to make 90˚ bends, for pull outlets, to provide for taps or splices, to act as a mounting outlet for wiring devices or lighting fixtures, etc. Form 8 style fittings 1/2" – 4" have an integral V-Seal gasket for superior corrosion protection. Electrical continuity of the conduit system is maintained across assembled joints.

Features:

- 40 mil gray PVC exterior coating
- 2 mil red urethane interior coating
- 10 trade sizes from 1/2" through 4"
- Sealing sleeves on all conduit openings
- Form 7 style cover uses retained stainless screw and wedge clip design
- Form 8 style cover uses plastic encapsulated stainless steel screws with retainers built into covers for trade sizes 1/2" through 2"
- Integral V-Seal gasket on Form 8 style, sizes 1/2" through 4"

Standards:

Steel and Aluminum

- UL 514A, 514D (E231035)
- CSA C22.2 No. 18, CSA C22.2 No. 42

Form 8 & Mark 9 Fittings – ½" – 4"

- IEC IP69
- UL Type 4X

Note: Form 7 fittings are not available with encapsulated screws.
All cover screws are stainless steel.

1100 US Highway 271 South
Gilmer, Texas 75644

Phone: 903.843.5591
Fax: 903.843.5595

Conduit Bodies Technical Data

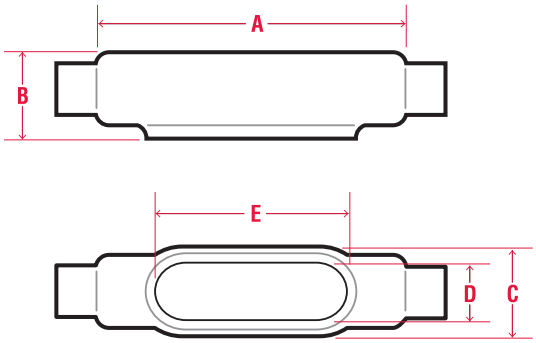

C FORM 8

PIPE SIZE	FERROUS CATALOG #	NOMINAL WEIGHT	A	B	C	D	E
1/2"	PRHC18	2.0	5.69	1.48	1.46	1.00	3.31
3/4"	PRHC28	2.3	6.28	1.73	1.27	1.19	3.94
1"	PRHC38	2.8	7.31	1.98	1.83	1.38	4.56
1-1/4"	PRHC448	4.5	8.50	2.42	2.27	1.75	5.31
1-1/2"	PRHC58	6.5	10.38	2.82	2.83	2.13	6.50
2"	PRHC68	10.3	12.25	3.60	3.83	3.00	8.56
2-1/2"	PRC78	18.0	15.63	4.48	5.08	4.25	10.88
3"	PRC88	20.5	15.63	4.85	5.08	4.25	10.88

C FORM 7

PIPE SIZE	FERROUS CATALOG #	NOMINAL WEIGHT	A	B	C	D	E	ALUMINUM CATALOG #
1/2"	PRC17	1.0	5.38	1.42	1.46	0.94	3.19	PRC17SA
3/4"	PRC27	1.4	6.00	1.67	1.64	1.13	3.81	PRC27SA
1"	PRC37	2.2	7.00	1.92	1.83	1.38	4.50	PRC37SA
1-1/4"	PRC47	2.7	7.44	2.35	2.27	1.75	5.00	PRC47SA
1-1/2"	PRC57	4.0	8.19	2.60	2.52	1.94	5.44	PRC57SA
2"	PRC67	5.5	9.19	3.17	3.08	2.44	6.38	PRC67SA
2-1/2"	PRC77	10.0	12.00	3.67	4.33	3.56	8.38	PRC77SA
3"	PRC87	11.8	11.75	4.42	4.33	3.56	8.38	PRC87SA

C MARK 9

PIPE SIZE	NOMINAL WEIGHT	A	B	C	D	E	ALUMINUM CATALOG #
1/2"	2.0	5.00	1.42	1.46	1.19	3.31	PRC19
3/4"	2.3	5.69	1.67	1.64	1.38	3.94	PRC29
1"	2.8	6.59	1.92	1.83	1.50	4.56	PRC39
1-1/4"	4.5	7.50	2.54	2.27	1.94	5.31	PRC49
1-1/2"	6.5	8.25	2.79	2.58	2.25	6.00	PRC59
2"	10.3	10.50	3.48	3.27	2.88	8.06	PRC69
2-1/2"	18.0	15.63	4.48	5.08	4.25	10.88	PRC789
3"	20.5	15.63	4.85	5.08	4.25	10.88	PRC889
3-1/2"	10.0	18.75	5.73	6.33	5.44	13.44	PRC989
4"	12.0	18.75	5.98	6.33	5.44	13.44	PRC1089

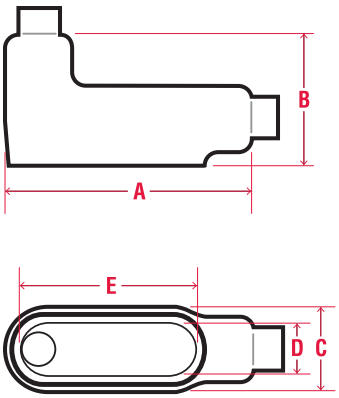

LB FORM 8

PIPE SIZE	FERROUS CATALOG #	NOMINAL WEIGHT	A	B	C	D	E
1/2"	PRHLB18	1.5	4.98	2.22	1.46	1.00	3.31
3/4"	PRHLB28	2.0	5.60	2.44	1.64	1.19	3.94
1"	PRHLB38	2.9	6.51	2.81	1.83	1.38	4.56
1-1/4"	PRHLB448	4.1	7.57	3.34	2.27	1.75	5.31
1-1/2"	PRHLB58	6.5	9.17	4.03	2.83	2.13	6.50
2"	PRHLB68	8.2	11.04	4.81	3.83	3.00	8.56
2-1/2"	PRLB78	18.2	13.98	6.13	5.08	4.25	10.88
3"	PRLB888	21.2	13.98	6.50	5.08	4.25	10.88
3-1/2"	PRLB98	31.2	16.92	7.56	6.33	5.44	13.44
4"	PRLB108	32.0	16.92	7.81	6.33	5.44	13.44

LB FORM 7

PIPE SIZE	FERROUS CATALOG #	NOMINAL WEIGHT	A	B	C	D	E	ALUMINUM CATALOG #
1/2"	PRLB17	1.1	4.60	2.25	1.46	0.94	3.19	PRLB17SA
3/4"	PRLB27	1.7	5.24	2.50	1.64	1.13	3.81	PRLB27SA
1"	PRLB37	2.2	6.04	2.88	1.83	1.38	4.50	PRLB37SA
1-1/4"	PRLB47	3.1	6.54	3.31	2.27	1.75	5.00	PRLB47SA
1-1/2"	PRLB57	3.8	7.17	3.69	2.52	1.94	5.44	PRLB57SA
2"	PRLB67	5.2	8.17	4.25	3.08	2.44	6.38	PRLB67SA
2-1/2"	PRLB777	10.0	10.54	5.13	4.33	3.56	8.38	PRLB777SA
3"	PRLB87	13.0	10.54	5.88	4.33	3.56	8.38	PRLB87SA
3-1/2"	PRLB97	19.0	12.73	6.56	5.33	4.50	10.25	PRLB97SA
4"	PRLB107	18.5	12.73	7.06	5.33	4.50	10.25	PRLB107SA

LB MARK 9

PIPE SIZE	NOMINAL WEIGHT	A	B	C	D	E	ALUMINUM CATALOG #
1/2"	1.5	4.63	2.13	1.46	1.19	3.31	PRLB19
3/4"	2.0	5.29	2.41	1.64	1.38	3.94	PRLB29
1"	2.9	6.13	2.84	1.83	1.50	4.56	PRLB39
1-1/4"	4.1	7.07	3.47	2.27	1.94	5.31	PRLB49
1-1/2"	6.5	7.79	3.75	2.58	2.25	6.00	PRLB59
2"	8.2	10.07	4.47	3.27	2.88	8.06	PRLB69
2-1/2"	18.2	13.98	6.13	5.08	4.25	10.88	PRLB789
3"	21.2	13.98	6.50	5.08	4.25	10.88	PRLB889
3-1/2"	31.2	16.92	7.56	6.33	5.44	13.44	PRLB989
4"	32.0	16.92	7.81	6.33	5.44	13.44	PRLB1089