FM7™ Unilet® Conduit Outlet Bodies

For use with Rigid Steel, Rigid Aluminum and IMC Conduit.

Applications

- Serve as pulling fittings.
- Make bends in conduit system.
- Provide openings for splicing.
- Connect and change direction of conduit runs.
- Allow connections for branch runs.
- Permit access to conductors for maintenance.

Features

- Smooth, rounded integral bushings in hubs protect conductor insulation.
- Accurately tapped, tapered threads for tight, rigid joints and excellent ground continuity.
- Wedge-Lok™ Form-IN-Place covers with integral gasket are approved for use in wet locations. Grayloy-iron bodies with cast covers and gasket are approved for use in wet locations.
- Unique Wedge-Lok™ clip cover design allows easy removal at any later time, without damaging the conduit body. The cover is secured with clips, not screws.
- Completely interchangeable with Crouse-Hinds ✣ Form 7™ ✣ bodies, gaskets and covers. Equivalent FM7 and Form 7™ units have identical applications and installation dimensions.
- Flat back design provides greater cubic content for easier wire pulling, and more room for splicing. Fits flush and snug against flat surfaces for more stable installation.
- Smooth hub bushings and cover openings protect conductor insulation. Smooth hub openings allow easy conduit joining.
- Pan-head cover screws secure cover clips and provide superior screwdriver seating and torque. Cover screws and clips are captive to prevent loss.
- Hub size, body style, compliance data, maximum wire number/ size and cubic capacity molded into body.

Standard Materials

- Body: Grayloy-iron or copperfree (4/10 of 1% max.) aluminum
- Covers: Grayloy-iron, copperfree (4/10 of 1% max.) aluminum or steel
- Cover screws: stainless steel

Standard Finishes

- Grayloy-iron bodies and covers: triplecoat — (1) zinc electroplate, (2) chromate, and (3) epoxy powder coat
- Cast aluminum bodies and covers: epoxy powder coat
- Steel covers: zinc electroplate
- Stamped aluminum covers: natural finish

Certifications and Compliances

- UL Standard: 514A , 514B
- UL Listed: E2527
- CSA Standard: C22.2 No. 18.3
- CSA Certified: 065183
- NEMA Standard: FB-1

Options

- PVC coating available on select aluminum bodies and covers. Add suffix **-PVC** to catalog number.

Type LB

Illustrated Features

Conduit Body with Cast Aluminum Cover, 1" Type C shown

Grayloy™–Iron, 1" Type C shown with cut–away body and cover to illustrate Wedge–Lok™ Clip Cover detail

Illustrated views are cut away to demonstrate back configurations.

Appleton FM7 (C57, 1–1/2")
28 Cubic Inches Capacity
Flat–Back Design

Crouse–Hinds Form 7 (C57, 1–1/2")
26 Cubic Inches Capacity

✣ *Crouse-Hinds and Form 7 are registered trademarks of Cooper Crouse-Hinds.*

© September 2010

FM7™ Unilet® Conduit Bodies

For use with Rigid Steel, Rigid Aluminum and IMC Conduit.

Appleton FM7 Conduit Bodies *

Hub Size (inches)	C		LB		LL		LR		T	
	Grayloy–Iron	Aluminum ‡	Grayloy–Iron	Aluminum ‡	Grayloy–Iron	Aluminum ‡	Grayloy–Iron	Aluminum ‡	Grayloy–Iron	Aluminum ‡
1/2	C17	C17-SA	LB17	LB17-SA	LL17	LL17-SA	LR17	LR17-SA	T17	T17-SA
3/4	C27	C27-SA	LB27	LB27-SA	LL27	LL27-SA	LR27	LR27-SA	T27	T27-SA
1	C37	C37-SA	LB37	LB37-SA	LL37	LL37-SA	LR37	LR37-SA	T37	T37-SA
1-1/4	C47	C47-SA	LB47	LB47-SA	LL47	LL47-SA	LR47	LR47-SA	T47	T47-SA
1-1/2	C57	C57-SA	LB57	LB57-SA	LL57	LL57-SA	LR57	LR57-SA	T57	T57-SA
2	C67	C67-SA	LB67	LB67-SA	LL67	LL67SA	LR67	LR67-SA	T67	T67-SA
2-1/2	C77	C77-SA	LB77	LB77-SA	LL77	LL77-SA	LR77	LR77-SA	T77	T77-SA
3	C87	C87-SA	LB87	LB87-SA	LL87	LL87-SA	LR87	LR87-SA	T87	T87-SA
3-1/2	—	—	LB97	LB97-SA	LL97	LL97-SA	LR97	LR97-SA	T97	T97-SA
4	—	—	LB107	LB107-SA	LL107	LL107-SA	LR107	LR107-SA	T107	T107-SA

Hub Size (inches)	E		L †		TA		TB		X	
	Grayloy–Iron	Aluminum	Grayloy–Iron	Aluminum	Grayloy–Iron	Aluminum	Grayloy–Iron	Aluminum ‡	Grayloy–Iron	Aluminum ‡
1/2	E17	E17-SA	L17	—	TA17	—	TB17	TB17-SA	X17	X17-SA
3/4	E27	E27-SA	L27	—	TA27	—	TB27	TB27-SA	X27	X27-SA
1	E37	E37-SA	L37	—	TA37	—	TB37	TB37-SA	X37	X37-SA
1-1/4	—	—	L47	—	TA47	—	TB47	TB47-SA	X47	X47-SA
1-1/2	—	—	L57	—	TA57	—	TB57	TB57-SA	X57	X57-SA
2	—	—	L67	—	TA67	—	TB67	TB67-SA	X67	X67-SA

** Refer to following pages for Wiring Capacity Table.*
† L Unilets have double opening and are furnished with one steel cover, assembled.
*‡ PVC coating available on select aluminum bodies. Add suffix **-PVC** to catalog number.*

© September 2010

FM7™ Unilet® Conduit Outlet Bodies and Covers Wiring Capacity

For use with Rigid Steel, Rigid Aluminum and IMC Conduit.

Wiring Capacity: Combine Body and Cover Capacities for Total Usable Capacity per NEC 314.16(A)

	Capacity (in^3/dm^3)										
Hub Size (Inches)	C	E	LB	LL LR	L	T	TA	TB	X	Stamped Cover	Cast Cover
FM7™ Grayloy™-Iron Bodies and Covers: Threaded											
1/2	4.00/ 0.07	4.00/ 0.07	4.00/ 0.07	4.00/ 0.07	5.00/ 0.08	6.00/ 0.10	6.00/ 0.10	6.00/ 0.10	6.00/ 0.10	0.30/ 0.00	0.40/ 0.01
3/4	7.00/ 0.11	7.00/ 0.11	7.00/ 0.11	7.00/ 0.11	9.00/ 0.15	10.00/ 0.16	10.00/ 0.16	10.00/ 0.16	10.00/ 0.16	0.50/ 0.01	0.80/ 0.01
1	11.00/ 0.18	11.00/ 0.18	11.00/ 0.18	11.00/ 0.18	13.50/ 0.22	15.50/ 0.25	15.50/ 0.25	15.50/ 0.25	15.50/ 0.25	1.30/ 0.02	1.30/ 0.02
1-1/4	20.00/ 0.33	—	20.00/ 0.33	20.00/ 0.33	22.50/ 0.37	20.00/ 0.33	20.00/ 0.33	20.00/ 0.33	20.00/ 0.33	1.80/ 0.03	2.00/ 0.03
1-1/2	28.00/ 0.46	—	28.00/ 0.46	28.00/ 0.46	31.00/ 0.51	28.00/ 0.46	28.00/ 0.46	28.00/ 0.46	28.00/ 0.46	2.30/ 0.04	3.00/ 0.05
2	50.00/ 0.82	—	50.00/ 0.82	50.00/ 0.82	50.00/ 0.82	50.00/ 0.82	50.00/ 0.82	50.00/ 0.82	50.00/ 0.82	2.80/ 0.05	4.80/ 0.08
2-1/2	102.00/ 1.67	—	102.00/ 1.67	102.00/ 1.67	—	102.00/ 1.67	—	—	—	9.80/ 0.16	9.70/ 0.16
3	133.00/ 2.18	—	133.00/ 2.18	133.00/ 2.18	—	133.00/ 2.18	—	—	—	9.80/ 0.16	9.70/ 0.16
3-1/2	—	—	218.00/ 3.57	218.00/ 3.57	—	218.00/ 3.57	—	—	—	16.50/ 0.27	16.00/ 0.26
4	—	—	244.00/ 4.00	244.00/ 4.00	—	244.00/ 4.00	—	—	—	16.50/ 0.27	16.00/ 0.26
FM7™ Aluminum Bodies and Covers: Threaded											
1/2	4.00/ 0.07	4.00/ 0.07	4.00/ 0.07	4.00/ 0.07	—	6.00/ 0.10	—	6.00/ 0.10	6.00/ 0.10	0.30/ 0.005	0.40/ 0.007
3/4	7.00/ 0.11	7.00/ 0.11	7.00/ 0.11	7.00/ 0.11	—	10.00/ 0.16	—	10.00/ 0.16	10.00/ 0.16	0.50/ 0.008	0.80/ 0.01
1	11.00/ 0.18	11.00/ 0.18	11.00/ 0.18	11.00/ 0.18	—	15.50/ 0.25	—	15.50/ 0.25	15.50/ 0.25	1.30/ 0.02	1.30/ 0.02
1-1/4	20.00/ 0.33	—	20.00/ 0.33	20.00/ 0.33	—	20.00/ 0.33	—	20.00/ 0.33	20.00/ 0.33	1.80/ 0.03	2.00/ 0.03
1-1/2	28.00/ 0.46	—	28.00/ 0.46	28.00/ 0.46	—	28.00/ 0.46	—	28.00/ 0.46	28.00/ 0.46	2.30/ 0.04	3.00/ 0.05
2	50.00/ 0.82	—	50.00/ 0.82	50.00/ 0.82	—	50.00/ 0.82	—	50.00/ 0.82	50.00/ 0.82	2.80/ 0.05	4.80/ 0.08
2-1/2	102.00/ 1.67	—	102.00/ 1.67	102.00/ 1.67	—	102.00/ 1.67	—	—	—	9.80/ 0.16	9.70/ 0.16
3	133.00/ 2.18	—	133.00/ 2.18	133.00/ 2.18	—	133.00/ 2.18	—	—	—	9.80/ 0.16	9.70/ 0.16
3-1/2	—	—	218.00/ 3.57	218.00/ 3.57	—	218.00/ 3.57	—	—	—	16.50/ 0.27	16.00/ 0.26
4	—	—	244.00/ 4.00	244.00/ 4.00	—	244.00/ 4.00	—	—	—	16.50/ 0.27	16.00/ 0.26

© September 2010

FM7™ Unilet® Conduit Outlet Body Dimensions

For use with Rigid Steel, Rigid Aluminum and IMC Conduit.

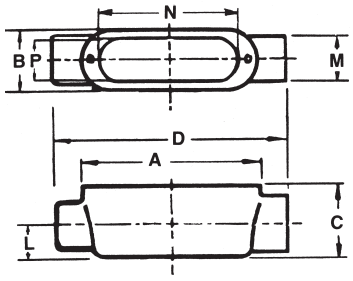

Type C

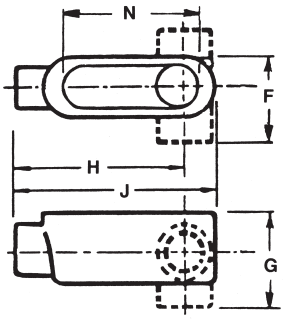

Type E, L, LB, LL, LR

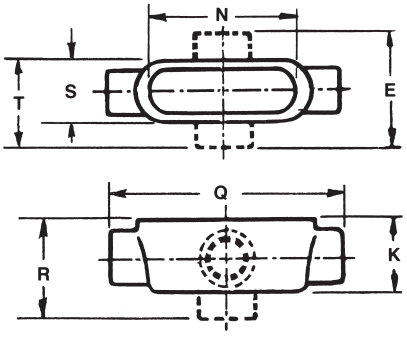

Type T, TA, TB, X

Hub Size (Inches)	Dimensions in Inches/Millimeters																	
	A	B	C	D	E	F	G	H	J	K	L	M	N	P	Q	R	S	T
1/2	3.63/ 92.2	1.38/ 35.1	1.38/ 35.1	5.38/ 136.7	3.31/ 84.1	2.25/ 57.2	2.25/ 57.2	3.94/ 100.1	4.56/ 115.8	1.75/ 44.5	0.63/ 16.0	1.25/ 31.8	3.19/ 81.0	0.94/ 23.9	5.63/ 143.0	2.63/ 66.8	1.56/ 39.6	2.44/ 62.0
3/4	4.25/ 108.0	1.56/ 39.6	1.63/ 41.4	6.00/ 152.4	3.50/ 88.9	2.44/ 62.0	2.50/ 63.5	4.44/ 112.8	5.19/ 131.8	2.00/ 50.8	0.75/ 19.1	1.50/ 38.1	3.81/ 96.8	1.13/ 28.7	6.25/ 158.8	2.88/ 73.2	1.88/ 47.8	2.63/ 66.8
1	5.00/ 127.0	1.75/ 44.5	1.88/ 47.8	7.00/ 177.8	3.88/ 98.6	2.75/ 69.9	2.88/ 73.2	5.19/ 131.8	6.00/ 152.4	2.25/ 57.2	0.88/ 22.4	1.75/ 44.5	4.50/ 114.3	1.38/ 35.1	7.25/ 184.2	3.25/ 82.6	2.00/ 50.8	3.00/ 76.2
1-1/4	5.50/ 139.7	2.19/ 55.6	2.31/ 58.7	7.44/ 189.0	4.13/ 104.9	3.19/ 81.0	3.31/ 84.1	5.44/ 138.2	6.50/ 165.1	2.31/ 58.7	1.13/ 28.7	2.19/ 55.6	5.00/ 127.0	1.75/ 44.5	7.44/ 189.0	3.31/ 84.1	2.19/ 55.6	3.19/ 81.0
1-1/2	6.00/ 152.4	2.44/ 62.0	2.56/ 65.0	8.19/ 208.0	4.63/ 117.6	3.50/ 88.9	3.69/ 93.7	5.94/ 150.9	7.13/ 181.1	2.56/ 65.0	1.25/ 31.8	2.44/ 62.0	5.44/ 138.2	1.94/ 49.3	8.19/ 208.0	3.63/ 92.2	2.44/ 62.0	3.56/ 90.4
2	7.00/ 177.8	3.00/ 76.2	3.13/ 79.5	9.19/ 233.4	5.19/ 131.8	4.06/ 103.1	4.25/ 108.0	6.63/ 168.4	8.13/ 206.5	3.13/ 79.5	1.50/ 38.1	3.00/ 76.2	6.38/ 162.1	2.44/ 62.0	9.19/ 233.4	4.19/ 106.4	3.00/ 76.2	4.13/ 104.9
2-1/2	9.00/ 228.6	4.25/ 108.0	3.63/ 92.2	12.00/ 304.8	—	5.75/ 146.1	5.13/ 130.3	8.75/ 222.3	10.50/ 266.7	3.63/ 92.2	1.75/ 44.5	3.50/ 88.9	8.38/ 212.9	3.56/ 90.4	12.00/ 304.8	—	4.25/ 108.0	5.75/ 146.1
3	9.00/ 228.6	4.25/ 108.0	4.38/ 111.3	12.00/ 304.8	—	5.75/ 146.1	5.88/ 149.4	8.38/ 212.9	10.50/ 266.7	4.38/ 111.3	2.13/ 54.1	4.25/ 108.0	8.38/ 212.9	3.56/ 90.4	12.06/ 306.3	—	4.25/ 108.0	5.75/ 146.1
3-1/2	11.00/ 279.4	5.25/ 133.4	4.88/ 124.0	—	—	6.94/ 176.3	6.56/ 166.6	10.25/ 260.4	12.69/ 322.3	4.88/ 124.0	2.38/ 60.5	4.75/ 120.7	10.25/ 260.4	4.50/ 114.3	14.31/ 363.5	—	5.25/ 133.4	6.94/ 176.3
4	11.00/ 279.4	5.25/ 133.4	5.38/ 136.7	—	—	6.94/ 176.3	7.06/ 179.3	10.00/ 254.0	12.69/ 322.3	5.38/ 136.7	2.63/ 66.8	5.25/ 133.4	10.25/ 260.4	4.50/ 114.3	14.31/ 363.5	—	5.25/ 133.4	6.94/ 176.3

Fraction/Decimal Equivalents (Inches)

Fraction	Decimal	Fraction	Decimal	Fraction	Decimal	Fraction	Decimal
1/16	0.06	5/16	0.31	9/16	0.56	13/16	0.81
1/8	0.13	3/8	0.38	5/8	0.63	7/8	0.88
3/16	0.19	7/16	0.44	11/16	0.69	15/16	0.94
1/4	0.25	1/2	0.50	3/4	0.75	1	1.00

© November 2011

FM7™ Unilet® Conduit Outlet Bodies

For use with Rigid Steel, Rigid Aluminum and IMC Conduit.

Applications

- Serve as pulling fittings.
- Make bends in conduit system.
- Provide openings for splicing.
- Connect and change direction of conduit runs.
- Allow connections for branch runs.
- Permit access to conductors for maintenance.

Features

- Smooth, rounded integral bushings in hubs protect conductor insulation.
- Accurately tapped, tapered threads for tight, rigid joints and excellent ground continuity.
- Wedge-Lok™ Form-IN-Place covers with integral gasket are approved for use in wet locations. Grayloy-iron bodies with cast covers and gasket are approved for use in wet locations.
- Unique Wedge-Lok™ clip cover design allows easy removal at any later time, without damaging the conduit body. The cover is secured with clips, not screws.
- Completely interchangeable with Crouse-Hinds ✣ Form 7™ ✣ bodies, gaskets and covers. Equivalent FM7 and Form 7™ units have identical applications and installation dimensions.
- Flat back design provides greater cubic content for easier wire pulling, and more room for splicing. Fits flush and snug against flat surfaces for more stable installation.
- Smooth hub bushings and cover openings protect conductor insulation. Smooth hub openings allow easy conduit joining.
- Pan-head cover screws secure cover clips and provide superior screwdriver seating and torque. Cover screws and clips are captive to prevent loss.
- Hub size, body style, compliance data, maximum wire number/ size and cubic capacity molded into body.

Standard Materials

- Body: Grayloy-iron or copperfree (4/10 of 1% max.) aluminum
- Covers: Grayloy-iron, copperfree (4/10 of 1% max.) aluminum or steel
- Cover screws: stainless steel

Standard Finishes

- Grayloy-iron bodies and covers: triplecoat — (1) zinc electroplate, (2) chromate, and (3) epoxy powder coat
- Cast aluminum bodies and covers: epoxy powder coat
- Steel covers: zinc electroplate
- Stamped aluminum covers: natural finish

Certifications and Compliances

- UL Standard: 514A , 514B
- UL Listed: E2527
- CSA Standard: C22.2 No. 18.3
- CSA Certified: 065183
- NEMA Standard: FB-1

Options

- PVC coating available on select aluminum bodies and covers. Add suffix **-PVC** to catalog number.

Type LB

Illustrated Features

Conduit Body with Cast Aluminum Cover, 1" Type C shown

Grayloy™–Iron, 1" Type C shown with cut–away body and cover to illustrate Wedge–Lok™ Clip Cover detail

Illustrated views are cut away to demonstrate back configurations.

Appleton FM7 (C57, 1–1/2")
28 Cubic Inches Capacity
Flat–Back Design

Crouse–Hinds Form 7 (C57, 1–1/2")
26 Cubic Inches Capacity

✣ *Crouse-Hinds and Form 7 are registered trademarks of Cooper Crouse-Hinds.*

© September 2010

FM7™ Unilet® Conduit Bodies

For use with Rigid Steel, Rigid Aluminum and IMC Conduit.

Appleton FM7 Conduit Bodies *

Hub Size (inches)	C		LB		LL		LR		T	
	Grayloy–Iron	Aluminum ‡	Grayloy–Iron	Aluminum ‡	Grayloy–Iron	Aluminum ‡	Grayloy–Iron	Aluminum ‡	Grayloy–Iron	Aluminum ‡
1/2	C17	C17-SA	LB17	LB17-SA	LL17	LL17-SA	LR17	LR17-SA	T17	T17-SA
3/4	C27	C27-SA	LB27	LB27-SA	LL27	LL27-SA	LR27	LR27-SA	T27	T27-SA
1	C37	C37-SA	LB37	LB37-SA	LL37	LL37-SA	LR37	LR37-SA	T37	T37-SA
1-1/4	C47	C47-SA	LB47	LB47-SA	LL47	LL47-SA	LR47	LR47-SA	T47	T47-SA
1-1/2	C57	C57-SA	LB57	LB57-SA	LL57	LL57-SA	LR57	LR57-SA	T57	T57-SA
2	C67	C67-SA	LB67	LB67-SA	LL67	LL67SA	LR67	LR67-SA	T67	T67-SA
2-1/2	C77	C77-SA	LB77	LB77-SA	LL77	LL77-SA	LR77	LR77-SA	T77	T77-SA
3	C87	C87-SA	LB87	LB87-SA	LL87	LL87-SA	LR87	LR87-SA	T87	T87-SA
3-1/2	—	—	LB97	LB97-SA	LL97	LL97-SA	LR97	LR97-SA	T97	T97-SA
4	—	—	LB107	LB107-SA	LL107	LL107-SA	LR107	LR107-SA	T107	T107-SA

Hub Size (inches)	E		L †		TA		TB		X	
	Grayloy–Iron	Aluminum	Grayloy–Iron	Aluminum	Grayloy–Iron	Aluminum	Grayloy–Iron	Aluminum ‡	Grayloy–Iron	Aluminum ‡
1/2	E17	E17-SA	L17	—	TA17	—	TB17	TB17-SA	X17	X17-SA
3/4	E27	E27-SA	L27	—	TA27	—	TB27	TB27-SA	X27	X27-SA
1	E37	E37-SA	L37	—	TA37	—	TB37	TB37-SA	X37	X37-SA
1-1/4	—	—	L47	—	TA47	—	TB47	TB47-SA	X47	X47-SA
1-1/2	—	—	L57	—	TA57	—	TB57	TB57-SA	X57	X57-SA
2	—	—	L67	—	TA67	—	TB67	TB67-SA	X67	X67-SA

** Refer to following pages for Wiring Capacity Table.*
† L Unilets have double opening and are furnished with one steel cover, assembled.
*‡ PVC coating available on select aluminum bodies. Add suffix **-PVC** to catalog number.*

© September 2010

FM7™ Unilet® Conduit Outlet Bodies and Covers Wiring Capacity

For use with Rigid Steel, Rigid Aluminum and IMC Conduit.

Wiring Capacity: Combine Body and Cover Capacities for Total Usable Capacity per NEC 314.16(A)

	Capacity (in^3/dm^3)										
Hub Size (Inches)	C	E	LB	LL LR	L	T	TA	TB	X	Stamped Cover	Cast Cover
FM7™ Grayloy™-Iron Bodies and Covers: Threaded											
1/2	4.00/ 0.07	4.00/ 0.07	4.00/ 0.07	4.00/ 0.07	5.00/ 0.08	6.00/ 0.10	6.00/ 0.10	6.00/ 0.10	6.00/ 0.10	0.30/ 0.00	0.40/ 0.01
3/4	7.00/ 0.11	7.00/ 0.11	7.00/ 0.11	7.00/ 0.11	9.00/ 0.15	10.00/ 0.16	10.00/ 0.16	10.00/ 0.16	10.00/ 0.16	0.50/ 0.01	0.80/ 0.01
1	11.00/ 0.18	11.00/ 0.18	11.00/ 0.18	11.00/ 0.18	13.50/ 0.22	15.50/ 0.25	15.50/ 0.25	15.50/ 0.25	15.50/ 0.25	1.30/ 0.02	1.30/ 0.02
1-1/4	20.00/ 0.33	—	20.00/ 0.33	20.00/ 0.33	22.50/ 0.37	20.00/ 0.33	20.00/ 0.33	20.00/ 0.33	20.00/ 0.33	1.80/ 0.03	2.00/ 0.03
1-1/2	28.00/ 0.46	—	28.00/ 0.46	28.00/ 0.46	31.00/ 0.51	28.00/ 0.46	28.00/ 0.46	28.00/ 0.46	28.00/ 0.46	2.30/ 0.04	3.00/ 0.05
2	50.00/ 0.82	—	50.00/ 0.82	50.00/ 0.82	50.00/ 0.82	50.00/ 0.82	50.00/ 0.82	50.00/ 0.82	50.00/ 0.82	2.80/ 0.05	4.80/ 0.08
2-1/2	102.00/ 1.67	—	102.00/ 1.67	102.00/ 1.67	—	102.00/ 1.67	—	—	—	9.80/ 0.16	9.70/ 0.16
3	133.00/ 2.18	—	133.00/ 2.18	133.00/ 2.18	—	133.00/ 2.18	—	—	—	9.80/ 0.16	9.70/ 0.16
3-1/2	—	—	218.00/ 3.57	218.00/ 3.57	—	218.00/ 3.57	—	—	—	16.50/ 0.27	16.00/ 0.26
4	—	—	244.00/ 4.00	244.00/ 4.00	—	244.00/ 4.00	—	—	—	16.50/ 0.27	16.00/ 0.26
FM7™ Aluminum Bodies and Covers: Threaded											
1/2	4.00/ 0.07	4.00/ 0.07	4.00/ 0.07	4.00/ 0.07	—	6.00/ 0.10	—	6.00/ 0.10	6.00/ 0.10	0.30/ 0.005	0.40/ 0.007
3/4	7.00/ 0.11	7.00/ 0.11	7.00/ 0.11	7.00/ 0.11	—	10.00/ 0.16	—	10.00/ 0.16	10.00/ 0.16	0.50/ 0.008	0.80/ 0.01
1	11.00/ 0.18	11.00/ 0.18	11.00/ 0.18	11.00/ 0.18	—	15.50/ 0.25	—	15.50/ 0.25	15.50/ 0.25	1.30/ 0.02	1.30/ 0.02
1-1/4	20.00/ 0.33	—	20.00/ 0.33	20.00/ 0.33	—	20.00/ 0.33	—	20.00/ 0.33	20.00/ 0.33	1.80/ 0.03	2.00/ 0.03
1-1/2	28.00/ 0.46	—	28.00/ 0.46	28.00/ 0.46	—	28.00/ 0.46	—	28.00/ 0.46	28.00/ 0.46	2.30/ 0.04	3.00/ 0.05
2	50.00/ 0.82	—	50.00/ 0.82	50.00/ 0.82	—	50.00/ 0.82	—	50.00/ 0.82	50.00/ 0.82	2.80/ 0.05	4.80/ 0.08
2-1/2	102.00/ 1.67	—	102.00/ 1.67	102.00/ 1.67	—	102.00/ 1.67	—	—	—	9.80/ 0.16	9.70/ 0.16
3	133.00/ 2.18	—	133.00/ 2.18	133.00/ 2.18	—	133.00/ 2.18	—	—	—	9.80/ 0.16	9.70/ 0.16
3-1/2	—	—	218.00/ 3.57	218.00/ 3.57	—	218.00/ 3.57	—	—	—	16.50/ 0.27	16.00/ 0.26
4	—	—	244.00/ 4.00	244.00/ 4.00	—	244.00/ 4.00	—	—	—	16.50/ 0.27	16.00/ 0.26

© September 2010

FM7™ Unilet® Conduit Outlet Body Dimensions

For use with Rigid Steel, Rigid Aluminum and IMC Conduit.

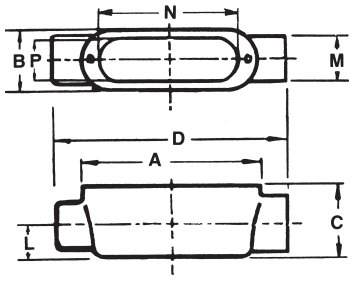

Type C

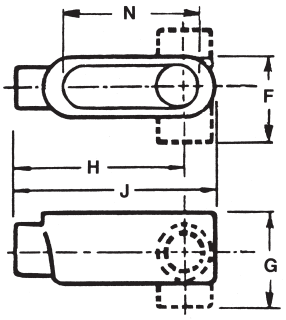

Type E, L, LB, LL, LR

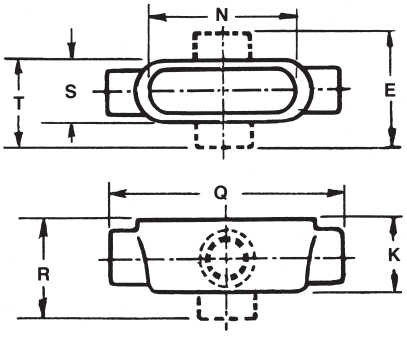

Type T, TA, TB, X

Hub Size (Inches)	Dimensions in Inches/Millimeters																	
	A	B	C	D	E	F	G	H	J	K	L	M	N	P	Q	R	S	T
1/2	3.63/ 92.2	1.38/ 35.1	1.38/ 35.1	5.38/ 136.7	3.31/ 84.1	2.25/ 57.2	2.25/ 57.2	3.94/ 100.1	4.56/ 115.8	1.75/ 44.5	0.63/ 16.0	1.25/ 31.8	3.19/ 81.0	0.94/ 23.9	5.63/ 143.0	2.63/ 66.8	1.56/ 39.6	2.44/ 62.0
3/4	4.25/ 108.0	1.56/ 39.6	1.63/ 41.4	6.00/ 152.4	3.50/ 88.9	2.44/ 62.0	2.50/ 63.5	4.44/ 112.8	5.19/ 131.8	2.00/ 50.8	0.75/ 19.1	1.50/ 38.1	3.81/ 96.8	1.13/ 28.7	6.25/ 158.8	2.88/ 73.2	1.88/ 47.8	2.63/ 66.8
1	5.00/ 127.0	1.75/ 44.5	1.88/ 47.8	7.00/ 177.8	3.88/ 98.6	2.75/ 69.9	2.88/ 73.2	5.19/ 131.8	6.00/ 152.4	2.25/ 57.2	0.88/ 22.4	1.75/ 44.5	4.50/ 114.3	1.38/ 35.1	7.25/ 184.2	3.25/ 82.6	2.00/ 50.8	3.00/ 76.2
1-1/4	5.50/ 139.7	2.19/ 55.6	2.31/ 58.7	7.44/ 189.0	4.13/ 104.9	3.19/ 81.0	3.31/ 84.1	5.44/ 138.2	6.50/ 165.1	2.31/ 58.7	1.13/ 28.7	2.19/ 55.6	5.00/ 127.0	1.75/ 44.5	7.44/ 189.0	3.31/ 84.1	2.19/ 55.6	3.19/ 81.0
1-1/2	6.00/ 152.4	2.44/ 62.0	2.56/ 65.0	8.19/ 208.0	4.63/ 117.6	3.50/ 88.9	3.69/ 93.7	5.94/ 150.9	7.13/ 181.1	2.56/ 65.0	1.25/ 31.8	2.44/ 62.0	5.44/ 138.2	1.94/ 49.3	8.19/ 208.0	3.63/ 92.2	2.44/ 62.0	3.56/ 90.4
2	7.00/ 177.8	3.00/ 76.2	3.13/ 79.5	9.19/ 233.4	5.19/ 131.8	4.06/ 103.1	4.25/ 108.0	6.63/ 168.4	8.13/ 206.5	3.13/ 79.5	1.50/ 38.1	3.00/ 76.2	6.38/ 162.1	2.44/ 62.0	9.19/ 233.4	4.19/ 106.4	3.00/ 76.2	4.13/ 104.9
2-1/2	9.00/ 228.6	4.25/ 108.0	3.63/ 92.2	12.00/ 304.8	—	5.75/ 146.1	5.13/ 130.3	8.75/ 222.3	10.50/ 266.7	3.63/ 92.2	1.75/ 44.5	3.50/ 88.9	8.38/ 212.9	3.56/ 90.4	12.00/ 304.8	—	4.25/ 108.0	5.75/ 146.1
3	9.00/ 228.6	4.25/ 108.0	4.38/ 111.3	12.00/ 304.8	—	5.75/ 146.1	5.88/ 149.4	8.38/ 212.9	10.50/ 266.7	4.38/ 111.3	2.13/ 54.1	4.25/ 108.0	8.38/ 212.9	3.56/ 90.4	12.06/ 306.3	—	4.25/ 108.0	5.75/ 146.1
3-1/2	11.00/ 279.4	5.25/ 133.4	4.88/ 124.0	—	—	6.94/ 176.3	6.56/ 166.6	10.25/ 260.4	12.69/ 322.3	4.88/ 124.0	2.38/ 60.5	4.75/ 120.7	10.25/ 260.4	4.50/ 114.3	14.31/ 363.5	—	5.25/ 133.4	6.94/ 176.3
4	11.00/ 279.4	5.25/ 133.4	5.38/ 136.7	—	—	6.94/ 176.3	7.06/ 179.3	10.00/ 254.0	12.69/ 322.3	5.38/ 136.7	2.63/ 66.8	5.25/ 133.4	10.25/ 260.4	4.50/ 114.3	14.31/ 363.5	—	5.25/ 133.4	6.94/ 176.3

Fraction/Decimal Equivalents (Inches)

Fraction	Decimal	Fraction	Decimal	Fraction	Decimal	Fraction	Decimal
1/16	0.06	5/16	0.31	9/16	0.56	13/16	0.81
1/8	0.13	3/8	0.38	5/8	0.63	7/8	0.88
3/16	0.19	7/16	0.44	11/16	0.69	15/16	0.94
1/4	0.25	1/2	0.50	3/4	0.75	1	1.00

© November 2011