M-Max™ Series Adjustable Frequency Drive

User Manual

Effective October 2013
Supersedes February 2013

Powering Business Worldwide

Disclaimer of Warranties and Limitation of Liability

The information, recommendations, descriptions and safety notations in this document are based on Eaton Corporation's ("Eaton") experience and judgment and may not cover all contingencies. If further information is required, an Eaton sales office should be consulted. Sale of the product shown in this literature is subject to the terms and conditions outlined in appropriate Eaton selling policies or other contractual agreement between Eaton and the purchaser.

THERE ARE NO UNDERSTANDINGS, AGREEMENTS, WARRANTIES, EXPRESSED OR IMPLIED, INCLUDING WARRANTIES OF FITNESS FOR A PARTICULAR PURPOSE OR MERCHANTABILITY, OTHER THAN THOSE SPECIFICALLY SET OUT IN ANY EXISTING CONTRACT BETWEEN THE PARTIES. ANY SUCH CONTRACT STATES THE ENTIRE OBLIGATION OF EATON. THE CONTENTS OF THIS DOCUMENT SHALL NOT BECOME PART OF OR MODIFY ANY CONTRACT BETWEEN THE PARTIES.

In no event will Eaton be responsible to the purchaser or user in contract, in tort (including negligence), strict liability or other-wise for any special, indirect, incidental or consequential damage or loss whatsoever, including but not limited to damage or loss of use of equipment, plant or power system, cost of capital, loss of power, additional expenses in the use of existing power facilities, or claims against the purchaser or user by its customers resulting from the use of the information, recommendations and descriptions contained herein. The information contained in this manual is subject to change without notice.

Cover Photo: M-Max Series Drives

Support Services

The goal of Eaton is to ensure your greatest possible satisfaction with the operation of our products. We are dedicated to providing fast, friendly, and accurate assistance. That is why we offer you so many ways to get the support you need. Whether it's by phone, fax, or e-mail, you can access Eaton's support information 24 hours a day, seven days a week. Our wide range of services is listed below.

You should contact your local distributor for product pricing, availability, ordering, expediting, and repairs.

Web Site

Use the Eaton Web site to find product information. You can also find information on local distributors or Eaton's sales offices.

Web Site Address

www.eaton.com/electrical

EatonCare Customer Support Center

Call the EatonCare Support Center if you need assistance with placing an order, stock availability or proof of shipment, expediting an existing order, emergency shipments, product price information, returns other than warranty returns, and information on local distributors or sales offices.

Voice: 877-ETN-CARE (877-386-2273) (8:00 a.m.–6:00 p.m. Eastern Time U.S. [UTC –5])

FAX: 800-752-8602

After-Hours Emergency: 800-543-7038
(6:00 p.m.–8:00 a.m. Eastern Time U.S. [UTC –5])

If you are in the U.S. or Canada, and have OI or PLC questions, you can take advantage of our toll-free line for technical assistance with hardware and software product selection, system design and installation, and system debugging and diagnostics. Technical support engineers are available for calls during regular business hours.

Drives Technical Resource Center

Voice: 800-322-4986 or +1 828-651-0984 (8:00 a.m.–5:00 p.m. Central Time U.S. [UTC –6])
Fax: +1 920-262-6070
e-mail: TRCDrives@Eaton.com

For Customers in Europe, Contact:

Eaton Industries GmbH
Electrical Sector
After Sales Service
Hein-Moeller-Str. 7-11
D-53115 Bonn

Phone: +49 (0) 228 6 02-3640
Fax: +49 (0) 228 6 02-61400
Hotline: +49 (0) 180 5 223822

e-mail: AfterSalesEGBonn@Eaton.com
www.moeller.net/aftersales

Table of Contents

SAFETY

Before Commencing the Installation x
Definitions and Symbols xi
Hazardous High Voltage xi
Warnings and Cautions xi

ABOUT THIS MANUAL

Writing Conventions 1
Abbreviations and Symbols 1
Input Supply Voltages 2
Units 2

M-MAX SERIES OVERVIEW

Notes on the Second MMX Upgrade 3
Component Identification 4
Checking the Delivery 5
Nameplate Rating Data 6
Catalog Number Selection 7
Technical Data and Specifications 9
Description of the M-Max 13
Features 13
Selection Criteria 15
Proper Use 16
Maintenance and Inspection 16
Storage 17
Charging DC Link Capacitors 17
Service and Warranty 17

ENGINEERING

Introduction 18
Electrical Power Network 19
Safety and Switching 21
EMC Measures 22
Motor and Application 23

INSTALLATION

Introduction 26
Installation Instructions 26
EMC Installation 30
Electrical Installation 32

OPERATION

Commissioning Checklist 50
Operational Hazard Warnings 51
Commissioning with Control Signal Terminals (Factory Setting) 52

ERROR AND WARNING MESSAGES

Introduction 56

Table of Contents, continued

PARAMETERS
Control Unit 60
Parameter Menu (PAR) 64
Operational Data Indicator (MON) 127
Setpoint Input (REF) 129

SERIAL INTERFACE (MODBUS RTU)
General Information About Modbus 131
Communications in a Modbus Network 131
Modbus Parameters 132
Modbus Process Data 137

APPENDIX A
Special Technical Data 142
Dimensions and Frame Sizes 148
PC Interface Card 151
Mounting Frame for Fieldbus Connection 153
PROFIBUS DP Fieldbus Interface Card 157
Cables, Fuses and Disconnect Devices 158
List of Parameters 161

APPENDIX B
Door Panel Keypad Adapter System—Mounting Instructions 180

List of Figures

M-Max Frequency Converter 3
Control Signal Terminals and Microswitches 3
M-Max Series 4
Scope of Supply 5
Overview of the M-Max Device (FS1–FS3) 13
Overview of the M-Max Device (FS4 and FS5) 13
Block Diagram, Elements of M-Max Frequency Inverters 14
Selection Criteria 15
Drive System (PDS) 18
AC Power Networks with Grounded Center Point (TN-/TT Networks) 19
EMC Environment and Category 22
Parallel Connection of Several Motors to One Frequency Inverter 23
Example of a Motor Ratings Plate 24
Star and Delta Circuit Types 24
V/Hz-Characteristic Curve 24
Bypass Motor Control (Example) 25
Mounting Position (FS1–FS3) 26
Mounting Position (FS4 and FS5) 26
Air-Cooling Space 27
Minimum Clearance at the Front 27
Air-Baffle Due to Increased Circulation with Device Fan 27
Mounting Dimensions 28
Configuration for Mounting with Screws 28
Mounting Rail Conforming with IEC/EN 60715 29
Fastening to the Mounting Rail 29
Demounting 29
Mounting the Cable Routing Plate and the Brackets 29
EMC-Compliant Setup (Example: M-Max) 31
Three-Phase Input Connection 33
Connection to Power Section 33
Ground Connection 33
Connection in Power Section 34
Screened Connection Cable 35
Connection with Twisted Cable Shielding 35
Four-Core Shielded Motor Supply Cable 35
Position of Control Signal Terminals 38
Prevent the Shield from Becoming Unbraided 38
Example for a Single-Side Connection (PES) to the Frequency Inverter 38
Example for an Insulated End of the Control Cable 38
Control Signal Terminals Assignments and Designations 39
Microswitch Factory Settings 39
Control Signal Terminals (Digital and Analog Inputs/Outputs) 41
Analog Setpoint Inputs AI1 and AI2 41
Analog Setpoint Value Signal, for Example, from a Superordinate Controller (PLC) . . . 41
Analog Output AO (Connection Examples) 42

List of Figures, continued

Digital Inputs with Internal Supply Voltage 42
Digital Inputs with External Supply Voltage 42
Digital Inputs with Internal Supply Voltage (Negative Logic, Sink Type) 42
Digital Inputs with External Supply Voltage (Negative Logic, Sink Type) 43
Digital Output DO and Connection Examples 43
Connection Example and Operation of DO in Source and Sink Type 43
Relay Outputs with Connection Examples, Control Relay with Suppressor Circuit 44
Fixed Connection Cables at U >48V (Relay) 44
Connection Terminals of the Serial Interface and Microswitch S4 (Bus Terminating Resistor) 45
Two-Wire RS485 Connection 45
MMX11...N_ Block Diagram 46
MMX12...F_ Block Diagram 47
MMX32, MMX34 and MMX35 Block Diagram 48
Operational Data Indicator (Operational) 53
Operation (RUN) via Control Signal Terminal (I/O) with Left Rotating Field (REV) (for example, –12.34 Hz) 53
Start-Stop Command with Maximum Setpoint Value Voltage, Acceleration Ramp 3s 54
Brief Instructions: Steps to the Motor Start 55
Example of an Error Message (Undervoltage) 56
Example of an Alarm Message 56
View of the Keypad with LCD Display, Function Keys and Interface (LCD = Liquid Crystal Display) 60
LCD Display (Areas) 61
Operational Data Indicator (Operational) 61
Parameter Menu (P1.1 = 1, Quick Configuration) 64
Schematic Representation of Parameter Access 64
Analog Inputs AI1 and AI2 68
Example of Scaled Analog Input Signals 69
Example of Scaled Analog Input Signals with Offset 69
Filter Time Constant 70
Digital Inputs for Source and Sink Type 71
Control Logic Reaction to a Rising or Falling Edge (Source Type, Sink Type) 71
DI1 (FWD) + DI2 = REV 76
Example: Start Stop Impulse 76
Analog Output AO 77
Digital Outputs 78
Acceleration and Deceleration Time 83
S-Formed Curve for Acceleration and Deceleration Ramps 84
Automatic Restart After Error Message (Two Start Attempts) 85
Motor Parameters from Ratings Plate 88
Circuits (Delta, Star) 88
Motor Cooling Power 92
Calculation of Motor Temperature 92

List of Figures, continued

Function Chart for OD (PID System Deviation) 98
PID Controller, Actual Value Message FBV 99
Block Diagram, Ventilation with "Two-Stage Control" 99
Fixed Frequencies FF1, FF2 and FF3 (= FF1 + FF2) 100
Example: Activation of the Fixed Frequencies in the Factory Setting with Acceleration and Deceleration Ramps 100
Example A, Program Cycle Executed Once (P10.9 = 1, P10.10 = 0) 104
Example B, Program Cycle Executed Once (P10.9 = 1, P10.10 = 192) 105
Example C, Program Cycle Executed Once in Steps (P10.9 = 2, P10.10 = 0) 106
V/Hz-Characteristic Curve (P11.1) 108
Speed Behavior without Slip Compensation 110
Equivalent Circuit Diagram for an Asynchronous Motor 110
Speed Behavior with Slip Compensation 110
Regenerative Braking with External Braking Resistor 115
Mechanical Brake 117
Logic Linking of A and B 118
Roller Conveyor with Rotary Table 123
Stop Function with Two Different Deceleration Times 124
Operational Data Indicator 127
Modbus Network with M-Max 131
Data Exchange Between Master and Slave 133
Dimensions and Frame Sizes, FS1–FS3 (FS = Frame Size) 148
Dimensions and Frame Sizes, FS4 and FS5 (FS = Frame Size) 149
Equipment Supplied MMX-COM-PC 151
Fitting the MMX-COM-PC Connection Module 151
Removing the MMX-COM-PC Connection Module 151
Upload 152
Download 152
Inserting the 9V Block Battery 152
Power Supply 153
Parameter Software MaxConnect 153
MMX-NET-XA Mounting Frame 153
Removing the Interface Cover on the M-Max 153
Fitting and Connecting the Mounting Plate of the MMX-NET-XA 154
Cover of the MMX-NET-XA for Holding the Fieldbus Interface Card 154
Connecting the Interface Card with the Frequency Inverter 154
MMX-NET-XB Interface Module 155
Remove Cover (FS4, FS5) 155
Mounting Accessories for FS4, FS5 155
Plastic Bridge for Holding the Control Terminals 155
Connecting the MMX-NET-XB Interface Module with the Fieldbus Interface Cards 156
XMX-NET-PD-A PROFIBUS DP Fieldbus Interface Card with Nine-Pole Sub-D Plug Connection 157
Fieldbus Connection 157
XMX-NET-DN-A DeviceNet Fieldbus Interface Card 157
Door Keypad Mounting Kit 180
Door Keypad Cut-out Dimensions 183
Door Keypad Dimensions 184

List of Tables

Unit Conversion Examples 2
Nameplate Inscriptions 6
Type Designation of the M-Max Frequency Inverters 7
Examples 8
General Rated Operational Data 9
Power Connection Voltages 11
Maintenance Measures and Intervals 16
Identification on the Residual-Current Circuit-Breakers 21
Assignment of Frequency Inverters to Example Motor Circuit 24
Minimum Clearance and Required Cooling Air 27
Stripping Lengths in the Power Section in inches (mm) 34
Arrangement and Size of the Connection Terminals 36
Possible Connection Line Sizes and Specifications on Control Signal Terminals 39
Factory-Set Control Terminal Functions 40
List of Fault Messages (F) and Warning Messages (AL) 57
Error Messages via Operating Unit 59
Control Unit Elements 60
Areas of the LCD Display 61
Setting Parameters 62
Predefined Application Parameters from Parameter P1.2 66
Default I/O 67
Parameter Selections 67
Analog Inputs 68
Digital Inputs 72
Analog Outputs 77
Digital Outputs 78
Drives Control 82
Motor 89
Protective Functions 90
PID Controller 95
Fixed Frequency 100
Fixed Frequency Setpoint Value 101
Determining the Program Number (P10.10) 102
Fixed Frequency Setpoint Value 103
V/Hz-Characteristic Curve 107
Braking 112
Logic Function 119
Second Parameter Set 121
System Parameter 125
Operational Data Indicator 127
Status Displays Examples 128
Setpoint Input (REF) 129
Modbus Parameters in the M-Max 132
Error Code Description 135

List of Tables, continued

Device Series MMX11 142
Device Series MMX12 143
Device Series MMX32 144
Device Series MMX34 145
Device Series MMX35 147
Dimensions and Frame Sizes 150
Fuses and Maximum Cross-Sections 159
Specified Fuses and Disconnect Devices 160
Quick Start Parameter Guide 161
System Parameters in the Quick Start 162
Default I/O 163
Parameter Selection 164
Analog Input 164
Digital Input 165
Analog Output 166
Digital Output 167
Drives Control 168
Motor 170
Protective Functions 170
PID Controller 171
Fixed Frequencies 172
V/Hz-Characteristic Curve 173
Braking 174
Logic Function 175
Second Parameter Set 176
System Parameters 177
Parameter Values Currently Being Measured 179
Door Keypad Components 180
Door Keypad Mounting Instructions 181
Door Keypad Mounting Instructions, continued 182

Safety

Warning!
Dangerous Electrical Voltage!

Before Commencing the Installation

- Disconnect the power supply of the device
- Ensure that devices cannot be accidentally restarted
- Verify isolation from the supply
- Earth and short circuit the device
- Cover or enclose any adjacent live components
- Follow the engineering instructions (IL04020001E) for the device concerned
- Only suitably qualified personnel in accordance with EN 50110-1/-2 (VDE 0105 Part 100) may work on this device/system
- Before installation and before touching the device ensure that you are free of electrostatic charge
- The functional earth (FE, PES) must be connected to the protective earth (PE) or the potential equalization. The system installer is responsible for implementing this connection
- Connecting cables and signal lines should be installed so that inductive or capacitive interference does not impair the automation functions
- Install automation devices and related operating elements in such a way that they are well protected against unintentional operation
- Suitable safety hardware and software measures should be implemented for the I/O interface so that an open circuit on the signal side does not result in undefined states in the automation devices
- Ensure a reliable electrical isolation of the extra-low voltage of the 24V supply. Only use power supply units complying with IEC 60364-4-41 (VDE 0100 Part 410) or HD384.4.41 S2
- Deviations of the input voltage from the rated value must not exceed the tolerance limits given in the specifications, otherwise this may cause malfunction and dangerous operation
- Emergency stop devices complying with IEC/EN 60204-1 must be effective in all operating modes of the automation devices. Unlatching the emergency-stop devices must not cause a restart
- Devices that are designed for mounting in housings or control cabinets must only be operated and controlled after they have been installed and with the housing closed. Desktop or portable units must only be operated and controlled in enclosed housings
- Measures should be taken to ensure the proper restart of programs interrupted after a voltage dip or failure. This should not cause dangerous operating states even for a short time. If necessary, emergency-stop devices should be implemented
- Wherever faults in the automation system may cause injury or material damage, external measures must be implemented to ensure a safe operating state in the event of a fault or malfunction (for example, by means of separate limit switches, mechanical interlocks, and so on)
- Depending on their degree of protection, adjustable frequency drives may contain live bright metal parts, moving or rotating components, or hot surfaces during and immediately after operation
- Removal of the required covers, improper installation, or incorrect operation of motor or adjustable frequency drive may cause the failure of the device and may lead to serious injury or damage
- The applicable national accident prevention and safety regulations apply to all work carried out on live adjustable frequency drives
- The electrical installation must be carried out in accordance with the relevant regulations (for example, with regard to cable cross sections, fuses, PE)
- Transport, installation, commissioning, and maintenance work must be carried out only by qualified personnel (IEC 60364, HD 384 and national occupational safety regulations)
- Installations containing adjustable frequency drives must be provided with additional monitoring and protective devices in accordance with the applicable safety regulations. Modifications to the adjustable frequency drives using the operating software are permitted
- All covers and doors must be kept closed during operation
- To reduce hazards for people or equipment, the user must include in the machine design measures that restrict the consequences of a malfunction or failure of the drive (increased motor speed or sudden standstill of motor). These measures include:
  - Other independent devices for monitoring safety-related variables (speed, travel, end positions, and so on)
  - Electrical or non-electrical system-wide measures (electrical or mechanical interlocks)
  - Never touch live parts or cable connections of the adjustable frequency drive after it has been disconnected from the power supply. Due to the charge in the capacitors, these parts may still be live after disconnection. Fit appropriate warning signs

Definitions and Symbols

WARNING

This symbol indicates high voltage. It calls your attention to items or operations that could be dangerous to you and other persons operating this equipment. Read the message and follow the instructions carefully.

This symbol is the "Safety Alert Symbol." It occurs with either of two signal words: CAUTION or WARNING, as described below.

WARNING

Indicates a potentially hazardous situation which, if not avoided, can result in serious injury or death.

CAUTION

Indicates a potentially hazardous situation which, if not avoided, can result in minor to moderate injury, or serious damage to the product. The situation described in the CAUTION may, if not avoided, lead to serious results. Important safety measures are described in CAUTION (as well as WARNING).

Hazardous High Voltage

WARNING

Motor control equipment and electronic controllers are connected to hazardous line voltages. When servicing drives and electronic controllers, there may be exposed components with housings or protrusions at or above line potential. Extreme care should be taken to protect against shock.

Stand on an insulating pad and make it a habit to use only one hand when checking components. Always work with another person in case an emergency occurs. Disconnect power before checking controllers or performing maintenance. Be sure equipment is properly grounded. Wear safety glasses whenever working on electronic controllers or rotating machinery.

Warnings and Cautions

CAUTION

When selecting the cable cross-section, take the voltage drop under load conditions into account.

The consideration of other standards (for example, VDE 0113 or VDE 0289) is the responsibility of the user.

CAUTION

The specified minimum PE conductor cross-sections (EN 50178, VDE 0160) must be maintained.

WARNING

With frequency inverters, only AC/DC sensitive residual current circuit breakers (RCD type B) are to be used (EN 50178, IEC 755).

CAUTION

Debounced inputs may not be used in the safety circuit diagram.

Residual current circuit breakers (RCD) are only to be installed between the AC power supply network and the frequency inverter.

CAUTION

Debounced inputs may not be used in the safety circuit diagram.

If you are connecting multiple motors on one frequency inverter, you must design the contactors for the individual motors according to utilization category AC-3.

Selecting the motor contactor is done according to the rated operational current of the motor to be connected.

CAUTION

Debounced inputs may not be used in the safety circuit diagram.

A changeover between the frequency inverter and the input supply must take place in a voltage-free state.

WARNING

The frequency inverter outputs (U, V, W) must not be connected to the input voltage (destruction of the device, risk of fire).

CAUTION

Debounced inputs may not be used in the safety circuit diagram.

Switch S1 must switch only when frequency inverter T1 is at zero current.

WARNING

Carry out wiring work only after the frequency inverter has been correctly mounted and secured.

WARNING

Electric shock hazard—risk of injuries!

Carry out wiring work only if the unit is de-energized.

CAUTION

Debounced inputs may not be used in the safety circuit diagram.

Fire hazard!

Only use cables, protective switches, and contactors that feature the indicated permissible nominal current value.

CAUTION

Debounced inputs may not be used in the safety circuit diagram.

Ground contact currents in frequency inverters are greater than 3.5 mA (AC). According to product standard IEC/EN 61800-5-1, an additional equipment grounding conductor must be connected, or the cross-section of the equipment grounding conductor must be at least 0.39 in^2 (10 mm^2).

WARNING

The components in the frequency inverter's power section remain energized up to five (5) minutes after the supply voltage has been switched off (intermediate circuit capacitor discharging time).

Pay attention to hazard warnings!

DANGER
5 MIN

WARNING

Discharge yourself on a grounded surface before touching the control signal terminals and the controller PCB. This protects the device from destruction by electrostatic discharge.

WARNING

On the control signal and the connection terminals of the frequency inverter, no leakage resistance tests are to be performed with an insulation tester.

WARNING

Wait at least 5 minutes after switching the supply voltage off before you disconnect a connection on the connection terminals (L1, L2/N, L3, U/T1, V/T2, W/T3, R+, R–) of the frequency inverter.

WARNING

Commissioning is only to be completed by qualified technicians.

WARNING

Hazardous voltage!

The safety instructions on Page x must be followed.

WARNING

The components in the frequency inverter's power section are energized if the supply voltage (line voltage) is connected. For instance: power terminals L1, L2/N, L3, R+, R–, U/T1, V/T2, W/T3.

The control signal terminals are isolated from the line power potential.

There can be a dangerous voltage on the relay terminals (22 to 26) even if the frequency inverter is not being supplied with line voltage (for example, integration of relay contacts in control systems with 230 Vac).

WARNING

Following a shutdown (fault, line voltage off), the motor can start automatically (when the supply voltage is switched back on) if the automatic restart function has been enabled.

(See parameter "P6.13".)

CAUTION

Debounced inputs may not be used in the safety circuit diagram.

Any contactors and switching devices on the power side are not to be opened during motor operation. Inching operation using the power switch is not permitted.

Contactors and switching devices (repair and maintenance switches) on the motor side must never be opened while the motor is in operation when the frequency inverter is set to speed control operating mode (P11.8 = 1).

Inching operation of the motor with contactors and switching devices in the output of the frequency inverter is not permitted.

CAUTION

Debounced inputs may not be used in the safety circuit diagram.

Make sure that there is no danger in starting the motor. Disconnect the driven machine if there is a danger in an incorrect operational status.

WARNING

If a start signal is present, the drive is restarted automatically, if P3.1 = 0 is set (REAF = Restart after FAULT) and the error message has been acknowledged (Reset).

WARNING

If a start command is present at a digital input (DI1–DI6) assigned at P3.21, the sequence control also starts automatically (without switch edge) when the power supply is switched on (for example, after a power supply failure).

CAUTION

A high torque at low speed causes a high thermal load on the motor. If temperatures are too high, the motor should be equipped with an external fan.

CAUTION

A high torque at low speed leads to a high thermal load on the motor.

CAUTION

Debounced inputs may not be used in the safety circuit diagram. DC braking results in additional heating of the motor. Configure the brake torque, set via braking current (P12.1) and the braking duration (P12.2 and P12.4), as low as possible.

CAUTION

Debounced inputs may not be used in the safety circuit diagram.

The motor parameters must be identical in both parameter groups (P7 and P14).

CAUTION

Although the registers to be written are consecutive, the ID numbers of the parameter list are not. Only the ID numbers in the process data list are consecutive.

CAUTION

Fuses and cables selected must always comply with the applicable regulations at the installation site.

About this Manual

Writing Conventions

Symbols used in this manual have the following meanings:

In order to make it easier to follow the manual, the name of the current chapter is shown on the header of the left-hand page and the name of the current section in shown on the header of the right-hand page. This does not apply to pages at the start of a chapter or to empty pages at the end of a chapter.

In order to make it easier to understand some of the figures included in this manual, the housing of the frequency inverter, as well as other safety-relevant parts, have been left out. However, it is important to note that the frequency inverter must always be operated with its housing placed properly, as well as with all required safety-relevant parts.

Please follow the installation instructions in the AWA8230-2416 installation instructions document.

This manual was created in an electronic format. You can also order a hard copy version of it.

All the specifications in this manual refer to the hardware and software versions documented in it.

More information on the series described here can be found on the Internet under:

www.eaton.com\drives

Abbreviations and Symbols

The following symbols and abbreviations are used in this manual:

Abbreviation	Description
EMC	Electromagnetic compatibility
FS	Frame size
GND	Ground, 0V potential
IGBT	Insulated-gate bipolar transistor
PDS	Power Drives System
LCD	Liquid Crystal Display
PES	EMC connection to PE for shielded lines
PNU	Parameter number
UL®	Underwriters Laboratories

M-Max frequency converters are divided into four voltage categories:

- 100V (MMX11)
- 200V (MMX12_, MMX32_)
- 400V (MMX34_)
- 575V (MMX35_)

Input Supply Voltages

The rated operating voltages stated in the following table are based on the standard values for networks with a grounded star point.

In ring networks (as found in Europe) the rated voltage at the transfer point of the power supply companies is the same as the value in the consumer networks (for example, 230V, 400V).

In star networks (as found in North America), the rated voltage at the transfer point of the utility companies is higher than in the consumer network. Example: 120V → 115V, 240V → 230V, 480V → 460V.

The wide tolerance range of M-Max frequency inverters takes into account a permissible voltage drop of an additional 4% (U_{LN} –14%) in load networks, while, in the 400V category, it takes into account the North American line voltage of 480V +10% (60 Hz).

The permissible connection voltages for the M-Max series are listed in "Appendix A".

The rated operational data of the input voltage is always based on the input frequencies 50/60 Hz (50 Hz –10% to 60 Hz +10%).

Units

Every physical dimension included in this manual uses imperial units. For the purpose of the equipment's UL certification, some of these dimensions are accompanied by their equivalents in metric or Système International d'Unites (SI) units.

Unit Conversion Examples

Designation	US-American Value	SI Value	Conversion Value	US-American Designation
Length	1 in	25.4 mm	0.0394	inch
Power	1 hp = 1.014 PS	0.7457 kW	1.341	horsepower
Torque	1 lbf in	0.113 Nm	8.851	pound-force inches
Temperature	1°F (T_F)	–17.222°C (T_C)	$T_F = T_C$ x 9/5 + 32	Fahrenheit
Speed	1 RPM	1 min^{-1}	1	revolutions per minute
Weight	1 lb	0.4536 kg	2.205	pound

M-Max Series Overview

This manual provides a description of the M-Max series frequency inverters. It provides special information required for project planning, installation, and for the operation of the MMX frequency inverter. All information applies to the specified hardware and software versions.

Please read the manual thoroughly before you install and operate the frequency inverter.

We assume that you have a good knowledge of engineering fundamentals and that you are familiar with handling electrical systems and machines, as well as with reading technical drawings.

Notes on the Second MMX Upgrade

This second edition of the manual describes the extended functionality of the MMX. This applies to M-Max series frequency inverters from production date 12W10 ≧S/N 91275113, see nameplate.

Essential features of this upgrade:

- New control circuit board with a more powerful microprocessor
- Side mounted interface for fieldbus connections **[1]**
- Two additional control buttons **[2]**
- Extended functionality for digital and analog inputs and outputs **[3]**

M-Max Frequency Converter

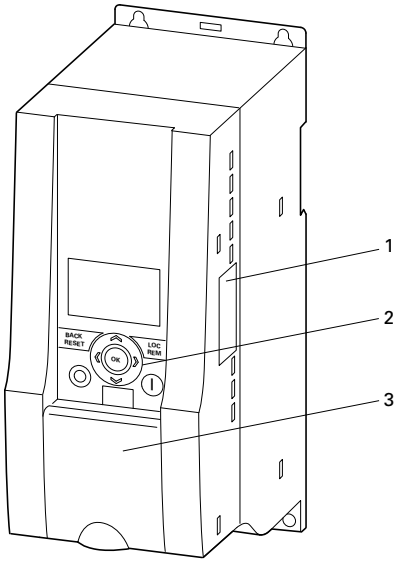

Control Signal Terminals and Microswitches

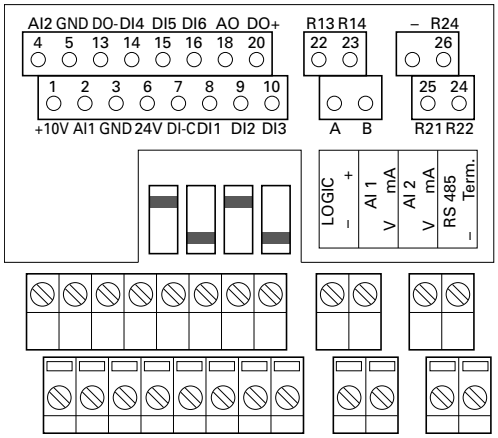

Component Identification

M-Max Series

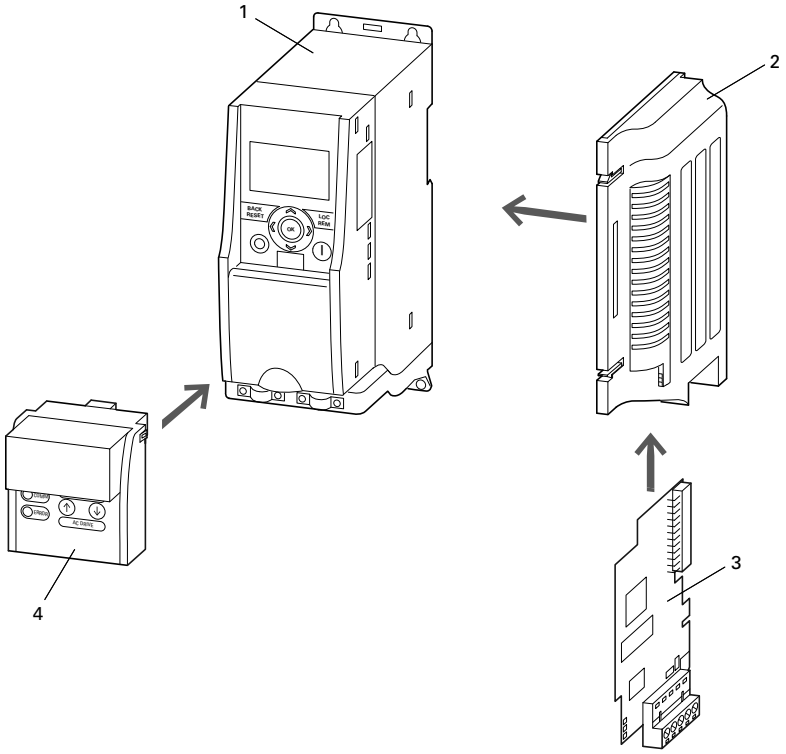

Item Number	Description
1	Frequency inverters MMX-_
2	Mounting frame (for fieldbus connection) MMX-NET-XA
3	Fieldbus connection: CANopen XMX-NET-CO-A PROFIBUS® DP with XMX-NET-PS-A screw terminals PROFIBUS DP with XMX-NET-PD-A Sub-Dm connector DeviceNet™ XMX-NET-DN-A
4	Communication module MMX-COM-PC
—	IP21 kit

Checking the Delivery

Before opening the packaging, go over the ratings plate on the packaging and check that the delivered frequency inverter is the same type as the one you ordered.

M-Max frequency converters have been carefully packaged and prepared for delivery. These devices should only be shipped in their original packaging with suitable transportation materials. Please take note of the labels and instructions on the packaging, as well as of those meant for the unpacked device.

Open the packaging with adequate tools and inspect the contents immediately after receipt in order to ensure that they are complete and undamaged.

Scope of Supply

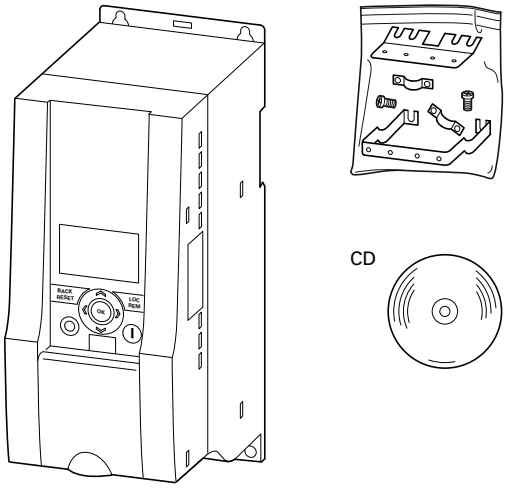

The packaging must contain the following parts:

- M-Max frequency inverter
- Accessory kit for EMC-suitable installation
- Installation instructions AWA8230-2416
- Data carrier (CD-ROM) with documentation for M-Max

Nameplate Rating Data

The device specific rating data of the M-Max is shown on the nameplate on the side of the device and on the rear of the control signal terminal cover.

The inscription of the nameplates has the following meaning (example):

Nameplate Inscriptions

Label	Meaning
MMX34AA3D3F0-0	Part number: **MMX** = M-Max series frequency inverter **3** = Three-phase power connection **4** = 400V voltage category **AA** = Instance (software version A and alphanumerical display) **3D3** = 3.3A rated operational current (3-decimal-3) **F** = Integrated radio interference suppression filter **0** = IP20 protection type **0** = No integrated optional assembly
Input	Power connection rating: Three-phase AC voltage (U_e 3~ AC), 380–480V voltage, 50/60 Hz frequency, input phase current (4.0A)
Output	Load side (motor) rating: Three-phase AC voltage (0 –U_e), output phase current (3.3A), output frequency (0–320 Hz)
Power	Assigned motor rating: 1.1 kW at 400V/1.5 hp at 460V for a four-pole internally-cooled or surface-cooled three-phase asynchronous motor (1500 min^{-1} at 50 Hz/1800 RPM at 60 Hz)
S/N	Serial number
	Frequency inverter is an electrical apparatus Read the manual (in this case AWB8230-1603) before making any electrical connections and commissioning
IP 20/Open type	Housing protection type: IP 20, UL (cUL®) open type
12W10	Manufacturing date: Week 12 of 2010

Catalog Number Selection

The type designation code and the part number of the M-Max series frequency inverter are in the following order:

Type Designation of the M-Max Frequency Inverters

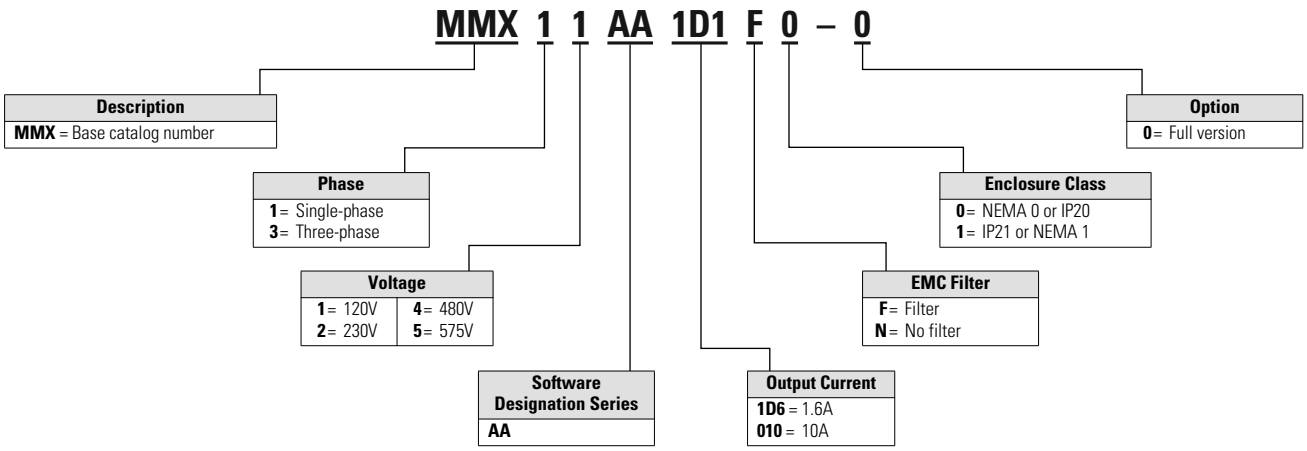

Examples

Label	Meaning
MMX11AA2D8N0-0	**MMX** = M-Max series frequency inverter: **1** = Single-phase power supply **1** = Rated voltage 115V **AA** = Type of software version and display unit **2D8** = 2.8A (rated operational current) **N** = No integrated interference suppression filter (no filter) **0** = IP20 protection type **–0** = No integrated optional assembly
MMX12AA1D7F0-0	**MMX** = M-Max series frequency inverter: **1** = Single-phase power supply **2** = Rated voltage 230V **AA** = Type of software version and display unit **1D7** = 1.7A (rated operational current) **F** = Integrated radio noise filter **0** = IP20 protection type **–0** = No integrated optional assembly
MMX32AA2D4N0-0	**MMX** = M-Max series frequency inverter: **3** = Three-phase input supply voltage **2** = Rated voltage 230V **AA** = Type of software version and display unit **2D4** = 2.4A (rated operational current) **N** = No integrated interference suppression filter (no filter) **0** = IP20 protection type **–0** = No integrated optional assembly
MMX34AA012F0-0	**MMX** = M-Max series frequency inverter: **3** = Three-phase input supply voltage **4** = Rated voltage 400V **AA** = Type of software version and display unit **012** = 12A (rated operational current) **F** = Integrated radio noise filter **0** = IP20 protection type **–0** = No integrated optional assembly
MMX34AA5D6N0-0	**MMX** = M-Max series frequency inverter: **3** = Three-phase input supply voltage **4** = Rated voltage 400V **AA** = Type of software version and display unit **5D6** = 5.6A (rated operational current) **N** = No integrated interference suppression filter (no filter) **0** = IP20 protection type **–0** = No integrated optional assembly

MMX11: The input voltage of 115V is raised to 230V (output voltage) through an internal voltage double connection.

Technical Data and Specifications

General Rated Operational Data

Description	Symbols ①	Unit	Specification
General			
Standards	—	—	EMC: IEC/EN 61800-3, Safety: IEC/EN61800-5, UL508C
Certifications and manufacturer's declarations on conformity	—	—	EMC: CE, CB, c-Tick Safety: CE, CB, UL, cUL
Production quality	—	—	RoHS, ISO® 9001
Climatic proofing	p_W	%	<95%, average relative humidity, noncondensing (EN50178)
Air quality			
Chemical vapors	—	—	IEC721-3-3: Device in operation, Class 3C2
Mechanical particles	—	—	IEC721-3-3: Device in operation, Class 3S2
Ambient temperature			
Operation	ϑ	°F (°C)	14° to 122° (–10° to 50°) ②
Storage	ϑ	°F (°C)	–40° to 158° (–40° to 70°)
Installation altitude	H	ft (m)	0–3281 ft (0–1000m) above sea level, over 3281 ft (1000m) with 1% power reduction per 328 ft (100m), maximum 6562 ft (2000m), at maximum 122°F (50°C) ambient temperature
Mounting position	—	—	Vertical ±90 for FS1–FS3 Vertical ±30 for FS4 and FS5
Protection type	—	—	IP20 for FS1–FS3 IP21/NEMA for FS4 and FS5
Busbar tag shroud	—	—	BGV A3 (VBG4, finger- and back-of-hand safe)
Mechanical shock resistance	—	—	IEC 68-2-27 Storage and transport: 15g, 11 ms (in the packaging) UPS drop test (for applicable UPS weights)
Vibration	—	—	EN 60068-2-6 3–150 Hz, oscillation amplitude 1 mm (peak) at 3–15.8 Hz, maximum acceleration amplitude 1g at 15.8–150 Hz
Emitted interference with internal EMC filter (maximum motor cable length)	—	—	C2: Class A in 1st environment (residential area with commercial utilization) C3: Class A in 2nd environment (industrial)
MMX…NO-O	—	—	No EMC filter
MMX…FO-O	—	—	C2 in first environment max. 3m motor cable length (FS1–FS3); 15m (FS4 and FS5) C3 in second environment max. 30m motor cable length (FS1–FS3); 50m (FS4 and FS5)

Notes

① Symbols used in technical data and formulas.

② 122°F (50°C) with lateral clearance of ≧0.79 in (20 mm) and reduced pulse frequency ≦4 kHz and altitude ≦1000m.

General Rated Operational Data, continued

Description	Symbols ①	Unit	Specification
Power Section			
Rated operational voltage	f_{LN}	Hz	at 50/60
MMX11	U_e	Vac	1~115 (110 –15% to 120 +10%)
MMX12	U_e	Vac	1~230 (208 –15% to 240 +10%)
MMX32	U_e	Vac	3~230 (208 –15% to 240 +10%)
MMX34	U_e	Vac	3~400 (380 –15% to 480 +10%)
MMX35	U_e	Vac	3~575 (–15% to +10%)
Input switch-on frequency	—	—	Maximum one time per minute
Input current	THD	%	>120
Short-circuit current	I_K	kA	Maximum <50
Input frequency	f_{LN}	Hz	50/60 (45–66 Hz ±0%)
Pulse frequency (switching frequency of the inverter)	f_{PWM}	kHz	1–16 (default = 6 kHz) ②
Operating mode	—	—	V/f characteristic curve control (FS), speed control with slip compensation
Output voltage	U_2	V	3 AC 230 (MMX11), 3 AC U_e (MMX12, MMX32, MMX34, MMX35)
Output frequency	f_2	Hz	0–320
Frequency resolution (setpoint value)	I	Hz	0.01
Rated operational current	I/I_e	%	100% continuous current at maximum 122°F (50°C) ambient temperature
Overload current	I/I_e	%	150 for 60s every 600s
Starting current	I/I_e	%	200 for 2s every 20s
Braking torque	M_B/M_N	%	≦30 for all sizes Up to maximum 100% M_N only as of size MMX34…4D3_ with external braking resistance
Control Section			
Control voltage (output)	U_c	Vdc	24, max. 50 mA
Reference voltage (output)	U_s	Vdc	10, max. 10 mA
Input, digital, parameter definable	—	—	6x, max. +30 Vdc, R_i >12k ohms
Permitted residual ripple with external control voltage (+24V)	—	—	Max. 5% $\triangle U_a/U_a$
Input, analog, parameterizable, selection via microswitches	—	—	2 x 0 (2) to +10 Vdc, R_i >200k ohms or 0 (4) to 20 mA, R_B ~200 ohms
Resolution	—	Bit	10
Output, digital, parameter definable	—	—	1 x transistor: 48 Vdc, max. 50 mA
Output relay, parameter definable	—	—	1 x N/O: 250 Vac, maximum 2A or 250 Vdc, max. 0.4A
Output relay, parameter definable	—	—	1 x changeover contact: 250 Vac, maximum 2A or 250 Vdc, maximum 0.4A
Serial interface	—	—	RS485/Modbus® RTU

Notes

① Symbols used in technical data and formulas.

② 122°F (50°C) with lateral clearance of ≧0.79 in (20 mm) and reduced pulse frequency ≦4 kHz and altitude ≦1000m.

Power Connection Voltages

Part Number	Rated Current I_e (A)	Overload Current (150%) I_{e150} (A)	Assigned Motor Rating P (230V, 50 Hz) (kW)	(A) ①	P (230V, 60 Hz) (hp)	(A) ①	Frame Size
1 AC 115V, 50/60 Hz (94–132V ±0%, 45–66 Hz ±0%)							
MMX11AA1D7_	1.7	2.6	0.25	1.4	1/4 ②	1.5 ②	FS2
MMX11AA2D4_	2.4	3.6	0.37	2	1/2	2.2	FS2
MMX11AA2D8_	2.8	4.2	0.55	2.7	3/4	2.2	FS2
MMX11AA3D7_	3.7	5.6	0.75	3.2	1	3.2	FS2
MMX11AA4D8_	4.8	7.2	1.1	4.6	1-1/2	4.2	FS3
1 AC 230V, 50/60 Hz (177–264V ±0%, 45–66 Hz ±0%)							
MMX12AA1D7_	1.7	2.6	0.25	1.4	1/4 ②	1.5 ②	FS1
MMX12AA2D4_	2.4	3.6	0.37	2	1/2	2.2	FS1
MMX12AA2D8_	2.8	4.2	0.55	2.7	3/4	2.2	FS1
MMX12AA3D7_	3.7	5.6	0.75	3.2	1	3.2	FS2
MMX12AA4D8_	4.8	7.2	1.1	4.6	1-1/2	4.2	FS2
MMX12AA7D0_	7	10.5	1.5	6.3	2	6.8	FS2
MMX12AA9D6_	9.6	14.4	2.2	8.7	3	9.6	FS3
3 AC 230V, 50/60 Hz (177–264V ±0%, 45–66 Hz ±0%)							
MMX32AA1D7_	1.7	2.6	0.25	1.4	1/4 ②	1.5 ②	FS1
MMX32AA2D4_	2.4	3.6	0.37	2	1/2	2.2	FS1
MMX32AA2D8_	2.8	4.2	0.55	2.7	3/4	2.2	FS1
MMX32AA3D7_	3.7	5.6	0.75	3.2	1	3.2	FS2
MMX32AA4D8_	4.8	7.2	1.1	4.6	1-1/2	4.2	FS2
MMX32AA7D0_	7	10.5	1.5	6.3	2	6.8	FS2
MMX32AA011_	11	14.4	2.2	8.7	3	9.6	FS3
MMX32AA017_	17	26.3	4	14.8	5	15.2	FS4
MMX32AA025_	25	37.5	5.5	19.6	7.5	22	FS4
MMX32AA031_	31	46.5	7.5	26.4	10	28	FS5
MMX32AA038_	38	57	11	38	15	28	FS5

Notes

The input voltage of 115V is raised to 230V (output voltage) through an internal voltage double connection.

① Rated motor currents for normal four-pole internally and surface-cooled three-phase asynchronous motors (1500 RPM at 50 Hz, 1800 RPM at 60 Hz).

② Calculated motor output (no standard value).

Power Connection Voltages, continued

Part Number	Rated Current I_e (A)	Overload Current (150%) I_{150} (A)	Assigned Motor Rating P (400V, 50 Hz) (kW)	(A) ①	P (460V, 60 Hz) (hp)	(A) ①	Frame Size
3 AC 400V, 50/60 Hz (323–528V ±0%, 45–66 Hz ±0%)							
MMX34AA1D3_	1.3	2	0.37	1.1	1/2	1.1	FS1
MMX34AA1D9_	1.9	2.9	0.55	1.5	3/4	1.6	FS1
MMX34AA2D4_	2.4	3.6	0.75	1.9	1	2.1	FS1
MMX34AA3D3_	3.3	5	1.1	2.6	1-1/2	3	FS2
MMX34AA4D3_	4.3	6.5	1.5	3.6	2	3.4	FS2
MMX34AA5D6_	5.6	8.4	2.2	5	3	4.8	FS2
MMX34AA7D6_	7.6	11.4	3	6.6	4 ②	6.4 ②	FS3
MMX34AA9D0_	9	13.5	4	8.5	5	7.6	FS3
MMX34AA012_	12	18	5.5	11.3	7-1/2	11	FS3
MMX34AA014_	14	21	7.5 ②	15.2 ③	10 ④	14	FS3
MMX34AA016_	16	24	7.5	15.2	10	14	FS4
MMX34AA023_	23	34.5	11	21.7	15	21	FS4
MMX34AA031_	31	46.5	15	29.3	20	27	FS5
MMX34AA038_	38	57	18.5	36	25	34	FS5
3 AC 575V, 50/60 Hz (489–632.5V ±0%, 45–66 Hz ±0%)							
MMX35AA1D7_	1.7	2.6	0.75	1.7	1	1.7	FS3
MMX35AA2D7_	2.7	4	1.5	2.7	2	2.7	FS3
MMX35AA3D9_	3.9	5.9	2.2	3.9	3	3.9	FS3
MMX35AA6D1_	6.1	9.2	4	6.1	5	6.1	FS3
MMX35AA9D0_	9.0	13.5	5.5	9.0	7.5	9.0	FS3

Notes

① Rated motor currents for normal four-pole internally-cooled and surface-cooled three-phase asynchronous motors (1500 min^{-1} at 50 Hz, 1800 min^{-1} at 60 Hz).

② Calculated motor output (no standard value).

③ Operation with reduced load torque (about –10% M_N).

④ Allocated motor output at a maximum ambient temperature of 104°F (40°C) and a maximum pulse frequency of 4 kHz.

Description of the M-Max

The following drawing shows an M-Max device.

Overview of the M-Max Device (FS1–FS3)

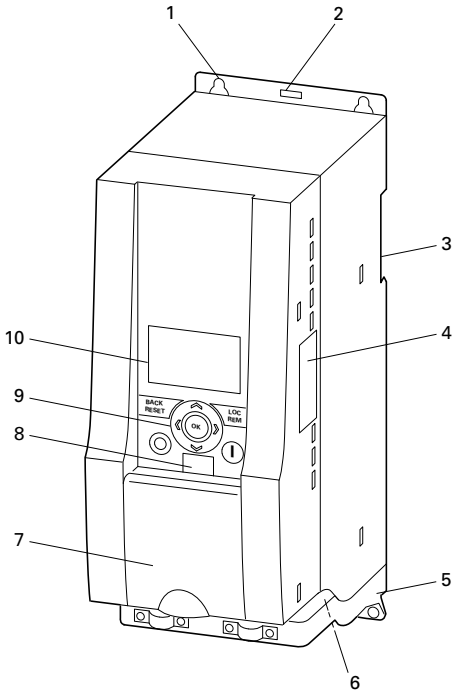

Item Number	Description
1	Mounting holes (screw fastening)
2	Release (removal from mounting rail)
3	Recess for mounting on mounting rail (DIN EN 50022-35)
4	Interface for fieldbus connection modules (option, MMX-NET-XA)
5	EMC installation accessories
6	Power section terminals
7	Cover flap of control signal terminals and microswitches
8	Interface for PC connection module MMX-COM-PC (option)
9	Keypad with 9 control buttons
10	Display unit (LCD)

Overview of the M-Max Device (FS4 and FS5)

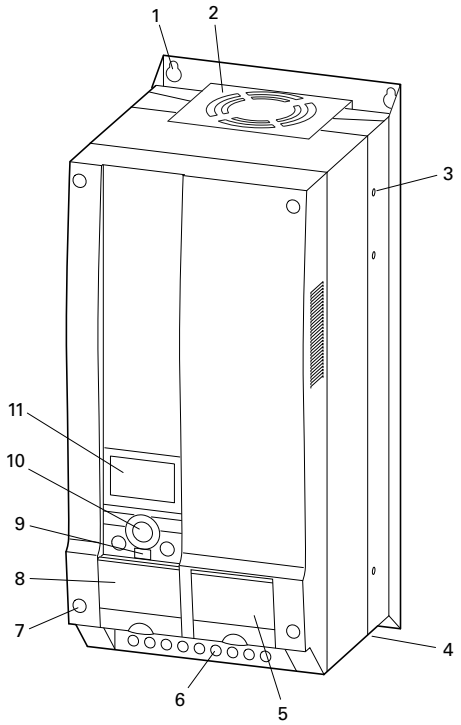

Item Number	Description
1	Fixing holes (screw fastening)
2	Device fans
3	Fixing holes for flange mounting (MMX-FLANGE…FS_ option required)
4	EMC mounting accessories
5	Cover flap for connecting the fieldbus interface cards
6	Power section terminals
7	Screws for opening the housing cover
8	Cover flap of control signal terminals and microswitches
9	Interface for PC connection module MMX-COM-PC (option)
10	Keypad with 9 control buttons
11	Display unit (LCD)

Features

The M-Max frequency inverter converts the voltage and frequency of an existing AC network into DC voltage. This DC voltage is used to generate a three-phase AC voltage with adjustable frequency and assigned amplitude values for the variable speed control of three-phase asynchronous motors.

Block Diagram, Elements of M-Max Frequency Inverters

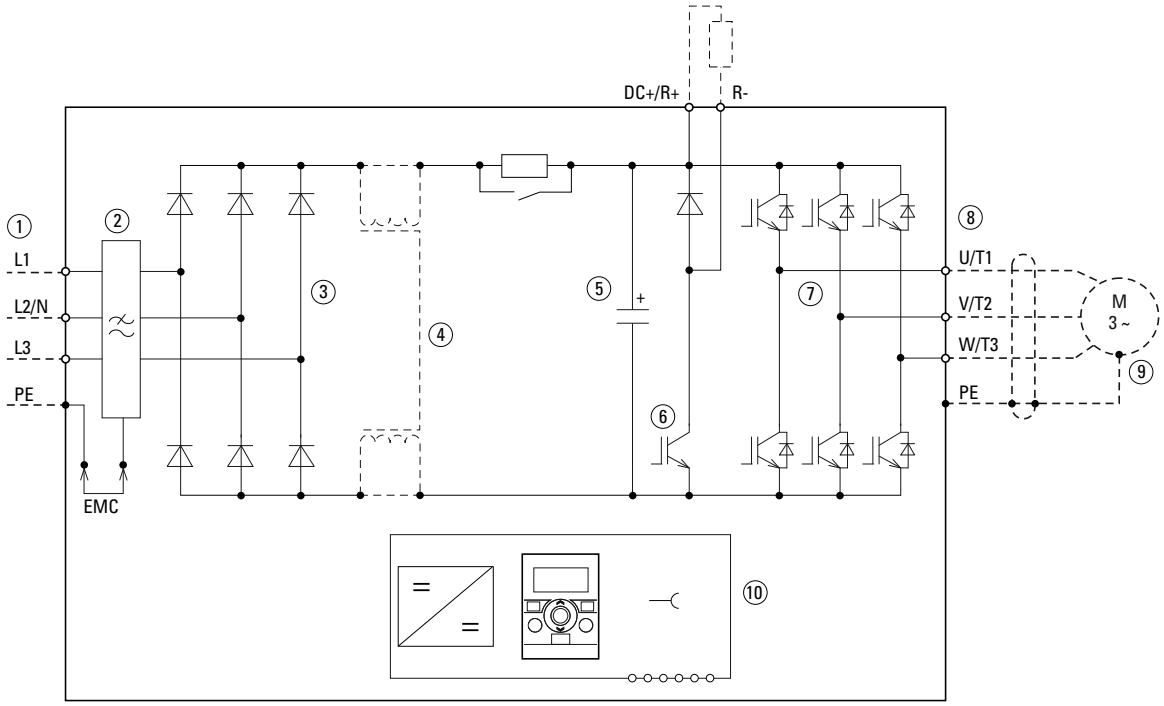

Item Number	Description
1	Supply L1, L2/N, L3, PE, mains supply voltage $U_{LN} = U_e$ at 50/60 Hz: MMX11: 100V class, single-phase mains connection (1 AC 120V), MMX12: 200V class, single-phase mains connection (1 AC 230V/240V), MMX32: 200V class, three-phase mains connection (3 AC 230V/240V), MMX34: 400V class, three-phase mains connection (3 AC 400V/480V). MMX35: 575V class, three-phase input connection (3 AC 575V)
2	Internal RFI filter (MMX…F_), category C2 and C3, in accordance with IEC/EN 61800-3 EMC connection of internal RFI filter with PE.
3	Rectifier bridge, single-phase (MMX1_) or three-phase (MMX3_), converts the AC voltage of the electrical network into DC voltage
4	DC choke, DC link choke (only for MMX32…F_ and MMX34…F_ in frame sizes FS4 and FS5)
5	DC link with charging resistor, capacitor and switching-mode power supply unit (SMPS = Switching-Mode Power Supply): DC link voltage U_{DC}: $U_{DC} = 1.41 \times U_{LN}$
6	Braking transistor: connections DC+/R+ and R- for external braking resistor (only for MMX32 and MMX34 from frame size FS2)
7	Inverter. The IGBT based inverter converts the DC voltage of the DC link (U_{DC}) into a three-phase AC voltage (U_2) with variable amplitude and frequency (f_2). Sinusoidal pulse width modulation (PWM) with V/f control can be switched to speed control with slip compensation
8	Motor connection U/T1, V/T2, W/T3 with output voltage U2 (0 to 100 % U_e) and output frequency f2 (0 to 320 Hz) output current (I_2): MMX11: 1.7 – 4.8A, MMX12: 1.7 – 9.6A, MMX32: 1.7 – 38A, MMX34: 1.3 – 38A, MMX35: 1.7 – 9.0A 100% at an ambient temperature of +50°C with an overload capacity of 150% for 60s every 600s and a starting current of 200% for 2s every 20s
9	Three-phase asynchronous motor, variable speed control of three-phase asynchronous motor for assigned motor shaft power values (P_2): MMX11: 0.25 – 1.1 kW (230V, 50 Hz) or 0.33 – 1 hp (230V, 60 Hz), MMX12: 0.25 – 2.2 kW (230V, 50 Hz) or 0.25 – 3 hp (230V, 60 Hz), MMX32: 0.25 – 11 kW (230V, 50 Hz) or 0.25 – 15 hp (230V, 60 Hz), MMX34: 0.37 – 18.5 kW (400V, 50 Hz) or 0.5 – 25 hp (460V, 60 Hz), MMX35: 1–7.5 hp (575V, 60 Hz)
10	Keypad with control buttons, LCD display, control voltage, control signal terminals, microswitches and interface for the PC interface card (Option)

Selection Criteria

The frequency inverter **[3]** is selected according to the supply voltage U_{LN} of the input supply **[1]** and the rated current of the assigned motor **[2]**. The circuit type (△/Y) of the motor must be selected according to the supply voltage **[1]**. The rated output current I_e of the frequency inverter must be greater than/equal to the rated motor current.

Selection Criteria

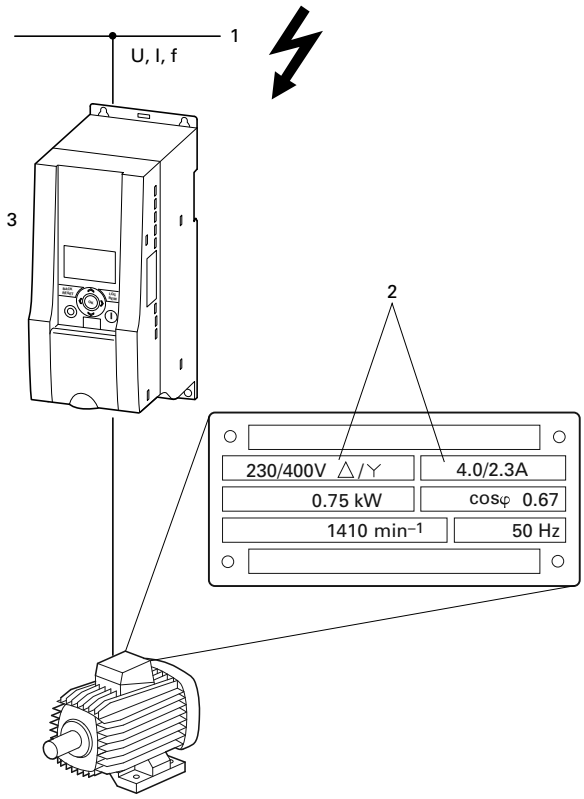

When selecting the drive, the following criteria must be known:

- Type of motor (three-phase asynchronous motor)
- Input voltage = rated operating voltage of the motor (for example, 3 AC~400V)
- Rated motor current (guide value, dependent on the circuit type and the supply voltage)
- Load torque (quadratic, constant)
- Starting torque
- Ambient temperature (rated value 122°F [50°C])

When connecting multiple motors in parallel to the output of a frequency inverter, the motor currents are added geometrically—separated by effective and idle current components. When you select a frequency inverter, make sure that it can supply the total resulting current. If necessary, for dampening and compensating the deviating current values, motor reactors or sinusoidal filters must be connected between the frequency inverter and the motor.

The parallel connection of multiple motors in the output of the frequency inverter is only permitted with V/Hz-characteristic curve control.

If you connect a motor to an operational frequency inverter, the motor draws a multiple of its rated operational current. When you select a frequency inverter, make sure that the starting current plus the sum of the currents of the running motors will not exceed the rated output current of the frequency inverter.

Switching in the output of the frequency inverter is only permitted with V/Hz-characteristic curve control.

The speed control with slip compensation (P11.8) increases the drive dynamics and optimizes the output. For this the frequency inverter processes all motor data in an electrical image.

The speed control operating mode (P11.8) must only be used with single drives (one motor at the output of the frequency inverter). The rated current of the motor must be assigned to the rated operational current of the frequency inverter (same rating).

Proper Use

The M-Max frequency inverters are not domestic appliances. They are designed only for industrial use as system components.

The M-Max frequency inverters are electrical apparatus for controlling variable speed drives with three-phase motors. They are designed for installation in machines or for use in combination with other components within a machine or system.

After installation in a machine, the frequency inverters must not be taken into operation until the associated machine has been confirmed to comply with the safety requirements of Machinery Safety Directive (MSD) 89/392/EEC (meets the requirements of EN 60204). The user of the equipment is responsible for ensuring that the machine use complies with the relevant EU Directives.

The CE markings on the M-MAX frequency inverter confirm that, when used in a typical drive configuration, the apparatus complies with the European Low Voltage Directive (LVD) and the EMC Directives (Directive 73/23/EEC, as amended by 93/68/EEC and Directive 89/336/EEC, as amended by 93/68/EEC).

In the described system configurations, M-Max frequency inverters are suitable for use in public and non-public networks.

A connection to IT networks (networks without reference to earth potential) is permissible only to a limited extent, because the device's built-in filter capacitors connect the network with the earth potential (enclosure). On earth free networks, this can lead to dangerous situations or damage to the device (isolation monitoring required).

To the output of the frequency inverter (terminals U, V, W) you must not:

- connect a voltage or capacitive loads (for example, phase compensation capacitors)
- connect multiple frequency inverters in parallel
- make a direct connection to the input (bypass)

Observe the technical data and connection requirements. For additional information, refer to the equipment nameplate or label at the frequency inverter, and the documentation.

Any other usage constitutes improper use.

Maintenance and Inspection

Provided that the general rating data (see "Nameplate Rating Data" on **Page 6**) and the special technical data (see "Special Technical Data" on **Page 142**) of the ratings concerned are observed, the M-Max frequency inverters are maintenance free. However, external influences may affect the function and the lifespan of the M-Max frequency inverter. We therefore recommend that the devices are checked regularly and the following maintenance measures are carried out at the specified intervals.

There are no plans for replacing or repairing individual components of M-Max frequency inverters.

If the M-Max frequency inverter is damaged by external influences, repair is not possible. Dispose of the device in accordance with the respectively applicable environmental laws and provisions for the disposal of electrical or electronic devices.

Maintenance Measures and Intervals

Maintenance Measure	Maintenance Interval
Clean cooling vents (cooling slits)	If required
Check the fan function	6–24 months (depending on the environment)
Filter in the switching cabinet doors (see manufacturer specifications)	6–24 months (depending on the environment)
Check the tightening torques of the terminals (control signal terminals, power terminals)	Regularly
Check connection terminals and all metallic surfaces for corrosion	6–24 months (depending on the environment)
Charge capacitors	12 months, see "Charging DC Link Capacitors" on **Page 17**

Storage

If the frequency inverter is stored before use, suitable ambient conditions must be ensured at the site of storage:

- Storage temperature: –40° to 158°F (–40° to 70°C)
- Relative average air humidity: <95%, non condensing (EN 50178)
- To prevent damage to the DC link capacitors, storage times longer than 12 months are not recommended (see "Charging DC Link Capacitors" below)

Charging DC Link Capacitors

After long storage times or long down times without a power supply (>12 months), the capacitors in the DC link must undergo controlled recharging, in order to avoid damage.

For this, the M-Max frequency inverters must be fed with a regulated DC power supply unit via two input connection terminals (for example, L1, L2/N). To avoid any possible excessive leakage currents from the capacitors, the inrush current should be limited to around 300 to 800 mA (depending on the rating). In this case, the frequency inverter must not be enabled (no start signal). The DC voltage must then be set to the values of the corresponding DC link voltage (U_{DC}) and fed for around two hours (regeneration time).

- MMX12, MMX32 about 324 Vdc (= 1.41 x U_{LN}) with single-phase line-to-line voltage (230V)
- MMX34 about 540 Vdc (= 1.35 x U_{LN}) with three-phase line-to-line voltage (400V)
- MMX35 (contact your local Eaton sales office for details)

MMX11: Due to the internal voltage doubler circuit, the capacitors cannot be recharged via the connection terminals. Contact your local Eaton distributor or sales office.

Service and Warranty

In the unlikely event that you have a problem with your M-Max frequency inverter, please contact Eaton Care Customer Support Center at 877-ETN-CARE (877-386-2273); option 2
option 6
option 3
or email: VFDaftermarketEG@eaton.com.

When you call, have the following information ready:

- the exact frequency inverter part no. (see nameplate)
- the date of purchase
- a detailed description of the problem that has occurred with the frequency inverter

If some of the information printed on the nameplate is not legible, please state only the information that is clearly legible. This information can also be found under the cover of the control terminals.

Information concerning the guarantee can be found in the Eaton General Terms and Conditions of Sale.

Engineering

Introduction

This chapter describes the most important features in the energy circuit of a drive system (PDS = Power Drive System) that you should take into consideration in your project planning.

Drive System (PDS)

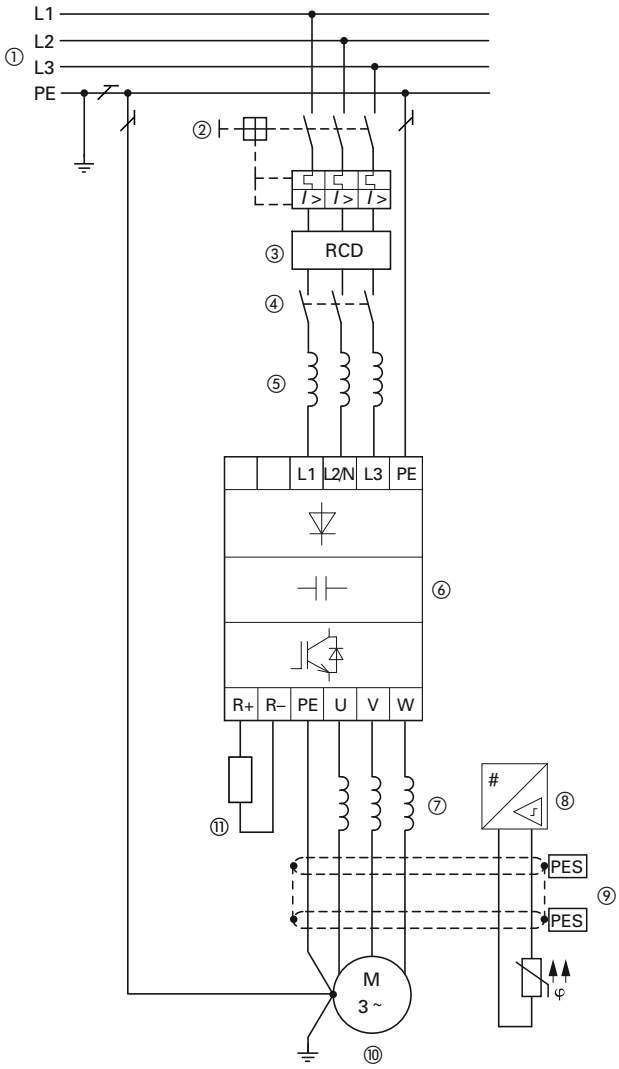

Item Number	Description
1	Network configuration, input voltage, input frequency, interaction with p.f. correction systems
2	Breakers, fuses, and cable cross-sections
3	Protection of persons and domestic animals with residual-current protective devices
4	Input contactor
5	Input line reactor, radio interference suppression filter, input filters
6	Frequency inverter: mounting, installation; power connection; EMC measures; circuit examples
7	Motor reactor, dv/dt filter, sine-wave filter
8	Motor protection; thermistor
9	Cable lengths, motor cables, shielding (EMC)
10	Motor and application, parallel operation of multiple motors on a frequency inverter, bypass circuit; DC braking
11	Braking resistance; dynamic braking

Electrical Power Network

Input Connection and Configuration

The M-Max series frequency inverters can be connected and operated with all control-point grounded AC power networks (see IEC 60364 for more information).

AC Power Networks with Grounded Center Point (TN-/TT Networks)

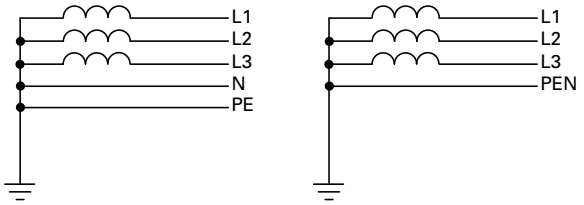

While planning the project, consider a symmetrical distribution to the three external conductors, if multiple frequency inverters with single-phase supplies are to be connected. The total current of all single-phase consumers is not to cause an overload of the neutral conductor (N-conductor).

The connection and operation of frequency inverters to asymmetrically grounded TN networks (phase-grounded Delta network "Grounded Delta", USA) or non-grounded or high-resistance grounded (over 30 ohms) IT networks is only conditionally permissible.

If the M-Max frequency inverters are connected to an asymmetrically grounded network or to an IT network (non-grounded, insulated), the internal interference suppression filter must be disconnected (unscrew the screw marked EMC, see "Electrical Installation" on **Page 32**). The required filtering for electromagnetic compatibility (EMC) is then no longer present.

Measures for electromagnetic compatibility are mandatory in a drive system in order to meet the legal requirements for EMC and low voltage regulations.

Good grounding measures are a prerequisite for the effective insert of further measures such as shielding or filters. Without respective grounding measures, further steps are superfluous.

Input Voltage and Frequency

The standardized input voltages (IEC 60038, VDE017-1) for energy suppliers (EVU) guarantee the following conditions at the transition points:

- Deviation from the rated value of voltage: maximum ±10%
- Deviation in voltage phase balance: maximum ±3%
- Deviation from rated value of the frequency: maximum ±4%

The broad tolerance band of the M-Max frequency inverter considers the rated value for
European as (EU: U_{LN} = 230V/400V, 50 Hz) and
American as (USA: U_{LN} = 240V/480V, 60 Hz) standard voltages:

- 120V, 50/60 Hz at MMX11
- 230V, 50 Hz (EU) and 240V, 60 Hz (USA) at MMX12 and MMX32
- 400V, 50 Hz (EU) and 480V, 60 Hz (USA) at MMX34_
- 575V, 50 Hz (EU) and 575V, 60 Hz (USA) at MMX35_

For the bottom voltage value, the permitted voltage drop of 4% in the consumer circuits is also taken into account.

- 100V device class (MMX11):
  110V –15% to 120V +10% (94V –0% to 132V +0%)
- 200V device class (MMX12, MMX32):
  208V –15% to 240V +10% (177V –0% to 264V +0%)
- 400V device class (MMX34):
  380V –15% to 480V +10% (323V –0% to 528V +0%)
- 575V device class (MMX35):
  575V –15% to 575V +10% (489V – 0% to 632.5V +0%)

The permitted frequency range is 50/60 Hz (45 Hz –0% –66 Hz +0%).

Voltage Balance

Because of the uneven loading on the conductor, and with the direct connection of greater power ratings, deviations from the ideal voltage form and asymmetrical voltages can be caused in three-phase AC power networks. These asymmetric divergences in the input voltage can lead to different loading of the diodes in input rectifiers with three-phase supplied frequency inverters, and as a result, an advance failure of this diode.

In the project planning for the connection of three-phase supplied frequency inverters (MMX32, MMX34, MMX35), consider only AC power networks that handle permitted asymmetric divergences in the input voltage ≦+3%.

If this condition is not fulfilled, or symmetry at the connection location is not known, the use of an assigned main choke is recommended.

Total Harmonic Distortion (THD)

The THD (Total Harmonic Distortion) is a measurement for the occurring harmonic distortion of the sinusoidal oscillation (input power side) input variables with the frequency inverter. It is given in percent of the total value.

$$K = \sqrt{\frac{U_2^2 + U_3^2 + U_4^2 + \ldots + U_n^2}{U_1^2 + U_2^2 + U_3^2 + U_4^2 + \ldots + U_n^2}} \bullet 100\%$$

U_1 = fundamental component
THD k = 0.1 → K = 10% ~ –20 dB (THD suppression)

$$THD = \frac{\sqrt{U_2^2 + U_3^2 + U_4^2 + \ldots + U_n^2}}{U_1}$$

With M-Max series frequency inverters, the permitted value for the total harmonic distortion THD is >120%.

Idle Power Compensation Devices

Compensation on the power supply side is not required for M-Max series frequency inverters. From the AC power supply network, they take on very little reactive power of the fundamental harmonics (cos φ ~ 0.98).

In the AC power networks with non-choked idle current compensation devices, current deviations can enable parallel resonance and undefinable circumstances.

In the project planning for the connection of frequency inverters to AC power networks with undefined circumstances, consider using main chokes.

Input Reactors

A input reactor (also called commutation inductor) increases the inductance of the power supply line. This extends the current flow period and dampens input deviations.

On frequency inverters, a input reactor limits the input feedback to permissible values. The harmonic current emissions that are fed back into the input network ("input feedback") are reduced. This reduces the input-side apparent current to about 30%.

Toward the frequency inverter, the input reactors dampen the interference from the supply network. This increases the withstand voltage of the frequency inverter and lengthens the lifespan (diodes of the input power rectifier, intermediate circuit capacitors).

For the operation of the M-Max frequency inverter, the application of main chokes is not necessary.

We do recommend, however, that an upstream main choke is used because the network quality is not known in most cases.

While planning the project, consider that a input reactor is only assigned to a single frequency inverter for isolation. Using a large input reactor for multiple small frequency inverters should therefore be avoided if at all possible.

When using an adapting transformer (assigned to a single frequency inverter), a main choke is not necessary.

Input reactors are designed based on the input current (I_{LN}) of the frequency inverter. Input chokes and the assignment to M-Max frequency inverters are explained in the appendix.

Safety and Switching

Fuses and Cable Cross-Sections

The fuses and wire cross-sections allocated for power-side connections depend on the rated input current I_{LN} of the frequency inverter (without input reactor).

CAUTION

When selecting the cable cross-section, take the voltage drop under load conditions into account.

The consideration of other standards (for example, VDE 0113 or VDE 0289) is the responsibility of the user.

The national and regional standards (for example VDE 0113, EN 60204) must be observed and the necessary approvals (for example UL) at the site of installation must be fulfilled.

When the device is operated in a UL-approved system, use only UL-approved breakers, fuses, fuse bases, and cables.

The leakage currents to ground (to EN 50178) are greater than 3.5 mA. The connection terminals marked PE and the housing must be connected with the ground circuit.

The leakage currents for the individual performance variables are listed on **Page 142**.

CAUTION

The specified minimum PE conductor cross-sections (EN 50178, VDE 0160) must be maintained.

Choose the cross-section of the PE conductor in the motor lines at least as large as the cross-section of the phase lines (U, V, W).

Cables and Fuses

The cross-sections of the cables and line protection fuses used must correspond with local standards.

For an installation in accordance with UL guidelines, the fuses and copper cable that are UL-approved and have a heat-resistance of 140° to 167°F (60° to 75°C) are to be used.

Use power cables with insulation according to the specified input voltages for the permanent installation. A shielded cable is not required on the input side.

A completely (360°) shielded low impedance cable is required on the motor side. The length of the motor cable depends on the RFI class and must not exceed 98 ft (30m) for the M-Max.

Residual-Current Device (RCD)

RCD (Residual Current Device): Residual current device, residual current circuit breaker (FI circuit breaker).

Residual current circuit breakers protect persons and animals from the existence (not the origination) of impermissibly high contact voltages. They prevent dangerous, and in some cases deadly injuries caused by electrical accidents, and also serve as fire prevention.

WARNING

With frequency inverters, only AC/DC sensitive residual current circuit breakers (RCD type B) are to be used (EN 50178, IEC 755).

Identification on the Residual-Current Circuit-Breakers

AC/DC sensitive (RCD, type B)		

Frequency inverters work internally with rectified AC currents. If an error occurs, the DC currents can block a type A RCD circuit breaker from triggering and therefore disable the protective functionality.

CAUTION

Debounced inputs may not be used in the safety circuit diagram.

Residual current circuit breakers (RCD) are only to be installed between the AC power supply network and the frequency inverter.

Safety-relevant leakage currents can occur while handling and when operating the frequency inverter, if the frequency inverter is not grounded (because of a fault).

Leakage currents to ground are mainly caused by foreign capacities with frequency inverters; between the motor phases and the shielding of the motor cable and via the Y-capacitors of the noise filter. The size of the leakage current is mainly dependent upon the:

- length of the motor cable
- shielding of the motor cable
- height of the pulse frequency (switching frequency of the inverter)
- design of the noise filter
- grounding measures at the site of the motor

The leakage current to ground is greater than 3.5 mA with a frequency inverter. Based on the requirements of EN 50178, an increased ground (PE) has to be connected. The cable cross-section must be at least 10 mm^2 or consist of two separately connected ground cables.

Residual current circuit breakers must be suitable for:

- the protection of installations with DC current component in case of fault scenario (RCD type B)
- high leakage currents (300 mA)
- brief discharges of pulse current spikes

Input Contactor

The input contactor enables an operational switching on and off of the supply voltage for the frequency inverter, and switching off in case of a fault.

The input contactor is designed based on the input current (I_{LN}) of the frequency inverter and the utilization category AC-1 (IEC 60947). Input contactors and the assignment to M-Max frequency inverters are explained in the appendix.

While planning the project, make sure that inching operation is not done via the input contactor of the frequency inverter on frequency-controlled drives, but through a controller input of the frequency inverter.

The maximum permitted operating frequency of the input voltage with the M-Max frequency inverter is one time per minute (normal operation).

EMC Measures

Electrical components in a system (machine) have a reciprocal effect on each other. Each device not only emits interference but is also affected by it. The interference can be produced by galvanic, capacitive, and/or inductive sources, or by electromagnetic radiation. In practice, the limit between line-conducted interference and emitted interference is around 30 MHz. Above 30 MHz, cables and conductors act like antennas that radiate electromagnetic waves.

Electromagnetic compatibility (EMC) for frequency controlled drives (variable speed drives) is implemented in accordance with product standard IEC/EN 61800-3. This includes the complete power drive system (PDS), from the input supply to the motor, including all components, as well as cables (see figure on **Page 18**). This type of drive system can consist of several individual drives.

The generic standards of the individual components in a PDS compliant with IEC/EN 61800-3 do not apply. These component manufacturers, however, must offer solutions that ensure standards-compliant use.

In Europe, maintaining the EMC guidelines is mandatory.

A declaration of conformity (CE) always refers to a "typical" power drive system (PDS). The responsibility to comply with the legally stipulated limit values and thus the provision of electromagnetic compatibility is ultimately the responsibility of the end user or system operator. This operator must also take measures to minimize or remove emission in the environment concerned (see figure below). He must also use means to increase the interference immunity of the devices of the system.

With their high interference immunity up to category C3, M-Max frequency inverters are ideal for use in harsh industrial networks (2nd environment).

With line-conducted emission, type MMX…-F_ frequency inverters (with integrated interference suppression filter) ensure the observance of the sensitive limit values of category C2 in environment 1. This requires an EMC-compliant installation (see **Page 32**) and the observance of the permissible motor cable lengths and maximum switching frequency (f_{PWM}) of the inverter.

Type MMX…-N_ frequency inverters can comply with the limit values of category C1 in environment 1 when used in conjunction with an assigned external interference suppression filter.

The required EMC measures should be taken into account in the engineering phase. Improvements and modifications during mounting and installation or even at the installation site involve additional and even considerably higher costs.

EMC Environment and Category

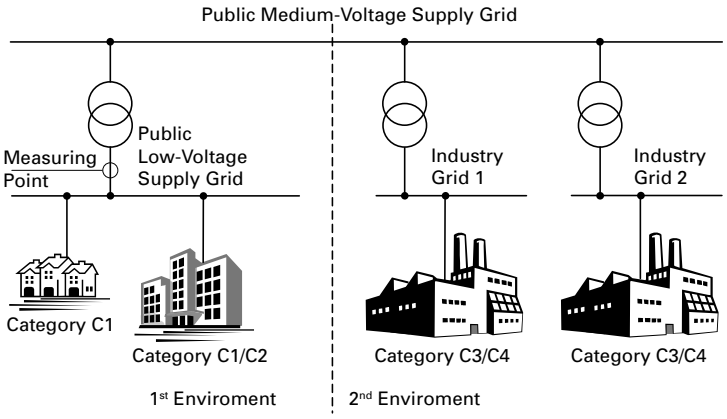

Motor and Application

Motor Selection

General recommendations for motor selection:

- Use three-phase powered asynchronous motors with short-circuit rotors and surface cooling, also called asynchronous motors or standard motors for the frequency-controlled drive system (PDS). Other specifications such as external rotor motors, slip-ring motors, reluctance motors, synchronous or servo motors can also be run with a frequency inverter, but normally require additional planning and discussion with the motor manufacturer
- Use only motors with at least heat class F (311°F [155°C] maximum steady state temperature)
- Four-pole motors are preferred (synchronous speed: 1500 min^{-1} at 50 Hz or 1800 min^{-1} at 60 Hz)
- Take the operating conditions into account for S1 operation (IEC 60034-1)
- When operating multiple motors in parallel on one frequency inverter, the motor output should not be more than three power classes apart
- Ensure that the motor is not overdimensioned. If a motor in speed control mode is underdimensioned, the motor rating must only be one rating level lower

Connecting Motors in Parallel

The M-Max frequency inverters allow parallel operation of several motors in V/Hz control mode:

- V/Hz control: several motors with the same or different rated operational data. The sum of all motor currents must be less than the frequency inverter's rated operational current
- V/Hz control: parallel control of several motors. The sum of the motor currents plus the motors' inrush currents must be less than the frequency inverter's rated operational current

Parallel operation at different motor speeds can be implemented only by changing the number of pole pairs and/or changing the motor's transmission ratio.

CAUTION

Debounced inputs may not be used in the safety circuit diagram.

If you are connecting multiple motors on one frequency inverter, you must design the contactors for the individual motors according to utilization category AC-3.

Selecting the motor contactor is done according to the rated operational current of the motor to be connected.

Parallel Connection of Several Motors to One Frequency Inverter

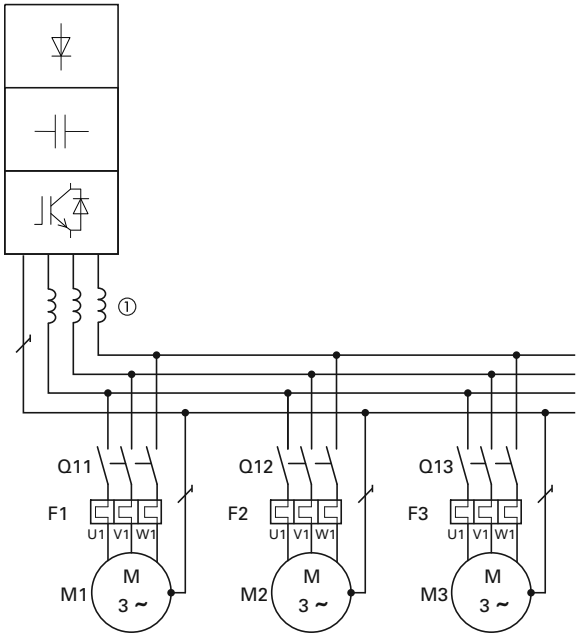

Connecting motors in parallel reduces the load resistance at the frequency inverter output. The total stator inductance is lower and the leakage capacity of the lines greater. As a result, the current distortion is greater than in a single-motor circuit. To reduce the current distortion, you should use motor reactors (see **[1]** in figure above) in the output of the frequency inverter.

The current consumption of all motors connected in parallel must not exceed the frequency inverter's rated output current I2N.

Electronic motor protection cannot be used when operating the frequency inverter with several parallel connected motors. You must, however, protect each motor with thermistors and/or overload relays.

The use of a motor protective circuit breaker at the frequency inverter's output can lead to nuisance tripping.

Motor and Circuit Type

The motor's stator winding can be connected in a star or delta configuration, in accordance with the rated operational data on the nameplate.

Example of a Motor Ratings Plate

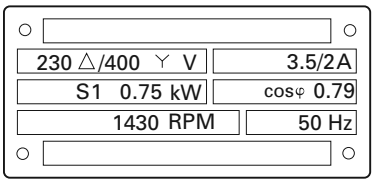

Star and Delta Circuit Types

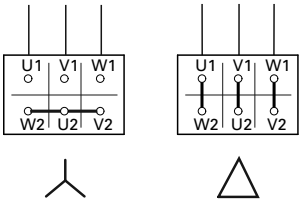

The three-phase motor with the rating plate based on the figure shown above, can be run in a star or delta connection. The operational characteristic curve is determined by the ratio of motor voltage and motor frequency, in this case.

87-Hz Characteristic Curve

In the delta circuit with 400V and 87 Hz, the motor shown in the figure above was released with three times-fold output (~1.3 kW).

Because of the higher thermal loading, using only the next higher motor output according to the list (1.1 kW) is recommended. The motor (in this example) therefore still has 1.47-fold higher output compared with the listed output (0.75 kW).

With the 87-Hz characteristic curve, the motor also works in the range from 50 to 87 Hz with an unattenuated field. The pull-out torque remains at the same level as in input operation with 50 Hz.

The heat class of the motor must be at least F in 87-Hz operation.

V/Hz-Characteristic Curve

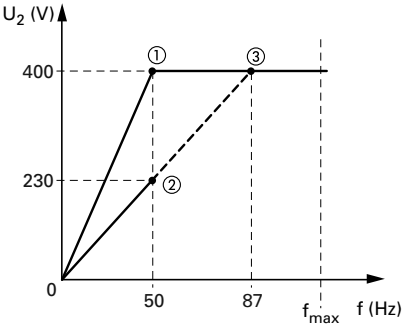

The following table shows the allocation of possible frequency inverters depending on the input voltage and the type of circuit.

Assignment of Frequency Inverters to Example Motor Circuit (See Figure Above)

Frequency Inverters	MMX12AA3D7_	MMX32AA3D7_	MMX34AA2D4_	MMX34AA4D3_
Rated operational current	3.7A	3.7A	2.4A	4.3A
Input voltage	1 AC 230V	1 AC 230V	3 AC 400V	3 AC 400V
Motor circuit	Delta	Delta	Star	Delta
V/Hz-characteristic curve	②	②	①	③
Motor current	3.5A	3.5A	2.0A	3.5A
Motor voltage	3 AC 0–230V	3 AC 0–230V	3 AC 0–400V	3 AC 0–230V
Motor speed	1430 min^{-1}	1430 min^{-1}	1430 min^{-1}	2474 min^{-1} ④
Motor frequency	50 Hz	50 Hz	50 Hz	87 Hz ④

Notes

① Star connection: 400V, 50 Hz.
② Delta connection: 230V, 50 Hz.
③ Delta connection: 400V, 87 Hz.
④ Note the permitted limit values of the motor.

Bypass Operation

If you want to have the option of operating the motor with the frequency inverter or directly from the input supply, the input branches must be interlocked mechanically.

CAUTION

Debounced inputs may not be used in the safety circuit diagram.

A changeover between the frequency inverter and the input supply must take place in a voltage-free state.

WARNING

The frequency inverter outputs (U, V, W) must not be connected to the input voltage (destruction of the device, risk of fire).

Bypass Motor Control (Example)

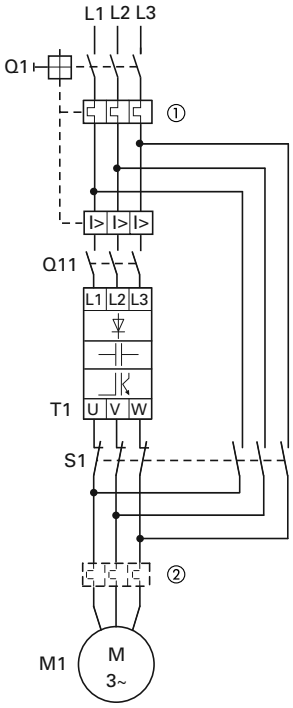

Item Number	Description
1	Input/bypass contactor
2	Output contactor

CAUTION

Debounced inputs may not be used in the safety circuit diagram.

Switch S1 must switch only when frequency inverter T1 is at zero current.

Contactors and switches (S1) in the frequency inverter output and for the direct start must be designed based on utilization category AC-3 for the rated operational current of the motor.

Connecting EX Motors

Note the following when connecting explosion-protected motors:

- The frequency inverter must be installed outside the EX area
- Note the branch- and country-specific standards for explosion-protected areas (ATEX 100a)
- Note the standards and information of the motor manufacturer regarding operation on frequency inverters—for example, if motor reactors (du/dt-limiting) or sinus filters are specified
- Temperature monitors in the motor windings (thermistor, thermo-Click) are not to be connected directly to frequency inverters but must be connected via an approved trigger apparatus for EX areas

Sinusoidal Filter

Sinusoidal filters are connected in the output of the frequency inverter. They allow the use of long motor cables with reduced conducted and radiated emission.

The upstream sinusoidal filter enables the reduction of losses and noise in the motor.

Disadvantage. Sinusoidal filters have a system voltage drop of around 30V per phase.

Note: Sinusoidal filters must only be used with permanently set pulse frequencies.

Installation

Introduction

This chapter provides a description of the installation and the electrical connections for the frequency inverter M-Max series.

While installing and/or assembling the frequency inverter, cover all ventilation slots in order to ensure that no foreign bodies can enter the device.

Perform all installation work with the specified tools and without the use of excessive force.

Installation Instructions

The instructions for installation in this manual apply for M-Max series frequency inverters under protection type IP20.

In order to meet the requirements in accordance with NEMA 1 (IP21), you must, depending on the size of the housing, use the optional housing accessories MMX-IP21-FS1, MMX-IP21-FS2 or MMX-IP21-FS3.

The required installation instructions are shown in the setup instructions AWA8230-2417.

Mounting Position

Mounting Position (FS1–FS3)

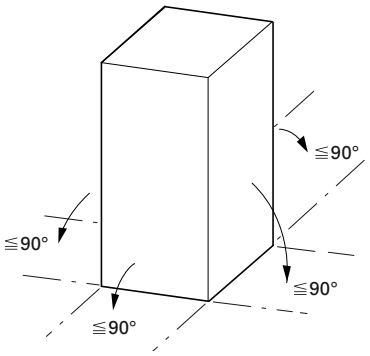

An installation that is turned by 180° (stood on its head) is not permitted.

Mounting Position (FS4 and FS5)

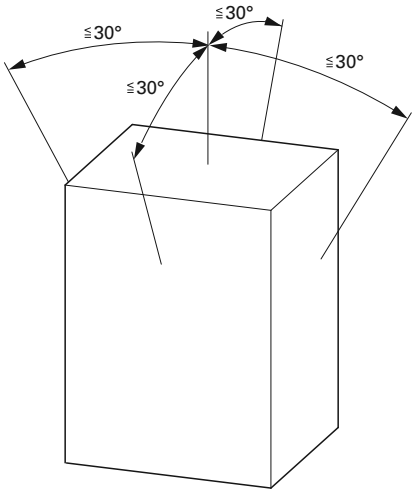

An installation that is turned by 180° (stood on its head) is not permitted.

The vertical mounting position may be tilted by up to 30 degrees.

Cooling Measures

In order to guarantee sufficient air circulation, enough thermal clearance must be ensured according to the frame size (rating) of the frequency inverter.

Air-Cooling Space

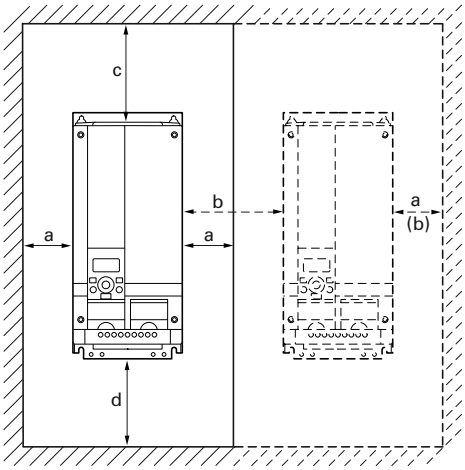

Minimum Clearance at the Front

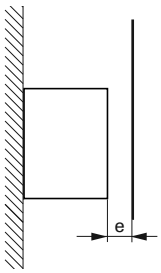

Note: The frequency inverters of the M-Max series are air-cooled with an internal fan.

Minimum Clearance and Required Cooling Air

	a ① mm	b ① mm	c mm	d mm	e mm	V m^3/h
FS1	20	50	100	50	15	10
FS2	20	50	100	50	15	10
FS3	20	50	100	50	15	30
FS4	20	50	100	100	20	45
FS5	20	50	120	100	20	75

Note

① With frame sizes FS1, FS2 and FS3 the side clearance can be 0 mm if the ambient air temperature does not exceed +40°C, the pulse frequency (P11.9) does not exceed 4 kHz and the elevation does not exceed 1000m.
Higher ambient air temperatures pulse frequencies and installation heights above 1000m require a minimum side clearance of 20 mm from a "passive" neighbor (housing wall) and a clearance of 50 mm from an "active" **[need info]** neighbor (frequency inverter, switched-mode power supply unit).
With MMX34…014_, the side clearance to a "passive" neighbor must always be 20 mm in all operating conditions and always 50 mm to the "active" neighbor.

Note: Please note that the installation makes it possible to open and close the control signal terminal covers without any problems.

Note: The pulse frequency (f_{PWM}) can be adjusted with parameter P11.9.

Note: Devices with strong magnetic fields (e.g. reactors or transformers) should not be installed in the immediate vicinity of the M-Max device.

Air-Baffle Due to Increased Circulation with Device Fan

If devices are arranged vertically above each other, the clearance between the two devices must at least be equal to dimension c + d ("active neighbors").

With frame sizes FS4 and FS5 a baffle must be fitted between the two devices. Otherwise, the upper device may overheat due to the device fan fitted at the top of the lower device.

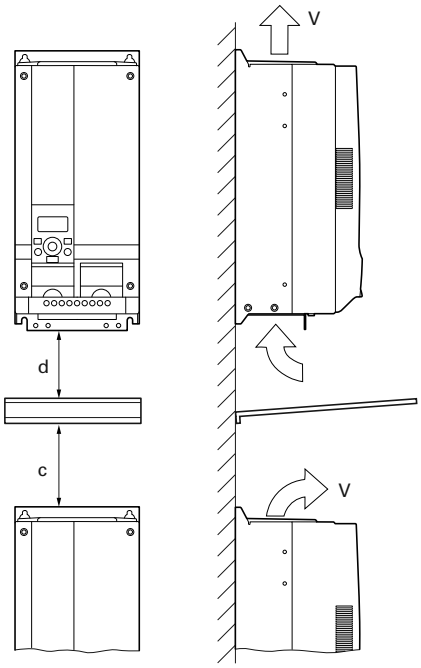

Fixing

You can mount an M-Max frequency inverter on screw mounts or on a mounting rail.

Install the frequency inverter only on a nonflammable mounting base (for example, on a metal plate).

Dimensions and weights of the M-Max frequency inverter are located in the appendix.

Fastening with Screws (FS1–FS5)

The number and arrangement of required bore holes (mounting dimensions a1 and b1 shown in the figure below) are also imprinted in the base plate of the M-Max device, FS1–FS3.

Mounting Dimensions

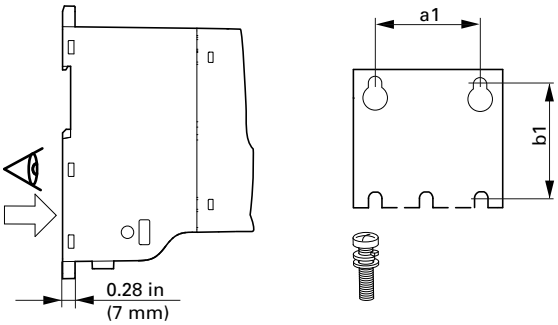

Install the screws in the specified positions first. Then set the frequency inverter on the prepared wall-mount and tighten all screws.

Configuration for Mounting with Screws

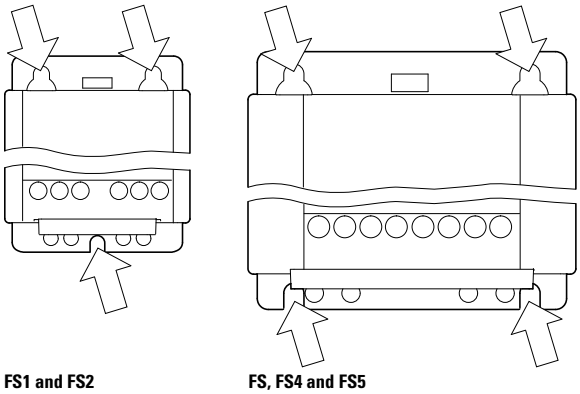

	a1 mm [in]	b1 mm [in]	Mass kg [lb]	Torque Nm [ft-lb]	Mounting Screw
FS1	38 [1.5]	147 [5.79]	0.55 [1.2]	1.3 [0.95]	M4
FS2	62.5 [2.46]	182 [7.17]	0.7 [1.5]	1.3 [0.95]	M4
FS3	75 [2.95]	242 [9.53]	0.99 [2.2]	1.3 [0.95]	M5
FS4	140 [5.51]	351 [13.82]	8 [18.0]	4.6 [3.4]	M6
FS5	140 [5.51]	398 [13.82]	10 [22.0]	4.6 [3.4]	M6

Fastening on Mounting Rails (FS1–FS3)

As an alternative, you can also fasten FS1–FS3 to a mounting rail conforming with IEC/EN 60715.

Mounting Rail Conforming with IEC/EN 60715

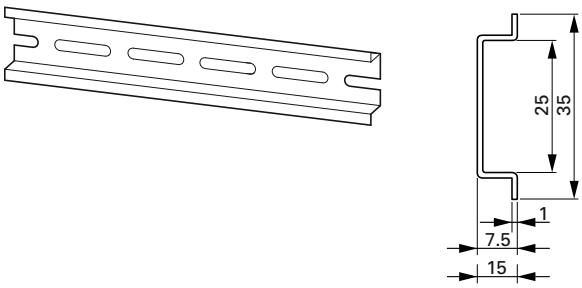

Set the frequency inverter onto the mounting rail **[1]** from above and press until it rests in place **[2]**.

Fastening to the Mounting Rail

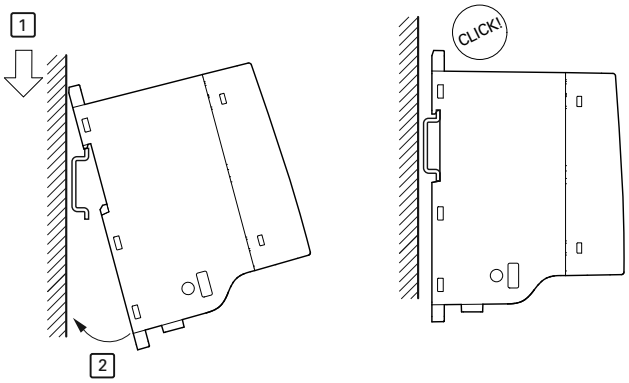

Dismantling from Mounting Rails

To remove the device, push the spring-loaded clip down. A marked cutout is provided on the upper edge of the M-Max device. A flat-bladed screwdriver (blade width 0.20 in [5 mm]) is recommended for pushing the clip down.

Demounting

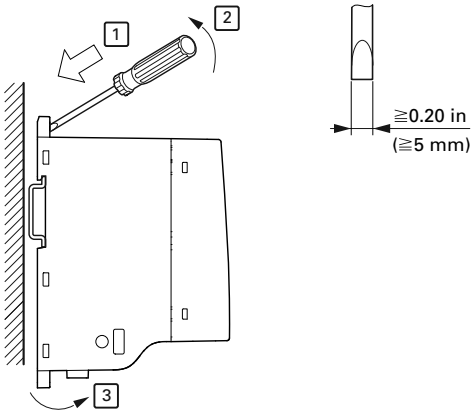

Cable Flange Plate (Accessories)

The M-Max is supplied with a cable routing plate and brackets. These enable you to arrange the connection cables as required on the frequency inverter and fasten the shielded cables in accordance with EMC requirements.

First, install the cable clamp plate for the connection lines in the power section **[1]** and then the cable clamping plate **[2]** for the control lines. The required installation screws (M4) are included as standard.
[3] = gland plates in the power section.

Mount the cable routing plate before the electrical installation.

Mounting the Cable Routing Plate and the Brackets

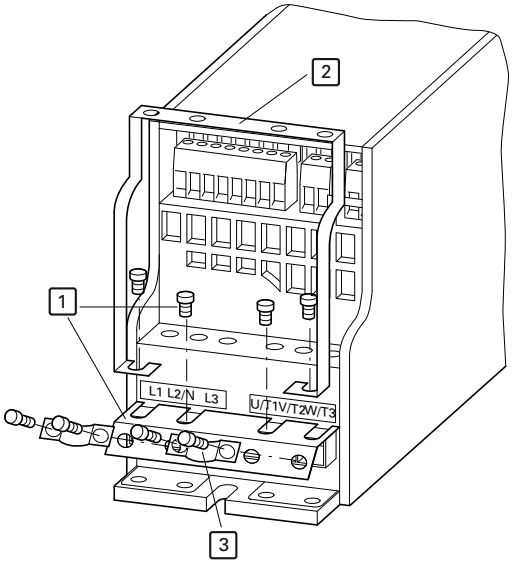

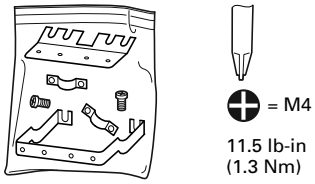

EMC Installation

The responsibility to comply with the legally stipulated limit values and thus the provision of electromagnetic compatibility is the responsibility of the end user or system operator. This operator must also take measures to minimize or remove emissions in the environment concerned (see figure on **Page 22**). He must also use means to increase the interference immunity of the system devices.

In a drive system (PDS) with frequency inverters, you should take measures for electromagnetic compatibility (EMC) while doing your planning, because changes or improvements to the installation site, which are required in the installation or while mounting, are normally associated with additional higher costs.

The technology and system of a frequency inverter cause the flow of high frequency leakage current during operation. All grounding measures must therefore be implemented with low impedance connections over a large surface area.

With leakage currents greater than 3.5 mA, in accordance with VDE 0160 or EN 60335, either

- the protective conductor must have a cross-section ≧10 mm^2
- the protective conductor must be open-circuit monitored, or
- the second protective conductor must be fitted

For an EMC-compliant installation, we recommend the following measures:

- Installation of the frequency inverter in a metallic, electrically conducting enclosure with a good connection to earth
- Shielded motor cables (short cable lengths)

Ground all conductive components and housings in a drive system using as short a line as possible with the greatest possible cross-section (Cu-braid).

EMC Measures in the Control Panel

For EMC-compatible installation, connect all metallic parts of the device and the switching cabinet together over broad surfaces and so that high-frequencies will be conducted. Mounting plates and cabinet doors should make good contact and be connected with short HF-braided cables. Avoid using painted surfaces (anodized, chromized). An overview of all EMC measures is provided in the figure on **Page 31**.

Install the frequency inverter as directly as possible (without spacers) on a metal plate (mounting plate).

Route input and motor cables in the switch cabinet as close to the ground potential as possible. This is because free moving cables act as antennas.

When laying HF cables (for example, shielded motor cables) or suppressed cables (for example, input supply cables, control circuit and signal cables) in parallel, a minimum clearance of 11.81 in (300 mm) should be ensured in order to prevent the radiation of electromagnetic energy. Separate cable routing should also be ensured when large voltage potential differences are involved. Any necessary crossed cabling between the control signal and power cables should always be implemented at right angles (90 degrees).

Never lay control or signal cables in the same duct as power cables. Analog signal cables (measured, reference and correction values) must be shielded.

Earthing

The ground connection (PE) in the cabinet should be connected from the input supply to a central earth point (mounting plate). All protective conductors should be routed in star formation from this earth point and all conductive components of the PDS (frequency inverter, motor reactor, motor filter, main choke) are to be connected.

Avoid ground loops when installing multiple frequency inverters in one cabinet. Make sure that all metallic devices that are to be grounded have a broad area connection with the mounting plate.

Screen Earth Kit

Cables that are not shielded work like antennas (sending, receiving). Make sure that any cables that may carry disruptive signals (for example, motor cables) and sensitive cables (analog signal and measurement values) are shielded apart from one another with EMC-compatible connections.

The effectiveness of the cable shield depends on a good shield connection and a low shield impedance.

Use only shields with tinned or nickel-plated copper braiding. Braided steel shields are unsuitable.

Control and signal lines (analog, digital) should always be grounded on one end, in the immediate vicinity of the supply voltage source (PES).

EMC-Compliant Setup (Example: M-Max)

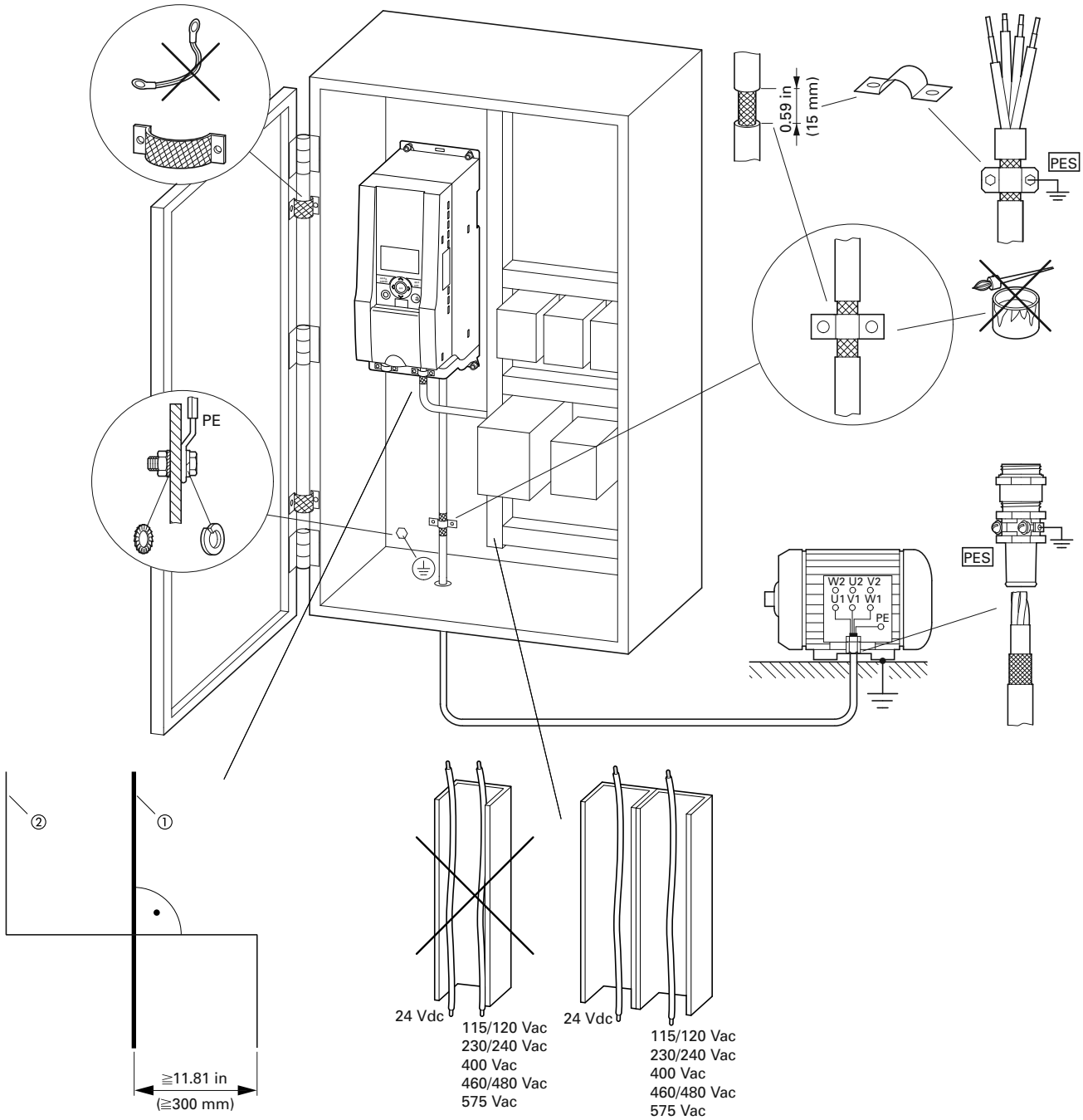

Notes

① Power cable: L1, L2/N, L3 and U/T1, V/T2, W/T3, R+, R–

② Control and signal lines: 1 to 26, A, B, fieldbus connection

Large-area connection of all metallic control panel components.

Mounting surfaces of frequency inverter and cable shielding must be free from paint.

Connect the cable shielding in the output of the frequency inverter with a large surface area contact to the ground potential (PES).

Large-area cable shield contacts with motor.

Large-area earth connection of all metallic parts.

Electrical Installation

WARNING

Carry out wiring work only after the frequency inverter has been correctly mounted and secured.

WARNING

Electric shock hazard—risk of injuries!

Carry out wiring work only if the unit is de-energized.

CAUTION

Debounced inputs may not be used in the safety circuit diagram.

Fire hazard!

Only use cables, protective switches, and contactors that feature the indicated permissible nominal current value.

CAUTION

Debounced inputs may not be used in the safety circuit diagram.

Ground contact currents in frequency inverters are greater than 3.5 mA (AC). According to product standard IEC/EN 61800-5-1, an additional equipment grounding conductor must be connected, or the cross-section of the equipment grounding conductor must be at least 0.39 in^2 (10 mm^2).

WARNING

The components in the frequency inverter's power section remain energized up to five (5) minutes after the supply voltage has been switched off (intermediate circuit capacitor discharging time).

Pay attention to hazard warnings!

DANGER
5 MIN

Note: Complete the following steps with the specified tools and without using force.

Connection to Power Section

The following figure shows the general connections for the frequency inverter in the power section.

Three-Phase Input Connection

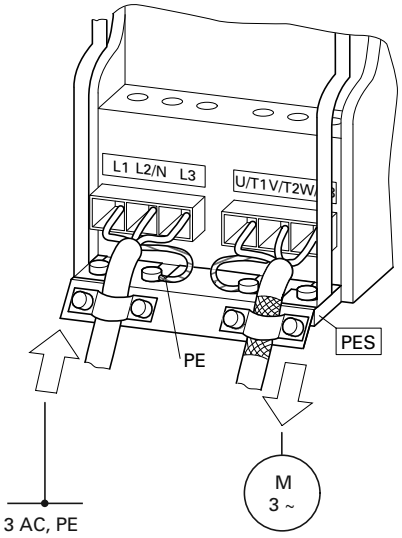

Terminal Designations in the Power Section

- L1, L2/N, L3: Connection terminals for the supply voltage (input, input voltage):
  - Single-phase AC voltage: connection to L2/N and L3 on MMX11_
  - Single phase AC voltage: Connection to L1 and L2/N with MMX12_
  - Three-phase AC voltage: Connection to: L1, L2/, L3 with MMX32_, MMX34_ and MMX35_.
- U/T1, V/T2, W/T3: Connection terminals for the three-phase line to the AC motor (output, frequency inverter)
- ⏚ PE: connection for protective ground (reference potential). PES with mounted cable routing plate for shielded cables
- R+, R–: Connection terminals for external brake resistance (only with MMX32_, MMX34_ and MMX35_, output braking transistor)

Connection to Power Section

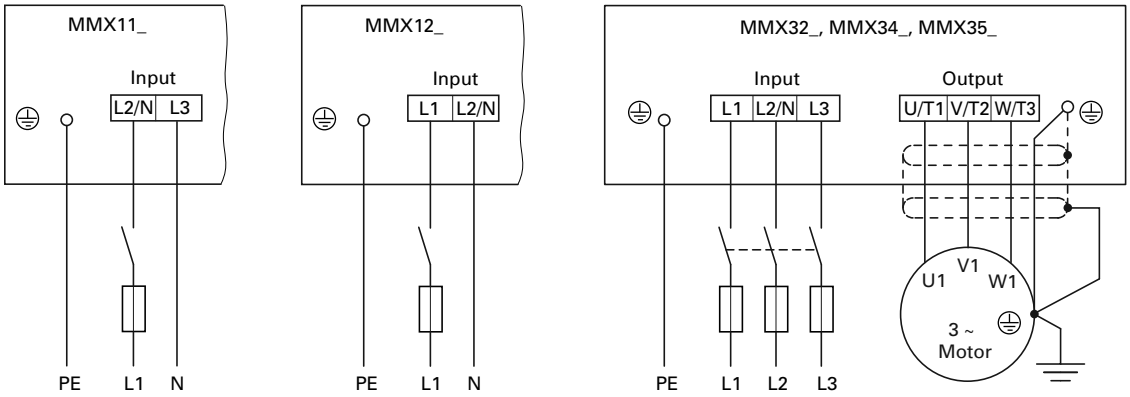

Ground Connection

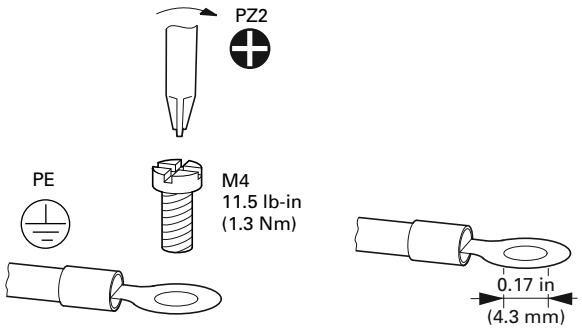

The ground connection is connected directly with the cable clamp plates.

The shielded cables between the frequency inverter and the motor should be as short as possible. Connect the shielding on both ends and over a large surface area with protective ground PES (Protective Earth Shielding). You can connect the shielding of the motor cable directly to the cable clamp plate (360 degrees coverage) with the protective ground.

The frequency inverter must always be connected to the ground potential via a grounding cable (PE).

Connection in Power Section

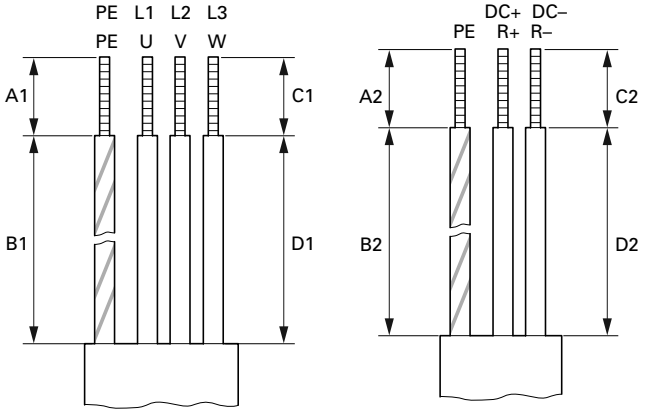

Stripping Lengths in the Power Section in inches (mm)

	Supply Voltage (Input)				Motor (Output)				DC-Link, Brake Resistor			
	L1, L2, L3		PE ⏚		U/T1, V/T2, W/T3		PE ⏚		DC+/R+, R–, DC–		PE ⏚	
	C1	D1	A1	B1	C1	D1	A1	B1	C2	D2	A2	B2
FS1	0.30 (8.0)	0.80 (20.0)	0.30 (8.0)	1.40 (35.0)	0.30 (8.0)	0.80 (20.0)	0.30 (8.0)	1.40 (35.0)	0.30 (8.0)	0.80 (20.0)	0.30 (8.0)	1.40 (35.0)
FS2	0.30 (8.0)	0.80 (20.0)	0.30 (8.0)	1.40 (35.0)	0.30 (8.0)	0.80 (20.0)	0.30 (8.0)	1.40 (35.0)	0.30 (8.0)	0.80 (20.0)	0.30 (8.0)	1.40 (35.0)
FS3	0.30 (8.0)	0.80 (20.0)	0.30 (8.0)	1.40 (35.0)	0.30 (8.0)	0.80 (20.0)	0.30 (8.0)	1.40 (35.0)	0.30 (8.0)	0.80 (20.0)	0.30 (8.0)	1.40 (35.0)
FS4	0.30 (8.0)	1.60 (40.0)	0.30 (8.0)	1.20 (30.0)	0.30 (8.0)	2.00 (50.0)	0.30 (8.0)	1.20 (30.0)	0.30 (8.0)	1.60 (40.0)	0.30 (8.0)	1.60 (40.0)
FS5	0.30 (8.0)	1.60 (40.0)	0.30 (8.0)	1.20 (30.0)	0.30 (8.0)	2.00 (50.0)	0.30 (8.0)	1.20 (30.0)	0.30 (8.0)	2.00 (50.0)	0.30 (8.0)	2.00 (50.0)

Prevent the shielding from becoming unbraided, for example, by pushing the separated plastic covering over the end of the shielding or with a rubber grommet on the end of the shielding. As an alternative, in addition to a broad area cable clip, you can also twist the shielding braid at the end and connect to protective ground with a cable clip. To prevent EMC disturbance, this twisted shielding connection should be made as short as possible (see figure below).

Screened Connection Cable

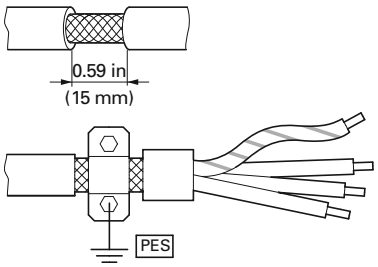

Shielded, four-wire cable is recommended for the motor cables. The green-yellow line of this cable connects the protective ground connections from the motor and the frequency inverter and therefore minimizes the equalizing current loads on the shielding braid.

Connection with Twisted Cable Shielding
(Recommended value for twisted cable shielding: b ≧1/5 a)

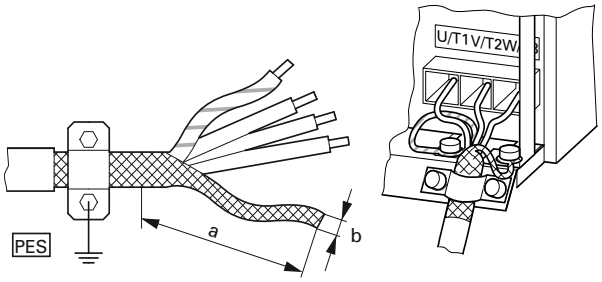

Twisted shielding braid should be connected with a ring cable terminal (see figure on **Page 33**) on PES.

The following figure shows the construction of a four-wire, shielded motor line (recommended specifications).

Four-Core Shielded Motor Supply Cable

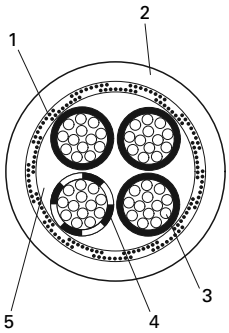

Item Number	Description
1	Cu shield braid
2	PVC outer sheath
3	Drain wire (copper strands)
4	PVC core insulation, 3 x black, 1 x green–yellow
5	Textile and PVC fillers

If there are additional subassemblies in a motor circuit (for example, motor contactors, relays, motor reactor, sinusoidal filters, or terminals), interrupt the shielding of the motor cable in the vicinity of these subassemblies. Connect this over a broad surface area with the mounting plate (PES). Free or non-shielded connection cables should not be any longer than about 11.81 in (300 mm).

Arrangement and Connection of the Power Terminals

The arrangement and size of the connection terminals depends on the construction of the power section (FS1, FS2, FS3).

The cross-sections to use in the connections, the tightening torques for screws and respective fuses are listed in the following table.

Arrangement and Size of the Connection Terminals

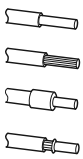

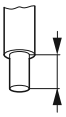

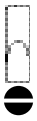

	Part Numbers	mm²	AWG	mm	in	Nm	ft-lbs	mm	Terminal Configuration
FS1	MMX12AA1D7_ MMX12AA2D4_ MMX12AA2D8_	0.2–2.5	24–12	8	0.31	0.5–0.6	0.37–0.44	0.6 x 3.5	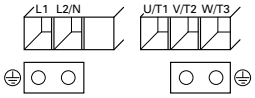
	MMX32AA1D7_ MMX32AA2D4_ MMX32AA2D8_	0.2–2.5	24–12	8	0.31	0.5–0.6	0.37–0.44	0.6 x 3.5	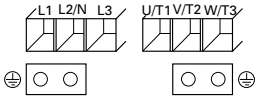
	MMX34AA1D3_ MMX34AA1D9_ MMX34AA2D4_	0.2–2.5	24–12	8	0.31	0.5–0.6	0.37–0.44	0.6 x 3.5	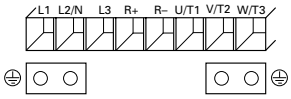
FS2	MMX11AA1D7_ MMX11AA2D4_ MMX11AA2D8_ MMX11AA3D7_	0.2–2.5	24–12	8	0.31	0.5–0.6	0.37–0.44	0.6 x 3.5	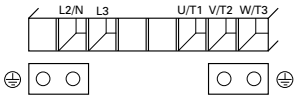
	MMX12AA3D7_ MMX12AA4D8_ MMX12AA7D0_	0.2–2.5	24–12	8	0.31	0.5–0.6	0.37–0.44	0.6 x 3.5	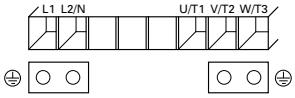
	MMX32AA3D7_ MMX32AA4D8_ MMX32AA7D0_	0.2–2.5	24–12	8	0.31	0.5–0.6	0.37–0.44	0.6 x 3.5	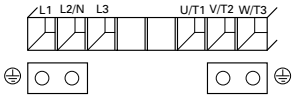
	MMX34AA3D3_ MMX34AA4D3_ MMX34AA5D6_	0.2–2.5	24–12	8	0.31	0.5–0.6	0.37–0.44	0.6 x 3.5	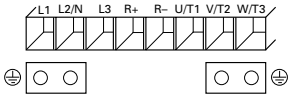

Arrangement and Size of the Connection Terminals, continued

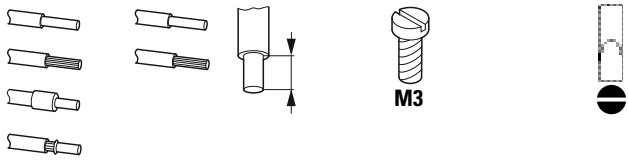

	Part Numbers	mm^2	AWG	mm	in	Nm	ft-lbs	mm	Terminal Configuration
FS3	MMX11AA4D8_	0.2–4	24–10	8	0.31	0.5–0.6	0.37–0.44	0.6 x 3.5	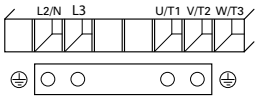
	MMX12AA9D6_	0.2–4	24–10	8	0.31	0.5–0.6	0.37–0.44	0.6 x 3.5	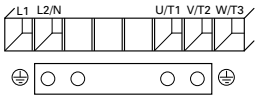
	MMX32AA011_	0.2–4	24–10	8	0.31	0.5–0.6	0.37–0.44	0.6 x 3.5	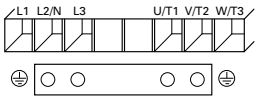
	MMX34AA7D6_ MMX34AA9D0_ MMX34AA012_ MMX34AA014_	0.2–4	24–10	8	0.31	0.5–0.6	0.37–0.44	0.6 x 3.5	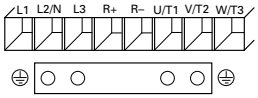
FS4	MMX32AA017_ MMX32AA025_	0.5–16	20–6	8	0.39	1.2–1.5	0.88–1.11	0.6 x 3.5	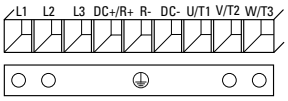
	MMX34AA016_ MMX34AA023_	0.5–16	20–6	8	0.39	1.2–1.5	0.88–1.11	0.6 x 3.5	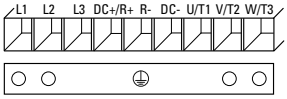
FS5	MMX32AA031_ MMX32AA038_	0.5–16	20–6	8	0.39	1.2–1.5	0.88–1.11	0.6 x 3.5	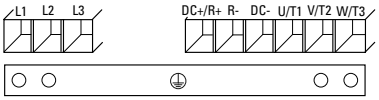
	MMX34AA031_ MMX34AA038_	0.5–16	20–6	8	0.39	1.2–1.5	0.88–1.11	0.6 x 3.5	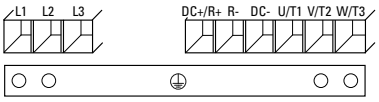

Connection on Control Section

The control signal terminals are arranged under the front cover flap.

Position of Control Signal Terminals

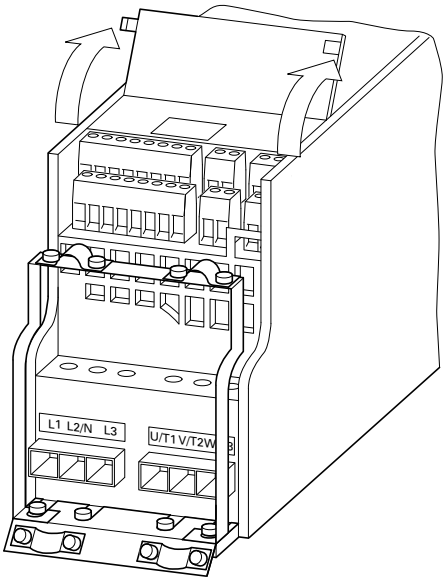

The cable hold down clamps contained in the scope of delivery can be mounted on the cable clamp plate of the power section.

The control lines should be shielded and twisted. The shielding is exposed on one side (PES), on the cable hold down clamps on the frequency inverter for instance.

Prevent the shielding from becoming unbraided, for example, by pushing the separated plastic covering over the end of the shielding or with a rubber grommet on the end of the shielding.

Prevent the Shield from Becoming Unbraided

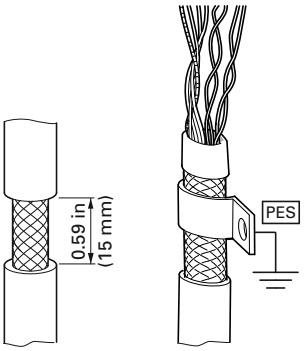

As an alternative, in addition to a broad area cable clip, you can also twist the shielding braid at the end and connect to protective ground with a cable clip. To prevent EMC disturbance, this twisted shielding connection should be made as short as possible (see figure on **Page 35**).

Example for a Single-Side Connection (PES) to the Frequency Inverter

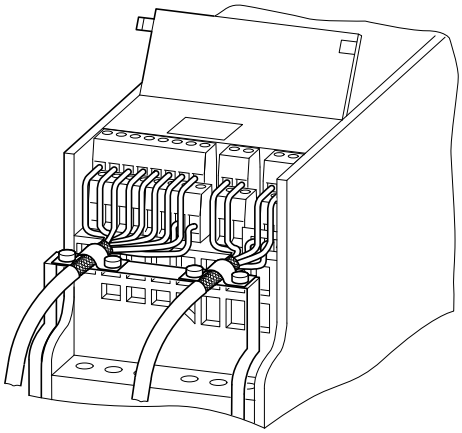

Prevent any unraveling on the other end of the control line with a rubber grommet. The shielding braid is not to make any connection with protective ground here because this would cause problems with an interference loop.

Example for an Insulated End of the Control Cable

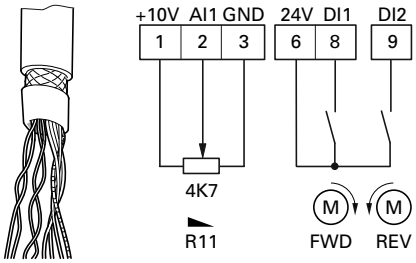

Control Signal Terminals Arrangement and Connections

ESD Measures

WARNING

Discharge yourself on a grounded surface before touching the control signal terminals and the controller PCB. This protects the device from destruction by electrostatic discharge.

The following figure shows the arrangement and designation of M-Max control signal terminals.

Control Signal Terminals Assignments and Designations

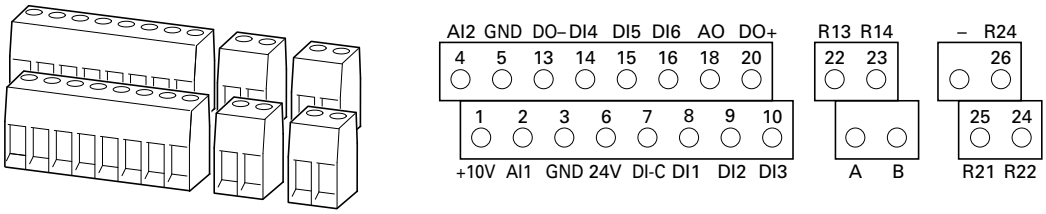

Possible Connection Line Sizes and Specifications on Control Signal Terminals

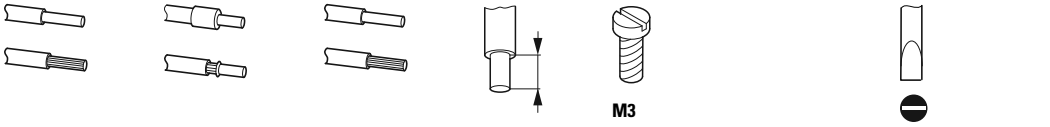

mm^2	mm^2	AWG	mm	Nm	ft-lbs	mm
0.14–1.5	0.25–0.5	26–16	5	0.22–0.25	0.16–0.18	0.4 x 2.5

Microswitches and Control Signal Terminals

Four microswitches are arranged under the cover plate. These are used to directly configure the control signal terminals.

Microswitch Factory Settings

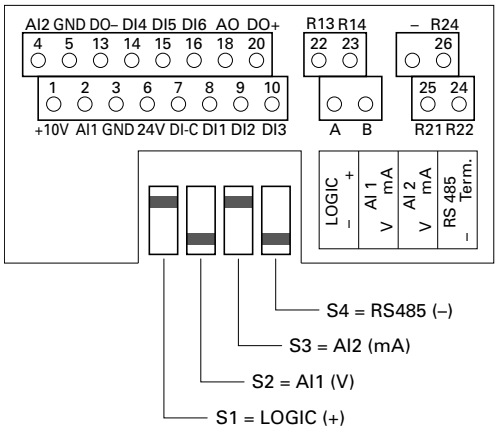

Microswitch Description

S1	LOGIC	Control logic: + = Positive logic (FS) Source type – = Negative logic Sink type
S2	AI1	Analog input 1 (P2.1): V = 0–10V (FS) mA = 4–20 mA
S3	AI2	Analog input 2 (P2.5): mA = 4–20 mA (FS) V = 0 –10V
S4	RS485	Bus terminating resistor (control signal terminal A/B): – = Disconnected Term. = Switched on (terminator)

Control Signal Terminal Functions

The functions that are set in the ex-factory and the electrical connection data of all control signal terminals are listed in the following table.

Factory-Set Control Terminal Functions

Terminal		Signal	Factory setting	Description
1	+10V	Output nominal voltage	—	Maximum load 10 mA, reference potential GND
2	AI1	Analog signal input 1	Frequency reference value ①	0–10V (R_i >200k ohms) 0/4–20 mA (R_B = 200 ohms) Selectable through microswitch S2
3	GND	Reference potential	—	0V
4	AI2	Analog input 2	PID controller, actual value ①	0–10V (R_i >200k ohms) 0/4–20 mA (R_B = 200 ohms) Selectable through microswitch S3
5	GND	Reference potential	—	0V
6	24V	Control voltage for DI1–DI6, output (+24V)	—	Maximum load 50 mA, reference potential GND
7	DI-C	Reference potential of the digital inputs DI1–DI6	LOGIC- (GND)	Selectable through microswitch LOGIC –/+
8	DI1	Digital input 1	FWD start enable, forward ①	0–30V (R_i >12k ohms)
9	DI2	Digital input 2	REV start enable, reverse ①	0–30V (R_i >12k ohms)
10	DI3	Digital input 3	Fixed frequency B0 ①	0–30V (R_i >12k ohms)
13	DO–	Digital output	Active = READY ①	Transistor, max. 50 mA, supply voltage control signal terminal 20
14	DI4	Digital input 4	Fixed frequency B1 ①	0–30V (R_i = 12k ohms)
15	DI5	Digital input 5	Error acknowledgment ①	0–30V (R_i = 12k ohms)
16	DI6	Digital input 6	PI controller deactivated ①	0–30V (R_i = 12k ohms)
18	AO	Analog output	Output frequency ①	0–10V, max. 10 mA
20	DO+	Digital output	Supply voltage, see control signal terminal 13	Supply voltage for digital output DO max. 48 Vdc, max. 50 mA
22	R13	Relay 1, normally open contact	Active = RUN ①	Maximum switching load: 250 Vac/2A or 250 Vdc/0.4A
23	R14	Relay 1, normally open contact	Active = RUN ①	Maximum switching load: 250 Vac/2A or 250 Vdc/0.4A
24	R22	Relay 2, changeover contact (N/C)	Active = FAULT ①	Maximum switching load: 250 Vac/2A or 250 Vdc/0.4A
25	R21	Relay 2, changeover contact	Active = FAULT ①	Maximum switching load: 250 Vac/2A or 250 Vdc/0.4A
26	R24	Relay 2, changeover contact (N/O)	Active = FAULT ①	Maximum switching load: 250 Vac/2A or 250 Vdc/0.4A
A	A	RS485 signal A	BUS-communication	Modbus RTU
B	B	RS485 signal B	BUS-communication	Modbus RTU

Note

① Programmable function (see "List of Parameters" on **Page 161**).

Analog Inputs

Connection area of the analog and digital inputs and outputs.

Control Signal Terminals (Digital and Analog Inputs/Outputs)

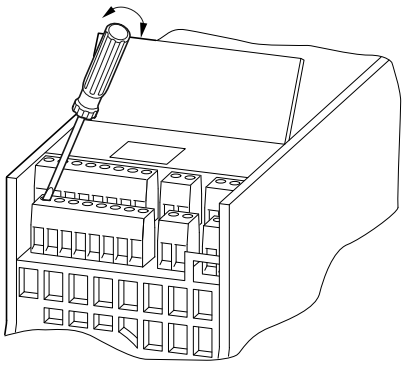

The M-Max frequency inverter has two analog inputs for specifying the frequency setpoint value and the actual value return to the PI controller:

- Control signal terminal 2 (AI1), voltage signal 0 (2)–10V, input resistance 200k ohms
- Control signal terminal 4 (AI2), current signal 0 (4)–20 mA, Load resistance 200 ohms

Adjusting and the parameter definition of analog inputs are described in "Analog Input (P2)" on **Page 68**.

The AI1 analog input (control signal terminal 2) is factory set for the frequency setpoint (P6.2). The setpoint can be input via an external potentiometer (recommended fixed resistance: 1–10k ohms). The fixed resistance of the setpoint potentiometer is fed from the frequency inverter via control signal terminal 1 with +10V (maximum load rating: 10 mA). Control signal terminals 3 and 5 are reference points (GND) for the analog setpoint signals.

Analog Setpoint Inputs AI1 and AI2

Connection example: Potentiometer (4.7k ohms) M22-R4K7; Article No. 229490

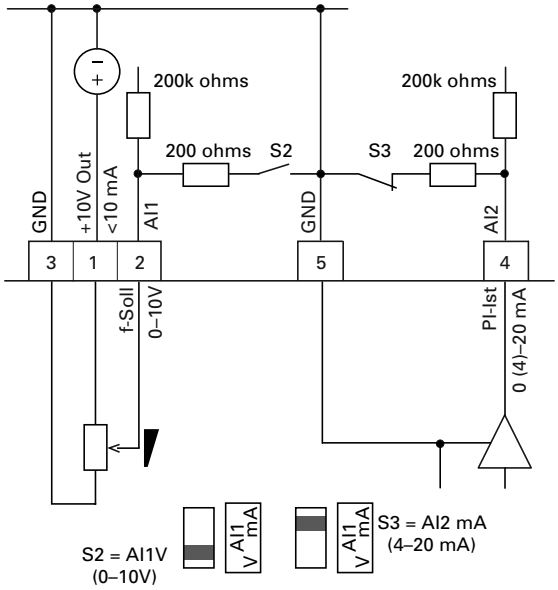

Analog Setpoint Value Signal, for Example, from a Superordinate Controller (PLC)

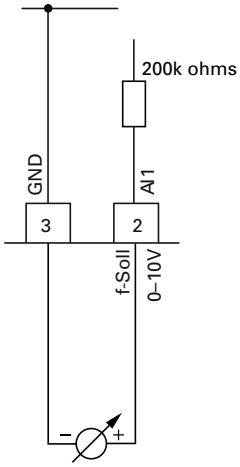

Analog Outputs

The frequency inverter provides an analog voltage signal (0–10V) at control signal terminal 18. This signal is factory set proportional to the output frequency (0–f_{max}). The calibration and parameterization of the analog output are described in "Analog Outputs (P4)" on **Page 77**.

Analog Output AO (Connection Examples)

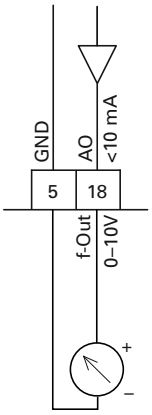

Digital Inputs

The frequency inverter has six digital inputs (DI1 to DI6) that have an identical function and operation. Their actuation is factory set for +24V (positive logic, source type). You can use the device internal control voltage of control signal terminal 6 (+24V, maximal 50 mA) or an external voltage source (+24V) with a residual ripple less than ±5% $\triangle U_a/U_a$. The parameterizable functions are described in "Digital Inputs (P3)" on **Page 71**.

Digital Inputs with Internal Supply Voltage

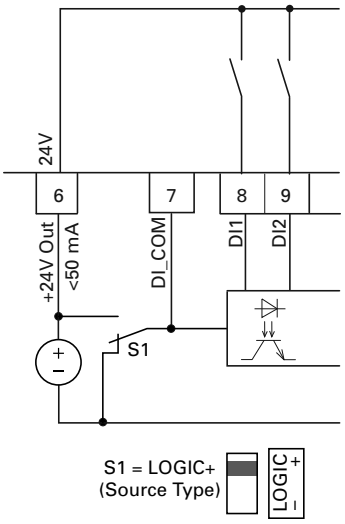

Digital Inputs with External Supply Voltage

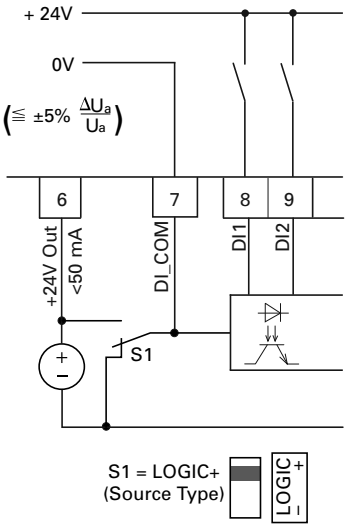

The factory set functions and the electrical connection data are shown in "Control Signal Terminal Functions" on **Page 40**.

Microswitch S1 (LOGIC) is used to change the control logic to so-called negative logic (sink type). The digital inputs are connected internally or externally via control signal terminal 7 (DI_COM) directly to +24V and to the corresponding 0V potential (GND) via input terminals DI1 to DI6.

Digital Inputs with Internal Supply Voltage (Negative Logic, Sink Type)

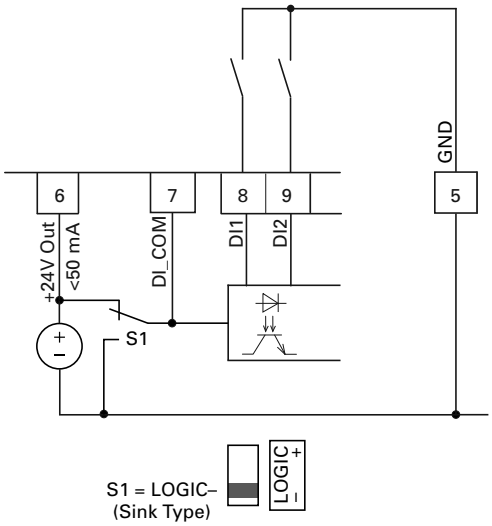

Digital Inputs with External Supply Voltage (Negative Logic, Sink Type)

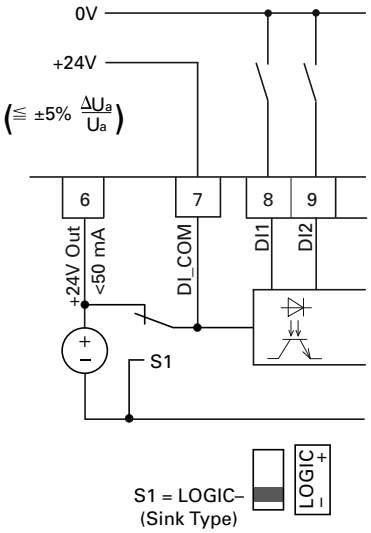

Digital Outputs (Transistor)

The transistor output (control signal terminal 13, DO–) can be supplied with the internal control voltage (+24V) via control signal terminal 20 (DO+) or with an external DC voltage of up to +48V. The permissible residual ripple must be less than ±5% $\triangle U_a/U_a$. The maximum permissible load current is 50 mA.

Digital Output DO and Connection Examples
(Coupling Relay with Freewheeling Diode: ETS4-VS3; Item No. 083094)

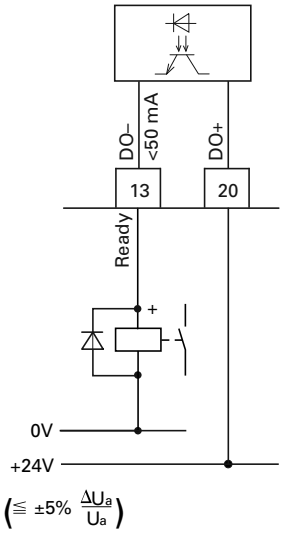

Connection Example and Operation of DO in Source and Sink Type

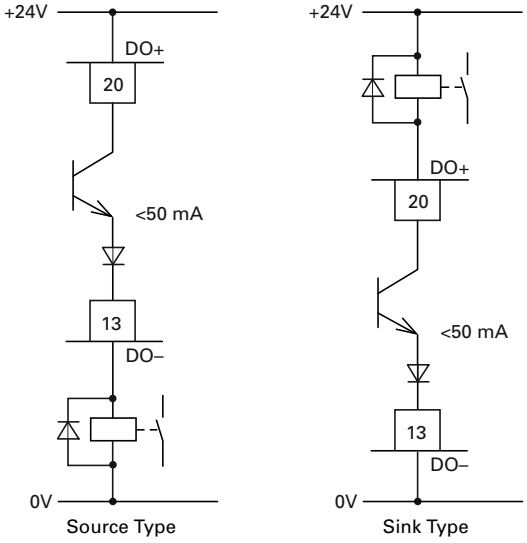

The parameter assignment is described in "Digital Outputs (P5)" on **Page 78**.

Digital Outputs (Relays)

The following figure shows the arrangement of the connection terminals for both relay contacts.

Relay Outputs with Connection Examples, Control Relay with Suppressor Circuit

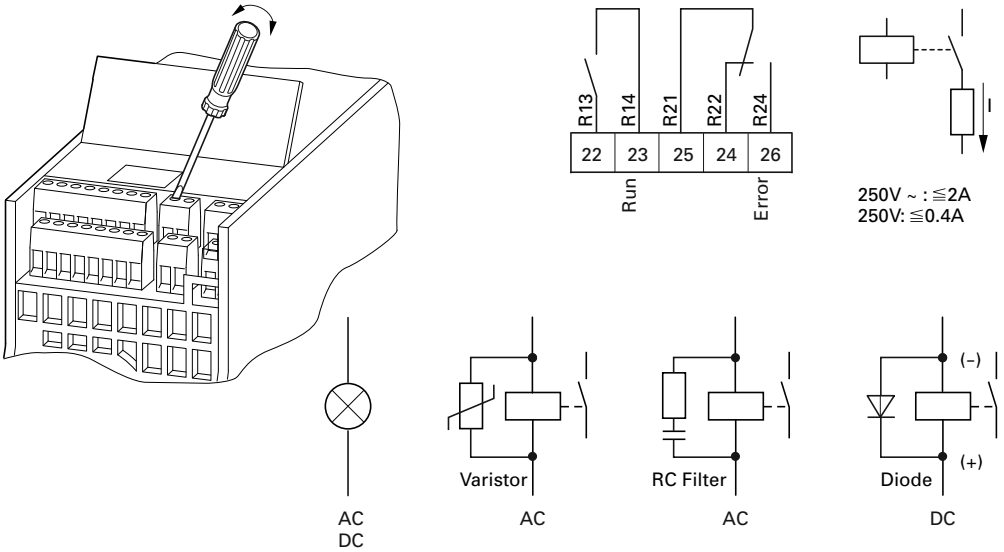

The two relay outputs (control signal terminals 22 to 26) enable the frequency inverter to generate galvanically isolated feedback signals in control circuits with other potentials:

- maximum switching capacity: 250 Vdc, 0.4A (DC voltage),
- maximum switching capacity: 250 Vac, 2A (AC voltage).

With voltages greater than 48V, you should fasten the connection cables of the relay in the opening on the right (housing).

Fixed Connection Cables at U >48V (Relay)

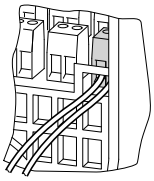

The functions for which parameters can be defined are described in "Digital Outputs (P5)" on **Page 78**.

The factory setting causes N/O contact R13/R14 (control signal terminal 22/23) of relay RO1 to indicate operation (RUN).

N/O contact R21/R24 (control signal terminal 25/26) of relay RO2 indicates a detected fault (ERROR = FAULT).

If the supply voltage of the frequency inverter is switched off upon the occurrence of an error message, the N/O R21/R24 opens again (relay drops out).

The functions for which parameters can be defined for both relays RO1 and RO2 are described in "Digital Outputs (P5)" on **Page 78**.

Serial Interface A-B

The following figure shows the connections of the serial interface and the position of the micro-switch for the bus termination resistor.

Connection Terminals of the Serial Interface and Microswitch S4 (Bus Terminating Resistor)

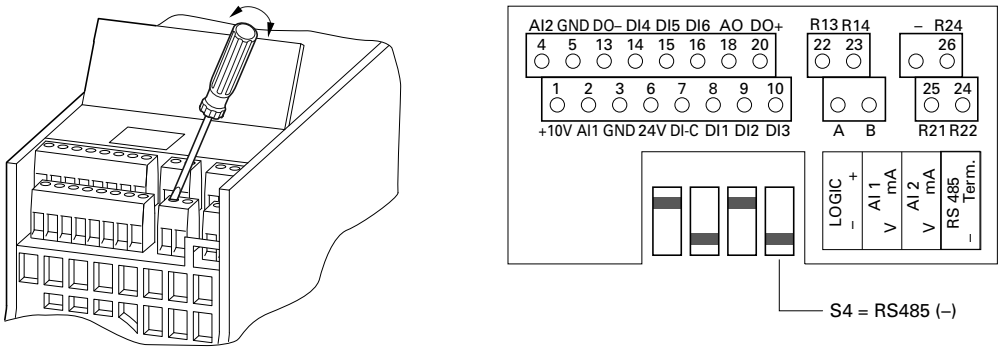

The two control signal terminals A and B enable the connection of a shielded RS485 twisted-pair cable.

The bus terminating resistor required at the end of a data cable is integrated in the frequency inverter and can be connected via microswitch S4.

The network cable must have a bus termination resistor (120 ohms) connected at each physical end to prevent reflections and the resulting transmission faults.

Two-Wire RS485 Connection
(Slave = M-Max Frequency Inverter)

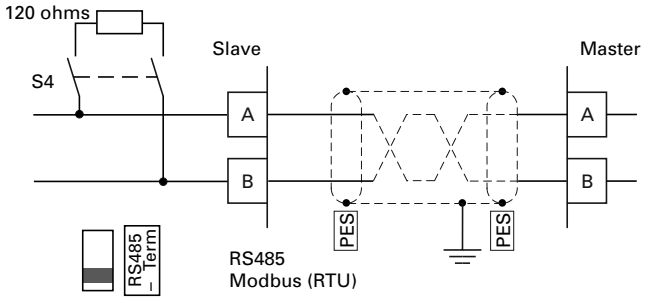

The parameter definition of the serial interface is described in "Serial Interface (Modbus RTU)" on **Page 131**.

Block Diagrams

The following diagrams show all the terminals on an M-Max frequency inverter and their functions at the default settings.

MMX11...N_ Block Diagram

MMX11 has a voltage doubler circuit inside the internal DC link. A power supply of 1 AC 120V (115V) will output a motor voltage of 3 AC 230V.

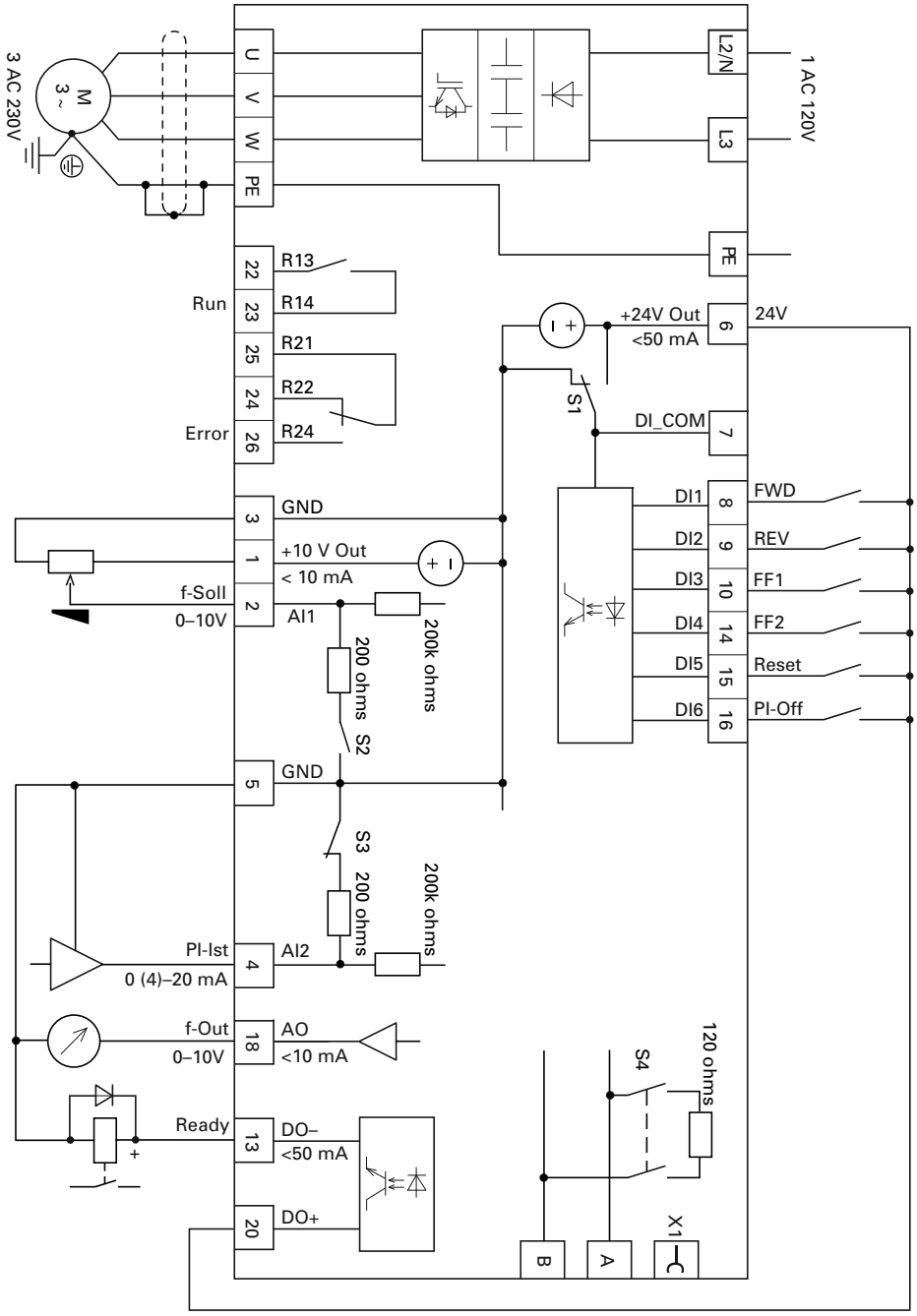

MMX12...F_ Block Diagram

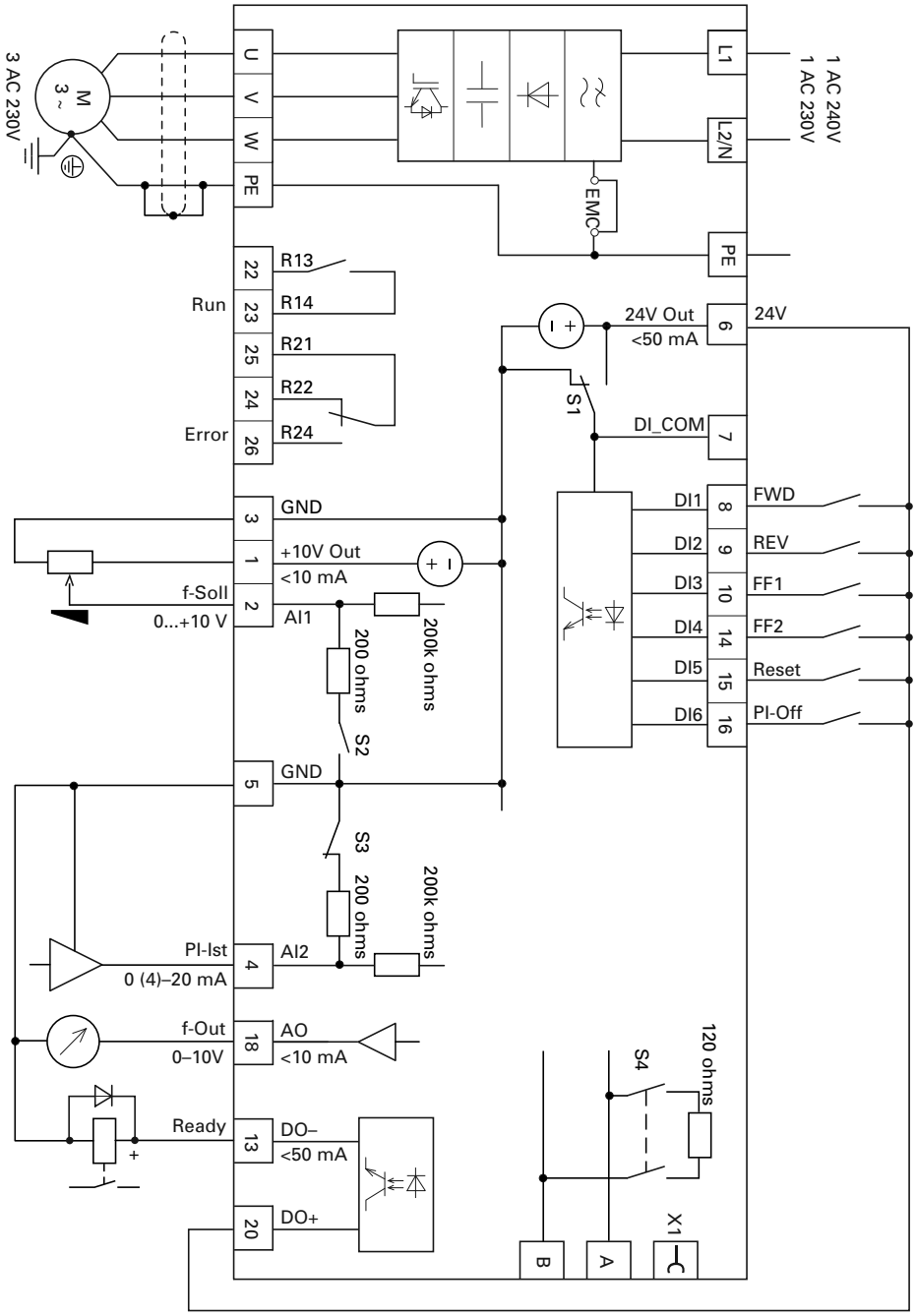

MMX32, MMX34 and MMX35 Block Diagram

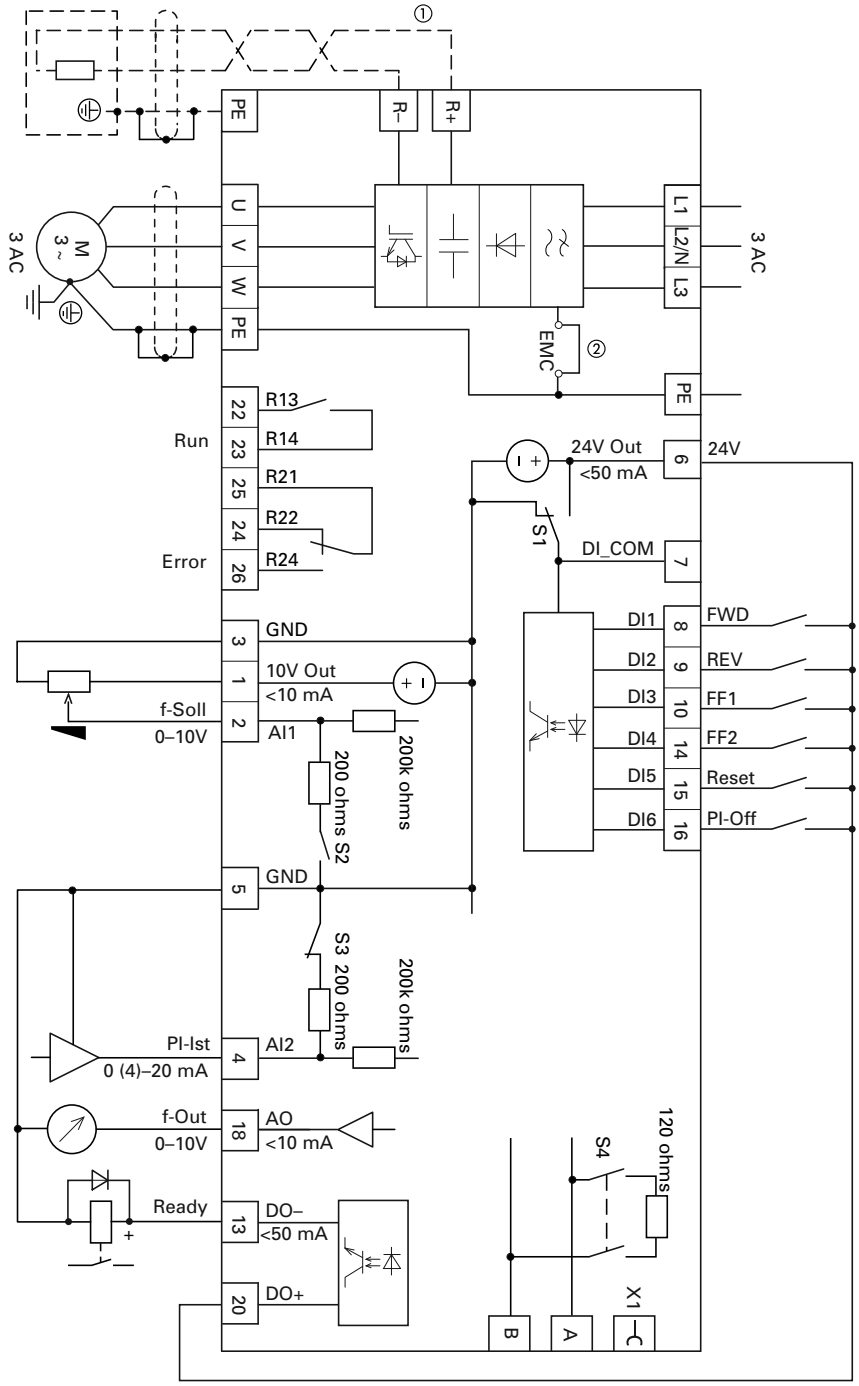

Notes

① External brake resistor terminals R+ and R– are only available on three-phase FS2 and FS3 drives.

② EMC filter only available on MMX34… units.

Insulation Testing

The M-Max series frequency inverters are tested, delivered and require no additional testing.

WARNING

On the control signal and the connection terminals of the frequency inverter, no leakage resistance tests are to be performed with an insulation tester.

WARNING

Wait at least 5 minutes after switching the supply voltage off before you disconnect a connection on the connection terminals (L1, L2/N, L3, U/T1, V/T2, W/T3, R+, R–) of the frequency inverter.

If insulation testing is required in the power circuit of the PDS, you must consider the following measures.

Testing the Motor Cable Insulation

Disconnect the motor cable from connection terminals U/T1, V/T2 and W/T3 of the frequency inverter and from the motor (U, V, W). Measure the insulation resistance of the motor cable between the individual phase conductors and between the phase conductor and the protective conductor.

The insulation resistance must be greater than 1M ohm.

Testing the Input Cable Insulation

Disconnect the power cable from the input supply network and from connection terminals L1, L2/N and L3 of the frequency inverter. Measure the insulation resistance of the input cable between the individual phase conductors and between each phase conductor and the protective conductor.

The insulation resistance must be greater than 1M ohm.

Testing the Motor Insulation

Disconnect the motor cable from the motor (U, V, W) and open the bridge circuits (star or delta) in the motor terminal box. Measure the insulation resistance of the individual motor windings. The measurement voltage must at least match the rated voltage of the motor but is not to exceed 1000V.

The insulation resistance must be greater than 1M ohm.

Consider the information from the motor manufacturer in testing the insulation resistance.

Operation

Commissioning Checklist

Before placing the frequency converter into operation, make sure to check the following:

No.	Activity	Completed	Notes
1	Installation and wiring have been carried out in accordance with the corresponding instructional leaflet (AWA8230-2416)	☐	
2	All wiring and line section leftovers, as well as all the tools used, have been removed from the frequency inverter's proximity	☐	
3	All terminals in the power section and in the control section were tightened with the specified torque	☐	
4	The lines connected to the output terminals of the frequency inverter (U/T1, V/T2, W/T3, R+, R–) are **not** short-circuited and are **not** connected to ground (PE)	☐	
5	The frequency inverter has been earthed properly (PE)	☐	
6	All electrical terminals in the power section (L1, L2/N, L3, U/T1, V/T2, W/T3, R+, R–, PE) were implemented properly and were designed in line with the corresponding requirements	☐	
7	Each single phase of the supply voltage (L1, L2, L3) is protected with disconnect device	☐	
8	The frequency inverter and the motor are adapted to the input voltage (see "Nameplate Rating Data"on **Page 6**, connection type [star, delta] of the motor tested)	☐	
9	The quality and volume of cooling air are in line with the environmental conditions required for the frequency inverter and the motor	☐	
10	All connected control lines comply with the corresponding stop conditions (for example, switch in OFF position and setpoint value = zero)	☐	
11	The parameters that were preset at the factory have been checked with the list of parameters (see "List of Parameters" on **Page 161**)	☐	
12	The effective direction of a coupled machine will allow the motor to start	☐	
13	All emergency switching off functions and safety functions are in an appropriate condition	☐	

Operational Hazard Warnings

Observe the following Warnings and Cautions.

WARNING

Commissioning is only to be completed by qualified technicians.

WARNING

Hazardous voltage!

The safety instructions on Page x must be followed.

WARNING

The components in the frequency inverter's power section are energized if the supply voltage (line voltage) is connected. For instance: power terminals L1, L2/N, L3, R+, R–, U/T1, V/T2, W/T3.

The control signal terminals are isolated from the line power potential.

There can be a dangerous voltage on the relay terminals (22 to 26) even if the frequency inverter is not being supplied with line voltage (for example, integration of relay contacts in control systems with 230 Vac).

WARNING

The components in the frequency inverter's power section remain energized up to five (5) minutes after the supply voltage has been switched off (intermediate circuit capacitor discharging time).

Pay attention to hazard warnings!

DANGER
5 MIN

WARNING

Following a shutdown (fault, line voltage off), the motor can start automatically (when the supply voltage is switched back on) if the automatic restart function has been enabled.

(See parameter "P6.13".)

CAUTION

Debounced inputs may not be used in the safety circuit diagram.

Any contactors and switching devices on the power side are not to be opened during motor operation. Inching operation using the power switch is not permitted.

Contactors and switching devices (repair and maintenance switches) on the motor side must never be opened while the motor is in operation when the frequency inverter is set to speed control operating mode (P11.8 = 1).

Inching operation of the motor with contactors and switching devices in the output of the frequency inverter is not permitted.

CAUTION

Debounced inputs may not be used in the safety circuit diagram.

Make sure that there is no danger in starting the motor. Disconnect the driven machine if there is a danger in an incorrect operational status.

Note: The START button is only functional if the KEYPAD operating mode is activated.

The STOP button is active in all operating modes. It can be deactivated with parameter (P6.16 = 0).

Note: Operating ranges must be approved by the motor manufacturer if motors are to be operated with frequencies higher than the standard 50 or 60 Hz, otherwise the motors could be damaged.

Commissioning with Control Signal Terminals (Factory Setting)

M-Max frequency inverters are set in the factory and can be started directly via the control signal terminals by connecting the motor outputs allocated for the input voltage (see connection example below).

You can skip this section if you want to set up the parameters directly for optimal operation of the frequency inverter based on the motor data (rating plate) and the application.

The following shows a simplified connecting example of a connection with default settings.

Circuit Example

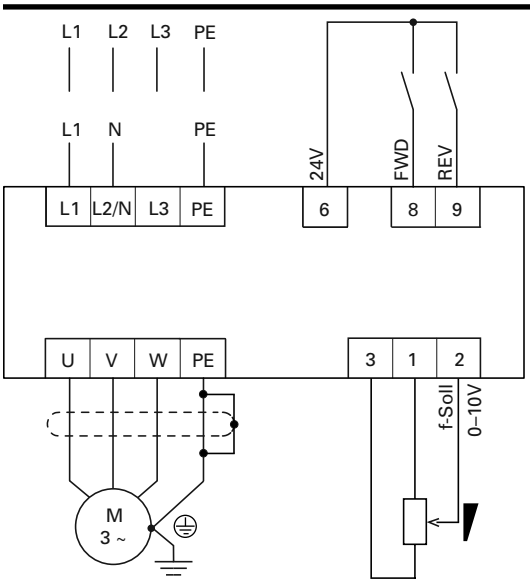

Terminal	Designation		
L1	Single-phase input connection (MMX12)	—	Three-phase input connection (MMX32, MMX34)
L2/N		Single-phase input connection (MMX11)	
L3	—		
PE	Ground connection		
6	Control voltage +24V (output, maximum 50 mA)		
8	FWD, start release clockwise rotating field		
9	REV, start release left rotating field		
U	Connection for three-phase AC motor (three-phase motor)		
V			
W			
PE			
3	Reference potential GND (0V)		
1	Setpoint value voltage +10V (output, maximum 10 mA)		
2	Frequency setpoint f-Set (input 0–10V)		

Connect the frequency inverter according to the connection example for simple commissioning with the specified default settings (see connecting example above).

If the connections for the setpoint value potentiometer cannot be clearly allocated with terminals 1, 2 and 3, you should set the potentiometer to about 50% before giving the start release (FWD/REV) for the first time.

When the specified power supply is applied to connection terminal L2/N and L3 (MMX11) or L1 and L2/N (MMX12) or L1, L2/N and L3 (MMX32, MMX34, MMX35), the LCD display lights up and all segments are displayed briefly.

The frequency inverter runs a self-test automatically when the power is applied.

The arrows (▲) in the top status line of the LCD display show the operating status:

- READY = proper operating status
- STOP = stop (no start command)

The arrows (▼) in the bottom status line show the controller commands. Actuation is done via the control signal terminals (I/O = Control Input/Output) in the factory setting.

The FWD mark (forward) designates the basic rotational direction (phase sequence for a clockwise rotating field) on connection terminals U/T1, V/T2 and W/T3.

The operating data of the output frequency is shown in the LCD display in alternating sequence with M1.1 and 0.00 Hz. The arrow ◀ in the left-hand status line indicates menu level MON (Monitor = operating data display).

Operational Data Indicator (Operational)

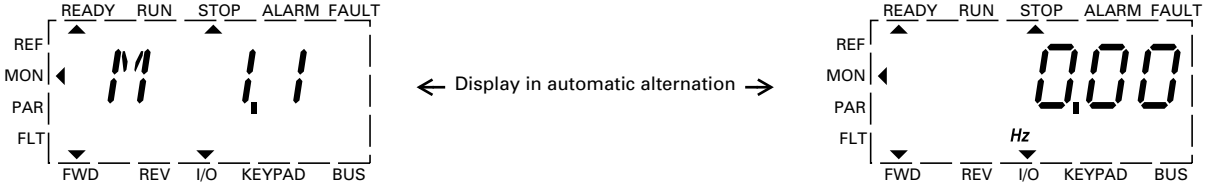

By actuating the OK button, you can set the display mode to stay on the value for the output frequency (0.00 Hz).

The start release is done by actuating one of the digital inputs with +24V:

- Terminal 8: FWD = Clockwise rotating field (Forward Run)
- Terminal 9: REV = Counterclockwise rotating field (Reverse Run)

The control commands are interlocked (exclusive OR) and require a rising voltage edge.

The start release (FWD, REV) is shown in the top status line (LCD display) by the arrow (▲) switching from STOP to RUN.

The frequency is shown with a minus sign with a start release with a left rotating field (REV).

The stop command can also be given via the STOP button on the operating unit. The STOP button is active in all operating modes. It can be disabled with parameter (P6.16 = 0).

A controlled run-down can be set using parameter P6.8 (STOP function) (P6.8 = 1).

The relevant deceleration time is set in parameter P6.6. The acceleration time are set in parameter P6.5.

Information on settings and the description of the parameters used here are provided in "Drives Control (P6)" on **Page 82**.

Operation (RUN) via Control Signal Terminal (I/O) with Left Rotating Field (REV) (for example, –12.34 Hz)

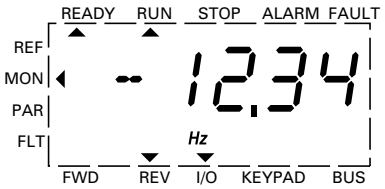

You can now set the output frequency (0–60 Hz) and therefore the speed of the connected AC motor (0–n_{motor}) with the setpoint value potentiometer via terminal 2 (proportional voltage signal 0–10V). The change in output frequency here is delayed based on the specified acceleration and deceleration ramps. In the factory settings, these times are set to 3 seconds.

The acceleration and deceleration ramps specify the time change for the output frequency: from zero to f_{max} (FS = 60 Hz) or from f_{max} back to zero.

The figure on **Page 54** shows a good example of the process, if the release signal (FWD/REV) is switched on and the maximum setpoint voltage (+10V) is applied. The speed of the motor follows the output frequency depending on the load and moment of inertia (slip), from zero to n_{max}.

If the release signal (FWD, REV) is switched off during operation, the inverter is blocked immediately (STOP). The motor comes to an uncontrolled stop (see **[1]** in the figure on **Page 54**).

Start-Stop Command with Maximum Setpoint Value Voltage, Acceleration Ramp 3s

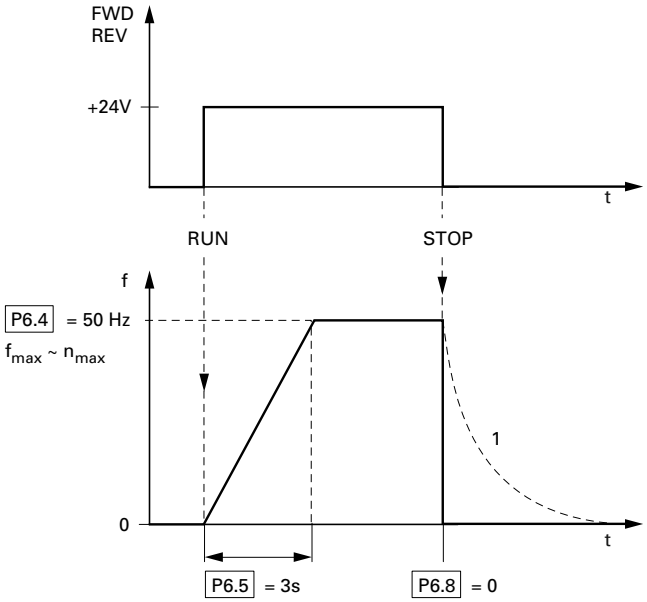

As an alternative (OR) to operation via control signal terminals, you can also operate the frequency inverter without connecting the control signal terminals by simply switching the control level and the setpoint value input.

LOC/REM button
LOC = local, keypad (KEYPAD)
REM = remote (I/0, BUS)

The following brief instructions indicate the required steps.

Brief Instructions

The brief instructions (see the figure on **Page 55**) provide a graphical description of the few steps necessary up to the motor start.

- The frequency inverter carries out a self-test when the supply voltage is applied. The backlight of the LCD display is switched on and all segments are briefly actuated

When the MMX is switched on for the first time, it activates the Quickstart Wizard to guide you step-by-step through the drive parameters (alternating display of P1.1 = 1).

First read "Parameters" starting on **Page 60**.

You can access the parameters when P1.1 = 0. Pressing [BACK/RESET] [∧] [OK] leads you to the operating data display MON. This is always displayed after the power supply is switched off.

The frequency inverter is ready to start when there is an alternating display M1.1 ⟷ 0.00 Hz.

Pressing the OK button allows you to change the alternating mode of the displayed value M1.1.

- The frequency inverter is now ready for operation, and is factory set for activation and frequency setting via the control signal terminals (I/0). The STOP button is active in this mode

The KEYPAD control level can be activated via the LOC/REM button. The menu level (◀) moves to REF and the displayed value switches to 0.00 Hz (default settings).

Pressing the OK button activates the setpoint entry. The right-hand digit of the displayed 0.00 Hz flashes.

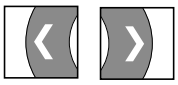

Use these two arrow buttons to select the entry digit (cursor).

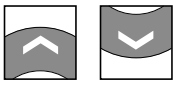

Use these two arrow buttons to change the frequency values (frequency set value).

Changes are only possible when there is flashing at the entry digit (press OK button).

Press the START button to start (RUN) the drive in the selected direction (default settings FWD).

- The direction can be changed via the two arrow buttons (< or >, cursor)
- The drive is factory set to stop at 0 Hz and can then be run in the opposite direction by pressing the START button. Parameter P6.14 = 0 must be set in order to change direction without a stop

In the default settings, the STOP button is active in all operating modes.

The STOP function can be set via P6.8:

- Free coasting
- Deceleration ramp

Brief Instructions: Steps to the Motor Start

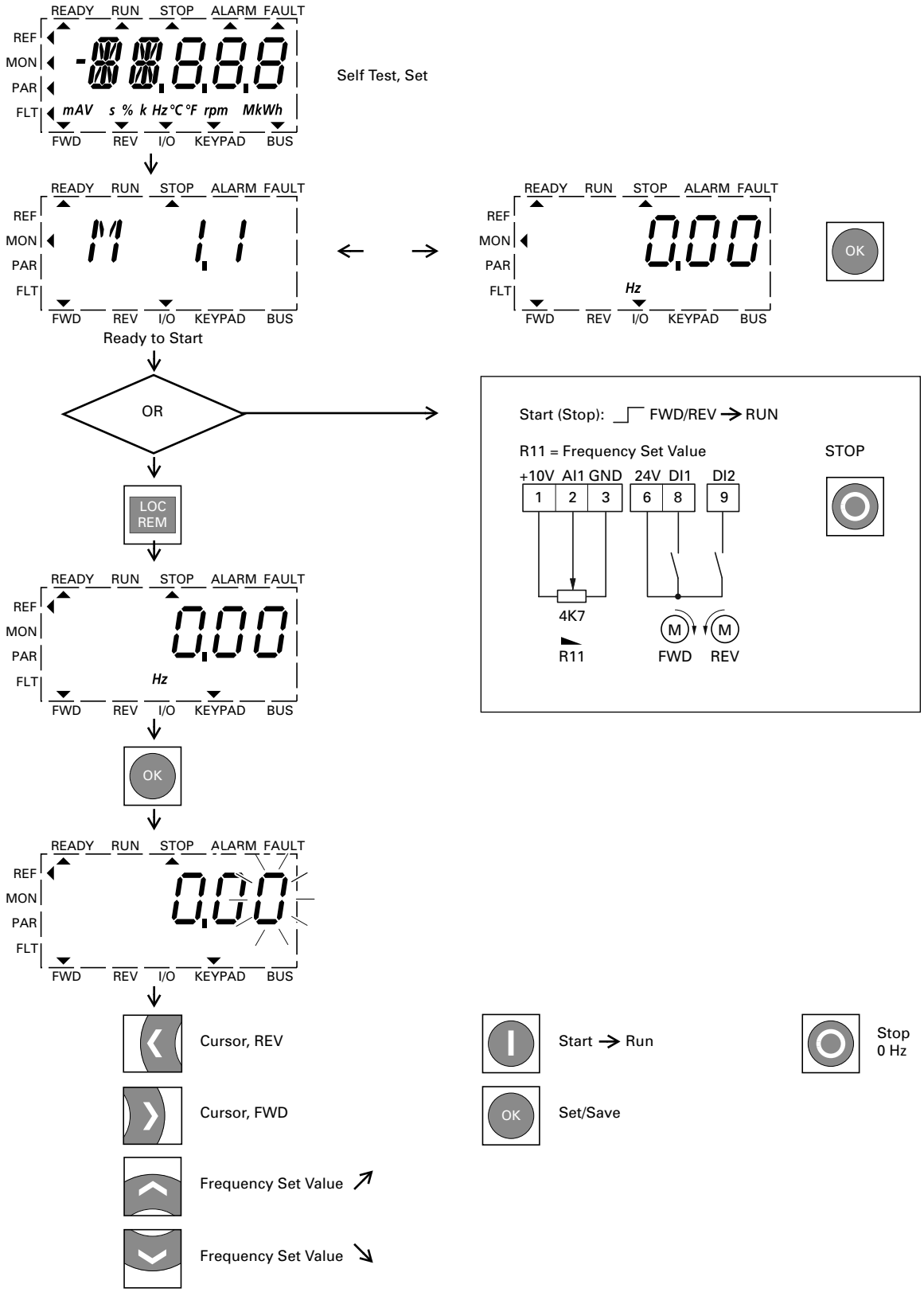

Error and Warning Messages

Introduction

M-Max frequency inverters have several internal monitoring functions. When deviations from the correct operating status are detected, faults (FAULT) and warning messages (ALARM) are differentiated between.

Error Messages

Faults can cause defective functionality and technical defects. The inverter (frequency inverter output) is automatically disabled if a fault is detected. After this, the connected motor comes to a stop freely.

Error messages are shown on the display with an arrowhead ▲ under FAULT and with the error code F… (F1 = last fault, F2 = second to last, and so on).

Example of an Error Message (Undervoltage)

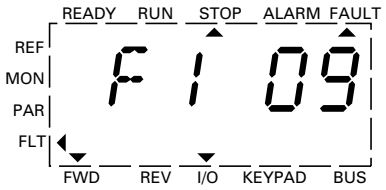

Acknowledge Fault Message (Reset)

The current error message flashes (for example, F1 09). It can be acknowledged by pressing the OK button followed by BACK/RESET or by actuating DI5 (default settings control signal terminal 15). The displayed error then automatically stops flashing, the four horizontal bars (Reset) are shown and the error message is then displayed continuously. The arrow point ▲ underneath FAULT disappears.

⚠ WARNING

If a start signal is present, the drive is restarted automatically, if P3.1 = 0 is set (REAF = Restart after FAULT) and the error message has been acknowledged (Reset).

The current fault message indication (F1...) is cleared when the supply voltage is interrupted or when you press the OK button followed by BACK/RESET. The indication goes out and the arrow tip ◀ flashes at menu level MON.

Fault Log (FLT)

The last nine faults can be called up and shown in succession in the fault log (FLT).

Select the FLT menu level (◀). Use the arrow buttons ∧ and ∨ to call the faults F1–F9 individually. Every error message is stored with the time of the error occurrence under d (day), H (hour) and m (minute). The call is made with the OK button, and the selection with the ∧ and ∨ arrow buttons.

The content of the error memory is cleared when the factory setting is activated. When you press the BACK/RESET button, the display of the menu level (◀) flashes and the STOP button is held down for around 5 seconds.

Activating the factory settings will reset all parameters.

Alarm Messages

A warning message signals possible damage and indicates impending errors that can still be prevented, such as an excessively high temperature rise.

Warning messages appear on the display with an arrow ▲ under ALARM and AL with the respective code number. The code numbers for faults and warning messages are identical.

Example of an Alarm Message

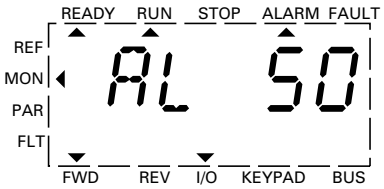

If a warning message occurs, the frequency inverter remains active (READY, RUN).

In the given example (AL 50 = current setpoint signal 4–20 mA interrupted), the drive stops following the absence of a reference value. If no more measures are introduced because of the warning message (for example, a shutdown), the drive can start again automatically in the example AL 50 when the current signal returns (for example, a contact fault in the signal line).

The alarm message (AL) is displayed alternating with the active operational display value.

The table on **Page 57** shows the error codes, their possible causes, and indicates correction measures.

List of Fault Messages (F) and Warning Messages (AL)

Display	Designation	Possible Cause	Instructions
01	Overcurrent	The frequency inverter has detected an excessive current (> 4 x I_N) in the motor cable Sudden load increase Short circuit in motor cable Inadequate motor	Check the load Check the motor size Check the cable (See parameter P6.6)
02	Overvoltage	The DC intermediate circuit voltage has exceeded the internal safety limit The delay time is too short High overvoltage peaks in line power	Increase braking time
03	Ground fault	An additional leakage current was detected when starting by means of a current measurement Insulation fault in the cables or in the motor	Check the motor cable and the motor
08	System fault	CPU error message Internal communication fault	Reset error: Switch input voltage off and on (restart) ① If the fault occurs again, contact your local representative
09	Undervoltage	The DC intermediate circuit voltage has exceeded the internal safety limit Probable cause: The supply voltage is too low Internal device fault Power failure	If a brief power failure takes place, reset the fault and restart the frequency inverter Check the supply voltage. If it is okay, there is an internal fault If this is the case, contact your local representative
13	Undertemperature	The IGBT switch temperature is below 14°F (–10°C)	Check the ambient temperature
14 ②	Overtemperature	The IGBT switch temperature is above 248°F (120°C) An excessive temperature warning is issued if the IGBT switch temperature goes above 230°F (110°C)	Make sure that there is an unobstructed flow of cooling air Check the ambient temperature Make sure that the switching frequency is not too high in relation to the ambient temperature and to the motor load
15	Motor stalled	The motor blocking protection mechanism has been triggered	Check the motor
16	Motor overtemperature	The frequency inverter's motor temperature model has detected motor overheating. The motor is overloaded	Decrease the motor load If the motor is not overloaded, check the temperature model parameter
17	Motor underload	Motor idle, connection to load machine interrupted (for example, torn drive belt)	This function must be activated at P8.5. The overload message is set at P8.12 and P8.13
22	EEPROM checksum error	Error when storing parameters Malfunction Component fault Error in microprocessor monitoring	Contact your local Eaton representative
25	Watchdog (API)	Error in microprocessor monitoring Malfunction Component fault	Reset the fault and restart If the fault occurs again, contact your local representative
27	Back EMF	Electromotive force The voltage induced in the motor with the rotation is greater than the output voltage of the frequency inverter	The rotation energy is greater than the braking energy Lengthen deceleration times Switch on brake chopper and braking resistor Use higher rated frequency inverters
35	Application error	The application is not working	Contact your local Eaton representative
41	IGBT overtemp	The IGBT switch temperature is above 248°F (120°C) An excessive temperature warning is issued if the IGBT switch temperature goes above 230°F (110°C)	Make sure that there is an unobstructed flow of cooling air Check the ambient temperature Make sure that the switching frequency is not too high in relation to the ambient temperature and to the motor load

Notes

① There are subcodes associated with this error. To get the subcode scroll to the M (minute) value within the fault menu. The value listed is the subcode.

② Power software ≦V018 IGBT overtemperature. Power software ≧V019 heat sink overtemperature.

List of Fault Messages (F) and Warning Messages (AL), continued

Display	Designation	Possible Cause	Instructions
50	Live zero error (analog input)	Monitored zero point Current less than 4 mA, voltage less than 2V Signal cable interrupted The signal source is faulty	Check the analog setpoint circuit and current and voltage source (see parameter P2.1, P2.5, P8.1, P8.10)
51	External fault	Error message at a digital input (DI1–DI6), programmed as input for an external error message	Check the programming (P3.5, P3.6) and check the device indicated by the error message Check the cabling for the respective device as well
53	Fieldbus error	The communication link between the master device and the drive's fieldbus has been interrupted	Check the installation Further notes are provided in the manual of the optional fieldbus interface (CANopen, PROFIBUS DP, and so on) If the installation is okay, contact your local representative
54	Fieldbus interface error	MMX-NET-XA mounting frame for fieldbus interface cards is not connected to the frequency inverter Optional fieldbus interface is not fitted	Error message with activated fieldbus connection of the interface between the frequency inverter and the mounting frame (MMX-NET-XA) Error message as per P8.15 Further notes are provided in the optional fieldbus interface manual (CANopen, PROFIBUS DP, and so on)

Acknowledge Fault (Reset)

By switching the supply voltage off, the error message (F, FAULT) is acknowledged and reset. The error code with the respective operating times (d = days, H = hours, M = minutes) remains stored (FLT).

In the factory setting, you can also acknowledge the error with a 24 Vdc signal on terminal 15 (DI5 = Reset). The error code is not deleted in this case.

The following table shows the required operations for acknowledging an error message via the operating unit.

Error Messages via Operating Unit

Operating Unit Element	Explanation
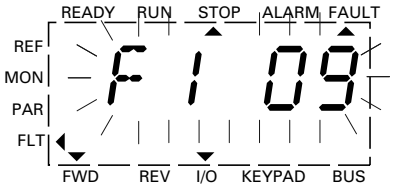	F1 = Current fault message (flashing display) 09 = Undervoltage (example)
  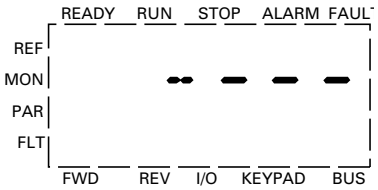 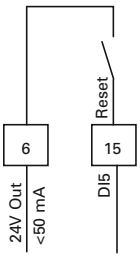	Actuate the BACK/RESET button or terminal DI5 (reset) to acknowledge the error message
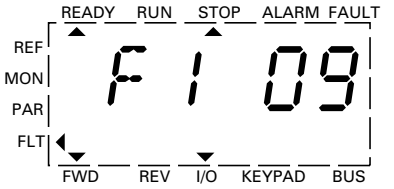	The acknowledged fault message is displayed with READY and the failure code
  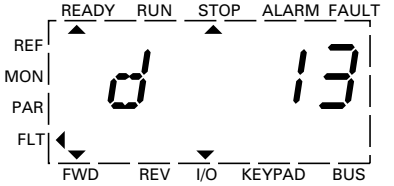	By actuating the OK button, the number of operating days (for example, d = 13 days) until this fault message is displayed You can also show the respective hours (H) and minutes (M) of operation with the arrow button ∨
	You exit the fault log (FLT) with the BACK/RESET button The ◀ arrow moves to MON in the menu level
	Use the OK button to activate the operating data display now or select another menu level with the arrow keys ∧ or ∨

Parameters

Control Unit

The following figure shows the elements of the M-Max's integrated control unit.

View of the Keypad with LCD Display, Function Keys and Interface (LCD = Liquid Crystal Display)

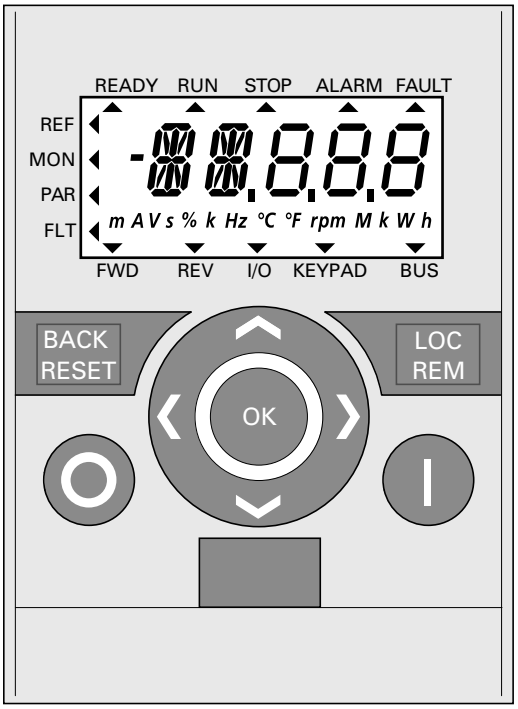

Control Unit Elements

Operating Unit Element	Explanation
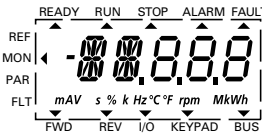	Backlit liquid crystal display (LCD) Plain text with alphanumeric characters
	Acknowledge fault message (Reset) Activates the selection for the menu levels (◀ flashes)
	Move between different control levels (I/O–KEYPAD–BUS) according to parameter settings P6.1 and P6.17
	Select function and parameter Increase numerical value
	Confirm and activate selection (store) Lock display
	Select function and parameter Reduce numerical value
 	Move to the individual parameter groups (… S4.1–P1.1–P2.1–P3.1 …) In displays with several digits, move between the individual digits (cursor) Direction reversal (FWD ⟷ REV) in KEYPAD mode
	Stops the running motor (P6.16) Reset: Holding down the button for 5 seconds causes the default settings to be loaded. All parameters are reset and the fault memory (FLT) is cleared
	Motor start with selected direction of rotation (only active in KEYPAD control level)
	Interface for communication (Option: MMX-COM-PC)

Pressing the arrow buttons increases or decreases the active value, the parameter, or function by one unit. Holding down an arrow button makes the change automatically.

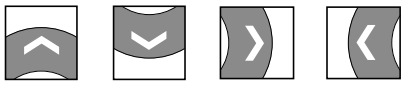

Display Unit

The following shows the display unit (LCD display with all display elements).

LCD Display (Areas)

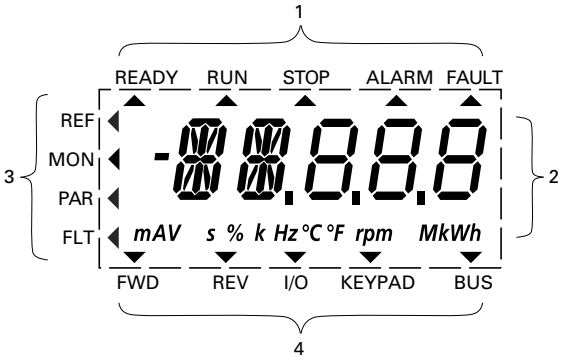

The display unit consists of a backlit liquid crystal display (LCD). It is divided into four areas.

Areas of the LCD Display

Area		Description
1	Status indicator	The arrowheads (▲) on the top border show information regarding the drive: READY = Ready to start RUN = Operating notification STOP = Stop, stop command activated ALARM = Alarm message activated FAULT = The drive has been stopped due to an error message
2	Plain text display	Two 14- and three 7-segment blocks for displaying: AL = Alarm message F = Error messages M = Measurement value (operating data) P = Parameter numbers S = System parameter - = Anticlockwise field of rotation (REV) The respective units of measurement are displayed in the bottom line
3	Menu level	The arrow ◀ shows the selected main menu: REF = Reference value input (reference) MON = Operational data indicator (monitor) PAR = Parameter levels FLT = Fault log (Fault)
4	Control commands	The arrowhead ▼ points to the selected rotating field direction and the active control level: FWD = Clockwise rotating field (forward run) REV = Counterclockwise rotating field (reverse run) I/O = Via control terminals (input/output) KEYPAD = Via control unit BUS = Via fieldbus (interface)

General Information on Menu Navigation

By applying the specified supply voltage to the connection terminals L2/N and L3 (MMX11), L1 and L2/N (MMX12) or L1, L2/N and L3 (MMX32, MMX34), the frequency inverter automatically runs the following functions:

- The lighting of the LCD display is switched on and all segments are actuated briefly
- After the self-test, the top status line of the LCD display indicates that the device is ready to start and proper operation by an arrow ▲ under READY. The arrow under STOP indicates that there is no start command (FWD or REV)
- The arrow ▼ in the bottom status line shows the actuation via control signal terminals with the factory setting on I/O Control (Control Input/Output). The arrow over FWD (Forward) indicates the basic rotational direction (phase sequence for a clockwise rotating field) on the output terminals U/T1, V/T2 and W/T3)
- Display for the operating data M1.1 and 0.00 Hz (output frequency) in automatic alternating sequence. The arrow ◀ in the left-hand status line indicates menu level MON (Monitor = Operating data display)

Operational Data Indicator (Operational)

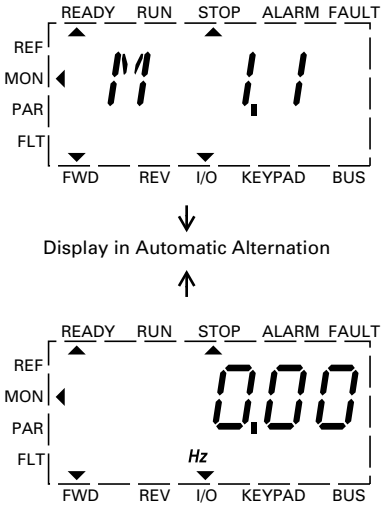

By actuating the OK button, you can set the alternating display mode to stay on the output frequency (0.00 Hz).

The frequency inverter is ready for operation and can be started via the control signal terminal with the specified values from the factory settings when connecting the allocated motor output (see "Commissioning with Control Signal Terminals (Factory Setting)" on **Page 52**).

Setting Parameters

The following table is a good example of the general execution for selecting and setting parameters.

When the MMX is switched on for the first time, it activates the Quickstart Wizard to guide you through specific parameters. (See as per "Step" 2.)

Setting Parameters

Sequence	Commands	Display	Description
0		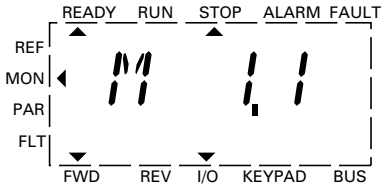	Measured value 1.1 The display changes automatically with the value of the output frequency 0.00 Hz (at STOP)
1		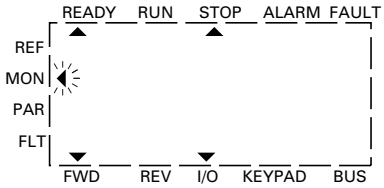	By actuating the BACK/RESET button, you activate the menu level (arrow flashes)
	   		The two arrow buttons enable you to select the individual main menus: REF = Setpoint input (reference) MON = Operational data indicator (monitor) PAR =Parameter levels FLT = Fault log (Fault) Use the OK button to open the selected main menu
2		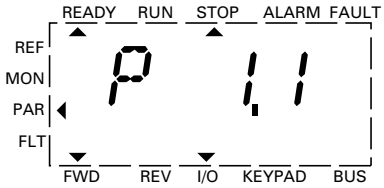 ↓ Display in Automatic Alternation ↑	The numerical first value is always shown from the selected main menu Example: Main menu PAR, Parameter P1.1 The display automatically switches between the parameter number and the defined value P1.1 =1 is displayed at the first switch on and after the factory settings have been activated
		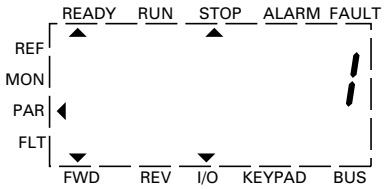	Use the OK button to activate the selected parameter. The value (1) flashes P1.1 =1: The Quickstart Wizard is activated and guides you step-by-step through the specific drive parameters (see **Page 65**)

Setting Parameters, continued

Sequence	Commands	Display	Description
3		READY RUN STOP ALARM FAULT REF MON PAR FLT FWD REV I/O KEYPAD BUS	If the parameter value is flashing, you can use the two arrow keys to change the value within the permitted range P1.1 = You exit the Quickstart Wizard (access to all parameters)
	OK	READY RUN STOP ALARM FAULT REF MON PAR FLT P 1.1 FWD REV I/O KEYPAD BUS	The selected value is confirmed with the OK button The display now changes automatically between the new value and the respective parameter number
4		READY RUN STOP ALARM FAULT REF MON PAR FLT P 2.1 FWD REV I/O KEYPAD BUS	The other parameters in the main menu PAR can be selected with the two arrow buttons (⌃ or ⌄) (closed circuit, Example: Factory setting)
		READY RUN STOP ALARM FAULT REF MON PAR FLT S 4.3 FWD REV I/O KEYPAD BUS	P14.16 P2.1 P1.1 S4.3 S1.1
		READY RUN STOP ALARM FAULT REF MON PAR FLT S 4.1 FWD REV I/O KEYPAD BUS	The arrow buttons (< and >) enable you to select the first parameter of each parameter group > P1.1, P2.1, P3.1, P4.1, … < S4.1, S3.1, S2.1, S1.1, P14.1, …
5	BACK RESET	READY RUN STOP ALARM FAULT REF MON PAR FLT FWD REV I/O KEYPAD BUS	By actuating the BACK/RESET button, you exit main menu PAR (arrow flashes, see sequence 1)

All settings are stored automatically by actuating the OK button.

Parameters marked in the "Access Right RUN" column with ✓, can be changed during operation (RUN mode).

Parameter Menu (PAR)

You have access to all M-Max parameters in the parameter menu (PAR) (see "List of Parameters" on **Page 161**).

Parameter Menu (P1.1 = 1, Quick Configuration)

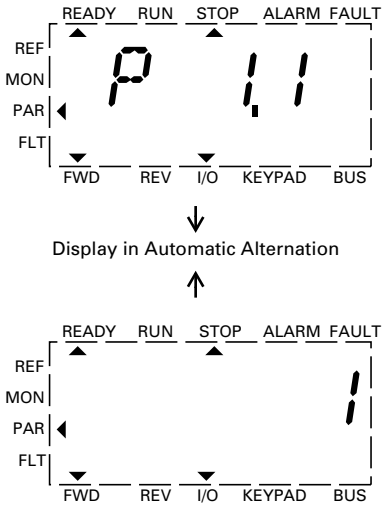

The parameter menu always starts with the parameter P1.1.

P1.1 = 1 means that you are guided through the parameters by the Quickstart Wizard. Here you must confirm a specified number of parameters individually (see **A**).

P1.1 = 0 gives you free access to all parameters (see **B**).

Schematic Representation of Parameter Access

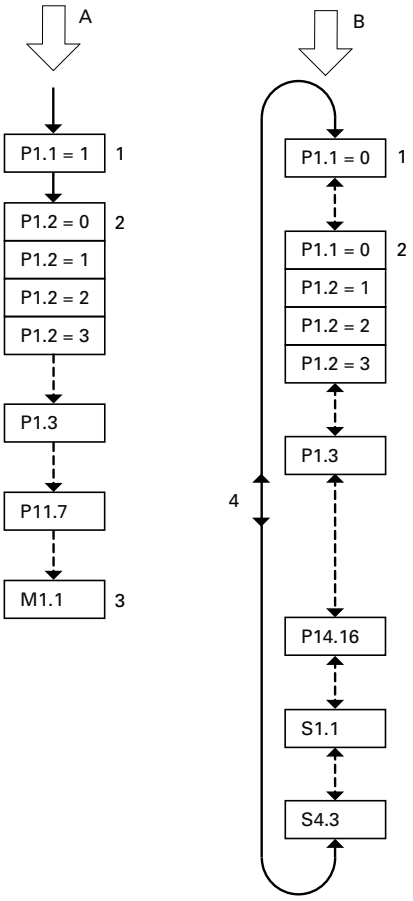

Item Number	Description
A	Guided access and selected parameters with the Quickstart Wizard (use OK button to move further)
B	Free access to all parameters (move further using the four arrow buttons)
1	Parameter conceal selection P1.1 = 1 (Factory setting) The quick start assistant guides you to the selected parameters (predefined parameter change) P1.1 = 0 allows access to all parameters (free parameter selection)
2	Selection of pre-defined parameter values for various applications (see table on **Page 66**) P1.2 = 0: Basic, no preliminary setting P1.2 = 1: Pump drive P1.2 = 2: Fan drive P1.2 = 3: Feed unit (high load)
3	Completion of the quick configuration and automatic switch to frequency display Selecting the PAR menu level again allows the free selection of the required quick configuration parameters and the system parameter (S)
4	Free selection of all parameters (P1.1 = 0) with the two arrow buttons ∧ and ∨ or < and >

Quickstart Wizard

The quick start assistant guides you in the quick configuration through all important settings that have to be made or that you should check for your application (see **A** in figure on **Page 64**). The parameters that are called during the process are listed in the table on **Page 66**, in the "Basic (Standard Drive)" column.

The process is run from parameter to parameter. Returning is not possible here.

In the quick configuration, the OK button activates the individual parameter values and then moves on to the next parameter. Every parameter always shows the value that is set in alternating sequence. By actuating the OK button again, you activate the value (value flashes).

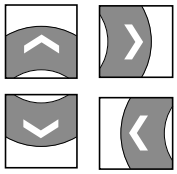

The arrow buttons have restricted functionality (change of parameter values and cursor control) in the quick start configuration.

When the quick configuration is completed, the frequency display M1.1 is activated automatically. Selecting the PAR main menu again enables you to call up the parameters of the quick configuration and then change them freely.

Besides the parameters of the quick configuration, system parameters S1.1 to S4.3 are also shown after the first setting.

P1.1 = 0 activates access to all parameters and the full functionality of all buttons of the keypad (free parameter definition, see **B** in the figure on **Page 64**).

This exits the quick configuration and the guided setup with the quick start assistant.

Quick Start Parameter Guide

The following table shows the preset application parameters of parameter P1.2. in the factory setting.

With P1.1 = 1 you are guided through the drive parameters in steps (Quickstart Wizard) after the power supply is switched on and after the factory settings are activated.

Note: To cancel Quickstart Wizard, or to set parameter not contained in the Quickstart Wizard, set parameter P1.1 = 0.

For detailed explanation of parameters and their options, see the detailed parameters list starting on **Page 67**.

Predefined Application Parameters from Parameter P1.2

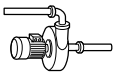

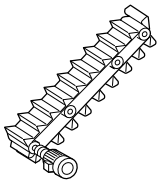

Parameter (PNU)	Basic (Standard Drive)	Pump Drive	Fan Drive	High Load	Designation
P1.1	1 = Only quick configuration parameters	1 = Only quick configuration parameters	1 = Only quick configuration parameters	1 = Only quick configuration parameters	**Quick start parameters**
P1.2	0 = Basic	1 = Pump drive	2 = Fan drive	3 = Hoisting device (high load)	**Application**
P1.3	1 = N/A	1 = N/A	1 = N/A	1 = N/A	**Country specific default settings**
P6.1	1 = Control signal terminals (I/O) (I/O)	1 = Control signal terminals (I/O) (I/O)	1 = Control signal terminals (I/O) (I/O)	1 = Control signal terminals (I/O) (I/O)	**Primary remote control source**
P6.2	3 = AI1 (analog setpoint 1)	3 = AI1 (analog setpoint 1)	3 = AI1 (analog setpoint 1)	3 = AI1 (analog setpoint 1)	**Primary remote speed reference**
P6.3	00.00 Hz	20.00 Hz	20.00 Hz	00.00 Hz	**Minimum frequency**
P6.4	60.00 Hz	60.00 Hz	60.00 Hz	60.00 Hz	**Maximum frequency**
P6.5	3.0s	5.0s	20.0s	1.0s	**Acceleration time (acc1)**
P6.6	3.0s	5.0s	20.0s	1.0s	**Deceleration time (dec1)**
P6.7	0 = Ramp (acceleration)	0 = Ramp (acceleration)	0 = Ramp (acceleration)	0 = Ramp (acceleration)	**Start function**
P6.8	0 = Free coasting	1 = Deceleration time (ramp)	0 = Free coasting	0 = Free coasting	**Stop function**
P7.1	I_e	I_e	I_e	I_e	**Motor, rated current**
P7.3	1720 RPM	1720 RPM	1720 RPM	1720 RPM	**Motor, rated speed (RPM)**
P7.4	0.85	0.85	0.85	0.85	**Motor, power factor (cos φ)**
P7.5	230/460/575V ①	230/460/575V ①	230/460/575V ①	230/460/575V ①	**Motor, rated operating voltage**
P7.6	60 Hz	60 Hz	60 Hz	60 Hz	**Motor, rated frequency**
P11.7	0 = Deactivated	0 = Deactivated	0 = Deactivated	1 = Enabled	**Torque increase**
M1.1	0.00 Hz	0.00 Hz	0.00 Hz	0.00 Hz	**Output frequency (display only)**

Notes

① 230V = MMX11_, MMX12_, MMX32_.
400V = MMX34_, 575V = MMX35_.
This parameter will default based on style of unit.

Default I/O

Designation	Terminal	Function	Parameter
DI1	8	Start Fwd	P3.1, P3.2
DI2	9	Stop/Start Rev	P3.1, P3.3
DI3	10	Fixed Frequency B0 (12 Hz)	P3.9, P10.2
DI4	14	Fixed Frequency B1 (18 Hz)	P3.10. P10.3
DI5	15	Fault Reset	P3.7

Designation	Terminal	Function	Parameter
DI6	16	PID Controller Deactivate	P3.12
RO1 (NO)	22/23	Run	P5.1, P5.10
RO2 (NO/NC)	24/25/26	Fault	P5.2, P5.11
DO	13	Ready	P5.3, P5.9

Parameter Selection (P1)

In the parameter selection (P1), you can choose between the factory set quick configuration (P1.1 = 1) with a reduced parameter set and all parameters (P1.1 = 0).

The setting of the parameters with the quick configuration (P1.1 = 1) is guided by a Quickstart Wizard. (A listing of parameters is on **Page 66**.) Each executed parameter must be processed in succession up to frequency display M1.1.

A return to a previous parameter is not possible here. The preset application parameters are selected under P1.2. Only when the quick start assistant (M1.1) is completed can the parameters be called again and then also individually.

With P1.1 = 0 (all parameters) and P1.2 = 0, 1, 2, or 3, you can link the predefined application values with all parameters.

Every single parameter value is reset to factory settings every time that the application menu is activated.

Parameter Selections

PNU	ID	Access RUN	Value/ Range	Description	Factory Setting (P1.3)
P1.1	115	✓	—	**Quick start parameters**	1
			0	All parameters All parameters are shown and can be changed. Exit from Quickstart.	
			1	Only quick configuration parameters Only the selected parameters of the quick configuration are shown and can be changed (see **Page 66** for list of parameters)	
P1.2	540	X	—	**Application** (See listing of the predefined application parameters in the table on **Page 66**)	0
			0	Basic	
			1	Pump drive	
			2	Fan drive	
			3	High load (for example, hoisting or conveyor)	
P1.3	1472	X	—	**Country specific default settings**	1
			0	EU (Europe, 50 Hz networks)	
			1	NA (North America, 60 Hz networks)	
			—	The country specific factory setting takes into account the frequency based parameters in relation to 50 and 60 Hz networks:	

PNU	Designation	P1.3 = 0	P1.3 = 1
P6.4	Maximum frequency	50 Hz	60 Hz
P7.3	Motor, rated speed	1440 RPM	1720 RPM
P7.6	Motor, rated frequency	50 Hz	60 Hz
P11.2	Cut-off frequency	50 Hz	60 Hz
P11.4	V/Hz characteristic curve, mean frequency value	25 Hz	30 Hz
P14.3	Motor (2PS) nominal speed	1440 RPM	1720 RPM
P14.6	Motor (2PS) nominal frequency	50 Hz	60 Hz
P14.8	Maximum frequency (2PS)	50 Hz	60 Hz

Analog Input (P2)

In parameter group P2, you can adapt the analog inputs:

The signal range depends on the switch position of the microswitches (see figure on this page):

- S2 = V: AI1 (control signal terminal 2), voltage signal 0/2 – +10V
- S3 = mA: AI2 (control signal terminal 4), current signal 0/4 – 20 mA

Reference potential for the analog inputs (AI1, AI2) is GND (control signal terminals 3 and 5).

The allocation of the analog inputs (AI1, AI2) can be set under parameter P6.2 and P6.18 (setpoint input) as well as P9.5 and P9.6 (PI controller, actual value).

Analog Inputs AI1 and AI2

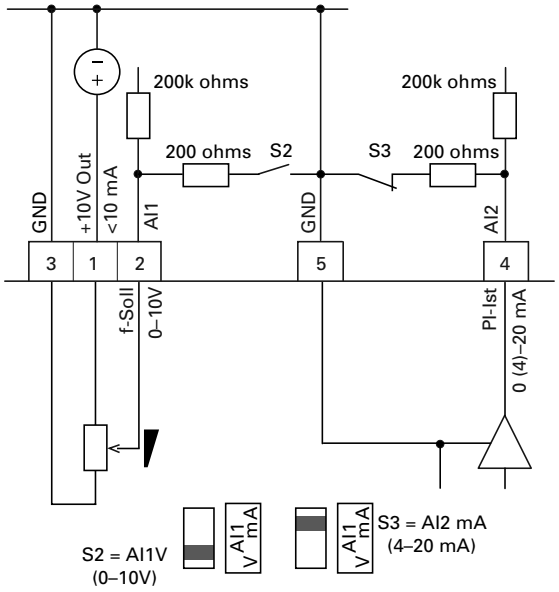

Analog Inputs

PNU	ID	Access RUN	Value/Range	Description	Factory Setting (P1.3)
P2.1	379	✓	—	**AI1 signal range (analog input)**	0
				Depending on the switch position of microswitch S2 (FS = frequency setpoint)	
			0	S2 = V: 0–10V, voltage signal (FS, see P6.2) S2 = mA: 0–20 mA, current signal	
			1	With live-zero, S2 = V: 2–10V, voltage signal S2 = mA: 4–20 mA, current signal At P8.1 it is possible to set the response of the MMX to a setpoint error (life zero)	
P2.2	380	✓	—	**AI1 custom minimum**	0.00
			–100.00% to 100.00%	Scaling of the analog input signal (V/mA) in the zero range (minimum response value) See "Scaled Value Range (AI1, AI2)" on **Page 69**	
P2.3	381	✓	—	**AI1 custom maximum**	100.00
			–100.00% to 100.00%	Scaling of the analog input signal (V/mA) in the limit value range (highest limit value) See "Scaled Value Range (AI1, AI2)" on **Page 69**	
P2.4	378	✓	—	**AI1, filter time**	0.1
			0.0	No filter function	
			0.1–10s	Filter time constant for the analog input signal (V/mA) See"Filter Time Constant" on **Page 70**	

Analog Inputs, continued

PNU	ID	Access RUN	Value/Range	Description	Factory Setting (P1.3)
P2.5	390	✓	—	**AI2 signal range (analog input)**	1
				Depending on the switch position of microswitch S3 (FS = PID controller, actual value)	
			0	S3 = V: 0–10V, voltage signal S3 = mA: 0–20 mA, current signal	
			1	With live-zero, S3 = V: 2–10V, voltage signal S3 = mA: 4–20 mA, current signal (FS, see P9.6) At P8.1 it is possible to set the response of the MMX to a setpoint error (live zero)	
P2.6	391	✓	—	**AI2 custom minimum**	0.00
			Like P2.2	—	
P2.7	392	✓	—	**AI2 custom maximum**	100.00
			Like P2.3	—	
P2.8	389	✓	—	**AI2, filter time**	0.1
			Like P2.4	—	

Scaled Value Range (AI1, AI2)

The following graphs show examples of the curve characteristics of the scaled and non-scaled input signals.

Example A
P2.2 (P2.6) = 30%, P2.3 (P2.7) = 80%

The incoming analog input signal 0–10V (4–20 mA) is used here in the selected range from 30 to 80%. This limited signal range is predefined as 0–100% input signal (AI_{scal}):

- as frequency setpoint value from 0–f_{max} (P6.4)
- as a process variable from 0–100% actual value for the PID controller

Example of Scaled Analog Input Signals

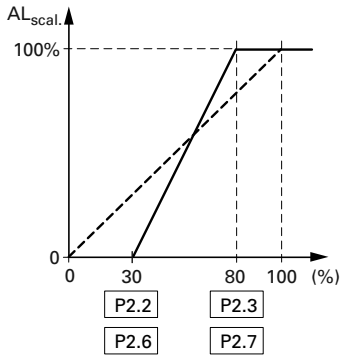

Example B
P2 (P2.6) = –30%, P2.3 (P2.7) = 100%

The incoming analog input signal 0–10V (4–20 mA) is not evaluated in the selected range from 0–30%. In relation to the 30%-signal, a constant offset signal of 23% is predefined in this case. The scaled input signal (AI_{scal}) is therefore 23–100%:

- as frequency setpoint value: 23% f_{max}–f_{max} (P6.4)
- as a process variable: 23–100% actual value for the PID controller

Example of Scaled Analog Input Signals with Offset

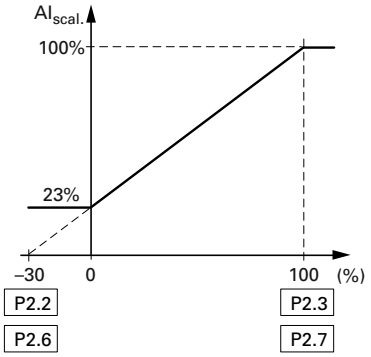

Filter Time Constant

The filter time constant can be used to filter out disturbance with analog signals.

In the default setting the filter time constant is active with 0.1 seconds. The time value set here applies to 63% of the maximum analog signal (+10V, 20 mA).

Long filter times lead to a delay in the analog signal processing.

You can deactivate the filter time constant by setting the parameter to 0.0:

P2.4 (AI1) = Filter time constant, analog input AI1

P2.8 (AI2) = Filter time constant, analog input AI2

P4.4 (AO) = Filter time constant, Analog output AO

Filter Time Constant

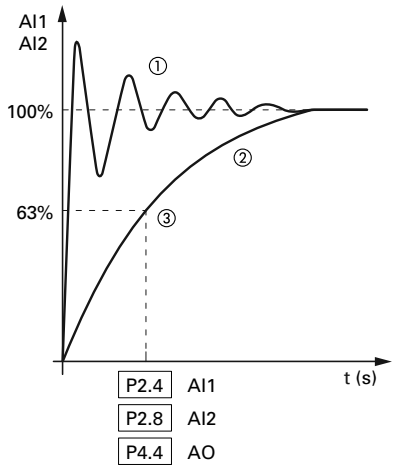

Notes

① Analog signal with faults (unfiltered).
② Filtered analog signal.
③ Filter time constant at 63% of the set value.

Digital Inputs (P3)

The parameter group P3 is used to set the operation and function of the digital inputs DI1 to DI6.

Digital Inputs for Source and Sink Type

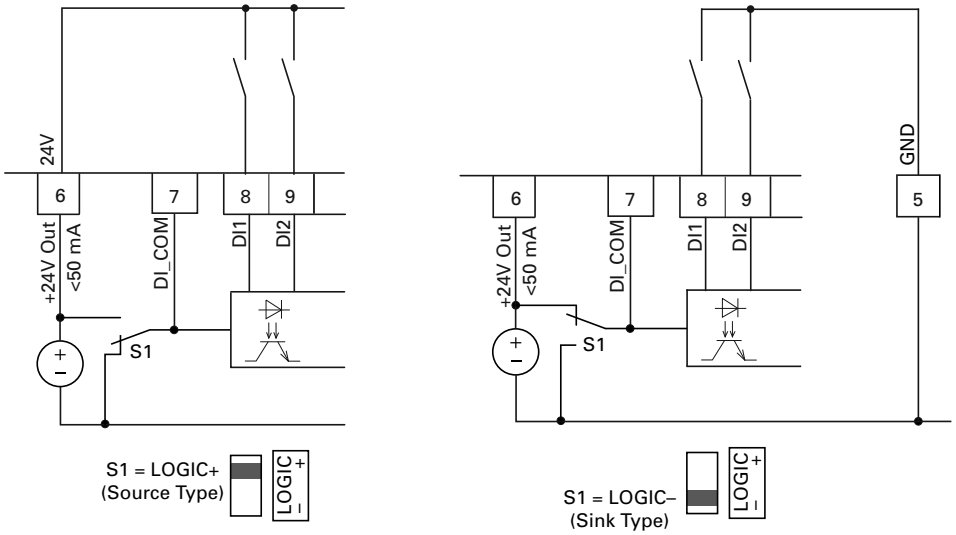

Source type (LOGIC+) = switch at the voltage source. All digital inputs are connected to the voltage sink via microswitch S1 (0V = reference potential GND).

Sink type (LOGIC–) = switch at the voltage sink (0V = reference potential GND). All digital inputs are connected to the voltage source via microswitch S1.

Both switch types ensure failsafe actuation.

Control Logic Reaction to a Rising or Falling Edge (Source Type, Sink Type)

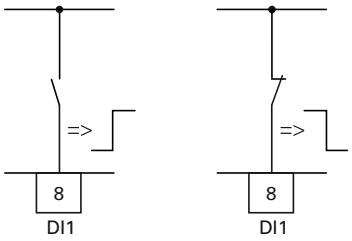

In the factory setting, the operation of the M-Max is active via control signal terminals (I/O) with LOGIC+ (Source type):

- DI1 (control signal terminal 8): FWD (Forward = Start enable clockwise rotating field)
- DI2 (control signal terminal 9): REV (Reverse = Start enable anti-clockwise rotating field)
- DI3 (control signal terminal 10): FF1 (fixed frequency 1 = 10 Hz)
- DI4 (control signal terminal 14): FF2 (fixed frequency 2 = 15 Hz)
- DI5 (control signal terminal 15): Reset (acknowledge error message ALARM)
- DI6 (control signal terminal 16): PID-Off (lock of the PID controller)

The joint actuation of control signal terminal 10 (FF1) and control signal terminal 14 (FF2) activates the fixed frequency FF3 (20 Hz) in the factory setting.

The individual digital inputs (D_) can be assigned several functions. The assigned functions are activated if, with LOGIC+, the control signal terminal is actuated with +24V (rising edge, failsafe).

Digital Inputs

PNU	ID	Access RUN	Value/Range	Description	Factory Setting (P1.3)
P3.1	300	✓	—	**Start/Stop-Logic**	3
			0	P3.2 (FWD), P3.3 (REV), REAF REAF (Restart after Fault) = Restart after an error message Function same as P3.1 = 3 The automatic restart after an error message (FAULT) requires setting P6.13 = 1 The rising edge of the control voltage at control signal terminal 8 (P3.2) or control signal terminal 9 (P3.3) is then not controlled	
			1	P3.2 (FWD) + P3.3 = REV (see Example A on **Page 76**)	
			2	P3.2 (Start pulse), P3.3 (Stop pulse) Start and stop command via the control signal (P3.2 = Start) (P3.3 = Stop) by a momentary pulse (+24V) (see Example B on **Page 76**)	
			3	P3.2 (FWD), P3.3 (REV) P3.2 (control signal terminal 8) starts the drive with a clockwise rotating field (FWD) and P3.3 (control signal terminal 9) with an anticlockwise rotating field (REV). Both control commands are interlocked (exclusive OR)	
P3.2	403	✓	—	**Start signal/Start FWD (1)**	1
			0	Deactivated	
			1	Activated via control signal terminal 8 (DI1)	
			2	Activated via control signal terminal 9 (DI2)	
			3	Activated via control signal terminal 10 (DI3)	
			4	Activated via control signal terminal 14 (DI4)	
			5	Activated via control signal terminal 15 (DI5)	
			6	Activated via control signal terminal 16 (DI6)	
P3.3	404	✓	—	**STOP signal/Start REV(1)**	2
			Like P3.2	Allocation of the function to control signal terminals	
P3.4	412	✓	—	**Reverse (changes the direction of the field of rotation from FWD to REV)**	0
			Like P3.2	Allocation of the function to control signal terminals	
P3.5	405	✓	—	**Ext. fault close (N/O)**	0
			Like 3.2	Allocation of the function to control signal terminals Error message when applying +24V to the assigned control signal terminal (DI1 to DI6)	

Digital Inputs, continued

PNU	ID	Access RUN	Value/Range	Description	Factory Setting (P1.3)
P3.6	406	✓	—	**Ext. fault open (N/C)**	0
			Like P3.2	Allocation of the function to control signal terminals Error message when switching off or interrupting (wire-breakage-safe) the applied control voltage (+24V) from the assigned control signal terminal (DI1 to DI6)	
P3.7	414	✓	—	**Fault reset**	5
			Like P3.2	Allocation of the function to control signal terminals Acknowledges a displayed error message (Reset) when switching on +24V on the assigned control signal terminal (DI1 to DI6)	
P3.8	407	✓	—	**Run enable**	0
			Like P3.2	Allocation of the function to control signal terminals Rotational direction-independent start release when switching on +24V on the assigned control signal terminal (DI1 to DI6)	
P3.9	419	✓	—	**Fixed frequency, binary value B0**	3
			Like P3.2	Allocation of the function to control signal terminals per table below	
P3.10	420	✓	—	**Fixed frequency, binary value B1**	4
			Like P3.2	Allocation of the function to control signal terminals per table below	
P3.11	421	✓	—	**Fixed frequency, binary value B2**	0
			Like P3.2	Allocation of the function to control signal terminals per table below	

The binary connection of three digital inputs enable calling seven fixed frequencies (eight fixed frequencies if parameter P6.2 = 0 is set)

The limitation of the fixed frequencies is done based on parameters P6.3 (minimum frequency) and P6.4 (maximum frequency)

The switch between the individual fixed frequencies is done with the acceleration time and deceleration times in P6.5 and P6.6

Function to Control Signal Terminals

Input (Binary)			Fixed Frequency
B0	B1	B2	(Factory setting)
			FF0, P10.1 = 6 Hz, only if P6.2 = 0
X			FF1, P10.2 = 12 Hz
	X		FF2, P10.3 = 18 Hz
X	X		FF3, P10.4 = 24 Hz
		X	FF4, P10.5 = 30 Hz
X		X	FF5, P10.6 = 36 Hz
	X	X	FF6, P10.7 = 48 Hz
X	X	X	FF7, P10.8 = 60 Hz

Digital Inputs, continued

PNU	ID	Access RUN	Value/Range	Description	Factory Setting (P1.3)
P3.12	1020	✓	—	**PID controller deactivate**	6
			Like P3.2	Allocation of the function to control signal terminals When switching on +24V power, the PID controller is blocked via the assigned control signal terminal (DI1 to DI6)	
P3.13	1400	—	—	**(Not used)**	—
P3.14	1401	✓	—	**External brake, feedback signal (N/O)**	0
			Like P3.2	Assignment of control signal terminal	
P3.15	1402	✓	—	**Change acceleration/deceleration time (acc 2/dec 2)**	0
			Like P3.2	Assignment of control signal terminal Switch acceleration time from acc1 (P6.5) to acc2 (P6.19) Switch deceleration time from dec1 (P6.6) to dec2 (P6.20)	
P3.16	1403	✓	—	**Stop acceleration/deceleration time**	0
			Like P3.2	Assignment of control signal terminal Stops all acceleration (P6.5, P6.19, P14.9) and deceleration times (P6.6, P6.20, P14.10)	
P3.17	1404	✓	—	**Block parameter access**	0
			Like P3.2	Assignment of control signal terminal Blocks access to all parameters **Note:** The resetting of all parameters to the default settings via the STOP button (held down 5s) remains active	
P3.18	1405	✓	—	**Motor potentiometer, increase value** Acceleration time, see "P6.5" (acc1)	0
			Like P3.2	Assignment of control signal terminal	
P3.19	1406	✓	—	**Motor potentiometer, decrease value** Deceleration time, see "P6.6" (dec1)	0
			Like P3.2	Assignment of control signal terminal	
P3.20	1407	✓	—	**Motor potentiometer, set value to zero**	0
			Like P3.2	Assignment of control signal terminal	
P3.21	1408	✓	—	**PLC program start**	0
			Like P3.2	Assignment of control signal terminal	

Digital Inputs, continued

PNU	ID	Access RUN	Value/Range	Description	Factory Setting (P1.3)
P3.22	1409	✓	—	**PLC program pause**	0
			Like P3.2	Assignment of control signal terminal Pause will occur in between steps of the PLC program until control signal is removed	
P3.23	1410	✓	—	**Counter, input signal**	0
			Like P3.2	Assignment of control signal terminal Counts the activation of the selected digital input (DI1–DI6)	
P3.24	1411	✓	—	**Counter, reset**	0
			Like P3.2	Assignment of control signal terminal Resets the outputs P5.1–P5.3 = 20 and/or 21 and display value M1.21 to zero	
P3.25	1412	✓	—	**Activate secondary remote control source**	0
			Like P3.2	Assignment of control signal terminal Move between the control levels set at P6.1 and P6.17 (LOC-REM function)	
P3.26	1413	✓	—	**Activate secondary remote speed reference**	0
			Like P3.2	Assignment of control signal terminal Switch between the setpoint sources AI1 and AI2 set at P6.2 and P6.18	
P3.27	1414	✓	—	**Activate second parameter set (2PS)**	0
			Like P3.2	Assignment of control signal terminal The values set at the parameter group P14 are activated	
P3.28	1415	✓	—	**Fieldbus, remote input**	0
			Like P3.2	Assignment of control signal terminal The assigned digital input is written directly to the general status word (ID 2102, bit 11)	
P3.29	1416	✓	—	**Counter reference value 1**	0
			0–65,535	Trigger value for P5.1–P5.3 = 20	
P3.30	1417	✓	—	**Counter reference value 2**	0
			0–65,535	Trigger value for P5.1–P5.3 = 21	
P3.31	1418	✓	—	**DI1 logic (control signal terminal 8)**	0
				The logic activates the response of the control signal terminal (see figure on **Page 71**)	
				N/O contact (failsafe) N/C contact	
			0	N/O contact	
			1	N/C contact	
P3.32	1419	✓	—	**DI2 logic (control signal terminal 9)**	0
			Like P3.31	Function	

Digital Inputs, continued

PNU	ID	Access RUN	Value/Range	Description	Factory Setting (P1.3)
P3.33	1420	✓	—	**DI3 logic (control signal terminal 10)**	0
			Like P3.31	Function	
P3.34	1421	✓	—	**DI4 logic (control signal terminal 14)**	0
			Like P3.31	Function	
P3.35	1422	✓	—	**DI5 logic (control signal terminal 15)**	0
			Like P3.31	Function	
P3.36	1423	✓	—	**DI6 logic (control signal terminal 16)**	0
			Like P3.31	Function	
P3.37	1480	✓	—	**Manual mode**	0
			Like P3.2	Changes from fieldbus mode (Modbus, CANopen, PROFIBUS, and so on) to manual mode. The control level and setpoint source required in manual mode can be set at parameters P6.31 to P6.33.	

Example A: P3.1 = 1 (P6.8 = 0)

DI1 (FWD) + DI2 = REV

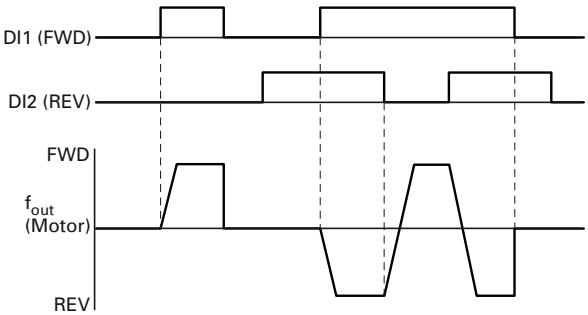

The start enable via control signal terminal 8 (DI1) is always required for operation:

- Actuation control signal terminal 8 (DI1) = Start enable, clockwise rotating field (FWD)
- Actuation control signal terminal 8 (DI1) plus control signal terminal 9 (DI2) = Start enable anticlockwise rotating field (REV)

The separate actuation of control signal terminal 9 (DI2) does not allow any start enable.

Example B: P3.1 = 2

Example: Start Stop Impulse

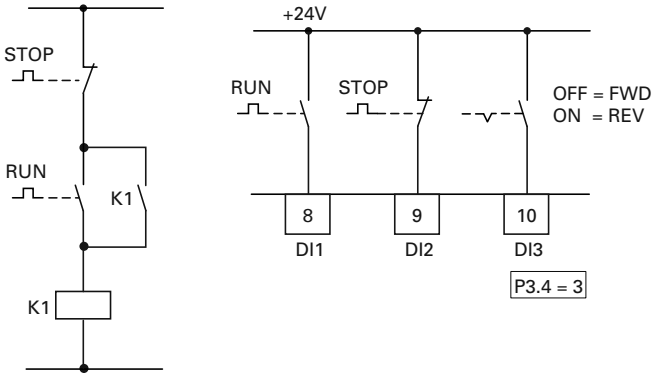

Standard actuation for a drive with pushbutton switch (Normally open, Normally closed) and self-actuating.

Parameter P3.1 = 2 enables this actuation via the control signal terminals 8 (DI1) and 9 (DI2) to be simulated.

Parameter P3.4 = 3 enables the rotation reversal (FWD ⟷ REV) to be activated (reversing starter) via control signal terminal 10 (DI3).

Set P3.9 = 0.

Analog Outputs (P4)

An analog voltage signal from 0–10V is output at control signal terminal 18. The maximum permissible load is 10 mA. Reference potential is GND on control signal terminals 3 and 5.

In the factory setting, the voltage signal (0–10V) is proportional to the output frequency f-Out = 0–f_{max} (P6.4).

The output signal is not monitored by the frequency inverter.

Analog Output AO

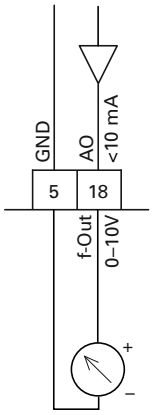

Analog Outputs

PNU	ID	Access RUN	Value/Range	Description	Factory Setting (P1.3)
P4.1	307	✓	—	**AO signal (Analog Output)**	1
			0	Deactivated	
			1	Output frequency f-Out = 0–f_{max} (P6.4)	
			2	Output current I_2 = 0–$I_{N\ Motor}$ (P7.1)	
			3	Torque M_N = 0–100% (calculated value)	
			4	PID controller, output (0–100%)	
P4.2	310	✓	—	**AO, minimum value**	1
			0	0V	
			1	2V (live-zero)	
P4.3	1456	✓	—	**AO, gain**	100.00
			0.00–200.00%	Gain factor The maximum value set here always corresponds to the maximum output voltage 10V	
P4.4	1477	✓	—	**AO, filter time**	0.10
			0.00–10.00s	Filter time constant for the analog output voltage See "Filter Time Constant" on **Page 70**	

Digital Outputs (P5)

The M-Max series frequency inverters have three digital outputs in different specifications:

- Relay RO1: N/O contact R13–R14, control signal terminals 22 and 23
- Relay RO2: changeover contact R21–R22 (N/C contact, control signal terminals 25 and 24)/R21–R24 (N/O contact, control signal terminals 25 and 26)
- Transistor output DO: control signal terminal 13 (DO–). Control signal terminal 20 (DO+) = Input of the supply voltage for the transistor output

Notes on electrical connections are found on **Pages 44** and **45**.

The messages listed under parameter P5.1 can be assigned multiple times. These are independent of the selected control level and operating mode.

Digital Outputs

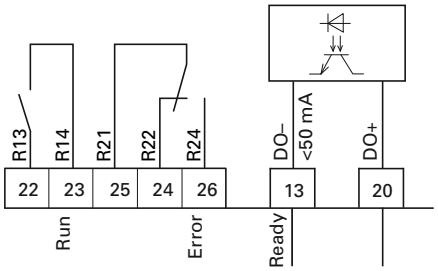

Digital Outputs

PNU	ID	Access RUN	Value/Range	Description	Factory Setting (P1.3)
P5.1	313	✓	—	**RO1 Signal (Relay 1 Output)**	2
			0	Deactivated	
			1	READY, the frequency inverter is ready for operation	
			2	RUN, the inverter of the frequency inverter is enabled (FWD, REV)	
			3	FAULT, error message Error detected (= STOP)	
			4	Error message inverted (no error message)	
			5	ALARM, warning message See "Protective Functions (P8)" on **Page 90**	
			6	REV (Reverse run), anticlockwise rotating field active	
			7	Output frequency = frequency setpoint (at speed)	
			8	Motor controller active	
			9	Zero frequency Output frequency = 0 Hz	
			10	Frequency monitoring 1 For the frequency ranges set at P5.4 and P5.5	
			11	Frequency monitoring 2 For the frequency ranges set at P5.6 and P5.7	
			12	PID monitoring For the deviation set at P9.17	

Values continued on next page

Digital Outputs, continued

PNU	ID	Access RUN	Value/Range	Description	Factory Setting (P1.3)
P5.1	313	✓	13	Overtemperature signal	2
			14	Overcurrent control active	
			15	Overvoltage control active	
			16	PLC sequence control active	
			17	PLC sequence control, single step completed	
			18	PLC sequence control, program cycle completed	
			19	PLC sequence control, pause	
			20	Counter, value 1 reached. The counter value is ≧ the trigger value set at P3.21 and can be reset by activating P3.24	
			21	Counter, value 2 reached. The counter value is ≧ the trigger value set at P3.22 and can be reset by activating P3.24	
			22	RUN message active	
			23	Analog minimum reference error Message if the setpoint signal (life zero) of AI1 and/or AI2 is below 4 mA- or 2V (P2.1 = 1, P2.5 = 1)	
			24	LOG function fulfilled Message if the logical operation of P13.3 is fulfilled (LOG = 1)	
			25	PID controller, actual value monitoring Message if the actual value is within the hysteresis set at P9.15 and P9.16	
			26	External brake actuated Switch threshold: set value of P12.8	
			27	Current monitoring Switch threshold: set value of P5.8	
			28	Fieldbus, remote output The assigned digital output is written directly to the general control word (ID 2001, bit 13)	
P5.2	314	✓	—	**RO2 signal (relay output 2)**	3
			Like P5.1	Assignment of the function	
P5.3	312	✓	—	**DO Signal (Digital Output)**	1
			Like P5.1	Assignment of the function	
P5.4	315	✓	—	**Frequency monitoring 1**	0
				Monitoring of the selected frequency range Actuate output if frequency is below or above Frequency monitoring 1 reference value defined by P5.5. A monitoring message can be implemented via the digital outputs (P5.1, P5.2, P5.3 = 10)	
			0	Deactivated	
			1	0.00–P5.5 Hz frequency is below reference P5.5	
			2	P5.5–P6.4 Hz frequency is above reference P5.5 (P6.4 = maximum frequency)	

Digital Outputs, continued

PNU	ID	Access RUN	Value/Range	Description	Factory Setting (P1.3)
P5.5	316	✓	—	**Frequency monitoring 1 reference value**	0.00
			0.00–P6.4 Hz	P6.4 = maximum frequency	
P5.6	346	✓	—	**Frequency monitoring 2**	0
				Monitoring of the selected frequency range (see P5.5 for explanation) A monitoring message can be implemented via the digital outputs (value 11 = P5.1, P5.2, P5.3)	
			0	Deactivated	
			1	0.00–P5.7 Hz frequency is below reference P5.7	
			2	P5.7–P6.4 Hz frequency is above reference P5.7 (P6.4 = maximum frequency)	
P5.7	347	✓	—	**Frequency monitoring 2 reference value**	0.00
			0.00–P6.4 Hz	P6.4 = maximum frequency	

Frequency Monitoring (P5.5–P5.7)

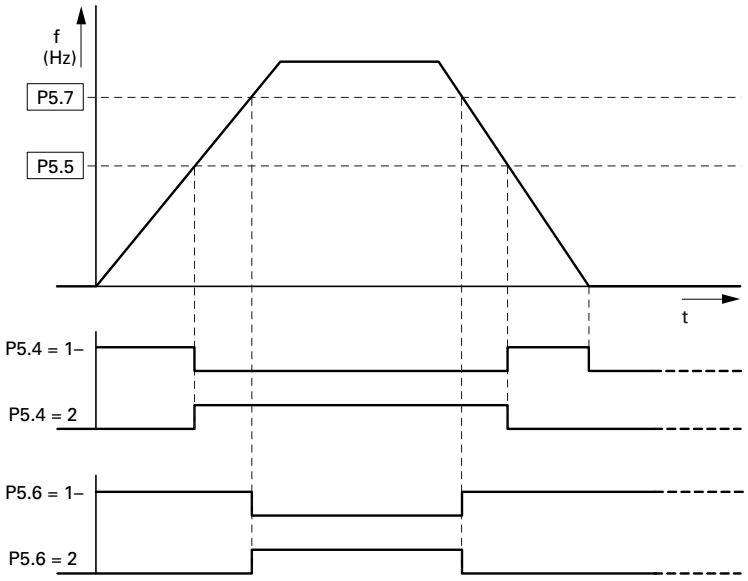

Digital Outputs, continued

PNU	ID	Access RUN	Value/Range	Description	Factory Setting (P1.3)
P5.8	1457	✓	—	**Current monitoring**	0.00
			0.00–P7.2 (I_eA)	Activate output if current value reaches value selected (P7.2 = current limit) A monitoring message can be implemented via the digital outputs (P5.1, P5.2, P5.3 = 27)	
P5.9	1458	✓	—	**DO logic (control signal terminal 13)**	0
				Operation of transistor output DO–	
			0	N/O contact	
			1	N/C contact	
P5.10	1331	✓	—	**RO1 logic (control signal terminals 22, 23)**	0
				Operation of relay contact R13/R14	
			0	N/O contact	
			1	N/C contact	
P5.11	1332	✓	—	**RO2 logic (control signal terminal 24, 25, 26)**	0
				Operation of relay changeover contact	
			0	N/O contact (R21–R24) or N/C contact (R21–R22)	
			1	N/C contact (R21–R24) or N/O contact (R21–R22)	
P5.12	1459	✓	—	**DO, on delay**	0.00
			0.00–320.00s	—	
P5.13	1460	✓	—	**DO, off-delay**	0.00
			0.00–320.00s	—	
P5.14	1461	✓	—	**RO1, on delay**	0.00
			0.00–320.00s	—	
P5.15	1424	✓	—	**RO1, off-delay**	0.00
			0.00–320.00s	—	
P5.16	1425	✓	—	**RO2, on delay**	0.00
			0.00–320.00s	—	
P5.17	1426	✓	—	**RO2, off-delay**	0.00
			0.00–320.00s	—	

Drives Control (P6)

In this parameter group (P6), you can define the operating conditions for the M-Max frequency inverter.

Drives Control

PNU	ID	Access RUN	Value/Range	Description	Factory Setting (P1.3)
P6.1	125	✓	—	**Primary remote control source**	1
			1	Control signal terminals (I/O) You can switch directly between I/O and KEYPAD with the LOC/REM button	
			2	Operating unit (KEYPAD) The LOC/REM button has no function here	
			3	Fieldbus (BUS) You can switch directly between BUS and KEYPAD with the LOC/REM button	

Selecting the control sources can be done directly with the LOC/REM button between the control source selected in P6.1 and the operating unit.

During operation (RUN) the drive is always stopped (STOP) when changing control sources (LOC/REM button).

The control source selected with parameter P6.1 or with the LOC/REM button is shown on the bottom page in the LCD display (see figure on this page).

Example: Control Level I/O Activated

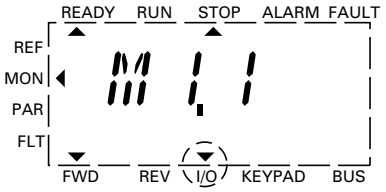

P6.2	117	✓	—	**Primary remote speed reference**	3
			0	Fixed frequency (FF0) The value can be set in parameter P10.1	
			1	Operating unit (REF) This setting causes the setpoint defined at REF to be read. It can be set via the keypad with the arrow buttons or at parameter P6.15	
			2	Fieldbus (BUS) Setpoint entry via Modbus RTU (control signal terminals A and B) or optional fieldbus connection (for example, CANopen, PROFIBUS DP)	
			3	AI1 (analog setpoint 1) Voltage set value: 0 (2)–10V at control signal terminal 2 Scaling and filtering: P2.1 to P2.4	
			4	AI2 (analog setpoint 2) Current setpoint value: 0 (4) –20 mA to control signal terminal 4 Scaling and filtering: P2.5 to P2.8	
			5	Motor potentiometer The actuation is implemented via the digital inputs assigned at P3.18 and P3.19 (DI1–DI6). The required acceleration and deceleration times can be set at P6.5 (acc1) and P6.6 (dec1) Assigning a digital input (DI1–DI6) at P6.20 enables the set value of the motor potentiometer to be set directly to zero	

Drives Control, continued

PNU	ID	Access RUN	Value/Range	Description	Factory Setting (P1.3)
P6.3	101	X	—	**Minimum frequency**	0.00
			0.00–P6.4 (Hz)	—	
P6.4	102	X	—	**Maximum frequency**	60.00
			P6.3–320 Hz	—	
P6.5	103	X	—	**Primary acceleration time (acc1)**	3.0
			0.1–3000s	(See figure and note ① below)	
P6.6	104	X	—	**Primary deceleration time (dec1)**	3.0
			0.1–3000s	(See figure and note ① below)	

Acceleration and Deceleration Time

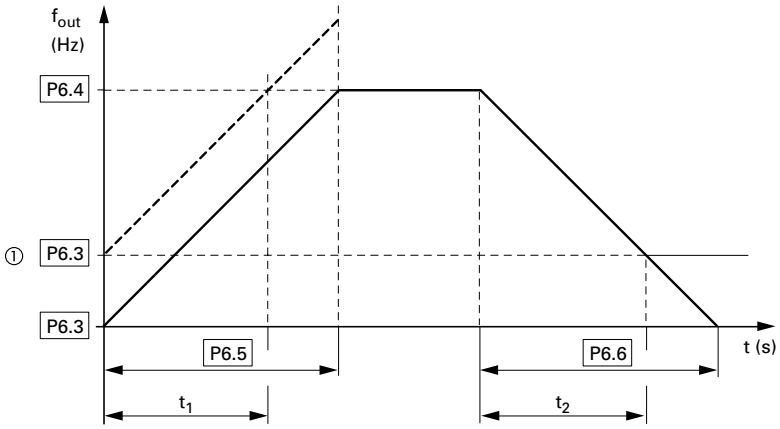

The values for the acceleration time t_1 and the deceleration time t_2 are calculated as follows:

$$t_1 = \frac{(P6.4–P6.3) \times P6.5}{P6.4}$$

$$t_2 = \frac{(P6.4–P6.3) \times P6.6}{P6.4}$$

The defined acceleration (P6.5) and deceleration times (P6.6) apply for all changes to the frequency setpoint value.

If the start-release (FWD, REV) is switched off, the output frequency (f_{Out}) is immediately set to zero. The motor runs down uncontrolled.

If a controlled run-down is requested (with value from P6.6), parameter P6.8 must be 1.

Starting friction and load inertia can lead to longer acceleration times for the drive than are set in P6.5. Large centrifugal masses or if driven by the load, the deceleration time of the drive can be greater than is set in P6.6.

Notes

① When setting a minimum output frequency (P6.3 greater than 0 Hz), the acceleration and deceleration time of the drive is reduced to t_1 or t_2.
Reference points for the acceleration and deceleration times set in parameters P6.5 and P6.6 are always 0 Hz (P6.3) and the maximum output frequency is f_{max} (P6.4).

Drives Control, continued

PNU	ID	Access RUN	Value/Range	Description	Factory Setting (P1.3)
P6.7	505	X	—	**Start function**	0
			0	Ramp (acceleration) The acceleration time with the value set at parameter P6.5	
			1	Flying restart circuit Starting on a running motor. By switching on a small current value, a small torque is created With a frequency search (beginning with the maximum frequency P6.4), the correct rotational field frequency is determined. The output frequency is then adapted to the specified setpoint frequency based on the defined acceleration (P6.5) and deceleration (P6.6) times Use this function if, for instance, the motor is already turning at the start command, with flow-machines (pumps, fans) and with short interruptions in input voltage	
P6.8	506	X	—	**Stop function**	0
			0	Free coasting The motor carries out an uncontrolled stop (coasting) after the start enable (FWD/REV) is switched off or when the STOP button (P6.16) is actuated	
			1	Ramp (deceleration) = dynamic braking Deceleration time with the value set under P6.6 If the energy that is fed back by the motor during the dynamic braking is too high, the deceleration time has to be extended. On devices with internal braking transistors, the excess energy can be dispelled through an external braking resistance (optional) (see "Braking (P12)" on **Page 112**)	
P6.9	500	X	—	**S ramp**	0.0
			0.0	Linear acceleration and deceleration time based on P6.5 and P6.6	
			0.1–10.0s	Time-graded transition to start and end of the acceleration ramp (P6.5) and deceleration ramp (P6.6) The time set here applies for both ramps (see figure below)	

S-Formed Curve for Acceleration and Deceleration Ramps

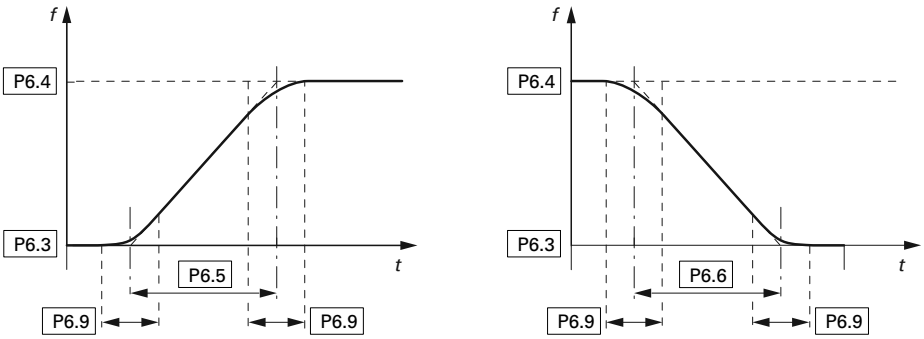

Drives Control, continued

PNU	ID	Access RUN	Value/Range	Description	Factory Setting (P1.3)
P6.10	717	X	—	**REAF, Wait time before an automatic restart**	0.50
			0.10–10.00s	Active, if P6.13 = 1 and P3.1 = 0 Waiting time until automatic restart, after the detected error has disappeared (REAF = Restart After Failure)	
P6.11	718	X	—	**REAF, Testing period over automatic restarts**	30.00
			0.00–60.00s	Active, if P6.13 = 1 Timed monitoring of the automatic restart The monitoring time begins with the first automatic restart. If more than three error messages occur during the testing period, fault status is activated. Otherwise, the error is acknowledged after the test time has elapsed and the test time is only started again with the next error. The number of fault occurrences before a fault is indicated is defined by P6.30	
P6.12	719	X	—	**REAF, Start function with automatic restart**	0
			0	Ramp (acceleration)	
			1	Flying restart circuit	
			2	According to P6.7	
P6.13	731	X	—	**REAF, automatic restart after an error message**	0
			0	Deactivated	
			1	Activated	
P6.14	1600	✓	—	**Stop on direction change via the arrow buttons (</>) of the keypad (KEYPAD)**	1
			0	Deactivated, changes the direction of rotation (FWD ⟷ REV) automatically on passing setpoint zero	
			1	Activated, stops the drive at setpoint zero and requires another actuation of the Start button	

Automatic Restart After Error Message (Two Start Attempts)

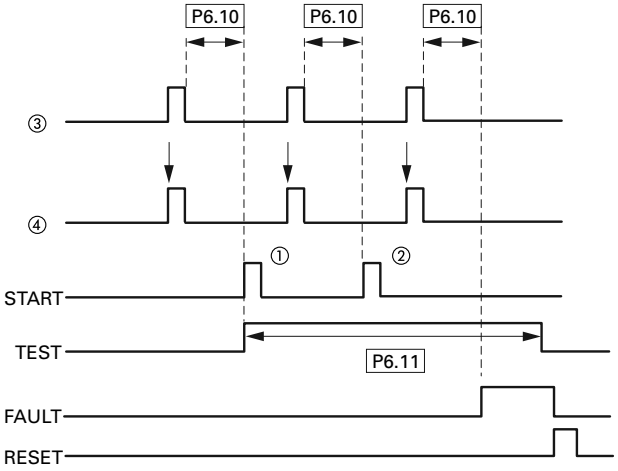

Item Number	Description
1	First automatic restart
2	Second automatic restart
3	Shut-off when error detected
4	Motor stop signal

TEST = monitored test tim
FAULT = shut-off when error message occurs
RESET = reset error message (FAULT)

Drives Control, continued

PNU	ID	Access RUN	Value/Range	Description	Factory Setting (P1.3)
P6.15	184	✓	—	**Keypad frequency reference (REF)**	0.00
			–P6.4–P6.4 Hz	The setpoint value (REF) defined here can be activated at parameter P6.2 and via the keypad (LOC/REM) In KEYPAD mode, the value can be changed with the arrow buttons. The changes are written back automatically to this parameter (P6.15)	
P6.16	1474	✓	—	**Stop button active**	1
				In the default settings, the STOP button of the keypad is active in all operating modes The Stop function can be set at parameter P6.8	
			0	No (deactivated) Stop executed only via control signal terminals (I/O) or fieldbus (BUS) Switching the LOC/REM button to KEYPAD removes the block on the STOP button function set here **Note:** This does not deactivate the Reset function (FS loading with 5s actuation of the STOP button)	
			1	Yes (activated)	
P6.17	1427	X	—	**Secondary remote control source**	3
				Assignment of the control levels as at P6.1 Control level 2 is activated via parameter P3.25	
P6.18	1428	X	—	**Secondary remote speed reference**	2
				Assignment of setpoint sources as at P6.2 Setpoint source 2 is activated via parameter P3.26	
P6.19	502	✓	—	**Secondary acceleration time (acc2)**	10.0
			0.1–3000s	See Note 1 of parameter P6.5 The activation is executed via parameter P3.15	
P6.20	503	✓	—	**Secondary deceleration time (dec2)**	10.0
			0.1–3000s	See Note 1 of parameter P6.6 The activation is executed via parameter P3.15	
P6.21	526	X	—	**Acceleration transition frequency (acc1–acc2)**	0.00
			0.00–P6.4 Hz	0.00 Hz = deactivated If the output frequency set here is exceeded, the acceleration time is switched automatically from acc1 (P6.5) to acc2 (P6.19)	
P6.22	1334	X	—	**Deceleration transition frequency (dec1–dec2)**	0.00
			0.00–P6.4 Hz	0.00 Hz = deactivated If the output frequency set here is exceeded, the deceleration time is switched automatically from dec1 (P6.6) to dec2 (P6.20)	
P6.23	1429	X	—	**REV blocked**	0
				The rotating field reversal of the output frequency is blocked	
			0	Deactivated	
			1	Activated	

Drives Control, continued

PNU	ID	Access RUN	Value/Range	Description	Factory Setting (P1.3)
P6.24	509	X	—	**Skip frequency 1, lower value**	0.00
			0.00–P6.25 Hz	—	
P6.25	510	X	—	**Skip frequency 1, upper value**	0.00
			P6.24–P6.4	—	
P6.26	511	X	—	**Skip frequency 2, lower value**	0.00
			0.00–P6.27 Hz	—	
P6.27	512	X	—	**Skip frequency 2, upper value**	0.00
			P6.26–P6.4 Hz	—	
P6.28	513	X	—	**Skip frequency 3, lower value**	0.00
			0.00–P6.29 Hz	—	
P6.29	514	X	—	**Skip frequency 3, upper value**	0.00
			P6.28–P6.4 Hz	—	

Setting Range for Skip Frequencies

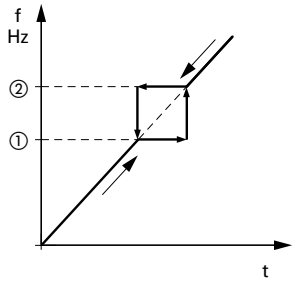

P6.30	759	X	—	**Automatic REAF attempts**	3
			1–10	Define the permissible number of automatic restarts (REAF = Restart After Failure)	
P6.31	1481	X	—	**Manual mode, primary control source**	1
			Like P6.1	Assignment of the control levels Manual mode is activated via parameter P3.37	
P6.32	1482	X	—	**Manual mode, primary speed reference**	3
			Like P6.2	Assignment of setpoint sources Manual mode is activated via parameter P3.37	
P6.33	1483	X	—	**Manual mode, KEYPAD lock**	1
				The Start/Stop functions are blocked in Manual mode via the keypad	
			0	Deactivated	
			1	Enabled	

Notes

① : P6.24, P6.26, P6.28

② : P6.25, P6.27, P6.29

In systems with mechanical resonances, you can cut out these frequency ranges for stationary operation.
Up to three different frequency ranges can be set.

Motor (P7)

For optimal operation, enter the ratings plate information for the motor here. This information makes up the base values for the motor controller (electrical reproduction, see "V/Hz-Characteristic Curve (P11)" on **Page 107)**.

Motor Parameters from Ratings Plate

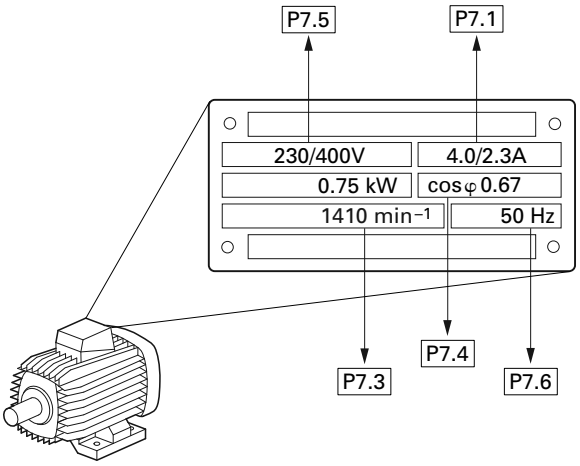

The motor data is set to the rated operation data for the frequency inverter and depends on the performance variables in factory settings.

Switching Type for Motor Stator Windings

When selecting the rating data, take the dependency of the type of switching on the strength of the feeding input voltage into account:

- 230V (P7.5) → delta circuit A → P7.1 = 4A,
- 400V (P7.5) → star connection → P7.1 = 2.3A.

Circuits (Delta, Star)

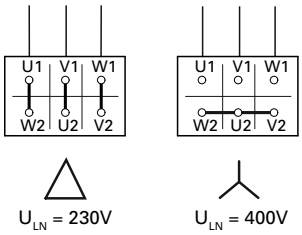

Example: Single-phase connection of the MMX12AA4D8_ frequency inverter to a input voltage of 230V. The stator winding of the motor is connected in a delta circuit (motor rated current 4A as per nameplate in figure on this page).

Required changes for the electrical reproduction for the motor: P7.1 = 4.0, P7.3 = 1410, P7.4 = 0.67.

Motor

PNU	ID	Access RUN	Value/Range	Description	Factory Setting (P1.3)
P7.1	113	X	—	**Motor, rated operational current**	I_e
			0.2 x I_e–2 x I_e (A)	I_e = Frequency inverter's rated operational current (See figure on **Page 88**.)	
P7.2	107	X	—	**Current limit**	1.5 x I_e
			0.2 x I_e–2 x I_e (A)	Factory setting: 1.5 x I_e	
P7.3	112	X	—	**Motor, rated speed**	1720
			300–20000 RPM (min^{-1})	(See figure on **Page 88**.)	
P7.4	120	X	—	**Motor, power factor (cos φ)**	0.85
			0.30–1.00	(See figure on **Page 88**.)	
P7.5	110	X	—	**Motor, rated operating voltage**	①
			180–676V	(See figure on **Page 88**.) Pay attention to the supply voltage and the type of circuit in the stator winding	
P7.6	111	X	—	**Motor, rated frequency**	60.00
			30–320 Hz	(See figure on **Page 88**.)	

Note

① Default values vary based on actual unit ratings.

Protective Functions (P8)

In parameter group P8, you can set the reaction of the frequency inverter to external influences and increase the protection to the drive system (PDS):

- 0 = deactivated, no reaction
- 1 = Alarm (for example, AL 50)
- 2 = Fault (stop mode after error message based on parameters P6.8, for example, F…50)

The (FAULT) and (ALARM) messages are described on **Page 56**.

Protective Functions

PNU	ID	Access RUN	Value/Range	Description	Factory Setting (P1.3)
P8.1	700	X	—	**Analog minimum reference error (live-zero)**	1
				Monitors the live zero of the analog inputs AI1 and AI2 if the parameters P2.1 and P2.5 are set to 1 (4 mA, 2V): AI1, control signal terminal 2, P2.1 AI2, control signal terminal 4, P2.5 A warning or error message (F… 50) is output if the signal drops below 3.0 mA or 1.5V for 5 seconds or 0.5 mA or 0.25V for 0.5 seconds. This reaction time can be changed at P8.10	
			0	Deactivated	
			1	Alarm (AL 50) **Note:** If the setpoint is restored (≧4 mA, ≧2V) the drive starts up automatically if there is no disconnection by the warning message	
			2	Fault (F… 50), stop function according to P6.8	
P8.2	727	X	—	**Undervoltage error**	2
				Under-voltage error in the intermediate circuit because of a low input-side supply voltage, for example, by connecting 230V to a 400V device or if a phase drops out	
			0	Deactivated	
			1	Alarm (AL 09) **Note:** A start signal (START button, rising edge on the control terminals) must exist again for restarting	
			2	Fault (F… 09), stop function according to P6.8	
P8.3	703	X	—	**Ground fault**	2
				The ground fault monitoring checks the currents in the motor phases and is continually active. It protects the frequency inverter from ground faults with high currents	
			0	Deactivated If the monitoring is deactivated, the reaction time is shortened to a start signal **Caution:** When the monitoring is deactivated, a ground fault can cause damage to the inverter	
			1	Alarm (AL 03)	
			2	Fault (F… 03), stop function according to P6.8	

Protective Functions, continued

PNU	ID	Access RUN	Value/Range	Description	Factory Setting (P1.3)
P8.4	709	X	—	**Stall protection**	1
				The stall protection function is an overload protection. It protects the motor from brief overloads (for example, blocked motor shaft). The stall current is equal to the motor rated operational current x 1.3, stall time is 15 seconds, and stall frequency limit is 25 Hz. If the current is higher than the limit and the frequency is less than 25 Hz, the drive will react as defined by this parameter **Note:** With long motor cable lengths and low motor power (poor efficiency cos φ), a higher (capacitive) motor current can flow causing early tripping. Solution: Motor reactor or sinus filter	
			0	Deactivated	
			1	Alarm (AL 15)	
			2	Fault (F… 15), stop function according to P6.8	
P8.5	713	X	—	**Underload protection**	0
				The underload protection monitors the load of the connected motor in the range of 5 Hz up to the maximum output frequency. This requires that the output current of the frequency inverter be monitored. A message will be generated if the values set in P8.12 and P8.13 are undershot within 20 seconds	
			0	Deactivated	
			1	Alarm (AL 17)	
			2	Fault (F…17), stop function according to P6.8	
P8.6	704	X	—	**Motor, temperature protection**	2
				The motor temperature protection is designed to protect the motor from overheating. It is based on a temperature algorithm and uses the motor current (P7.1) to determine the motor load (see figure on **Page 92**)	
			0	Deactivated	
			1	Alarm (AL 16)	
			2	Fault (F… 16), stop function according to P6.8	
P8.7	705	X	—	**Motor, ambient temperature**	40
			–20° to 100°C	—	
P8.8	706	X	—	**Motor, cooling factor at zero frequency**	40.0
			0.0–150%	The cooling factor of the motor with a zero frequency defines the relationship to the cooling of the motor at the rated frequency with the rated operational current without an external fan (see figure on **Page 92**)	
P8.9	707	X	—	**Motor, thermal time constant**	45
			1–200 min	The temperature time constant determines the time-span in which the heat calculation model achieves 63% of its end value. It depends on the design of the motor and is different from manufacturer to manufacturer. The larger the motor design, the greater the time constant	

Motor Heat Protection (P8.6–P8.9)

The motor temperature protection is based on a calculated temperature model and uses the motor current set in parameter P7.1 to determine the motor load. It does not use a temperature measurement in the motor.

The calculated temperature model cannot protect the motor if the cooling flow to the motor is influenced, for example, by a blocked air entry-way.

The temperature model is based on the assumption that the motor achieves a winding temperature of 284°F (140°C) at rated speed and an ambient temperature of 104°F (40°C), with 105% rated load.

The cooling efficiency, without external cooling, is a function of the speed (corresponding with the output frequency of the frequency inverter). When the motor is stationary (zero frequency), heat is also dissipated through the housing surface.

When the motor is under a great load, the current required by the motor can be higher than the rated operational current. The current provided by the frequency inverter can be higher than the rated operational current of the motor. If the load requires this much current, there is a danger of a thermal overload. This is especially the case at lower frequencies (<25 Hz). Here, the cooling effect (speed of the motor fan) and the load rating of the motor (see data sheet of the motor) are reduced similarly with lower frequencies. On motors that are equipped with an external fan, there is less of a load reduction at lower speeds.

With parameters P8.6 to P8.9, a motor temperature protection can be set for the M-Max frequency inverter which protects the motor from overheating. The temperature protection is calculated. A direct temperature measuring in the windings of the motor (see thermistor protection) offers great protection.

The reaction of the M-Max frequency inverter to a detected thermal overload can be set via parameter P8.6. At parameter P8.8 you can set the cooling output (P_{Cool}) on the motor at zero frequency (standstill). Note the specifications of the motor manufacturer.

Possible setting values are 0–150% of the cooling output at the rated frequency f_N (see nameplate of the motor = P7.6).

If the protection function is deactivated (P8.6 = 0), the temperature model of the motor is reset to zero.

The thermal current I_{th} corresponds with the load current at maximum thermal load rating on the motor. In continuous operation, at rated frequency (f_N = P7.6) and rated loading, the value of I_{th} corresponds with the rated operational current of the motor (see the motor rating plate = P7.1).

Motor Cooling Power

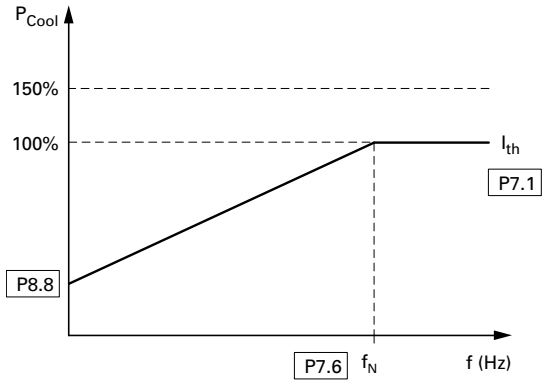

The time constant for the motor temperature (P8.9) defines how long it takes until the temperature has achieved 63% of its end value in the motor. In practice, this temperature time is constant depending on the type and design of the motor. It varies between the different design sizes at the same shaft power and between the different motor manufacturers.

The larger a motor is, the greater the time constant. The factory set value (P8.9 = 45 min) can be set in the range between 1 and 200 minutes. The guide value is twice t_6 time of a motor. The t_6 time defines the time in seconds in which a motor can be operated safely at six times the rated operational current (see data sheet of the motor, manufacturer specifications).

If the drive is stopped, the time constant is increased internally to three times the set parameter value (P8.9).

Calculation of Motor Temperature

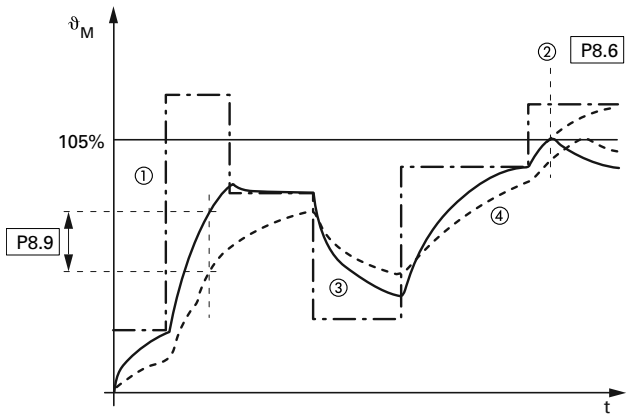

Notes

① Motor current I/I_T.
② Trip value shut-off (error message) or warning according to P8.6.
③ Calculated value for the motor temperature $Q = (I/I_T)^2 \times (1 - e^{-t/T})$.
④ Motor temperature ϑ_M (example).
P8.9 = Motor temperature time constant (T).

Protective Functions, continued

PNU	ID	Access RUN	Value/Range	Description	Factory Setting (P1.3)
P8.10	1430	X	—	**Analog minimum reference error, reaction time**	0.5
			0.0–10.0s	(see parameter P8.1)	
P8.11	1473	—	—	**(Not used)**	0
P8.12	714	✓	—	**Underload low torque limit**	60.0
			10–50%	Motor torque The underload protection enables faults such as a torn drive belt or the dry running of a pump to be detected without any additional sensors The reaction to a detected underload can be set at P8.5 The value set here determines the lowest permissible torque limit. This function can also be used with output frequencies that are above the cutoff frequency (P11.2, field weakening point) **Note:** The value set here is reset automatically to the factory setting (50.0%) if the parameter for the motor rated current (P7.1) is changed **Underload Limit** 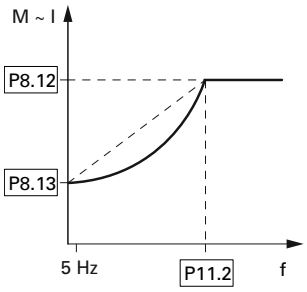	
P8.13	715	✓	—	**Underload, low torque limit at zero frequency**	10.0
			5–150%	Motor torque The value set here determines the lowest permissible torque limit at zero frequency (range 0–5 Hz) **Note:** The value set here is reset automatically to the factory setting (50.0%) if the parameter for the motor rated current (P7.1) is changed	

Protective Functions, continued

PNU	ID	Access RUN	Value/Range	Description	Factory Setting (P1.3)
P8.14	733	✓	—	**Fieldbus error**	2
				Reaction to a fieldbus error if the fieldbus is set as active control level (BUS) (P6.1 = 2, P6.17 = 2)	
			0	Deactivated	
			1	Alarm (AL 53)	
			2	Fault (F…53), stop function according to P6.8	
P8.15	734	✓	—	**Fieldbus interface error**	2
				Reaction to a fieldbus interface error (slot) at the frequency inverter or when the fieldbus interface card is missing when the fieldbus is set as active control level (BUS) (P6.1 = 2, P6.17 = 2)	
			0	Deactivated	
			1	Alarm (AL 54)	
			2	Fault (F…54), stop function according to P6.8	

PID Controller (P9)

The M-Max series frequency inverters are provided with a PID controller that you activate with P9.1 = 1. The controller can be deactivated via a digital input (P3.12).

PID control is superimposed on the frequency inverter function. You should therefore set all of the frequency inverter's drive-related parameters, such as maximum output frequency (motor speed), acceleration and deceleration ramps (mechanical load, belts). Frequency inverter and motor are process-integrated actuators. The output frequency to the motor (which determines the speed) is specified as manipulated variable from the PID controller.

When the PID controller is activated, the setpoints and actual values become process variables and are normalized automatically into percentages (%). For example, the specified setpoint (0–100%) here is the same as a volume flow (0–50 m^3/h). The actual value here is the volume flow (m^3/h) from a suitable sensor, which is evaluated again as a percentage (0–100%).

If this process data is to be displayed in the physical variable (m^3/h), you can set the conversion with parameter P9.19 (see "Display factor (P9.19)").

PID Controller

PNU	ID	Access RUN	Value/Range	Description	Factory Setting (P1.3)
P9.1	163	✓	—	**PID Controller**	0
			0	Deactivated	
			1	Activated for drive control	
			2	Activated for external application	
P9.2	118	✓	—	**PID controllers, P gain**	100
			0–1000%	Proportional Gain (KP) Low values attenuate the control action High values can cause oscillation	
P9.3	119	✓	—	**PID controller, I reset time**	10.0
			0–320s	Integral time constant	
P9.4	167	✓	—	**PID controller setpoint, keypad reference**	0.0
			0–100%	Setpoint setting range utilizing keypad as reference P9.5 = 0	
P9.5	332	✓	—	**PID controller, setpoint source**	0
			—	The setting range is limited by P6.3 (raised starting frequency) and P6.4 (end frequency)	
			0	Keypad (P9.4)	
			1	Fieldbus	
			2	AI1	
			3	AI2	

PID Controller, continued

PNU	ID	Access RUN	Value/Range	Description	Factory Setting (P1.3)
P9.6	334	✓	—	**PID controller, process variable (PV) source (Actual value or feedback)**	2
			0	Fieldbus	
			1	AI1 and S2, (see figure on **Page 39**) P2.1 = 0 (0 mA/0V) P2.1 = 1 (4 mA/2V)	
			2	AI2 and S3, (see figure on **Page 39**) P2.5 = 0 (0 mA/0V) P2.5 = 1 (4 mA/2V)	
P9.7	336	✓	—	**PID controller, actual value limiting, minimum**	0.0
			0–100%	—	
P9.8	337	✓	—	**PID controller, actual value limiting, maximum**	100.0
			0–100%	—	
P9.9	340	✓	—	**PID controller, controller deviation**	0
			0	Not inverted	
			1	Inverted Inverted PID control (P9.9 = 1) is used in applications in which the feedback value generator supplies an inverted signal Example: With increasing pressure, a pressure sensor output signal (+10V…0V = 0…max. bar) drops	
P9.10	132	✓	—	**PID controller, D rate time**	0.00
			0–10s	Differential time constant	
P9.11	1431	✓	—	**PID controller, output filter, delay time**	0.0
			0.00–10.00s	—	
P9.12	1016	✓	—	**Sleep mode, frequency**	0.00
			0–P6.4 Hz	The frequency inverter stops automatically if the frequency of the drive drops below the sleep level defined by this parameter for a longer period than the time defined by parameter P9.14	
P9.13	1018	✓	—	**Sleep mode, wake up setpoint**	25.0
			0.00–100%	The wake up setpoint defines the value which the PID controller process value (P9.6) must drop below before a RUN mode of the frequency inverter is restored.	
P9.14	1017	✓	—	**Sleep mode, delay time**	30
			0–3600s	This parameter determines the minimum period in which the frequency inverter must stay below the frequency set at P9.12 before the frequency inverter is stopped	

PID Controller, continued

PNU	ID	Access RUN	Value/Range	Description	Factory Setting (P1.3)
P9.15	1433	✓	—	**Hysteresis, upper limit**	0.0
			0.00–100%	The FBV (Feedback Value Check) message P5.1 (2.3) = 25 is output if the actual value in RUN mode is below the lower limit value P9.16. It stays active until: The actual value exceeds the upper limit value P = 9.15 The frequency inverter switches from RUN mode to STOP mode	
P9.16	1434	✓	—	**Hysteresis, lower limit**	0.0
			0.00–100%	See P9.15	
P9.17	1435	✓	—	**PID controller, max. controller deviation**	3.0
			0.00–100%	If the PID controller is activated (P9.1 = 1), and the deviation between the setpoint and the actual value exceeds the value entered here, the PID monitoring is activated. Setting at P5.1 (2.3) = 12	
P9.18	1475	✓	—	**PID controller, reference value scaling**	1
			0.1–32.7	Setpoint display, multiplication of a factor to display process-adjusted variables The value is displayed in M1.17	
P9.19	1476	✓	—	**PID controller, process variable scaling**	1
			0.1–32.7	Actual value indication, multiplication factor for displaying process variables The value is displayed in M1.18	
P9.20	1478	✓	—	**PID controller, output signal limit**	100.0
			0.00–100.0%	—	

Activating/Deactivating PID Controller

With a digital input (in FS DI6) configured as PID, PID control can be switched on and off through control signal terminals. When you activate the PID input, PID control is disabled. The frequency inverter then works with its standard frequency control again.

This function is available only when PID control is active (P9.1 = 1).

Do not switch the PID controller on and off while the frequency inverter is in RUN mode (RUN LED is lit).

Parameterize one of the digital inputs 1 to 6 as a PID, by setting the parameter (P3.12 = 1–6) (factory setting (P3.12 = 6).

The Activate/Disable PID Control function is optional. If you want PID control to be active all the time, you only need to set P9.1 = 1.

PID-System Deviation (OD)

The PID-system deviation (e) is the difference between reference and actual value (process variable PV).

The digital output configured as OD is activated if a freely selectable control deviation (P9.17) is exceeded with the PID controller (P9.1 = 1) active. The OD output stays activated until this limit value is exceeded.

If you wish to configure a parameterizable digital output or signalling relay as OD, you must set the limit value that activates the OD signal when exceeded at P9.17.

Action: Then parameterize one of the digital inputs as OD output by setting the value 12 at P5.1–P5.3.

Function Chart for OD (PID System Deviation)

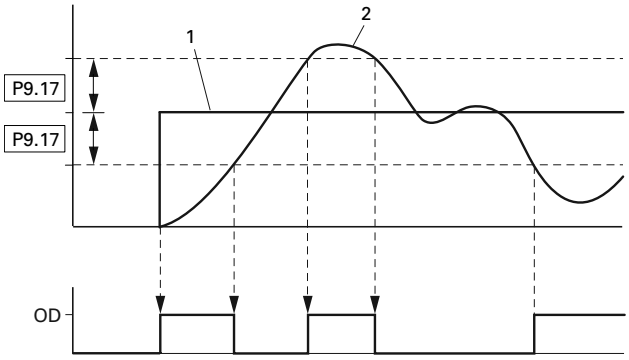

Item Number	Description
1	Setpoint value
2	Actual value

Feedback Value Check Signal (FBV)

The FBV (Feedback Value Check) signal is issued when:

- The actual value (PV) drops below the lower limit value (P9.16) in RUN mode. It remains active until:
- The actual value exceeds the upper limit value (P9.15)
- The frequency inverter changes from RUN mode to STOP mode (deceleration with the set ramp time)

PID Controller, Actual Value Message FBV

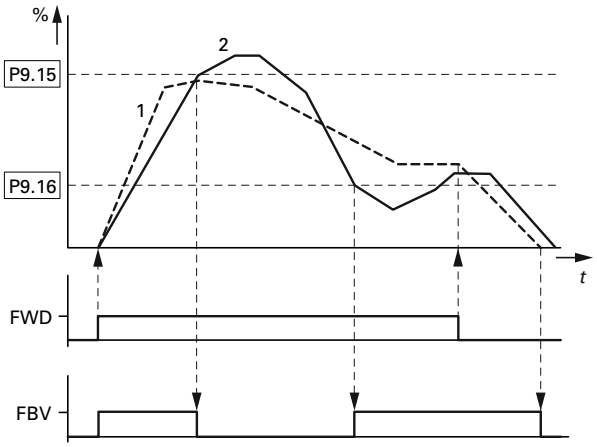

Item Number	Description
1	Output frequency (Hz)
2	Actual value (process variable PV)

FWD: Start signal, clockwise rotating field.
FBV: Actual value message, limit values exceeded (P9.15, P9.16).

The upper and lower actual value limits (P9.15, P9.16) are "process messages". They cannot be used for monitoring the actual value signal. FBV is not a fault message.

When P5.1–P5.3 = 25, you can set the digital output or a signalling relay for the FBV.

The FBV actual value message enables the M-Max PID controller to implement a direct "two-stage control", as is commonly used for HVAC applications.

Example: Ventilation system with two fans (frequency inverter). Under normal operating conditions, the maximum output power of fan 1 (M1) is sufficient to maintain the actual value (PV) at the reference value. When fan 1 is fully used and additional airflow is required, a second fan (M2) with constant power is a simple solution.

Block Diagram, Ventilation with "Two-Stage Control"

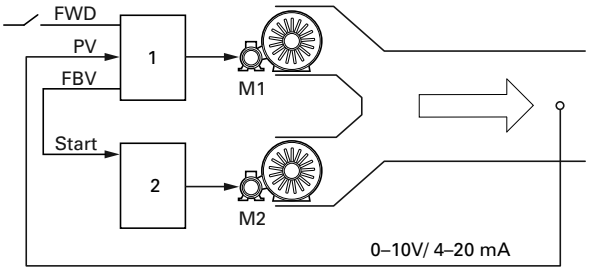

Item Number	Description
1	Frequency inverter with PID controller for M1 fan motor
2	Motor starter (frequency inverter, soft starter, contactor) for M2 fan motor

FWD: Start signal drive 1.
FBV: Actual value message of drive 1 for activating drive 2.
Start: Start signal, drive 2.

With the closed-loop control example shown here, the sequence is based on the signal diagram in the figure on this page. The process variables in the limit values are shown in percent (%). The output frequency (Hz) is shown superimposed in the same diagram.

- Start of fan motor M1 with FWD signal. The actual value (PV) is below the limit value of P9.16. The FBV output (P5.1–P5.3 = 25) then switches and fan motor M2 (Start) starts automatically
- The actual value rises and reaches the upper limit (P9.15). The FBV output is automatically switched off (= fan M2 Off). Fan M1 remains in operation and works in linear control mode. In a correctly set up system, this is the normal operating range
- If the actual value drops below the limit value (P9.16), the FBV output is switched. and fan M2 is activated again to support fan M1
- When the FWD signal is removed from frequency inverter 1, the inverter goes from RUN to STOP mode and decelerates the drive over the set ramp time
- When frequency inverter 1 is stopped, the FBV output is automatically de-energized so that fan M2 also stops

Fixed Frequency Setpoint Value (P10)

Fixed frequencies have a higher priority than frequency reference values. They can be called individually, binary coded, or via the digital inputs DI1 to DI6 or via the sequencing control program.

The maximum permitted set value for a fixed frequency is limited by parameter P6.4 (maximum frequency).

A fixed frequency value can go below a minimum limit frequency set at parameter P6.3.

The fixed frequency values can be changed during operation (RUN).

Fixed Frequency

You can set eight different fixed frequency setpoints (FF0 to FF7) in the P10 parameter group.

Fixed Frequencies FF1, FF2 and FF3 (= FF1 + FF2)

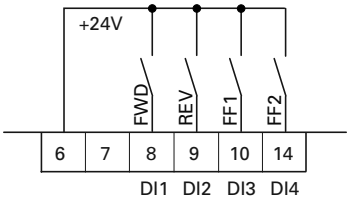

The fixed frequencies FF1 = 10 Hz, FF2 = 15 Hz and FF3 = 20 Hz can be called via digital inputs DI3 (control signal terminal 10) and DI4 (control signal terminal 14) in the factory setting.

Fixed Frequency

Input (Binary)			Fixed Frequency
B0	B1	B2	(Factory setting)
—	—	—	FF0, P10.1 = 5 Hz, only if P6.2 = 0
X	—	—	FF1, P10.2 = 10 Hz
—	X	—	FF2, P10.3 = 15 Hz
X	X	—	FF3, P10.4 = 20 Hz
—	—	X	FF4, P10.5 = 25 Hz
X	—	X	FF5, P10.6 = 30 Hz
—	X	X	FF6, P10.7 = 40 Hz
X	X	X	FF7, P10.8 = 50 Hz

The change between the individual fixed frequency values is completed with the acceleration and deceleration times set at P6.5 and P6.6. When the FWD or REV enables are switched off, the output frequency is immediately blocked (uncontrolled coasting). P6.8 = 1 causes the drive to perform a controlled deceleration **[1]**.

Example: Activation of the Fixed Frequencies in the Factory Setting with Acceleration and Deceleration Ramps

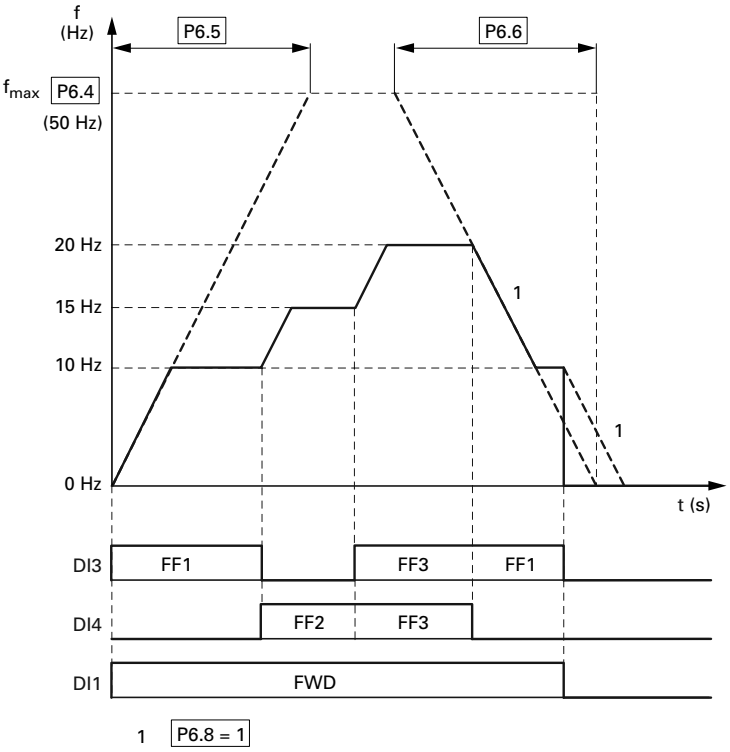

Fixed Frequency Setpoint Value

PNU	ID	Access RUN	Value/Range	Description	Factory Setting (P1.3)
P10.1	124	✓	—	**Fixed frequency FF0**	6.00
			0.00–P6.4	0.00 Hz up to the maximum frequency value (P6.4) This value is only active if the setpoint input has been set to parameter P6.2 = 0	
P10.2	105	✓	—	**Fixed frequency FF1**	12.00
			0.00–P6.4	0.00 Hz up to the maximum frequency value (P6.4) In the factory setting, this value can be called directly via DI3 (control signal terminal 10)	
P10.3	106	✓	—	**Fixed frequency FF2**	18.00
			0.00–P6.4	0.00 Hz up to the maximum frequency value (P6.4) In the factory setting, this value can be called directly via DI4 (control signal terminal 14)	
P10.4	126	✓	—	**Fixed frequency FF3**	24.00
			0.00–P6.4	0.00 Hz up to the maximum frequency value (P6.4) In the factory setting, this value can be called directly by joint actuation of control signal terminals 10 and 14 (DI3 and DI4)	
P10.5	127	✓	—	**Fixed frequency FF4**	30.00
			0.00–P6.4	0.00 Hz up to the maximum frequency value (P6.4) For activation, parameter P3.11 must be assigned a third digital input. For example, P3.11 = 5: DI5 (control signal terminal 15) This value can then be called up directly via DI3 **Note:** In the factory setting, DI5 (control signal terminal 15) is assigned with the error acknowledgement (Reset). Setting P3.11 = 0 is recommended	
P10.6	128	✓	—	**Fixed frequency FF5**	36.00
			0.00–P6.4	0.00 Hz up to the maximum frequency value (P6.4) For activation, parameter P3.11 must be assigned a third digital input. For example, P3.11 = 5: DI5 (control signal terminal 15), see Note on P10.5) This value can be called directly by joint actuation of control signal terminals 10 (DI3) and 15 (DI5)	
P10.7	129	✓	—	**Fixed frequency FF6**	48.00
			0.00–P6.4	0.00 Hz up to the maximum frequency value (P6.4) For activation, parameter P3.11 must be assigned a third digital input. For example, P3.11 = 5: DI5 (control signal terminal 15) see Note on P10.5) This value can be called directly by joint actuation of control signal terminals 14 (DI4) and 15 (DI5)	
P10.8	130	✓	—	**Fixed frequency FF7**	60.00
			0.00–P6.4	0.00 Hz up to the maximum frequency value (P6.4) For activation, parameter P3.11 must be assigned a third digital input. For example, P3.11 = 5: DI5 (control signal terminal 15), see Note on P10.5) This value can be called directly by joint actuation of control signal terminals 10 (DI3), 14 (DI4) and 15 (DI5)	

Sequence Control

The sequence control enables a cyclical program sequence with the fixed frequency setpoints FF0 to FF7. To run the program you can also select from four different operating modes and assign rotation direction (FWD/REV) and run time to the individual fixed frequencies. The program sequence is programmed in binary code and is represented by a decimal number for simple entry.

Fixed Frequency Setpoint Value, continued

PNU	ID	Access RUN	Value/Range	Description	Factory Setting (P1.3)
P10.9	1436	✓	—	**PLC Sequence control, operating mode**	0
				Selection of operating modes for cyclical program execution The start of the program execution via a digital input (DI1–DI6) is executed according to parameter P3.21 The pause of the program execution via a digital input (DI1–DI6) is executed according to parameter P3.22	
			0	Deactivated	
			1	Execute program cycle once	
			2	Execute program cycle continuously	
			3	Execute program cycle in steps	
			4	Execute program cycle continuously in steps	
P10.10	1437	✓	—	**PLC Sequence control, program (FWD/REV)**	0
			0–255	Summated decimal value from the binary coded program sequence (see table below)	

The table below shows the parameters of the fixed frequencies (P10.1–P10.8) with the associated run times (P10.11–P10.18) and the corresponding values in binary and decimal format.

Depending on the selected rotating field direction (FWD/REV), the decimal value is multiplied by 0 (= FWD) or 1 (= REV). The sum of all decimal values forms the program number for parameter P10.10.

Determining the Program Number (P10.10)

	Fixed Frequency		Values				Example A		Example B	
	Hz	s	Binary	Decimal	FWD	REV	(See Figure on Page 104)		(See Figure on Page 105)	
FF0	P10.1	P10.11	2^0	1	0	1	FWD	0	FWD	0
FF1	P10.2	P10.12	2^1	2	0	1	FWD	0	FWD	0
FF2	P10.3	P10.13	2^2	4	0	1	FWD	0	FWD	0
FF3	P10.4	P10.14	2^3	8	0	1	FWD	0	FWD	0
FF4	P10.5	P10.15	2^4	16	0	1	FWD	0	FWD	0
FF5	P10.6	P10.16	2^5	32	0	1	FWD	0	FWD	0
FF6	P10.7	P10.17	2^6	64	0	1	FWD	0	REV	64
FF7	P10.8	P10.18	2^7	128	0	1	FWD	0	REV	128
				Sequence control, program (FWD/REV): P10.10 =				0		192

The fixed frequencies (FF0–FF7) are only active if the run times (P10.11–P10.18) of the associated parameters are set (>0s).

The run times in the individual program steps must be greater than the transition times for the subsequent frequency value. Example as per figure on **Page 104** (Example A):

Acceleration time P6.5 = 3.0s

Maximum frequency P6.4 = 60 Hz

FF1: P10.2 = 20 Hz

FF2: P10.3 = 40 Hz

$$t_{FF} \geqq \frac{\triangle FF \times P6.5}{P6.4}$$

$$P10.13 \geqq \frac{(P10.3 – P10.4) \times P6.5}{P6.4} \geqq \frac{(40\ Hz – 20\ Hz) \times 3s}{60\ Hz} \geqq 1s$$

The transition time from FF1 to FF2 is one second. Parameter P10.13 should therefore be set to a value greater than one second.

Fixed Frequency Setpoint Value

PNU	ID	Access RUN	Value/Range	Description	Factory Setting (P1.3)
P10.11	1438	✓	—	**Set time for FF0**	0
			0–1000s	0s = Fixed frequency FF0 deactivated (sequence control P10.9)	
P10.12	1439	✓	—	**Set time for FF1**	0
			0–1000s	0s = Fixed frequency FF1 deactivated (sequence control P10.9)	
P10.13	1440	✓	—	**Set time for FF2**	0
			0–1000s	0s = Fixed frequency FF2 deactivated (sequence control P10.9)	
P10.14	1441	✓	—	**Set time for FF3**	0
			0–1000s	0s = Fixed frequency FF3 deactivated (sequence control P10.9)	
P10.15	1442	✓	—	**Set time for FF4**	0
			0–1000s	0s = Fixed frequency FF4 deactivated (sequence control P10.9)	
P10.16	1443	✓	—	**Set time for FF5**	0
			0–1000s	0 s = Fixed frequency FF5 deactivated (sequence control P10.9)	
P10.17	1444	✓	—	**Set time for FF6**	0
			0–1000s	0s = Fixed frequency FF6 deactivated (sequence control P10.9)	
P10.18	1445	✓	—	**Set time for FF7**	0
			0–1000s	0s = Fixed frequency FF7 deactivated (sequence control P10.9)	

Example A

P10.9 = 1: Execute program cycle once.

P10.10 = 0 (see **Page 102**): The fixed frequencies FF0 to FF7 (P10.1–P10.8) are set in numerical order with the associated run times (P10.10–P10.18) and rotating direction (FWD) as setpoint.

The start command (RUN) for the sequence control is set via the digital input (DI1–DI6) defined at parameter P3.21. It has a higher priority than other start commands. This also applies to the fixed frequency setpoints of the sequence control compared to setpoint sources.

WARNING

If a start command is present at a digital input (DI1–DI6) assigned at P3.21, the sequence control also starts automatically (without switch edge) when the power supply is switched on (for example, after a power supply failure).

If the start command (RUN) is switched off during the program cycle, the drive stops according to the settings at P6.8. The program sequence is then ended immediately. A renewed start command begins once more with the first fixed frequency.

A digital input (DI1–DI6) can be assigned the "Pause sequence control" function at parameter 3.22. The program sequence is then stopped and can then be resumed from this stopping point (fixed frequency).

The operating states of the sequence control can be displayed via the digital outputs RO1, RO2 and DO.

The following assignments are shown in example A:

- Relay RO1 (P5.1 = 16) signals the operation (RUN) of the sequence control. It switches on with the start command and then off after one completed program cycle (P10.9 = 1, P10.9 = 3) at the end of the program cycle (P5.3 = 18)
- **[1]** With a continuous program sequence (P10.9 = 2, P10.9 = 4), the start signal is switched off first (P3.21)
- Relay RO2 (P5.2 = 17) indicates the end of the individual run times (P10.11–P10.18)
- Transistor DO (P5.3 = 18) indicates the end of a program cycle

Value 19 (for example, P5.3 = 19) enables a pause command (P3.22) of the sequencing control to be indicated via a digital output.

Example A, Program Cycle Executed Once (P10.9 = 1, P10.10 = 0)

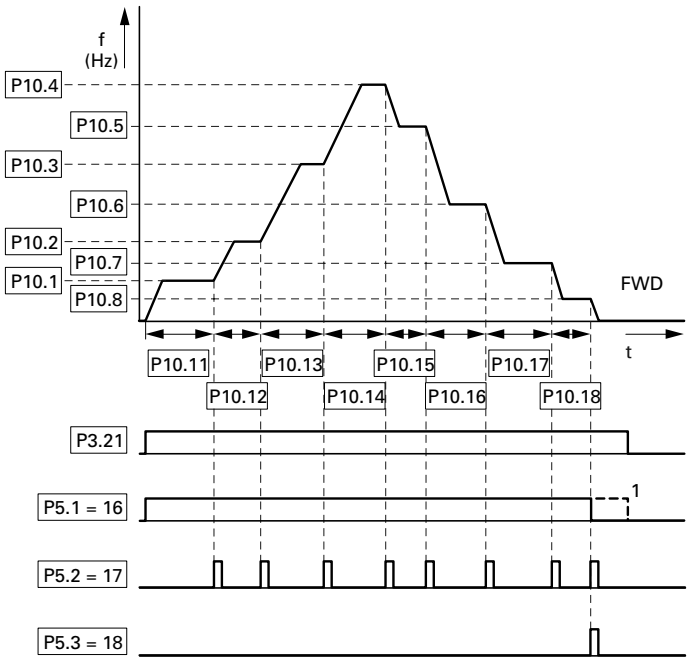

Example B

Comparable example A.

P10.9 = 1: Execute program cycle once.

P10.10 = 192 (see **Page 102**): This decimal program code (192 = 64 +128) assigns the clockwise rotating field (REV) to fixed frequencies FF6 (P10.7) and FF8 (P10.8).

Example B, Program Cycle Executed Once (P10.9 = 1, P10.10 = 192)

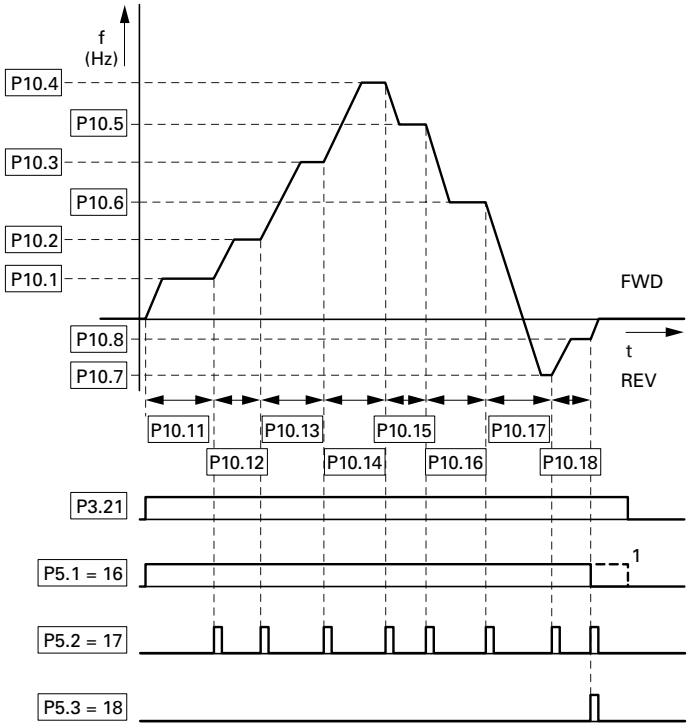

Example C

Comparable example A.

P10.10 = 0

P10.9 = 2: Execute program cycle once in steps.

Each fixed frequency (P10.1–P10.10) is called individually in the program sequence. After the assigned run times (P10.11–P10.18) have elapsed, the output frequency is set to zero according to the Stop function (P6.8) before the next numerically fixed frequency value is executed.

A clockwise rotating field (REV) can also be assigned here to the individual fixed frequencies as a decimal program number at parameter P10.10 (see **Page 102**).

Example C, Program Cycle Executed Once in Steps (P10.9 = 2, P10.10 = 0)

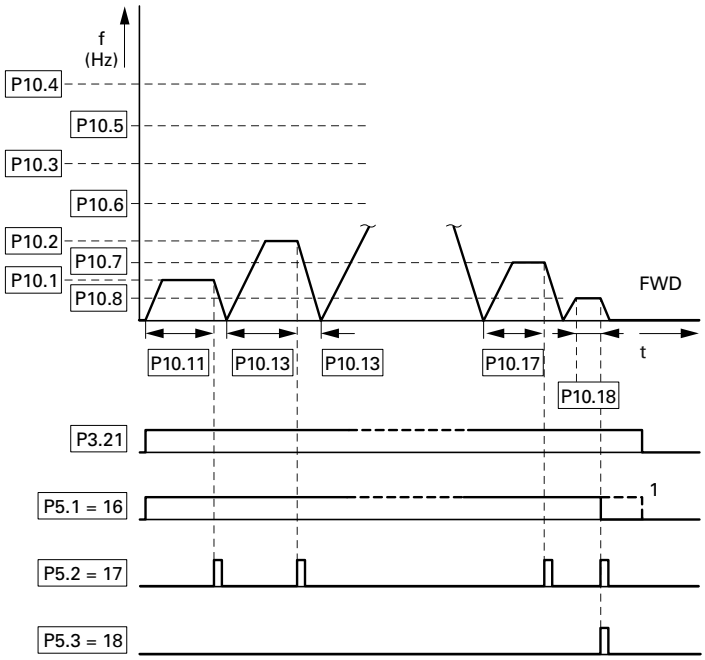

V/Hz-Characteristic Curve (P11)

The M-Max series frequency inverters operate with a sinusoidal pulse width modulation (PWM) in the inverter. The IGBTs are actuated by two V/f-based control procedures that you can select in parameter P11.8.

P11.8 = 0:

- Frequency control (Hz)
- Parallel connection of several motors
- Large power difference (P_{FU} >> P_{Motor})
- Switching in the output

P11.8 = 1:

- Speed control (RPM, min^{-1}) with slip compensation
- Single operation (only one motor), maximum one power rating smaller
- High torque (requirement: exact motor data for the motor calculation model)

The V/f characteristic (voltage/frequency characteristic) represents a control procedure of the frequency inverter in which the motor voltage is controlled in a specific ratio to the frequency. If the voltage/frequency ratio is constant (linear characteristic), the magnetizing flux and the torque behavior of the connected motor is virtually constant.

In the standard application, the benchmark values for the V/Hz-characteristic curve correspond with the rated operational data of the connected motor (see the motor ratings plate):

- Cut-off frequency P11.2 = Rated motor frequency P7.6 = Maximum frequency P6.4
- Output voltage P11.3 = Nominal motor voltage P7.5

The rating data of the V/Hz-characteristic curve is assigned automatically and corresponds with the values of parameter P7.5 (nominal motor voltage) and P7.6 (rated motor frequency).

If you require other values for the V/Hz-characteristic curve, you must first set parameters P7.5 and P7.6, before you change the parameters of the V/Hz-characteristic curve shown here.

V/Hz-Characteristic Curve

PNU	ID	Access RUN	Value/Range	Description	Factory Setting (P1.3)
P11.1	108	X	—	**V/Hz characteristic curve**	0
			0	Linear	
				The output voltage changes linearly with the output frequency; from zero to voltage P11.3 with the cut-off frequency P11.2 By defining a minimum frequency (P6.3), a voltage corresponding with one of the linear characteristic curves is output The V/Hz ratio running linearly between zero and the cut-off frequency remains constant With parameter P11.6, the voltage value can be raised by percentages in a linear V/Hz-ratio over the entire manipulating range	
			1	Squared	
				The output voltage changes quadratically with the output frequency; from zero to voltage P11.3 with the cut-off frequency P11.2 By defining a minimum frequency P6.3, a voltage corresponding with one of the quadratic characteristic curves is output. The V/Hz ratio running quadratically between zero and the cut-off frequency remains constant With parameter P11.6, the voltage value can be raised as a percentage by a quadratic V/Hz ratio over the entire manipulating range	
			2	Configurable	
				In connection with parameters P11.4, P11.5 and P11.6, the V/Hz ratio and therefore the parameters for characteristic curve progress can be defined as required	

V/Hz-Characteristic Curve (P11.1)

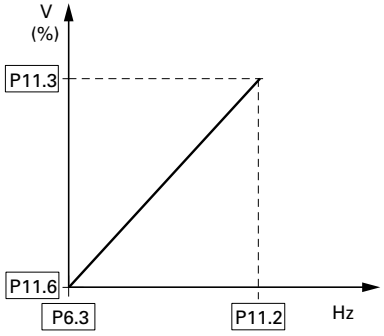

Characteristic Curve: V/Hz (P11.1) Linear

P11.1 = 0

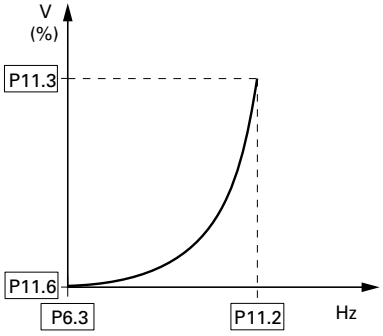

Squared

P11.1 = 1

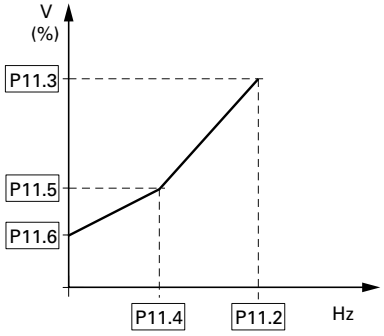

Configurable

P11.1 = 2

V/Hz-Characteristic Curve, continued

PNU	ID	Access RUN	Value/Range	Description	Factory Setting (P1.3)
P11.2	602	X	—	**Cut-off frequency**	60.00
			30–320 Hz	The output voltage reaches its maximum rated value P11.3 with the cut-off frequency. For example: 400V at 50 Hz If the maximum output frequency (P6.4) is set to higher values, the output voltage remains constant as of the cut-off frequency defined here As of this cut-off frequency, the voltage/frequency ratio is no longer constant. The magnetization of the connected motor is reduced with increasing frequency (field weakening range) **Example: Linear V/Hz Characteristic Curve with Cut-Off Frequency and Field Weakening Range** 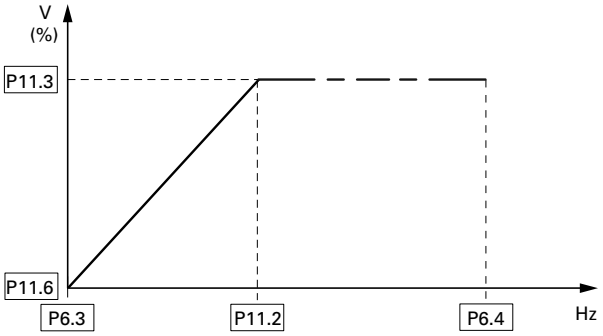 	
P11.3	603	X	—	**Output voltage**	100.00
			10–200%	Input voltage In the standard application, the value set here is equal to 100% of the input voltage supply and corresponding with the nominal motor voltage set under P7.5 (see the motor ratings plate)	

V/Hz-Characteristic Curve, continued

PNU	ID	Access RUN	Value/Range	Description	Factory Setting (P1.3)
P11.4	604	X	—	**V/Hz characteristic curve, mean frequency value**	60.00
			0.00–P11.2 (Hz)	Definition of a frequency value for the voltage value set under P11.5 Defined ratio (break-point) for the defined V/Hz-characteristic curve (P11.1 = 2, see characteristic P11.1 = 2)	
P11.5	605	X	—	**V/Hz characteristic curve, mean voltage value**	100.00
			0.00–P11.3	Definition of a voltage value for the frequency value set under P11.4 Defined ratio (break-point) for the defined V/Hz-characteristic curve (P11.1 = 2, see characteristic P11.1 = 2)	
P11.6	606	X	—	**Output voltage at 0 Hz**	0.00
			0.00–40.00%	Definition of a start voltage at 0 Hz (zero frequency voltage) **Note:** A high start voltage enables a high torque at the start ⚠ **Caution:** A high torque at low speed causes a high thermal load on the motor. If temperatures are too high, the motor should be equipped with an external fan	
P11.7	109	X	—	**Torque increase**	0
			0	Deactivated	
			1	Enabled Automatic increase of the output voltage (Boost) with an increased load and low speed (for example, heavy starting duty) ⚠ **Caution:** A high torque at low speed leads to a high thermal load on the motor **Note:** If temperatures are too high, the motor should be fitted with an external fan	
P11.8	600	X	—	**Control mode**	0
			0	Frequency control (V/Hz) The setpoint entry controls the output frequency of the frequency inverter (resolution of the output frequency = 0.01 Hz) **Note:** In this mode, multiple motors, with varying outputs, can be connected in parallel in the output of the frequency inverter	
			1	Speed control with slip compensation (vector) The setpoint entry controls the motor speed depending on the load torque (calculation by motor model) **Note:** In this mode, only one motor with the assigned power (current) may connected in the output of the frequency inverter **Note: The speed control requires a precise electrical reproduction of the connected motor.** The motor ratings plate information must be set in the parameter group P7 in this case	

On the constant three-phase AC supply, the three-phase asynchronous motor has a constant rotor speed (n_1, P7.3, rating plate specifications) according to the number of pole pairs and input frequency. The slip here represents the difference between the rotating field of the stator and that of the rotor. In static operation, the slip is constant.

Load changes **[1]** at the motor shaft cause a larger slip (△n) and thus a reduced rotor speed **[2]**. In controlled operation (V/f-characteristic), the frequency inverter cannot compensate this load-related speed difference. The speed behavior of the motor is even, as in a constant AC supply.

Speed Behavior without Slip Compensation

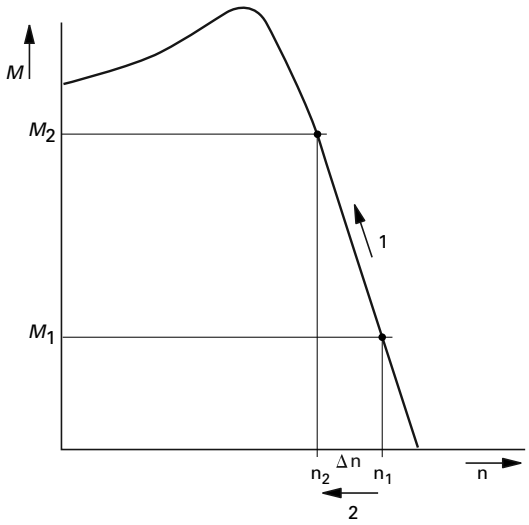

In "Speed control" mode (P11.8 = 1), the frequency inverter can compensate these load-related deviations. From the measured voltage and current values of the stator winding (u_1, i_1) the internal motor model calculates the required manipulated variables for the flux variable i_μ and the torque variable i_W. In the equivalent circuit diagram of the three-phase motor, the load-related slip is shown as the resistance R'_2/s. In idle operation without a load, this resistance approaches infinity, and approaches zero as the load increases.

Equivalent Circuit Diagram for an Asynchronous Motor

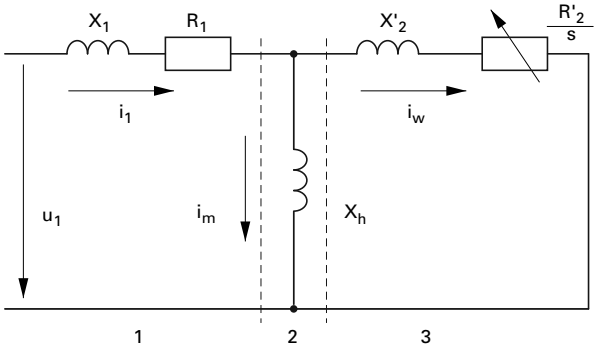

Item Number	Description
1	Stator winding
2	Air gap
3	Transformed rotor winding

An exact calculation requires the precise rating specifications of the motor (parameter group 7). The speed control (P11.8 = 1) can then compensate the load-related slip deviations. The simple illustration shows that, as the load torque increases **[1]**, the resulting speed reduction is compensated by an increase in the output frequency **[2]** (see figure below).

Speed Behavior with Slip Compensation

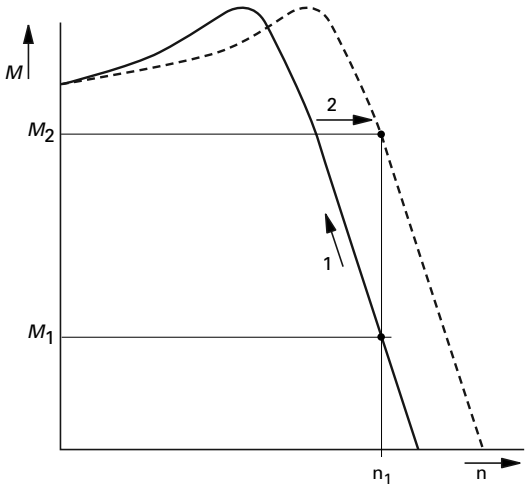

V/Hz-Characteristic Curve, continued

PNU	ID	Access RUN	Value/Range	Description	Factory Setting (P1.3)
P11.9	601	X	—	**Carrier frequency**	6.0
			1.5–16.0 kHz	Using a high switching frequency can reduce the magnetization noise in the motor The heat dissipation in the inverter (IGBT) increases with higher switching frequencies With motor frequencies <5 Hz a higher speed stability can be achieved at low switching frequencies **Note:** As a protection against thermal overload, MMX reduces the switching frequency automatically if, for example, too high values are set and with high ambient temperatures and high load currents Parameter P11.10 = 1 must be set for operation at a constant carrier frequency	
P11.10	522	X	—	**Sine-wave filter (constant carrier frequency)**	0
			0	Deactivated	
			1	Enabled **Note:** When using a sinusoidal filter, the carrier frequency must be constant	

Braking (P12)

In parameter group P12 you can set different brake functions:

- DC braking
- Generative braking (brake chopper)
- Mechanical braking (actuation)

The brake functions allow you to reduce undesired coasting and long coasting times. Mechanical braking also ensures safe operating states.

DC Braking

With DC braking, the frequency inverter supplies the three-phase stator winding of the three-phase motor with DC current. This generates a stationary magnetic field which in turn induces voltage in the rotor while the rotor is in motion. As the electrical resistance of the rotor is very low, even small induction can generate high rotor currents and thus a strong braking effect.

As the speed decreases, the frequency of the induced voltage reduces and therefore the inductive resistance also. The ohmic resistance becomes more effective and thus increases the braking effect. However, the generated braking torque drops off abruptly before the rotor is at a standstill and disappears completely as soon as the rotor movement has ended.

DC braking is therefore not suitable for holding loads, nor for intermediate braking. Once DC braking has been activated, the motor comes to a standstill.

CAUTION

Debounced inputs may not be used in the safety circuit diagram. DC braking results in additional heating of the motor. Configure the brake torque, set via braking current (P12.1) and the braking duration (P12.2 and P12.4), as low as possible.

Braking

PNU	ID	Access RUN	Value/Range	Description	Factory Setting (P1.3)
P12.1	507	X	—	**DC braking, current**	I_e
			0.2 x I_e–2 x I_e (A)	Set value for the DC current, which supplies the motor during the DC braking The value depends on the rated operational current I_e of the frequency inverter The parameter is only active, if a value >0 has been entered for P12.2 or P12.4	
P12.2	516	X	—	**DC braking, braking time at start**	0.00
			0.00–600.00s	The braking time of the DC braking **[1]** is activated with the start command (FWD, REV)	

Braking Time at Start

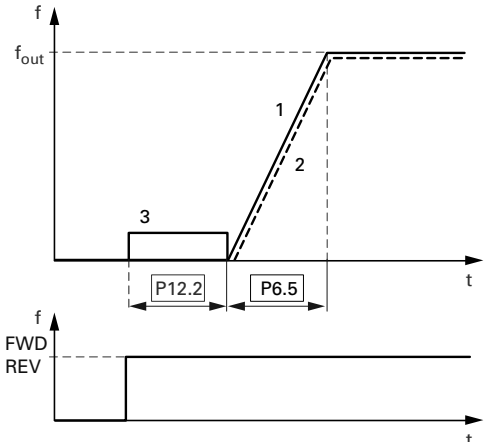

After the time set has elapsed, the frequency inverter starts automatically with the acceleration time set at P6.5. The speed of the motor **[2]** follows the characteristic of the output frequency **[3]**

Braking, continued

PNU	ID	Access RUN	Value/Range	Description	Factory Setting (P1.3)
P12.3	515	X	—	**DC braking, start frequency**	1.50
			0.00–10.00 Hz	The output frequency (f_{Out}) set here automatically activates the DC braking after a stop command (FWD/REV switched off) Requirement: P6.8 = 1 (Stop function ramp) The output frequency **[1]** is reduced after the stop command according to the deceleration time set at P6.6. Depending on inertia and the load torque, the speed of the motor **[2]** is reduced accordingly and braked with DC current at the frequency value set here You can set the duration of the DC braking **[3]** under P12.4	

Start Frequency During Relay Ramp

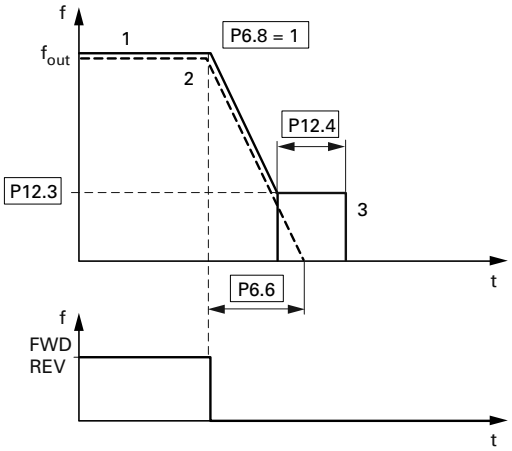

Braking, continued

PNU	ID	Access RUN	Value/Range	Description	Factory Setting (P1.3)
P12.4	508	X	—	**DC braking, braking time at STOP**	0.00
			0.00–600.00s	Duration of DC braking after the stop command With P6.8 = 1 (Stop function ramp), the activation of the DC braking occurs with the output frequency set under P12.3 with the braking time set here With P6.8 = 0 (free run-out), the activation of the DC braking **[3]** occurs directly with the stop command. If the output frequency **[1]** is greater than or equal to the rated motor frequency (P7.6), the value set here is considered for the duration of the braking time If the output frequency is less than or equal to 1% of the rated motor frequency (P7.6), the duration for DC braking is reduced respectively to 10% of the value set here	

Braking Time in Case of Stopping

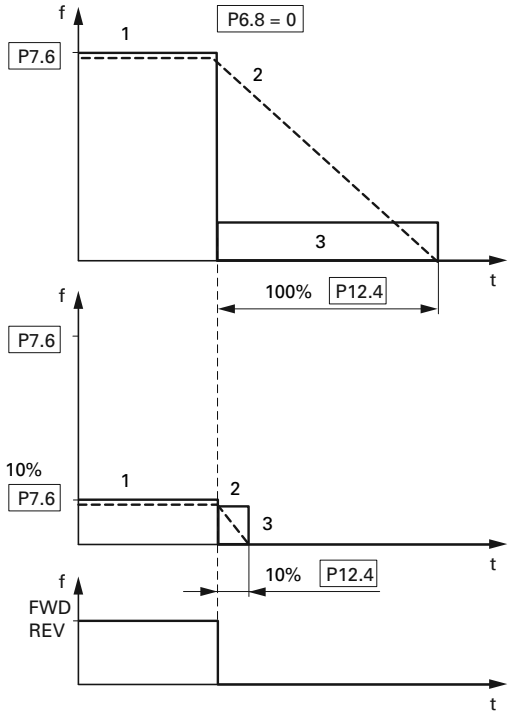

Regenerative Braking

If the rotor of an asynchronous motor is driven oversynchronously in the direction of the rotating field, it generates electric power via its stator windings. The motor becomes a generator. In the frequency inverter, this generative energy causes an increase in the DC link voltage.

Oversynchronous speeds occur, for example, when the output frequency in frequency inverter operation is reduced with short deceleration times, the connected machine has a large flywheel mass, or when the flowing medium in pumps and fans works against the speed reduction.

The rise in the DC link voltage is monitored by the M-Max frequency inverter and always enables a braking torque of around 30% of the motor rated torque. A higher braking torque can be achieved by selecting a more powerful frequency inverter. From the 1.1 kW (3.3A at 400V = MMX34AA3D3_) rating, the internal brake chopper with an external power resistor enables up to 100% of the rated motor torque.

Regenerative Braking with External Braking Resistor

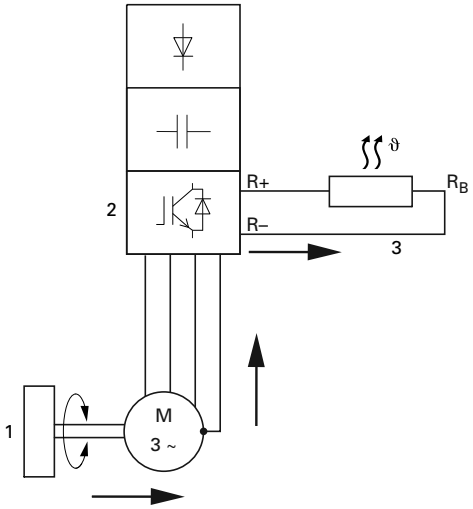

Item Number	Description
1	Machine flywheel mass
2	Inverter with brake chopper (brake transistor)
3	Brake resistor (RB) See Energy Flow (brake torque)

The brake chopper can be activated at parameter P12.5. This function is only activated with the three-phase frequency inverters MMX34…3D3_ (3.3A) to MMX34…014_ (14A). These ratings have an internal brake transistor that can dissipate excess brake energy via an external power resistor (connection terminals R+ and R–) when large flywheel masses or short deceleration times are involved.

This parameter is not visible with frequency inverters without a braking transistor.

Braking, continued

PNU	ID	Access RUN	Value/Range	Description	Factory Setting (P1.3)
P12.5	504	X	—	**Brake chopper**	0
			0	Brake-chopper deactivated	
			1	Automatic activation in operation (RUN)	
			2	Automatic activation in operation (RUN) and upon stop (STOP)	
P12.6	1447	X	—	**Brake chopper, DC bus switching threshold**	765
			0–870V	This function is only active with the three-phase frequency inverters MMX34…3D3_ (3.3A) to MMX34…014_ (14A) The switching threshold for the brake transistor should always be above the maximum DC link voltage For example, allowing for the maximum permissible input voltage peak of 10%: U_{LN} = 400 Vac U_{LN} +10% = 400 Vac = 440 Vac U_{DC} = 1.35 x U_{LNmax} = 1.35 x 440V = 594 Vdc (maximum permissible DC link voltage in motor operation) Allowing for an energy absorption from the DC link of around 30% during braking, the on threshold here for the braking transistor should be set to around 780V **Note:** Lower values for the on threshold will switch on the braking resistor earlier so that it is subject to a greater load The DC link voltage is shown at M1.8. In practice, the value of the DC link voltage is around 565V at U_{LN} = 400V	

Mechanical Brake (Actuation)

The actuation of an external mechanical brake can be implemented via one of the digital outputs (see "Digital Outputs (P5)" on **Page 78**), if the value 26 (= External brake actuated) is assigned:

- Transistor output DO: control signal terminal 20 (DO–), supply voltage control signal terminal 13 (DO+), maximum 48 Vdc/50 mA, Parameter 5.3
- Relay RO1: N/O contact control signal terminal 22 (R13) and 23 (R14), maximum 250 Vac/2A or 250 Vdc/0.4A, Parameter P5.1
- Relay RO2: changeover contact, control signal terminal 25 (R21), 24 (R22) and 26 (R24), maximum 250 Vac/2A or 250 Vdc/0.4A, Parameter P5.2

Mechanical Brake

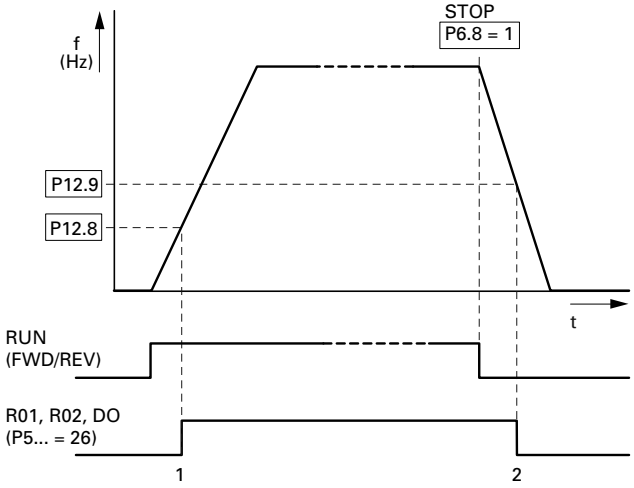

Item Number	Description
1	Brake, released
2	Brake activates and brakes the drive mechanically

Braking, continued

PNU	ID	Access RUN	Value/Range	Description	Factory Setting (P1.3)
P12.7	1448	X	—	**External brake, delay time opening**	0.2
			0.00–320.00s	Condition: RUN (Start enable) After the time set here has elapsed, the brake is actuated (P5._ is opened)	
P12.8	1449	X	—	**External brake, frequency threshold opening**	1.50
			0.00–P6.4 Hz	Condition: RUN (Start enable) If the frequency set here is exceeded, the brake is actuated (P5._is opened)	
P12.9	1450	X	—	**External brake, frequency threshold closing**	1.50
			0.00–P6.4 Hz	If the frequency goes below the value set here, the brake is actuated (P5._ is closed)	
P12.10	1451	X	—	**External brake, frequency threshold REV closing**	1.50
			0.00–P6.4 Hz	—	
P12.11	1452	X	—	**External brake, current limit, opening**	0.00
			0.00–P7.2A	Condition: RUN (Start enable) On reaching the current value set here, the brake is actuated (P5._ is opened)	

Logic Function (P13)

The logic function enables you to link both parameters P13.1 **(A)** and P13.2 **(B)** logically with each other. The result (LOG) can then be assigned to the digital outputs DO (P5.3), RO1 (P5.1) and RO2 (P5.2). The type of operation (And, Or, Exclusive-Or) is defined in parameter P13.3.

Logic Linking of A and B

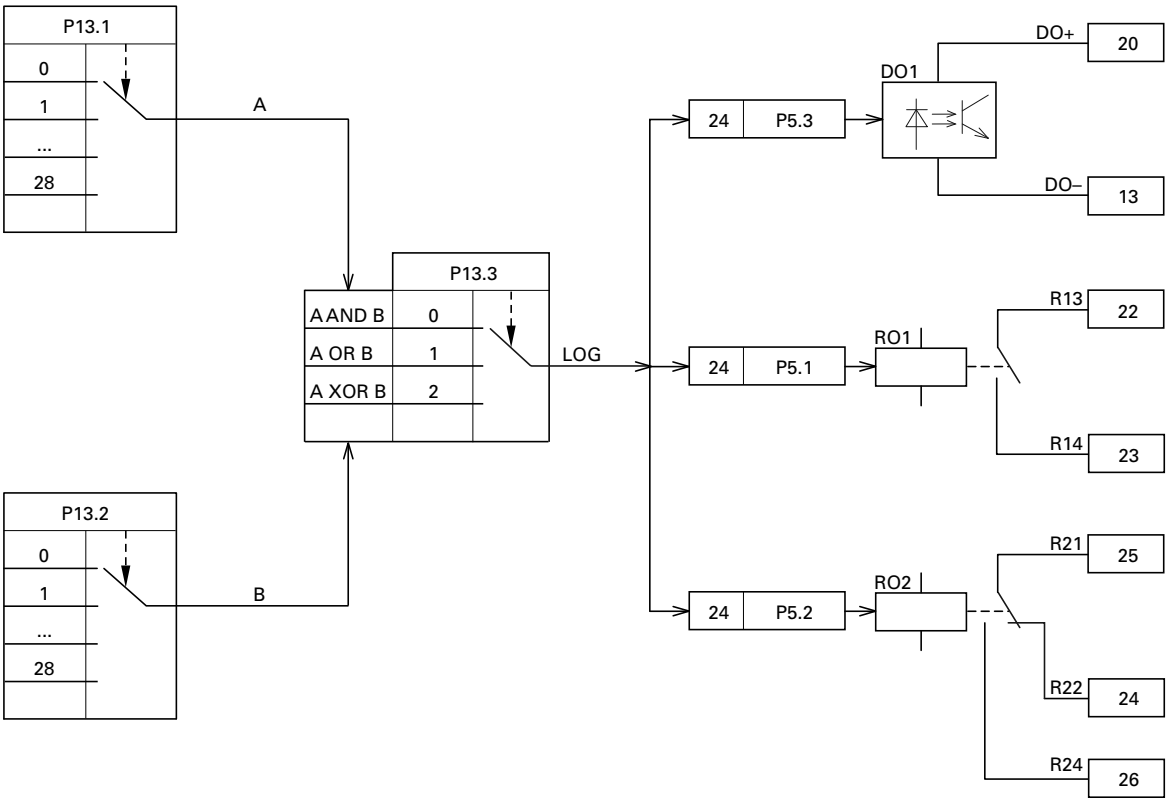

Example: Digital output RO1 (N/O contact R13/R14) is required to indicate during operation that the set current limit has been reached:

P5.1 = 24, LOG function fulfilled
P13.1 = 2, Operation (RUN), signal A
P13.2 =27, Current monitoring, signal B
P13.3 = 0, A AND B

Logic Function

PNU	ID	Access RUN	Value/Range	Description	Factory Setting (P1.3)
P13.1	1453	X	—	**LOG function, Selection input A**	0
				Value range for signal A	
			0	Deactivated	
			1	READY, the frequency inverter is ready for operation	
			2	RUN, the inverter of the frequency inverter is enabled (FWD, REV)	
			3	FAULT, error message Error detected (= STOP)	
			4	Error message inverted (no error message)	
			5	ALARM, warning message (see "Protective Functions (P8)" on **Page 90**)	
			6	REV (Reverse run), anticlockwise rotating field active	
			7	Output frequency = frequency setpoint	
			8	Motor controller active	
			9	Zero frequency Output frequency = 0 (Hz)	
			10	Frequency monitoring 1 For the frequency ranges set at P5.4 and P5.5	
			11	Frequency monitoring 2 For the frequency ranges set at P5.6 and P5.7	
			12	PID monitoring For the deviation set at P9.17	
			13	Overtemperature signal	
			14	Overcurrent control active	
			15	Overvoltage control active	
			16	PLC Sequence control active	
			17	PLC Sequence control, single step completed	
			18	PLC Sequence control, program cycle completed	
			19	PLC Sequence control, pause	
			20	Counter, value 1 reached The counter value is ≧ the trigger value set at P3.21 and can be reset by activating P3.24	
			21	Counter, value 2 reached The counter value is ≧ the trigger value set at P3.22 and can be reset by activating P3.24	
			22	RUN message active	
			23	Analog minimum reference error Message, AL 50 if the value of AI1 and/or AI2 goes below the 4 mA or 2V setpoint value (live zero) (P2.1 = 1, P2.5 = 1)	

Values continued on next page

Logic Function, continued

PNU	ID	Access RUN	Value/Range	Description	Factory Setting (P1.3)
			24	LOG function fulfilled Message if the logical operation of P13.3 is fulfilled (LOG = 1)	
			25	PID controller, actual value monitoring Message if the actual value is within the hysteresis set at P9.15 and P9.16	
			26	External brake actuated Switch threshold: set value of P12.8	
			27	Current monitoring Switch threshold: set value of P5.8	
			28	Fieldbus, Remote output The number of the assigned digital output is written directly to the control word (ID2001, bit 13)	
P13.2	1454	X	—	**LOG function, Selection input B**	0
			Like P13.1	—	
P13.3	1455	X	—	**LOG function, select operation**	0

Logical operation (LOG) of the selected functions of parameter P13.1 (A) and P13.2 (B)

Signal		Logic Link (LOG)		
A	**B**	**AND**	**OR**	**XOR (Exclusive or)**
0	0	0	0	0
0	1	0	1	1
1	0	0	1	1
1	1	1	1	0

The result of the logic operation (LOG) can be assigned to one of the three digital outputs (DO = P5.3), RO1 = P5.1 and RO2 = P5.2 with the value 24, or called via the serial interface (RS485, Modbus RTU) or an optional fieldbus connection (CANopen, PROFIBUS DP)

			0	A AND B
			1	A OR B
			2	A XOR B, exclusive A or B

Second Parameter Set (P14)

The selected parameters for a second motor are combined in parameter group P14. This enables the alternative operation of two motors at the output of the frequency inverter, even with different rating specifications.

In the factory setting, the parameters of this second parameter set (P14) are identical to the factory settings of the basic parameters (first parameter set) and described in the relevant sections:

- P14.1–P14.6 = P7.1–P7.6 (motor)
- P14.7–P14.10 = P6.3–P6.6 (drives control)
- P14.11 = P11.1, P14.12 = P11.7 (V/f control)
- P14.13–P14.16 = P8.6–P8.9 (protection function)

Second Parameter Set

PNU	ID	Access RUN	Value/Range	Description	Factory Setting (P1.3)
P14.1	1347	X	—	**Motor rated current (2PS)**	I_e
			0.2 x I_e–2 x I_e	Ie = Rated operational current of the frequency inverter (See motor rating plate)	
P14.2	1352	X	—	**Current limit (2PS)**	1.5 x I_e
			0.2 x I_e–2 x I_e	1.5 x I_e	
P14.3	1350	X	—	**Motor rated speed (2PS)**	①
			300–20,000 RPM	(See motor nameplate)	
P14.4	1351	X	—	**Motor power factor (cos φ) (2PS)**	①
			0.30–1.00	(See motor nameplate)	
P14.5	1348	X	—	**Motor rated operating voltage (2PS)**	①
			180–676V	(See motor nameplate) Pay attention to the supply voltage and the type of circuit in the stator winding	
P14.6	1349	X	—	**Motor nominal frequency (2PS)**	60.00
			30–320 Hz	(See motor rating plate)	
P14.7	1343	X	—	**Minimum frequency (2PS)**	0.00
			0.00–P14.8 Hz	—	
P14.8	1344	X	—	**Maximum frequency (2PS)**	60.00
			P14.7–320 Hz	—	
P14.9	1345	✓	—	**Acceleration time (2PS) (acc3)**	3.0
			0.1–3000s	—	
P14.10	1346	✓	—	**Deceleration time (2PS) (dec3)**	3.0
			0.1–3000s	—	

Note

① Default values vary based on actual unit ratings.

Second Parameter Set, continued

PNU	ID	Access RUN	Value/Range	Description	Factory Setting (P1.3)
P14.11	1355	X	—	**V/Hz characteristic curve (2PS)**	0
				(See "P11.1" on **Page 107**)	
			0	Linear	
			1	Squared	
			2	Configurable	
P14.12	1354	X	—	**Torque increase (2PS)**	0
			0	Deactivated	
			1	Enabled Automatic increase of the output voltage (Boost) with an increased load and low speed (for example, heavy starting duty) ⚠ **Caution:** A high torque at low speed leads to a high thermal load on the motor **Note:** If temperatures are too high, the motor should be fitted with a fan	
P14.13	1353	X	—	**Motor temperature protection (2PS)**	2
				The motor temperature protection is designed to protect the motor from overheating. It is based on a temperature algorithm and uses the motor current (P14.1) to determine the motor load (see "Motor Heat Protection (P8.6–P8.9)" on **Page 92**)	
			0	Deactivated	
			1	Alarm (AL16)	
			2	Fault (F… 16), stop function according to P6.8	
P14.14	1469	X	—	**Motor ambient temperature (2PS)**	40
			–20° to 100°C	—	
P14.15	1470	X	—	**Motor cooling factor at zero frequency (2PS)**	40.0
			0.0–150%	The cooling factor of the motor at zero frequency defines the ratio for cooling the motor at the rated frequency with the rated operational current without an external fan (see figure on **Page 88**)	
P14.16	1471	X	—	**Motor thermal time constant (2PS)**	45
			1–200 min	The temperature time constant determines the time-span in which the heat calculation model achieves 63% of its end value. It depends on the design of the motor and is different from manufacturer to manufacturer. The larger the motor design, the greater the time constant	

The following examples show two practical applications for the second parameter set.

Example 1

Roller conveyor with rotary table:

- Motor M1 (0.75 kW) drives the rollers on the rotary table and transports the goods further
- Motor M2 (1.5 kW) rotates the table for the alternating acceptance of goods from two feed lines

Roller Conveyor with Rotary Table

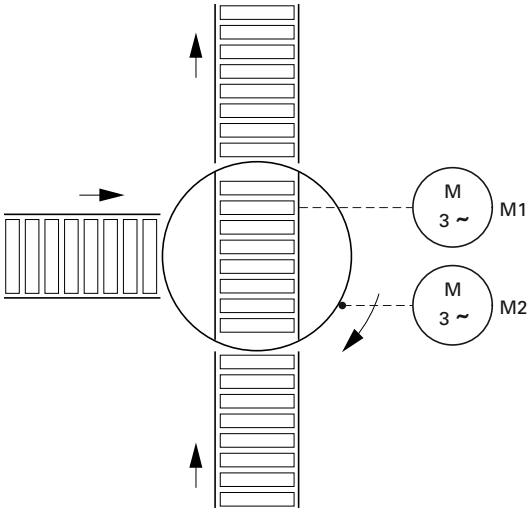

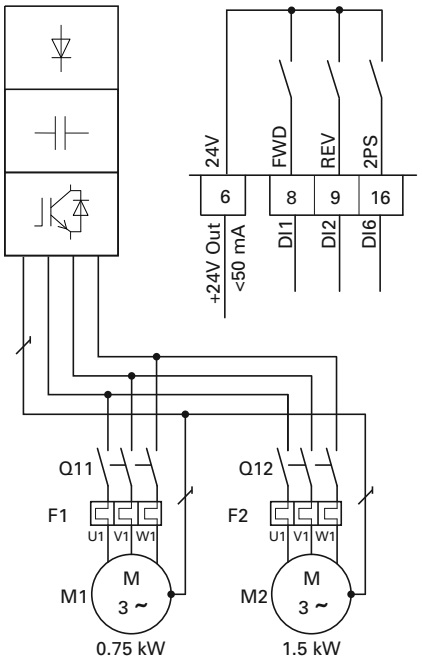

For alternating operation (rotary movement "exclusive or" of the transport rollers) on the rotary table, a frequency inverter for the largest connected load (MMX34AA4D3_) was selected.

The different rating data of the motors were set in the parameter groups P7 (for motor M1) and P14 (for motor M2). The second parameter set (P14) is activated here as an example via digital input DI6 (P3.27 = 6).

The change between the two motors is implemented in this example via contactors Q11 (M1) and Q12 (M2) at standstill. The enabling and selection of the relevant parameter group is activated via the digital inputs:

- Motor M1 = DI1 (FWD, control signal terminal 8) operation with parameter group P7
- Motor M2 = DI1 (FWD, control signal terminal 8) and DI6 (2PS, control signal terminal 16) operation with parameter group P14 (second parameter set)

During maintenance and setting work the following applies for reversing duty:

- Motor M1 = DI2 (REV, control signal terminal 9) operation with parameter group P7
- Motor M2 = DI2 (REV, control signal terminal 9) and DI6 (2PS, control signal terminal 16) operation with parameter group P14 (second parameter set)

Digital input DI6 is assigned in the factory setting (P3.12 = 6) with the function PI-OFF (PID controller, deactivated). Setting P3.12 = 0 is used to switch off this function of DI6. Setting P3.27 = 6 enables the second parameter set (2PS) function to be assigned to digital input DI6.

Example 2

Stop function with two different deceleration times.

Stop Function with Two Different Deceleration Times

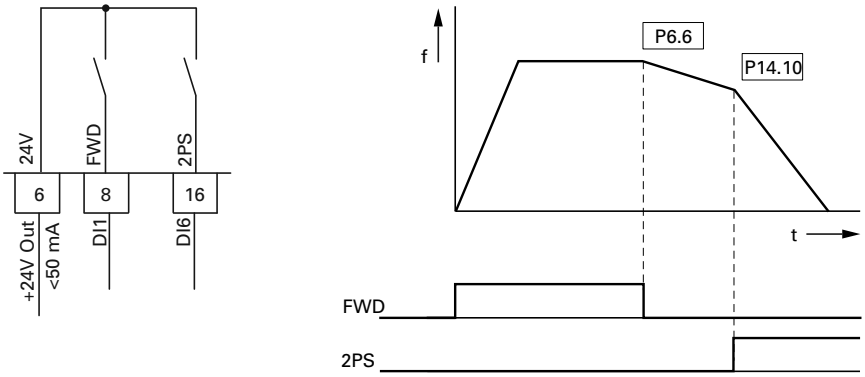

The Stop function with deceleration time can be activated with parameter P6.8 = 1. If the enable signal on the digital input DI1 (FWD, control signal terminal 8) is switched off, the output frequency of the frequency inverter can be reduced according to the deceleration time (dec1) set at P6.6.

The second parameter set (2PS) enables you to set at P14.10 a different value to dec1 or dec2. For example, the second parameter set (P14) is activated here via digital input DI6 (P3.27 = 6). Activating DI6 causes the output frequency to be reduced according to the deceleration time (dec3) set at P14.10.

CAUTION

Debounced inputs may not be used in the safety circuit diagram.

The motor parameters must be identical in both parameter groups (P7 and P14).

Digital input 6 is assigned in the factory setting (P3.12 = 6) with the function PI-OFF (PID controller, deactivated). With P3.12 = 0 you can remove this function (PI-OFF) from digital input 6.

System Parameter

The system parameters (S parameters) inform the user of device-specific settings.

The S parameters are not visible (i.e. hidden), as long as you have activated the quick start assistant (P1.1 = 1, see "Parameter Menu (PAR)" on **Page 64**).

System Parameter

PNU	ID	Access RUN	Value/Range	Description	Factory Setting (P1.3)
Hard- and Software Information					
S1.1	833	X	xx	**API SW ID (control section software ID)**	—
S1.2	834	X	x	**API SW Version (control section software version)**	—
S1.3	835	X	x	**Power SW ID (power section software ID)**	—
S1.4	836	X	xx	**Power SW Version (power section software version)**	—
S1.5	837	X	90xx	**Application ID**	—
S1.6	838	X	x.xx	**Application revision**	—
S1.7	839	X	xx	**System load**	—
				Load as percentage [%]	
Communication Information on Interface RS485 (Control Signal Terminals A, B)					
S2.1①	808 ①	X	—	**Communication status**	0.000 ①
				xx = Number of error messages (0–64)	
				yyy = Number of correct messages (0–999)	
S2.2①	809 ①	✓	—	**Fieldbus protocol**	0 ①
			0	Fieldbus deactivated	
			1	Modbus RTU	
S2.3①	810 ①	✓	—	**Slave address**	1 ①
			1–255	—	
S2.4①	811 ①	✓	—	**Baud rate**	5 ①
				Transfer rate (1 Baud = 1 symbol per second)	
				The baud rate must be equal on the send and receive sides	
			0	= 300 Baud	
			1	= 600 Baud	
			2	= 1200 Baud (1.2k Baud)	
			3	= 2400 Baud (2.4k Baud)	
			4	= 4800 Baud (4.8k Baud)	
			5	= 9600 Baud (9.6k Baud)	
			6	= 19200 Baud (19.2k Baud)	
			7	= 38400 Baud (38.4k Baud)	
			8	= 57600 Baud (57.6k Baud)	

Note

① With a fieldbus connection (option, for example, CANopen, PROFIBUS DP, and so on) modified ID numbers and different factory settings are stored here. Detailed information is provided in the specific manuals of the relevant fieldbus interface card.

System Parameter, continued

PNU	ID	Access RUN	Value/Range	Description	Factory Setting (P1.3)
S2.6	813	✓	—	**Parity type**	0
			0	None	
			1	Even	
			2	Odd	
S2.7	814	✓	—	**Communication timeout**	0
			0	= Not used	
			1	= 1s	
			2	= 2s	
			…255	= up to 255s	
S2.8	815	✓	—	**Reset communication status**	
			0	= Not used	
			1	= Resets parameter S2.1	
Unit Counter					
S3.1	827	X	—	**MWh counter**	0.00
S3.2	828	X	—	**Operating days (d)**	0
S3.3	829	X	—	**Operating hours (h)**	0
S3.4	840	X	0–0000	**RUN counter, days**	—
S3.5	841	X	0–24	**RUN counter, hours**	—
S3.6	842	X	0– 0000	**Fault/alarm counter**	—
User Set					
S4.1	830	✓	0–15	**Display contrast**	15
S4.2	831	X	—	**Restore factory defaults**	0
			0	= Factory setting or changed value (user setting for parameter)	
			1	= Restores factory settings for all parameters	
S4.3	832	✓	—	**Password**	0000
				The password protection applies to all parameters Password forgotten (see "Service and Warranty" on **Page 17**) Setting a password requires user to select a value and confirm value a second time. Password protection can be disabled by inputting the password value into parameter S4.3 after it has been set. All other parameter changes will require the password before the user can modify.	
			0000	Deactivated	
			0001–9999	Activated, set individual password	

Operational Data Indicator (MON)

By applying the specified supply voltage (L1, L2/N, L3), the LCD display is illuminated (= Power ON) and all segments are shown briefly. The parameter number (M1.1) and the respective display value (0.00) are then displayed automatically in alternating sequence.

Operational Data Indicator

You can use the MON (Monitor) menu level to select the desired operational data indicator (parameter number M_) with the arrow buttons ∧ and ∨. The parameter number and the display value are shown in alternation automatically, and the display can be fixed on the selected display value with the OK button. If you wish to access a different operational data indicator, press the OK button once again. You can then make the selection with the arrow buttons ∧ and ∨ and confirm with the OK button. The appropriate unit is shown under the respective operational data indicator.

The values of the operating data display cannot be changed by hand (i.e. by value entry).

You can select operational data indicators during operation (RUN).

Operational Data Indicator

PNU	ID	Designation	Display Value	Unit	Description
M1.1	1	Output frequency	0.00	Hz	Frequency to motor
M1.2	25	Frequency reference value	0.00	Hz	Frequency reference value
M1.3	2	Motor shaft speed	0	RPM	Calculated speed of the motor (RPM) ①
M1.4	3	Motor current	0.00	A	Measured motor current
M1.5	4	Motor torque	0.0	%	Calculated ratio of torque to rated torque of the motor ①
M1.6	5	Motor power	0.0	%	Calculated ratio of actual output power to rated motor output ①
M1.7	6	Motor voltage	0.0	V	Measured output voltage to motor
M1.8	7	DC bus voltage	000	V	Measured intermediate circuit voltage (depending on the supply voltage)
M1.9	8	Unit temperature	00	°F (°C)	Measured heat sink temperature
M1.10	9	Motor temperature	0	%	% (calculated value) ②
M1.11	13	Analog input 1	0.0	%	Value on AI1
M1.12	14	Analog input 2	0.0	%	Value on AI2
M1.13	26	Analog output 1	0.0	%	Value on AO1
M1.14	15	Digital input	0	—	Status DI1, DI2, DI3 (see "Example of Status Displays" on **Page 128**)

Notes

① The calculated motor data (M1.3, M1.5 and M1.6) is based on the values entered in parameter group P7 (see "Motor (P7)" on **Page 88**).

② The calculated motor temperature (M1.10) considers the temperature model of the protection function in parameter group P8 (see "Protective Functions (P8)" on **Page 90**).

Operational Data Indicator, continued

PNU	ID	Designation	Display Value	Unit	Description
M1.15	16	Digital input	0	—	Status DI4, DI5, DI6 (see "Example of Status Displays" on **Page 128**)
M1.16	17	Digital output	1	—	Status RO1, RO2, DO (see "Example of Status Displays" on **Page 128**)
M1.17	20	PID reference value	0.0	%	Percentage of maximum setpoint
M1.18	21	PID feedback	0.0	%	Percentage of maximum actual value
M1.19	22	PID error value	0.0	%	Percentage of maximum fault value
M1.20	23	PID output	0.0	%	Percentage of maximum output value
M1.21	1480	Counter, digital input	0	—	Number of actuations of a digital input (DI1–DI6) assigned at P3.23. The reset command for the counter is set at P3.24

Under the system parameters S3.1 to S4.1 (see "System Parameter" on **Page 125**) you can also display the operational data of the M-Max frequency inverter and adjust the contrast of the display unit.

Example of Status Displays

The status displays of the digital inputs and outputs are equivalent. These make it possible to check for whether an output control signal (for example, from an external controller) of the inputs (DI1 to DI6) activates the frequency inverter. This provides you with a simple means for checking the wiring (wire breakage).

The following table shows a few examples.

Display value:

- 1 = activated = High
- 0 = not activated = Low

Status Displays Examples

PNU	ID	Display Value	Description
M1.14	15	0	No digital input (DI1, DI2, DI3) is actuated
		1	Control signal terminal 10 is actuated (DI3)
		10	Control signal terminal 9 is actuated (DI2)
		100	Control signal terminal 8 is actuated (DI1)
		101	The control signal terminals 10 and 8 are actuated (DI3 + DI1)
		111	The control signal terminals 10 and 9 and 8 are actuated (DI3 + DI2 + DI1)
M1.15	16	1	Control signal terminal 14 is actuated (DI14)
		10	Control signal terminal 15 is actuated (DI15)
		100	Control signal terminal 16 is actuated (DI16)
M1.16	17	1	Transistor DO is actuated The transistor switches the voltage connected at control signal terminal 20 (DO+) to control signal terminal 13 (DO–)
		10	Relay RO2 is actuated The control signal terminals 25 (R21) and 26 (R24) are connected (closed changeover contact)
		100	Relay RO1 is actuated N/O contact, control signal terminal 22 (R13) and 23 (R14) is closed

Setpoint Input (REF)

REF: Setpoint value definition (Reference) via the operating unit.

The settings of the frequency setpoint via the keypad have the same effect as the function of an electronic motor potentiometer. The set value is written in parameter P6.15 and can also be changed there. It is retained also with a disconnection of the supply voltage.

A frequency reference value that is set under REF is only effective with the KEYPAD control level activated.

The following table shows a good example of specifying the frequency setpoint value via the operating unit.

Setpoint Input (REF)

Sequence	Commands	Display	Description
1	LOC REM		Activate control level KEYPAD with the LOC/REM button. The arrow (◀) points to menu item REF
		READY RUN STOP ALARM FAULT REF MON PAR FLT 0.00 Hz FWD REV I/O KEYPAD BUS	Actuating the START button enables the RUN mode (rotating field direction FWD)
			The STOP button (P6.16 = 1) activates the STOP mode. The Stop function is set at parameter P6.8
2	OK	READY RUN STOP ALARM FAULT REF MON PAR FLT 0.00 FWD REV I/O KEYPAD BUS	Pressing the OK button activates the setpoint entry (right-hand segment flashing)
			The two arrow buttons (< or >) are used to select the entry digit (cursor)
			The arrow buttons ∧ or ∨ are used to select the value of the entry digit (0, 1, 2, …9, 0) **Note:** Changes in the frequency setpoint are only possible if the number display is flashing (Hz), even in RUN mode. The value is stored when the display is constant When the supply voltage is switched off, the last setpoint entered (see P6.15) and the KEYPAD mode are stored

Setpoint Input (REF), continued

Sequence	Commands	Display	Description
3		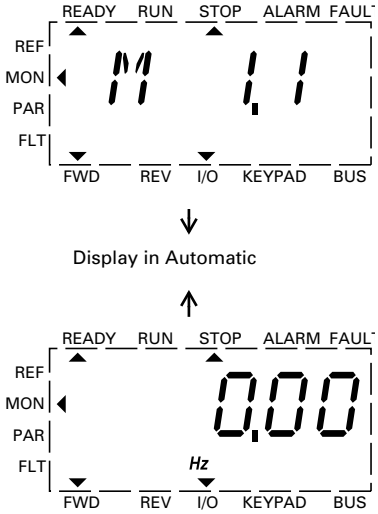	If the supply voltage is switched on with the KEYPAD control level set, the MON menu item is activated first. The set display value is shown in automatic alternation (factory setting: M.1.1 ⟷ 0.00 Hz)
	   		Actuate the BACK/RESET, ∧ and OK buttons in succession. The entry level is then reactivated (see sequence 2)
4	 		The two arrow buttons (< or >) are used to change the rotating direction (FWD, REV)
	FWD REV	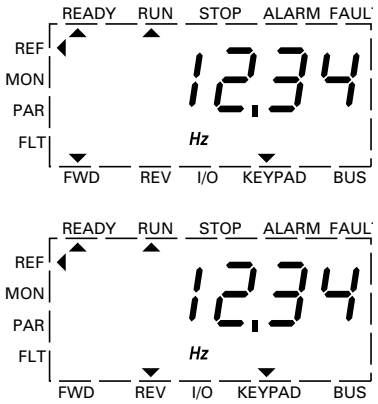	The rotating direction change is carried out in the factory setting (P6.14 = 0) with an automatic stop at 0 Hz. For a direct changeover (FWD/REV) you must set parameter P6.14 = 1 **Note:** The frequency of the REV rotating field direction is not displayed with a negative sign **Note:** When the setpoint entry is active (flashing number display), the arrow buttons are used to change the entry locations (cursor)

Serial Interface (Modbus RTU)

General Information About Modbus

Modbus is a centrally polled bus system in which a so-called master (PLC) controls the entire data transfer on the bus. Cross-traffic between the individual slaves is not possible.

Each data exchange is initiated only on request of the master. Only one request can be issued on the cable. A slave cannot initiate a transfer but only react to a request with a response.

Two types of dialog are possible between master and slave:

- The master sends a request to a slave and waits for a response
- The master sends a request to all slaves and does not wait for a response (broadcast)

More information on Modbus can be found under www.modbus.org.

Communications in a Modbus Network

Modbus Network with M-Max

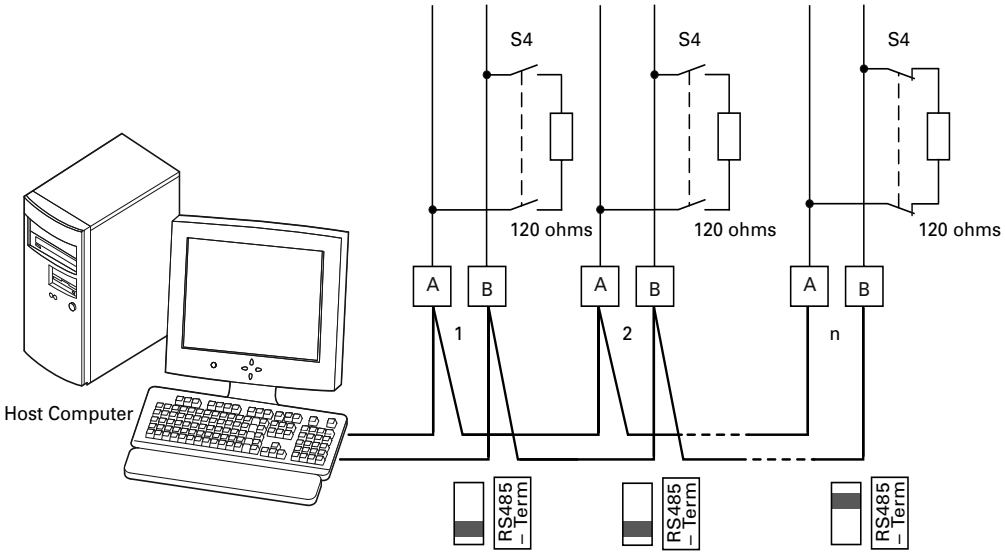

The figures shows a typical arrangement with a host computer (master) and any number (maximum 31 slaves) of frequency inverter M-Max (slaves). Each frequency inverter has a unique address in the network. This addressing is executed individually for each M-Max via system parameter S2.3 and is independent of the physical connection (position) in the network.

Serial Interface A-B

The electrical connection between master and the slaves connected in parallel is implemented via the serial interface A-B (A = negative, B = positive) with a shielded RS485 twisted pair cable.

The position of the connection terminals in the M-Max for the serial interface A-B (see figure on **Page 45**).

The M-Max's built-in RS-485 port supports the Modbus RTU protocol and therefore allows a direct network connection without an additional interface module.

The network cable must be provided at each physical end (last station) with a bus termination resistor (120 ohms) in order to prevent signal reflections and the resulting transfer errors. This necessary resistor is already integrated in the M-Max frequency inverter and is switched on via microswitch S4 (see figure on **Page 45**).

Modbus Parameters

The following table shows the Modbus parameters in the M-Max.

RUN Indicates the access during operation (FWD or REV)
X = No parameter change possible,
✓ = Parameter change possible.

ro/rw Indicates the access via the fieldbus
ro = Read only possible,
rw = Read and write possible.

Modbus Parameters in the M-Max

PNU	ID	Access RUN	Access ro/rw	Designation	Value Range	FS (P1.3)
S2.1	808 ①	X	**ro**	Communication status	Format xx.yyy **xx** = Number of received faulty messages (0–64) **yyy** = Number of received correct messages (0–999)	0.000 ①
S2.2	809 ①	✓	**rw**	Fieldbus protocol	**0** = Fieldbus deactivated **1** = Modbus	0 ①
S2.3	810 ①	✓	**rw**	Slave address	1–255	1 ①
S2.4	811 ①	✓	**rw**	Baud rate	**0** = 300 **1** = 600 **2** = 1200 (1.2k Baud) **3** = 2400 (2.4k Baud) **4** = 4800 (4.8k Baud) **5** = 9600 (9.6k Baud) **6** = 19200 (19.2k Baud) **7** = 38400 (38.4k Baud) **8** = 57600 (57.6k Baud)	5 ①
S2.6	813	✓	**rw**	Parity type	**0** = None I 2 Stop bits **1** = Even I 1 Stop bit **2** = Odd I 1 Stop bit	0
S2.7	814	✓	**rw**	Timeout up to fieldbus error (error 53) if no master messages are received although Modbus is still active.	**0** = Not used **1** = 1s **2** = 2s **...255** = up to 255s	0
S2.8	815	✓	**rw**	Reset communication status xx and yyy are reset to 0	**0** = Not used **1** = resets parameter S2.1	0
Drives Control						
P6.1	125	✓	**rw**	Control place 1	**1** = Control signal terminals (I/O) **2** = Control unit (KEYPAD) **3** = Interface (BUS)	1
P6.2	117	✓	**rw**	Setpoint Source	**0** = Fixed frequency (FF0) **1** = Control unit (KEYPAD) **2** = Interface (BUS) **3** = AI1 (analog setpoint 1) **4** = AI2 (analog setpoint 2)	3

Note

① When the fieldbus is connected (option, for example, CANopen, PROFIBUS DP, and so on) modified ID numbers and different factory settings are stored here. Detailed information is provided in the specific manuals of the relevant fieldbus interface module.

For Modbus to function at least the following parameters must be set:

PNU	Value	Notes
S2.2	1	To activate Modbus
S2.3	1–255	Set differently at each slave (MMX); 0 is used by the master for broadcasts
S2.4	0–8	Same setting at the master and slave
S2.6	0/1	Same setting at the master and slave
6.1	3	Fieldbus selected as a control level
6.2	2	Set setpoint value via the fieldbus; other setpoint sources also possible, fixed frequencies overlay all setpoint values, also a fieldbus setpoint value

Another requirement is that the arrow ▼ in the lower status line of the LCD display is pointing to BUS (adjustable via the LOC/REM button). The PLC (master) must also be provided with an RS485 serial interface and the necessary Modbus RTU driver software.

Operating Mode Modbus RTU

Operating mode Modbus RTU (Remote Terminal Unit) transfers the data in binary format (faster data rate) and determines the transfer format for the data request and the data response. Each message byte that is sent contains two hexadecimal characters (0 … 9, A … F).

The data transfer between a master (PLC) and the frequency inverter (M-Max) is carried out according to the following sequence:

Master request: the master sends a Modbus frame to the frequency inverter.

Slave response: the frequency inverter sends a Modbus frame as a response to the master.

Data Exchange Between Master and Slave

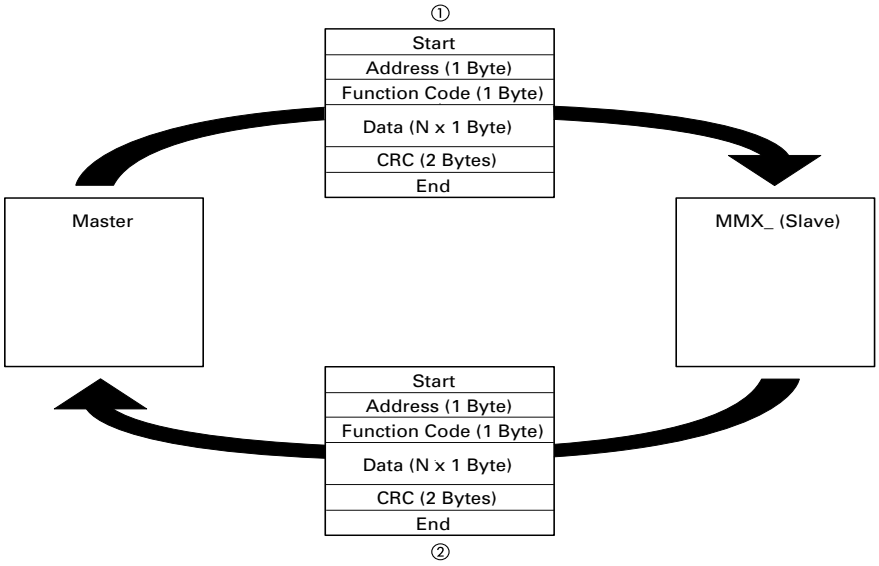

The frequency inverter (slave) only sends a response if it has received a request from the master beforehand.

Notes

① Master request.

② Slave response, not with broadcast.

Structure of the Master Request

Address:

- The address (1 to 255) of the frequency inverter to be sent the request is entered in parameter S2.3. Only the frequency inverter with this address can respond to the request
- Address 0 is used as a so-called Broadcast (message to all slaves) from the master. In this mode, individual slaves cannot be addressed and data cannot be output from the slaves

Function Code:

The function code defines the type of message. The following operations can be executed on the M-Max:

Function Code (hex)	Designation	Description
03	Read Holding Registers	Reading of the holding registers in the slave (process data, parameters, configuration) A master request enables up to 11 registers to be read
04	Read Input Registers	Reading of the input registers in the slave (process data, parameters, configuration) A master request enables up to 11 registers to be read
06	Write Single Register	Writing of a holding register in the slave With a general telegram (Broadcast) the appropriate holding registers are written in all slaves The register is read back for comparison
10	Write Multiple Register	Writing of several holding registers in the slave With a general telegram (Broadcast) the appropriate holding registers are written in all slaves A master request enables up to 11 registers to be read

Data

The length of the data block (Data: N x 1 Byte) depends on the function code. This consists of two hexadecimal character sets between 00 and FF. The data block contains additional information for the slave in order to carry out the operation defined by the master in the function code. Example: number of parameters to be processed.

CRC

The telegrams in the Modbus RTU have a CRC (Cyclical Redundancy Check). This CRC field consists of two bytes that contain a binary 16 bit value. The CRC check is always run independently of the parity check for the individual characters of the telegram. The CRC result is attached to the end of the telegram by the master. The slave recalculates while receiving the telegram and compares the calculated value with the actual value in the CRC field. If both values are not identical, an error is set.

Structure of the Slave Response
Required Transfer Time

- The time between receiving a request from the master and the response of the frequency inverter is at least 3.5 characters (rest time)
- Once the master has received a response from the frequency inverter, it must wait for at least the rest time before it can send a new request

Normal Slave Response

- If the master request contains a write register function (function code 06 or 16), the frequency inverter immediately returns the request as a response
- If the master request contains a read register function (function code 03 or 04), the frequency inverter returns the read data with the slave address and the function code as a response

Slave Response in the Event of an Error

If a request contains an error (for example, incorrect data address or incorrect data value) other than a transfer error, the frequency inverter returns an exception message without executing anything. You can evaluate the exception message

Structure of Exception Message

- Address (of the master request)
- Function code (of the master request): MSB is set to 1 (for example, with function code 06 = 1000 0110)
- Data field contains the error code (is described in the following table)
- CRC

Error Code Description

Exception Code	Meaning	Description
01	Illegal function	This function is not supported
02	Illegal data address	The address was not found
03	Illegal data value	The data format is not permissible or is incorrect
04	Slave device error	Occurrence of a non-regenerative error while the slave attempted to execute a slave response
06	Slave device busy	The slave has received the master request error-free. However, it is engaged in processing a lengthy command

Example:

Master request that contains a non-existent data address.

Master request: 01 06 0802 0001 EBAA (hex)

hex	Name
01	Slave address
06	Function code (here: Write a holding register)
0802	2050 (dec). The ID number of the written register is 2051 (dec) as the master PLC has an offset of +1
0001	Content (2 bytes) for register 42051: 0000 0000 0000 0001 (bin)
EBAA	CRC

Slave response: 01 86 02 C3A1 (hex)

hex	Name
01	Slave address
86	Function code (here: Write a holding register) MSB was set to 1
02	Error code: Stated address not found.
C3A1	CRC

No Slave Response:

In the following cases, the frequency inverter ignores the request and does not send a reply:

- On receiving a broadcast request
- If the request contains a transmission error
- If the slave address in the request does not match that of the frequency inverter
- With an invalid data length, (for example, reading of 12 registers) error message F08 is triggered in the MMX
- With a CRC or parity error
  With a CRC error the value of system parameter S2.1 is increased by 1 (xx = number of faulty messages)
- If the time interval between the messages is less than 3.5. characters

The master must be programmed to repeat the request if it does not receive a response within a specified time.

Data Storage with Modbus

The information is stored in one input and one holding register.

Register Numbers	Type	Name
30001–39999	Read only (ro = read only)	Input-register
40001–49999	Read/write (rw = Read/write)	Holding register

The registers are the memory location of the data. The memory size of each register is 1 word.

Modbus-Register-Mapping

The register mapping enables the processing in MMX of the content listed in the following table via Modbus RTU.

Group	Register Numbers	ID Range	Assignment of the ID Numbers
Display values	40001–40098 (30001–30098)	1...98	Parameter list: (see "Appendix A" starting on **Page 142**)
Failure code	40099 (30099)	99	Error list: (see "Error and Warning Messages" starting on **Page 56**)
Parameters	40101–40999 (30101–30999)	101...1999	Parameter list: (see "Appendix A" starting on **Page 142**)
Input process data	42001–42099 (32001–32099)	2001...2099	(See **Page 137**)
Output process data	42101–42199 (32101–32199)	2101...2199	(See **Page 138**)

Each content in this table is assigned an ID number (abbreviation of the register numbers). This ID number is used in M-Max for the communication with Modbus RTU.

Example: Control word (ID 2001)

	ID	Register Numbers
Value	**2001**	**32001/42001**
Application	Communication of Modbus RTU	Memory location of the data

With some PLC manufacturers, the interface driver for Modbus RTU communication may contain an offset of +1 (the ID to be used would then be 2000 instead of 2001).

When processing values, the comma is not included, for example, the motor current (ID 2106) in the display of the MMX is shown as 0.35 A but is transferred via Modbus as 0023 (hex) (0035 [dec]).

Modbus Process Data

Process data is processed in the M-Max frequency inverter faster than the display values, error codes and parameters.

Input Process Data

The input process data is used to control the M-Max frequency inverter.

ID	Modbus Register	Designation	Value Range	Type
2001	32001, 42001	Fieldbus control word (BUS)	—	Binary code
2002	32002, 42002	Fieldbus general control word (BUS)	—	Binary code
2003	32003, 42003	Fieldbus speed setpoint (BUS)	0.01	%
2004	32004, 42004	PID controller, setpoint	0.01	%
2005	32005, 42005	PID actual value	0.01	%
2006	32006, 42006	—	—	—
2007	32007, 42007	—	—	—
2008	32008, 42008	—	—	—
2009	32009, 42009	—	—	—
2010	32010, 42010	—	—	—
2011	32011, 42011	—	—	—

Control Word (ID 2001)

These bits are used to control the M-Max frequency inverter. The content can be adapted to your own application and then sent as a control word to the frequency inverter.

	Description	
Bit	**Value = 0**	**Value = 1**
0	Stop	Operation
1	Clockwise rotating field (FWD)	Anticlockwise rotating field (REV)
2	No action	Reset error
3	As per setting P6.8	Free coasting (overwrite value from P6.8)
4	As per setting P6.8	Ramp (overwrite value from P6.8)
5	No action	Overwrite acceleration/deceleration ramps to 0.1 s
6	No action	Block setpoint (speed not variable)
7	No action	Overwrite setpoint with 0
8	No action	Control level = Fieldbus (overwrite value from P6.8)
9	No action	Setpoint input = Fieldbus (overwrite value from P6.8)
10	Not used	—
11	Not used	—
12	No action	The inverter is blocked and the drive stops as quickly as possible (an edge is required for restart)
13	No action	Control of a digital output: P5.1 = 28 (Relay R01) P5.2 = 28 (Relay R02) P5.3 = 28 (Transistor D0)
14	Not used	—
15	Not used	—

General Control Word (ID 2002)

15	14	13	12	11	10	9	8	7	6	5	4	3	2	1	0
NB	NB	NB	NB	NB	NB	NB	NB	NB	NB	NB	NB	NB	NB	NB	NB

Speed Setpoint (ID 2003; Frequency Setpoint)

The permitted value range lies between 0 and 10.000. In the application, this value is scaled to a percentage in the frequency range between the defined minimum and maximum frequencies.

15	14	13	12	11	10	9	8	7	6	5	4	3	2	1	0
MSB															LSB

Output Process Data

The output process data is used to monitor the frequency inverter.

ID	Modbus Register	Designation	Value Range	Type
2101	32101, 42101	Fieldbus status word	—	Binary code
2102	32102, 42102	Fieldbus general status word	—	Binary code
2103	32103, 42103	Fieldbus actual speed	0.01	%
2104	32104, 42104	Motor frequency	0.01	+/– Hz
2105	32105, 42105	Motor speed	1	+/– RPM (min^{-1})
2106	32106, 42106	Motor current	0.01	A
2107	32107, 42107	Motor torque	0.1	+/–% (of the nominal value)
2108	32108, 42108	Motor power	0.1	+/–% (of the nominal value)
2109	32109, 42109	Motor voltage	0.1	V
2110	32110, 42110	DC-link voltage (DC)	1	V
2111	32111, 42111	Current error	—	Error code (E_)

Status Word (ID 2101)

Information on the device status and messages are defined in the status word:

Bit	Description Value = 0	Value = 1
0	Drive not ready	Ready for operation (READY)
1	Stop	Running operation message (RUN)
2	Clockwise rotating field (FWD)	Anticlockwise rotating field (REV)
3	No fault	Fault detected (FAULT)
4	No warning	Warning active (ALARM)
5	Acceleration ramp	Frequency actual value equals setpoint value definition
6	—	Zero speed
7	Speed control deactivated	Speed control activated
8–15	Not used	

General Status Word (ID 2102)

Bit	Description Value = 0	Value = 1
0	—	Control level = Fieldbus (BUS)
1	—	Setpoint input = Fieldbus (BUS)
2–10	Not used	
11	Remote input not active	Remote input active The status of a selected digital input (P3.28) is read out
12	Actuation (P3.37) not active	Actuation (P3.37) active
13	—	Control level = Control signal terminals (I/O)
14	—	Control level = KEYPAD
15	—	Control level = Fieldbus (BUS)

Actual Speed (Frequency Actual Value)

The actual speed of the frequency inverter is within a value range of 0 and 10,000. In the application, this value is scaled to a percentage in the frequency range between the defined minimum and maximum frequencies.

15	14	13	12	11	10	9	8	7	6	5	4	3	2	1	0
MSB															LSB

Explanation of Function Code

Function Code 03 (hex): Reading of Holding Registers

This function reads the content of a number of consecutive holding registers (of specified register addresses).

Example:

Reading of motor speed (ID 2105) and motor current (ID 2106) of the M-Max frequency inverter with the slave address 5.

Master request: 05 03 0838 0002 4622 (hex)

Hex	Name
05	Slave address
03	Function code (reading of holding registers)
0838	2104 (dec): The ID number of the first requested register is 2105 (dec) as the master PLC has an offset of +1.
0002	Total number of requested registers (42105–42106)
4622	CRC

Slave response: 05 03 04 05D7 0018 0F0D (hex)

Hex	Name
05	Slave address
03	Function code (reading of holding registers)
04	Number of consecutive data bytes (2 registers x 2 bytes = 4 bytes)
05D7	Content (2 bytes) of register 42105: 1495 (dec) (motor speed = 1495 RPM)
0018	Content (2 bytes) of register 42106: 0024 (dec) (motor current = 0.24A)
0F0D	CRC

Function Code 04 (hex): Reading of Input Registers

This function reads the content of a number of consecutive input registers (of specified register addresses).

Example:

Reading of motor speed (ID 2105) and motor current (ID 2106) of the M-Max frequency inverter with the slave address 5.

Master request: 05 04 0838 0002 F3E2 (hex)

Hex	Name
05	Slave address
04	Function code (here: Reading of input registers)
0838	2104 (dec): The ID number of the first requested register is 2105 (dec) as the master PLC has an offset of +1.
0002	Total number of requested registers (32105–32106)
F3E2	CRC

Slave response: 05 04 04 05D7 0018 0EBA (hex)

Hex	Name
05	Slave address
04	Function code (here: Reading of input registers)
04	Number of consecutive data bytes (2 registers x 2 bytes = 4 bytes)
05D7	Content (2 bytes) of register 32105: 1495 (dec) (motor speed = 1495 RPM)
0018	Content (2 bytes) of registers 32106: 0024 (dec) (motor current = 0.24A)
0EBA	CRC

Function Code 06 (hex): Writing a Holding Register

This function writes the data to a holding register (of specified register addresses).

Example:

Writing of the control word (BUS) (ID 2001) of an MMX frequency inverter with the slave address 5.

Master request: 05 06 07D0 0003 C2C8 (hex)

Hex	Name
05	Slave address
06	Function code (here: Writing of a holding register)
07D0	2000 (dec): The ID number of the written register is 2001 (dec) as the master PLC has an offset of +1
0003	Content (2 bytes) for register 42101: 0000 0000 0000 0011 [bin] See anticlockwise, RUN
C2C8	CRC

Slave response: 05 06 07D0 0003 C8C2 (hex)

The slave response is a copy of the master request if it is a normal response.

Hex	Name
05	Slave address
06	Function code (here: Writing of a holding register)
07D0	2000 (dec): The ID number of the first requested register is 2001 (dec) as the master PLC has an offset of +1
0003	Content (2 bytes) for register 42101: 0000 0000 0000 0011 (bin) See anticlockwise, RUN
C8C2	CRC

Function code 06 (hex) can be used for broadcasting.

Function Code 10 (hex): Writing of the Holding Registers

This function writes data to a number of consecutive holding registers (of specified register addresses).

CAUTION

Although the registers to be written are consecutive, the ID numbers of the parameter list are not. Only the ID numbers in the process data list are consecutive.

Example:

Writing of the control word (ID 2001) of the general control word (ID 2002) and the speed setpoint (ID2003) of an MMX frequency inverter with the slave address 5.

Master request:
05 10 07D0 0003 06 0001 0000 2710 D125 (hex)

Hex	Name
05	Slave address
10	Function code (here: Writing of the holding registers)
07D0	2000 (dec): The ID number of the first written register is 2001 (dec) as the master PLC has an offset of +1
0003	Total number of requested registers (42001–42103)
06	Number of consecutive data bytes (3 registers x 2 bytes = 6 bytes)
0001	Content (2 bytes) for register 42101: 0000 0000 0000 0001 (bin) (Start command)
0000	Content (2 bytes) for register 42102: 0000 (dec) (no content, as not used)
2710	Content (2 bytes) for register 42103: 10.000 (dec) (frequency setpoint = 100.00%)
D125	CRC

Slave response: 05 10 07D0 0003 8101 (hex)

Hex	Name
05	Slave address
10	Function code (here: Writing of the holding registers)
07D0	2000 (dec): The ID number of the first written register is 2001 (dec) as the master PLC has an offset of +1
0003	Total number of requested registers (42001–42103)
8101	CRC

Function code 10 (hex) can be used for broadcasting.

Appendix A

Special Technical Data

The following tables show the technical data of the M-Max frequency inverter in the individual power classes with the allocated motor output.

The motor output allocation is based on the rated operational current.

The motor output designates the respective active power output to the drive shaft of a normal, four-pole, internally or externally ventilated three-phase asynchronous motor with 1.500 RPM at 50 Hz or 1.800 RPM at 60 Hz.

Device Series MMX11

MMX11AA…N0-0		Symbols ①	Unit	1D7	2D4	2D8	3D7	4D8
Rated operational current		I_e	A	1.7	2.4	2.8	3.7	4.8
Overload current for 60s every 600s at 122°F (50°C)		I_L	A	2.6	3.6	4.2	5.6	7.2
Starting current for 2s every 20s at 122°F (50°C)		I_L	A	3.4	4.8	5.6	7.4	9.6
Apparent power at rated operation ②	230V	S	kVA	0.68	0.96	1.12	1.47	1.91
	240V	S	kVA	0.71	0.99	1.16	1.54	1.99
Assigned motor rating (230V) ②		P	kW	0.25	0.37	0.55	0.75	1.1
			HP	1/4	1/2	3/4	1	1-1/2
Power side (primary side)								
Number of phases				Single-phase or two-phase				
Rated voltage		U_{LN}	V	110 –15%–120 +10%, 50/60 Hz (94–132V ±0%, 45–66 Hz ±0%)				
Input current		I_{LN}	A	9.2	11.6	12.4	15	16.5
Maximum leakage current to ground (PE) without motor								
MMX11...N_		I_{PE}	mA					
Braking torque								
Default		M/M_N	%	≦30				
DC braking		I/I_e	%	≦100, adjustable				
Pulse frequency		f_{PWM}	kHz	6 (adjustable 1–16)				
Heat dissipation at rated operational current (I_e)		P_v	W	22.3	27.9	33.4	40.3	49.2
Efficiency		h		0.91	0.92	0.94	0.95	0.96
Fan (device-internal, temperature-controlled)				✓	✓	✓	✓	✓
Installation size				FS2	FS2	FS2	FS2	FS3
Weight		m	Lbs (kg)	1.5 (0.7)	1.5 (0.7)	1.5 (0.7)	1.5 (0.7)	2.2 (0.99)

Notes

① Symbols used in technical data and formulas.

② Internal voltage doubler circuit:
U_{LN} = 115V → U_2 = 230V
U_{LN} = 120V → U_2 = 240V

③ Guide value (calculated), no standard rating.

Device Series MMX12

MMX12AA…F0-0		Symbols ①	Unit	1D7	2D4	2D8	3D7	4D8	7D0	9D6
Rated operational current		I_e	A	1.7	2.4	2.8	3.7	4.8	7	9.6
Overload current for 60s every 600s at 122°F (50°C)		I_L	A	2.6	3.6	4.2	5.6	7.2	10.4	14.4
Starting current for 2s every 20s at 122°F (50°C)		I_L	A	3.4	4.8	5.6	7.4	9.6	14	19.2
Apparent power at rated operation	230V	S	kVA	0.68	0.96	1.12	1.47	1.91	2.79	3.82
	240V	S	kVA	0.71	0.99	1.16	1.54	1.99	2.91	3.99
Assigned motor rating	230V	P	kW	0.25	0.37	0.55	0.75	1.1	1.5	2.2
			HP	1/4	1/2	3/4	1	1-1/2	2	3
Power side (primary side)										
Number of phases				Single-phase or two-phase						
Rated voltage		U_{LN}	V	208V –15%–240V +10%, 50/60 Hz (177–264V ±0%, 45–66 Hz ±0%)						
Input current		I_{LN}	A	4.2	5.7	6.6	8.3	11.2	14.1	15.8
Maximum leakage current to ground (PE) without motor										
MMX12...N_		I_{PE}	mA							
MMX12...F_		I_{PE}	mA	15.4			11.8			24.4
Braking torque										
Default		M/M_N	%	≦30						
DC braking		I/I_e	%	≦100, adjustable						
Pulse frequency		f_{PWM}	kHz	6 (adjustable 1–16)						
Heat dissipation at rated operational current (I_e)		P_v	W	17.9	24.6	29.2	40.2	49.6	66.8	78.1
Efficiency		h		0.93	0.93	0.95	0.95	0.95	0.96	0.96
Fan (device-internal, temperature-controlled)				✓	✓	✓	✓	✓	✓	✓
Installation size				FS1	FS1	FS1	FS2	FS2	FS2	FS3
Weight		m	Lbs (kg)	1.2 (0.55)	1.2 (0.55)	1.2 (0.55)	1.5 (0.7)	1.5 (0.7)	1.5 (0.7)	2.2 (0.99)

Notes

① Symbols used in technical data and formulas.

② Guide value (calculated), no standard rating.

Device Series MMX32

MMX32AA…NO-0		Symbols ①	Unit	1D7	2D4	2D8	3D7	4D8	7D0	011	017	025	031	038
Rated operational current		I_e	A	1.7	2.4	2.8	3.7	4.8	7	11	17.5	25	31	38
Overload current for 60s every 600s at 122°F (50°C)		I_L	A	2.6	3.6	4.2	5.6	7.2	10.4	14.4	26.3	37.5	46.5	57
Starting current for 2s every 20s at 122°F (50°C)		I_L	A	3.4	4.8	5.6	7.4	9.6	14	19.2	35	50	62	76
Apparent power at rated operation	230V	S	kVA	0.68	0.96	1.12	1.47	1.91	2.79	3.82	7	10	12.4	15.1
	240V	S	kVA	0.71	0.99	1.16	1.54	1.99	2.91	3.99	7.3	10.4	12.9	15.8
Assigned motor rating	230V	P	kW	0.25	0.37	0.55	0.75	1.1	1.5	2.2	4	5.5	7.5	11
			HP	1/4	1/2	3/4	1	1-1/2	2	3	5	7.5	10	15
Power side (primary side)														
Number of phases				Three-phase										
Rated voltage		U_{LN}	V	208V –15%–240V +10%, 50/60 Hz (177–264V ±0%, 45–66 Hz ±0%)										
Input current		I_{LN}	A	2.7	3.5	3.8	4.3	6.8	8.4	13.4	20.6	30.3	36.6	44.6
Maximum leakage current to ground (PE) without motor														
MMX32...N_		I_{PE}	mA	8.6	8.6	8.6	16.1	16.1	16.1	8.6	14	14	9	9
Braking torque														
Default		M/M_N	%	≦30	≦30	≦30	≦30	≦30	≦30	≦30	≦30	≦30	≦30	≦30
Brake chopper with external braking resistance				—	—	—	Max. 100% rated operational current I_e with external braking resistance							
Minimum braking resistance		R_B	ohms	—	—	—	35	35	35	26	14	14	9	9
Switch-on threshold for the braking resistor		U_{DC}	Vdc	—	—	—	Programmable P12.6				440	440	440	440
DC braking		I/I_e	%	≦100, adjustable										
Pulse frequency		f_{PWM}	kHz	6 (adjustable 1–16)										
Heat dissipation at rated operational current (I_e)		P_v	W	17.4	23.7	28.3	37.9	48.4	63.8	84	②	②	②	②
Efficiency		h		0.93	0.94	0.95	0.95	0.96	0.96	0.96	②	②	②	②
Fan (device-internal, temperature-controlled)				✓	✓	✓	✓	✓	✓	✓	✓	✓	✓	✓
Installation size				FS1	FS1	FS1	FS2	FS2	FS2	FS3	FS4	FS4	FS5	FS5
Weight		m	Lbs (kg)	1.2 (0.55)	1.2 (0.55)	1.2 (0.55)	1.5 (0.7)	1.5 (0.7)	1.5 (0.7)	2.2 (0.99)	17.6 (8.0)	17.6 (8.0)	22.1 (10.0)	22.1 (10.0)

Notes

① Symbols used in technical data and formulas.

② Contact the Eaton Drives Technical Resource Center for technical data.

Device Series MMX34

MMX34AA…F0-0		Symbols ①	Unit	1D3	1D9	2D4	3D3	4D3	5D6	7D6
Rated operational current (I_e)		I_e	A	1.3	1.9	2.4	3.3	4.3	5.6	7.6
Overload current for 60s every 600s at 122°F (50°C)		I_L	A	2	2.9	3.6	5	6.5	8.4	11.4
Starting current for 2s every 20s at 122°F (50°C)		I_L	A	2.6	3.8	4.8	6.6	8.6	11.2	15.2
Apparent power in rated operation	400V	S	kVA	0.9	1.32	1.66	2.29	2.98	3.88	5.27
	480V	S	kVA	1.08	1.56	2	2.74	3.57	4.66	6.32
Assigned motor rating	400V	P	kW	0.37	0.55	0.75	1.1	1.5	2.2	3
	460V		HP	1/2	3/4	1	1-1/2	2	3	4 ②
Power side (Primary side)										
Number of phases				Three-phase						
Rated voltage		U_{LN}	V	380V –15%–480V +10%, 50/60 Hz (323–528V ±0%, 45–66 Hz ±0%)						
Input current		I_{LN}	A	2.2	2.8	3.2	4	5.6	7.3	9.6
Maximum leakage current to ground (PE) without motor										
MMX34...N_		I_{PE}	mA							
MMX34...F_		I_{PE}	mA	45.1	45.1	45.1	25.1	25.1	25.1	24.9
Braking torque										
Default		I/I_e	%	≦30	≦30	≦30	≦30	≦30	≦30	≦30
Brake chopper with external braking resistance				—	—	—	Max. 100% rated operational current I_e with external braking resistance			
Minimum braking resistance		R_B	ohms	—	—	—	75	75	75	54
Switch-on threshold for the braking transistor		U_{DC}	Vdc	—	—	—	Programmable P12.6			
DC braking		I/I_e	%	≦100, adjustable						
Pulse frequency		f_{PWM}	kHz	6 (adjustable 1–16)						
Heat dissipation at rated operational current (I_e)		P_v	W	21.7	29.7	31.7	51.5	66.4	88.3	116.9
Efficiency		h		0.94	0.95	0.95	0.95	0.96	0.96	0.96
Fan (device-internal, temperature-controlled)				✓	✓	✓	✓	✓	✓	✓
Installation size				FS1	FS1	FS1	FS2	FS2	FS2	FS3
Weight		m	Lbs (kg)	1.2 (0.55)	1.2 (0.55)	1.2 (0.55)	1.5 (0.7)	1.5 (0.7)	1.5 (0.7)	2.2 (0.99)

Notes

① Symbols used in technical data and formulas.

② Guide value (calculated), no standard rating.

Device Series MMX34, continued

MMX34AA…F0-0		Symbols ①	Unit	9D0	012	014	016	023	031	038
Rated operational current (I_e)		I_e	A	9	12	14	16	23	31	38
Overload current for 60s every 600s at 122°F (50°C)		I_L	A	13.5	18	21	24	34.5	46.5	57
Starting current for 2s every 20s at 122°F (50°C)		I_L	A	18	24	28	32	46	62	76
Apparent power in rated operation	400V	S	kVA	6.24	8.32	9.7	11	16	21.5	26.3
	480V	S	kVA	7.48	9.98	11.64	13.3	19.1	25.7	31.6
Assigned motor rating	400V	P	kW	4	5.5	7.5 ②	7.5	11	15	18.5
	460V		HP	5	7-1/2	10	10	15	20	25
Power side (Primary side)										
Number of phases				Three-phase						
Rated voltage		U_{LN}	V	380V –15%–480V +10%, 50/60 Hz (323–528V ±0%, 45–66 Hz ±0%)						
Input current		I_{LN}	A	11.5	14.9	18.7	17.1	25.5	33	41.7
Maximum leakage current to ground (PE) without motor										
MMX34...N_		I_{PE}	mA	③	③	③	③	③	③	③
MMX34...F_		I_{PE}	mA	③	③	③	③	③	③	③
Braking torque										
Default (standard)		I/I_e	%	≦30	≦30	≦30	≦30	≦30	≦30	≦30
Brake chopper with external braking resistance				Max. 100% rated operational current I_e with external braking resistance						
Minimum braking resistance		R_B	ohms	54	54	54	28	28	17	17
Switch-on threshold for the braking transistor		U_{DC}	Vdc	Programmable P12.6			765	765	765	765
DC braking		I/I_e	%	≦100, adjustable						
Pulse frequency		f_{PWM}	kHz	6 (adjustable 1–16)		1–4	6 (adjustable 1–16)			
Heat dissipation at rated operational current (I_e)		P_v	W	136.2	185.1	223.7	③	③	③	③
Efficiency		h		0.97	0.97	0.97	③	③	③	③
Fan (device-internal, temperature-controlled)				✓	✓	✓	✓	✓	✓	✓
Installation size				FS3	FS3	FS3	FS4	FS4	FS5	FS5
Weight		m	Lbs (kg)	2.2 (0.99)	2.2 (0.99)	2.2 (0.99)	17.6 (8.0)	17.6 (8.0)	22.1 (10.0)	22.1 (10.0)

Notes

① Symbols used in technical data and formulas.
② Allocated motor output with reduced load torque (about 10%).
③ Contact the Eaton Drives Technical Resource Center for technical data.

Device Series MMX35

MMX35AA…N0-0		Symbols ①	Unit	1D7	2D7	3D9	6D1	9D0
Rated operational current (I_e)		I_e	A	1.7	2.7	3.9	6.1	9.0
Overload current for 60s every 600s at 122°F (50°C)		I_L	A	2.6	4	5.9	9.2	13.5
Starting current for 2s every 20s at 122°F (50°C)		I_L	A	3.4	5.4	7.8	12.2	18.0
Assigned motor rating	575V	HP	HP	1	2	3	5	7.5
Power side (Primary side)								
Number of phases				Three-phase				
Rated voltage		U_{LN}	V	575V –15%–575V +10%, 60 Hz				
Input current		I_{LN}	A	2	3.6	5	7.6	10.4
Maximum leakage current to ground (PE) without motor								
MMX35...N_		I_{PE}	mA	—	—	—	—	—
Braking torque								
Default		I/I_e	%	≦30				
Brake chopper with external braking resistance				Max. 100% rated operational current I_e with external braking resistance				
Minimum braking resistance		R_B	ohms	103	103	103	103	103
Switch-on threshold for the braking transistor		U_{DC}	Vdc	Programmable P12.6				
DC braking		I/I_e	%	≦100, adjustable				
Pulse frequency		f_{PWM}	kHz	6 (adjustable 1–16)				
Heat dissipation at rated operational current (I_e)		P_v	W	190	190	②	②	②
Efficiency		h		97.6	97.6	②	②	②
Fan (device-internal, temperature-controlled)				✓	✓	✓	✓	✓
Installation size				FS3	FS3	FS3	FS3	FS3
Weight		m	Lbs (kg)	2.2 (0.99)	2.2 (0.99)	2.2 (0.99)	2.2 (0.99)	2.2 (0.99)

Notes

① Symbols used in technical data and formulas.

② Contact the Eaton Drives Technical Resource Center for technical data.

Dimensions and Frame Sizes

Approximate Dimensions in inches (mm)

Dimensions and Frame Sizes, FS1–FS3 (FS = Frame Size)

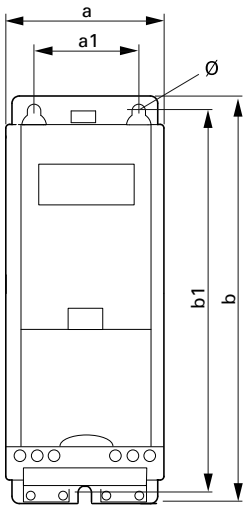

FS1

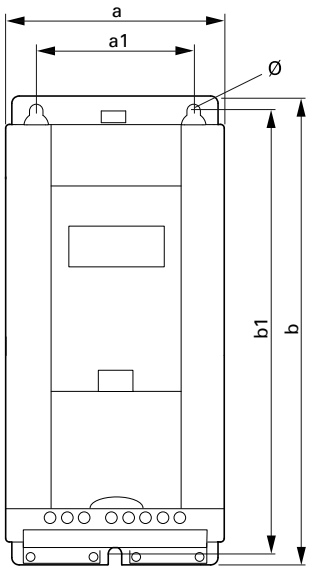

FS2

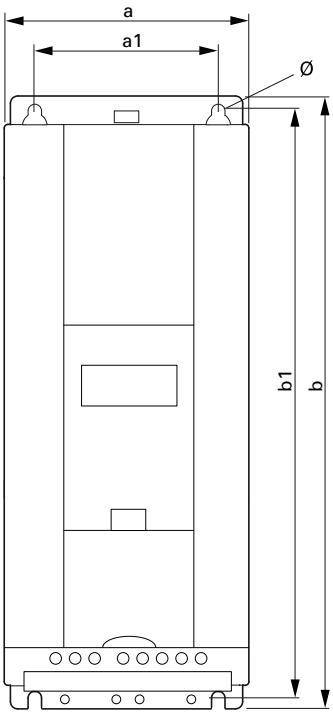

FS3

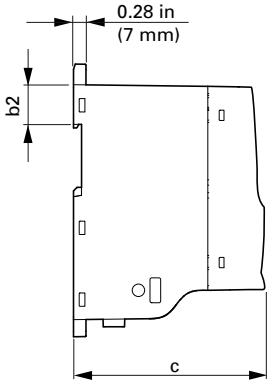

Approximate Dimensions in inches (mm)

Dimensions and Frame Sizes, FS4 and FS5 (FS = Frame Size)

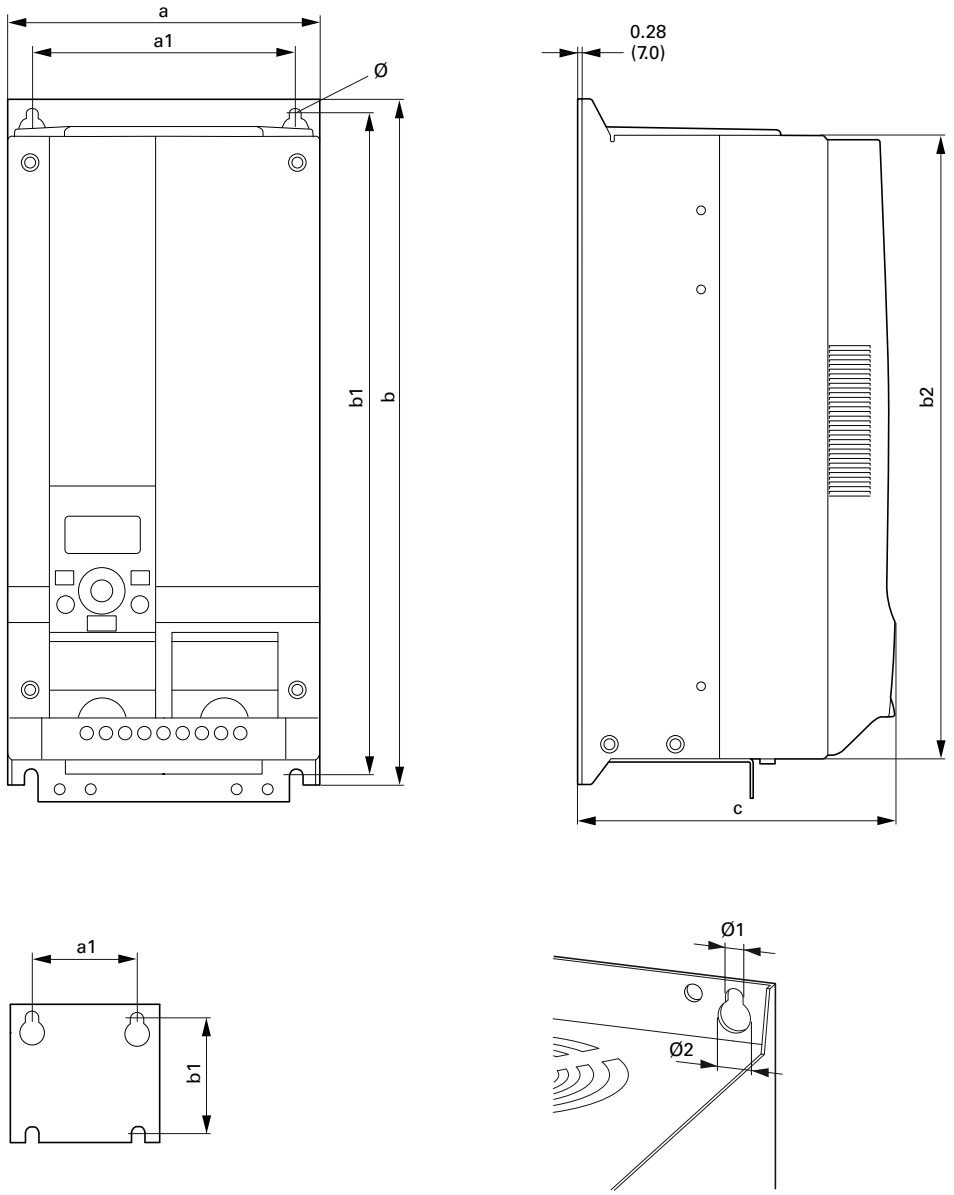

Dimensions and Frame Sizes

Part Number	Approximate Dimensions in inches (mm) a	a1	b	b1	b2	c	Ø, Ø1	Ø2	Installation Size
MMX12AA1D7_ MMX12AA2D4_ MMX12AA2D8_	2.60 (66)	1.50 (38)	6.30 (160)	5.79 (147)	1.26 (32)	4.02 (102)	0.18 (4.5)	—	FS1
MMX32AA1D7_ MMX32AA2D4_ MMX32AA2D8_									
MMX34AA1D3_ MMX34AA1D9_ MMX34AA2D4_									
MMX11AA1D7_ MMX11AA2D4_ MMX11AA2D8_ MMX11AA3D7_	3.54 (90)	2.46 (62.5)	7.68 (195)	7.17 (182)	1.26 (32)	4.14 (105)	2.17 (5.5)	—	FS2
MMX12AA3D7_ MMX12AA4D8_ MMX12AA7D0_									
MMX32AA3D7_ MMX32AA4D8_ MMX32AA7D0_									
MMX34AA3D3_ MMX34AA4D3_ MMX34AA5D6_									
MMX11AA4D8_	3.94 (100)	2.95 (75)	9.96 (253)	9.53 (242)	1.34 (34)	4.41 (112)	2.17 (5.5)	—	FS3
MMX12AA9D6_									
MMX32AA011_									
MMX34AA7D6_ MMX34AA9D0_ MMX34AA012_ MMX34AA014_									
MMX35AA1D7_ MMX35AA2D7_ MMX35AA3D9_ MMX35AA6D1_ MMX35AA9D0_									
MMX32AA012_ MMX32AA017_ MMX32AA025_	6.50 (165.0)	5.51 (140.0)	14.57 (370.0)	13.82 (351.0)	13.27 (337.0)	6.61 (168.0)	0.28 (7.0)	0.55 (14.0)	FS4
MMX34AA016_ MMX34AA023_									
MMX32AA031_ MMX32AA038_	6.50 (165.0)	5.51 (140.0)	14.57 (414.0)	13.82 (398.0)	15.08 (383.0)	8.07 (205.0)	0.28 (7.0)	0.55 (14.0)	FS5
MMX34AA031_ MMX34AA038_									

Note

1 in = 25.4 mm, 1 mm = 0.0394 in

PC Interface Card

MMX-COM-PC

Equipment Supplied MMX-COM-PC

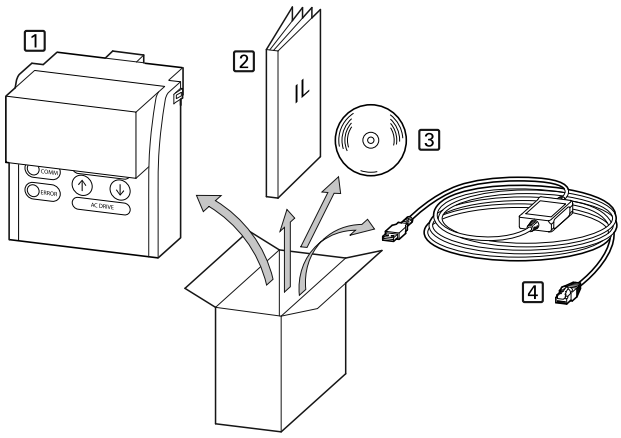

1. MMX-COM-PC connection module
2. Instructional leaflet IL04012004Z
3. CD with MaxConnect parameter software and driver software
4. Connection cable with interface converter

Note: The MMX-COM-PC adapter is not supplied with the M-Max frequency inverter.

The MMX-COM-PC PC connection module enables the communication between the M-Max frequency inverter and a PC with the Windows operating system (point-to-point connection). Together with the MaxConnect parameter software, this enables you to:

- Upload and download all parameters
- Store the parameters, compare them and print them in parameter lists
- Graphically show time sequences in the Monitor display. The oscillograms can be stored in the PC and printed out

The MMX-COM-PC interface module can be fitted and connected without any tools required. The MMX-COM-PC module is fitted on the front of the MMX frequency inverter.

Fitting the MMX-COM-PC Connection Module

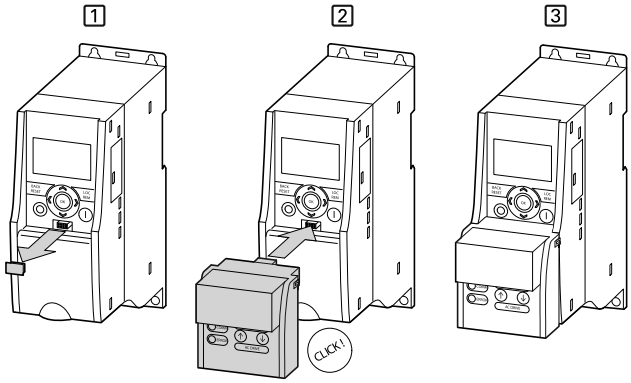

1. Remove the interface cover on the frequency inverter (do not discard)
2. Fitting the MMX-COM-PC
3. Ready for operation

To remove, push in the two retaining clips on the side. The connection module can then be pulled off from the front, see step [1] in the figure below.

Removing the MMX-COM-PC Connection Module

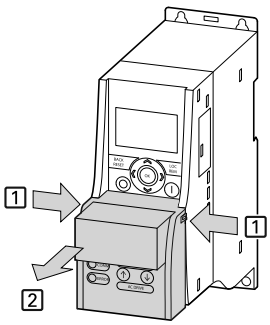

When the power supply of the MMX frequency inverter is switched on with the MMX-COM-PC fitted, the parameters can be copied via the two function keys:

- Upload: The parameters from the frequency inverter (AC-DRIVE) are loaded in MMX-COM-PC (ADAPTER)
- Download: The parameters are loaded from the MMX-COM-PC (ADAPTER) to the frequency inverter (AC-DRIVES)

The active data transfer is indicated by the green flashing COMM LED. The ERROR LED will be lit red in the event of a faulty or interrupted data transfer.

Upload

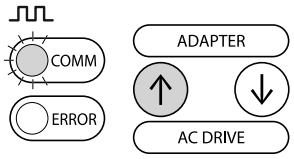

Download

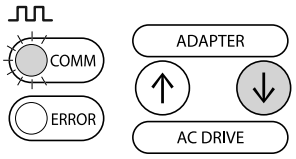

The MMX-COM-PC can also be supplied with a 9V battery or via an external 24V voltage (DC) instead of line voltage of the frequency inverters.

Technical data for power supply:

- 9V block battery, current consumption around 60 mA
- 24V plug power supply unit with 5.5 mm DC plug

Inserting the 9V Block Battery

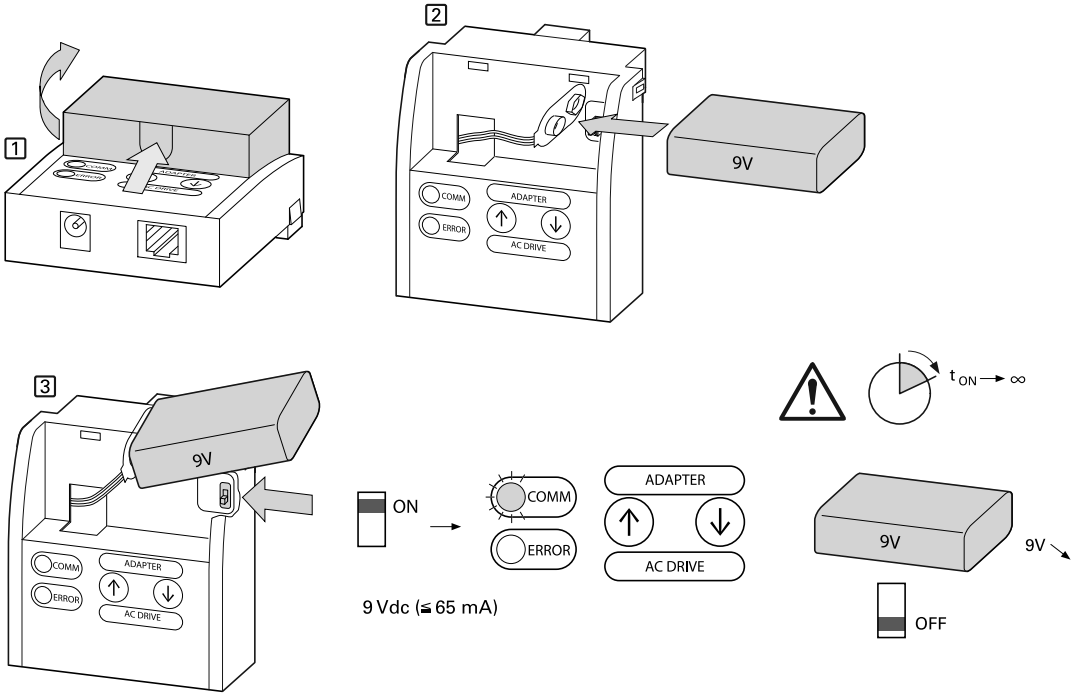

1. Open the cover
2. 9V block battery plug connection
3. Switch the microswitch to ON. COMM LED is lit

Note: Current consumption around 65 mA. Switch off 9V block battery after use (microswitch OFF) or remove battery (discharged within around 24h).

Power Supply

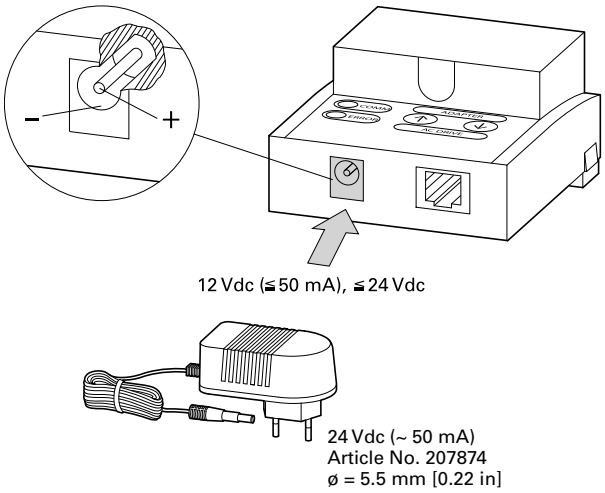

The MMX-COM-PC can also be fed with a 12 to 24 Vdc external power supply. The connection is implemented using a 5.5 mm power supply plug.

Note: Further information on using the MMX-COM-PC connection module is provided in IL04012004Z.

MaxConnect

The MaxConnect parameter software allows fast parameter assignment, operation, diagnostics and documentation (printout and storage of parameter lists) via a PC and the data transfer with an M-Max frequency inverter. MaxConnect is stored on the enclosed CD and is available free of charge for download. It may also be downloaded from the internet. Visit www.Eaton.com/drives.

Parameter Software MaxConnect

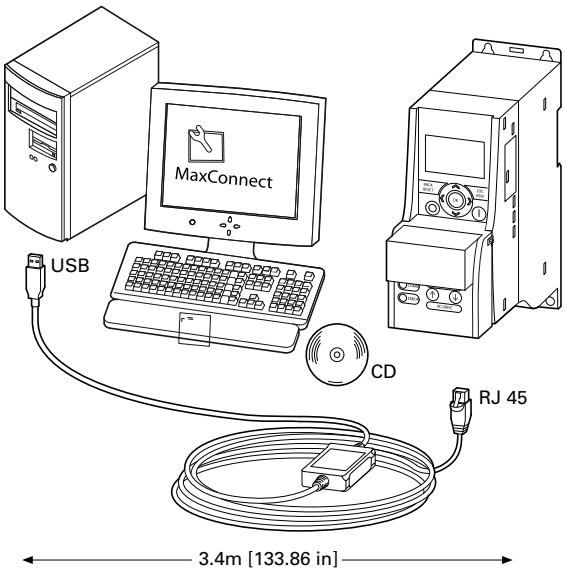

Mounting Frame for Fieldbus Connection

MMX-NET-XA

The MMX-NET-XA mounting frame enables the mounting and connection of fieldbus interface cards to the frequency inverters in frame sizes FS1, FS2 and FS3.

MMX-NET-XA consists of the two housing sections:

- The mounting plate with the 24-pole slot, pluggable connection cable and the ground terminal (shielding, GND, PE)
- The cover for holding and protecting the fieldbus interface card

Note: Detailed installation instructions are provided in IL040120009Z.

MMX-NET-XA Mounting Frame

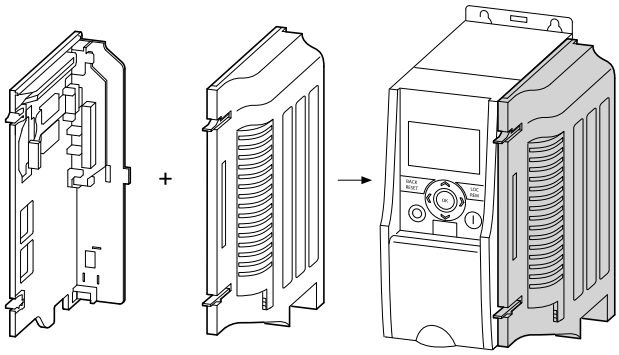

Note: The MMX-NET-XA mounting frame is not supplied with the M-Max frequency inverter.

The MMX-NET-XA mounting plate is fitted on the right-hand side (view from front of the keypad) of the MMX frequency inverter:

- First remove the cover of the interface in the MMX

Removing the Interface Cover on the M-Max

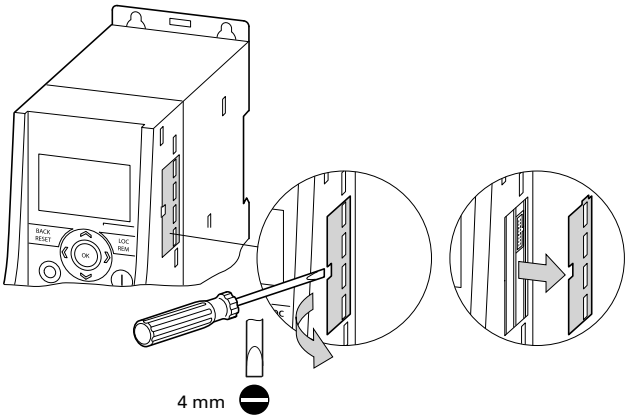

The remaining installation steps are then carried out without any tools using the cutouts provided in the housing of the MMX (snap fixing).

- Fit the plug and connection cable onto the interface of the MMX

Fitting and Connecting the Mounting Plate of the MMX-NET-XA

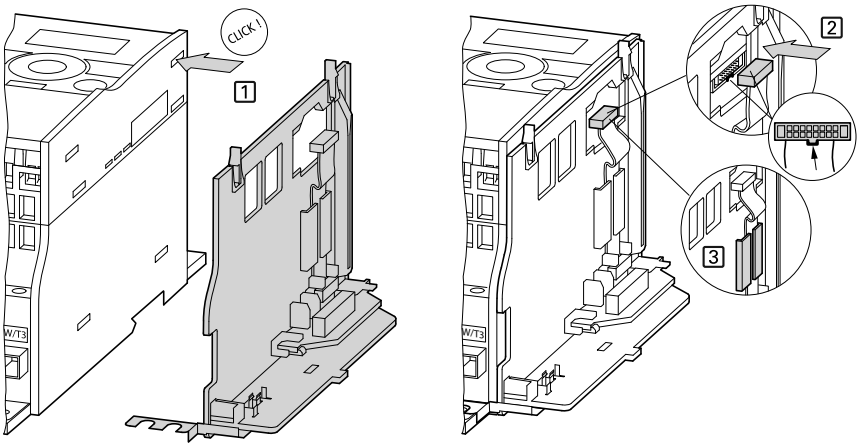

You can then fit a fieldbus interface card (for example, PROFIBUS DP, and so on) in the cover of the mounting frame.

Note: Before installing the fieldbus interface card check whether the plug connection provided, such as GND or bus terminal resistor have to be changed.

Cover of the MMX-NET-XA for Holding the Fieldbus Interface Card

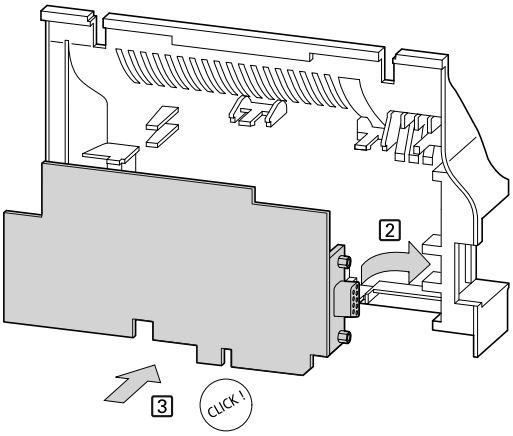

- Then fit the cover with the inserted fieldbus interface card onto the already fitted and installed mounting plate of the MMX-NET-XA

Connecting the Interface Card with the Frequency Inverter

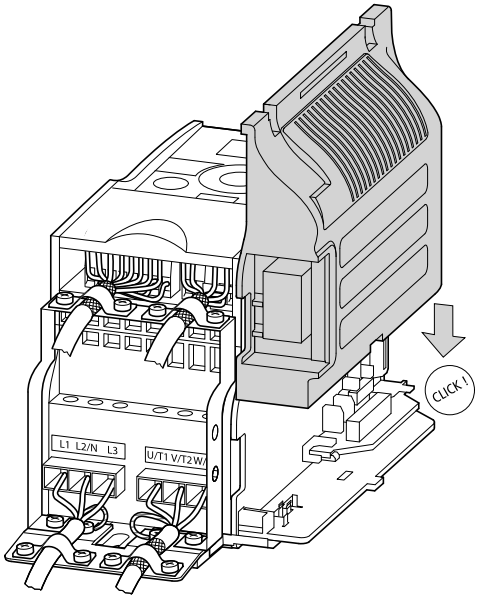

- Make the connections to the selected fieldbus system through the opening in the mounting frame directly on the card

MMX-NET-XB

The MMX-NET-XB interface module enables the flush mounting and connection of fieldbus interface cards to the frequency inverters in frame sizes FS4 and FS5.

MMX-NET-XB Interface Module

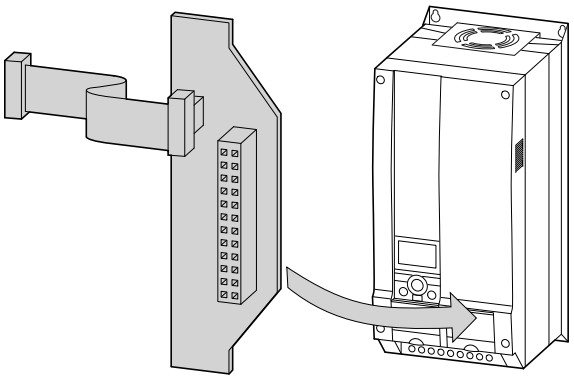

Note: The MMX-NET-XB interface module is not supplied with the M-Max frequency inverter.

Note: Detailed installation instructions are provided in IL04012010Z.

The MMX-NET-XC interface module is fitted under the cover on the right-hand side (view from front of the keypad) of the MMX frequency inverter:

- First remove the cover of the frequency inverter (4 screws)

Remove Cover (FS4, FS5)

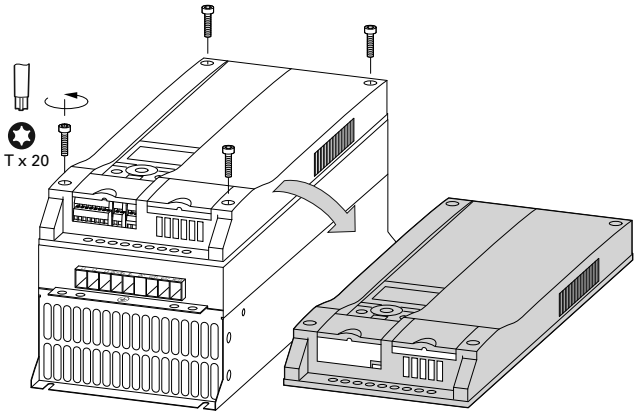

Accessories are provided with the MMX-NET-XB for fitting the fieldbus interface card and interface module.

Mounting Accessories for FS4, FS5

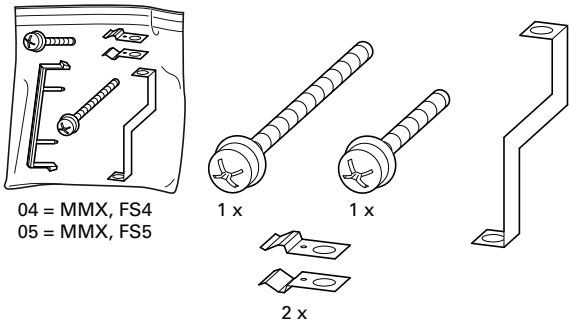

- To install, remove the screw in the bottom right corner of the frequency inverter (chassis connection, board)
- Then fit the metal bracket marked 04 (= FS4) or 05 (= FS5) with this screw
- At the top end of the metal bracket fasten the two metal clips

The fieldbus interface cards with pluggable screw terminals must be plugged in to support the terminals of the plastic strip.

Plastic Bridge for Holding the Control Terminals

(For example: OPTE3 0 XMX-NET-PS-A)

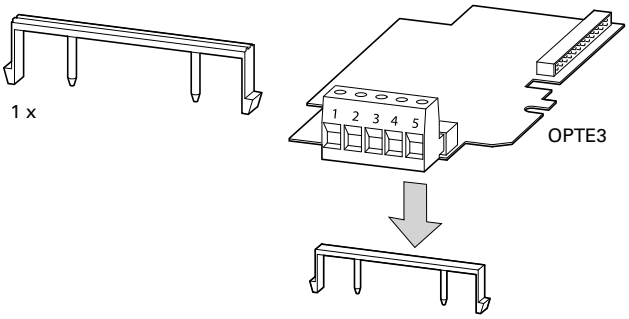

- Then connect the required fieldbus interface card to the MMX-NET-XB interface module

The mounting is carried out without tools at the corresponding cutouts in the housing of the MMX (snap fitting). Plug and connection cable are then fitted to the interface of the MMX (below the LCD display unit).

Connecting the MMX-NET-XB Interface Module with the Fieldbus Interface Cards

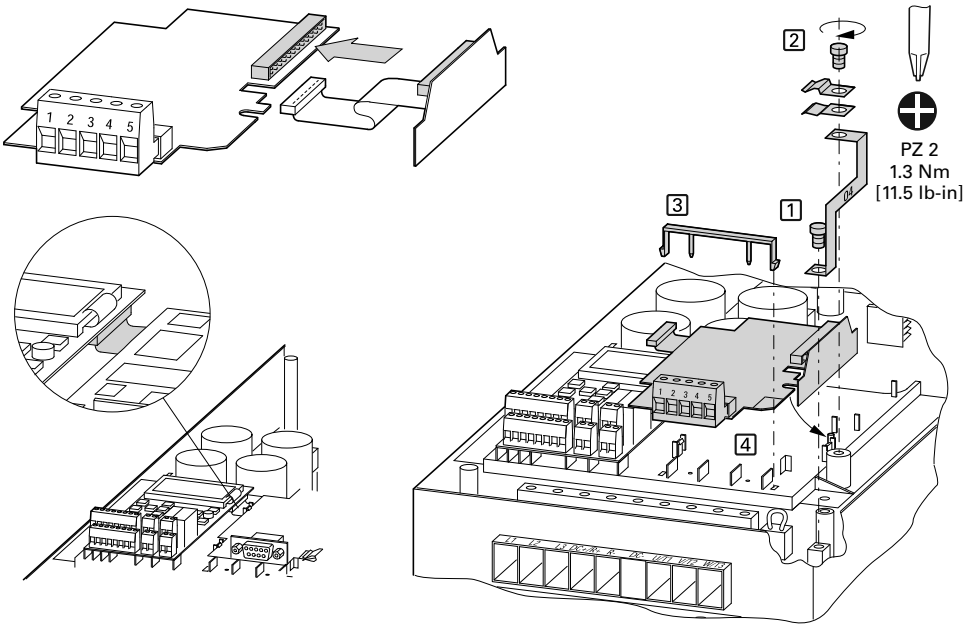

Note: Before installing the fieldbus interface card check whether the plug connection provided, such as GND or bus terminal resistor have to be changed.

- Fit the combination of MMX-NET-XB interface module and fieldbus interface card and connect them

PROFIBUS DP Fieldbus Interface Card

Note: The PROFIBUS DP fieldbus interface card XMX-NET-PD-A or XMX-NET-PS-A are not supplied with the M-Max frequency inverter.

XMX-NET-PD-A and XMX-NET-PS-A enable the connection (slave) of frequency inverters of the M-Max series to the standard PROFIBUS DP fieldbus.

Note: The optional MMX-NET-XA mounting frame is required for mounting and connecting the MMX frequency inverter.

Technical data:

- Communication protocol: PROFIdrive (PROFIBUS profile for variable speed drives)
- Data transfer: RS485, half-duplex

Note: Further information on hardware and engineering the XMX-NET-NET-P_ interface card is provided in the manual MN04012002Z.

XMX-NET-PD-A

The fieldbus connection is implemented with a nine-pole Sub-D plug connector.

XMX-NET-PD-A PROFIBUS DP Fieldbus Interface Card with Nine-Pole Sub-D Plug Connection

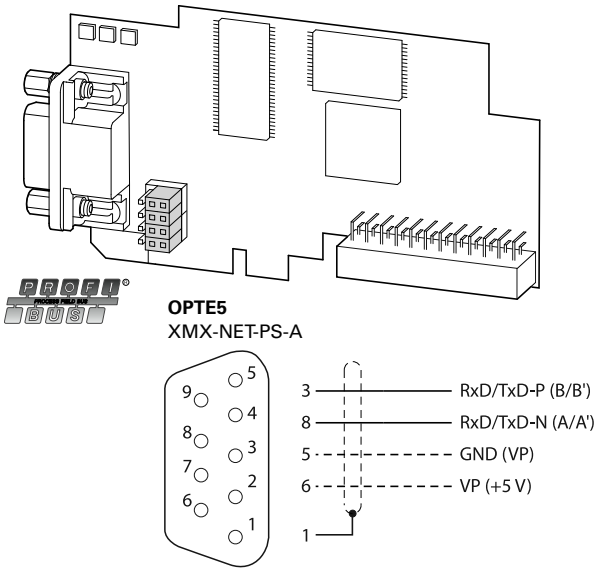

Note: Detailed installation instructions are provided in IL04012008Z.

XMX-NET-PS-A

The fieldbus connection is implemented with a pluggable five-pole screw terminal.

Fieldbus Connection

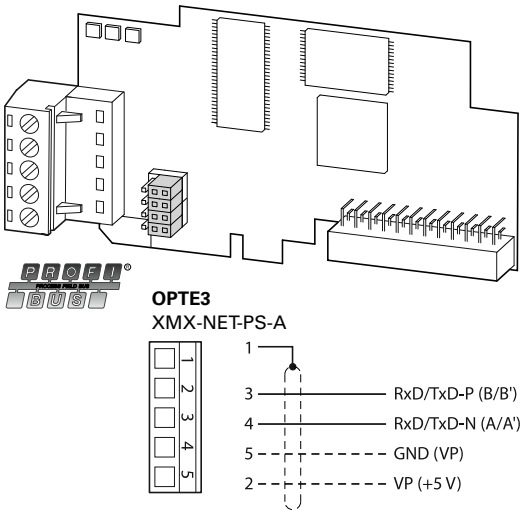

Note: Detailed installation instructions are provided in IL04012008Z.

XMX-NET-DN-A

XMX-NET-DN-A DeviceNet Fieldbus Interface Card

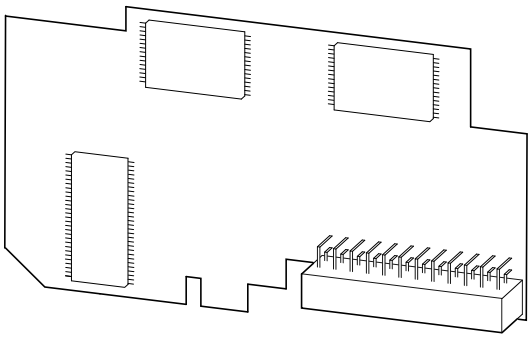

Note: The DeviceNet fieldbus internet card XMX-NET-DN-A is not supplied with the M-Max frequency inverter.

The XMX-NET-DN-A enables the connection (slave) of frequency inverters of the M-Max series to the standard DeviceNet fieldbus.

Note: The optional MMX-NET-XA mounting frame is required for mounting and connecting the M-Max frequency inverter.

Cables, Fuses and Disconnect Devices

The cross-sections of the cables and cable protection fuses used must correspond with local standards.

For an installation in accordance with UL Standards, the fuses and copper cable that are UL-approved and have a heat-resistance of 60–75°C are to be used.

Use power cables with insulation according to the specified mains voltages for the permanent installation. A shielded cable is not required on the mains side. On the motor side however, a complete (360°) low-impedance shielded cable is necessary.

The length of the motor cable depends on the radio interference class and is a maximum of 30m at M-Max.

CAUTION

Fuses and cables selected must always comply with the applicable regulations at the installation site.

Maximum Cross-Sections

	L1, L2/N, L3		U, V, W		PE		R+, R—	
	mm²	AWG ①	mm²	AWG ①	mm²	AWG ①	mm²	AWG ①
MMX11AA1D7… MMX11AA2D4… MMX11AA2D8… MMX11AA3D7…	2 x 2.5	2 x 14	3 x 2.5	3 x 14	2.5	14	—	—
MMX11AA4D8…	2 x 6	2 x 10	3 x 6	3 x 10	—	—	—	—
MMX12AA1D7… MMX12AA2D4… MMX12AA2D8… MMX12AA3D7…	2 x 1.5	2 x 16	3 x 1.5	3 x 16	1.5	16	—	—
MMX12AA4D8… MMX12AA7D0…	2 x 2.5	2 x 14	3 x 2.5	3 x 14	2.5	14	—	—
MMX12AA9D6…	2 x 6	2 x 10	3 x 6	3 x 10	6	10	—	—
MMX32AA1D7… MMX32AA2D4… MMX32AA2D8… MMX32AA3D7…	3 x 1.5	3 x 16	3 x 1.5	3 x 16	1.5	16	—	—
MMX32AA4D8… MMX32AA7D0…	3 x 1.5	3 x 16	3 x 1.5	3 x 16	1.5	16	—	—
MMX32AA011…	3 x 2.5	3 x 14	3 x 2.5	3 x 14	2.5	14	2 x 2.5	2 x 14
MMX32AA012…	3 x 6	3 x 10	3 x 6	3 x 10	6	10	2 x 6	2 x 10
MMX32AA017… MMX32AA025…	3 x 6	3 x 10	3 x 6	3 x 10	6	10	2 x 6	2 x 10
MMX32AA031… MMX32AA038…	3 x 10	3 x 8	3 x 8	3 x 8	10	8	2 x 10	2 x 8
MMX34AA1D3… MMX34AA1D9… MMX34AA2D4… MMX34AA3D3…	3 x 1.5	3 x 16	3 x 1.5	3 x 16	1.5	16	— 2 x 1.5	— 2 x 16
MMX34AA4D3… MMX34AA5D6…	3 x 1.5	3 x 16	3 x 1.5	3 x 16	1.5	16	2 x 1.5	2 x 16
MMX34AA7D6… MMX34AA9D0… MMX34AA012	3 x 2.5	3 x 14	3 x 2.5	3 x 14	2.5	14	2 x 2.5	2 x 14
MMX34AA014…	3 x 4	3 x 12	3 x 12	3 x 12	4	12	3 x 4	2 x 12
MMX34AA016… MMX34AA023…	3 x 6	3 x 10	3 x 6	3 x 10	6	10	2 x 6	2 x 10
MMX34AA031…	3 x 10	3 x 8	3 x 8	3 x 8	10	8	2 x 10	2 x 8
MMX34AA038…	3 x 10	3 x 6	3 x 8	3 x 6	10	6	2 x 10	2 x 6
MMX35AA1D7… MMX35AA2D7…	3 x 1.5	3 x 16	3 x 1.5	3 x 16	1.5	16	2 x 1.5	2 x 16
MMX35AA3D9… MMX35AA6D1… MMX35AA9D0…	3 x 2.5	3 x 14	3 x 2.5	3 x 14	2.5	14	2 x 2.5	2 x 14

Notes

① AWG = American Wire Gauge.
② UL fuse with AWG.

Specified Fuses and Disconnect Devices

Part No. M-Max	Maximum permitted line supply voltage U_{LN} [V]	VDE [A]	UL [A] ①	Type Designation ②	Type Designation/Catalog No. ②
MMX11AA1D7…	1 AC 120V +10%	20	20	FAZ-B20/1N	—
MMX11AA2D4…	1 AC 120V +10%	20	20	FAZ-B20/1N	—
MMX11AA2D8…	1 AC 120V +10%	20	20	FAZ-B20/1N	—
MMX11AA3D7…	1 AC 120V +10%	20	20	FAZ-B20/1N	—
MMX11AA4D8…	1 AC 120V +10%	32	30	FAZ-B32/1N	—
MMX12AA1D7…	1 AC 240V +10%	10	10	FAZ-B10/1N	—
MMX12AA2D4…	1 AC 240V +10%	10	10	FAZ-B10/1N	—
MMX12AA2D8…	1 AC 240V +10%	10	10	FAZ-B10/1N	—
MMX12AA3D7…	1 AC 240V +10%	10	10	FAZ-B101/N	—
MMX12AA4D8…	1 AC 240V +10%	20	20	FAZ-B20/1N	—
MMX12AA7D0…	1 AC 240V +10%	20	20	FAZ-B20/1N	—
MMX12AA9D6…	1 AC 240V +10%	32	30	FAZ-B32/1N	—
MMX32AA1D7…	3 AC 240V +10%	6	6	FAZ-B6/3	PKM0-6.3/XTPM6P3BNL
MMX32AA2D4…	3 AC 240V +10%	6	6	FAZ-B6/3	PKM0-6.3/XTPM6P3BNL
MMX32AA2D8…	3 AC 240V +10%	6	6	FAZ-B6/3	PKM0-6.3/XTPM6P3BNL
MMX32AA3D7…	3 AC 240V +10%	6	6	FAZ-B6/3	PKM0-6.3/XTPM6P3BNL
MMX32AA4D8…	3 AC 240V +10%	10	10	FAZ-B10/3	PKM0-10/XTPM010BNL
MMX32AA7D0…	3 AC 240V +10%	10	10	FAZ-B10/3	PKM0-10/XTPM010BNL
MMX32AA011…	3 AC 240V +10%	20	20	FAZ-B20/3	PKM0-20/XTPM020BNL
MMX32AA012…	3 AC 240V +10%	20	20	FAZ-B20/3	PKM0-20/XTPM020BNL
MMX32AA017…	3 AC 240V +10%	25	25	FAZ-B25/3	PKM0-25/XTPM025BNL
MMX32AA025…	3 AC 240V +10%	32	40	FAZ-B32/3	PKM0-32/XTPM032BNL
MMX32AA031…	3 AC 240V +10%	40	40	FAZ-B40/3	PKM4-40/XTPM040BNL
MMX32AA038…	3 AC 240V +10%	50	50	FAZ-B50/3	PKM4-50/XTPM050BNL
MMX34AA1D3…	3 AC 480V +10%	6	6	FAZ-B6/3	PKM0-6.3/XTPM6P3BNL
MMX34AA1D9…	3 AC 480V +10%	6	6	FAZ-B6/3	PKM0-6.3/XTPM6P3BNL
MMX34AA2D4…	3 AC 480V +10%	6	6	FAZ-B6/3	PKM0-6.3/XTPM6P3BNL
MMX34AA3D3…	3 AC 480V +10%	6	6	FAZ-B6/3	PKM0-6.3/XTPM6P3BNL
MMX34AA4D3…	3 AC 480V +10%	10	10	FAZ-B10/3	PKM0-10/XTPM010BNL
MMX34AA5D6…	3 AC 480V +10%	10	10	FAZ-B10/3	PKM0-10/XTPM010BNL
MMX34AA7D6…	3 AC 480V +10%	20	20	FAZ-B20/3	PKM0-20/XTPM020BNL
MMX34AA9D0…	3 AC 480V +10%	20	20	FAZ-B20/3	PKM0-20/XTPM020BNL
MMX34AA012…	3 AC 480V +10%	20	20	FAZ-B20/3	PKM0-20/XTPM020BNL
MMX34AA014…	3 AC 480V +10%	25	25	FAZ-B25/3	PKM0-25/XTPM025BNL
MMX34AA016…	3 AC 480V +10%	25	25	FAZ-B25/3	PKM0-25/XTPM025BNL
MMX34AA023…	3 AC 480V +10%	32	40	FAZ-B32/3	PKM0-32/XTPM032BNL
MMX34AA031…	3 AC 480V +10%	40	40	FAZ-B40/3	PKM4-40/XTPM040BNL
MMX34AA038…	3 AC 480V +10%	50	50	FAZ-B50/3	PKM4-50/XTPM050BNL
MMX35AA1D7…	3 AC 575V +10%	6	6	FAZ-B6/3	PKM0-6.3/XTPM6P3BNL
MMX35AA2D7…	3 AC 575V +10%	6	6	FAZ-B6/3	PKM0-6.3/XTPM6P3BNL
MMX35AA3D9…	3 AC 575V +10%	6	6	FAZ-B6/3	PKM0-6.3/XTPM6P3BNL
MMX35AA6D1…	3 AC 575V +10%	10	10	FAZ-B10/3	PKM0-10/XTPM010BNL
MMX35AA9D0…	3 AC 575V +10%	20	20	FAZ-B20/3	PKM0-20/XTPM020BNL

Notes

① Fuse UL-rated, Class J, 600V.

② I_{cn} 10 kA.

List of Parameters

The abbreviations used in the parameter lists have the following meaning:

PNU	Parameter number
ID	Identification number of the parameter
RUN	Access to the parameters during operation (RUN): ✓ = Modification permissible, X = Modification only possible in STOP
ro/rw	Parameter read and write permissions via a fieldbus connection (BUS): ro = read only rw = read and write
FS	Factory setting of the parameters
User setting	User setting of the parameters

Quick Configuration (Basis)

When first switching on or after activating the default settings (S4.2 = 1), you are guided step by step through the provided parameters by the quick start assistant. The defined values are confirmed with the OK button or they can be changed to suit your application and the motor data.

The quick start assistant can be switched off in the first parameter (P1.1) by entering a zero (access to all parameters).

In parameter P1.2, you can switch to the specified application setting with the quick start assistant (see table on **Page 40**).

The quick start assistant ends this first cycle by automatically switching to frequency display (M1.1 = 0.00 Hz).

By selecting the parameter level (PAR) again, besides the selected parameters for the quick configuration, the system parameters (S) are also shown in other cycles.

Quick Start Parameter Guide (Full parameter guide begins on Page 164)

PNU	ID	Access RUN	ro/rw	Designation	Value Range	Page	FS (P1.3)	User Setting
P1.1	115	✓	**rw**	Quick start parameters	**0** = All parameters (disable) **1** = Only quick configuration parameters (enable)	**67**	1	
P1.2	540	X	**rw**	Application	**0** = Basic **1** = Pump drive **2** = Fan drive **3** = High load	**67**	0	
P1.3	1472	X	**rw**	Country specific default settings	**0** = EU **1** = NA	**67**	1	
P6.1	125	✓	**rw**	Primary remote control source	**1** = Control signal terminals (I/O) **2** = Control unit (KEYPAD) **3** = Fieldbus (BUS)	**82**	0	
P6.2	117	✓	**rw**	Primary remote speed reference	**0** = Fixed frequency (FF0) **1** = Control unit (KEYPAD) **2** = Fieldbus (BUS) **3** = AI1 (analog setpoint 1) **4** = AI2 (analog setpoint 2) **5** = Motor potentiometer	**82**	3	
P6.3	101	X	**rw**	Minimum frequency	0.00–P6.4 Hz	**83**	0.00	
P6.4	102	X	**rw**	Maximum frequency	P6.3–320.00 Hz	**83**	60.00	
P6.5	103	X	**rw**	Primary acceleration time (acc1)	0.1–3000s	**83**	3.0	
P6.6	104	X	**rw**	Primary deceleration time (dec1)	0.1–3000s	**83**	3.0	
P6.7	505	X	**rw**	Start function	**0** = Acceleration time (ramp) **1** = Flying restart circuit	**84**	0	
P6.8	506	X	**rw**	Stop function	**0** = Fee coasting **1** = Deceleration time (ramp)	**84**	0	

Quick Start Parameter Guide, continued (Full parameter guide begins on Page 161)

PNU	ID	Access RUN	ro/rw	Designation	Value Range	Page	FS (P1.3)	User Setting
P7.1	113	X	**rw**	Motor, rated operational current	0.2 x I_e–2 x I_e (see motor rating plate)	**89**	I_e	
P7.3	112	X	**rw**	Motor, rated speed	300–20000 RPM (see motor rating plate)	**89**	1720	
P7.4	120	X	**rw**	Motor, power factor (cos φ)	0.30–1.00 (see motor rating plate)	**89**	0.85	
P7.5	110	X	**rw**	Motor, rated operating voltage	180– 500V (see motor rating plate)	**89**	①	
P7.6	111	X	**rw**	Motor, rated frequency	30–320 Hz (see motor rating plate)	**89**	60.00	
P11.7	109	X	**rw**	Torque increase	0 = Deactivated 1 = Enabled	**109**	0	
M1.1	1	X	**ro**	Output frequency	Hz	**127**	0.00	

System Parameters in the Quick Start

PNU	ID	Access RUN	ro/rw	Designation	Value Range	Page	FS (P1.3)	User Setting
S1.1	833	X	**ro**	API SW ID	—	**125**	—	
S1.2	834	X	**ro**	API SW Version	—	**125**	—	
S1.3	835	X	**ro**	Power SW ID	—	**125**	—	
S1.4	836	X	**ro**	Power SW Version	—	**125**	—	
S1.5	837	X	**ro**	Application ID	—	**125**	—	
S1.6	838	X	**ro**	Application revision	—	**125**	—	
S1.6	838	X	**ro**	System load	—	**125**	—	
S2.1 ②	808	X	**ro**	Communication status	RS485 in xx.yyy format **xx** = Number of error messages (0–64) **yyy** = Number of correct messages (0–999)	**125**		
S2.2 ②	809	✓	**rw**	Fieldbus protocol	**0** = FB disabled **1** = Modbus	**125**	0	
S2.3 ②	810	✓	**rw**	Slave address	1–255	**125**	1	
S2.4 ②	811	✓	**rw**	Baud rate	**0** = 300 **1** = 600 **2** = 1200 **3** = 2400 **4** = 4800 **5** = 9600	**125**	5	

Notes

① Factory settings dependent on specific drive selected.

② These parameters are overwritten with the bus-specific parameters when a fieldbus connection (for example, CANopen) is used. The parameter values described in the manual of the fieldbus interface then apply.

System Parameters in the Quick Start, continued

PNU	ID	Access RUN	ro/rw	Designation	Value Range	Page	FS (P1.3)	User Setting
S2.6	813	✓	**rw**	Parity type	**0** = None, no, see 2 stop bits **1** = Even, see 1 stop bit **2** = Odd, see 1 stop bit	**126**	0	
S2.7	814	✓	**rw**	Communication timeout	**0** = Not used **1** = 1s **2** = 2s …255 = up to 255s	**126**	0	
S2.8	815	✓	**rw**	Reset communication status	**0** = Not used **1** = Resets parameter S2.1	**126**	0	
S3.1	827	X	**ro**	MWh counter	MWh	**126**	—	
S3.2	828	X	**ro**	Operating days (d)	0–0000 days	**126**	—	
S3.3	829	X	**ro**	Operating hours (h)	0–24 h	**126**	—	
S3.4	840	X	**ro**	RUN counter, days	0–0000 days	**126**	—	
S3.5	841	X	**ro**	RUN counter, hours	0–24 h	**126**	—	
S3.6	842	X	**ro**	Fault/alarm counter	Trip Counter: 0–0000	**126**	—	
S4.1	830	✓	**rw**	Display contrast	0–15	**126**	7	
S4.2	831	X	**rw**	Restore factory defaults	**0** = Factory setting or changed value **1** = Restores factory settings for all parameters	**126**	0	
S4.3	832	✓	**rw**	Password	0000–9999	**126**	0000	

Default I/O

Designation	Terminal	Function	Parameter
DI1	8	Start Fwd	P3.1, P3.2
DI2	9	Stop/Start Rev	P3.1, P3.3
DI3	10	Fixed Frequency B0 (12 Hz)	P3.9, P10.2
DI4	14	Fixed Frequency B1 (18 Hz)	P3.10. P10.3
DI5	15	Fault Reset	P3.7

Designation	Terminal	Function	Parameter
DI6	16	PID Controller Deactivate	P3.12
RO1 (NO)	22/23	Run	P5.1, P5.10
RO2 (NO/NC)	24/25/26	Fault	P5.2, P5.11
DO	13	Ready	P5.3, P5.9

All Parameters

When first switching on or after activating the default settings (S4.2 = 1) parameter P1.1 must be set to 0 for access to all parameters.

Parameter Selection

PNU	ID	Access RUN	ro/rw	Designation	Value Range	Page	FS (P1.3)	User Setting
P1.1	115	✓	**rw**	Quick start parameters	**0** = All parameters **1** = Only quick configuration parameters	**66/67**	1	
P1.2	540	X	**rw**	Application	**0** = Basic **1** = Pump drive **2** = Fan drive **3** = High load	**67**	0	
P1.3	1472	X	**rw**	Country specific default settings	**0** = EU **1** = USA	**67**	1	

Analog Input

PNU	ID	Access RUN	ro/rw	Designation	Value Range	Page	FS (P1.3)	User Setting
P2.1	379	✓	**rw**	AI1 signal range (analog input)	(microswitch S2) **0** = 0–10V/0–20 mA **1** = 2–10V/4–20 mA	**68**	0	
P2.2	380	✓	**rw**	AI1 custom minimum	–100.00 to 100.00%	**68**	0	
P2.3	381	✓	**rw**	AI1 custom maximum	–100.00 to 100.00%	**68**	100	
P2.4	378	✓	**rw**	AI1, filter time	0.0–10.0s	**68**	0.1	
P2.5	390	✓	**rw**	AI2 signal range (analog input)	(microswitch S3) Like P2.1	**69**	1	
P2.6	391	✓	**rw**	AI2 custom minimum	–100.00 to 100.00%	**69**	0	
P2.7	392	✓	**rw**	AI2 custom maximum	–100.00 to 100.00%	**69**	100	
P2.8	389	✓	**rw**	AI2, filter time	0.0–10.0s	**69**	0.1	

Digital Input

PNU	ID	Access RUN	ro/rw	Designation	Value Range	Page	FS (P1.3)	User Setting
P3.1	300	✓	**rw**	Start/Stop-Logic	**0** = DI1 (FWD), DI2 (REV), REAF **1** = DI1 (FWD) + DI2 = REV **2** = DI1 (Start pulse), DI2 (stop pulse) **3** = DI1 (FWD), DI2 (REV)	**72**	3	
P3.2	403	✓	**rw**	Start signal/Start FWD (1)	**0** = Deactivated **1** = Activated via control signal terminal 8 (DI1) **2** = Activated via control signal terminal 9 (DI2) **3** = Activated via control signal terminal 10 (DI3) **4** = Activated via control signal terminal 14 (DI4) **5** = Activated via control signal terminal 15 (DI5) **6** = Activated via control signal terminal 16 (DI6)	**72**	1	
P3.3	404	✓	**rw**	STOP signal/Start REV (1)	Like P3.2	**72**	2	
P3.4	412	✓	**rw**	Reverse	Like P3.2	**72**	0	
P3.5	405	X	**rw**	Ext. fault close (N/O)	Like P3.2	**72**	0	
P3.6	406	X	**rw**	Ext. fault open (N/C)	Like P3.2	**73**	0	
P3.7	414	✓	**rw**	Fault reset	Like P3.2	**73**	5	
P3.8	407	✓	**rw**	Run enable	Like P3.2	**73**	0	
P3.9	419	✓	**rw**	Fixed frequency, binary value B0	Like P3.2	**73**	3	
P3.10	420	✓	**rw**	Fixed frequency, binary value B1	Like P3.2	**73**	4	
P3.11	421	✓	**rw**	Fixed frequency, binary value B2	Like P3.2	**73**	0	
P3.12	1020	✓	**rw**	PID controller deactivate	Like P3.2	**74**	6	
P3.13	1400	—	—	(Not used)	—	—	—	
P3.14	1401	✓	**rw**	External brake, feedback signal (N/O)	Like P3.2	**74**	0	
P3.15	1402	✓	**rw**	Change acceleration/ deceleration time (acc 2/dec 2)	Like P3.2	**74**	0	
P3.16	1403	✓	**rw**	Stop acceleration/deceleration time	Like P3.2	**74**	0	
P3.17	1404	✓	**rw**	Block parameter access	Like P3.2	**74**	0	
P3.18	1405	✓	**rw**	Motor potentiometer, increase value	Like P3.2	**74**	0	
P3.19	1406	✓	**rw**	Motor potentiometer, decrease value	Like P3.2	**74**	0	

Digital Input, continued

PNU	ID	Access RUN	ro/rw	Designation	Value Range	Page	FS (P1.3)	User Setting
P3.20	1407	✓	**rw**	Motor potentiometer, set value to zero	Like P3.2	**74**	0	
P3.21	1408	✓	**rw**	PLC program start	Like P3.2	**74**	0	
P3.22	1409	✓	**rw**	PLC program pause	Like P3.2	**75**	0	
P3.23	1410	✓	**rw**	Counter, input signal	Like P3.2	**75**	0	
P3.24	1411	✓	**rw**	Counter, reset	Like P3.2	**75**	0	
P3.25	1412	✓	**rw**	Activate secondary remote control source	Like P3.2	**75**	0	
P3.26	1413	✓	**rw**	Activate secondary remote speed reference	Like P3.2	**75**	0	
P3.27	1414	✓	**rw**	Activate second parameter set (2PS)	Like P3.2	**75**	0	
P3.28	1415	✓	**rw**	Fieldbus, remote input	Like P3.2	**75**	0	
P3.29	1416	✓	**rw**	Counter reference value 1	0–65535	**75**	0	
P3.30	1417	✓	**rw**	Counter reference value 2	0–65535	**75**	0	
P3.31	1418	✓	**rw**	DI1 logic (control signal terminal 8)	**0** = N/O **1** = N/C	**75**	0	
P3.32	1419	✓	**rw**	DI2 logic (control signal terminal 9)	Like P3.31	**75**	0	
P3.33	1420	✓	**rw**	DI3 logic (control signal terminal 10)	Like P3.31	**76**	0	
P3.34	1421	✓	**rw**	DI4 logic (control signal terminal 14)	Like P3.31	**76**	0	
P3.35	1422	✓	**rw**	DI5 logic (control signal terminal 15)	Like P3.31	**76**	0	
P3.36	1423	✓	**rw**	DI6 logic (control signal terminal 16)	Like P3.31	**76**	0	
P3.37	1480	✓	**rw**	Manual mode	Like P3.2	**76**	0	

Analog Output

PNU	ID	Access RUN	ro/rw	Designation	Value Range	Page	FS (P1.3)	User Setting
P4.1	307	✓	**rw**	AO signal (Analog Output)	**0** = Deactivated **1** = Output frequency (Hz) **2** = Output current (A) **3** = Torque (%) **4** = PID controller (%)	**77**	1	
P4.2	310	✓	**rw**	AO, minimum value	**0** = 0V **1** = 2V (live-zero)	**77**	1	
P4.3	1456	✓	**rw**	AO, gain	0.00–200.00%	**77**	100.00	
P4.4	1477	✓	**rw**	AO, filter time	0.00–10.00s	**77**	0.0	

Digital Output

PNU	ID	Access RUN	ro/rw	Designation	Value Range	Page	FS (P1.3)	User Setting
P5.1	313	✓	**rw**	RO1 Signal (Relay 1 Output)	**0** = Deactivated **1** = READY **2** = RUN **3** = FAULT **4** = Error message (inverted) **5** = ALARM **6** = REV **7** = Output frequency **8** = Motor controller active **9** = Zero frequency **10** = Frequency monitoring 1 **11** = Frequency monitoring 2 **12** = PID monitoring **13** = Overtemperature signal **14** = Overcurrent control active **15** = Overvoltage control active **16** = PLC Sequence control active **17** = PLC sequence control, single step completed **18** = PLC sequence control, program cycle completed **19** = PLC sequence control, pause **20** = Counter, value 1 reached **21** = Counter, value 2 reached **22** = RUN message active **23** = Analog min reference error **24** = LOG function fulfilled **25** = PID controller, actual value monitoring **26** = External brake actuated **27** = Current monitoring **28** = Fieldbus, remote output	**78**	2	
P5.2	314	✓	**rw**	RO2 signal (relay output 2)	Like P5.1	**79**	3	
P5.3	312	✓	**rw**	DO Signal (Digital Output)	Like P5.1	**79**	1	
P5.4	315	✓	**rw**	Frequency monitoring 1	**0** = Deactivated **1** = 0.00–P5.5 Hz **2** = P5.5–P6.4 Hz	**79**	0	
P5.5	316	✓	**rw**	Frequency monitoring 1 reference value	0.00–P6.4 Hz	**80**	0.00	
P5.6	346	✓	**rw**	Frequency monitoring 2	**0** = Deactivated **1** = 0.00–P5.7 Hz **2** = P5.7–P6.4 Hz	**80**	0	
P5.7	347	✓	**rw**	Frequency monitoring 2 reference value	0.00–P6.4 Hz	**80**	0.00	
P5.8	1457	✓	**rw**	Current monitoring	0.00–P7.2A	**81**	0.00	

Digital Output, continued

PNU	ID	Access RUN	ro/rw	Designation	Value Range	Page	FS (P1.3)	User Setting
P5.9	1458	✓	**rw**	DO logic (control signal terminal 13)	**0** = N/O **1** = N/C	**81**	0	
P5.10	1331	✓	**rw**	RO1 logic (control signal terminals 22, 23)	Like P5.9	**81**	0	
P5.11	1332	✓	**rw**	RO2 logic (control signal terminal 24, 25, 26)	Like P5.9	**81**	0	
P5.12	1459	✓	**rw**	DO, on delay	0.00–320.00s	**81**	0.00	
P5.13	1460	✓	**rw**	DO, off-delay	0.00–320.00s	**81**	0.00	
P5.14	1461	✓	**rw**	RO1, on delay	0.00–320.00s	**81**	0.00	
P5.15	1424	✓	**rw**	RO1, off-delay	0.00–320.00s	**81**	0.00	
P5.16	1425	✓	**rw**	RO2, on delay	0.00–320.00s	**81**	0.00	
P5.17	1426	✓	**rw**	RO2, off-delay	0.00–320.00s	**81**	0.00	

Drives Control

PNU	ID	Access RUN	ro/rw	Designation	Value Range	Page	FS (P1.3)	User Setting
P6.1	125	✓	**rw**	Primary remote control source	**1** = Control signal terminals (I/O) **2** = Operating unit (KEYPAD) **3** = Fieldbus (BUS)	**82**	1	
P6.2	117	✓	**rw**	Primary remote speed reference	**0** = Fixed frequency (FF0) **1** = Operating unit (REF) **2** = Fieldbus (BUS) **3** = AI1 **4** = AI2 **5** = Motor potentiometer	**82**	3	
P6.3	101	X	**rw**	Minimum frequency	0.00–P6.4 Hz	**83**	0.00	
P6.4	102	X	**rw**	Maximum frequency	P6.3–320.00 Hz	**83**	60.00	
P6.5	103	X	**rw**	Primary acceleration time (acc1)	0.1–3000s	**83**	3.0	
P6.6	104	X	**rw**	Primary deceleration time (dec1)	0.1–3000s	**83**	3.0	
P6.7	505	X	**rw**	Start function	**0** = Ramp, acceleration **1** = Flying restart circuit	**84**	0	
P6.8	506	X	**rw**	Stop function	**0** = Free coasting **1** = Ramp, deceleration	**84**	0	
P6.9	500	X	**rw**	S ramp	0.00 = Linear 0.1–10.0s (S-shaped)	**84**	0.0	
P6.10	717	X	**rw**	REAF, Wait time before an automatic restart	0.10–10.00s	**85**	0.50	
P6.11	718	X	**rw**	REAF, Testing period over three automatic restarts	0.00–60.00s	**85**	30.00	
P6.12	719	X	**rw**	REAF, Start function with automatic restart	**0** = Ramp, acceleration **1** = Flying restart circuit **2** = According to P6.7	**85**	0	

Drives Control, continued

PNU	ID	Access RUN	ro/rw	Designation	Value Range	Page	FS (P1.3)	User Setting
P6.13	731	X	**rw**	REAF, automatic restart after an error message	**0** = Deactivated **1** = Activated	**85**	0	
P6.14	1600	X	**rw**	Stop on direction change via the arrow buttons (</>) of the keypad (KEYPAD)	**0** = Deactivated **1** = Activated	**85**	1	
P6.15	184	X	**rw**	Keypad frequency reference (REF)	–P6.4 – +P6.4 Hz	**86**	0.00	
P6.16	1474	X	**rw**	Stop button active	**0** = Deactivated (no) **1** = Activated (yes)	**86**	1	
P6.17	1427	X	**rw**	Secondary remote control source	**1** = Control signal terminals (I/0) **2** = Control unit (KEYPAD) **3** = Fieldbus (BUS)	**86**	3	
P6.18	1428	X	**rw**	Secondary remote speed reference	**0** = Fixed frequency (FF0) **1** = Operating unit (REF) **2** = Fieldbus (BUS) **3** = AI1 **4** = AI2 **5** = Motor potentiometer	**86**	2	
P6.19	502	X	**rw**	Secondary acceleration time (acc2)	0.1–3000s	**86**	10.0	
P6.20	503	X	**rw**	Secondary deceleration time (dec2)	0.1–3000s	**86**	10.0	
P6.21	526	X	**rw**	Acceleration transition frequency (acc1–acc2)	0.00–P6.4 Hz	**86**	0.00	
P6.22	1334	X	**rw**	Deceleration transition frequency (dec1–dec2)	0.00–P6.4 Hz	**86**	0.00	
P6.23	1429	X	**rw**	REV blocked	**0** = Deactivated **1** = Activated	**86**	0	
P6.24	509	X	**rw**	Skip frequency 1, lower value	0.00–P6.25	**87**	0.00	
P6.25	510	X	**rw**	Skip frequency 1, upper value	P6.24–P6.4 Hz	**87**	0.00	
P6.26	511	X	**rw**	Skip frequency 2, lower value	0.00–P6.27	**87**	0.00	
P6.27	731	X	**rw**	Skip frequency 2, upper value	P6.26–P6.4 Hz	**87**	0.00	
P6.28	513	X	**rw**	Skip frequency 3, lower value	0.00–P6.29	**87**	0.00	
P6.29	514	X	**rw**	Skip frequency 3, upper value	P6.28–P6.4 Hz	**87**	0.00	
P6.30	759	X	**rw**	Automatic REAF attempts	1–10	**87**	3	
P6.31	1481	X	**rw**	Manual mode, primary control source	**1** = Control signal terminals (I/0) **2** = Control unit (KEYPAD) **3** = Fieldbus (BUS)	**87**	1	
P6.32	1482	X	**rw**	Manual mode, primary speed reference	**0** = Fixed frequency (FF0) **1** = Operating unit (REF) **2** = Fieldbus (BUS) **3** = AI1 **4** = AI2 **5** = Motor potentiometer	**87**	3	
P6.33	1483	X	**rw**	Manual mode, KEYPAD lock	**0** = Deactivated **1** = Activated	**87**	1	

Motor

PNU	ID	Access RUN	ro/rw	Designation	Value Range	Page	FS (P1.3)	User Setting
P7.1	113	X	**rw**	Motor, rated operational current	0.2 x I_e–2 x I_e (see motor rating plate)	**89**	I_e	
P7.2	107	X	**rw**	Current limit	0.2 x I_e–2 x I_e	**89**	1.5 x I_e	
P7.3	112	X	**rw**	Motor, rated speed	300–20000 min^{-1} (see motor rating plate)	**89**	1720	
P7.4	120	X	**rw**	Motor, power factor (cos φ)	0.30–1.00 (see motor rating plate)	**89**	0.85	
P7.5	110	X	**rw**	Motor, rated operating voltage	180–500V (see motor rating plate)	**89**	①	
P7.6	111	X	**rw**	Motor, rated frequency	30–320 Hz (see motor rating plate)	**89**	60.00	

Protective Functions

PNU	ID	Access RUN	ro/rw	Designation	Value Range	Page	FS (P1.3)	User Setting
P8.1	700	X	**rw**	Analog minimum reference error (live-zero)	**0** = Deactivated **1** = Alarm **2** = Fault, stop according to P6.8	**90**	1	
P8.2	727	X	**rw**	Undervoltage error	Like P8.1	**90**	2	
P8.3	703	X	**rw**	Ground fault	Like P8.1	**90**	2	
P8.4	709	X	**rw**	Stall protection	Like P8.1	**91**	1	
P8.5	713	X	**rw**	Underload protection	Like P8.1	**91**	0	
P8.6	704	X	**rw**	Motor, temperature protection	Like P8.1	**91**	2	
P8.7	705	X	**rw**	Motor, ambient temperature	–20° to 100°C	**91**	40	
P8.8	706	X	**rw**	Motor, cooling factor at zero frequency	0.0–150%	**91**	40	
P8.9	707	X	**rw**	Motor, thermal time constant	1–200 min	**91**	45	
P8.10	1430	X	**rw**	Analog minimum reference error, reaction time	0.0–10.0s	**93**	0.5	
P8.11	1473	X	**—**	(Not used)	—	**—**	—	
P8.12	714	X	**rw**	Underload low torque limit	10.0–150%	**93**	60.0	
P8.13	715	X	**rw**	Underload, low torque limit at zero frequency	10.0–150%	**93**	10.0	
P8.14	733	X	**rw**	Fieldbus error	Like P8.1	**94**	2	
P8.15	734	X	**rw**	Fieldbus interface error	Like P8.1	**94**	2	

Note

① Factory settings dependent on specific drive selected.

PID Controller

PNU	ID	Access RUN	ro/rw	Designation	Value Range	Page	FS (P1.3)	User Setting
P9.1	163	✓	**rw**	PID controller	**0** = Deactivated **1** = Activated for drive control **2** = Activated for external application	**95**	0	
P9.2	118	✓	**rw**	PID controllers, P gain	0.0–1000.0%	**95**	100.0	
P9.3	119	✓	**rw**	PID controller, I reset time	0.00–320.00s	**95**	10.00	
P9.4	167	✓	**rw**	PID controller setpoint, keypad reference	0.0–100.0%	**95**	0.0	
P9.5	332	✓	**rw**	PID controller, setpoint source	**0** = Keypad unit (P9.4) **1** = Fieldbus **2** = AI1 **3** = AI2	**95**	0	
P9.6	334	✓	**rw**	PID controller, process variable (PV) source (Actual value or feedback)	**0** = Fieldbus **1** = AI1 **2** = AI2	**96**	2	
P9.7	336	✓	**rw**	PID controller, actual value limiting, minimum	0.0–100.0%	**96**	0.0	
P9.8	337	✓	**rw**	PID controller, actual value limiting, maximum	0.0–100.0%	**96**	100.0	
P9.9	340	✓	**rw**	PID controller, controller deviation	**0** = Not inverted **1** = Inverted	**96**	0	
P9.10	132	✓	**rw**	PID controller, D rate time	0.00–10.0s	**96**	0.00	
P9.11	1431	✓	**rw**	PID controller, output filter, delay time	0.00–10.0s	**96**	0.0	
P9.12	1016	✓	**rw**	Sleep mode, frequency	0.00–P6.4 Hz	**96**	0.00	
P9.13	1018	✓	**rw**	Sleep mode, wake up setpoint	0.0–100.0%	**96**	25.0	
P9.14	1017	✓	**rw**	Sleep mode, delay time	0–3600s	**96**	30	
P9.15	1433	✓	**rw**	Hysteresis, upper limit	0.0–100.0%	**97**	0.0	
P9.16	1434	✓	**rw**	Hysteresis, lower limit	0.0–100.0%	**97**	0.0	
P9.17	1435	✓	**rw**	PID controller, max. controller deviation	0.0–100.0%	**97**	3.0	
P9.18	1475	✓	**rw**	PID controller, reference value scaling	0.1–32.7	**97**	1.0	
P9.19	1476	✓	**rw**	PID controller, process value scaling	0.1–32.7	**97**	1.0	
P9.20	1478	✓	**rw**	PID controller, output signal limit	0.00–100.0%	**97**	100.0	

Fixed Frequencies

PNU	ID	Access RUN	ro/rw	Designation	Value Range	Page	FS (P1.3)	User Setting
P10.1	124	✓	**rw**	Fixed frequency FF0	0.00–P6.4 Hz	**101**	6.00	
P10.2	105	✓	**rw**	Fixed frequency FF1	0.00–P6.4 Hz	**101**	12.00	
P10.3	106	✓	**rw**	Fixed frequency FF2	0.00–P6.4 Hz	**101**	18.00	
P10.4	126	✓	**rw**	Fixed frequency FF3	0.00–P6.4 Hz	**101**	24.00	
P10.5	127	✓	**rw**	Fixed frequency FF4	0.00–P6.4 Hz	**101**	30.00	
P10.6	128	✓	**rw**	Fixed frequency FF5	0.00–P6.4 Hz	**101**	36.00	
P10.7	129	✓	**rw**	Fixed frequency FF6	0.00–P6.4 Hz	**101**	48.00	
P10.8	130	✓	**rw**	Fixed frequency FF7	0.00–P6.4 Hz	**101**	60.00	
P10.9	1436	✓	**rw**	PLC Sequence control, operating mode	**0** = Deactivated **1** = Program cycle, execute once **2** = Execute program cycle continuously **3** = Execute program cycle in steps **4** = Execute program cycle continuously in steps	**102**	0	
P10.10	1437	✓	**rw**	PLC Sequence control, program (FWD/REV)	0–255	**102**	0	
P10.11	1438	✓	**rw**	Set time for FF0	0–10000s	**103**	0	
P10.12	1439	✓	**rw**	Set time for FF1	0–10000s	**103**	0	
P10.13	1440	✓	**rw**	Set time for FF2	0–10000s	**103**	0	
P10.14	1441	✓	**rw**	Set time for FF3	0–10000s	**103**	0	
P10.15	1442	✓	**rw**	Set time for FF4	0–10000s	**103**	0	
P10.16	1443	✓	**rw**	Set time for FF5	0–10000s	**103**	0	
P10.17	1444	✓	**rw**	Set time for FF6	0–10000s	**103**	0	
P10.18	1445	✓	**rw**	Set time for FF7	0–10000s	**103**	0	

V/Hz-Characteristic Curve

PNU	ID	Access RUN	ro/rw	Designation	Value Range	Page	FS (P1.3)	User Setting
P11.1	108	X	**rw**	V/Hz characteristic curve	**0** = Linear **1** = Squared **2** = Configurable	**107**	0	
P11.2	602	X	**rw**	Cut-off frequency	30.00–320.00 Hz	**108**	60.00	
P11.3	603	X	**rw**	Output voltage	10.00–200.00% of the motor rated voltage (P6.5)	**108**	100.00	
P11.4	604	X	**rw**	V/Hz characteristic curve, mean frequency value	0.00–P11.2 Hz	**109**	60.00	
P11.5	605	X	**rw**	V/Hz characteristic curve, mean voltage value	0.00–P11.3%	**109**	100.00	
P11.6	606	X	**rw**	Output voltage at 0 Hz	0.00–40.00%	**109**	0.00	
P11.7	109	X	**rw**	Torque increase	**0** = Deactivated **1** = Enabled	**109**	0	
P11.8	600	X	**rw**	Control mode	**0** = Frequency control (V/Hz) **1** = Speed control with slip compensation	**109**	0	
P11.9	601	X	**rw**	Carrier frequency	1.5–16.0 kHz	**111**	6.0	
P11.10	522	X	**rw**	Sine-wave filter (constant carrier frequency)	**0** = Deactivated **1** = Enabled	**111**	0	

Braking

PNU	ID	Access RUN	ro/rw	Designation	Value Range	Page	FS (P1.3)	User Setting
P12.1	507	X	**rw**	DC braking, current	0.2 x I_e–2 x I_e	**112**	I_e	
P12.2	516	X	**rw**	DC braking, braking time at start	0.00–600.00s	**112**	0.00	
P12.3	515	X	**rw**	DC braking, start frequency	0.00–10.00 Hz	**113**	1.50	
P12.4	508	X	**rw**	DC braking, braking time at STOP	0.00–600.00s	**114**	0.00	
P12.5	504	X	**rw**	Brake chopper	(Only active and visible with braking transistor installed) **0** = Deactivated **1** = Automatic activation in operation (RUN) **2** = Automatic activation in operation (RUN) and upon stop (STOP)	**116**	0	
P12.6	1447	X	**rw**	Brake chopper, DC bus switching threshold	(Only active and visible with braking transistor installed) 0–870V	**116**	0	
P12.7	1448	X	**rw**	External brake, delay time opening	0.00–320.00s	**117**	0.20	
P12.8	1449	X	**rw**	External brake, frequency threshold opening	0.00–P6.4 Hz	**117**	1.50	
P12.9	1450	X	**rw**	External brake, frequency threshold closing	0.00–P6.4 Hz	**117**	1.00	
P12.10	1451	X	**rw**	External brake, frequency threshold REV closing	0.00–P6.4 Hz	**117**	1.50	
P12.11	1452	X	**rw**	External brake, current limit opening	0.00–P7.2 A	**117**	0.00	

Logic Function

PNU	ID	Access RUN	ro/rw	Designation	Value Range	Page	FS (P1.3)	User Setting
P13.1	1453	X	**rw**	LOG function, Selection input A	**0** = Deactivated **1** = READY **2** = RUN **3** = FAULT **4** = Error message (inverted) **5** = ALARM **6** = REV **7** = Output frequency = frequency setpoint **8** = Motor controller active **9** = Zero frequency **10** = Frequency monitoring 1 **11** = Frequency monitoring 2 **12** = PID monitoring **13** = Overtemperature signal **14** = Overcurrent control active **15** = Overvoltage control active **16** = PLC sequence control active **17** = PLC sequence control, single step completed **18** = PLC sequence control, program cycle completed **19** = PLC Sequence control, pause **20** = Counter, value 1 reached **21** = Counter, value 2 reached **22** = RUN message active **23** = Analog min. reference error **24** = LOG function fulfilled **25** = PID controller, actual value monitoring **26** = External brake actuated **27** = Current monitoring **28** = Fieldbus, remote output	**119**	0	
P13.2	1454	X	**rw**	LOG function, Selection input B	Like P13.1	**120**	0	
P13.3	1455	X	**rw**	LOG function, select operation	**0** = A AND B **1** = A OR B **2** = A XOR B	**120**	0	

Second Parameter Set

PNU	ID	Access RUN	ro/rw	Designation	Value Range	Page	FS (P1.3)	User Setting
P14.1	1347	X	**rw**	Motor rated current (2PS)	0.2 x I_e–2 x I_e (see motor rating plate)	**121**	I_e	
P14.2	1352	X	**rw**	Current limit (2PS)	0.2 x I_e–2 x I_e	**121**	1.5 x I_e	
P14.3	1350	X	**rw**	Motor rated speed (2PS)	300 … 20000 min^{-1} (see motor rating plate)	**121**	①	
P14.4	1351	X	**rw**	Motor power factor (cos φ) (2PS)	0.30–1.00 (see motor rating plate)	**121**	①	
P14.5	1348	X	**rw**	Motor rated operating voltage (2PS)	180–500V (see motor rating plate)	**121**	①	
P14.6	1349	X	**rw**	Motor nominal frequency (2PS)	30–320 Hz (see motor rating plate)	**121**	60.00	
P14.7	1343	X	**rw**	Minimum frequency (2PS)	0.00–P14.8 Hz	**121**	0.00	
P14.8	1344	X	**rw**	Maximum frequency (2PS)	P14.7–320.00 Hz	**121**	60.00	
P14.9	1345	X	**rw**	Acceleration time (2PS) (acc3)	0.1–3000s	**121**	3.0	
P14.10	1346	X	**rw**	Deceleration time (2PS) (dec3)	0.1–3000s	**121**	3.0	
P14.11	1355	X	**rw**	V/Hz characteristic curve (2PS)	**0** = Linear **1** = Squared **2** = Configurable	**122**	0	
P14.12	1354	X	**rw**	Torque increase (2PS)	**0** = Deactivated **1** = Activated	**122**	0	
P14.13	1353	X	**rw**	Motor temperature protection (2PS)	**0** = Deactivated **1** = Alarm **2** = Fault, stop according to P6.8	**122**	0	
P14.14	1469	X	**rw**	Motor ambient temperature (2PS)	–20° to 100°C	**122**	40	
P14.15	1470	X	**rw**	Motor cooling factor at zero frequency (2PS)	0.0–150%	**122**	40.0	
P14.16	1471	X	**rw**	Motor thermal time constant (2PS)	1–200 min	**122**	45	

Note

① Factory settings dependent on specific drive selected.

System Parameters

PNU	ID	Access RUN	ro/rw	Designation	Value Range	Page	FS (P1.3)	User Setting
Hard- and Software Information								
S1.1	833	X	**ro**	API SW ID	—	**125**	0	
S1.2	834	X	**ro**	API SW Version	—	**125**	0	
S1.3	835	X	**ro**	Power SW ID	—	**125**	0	
S1.4	836	X	**ro**	Power SW Version	—	**125**	0	
S1.5	837	X	**ro**	Application ID	—	**125**	0	
S1.6	838	X	**ro**	Application revision	—	**125**	0	
S1.7	839	X	**ro**	System load	%	**125**	0	
Communication								
S2.1 ①	808	X	**ro**	Communication status	In xx.yyy format **xx** = Number of error messages (0–64) **yyy** = number of correct messages (0–999)	**125**		
S2.2 ①	809	✓	**rw**	Fieldbus protocol	**0** = FB disabled **1** = Modbus RTU	**125**	0	
S2.3 ①	810	✓	**rw**	Slave address	1–255	**125**	1	
S2.4 ①	811	✓	**rw**	Baud rate	**0** = 300 **1** = 600 **2** = 1200 **3** = 2400 **4** = 4800 **5** = 9600 **6** = 19200 **7** = 38400 **8** = 57600	**125**	5	
S2.6	813	✓	**rw**	Parity type	**0** = None, no, see 2 stop bits **1** = Even, see 1 stop bit **2** = Odd, see 1 stop bit	**126**	0	
S2.7	814	✓	**rw**	Communication timeout	**0** = Not used **1** = 1s **2** = 2s …255 = up to 255s	**126**	0	
S2.8	815	✓	**rw**	Reset communication status	**0** = Not used **1** = Resets parameter S2.1	**126**	0	

Note

① These parameters are overwritten with the bus-specific parameters when a fieldbus connection (for example, CANopen) is used. The parameter values described in the manual of the fieldbus interface then apply.

System Parameters, continued

PNU	ID	Access RUN	ro/rw	Designation	Value Range	Page	FS (P1.3)	User Setting
Unit Counter								
S3.1	827	X	**ro**	MWh counter	MWh	**126**	—	
S3.2	828	X	**ro**	Operating days (d)	0–0000 days	**126**	—	
S3.3	829	X	**ro**	Operating hours (h)	0–24 h	**126**	—	
S3.4	840	X	**ro**	RUN counter, days	0–0000 days	**126**	—	
S3.5	841	X	**ro**	RUN counter, hours	0–24 h	**126**	—	
S3.6	842	X	**ro**	Fault/alarm counter	Trip counter: 0–0000	**126**	—	
User Set								
S4.1	830	✓	**rw**	Display contrast	0–15	**126**	7	
S4.2	831	X	**rw**	Restore factory defaults	**0** = Factory setting or changed value **1** = Restores factory settings for all parameters	**126**	0	
S4.3	832	✓	**ro**	Password	0000–9999	**126**	0000	

Parameters marked with "M" (Monitor) are values currently being measured, variables calculated from these measured values, or status values from control signals.

The M parameters cannot be edited (only display values).

Parameter Values Currently Being Measured

PNU	ID	Access RUN	ro/rw	Designation	Value Range	Page	FS (P1.3)	User Setting
Display Values								
M1.1	1	**ro**		Output frequency	Hz	**127**	0.00	
M1.2	25	**ro**		Frequency reference value	Hz	**127**	0.00	
M1.3	2	**ro**		Motor shaft speed	RPM (calculated value, RPM)	**127**	0	
M1.4	3	**ro**		Motor current	A	**127**	0.00	
M1.5	4	**ro**		Motor torque	% (calculated value)	**127**	0.0	
M1.6	5	**ro**		Motor power	% (calculated value)	**127**	0.0	
M1.7	6	**ro**		Motor voltage	V	**127**	0.0	
M1.8	7	**ro**		DC bus voltage	V	**127**	0.0	
M1.9	8	**ro**		Unit temperature	°F (°C)	**127**	0	
M1.10	9	**ro**		Motor temperature	% (calculated value)	**127**	0	
M1.11	13	**ro**		Analog input 1	%	**127**	0.0	
M1.12	14	**ro**		Analog input 2	%	**127**	0.0	
M1.13	26	**ro**		Analog output 1	%	**127**	0.0	
M1.14	15	**ro**		Digital input	DI1, DI2, DI3 status	**127**	0	
M1.15	16	**ro**		Digital input	DI4, DI5, DI6 status	**128**	0	
M1.16	17	**ro**		Digital output	RO1, RO2, DO status	**128**	1	
M1.17	20	**ro**		PID reference value	%	**128**	0.0	
M1.18	21	**ro**		PID feedback	%	**128**	0.0	
M1.19	22	**ro**		PID error value	%	**128**	0.0	
M1.20	23	**ro**		PID output	%	**128**	0.0	
M1.21	1480	**ro**		Counter, digital input	—	**128**	0	

Appendix B

Door Panel Keypad Adapter System—Mounting Instructions

Overview

The door keypad is used for remote control drivers. It is installed on the door of a cabinet. For the installation, you need the following parts. See the figure below.

Door Keypad Mounting Kit

Door Keypad Components

Item	Description
1	Door keypad base
2	Text panel, cool gray
3	Door cable with attached grounding cable
4	Door panel adapter
5	Screws (4 pcs)

Note: Make sure that you have received all necessary parts.

Mounting Procedure

Door Keypad Mounting Instructions

Step	Instructions
1	Make an opening in the cabinet door for the control keypad according the dimensions on **Page 183**. Make the holes in the cabinet door for the screws using the dimensions on **Page 183**.
2	Place the control keypad base (item 1) toward the opening so that the screw holes you made in the cabinet door meet the bushings on the backside of the base. See figures below.
3	Fix the base on the cabinet door by tightening the screws (item 5).

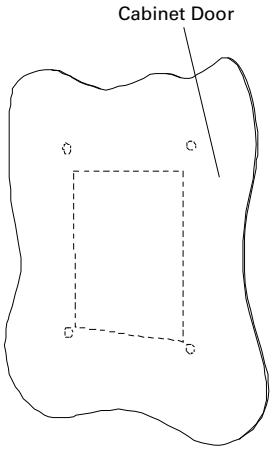

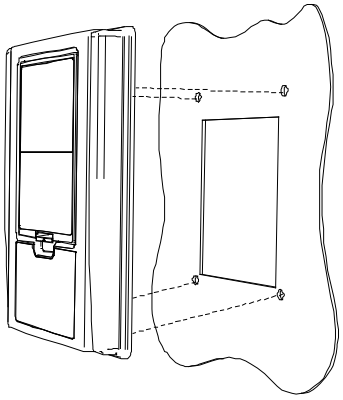

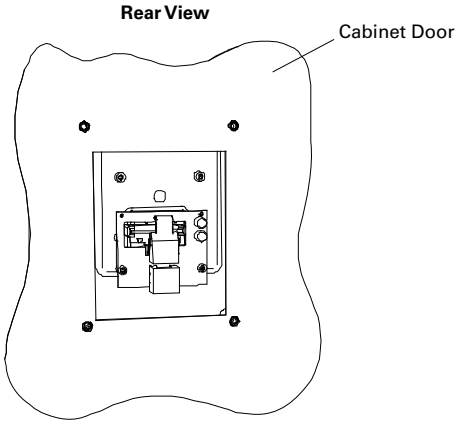

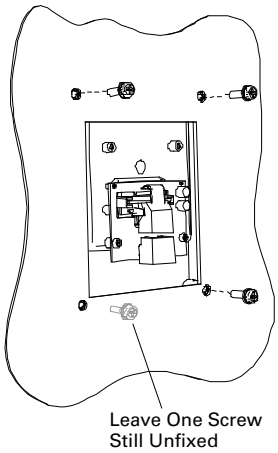

Door Keypad Mounting Instructions, continued

Step	Instructions	
4	Fix the grounding cable (item 3) against the backside of the cabinet door through one of the screw holes. **Note**: Make sure that a proper contact with the cabinet door is achieved. If necessary, remove the paint from the metal surface. Place the washers (attached to the screws) between the door and the screws. The tightening torque to be applied is 1.5 Nm. Connect the data cable (item 3) to the terminal of the keypad.	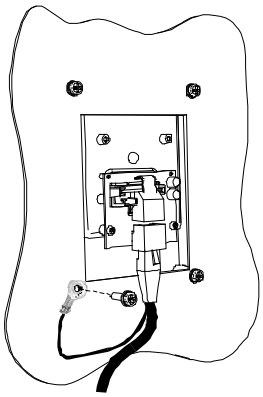
5	Assemble door panel adapter (item 4) to a cover and UART connector. After that, connect cable (item 3) to door panel adapter (item 4).	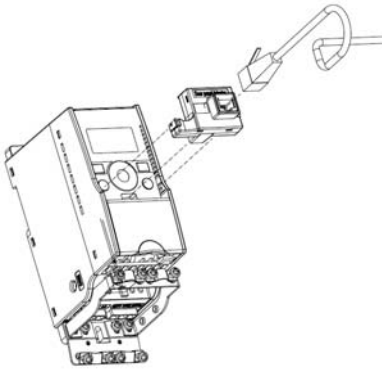
6	Assemble text panel (item 2) to door keypad base (item 1).	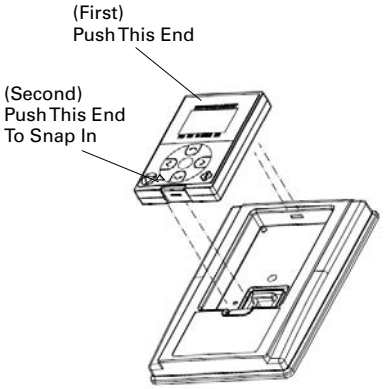

Dimensions

Approximate Dimensions in inches (mm)

The graphic is in real size. Use it to mark the cut-out for the door keypad and the holes for the screws.

Door Keypad Cut-out Dimensions

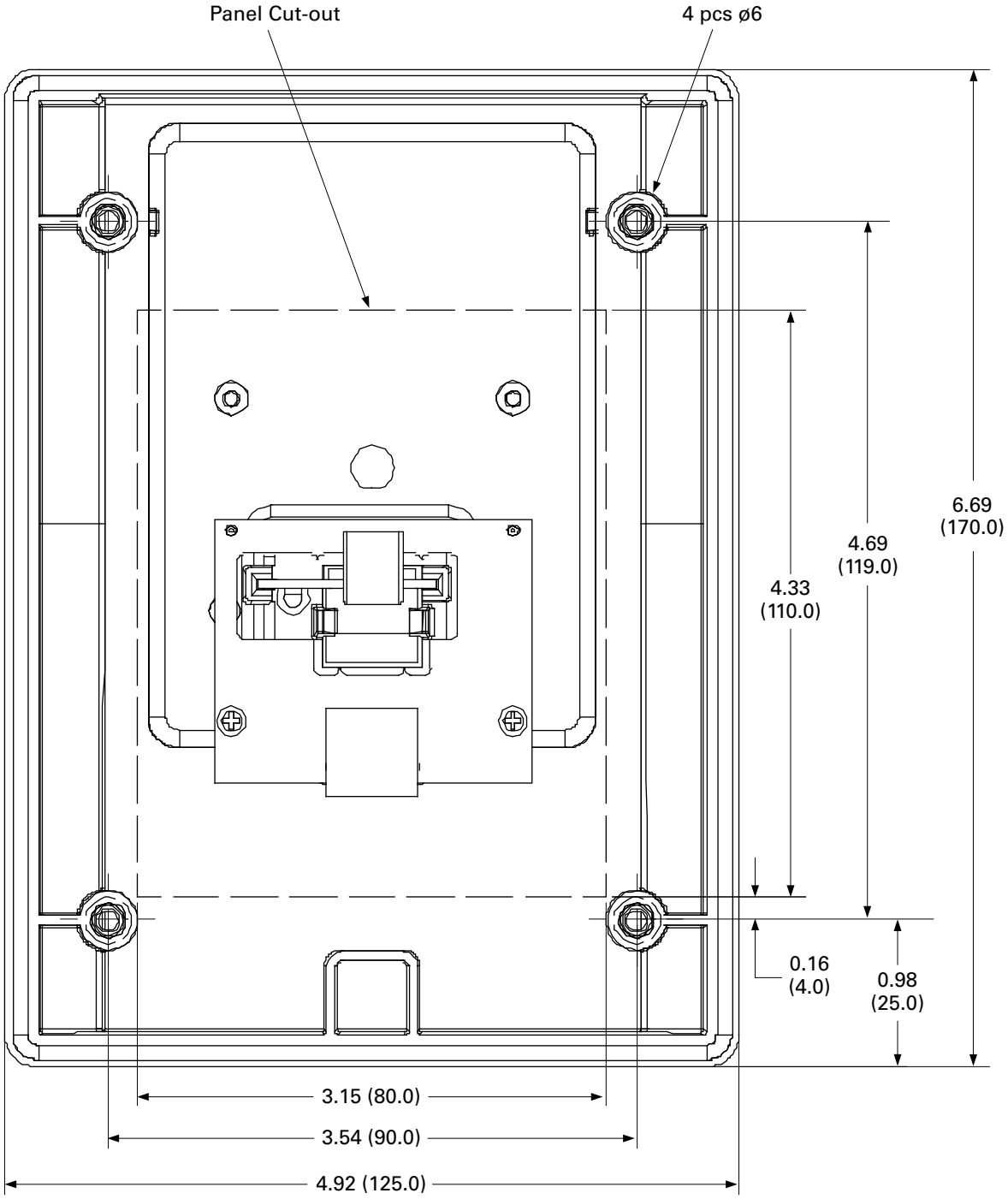

Approximate Dimensions in inches (mm)

Door Keypad Dimensions

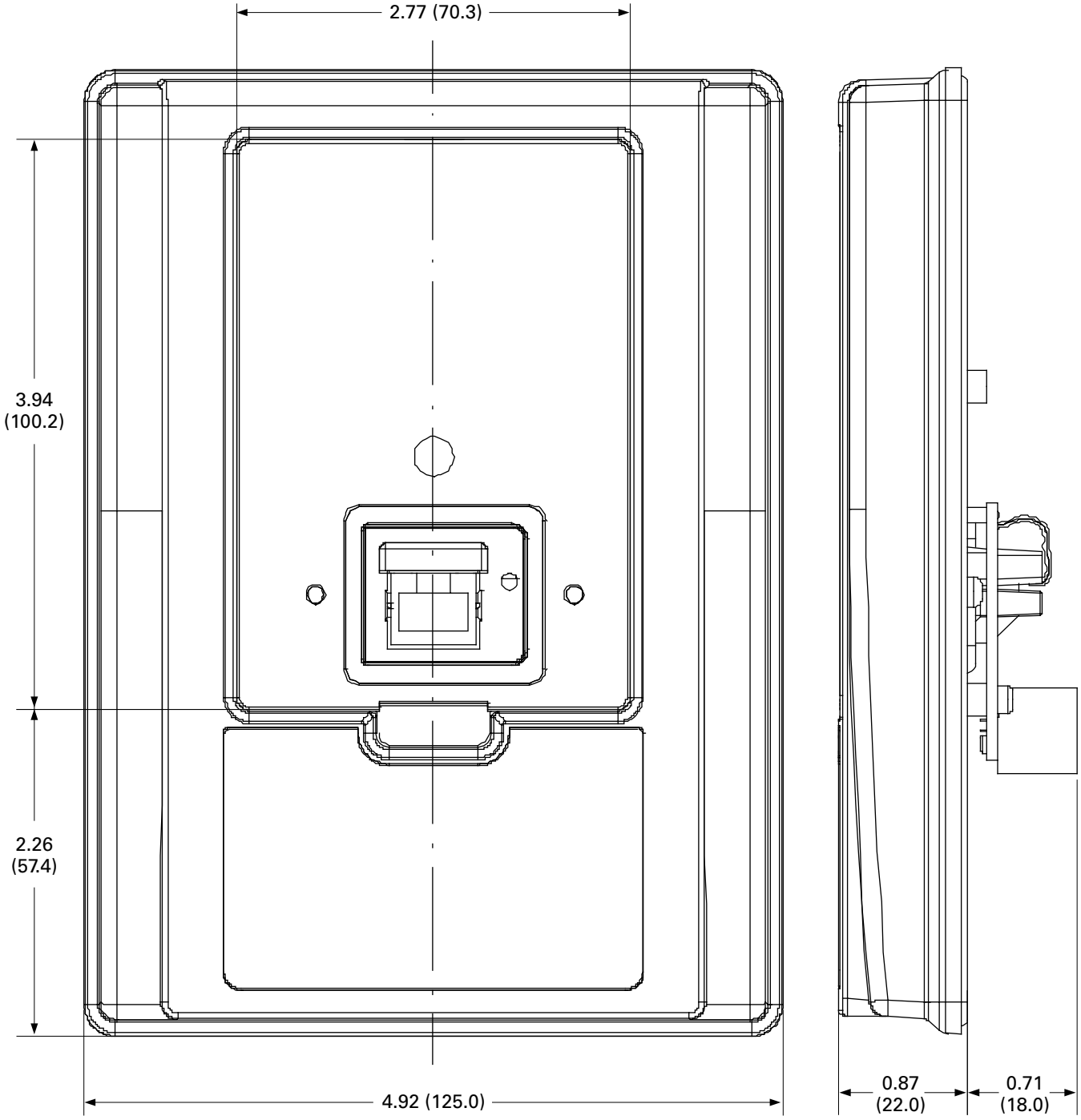

Front View **Side View**

Eaton is dedicated to ensuring that reliable, efficient and safe power is available when it's needed most. With unparalleled knowledge of electrical power management across industries, experts at Eaton deliver customized, integrated solutions to solve our customers' most critical challenges.

Our focus is on delivering the right solution for the application. But, decision makers demand more than just innovative products. They turn to Eaton for an unwavering commitment to personal support that makes customer success a top priority. For more information, **visit www.eaton.com/electrical.**

Eaton
1000 Eaton Boulevard
Cleveland, OH 44122
United States
Eaton.com

© 2013 Eaton
All Rights Reserved
Printed in USA
Publication No. MN04020003E / Z14306
October 2013

Eaton is a registered trademark.

All other trademarks are property of their respective owners.

Powering Business Worldwide

M-Max™ Series Adjustable Frequency Drive

User Manual

Effective October 2013
Supersedes February 2013

Powering Business Worldwide

Disclaimer of Warranties and Limitation of Liability

The information, recommendations, descriptions and safety notations in this document are based on Eaton Corporation's ("Eaton") experience and judgment and may not cover all contingencies. If further information is required, an Eaton sales office should be consulted. Sale of the product shown in this literature is subject to the terms and conditions outlined in appropriate Eaton selling policies or other contractual agreement between Eaton and the purchaser.

THERE ARE NO UNDERSTANDINGS, AGREEMENTS, WARRANTIES, EXPRESSED OR IMPLIED, INCLUDING WARRANTIES OF FITNESS FOR A PARTICULAR PURPOSE OR MERCHANTABILITY, OTHER THAN THOSE SPECIFICALLY SET OUT IN ANY EXISTING CONTRACT BETWEEN THE PARTIES. ANY SUCH CONTRACT STATES THE ENTIRE OBLIGATION OF EATON. THE CONTENTS OF THIS DOCUMENT SHALL NOT BECOME PART OF OR MODIFY ANY CONTRACT BETWEEN THE PARTIES.

In no event will Eaton be responsible to the purchaser or user in contract, in tort (including negligence), strict liability or other-wise for any special, indirect, incidental or consequential damage or loss whatsoever, including but not limited to damage or loss of use of equipment, plant or power system, cost of capital, loss of power, additional expenses in the use of existing power facilities, or claims against the purchaser or user by its customers resulting from the use of the information, recommendations and descriptions contained herein. The information contained in this manual is subject to change without notice.

Cover Photo: M-Max Series Drives

Support Services

The goal of Eaton is to ensure your greatest possible satisfaction with the operation of our products. We are dedicated to providing fast, friendly, and accurate assistance. That is why we offer you so many ways to get the support you need. Whether it's by phone, fax, or e-mail, you can access Eaton's support information 24 hours a day, seven days a week. Our wide range of services is listed below.

You should contact your local distributor for product pricing, availability, ordering, expediting, and repairs.

Web Site

Use the Eaton Web site to find product information. You can also find information on local distributors or Eaton's sales offices.

Web Site Address

www.eaton.com/electrical

EatonCare Customer Support Center

Call the EatonCare Support Center if you need assistance with placing an order, stock availability or proof of shipment, expediting an existing order, emergency shipments, product price information, returns other than warranty returns, and information on local distributors or sales offices.

Voice: 877-ETN-CARE (877-386-2273) (8:00 a.m.–6:00 p.m. Eastern Time U.S. [UTC –5])

FAX: 800-752-8602

After-Hours Emergency: 800-543-7038
(6:00 p.m.–8:00 a.m. Eastern Time U.S. [UTC –5])

If you are in the U.S. or Canada, and have OI or PLC questions, you can take advantage of our toll-free line for technical assistance with hardware and software product selection, system design and installation, and system debugging and diagnostics. Technical support engineers are available for calls during regular business hours.

Drives Technical Resource Center

Voice: 800-322-4986 or +1 828-651-0984 (8:00 a.m.–5:00 p.m. Central Time U.S. [UTC –6])
Fax: +1 920-262-6070
e-mail: TRCDrives@Eaton.com

For Customers in Europe, Contact:

Eaton Industries GmbH
Electrical Sector
After Sales Service
Hein-Moeller-Str. 7-11
D-53115 Bonn

Phone: +49 (0) 228 6 02-3640
Fax: +49 (0) 228 6 02-61400
Hotline: +49 (0) 180 5 223822

e-mail: AfterSalesEGBonn@Eaton.com
www.moeller.net/aftersales

Table of Contents

SAFETY

Before Commencing the Installation x
Definitions and Symbols xi
Hazardous High Voltage xi
Warnings and Cautions xi

ABOUT THIS MANUAL

Writing Conventions 1
Abbreviations and Symbols 1
Input Supply Voltages 2
Units 2

M-MAX SERIES OVERVIEW

Notes on the Second MMX Upgrade 3
Component Identification 4
Checking the Delivery 5
Nameplate Rating Data 6
Catalog Number Selection 7
Technical Data and Specifications 9
Description of the M-Max 13
Features 13
Selection Criteria 15
Proper Use 16
Maintenance and Inspection 16
Storage 17
Charging DC Link Capacitors 17
Service and Warranty 17

ENGINEERING

Introduction 18
Electrical Power Network 19
Safety and Switching 21
EMC Measures 22
Motor and Application 23

INSTALLATION

Introduction 26
Installation Instructions 26
EMC Installation 30
Electrical Installation 32

OPERATION

Commissioning Checklist 50
Operational Hazard Warnings 51
Commissioning with Control Signal Terminals (Factory Setting) 52

ERROR AND WARNING MESSAGES

Introduction 56

Table of Contents, continued

PARAMETERS
Control Unit 60
Parameter Menu (PAR) 64
Operational Data Indicator (MON) 127
Setpoint Input (REF) 129

SERIAL INTERFACE (MODBUS RTU)
General Information About Modbus 131
Communications in a Modbus Network 131
Modbus Parameters 132
Modbus Process Data 137

APPENDIX A
Special Technical Data 142
Dimensions and Frame Sizes 148
PC Interface Card 151
Mounting Frame for Fieldbus Connection 153
PROFIBUS DP Fieldbus Interface Card 157
Cables, Fuses and Disconnect Devices 158
List of Parameters 161

APPENDIX B
Door Panel Keypad Adapter System—Mounting Instructions 180

List of Figures

M-Max Frequency Converter 3
Control Signal Terminals and Microswitches 3
M-Max Series 4
Scope of Supply 5
Overview of the M-Max Device (FS1–FS3) 13
Overview of the M-Max Device (FS4 and FS5) 13
Block Diagram, Elements of M-Max Frequency Inverters 14
Selection Criteria 15
Drive System (PDS) 18
AC Power Networks with Grounded Center Point (TN-/TT Networks) 19
EMC Environment and Category 22
Parallel Connection of Several Motors to One Frequency Inverter 23
Example of a Motor Ratings Plate 24
Star and Delta Circuit Types 24
V/Hz-Characteristic Curve 24
Bypass Motor Control (Example) 25
Mounting Position (FS1–FS3) 26
Mounting Position (FS4 and FS5) 26
Air-Cooling Space 27
Minimum Clearance at the Front 27
Air-Baffle Due to Increased Circulation with Device Fan 27
Mounting Dimensions 28
Configuration for Mounting with Screws 28
Mounting Rail Conforming with IEC/EN 60715 29
Fastening to the Mounting Rail 29
Demounting 29
Mounting the Cable Routing Plate and the Brackets 29
EMC-Compliant Setup (Example: M-Max) 31
Three-Phase Input Connection 33
Connection to Power Section 33
Ground Connection 33
Connection in Power Section 34
Screened Connection Cable 35
Connection with Twisted Cable Shielding 35
Four-Core Shielded Motor Supply Cable 35
Position of Control Signal Terminals 38
Prevent the Shield from Becoming Unbraided 38
Example for a Single-Side Connection (PES) to the Frequency Inverter 38
Example for an Insulated End of the Control Cable 38
Control Signal Terminals Assignments and Designations 39
Microswitch Factory Settings 39
Control Signal Terminals (Digital and Analog Inputs/Outputs) 41
Analog Setpoint Inputs AI1 and AI2 41
Analog Setpoint Value Signal, for Example, from a Superordinate Controller (PLC) . . . 41
Analog Output AO (Connection Examples) 42

List of Figures, continued

Digital Inputs with Internal Supply Voltage 42
Digital Inputs with External Supply Voltage 42
Digital Inputs with Internal Supply Voltage (Negative Logic, Sink Type) 42
Digital Inputs with External Supply Voltage (Negative Logic, Sink Type) 43
Digital Output DO and Connection Examples 43
Connection Example and Operation of DO in Source and Sink Type 43
Relay Outputs with Connection Examples, Control Relay with Suppressor Circuit 44
Fixed Connection Cables at U >48V (Relay) 44
Connection Terminals of the Serial Interface and Microswitch S4 (Bus Terminating Resistor) 45
Two-Wire RS485 Connection 45
MMX11...N_ Block Diagram 46
MMX12...F_ Block Diagram 47
MMX32, MMX34 and MMX35 Block Diagram 48
Operational Data Indicator (Operational) 53
Operation (RUN) via Control Signal Terminal (I/O) with Left Rotating Field (REV) (for example, –12.34 Hz) 53
Start-Stop Command with Maximum Setpoint Value Voltage, Acceleration Ramp 3s 54
Brief Instructions: Steps to the Motor Start 55
Example of an Error Message (Undervoltage) 56
Example of an Alarm Message 56
View of the Keypad with LCD Display, Function Keys and Interface (LCD = Liquid Crystal Display) 60
LCD Display (Areas) 61
Operational Data Indicator (Operational) 61
Parameter Menu (P1.1 = 1, Quick Configuration) 64
Schematic Representation of Parameter Access 64
Analog Inputs AI1 and AI2 68
Example of Scaled Analog Input Signals 69
Example of Scaled Analog Input Signals with Offset 69
Filter Time Constant 70
Digital Inputs for Source and Sink Type 71
Control Logic Reaction to a Rising or Falling Edge (Source Type, Sink Type) 71
DI1 (FWD) + DI2 = REV 76
Example: Start Stop Impulse 76
Analog Output AO 77
Digital Outputs 78
Acceleration and Deceleration Time 83
S-Formed Curve for Acceleration and Deceleration Ramps 84
Automatic Restart After Error Message (Two Start Attempts) 85
Motor Parameters from Ratings Plate 88
Circuits (Delta, Star) 88
Motor Cooling Power 92
Calculation of Motor Temperature 92

List of Figures, continued

Function Chart for OD (PID System Deviation) 98
PID Controller, Actual Value Message FBV 99
Block Diagram, Ventilation with "Two-Stage Control" 99
Fixed Frequencies FF1, FF2 and FF3 (= FF1 + FF2) 100
Example: Activation of the Fixed Frequencies in the Factory Setting with Acceleration and Deceleration Ramps 100
Example A, Program Cycle Executed Once (P10.9 = 1, P10.10 = 0) 104
Example B, Program Cycle Executed Once (P10.9 = 1, P10.10 = 192) 105
Example C, Program Cycle Executed Once in Steps (P10.9 = 2, P10.10 = 0) 106
V/Hz-Characteristic Curve (P11.1) 108
Speed Behavior without Slip Compensation 110
Equivalent Circuit Diagram for an Asynchronous Motor 110
Speed Behavior with Slip Compensation 110
Regenerative Braking with External Braking Resistor 115
Mechanical Brake 117
Logic Linking of A and B 118
Roller Conveyor with Rotary Table 123
Stop Function with Two Different Deceleration Times 124
Operational Data Indicator 127
Modbus Network with M-Max 131
Data Exchange Between Master and Slave 133
Dimensions and Frame Sizes, FS1–FS3 (FS = Frame Size) 148
Dimensions and Frame Sizes, FS4 and FS5 (FS = Frame Size) 149
Equipment Supplied MMX-COM-PC 151
Fitting the MMX-COM-PC Connection Module 151
Removing the MMX-COM-PC Connection Module 151
Upload 152
Download 152
Inserting the 9V Block Battery 152
Power Supply 153
Parameter Software MaxConnect 153
MMX-NET-XA Mounting Frame 153
Removing the Interface Cover on the M-Max 153
Fitting and Connecting the Mounting Plate of the MMX-NET-XA 154
Cover of the MMX-NET-XA for Holding the Fieldbus Interface Card 154
Connecting the Interface Card with the Frequency Inverter 154
MMX-NET-XB Interface Module 155
Remove Cover (FS4, FS5) 155
Mounting Accessories for FS4, FS5 155
Plastic Bridge for Holding the Control Terminals 155
Connecting the MMX-NET-XB Interface Module with the Fieldbus Interface Cards 156
XMX-NET-PD-A PROFIBUS DP Fieldbus Interface Card with Nine-Pole Sub-D Plug Connection 157
Fieldbus Connection 157
XMX-NET-DN-A DeviceNet Fieldbus Interface Card 157
Door Keypad Mounting Kit 180
Door Keypad Cut-out Dimensions 183
Door Keypad Dimensions 184

List of Tables

Unit Conversion Examples 2
Nameplate Inscriptions 6
Type Designation of the M-Max Frequency Inverters 7
Examples 8
General Rated Operational Data 9
Power Connection Voltages 11
Maintenance Measures and Intervals 16
Identification on the Residual-Current Circuit-Breakers 21
Assignment of Frequency Inverters to Example Motor Circuit 24
Minimum Clearance and Required Cooling Air 27
Stripping Lengths in the Power Section in inches (mm) 34
Arrangement and Size of the Connection Terminals 36
Possible Connection Line Sizes and Specifications on Control Signal Terminals 39
Factory-Set Control Terminal Functions 40
List of Fault Messages (F) and Warning Messages (AL) 57
Error Messages via Operating Unit 59
Control Unit Elements 60
Areas of the LCD Display 61
Setting Parameters 62
Predefined Application Parameters from Parameter P1.2 66
Default I/O 67
Parameter Selections 67
Analog Inputs 68
Digital Inputs 72
Analog Outputs 77
Digital Outputs 78
Drives Control 82
Motor 89
Protective Functions 90
PID Controller 95
Fixed Frequency 100
Fixed Frequency Setpoint Value 101
Determining the Program Number (P10.10) 102
Fixed Frequency Setpoint Value 103
V/Hz-Characteristic Curve 107
Braking 112
Logic Function 119
Second Parameter Set 121
System Parameter 125
Operational Data Indicator 127
Status Displays Examples 128
Setpoint Input (REF) 129
Modbus Parameters in the M-Max 132
Error Code Description 135

List of Tables, continued

Device Series MMX11 142
Device Series MMX12 143
Device Series MMX32 144
Device Series MMX34 145
Device Series MMX35 147
Dimensions and Frame Sizes 150
Fuses and Maximum Cross-Sections 159
Specified Fuses and Disconnect Devices 160
Quick Start Parameter Guide 161
System Parameters in the Quick Start 162
Default I/O 163
Parameter Selection 164
Analog Input 164
Digital Input 165
Analog Output 166
Digital Output 167
Drives Control 168
Motor 170
Protective Functions 170
PID Controller 171
Fixed Frequencies 172
V/Hz-Characteristic Curve 173
Braking 174
Logic Function 175
Second Parameter Set 176
System Parameters 177
Parameter Values Currently Being Measured 179
Door Keypad Components 180
Door Keypad Mounting Instructions 181
Door Keypad Mounting Instructions, continued 182

Safety

Warning!
Dangerous Electrical Voltage!

Before Commencing the Installation

- Disconnect the power supply of the device
- Ensure that devices cannot be accidentally restarted
- Verify isolation from the supply
- Earth and short circuit the device
- Cover or enclose any adjacent live components
- Follow the engineering instructions (IL04020001E) for the device concerned
- Only suitably qualified personnel in accordance with EN 50110-1/-2 (VDE 0105 Part 100) may work on this device/system
- Before installation and before touching the device ensure that you are free of electrostatic charge
- The functional earth (FE, PES) must be connected to the protective earth (PE) or the potential equalization. The system installer is responsible for implementing this connection
- Connecting cables and signal lines should be installed so that inductive or capacitive interference does not impair the automation functions
- Install automation devices and related operating elements in such a way that they are well protected against unintentional operation
- Suitable safety hardware and software measures should be implemented for the I/O interface so that an open circuit on the signal side does not result in undefined states in the automation devices
- Ensure a reliable electrical isolation of the extra-low voltage of the 24V supply. Only use power supply units complying with IEC 60364-4-41 (VDE 0100 Part 410) or HD384.4.41 S2
- Deviations of the input voltage from the rated value must not exceed the tolerance limits given in the specifications, otherwise this may cause malfunction and dangerous operation
- Emergency stop devices complying with IEC/EN 60204-1 must be effective in all operating modes of the automation devices. Unlatching the emergency-stop devices must not cause a restart
- Devices that are designed for mounting in housings or control cabinets must only be operated and controlled after they have been installed and with the housing closed. Desktop or portable units must only be operated and controlled in enclosed housings
- Measures should be taken to ensure the proper restart of programs interrupted after a voltage dip or failure. This should not cause dangerous operating states even for a short time. If necessary, emergency-stop devices should be implemented
- Wherever faults in the automation system may cause injury or material damage, external measures must be implemented to ensure a safe operating state in the event of a fault or malfunction (for example, by means of separate limit switches, mechanical interlocks, and so on)
- Depending on their degree of protection, adjustable frequency drives may contain live bright metal parts, moving or rotating components, or hot surfaces during and immediately after operation
- Removal of the required covers, improper installation, or incorrect operation of motor or adjustable frequency drive may cause the failure of the device and may lead to serious injury or damage
- The applicable national accident prevention and safety regulations apply to all work carried out on live adjustable frequency drives
- The electrical installation must be carried out in accordance with the relevant regulations (for example, with regard to cable cross sections, fuses, PE)
- Transport, installation, commissioning, and maintenance work must be carried out only by qualified personnel (IEC 60364, HD 384 and national occupational safety regulations)
- Installations containing adjustable frequency drives must be provided with additional monitoring and protective devices in accordance with the applicable safety regulations. Modifications to the adjustable frequency drives using the operating software are permitted
- All covers and doors must be kept closed during operation
- To reduce hazards for people or equipment, the user must include in the machine design measures that restrict the consequences of a malfunction or failure of the drive (increased motor speed or sudden standstill of motor). These measures include:
  - Other independent devices for monitoring safety-related variables (speed, travel, end positions, and so on)
  - Electrical or non-electrical system-wide measures (electrical or mechanical interlocks)
  - Never touch live parts or cable connections of the adjustable frequency drive after it has been disconnected from the power supply. Due to the charge in the capacitors, these parts may still be live after disconnection. Fit appropriate warning signs

Definitions and Symbols

WARNING

This symbol indicates high voltage. It calls your attention to items or operations that could be dangerous to you and other persons operating this equipment. Read the message and follow the instructions carefully.

This symbol is the "Safety Alert Symbol." It occurs with either of two signal words: CAUTION or WARNING, as described below.

WARNING

Indicates a potentially hazardous situation which, if not avoided, can result in serious injury or death.

CAUTION

Indicates a potentially hazardous situation which, if not avoided, can result in minor to moderate injury, or serious damage to the product. The situation described in the CAUTION may, if not avoided, lead to serious results. Important safety measures are described in CAUTION (as well as WARNING).

Hazardous High Voltage

WARNING

Motor control equipment and electronic controllers are connected to hazardous line voltages. When servicing drives and electronic controllers, there may be exposed components with housings or protrusions at or above line potential. Extreme care should be taken to protect against shock.

Stand on an insulating pad and make it a habit to use only one hand when checking components. Always work with another person in case an emergency occurs. Disconnect power before checking controllers or performing maintenance. Be sure equipment is properly grounded. Wear safety glasses whenever working on electronic controllers or rotating machinery.

Warnings and Cautions

CAUTION

When selecting the cable cross-section, take the voltage drop under load conditions into account.

The consideration of other standards (for example, VDE 0113 or VDE 0289) is the responsibility of the user.

CAUTION

The specified minimum PE conductor cross-sections (EN 50178, VDE 0160) must be maintained.

WARNING

With frequency inverters, only AC/DC sensitive residual current circuit breakers (RCD type B) are to be used (EN 50178, IEC 755).

CAUTION

Debounced inputs may not be used in the safety circuit diagram.

Residual current circuit breakers (RCD) are only to be installed between the AC power supply network and the frequency inverter.

CAUTION

Debounced inputs may not be used in the safety circuit diagram.

If you are connecting multiple motors on one frequency inverter, you must design the contactors for the individual motors according to utilization category AC-3.

Selecting the motor contactor is done according to the rated operational current of the motor to be connected.

CAUTION

Debounced inputs may not be used in the safety circuit diagram.

A changeover between the frequency inverter and the input supply must take place in a voltage-free state.

WARNING

The frequency inverter outputs (U, V, W) must not be connected to the input voltage (destruction of the device, risk of fire).

CAUTION

Debounced inputs may not be used in the safety circuit diagram.

Switch S1 must switch only when frequency inverter T1 is at zero current.

WARNING

Carry out wiring work only after the frequency inverter has been correctly mounted and secured.

WARNING

Electric shock hazard—risk of injuries!

Carry out wiring work only if the unit is de-energized.

CAUTION

Debounced inputs may not be used in the safety circuit diagram.

Fire hazard!

Only use cables, protective switches, and contactors that feature the indicated permissible nominal current value.

CAUTION

Debounced inputs may not be used in the safety circuit diagram.

Ground contact currents in frequency inverters are greater than 3.5 mA (AC). According to product standard IEC/EN 61800-5-1, an additional equipment grounding conductor must be connected, or the cross-section of the equipment grounding conductor must be at least 0.39 in^2 (10 mm^2).

WARNING

The components in the frequency inverter's power section remain energized up to five (5) minutes after the supply voltage has been switched off (intermediate circuit capacitor discharging time).

Pay attention to hazard warnings!

DANGER
5 MIN

WARNING

Discharge yourself on a grounded surface before touching the control signal terminals and the controller PCB. This protects the device from destruction by electrostatic discharge.

WARNING

On the control signal and the connection terminals of the frequency inverter, no leakage resistance tests are to be performed with an insulation tester.

WARNING

Wait at least 5 minutes after switching the supply voltage off before you disconnect a connection on the connection terminals (L1, L2/N, L3, U/T1, V/T2, W/T3, R+, R–) of the frequency inverter.

WARNING

Commissioning is only to be completed by qualified technicians.

WARNING

Hazardous voltage!

The safety instructions on Page x must be followed.

WARNING

The components in the frequency inverter's power section are energized if the supply voltage (line voltage) is connected. For instance: power terminals L1, L2/N, L3, R+, R–, U/T1, V/T2, W/T3.

The control signal terminals are isolated from the line power potential.

There can be a dangerous voltage on the relay terminals (22 to 26) even if the frequency inverter is not being supplied with line voltage (for example, integration of relay contacts in control systems with 230 Vac).

WARNING

Following a shutdown (fault, line voltage off), the motor can start automatically (when the supply voltage is switched back on) if the automatic restart function has been enabled.

(See parameter "P6.13".)

CAUTION

Debounced inputs may not be used in the safety circuit diagram.

Any contactors and switching devices on the power side are not to be opened during motor operation. Inching operation using the power switch is not permitted.

Contactors and switching devices (repair and maintenance switches) on the motor side must never be opened while the motor is in operation when the frequency inverter is set to speed control operating mode (P11.8 = 1).

Inching operation of the motor with contactors and switching devices in the output of the frequency inverter is not permitted.

CAUTION

Debounced inputs may not be used in the safety circuit diagram.

Make sure that there is no danger in starting the motor. Disconnect the driven machine if there is a danger in an incorrect operational status.

WARNING

If a start signal is present, the drive is restarted automatically, if P3.1 = 0 is set (REAF = Restart after FAULT) and the error message has been acknowledged (Reset).

WARNING

If a start command is present at a digital input (DI1–DI6) assigned at P3.21, the sequence control also starts automatically (without switch edge) when the power supply is switched on (for example, after a power supply failure).

CAUTION

A high torque at low speed causes a high thermal load on the motor. If temperatures are too high, the motor should be equipped with an external fan.

CAUTION

A high torque at low speed leads to a high thermal load on the motor.

CAUTION

Debounced inputs may not be used in the safety circuit diagram. DC braking results in additional heating of the motor. Configure the brake torque, set via braking current (P12.1) and the braking duration (P12.2 and P12.4), as low as possible.

CAUTION

Debounced inputs may not be used in the safety circuit diagram.

The motor parameters must be identical in both parameter groups (P7 and P14).

CAUTION

Although the registers to be written are consecutive, the ID numbers of the parameter list are not. Only the ID numbers in the process data list are consecutive.

CAUTION

Fuses and cables selected must always comply with the applicable regulations at the installation site.

About this Manual

Writing Conventions

Symbols used in this manual have the following meanings:

In order to make it easier to follow the manual, the name of the current chapter is shown on the header of the left-hand page and the name of the current section in shown on the header of the right-hand page. This does not apply to pages at the start of a chapter or to empty pages at the end of a chapter.

In order to make it easier to understand some of the figures included in this manual, the housing of the frequency inverter, as well as other safety-relevant parts, have been left out. However, it is important to note that the frequency inverter must always be operated with its housing placed properly, as well as with all required safety-relevant parts.

Please follow the installation instructions in the AWA8230-2416 installation instructions document.

This manual was created in an electronic format. You can also order a hard copy version of it.

All the specifications in this manual refer to the hardware and software versions documented in it.

More information on the series described here can be found on the Internet under:

www.eaton.com\drives

Abbreviations and Symbols

The following symbols and abbreviations are used in this manual:

Abbreviation	Description
EMC	Electromagnetic compatibility
FS	Frame size
GND	Ground, 0V potential
IGBT	Insulated-gate bipolar transistor
PDS	Power Drives System
LCD	Liquid Crystal Display
PES	EMC connection to PE for shielded lines
PNU	Parameter number
UL®	Underwriters Laboratories

M-Max frequency converters are divided into four voltage categories:

- 100V (MMX11)
- 200V (MMX12_, MMX32_)
- 400V (MMX34_)
- 575V (MMX35_)

Input Supply Voltages

The rated operating voltages stated in the following table are based on the standard values for networks with a grounded star point.

In ring networks (as found in Europe) the rated voltage at the transfer point of the power supply companies is the same as the value in the consumer networks (for example, 230V, 400V).

In star networks (as found in North America), the rated voltage at the transfer point of the utility companies is higher than in the consumer network. Example: 120V → 115V, 240V → 230V, 480V → 460V.

The wide tolerance range of M-Max frequency inverters takes into account a permissible voltage drop of an additional 4% (U_{LN} –14%) in load networks, while, in the 400V category, it takes into account the North American line voltage of 480V +10% (60 Hz).

The permissible connection voltages for the M-Max series are listed in "Appendix A".

The rated operational data of the input voltage is always based on the input frequencies 50/60 Hz (50 Hz –10% to 60 Hz +10%).

Units

Every physical dimension included in this manual uses imperial units. For the purpose of the equipment's UL certification, some of these dimensions are accompanied by their equivalents in metric or Système International d'Unites (SI) units.

Unit Conversion Examples

Designation	US-American Value	SI Value	Conversion Value	US-American Designation
Length	1 in	25.4 mm	0.0394	inch
Power	1 hp = 1.014 PS	0.7457 kW	1.341	horsepower
Torque	1 lbf in	0.113 Nm	8.851	pound-force inches
Temperature	1°F (T_F)	–17.222°C (T_C)	$T_F = T_C$ x 9/5 + 32	Fahrenheit
Speed	1 RPM	1 min^{-1}	1	revolutions per minute
Weight	1 lb	0.4536 kg	2.205	pound

M-Max Series Overview

This manual provides a description of the M-Max series frequency inverters. It provides special information required for project planning, installation, and for the operation of the MMX frequency inverter. All information applies to the specified hardware and software versions.

Please read the manual thoroughly before you install and operate the frequency inverter.

We assume that you have a good knowledge of engineering fundamentals and that you are familiar with handling electrical systems and machines, as well as with reading technical drawings.

Notes on the Second MMX Upgrade

This second edition of the manual describes the extended functionality of the MMX. This applies to M-Max series frequency inverters from production date 12W10 ≧S/N 91275113, see nameplate.

Essential features of this upgrade:

- New control circuit board with a more powerful microprocessor
- Side mounted interface for fieldbus connections **[1]**
- Two additional control buttons **[2]**
- Extended functionality for digital and analog inputs and outputs **[3]**

M-Max Frequency Converter

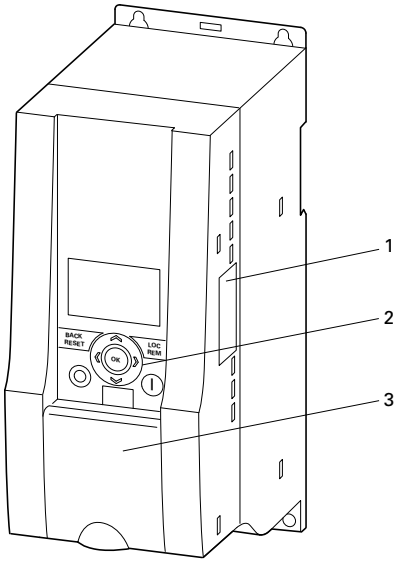

Control Signal Terminals and Microswitches

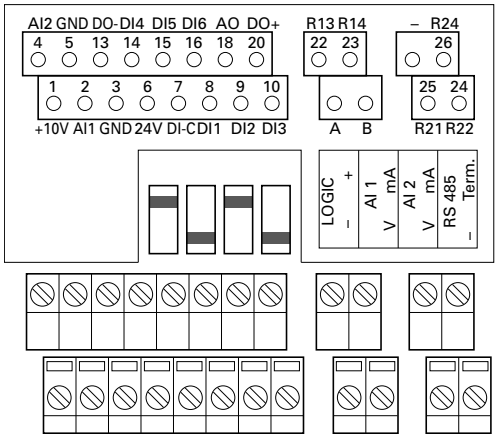

Component Identification

M-Max Series

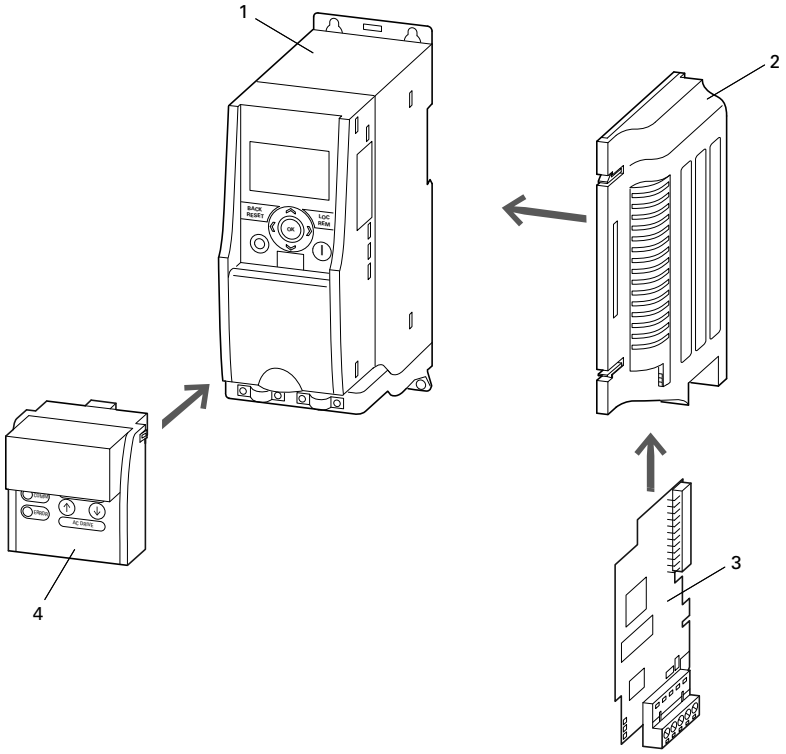

Item Number	Description
1	Frequency inverters MMX-_
2	Mounting frame (for fieldbus connection) MMX-NET-XA
3	Fieldbus connection: CANopen XMX-NET-CO-A PROFIBUS® DP with XMX-NET-PS-A screw terminals PROFIBUS DP with XMX-NET-PD-A Sub-Dm connector DeviceNet™ XMX-NET-DN-A
4	Communication module MMX-COM-PC
—	IP21 kit

Checking the Delivery

Before opening the packaging, go over the ratings plate on the packaging and check that the delivered frequency inverter is the same type as the one you ordered.

M-Max frequency converters have been carefully packaged and prepared for delivery. These devices should only be shipped in their original packaging with suitable transportation materials. Please take note of the labels and instructions on the packaging, as well as of those meant for the unpacked device.

Open the packaging with adequate tools and inspect the contents immediately after receipt in order to ensure that they are complete and undamaged.

Scope of Supply

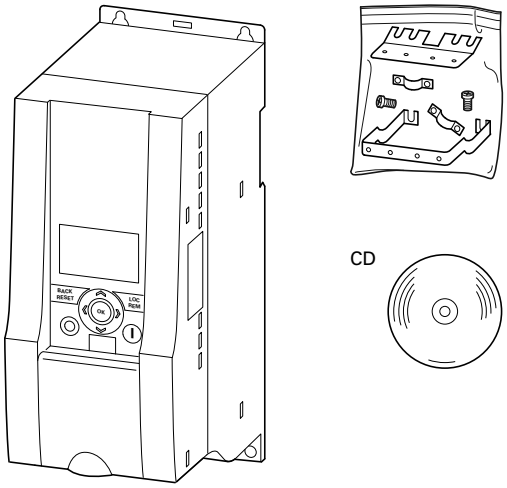

The packaging must contain the following parts:

- M-Max frequency inverter
- Accessory kit for EMC-suitable installation
- Installation instructions AWA8230-2416
- Data carrier (CD-ROM) with documentation for M-Max

Nameplate Rating Data

The device specific rating data of the M-Max is shown on the nameplate on the side of the device and on the rear of the control signal terminal cover.

The inscription of the nameplates has the following meaning (example):

Nameplate Inscriptions

Label	Meaning
MMX34AA3D3F0-0	Part number: **MMX** = M-Max series frequency inverter **3** = Three-phase power connection **4** = 400V voltage category **AA** = Instance (software version A and alphanumerical display) **3D3** = 3.3A rated operational current (3-decimal-3) **F** = Integrated radio interference suppression filter **0** = IP20 protection type **0** = No integrated optional assembly
Input	Power connection rating: Three-phase AC voltage (U_e 3~ AC), 380–480V voltage, 50/60 Hz frequency, input phase current (4.0A)
Output	Load side (motor) rating: Three-phase AC voltage (0 –U_e), output phase current (3.3A), output frequency (0–320 Hz)
Power	Assigned motor rating: 1.1 kW at 400V/1.5 hp at 460V for a four-pole internally-cooled or surface-cooled three-phase asynchronous motor (1500 min^{-1} at 50 Hz/1800 RPM at 60 Hz)
S/N	Serial number
	Frequency inverter is an electrical apparatus Read the manual (in this case AWB8230-1603) before making any electrical connections and commissioning
IP 20/Open type	Housing protection type: IP 20, UL (cUL®) open type
12W10	Manufacturing date: Week 12 of 2010

Catalog Number Selection

The type designation code and the part number of the M-Max series frequency inverter are in the following order:

Type Designation of the M-Max Frequency Inverters

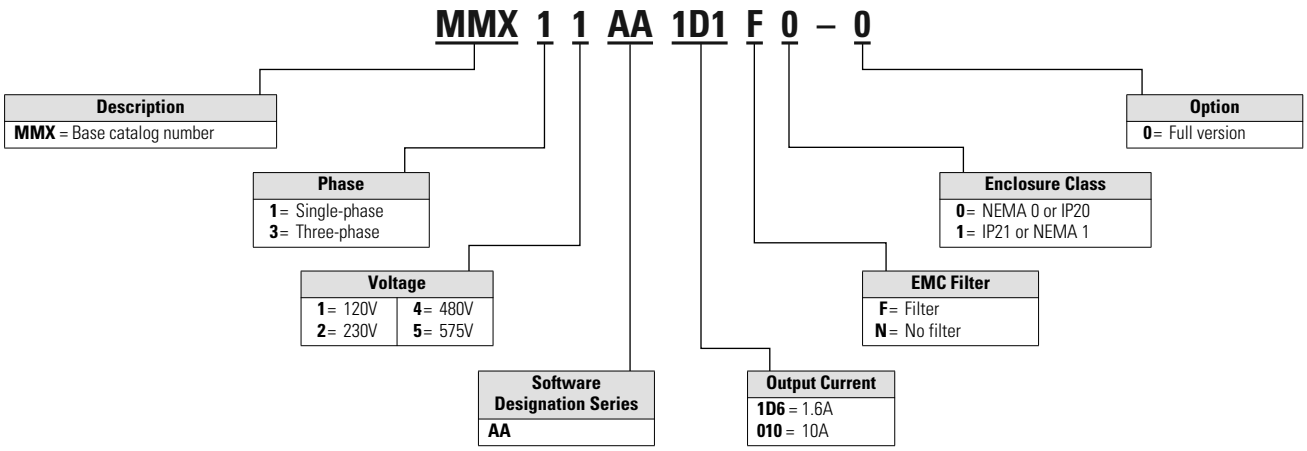

Examples

Label	Meaning
MMX11AA2D8N0-0	**MMX** = M-Max series frequency inverter: **1** = Single-phase power supply **1** = Rated voltage 115V **AA** = Type of software version and display unit **2D8** = 2.8A (rated operational current) **N** = No integrated interference suppression filter (no filter) **0** = IP20 protection type **–0** = No integrated optional assembly
MMX12AA1D7F0-0	**MMX** = M-Max series frequency inverter: **1** = Single-phase power supply **2** = Rated voltage 230V **AA** = Type of software version and display unit **1D7** = 1.7A (rated operational current) **F** = Integrated radio noise filter **0** = IP20 protection type **–0** = No integrated optional assembly
MMX32AA2D4N0-0	**MMX** = M-Max series frequency inverter: **3** = Three-phase input supply voltage **2** = Rated voltage 230V **AA** = Type of software version and display unit **2D4** = 2.4A (rated operational current) **N** = No integrated interference suppression filter (no filter) **0** = IP20 protection type **–0** = No integrated optional assembly
MMX34AA012F0-0	**MMX** = M-Max series frequency inverter: **3** = Three-phase input supply voltage **4** = Rated voltage 400V **AA** = Type of software version and display unit **012** = 12A (rated operational current) **F** = Integrated radio noise filter **0** = IP20 protection type **–0** = No integrated optional assembly
MMX34AA5D6N0-0	**MMX** = M-Max series frequency inverter: **3** = Three-phase input supply voltage **4** = Rated voltage 400V **AA** = Type of software version and display unit **5D6** = 5.6A (rated operational current) **N** = No integrated interference suppression filter (no filter) **0** = IP20 protection type **–0** = No integrated optional assembly

MMX11: The input voltage of 115V is raised to 230V (output voltage) through an internal voltage double connection.

Technical Data and Specifications

General Rated Operational Data

Description	Symbols ①	Unit	Specification
General			
Standards	—	—	EMC: IEC/EN 61800-3, Safety: IEC/EN61800-5, UL508C
Certifications and manufacturer's declarations on conformity	—	—	EMC: CE, CB, c-Tick Safety: CE, CB, UL, cUL
Production quality	—	—	RoHS, ISO® 9001
Climatic proofing	p_W	%	<95%, average relative humidity, noncondensing (EN50178)
Air quality			
Chemical vapors	—	—	IEC721-3-3: Device in operation, Class 3C2
Mechanical particles	—	—	IEC721-3-3: Device in operation, Class 3S2
Ambient temperature			
Operation	ϑ	°F (°C)	14° to 122° (–10° to 50°) ②
Storage	ϑ	°F (°C)	–40° to 158° (–40° to 70°)
Installation altitude	H	ft (m)	0–3281 ft (0–1000m) above sea level, over 3281 ft (1000m) with 1% power reduction per 328 ft (100m), maximum 6562 ft (2000m), at maximum 122°F (50°C) ambient temperature
Mounting position	—	—	Vertical ±90 for FS1–FS3 Vertical ±30 for FS4 and FS5
Protection type	—	—	IP20 for FS1–FS3 IP21/NEMA for FS4 and FS5
Busbar tag shroud	—	—	BGV A3 (VBG4, finger- and back-of-hand safe)
Mechanical shock resistance	—	—	IEC 68-2-27 Storage and transport: 15g, 11 ms (in the packaging) UPS drop test (for applicable UPS weights)
Vibration	—	—	EN 60068-2-6 3–150 Hz, oscillation amplitude 1 mm (peak) at 3–15.8 Hz, maximum acceleration amplitude 1g at 15.8–150 Hz
Emitted interference with internal EMC filter (maximum motor cable length)	—	—	C2: Class A in 1st environment (residential area with commercial utilization) C3: Class A in 2nd environment (industrial)
MMX…NO-O	—	—	No EMC filter
MMX…FO-O	—	—	C2 in first environment max. 3m motor cable length (FS1–FS3); 15m (FS4 and FS5) C3 in second environment max. 30m motor cable length (FS1–FS3); 50m (FS4 and FS5)

Notes

① Symbols used in technical data and formulas.

② 122°F (50°C) with lateral clearance of ≧0.79 in (20 mm) and reduced pulse frequency ≦4 kHz and altitude ≦1000m.

General Rated Operational Data, continued

Description	Symbols ①	Unit	Specification
Power Section			
Rated operational voltage	f_{LN}	Hz	at 50/60
MMX11	U_e	Vac	1~115 (110 –15% to 120 +10%)
MMX12	U_e	Vac	1~230 (208 –15% to 240 +10%)
MMX32	U_e	Vac	3~230 (208 –15% to 240 +10%)
MMX34	U_e	Vac	3~400 (380 –15% to 480 +10%)
MMX35	U_e	Vac	3~575 (–15% to +10%)
Input switch-on frequency	—	—	Maximum one time per minute
Input current	THD	%	>120
Short-circuit current	I_K	kA	Maximum <50
Input frequency	f_{LN}	Hz	50/60 (45–66 Hz ±0%)
Pulse frequency (switching frequency of the inverter)	f_{PWM}	kHz	1–16 (default = 6 kHz) ②
Operating mode	—	—	V/f characteristic curve control (FS), speed control with slip compensation
Output voltage	U_2	V	3 AC 230 (MMX11), 3 AC U_e (MMX12, MMX32, MMX34, MMX35)
Output frequency	f_2	Hz	0–320
Frequency resolution (setpoint value)	I	Hz	0.01
Rated operational current	I/I_e	%	100% continuous current at maximum 122°F (50°C) ambient temperature
Overload current	I/I_e	%	150 for 60s every 600s
Starting current	I/I_e	%	200 for 2s every 20s
Braking torque	M_B/M_N	%	≦30 for all sizes Up to maximum 100% M_N only as of size MMX34…4D3_ with external braking resistance
Control Section			
Control voltage (output)	U_c	Vdc	24, max. 50 mA
Reference voltage (output)	U_s	Vdc	10, max. 10 mA
Input, digital, parameter definable	—	—	6x, max. +30 Vdc, R_i >12k ohms
Permitted residual ripple with external control voltage (+24V)	—	—	Max. 5% $\triangle U_a/U_a$
Input, analog, parameterizable, selection via microswitches	—	—	2 x 0 (2) to +10 Vdc, R_i >200k ohms or 0 (4) to 20 mA, R_B ~200 ohms
Resolution	—	Bit	10
Output, digital, parameter definable	—	—	1 x transistor: 48 Vdc, max. 50 mA
Output relay, parameter definable	—	—	1 x N/O: 250 Vac, maximum 2A or 250 Vdc, max. 0.4A
Output relay, parameter definable	—	—	1 x changeover contact: 250 Vac, maximum 2A or 250 Vdc, maximum 0.4A
Serial interface	—	—	RS485/Modbus® RTU

Notes

① Symbols used in technical data and formulas.

② 122°F (50°C) with lateral clearance of ≧0.79 in (20 mm) and reduced pulse frequency ≦4 kHz and altitude ≦1000m.

Power Connection Voltages

Part Number	Rated Current I_e (A)	Overload Current (150%) I_{e150} (A)	Assigned Motor Rating P (230V, 50 Hz) (kW)	(A) ①	P (230V, 60 Hz) (hp)	(A) ①	Frame Size
1 AC 115V, 50/60 Hz (94–132V ±0%, 45–66 Hz ±0%)							
MMX11AA1D7_	1.7	2.6	0.25	1.4	1/4 ②	1.5 ②	FS2
MMX11AA2D4_	2.4	3.6	0.37	2	1/2	2.2	FS2
MMX11AA2D8_	2.8	4.2	0.55	2.7	3/4	2.2	FS2
MMX11AA3D7_	3.7	5.6	0.75	3.2	1	3.2	FS2
MMX11AA4D8_	4.8	7.2	1.1	4.6	1-1/2	4.2	FS3
1 AC 230V, 50/60 Hz (177–264V ±0%, 45–66 Hz ±0%)							
MMX12AA1D7_	1.7	2.6	0.25	1.4	1/4 ②	1.5 ②	FS1
MMX12AA2D4_	2.4	3.6	0.37	2	1/2	2.2	FS1
MMX12AA2D8_	2.8	4.2	0.55	2.7	3/4	2.2	FS1
MMX12AA3D7_	3.7	5.6	0.75	3.2	1	3.2	FS2
MMX12AA4D8_	4.8	7.2	1.1	4.6	1-1/2	4.2	FS2
MMX12AA7D0_	7	10.5	1.5	6.3	2	6.8	FS2
MMX12AA9D6_	9.6	14.4	2.2	8.7	3	9.6	FS3
3 AC 230V, 50/60 Hz (177–264V ±0%, 45–66 Hz ±0%)							
MMX32AA1D7_	1.7	2.6	0.25	1.4	1/4 ②	1.5 ②	FS1
MMX32AA2D4_	2.4	3.6	0.37	2	1/2	2.2	FS1
MMX32AA2D8_	2.8	4.2	0.55	2.7	3/4	2.2	FS1
MMX32AA3D7_	3.7	5.6	0.75	3.2	1	3.2	FS2
MMX32AA4D8_	4.8	7.2	1.1	4.6	1-1/2	4.2	FS2
MMX32AA7D0_	7	10.5	1.5	6.3	2	6.8	FS2
MMX32AA011_	11	14.4	2.2	8.7	3	9.6	FS3
MMX32AA017_	17	26.3	4	14.8	5	15.2	FS4
MMX32AA025_	25	37.5	5.5	19.6	7.5	22	FS4
MMX32AA031_	31	46.5	7.5	26.4	10	28	FS5
MMX32AA038_	38	57	11	38	15	28	FS5

Notes

The input voltage of 115V is raised to 230V (output voltage) through an internal voltage double connection.

① Rated motor currents for normal four-pole internally and surface-cooled three-phase asynchronous motors (1500 RPM at 50 Hz, 1800 RPM at 60 Hz).

② Calculated motor output (no standard value).

Power Connection Voltages, continued

Part Number	Rated Current I_e (A)	Overload Current (150%) I_{150} (A)	Assigned Motor Rating P (400V, 50 Hz) (kW)	(A) ①	P (460V, 60 Hz) (hp)	(A) ①	Frame Size
3 AC 400V, 50/60 Hz (323–528V ±0%, 45–66 Hz ±0%)							
MMX34AA1D3_	1.3	2	0.37	1.1	1/2	1.1	FS1
MMX34AA1D9_	1.9	2.9	0.55	1.5	3/4	1.6	FS1
MMX34AA2D4_	2.4	3.6	0.75	1.9	1	2.1	FS1
MMX34AA3D3_	3.3	5	1.1	2.6	1-1/2	3	FS2
MMX34AA4D3_	4.3	6.5	1.5	3.6	2	3.4	FS2
MMX34AA5D6_	5.6	8.4	2.2	5	3	4.8	FS2
MMX34AA7D6_	7.6	11.4	3	6.6	4 ②	6.4 ②	FS3
MMX34AA9D0_	9	13.5	4	8.5	5	7.6	FS3
MMX34AA012_	12	18	5.5	11.3	7-1/2	11	FS3
MMX34AA014_	14	21	7.5 ②	15.2 ③	10 ④	14	FS3
MMX34AA016_	16	24	7.5	15.2	10	14	FS4
MMX34AA023_	23	34.5	11	21.7	15	21	FS4
MMX34AA031_	31	46.5	15	29.3	20	27	FS5
MMX34AA038_	38	57	18.5	36	25	34	FS5
3 AC 575V, 50/60 Hz (489–632.5V ±0%, 45–66 Hz ±0%)							
MMX35AA1D7_	1.7	2.6	0.75	1.7	1	1.7	FS3
MMX35AA2D7_	2.7	4	1.5	2.7	2	2.7	FS3
MMX35AA3D9_	3.9	5.9	2.2	3.9	3	3.9	FS3
MMX35AA6D1_	6.1	9.2	4	6.1	5	6.1	FS3
MMX35AA9D0_	9.0	13.5	5.5	9.0	7.5	9.0	FS3

Notes

① Rated motor currents for normal four-pole internally-cooled and surface-cooled three-phase asynchronous motors (1500 min^{-1} at 50 Hz, 1800 min^{-1} at 60 Hz).

② Calculated motor output (no standard value).

③ Operation with reduced load torque (about –10% M_N).

④ Allocated motor output at a maximum ambient temperature of 104°F (40°C) and a maximum pulse frequency of 4 kHz.

Description of the M-Max

The following drawing shows an M-Max device.

Overview of the M-Max Device (FS1–FS3)

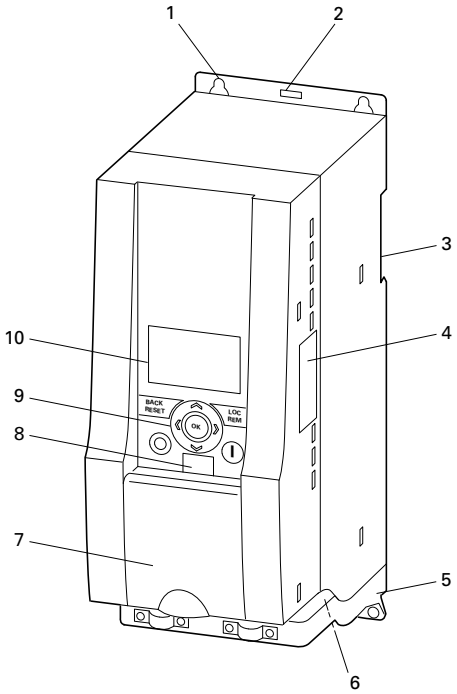

Item Number	Description
1	Mounting holes (screw fastening)
2	Release (removal from mounting rail)
3	Recess for mounting on mounting rail (DIN EN 50022-35)
4	Interface for fieldbus connection modules (option, MMX-NET-XA)
5	EMC installation accessories
6	Power section terminals
7	Cover flap of control signal terminals and microswitches
8	Interface for PC connection module MMX-COM-PC (option)
9	Keypad with 9 control buttons
10	Display unit (LCD)

Overview of the M-Max Device (FS4 and FS5)

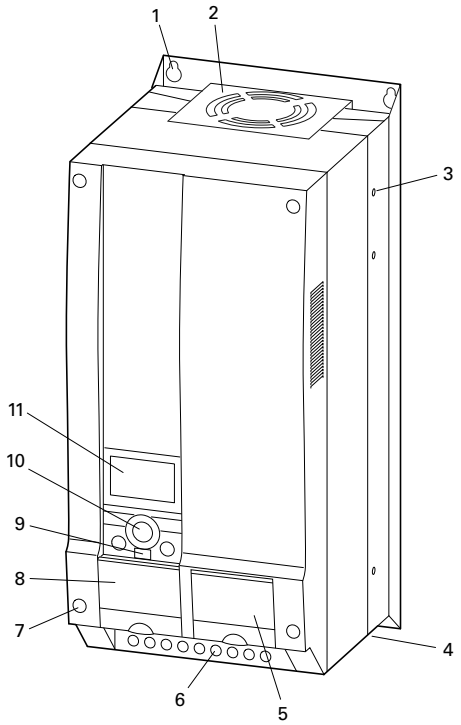

Item Number	Description
1	Fixing holes (screw fastening)
2	Device fans
3	Fixing holes for flange mounting (MMX-FLANGE…FS_ option required)
4	EMC mounting accessories
5	Cover flap for connecting the fieldbus interface cards
6	Power section terminals
7	Screws for opening the housing cover
8	Cover flap of control signal terminals and microswitches
9	Interface for PC connection module MMX-COM-PC (option)
10	Keypad with 9 control buttons
11	Display unit (LCD)

Features

The M-Max frequency inverter converts the voltage and frequency of an existing AC network into DC voltage. This DC voltage is used to generate a three-phase AC voltage with adjustable frequency and assigned amplitude values for the variable speed control of three-phase asynchronous motors.

Block Diagram, Elements of M-Max Frequency Inverters

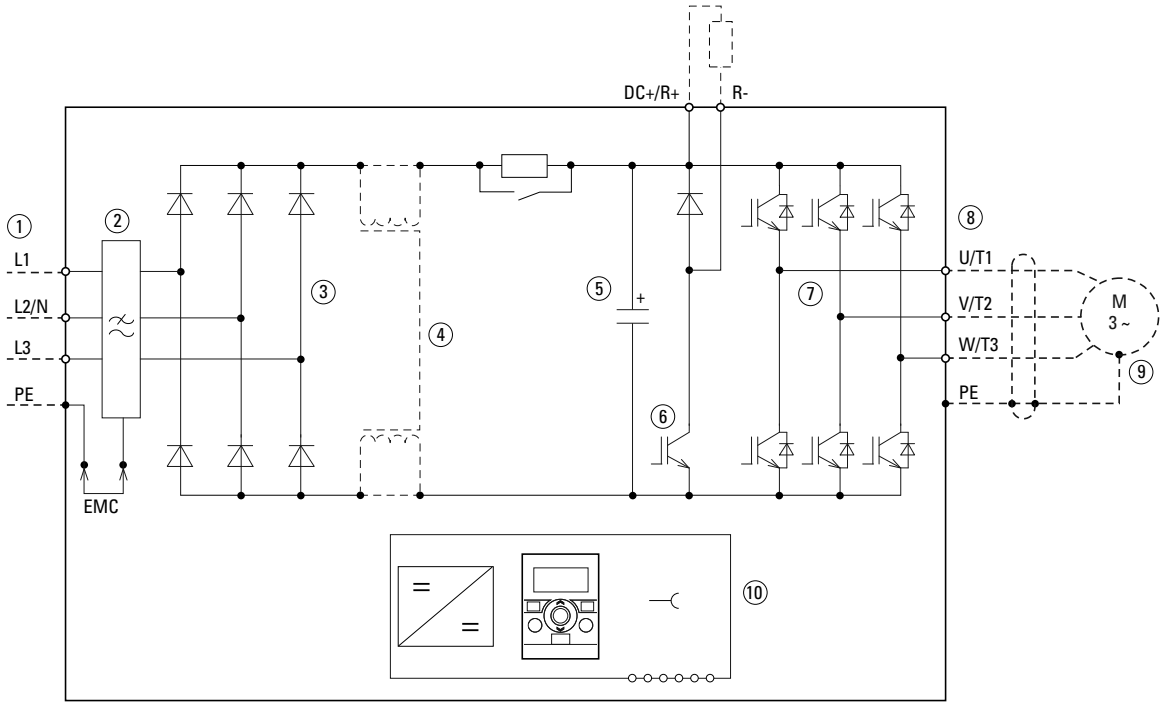

Item Number	Description
1	Supply L1, L2/N, L3, PE, mains supply voltage $U_{LN} = U_e$ at 50/60 Hz: MMX11: 100V class, single-phase mains connection (1 AC 120V), MMX12: 200V class, single-phase mains connection (1 AC 230V/240V), MMX32: 200V class, three-phase mains connection (3 AC 230V/240V), MMX34: 400V class, three-phase mains connection (3 AC 400V/480V). MMX35: 575V class, three-phase input connection (3 AC 575V)
2	Internal RFI filter (MMX…F_), category C2 and C3, in accordance with IEC/EN 61800-3 EMC connection of internal RFI filter with PE.
3	Rectifier bridge, single-phase (MMX1_) or three-phase (MMX3_), converts the AC voltage of the electrical network into DC voltage
4	DC choke, DC link choke (only for MMX32…F_ and MMX34…F_ in frame sizes FS4 and FS5)
5	DC link with charging resistor, capacitor and switching-mode power supply unit (SMPS = Switching-Mode Power Supply): DC link voltage U_{DC}: $U_{DC} = 1.41 \times U_{LN}$
6	Braking transistor: connections DC+/R+ and R- for external braking resistor (only for MMX32 and MMX34 from frame size FS2)
7	Inverter. The IGBT based inverter converts the DC voltage of the DC link (U_{DC}) into a three-phase AC voltage (U_2) with variable amplitude and frequency (f_2). Sinusoidal pulse width modulation (PWM) with V/f control can be switched to speed control with slip compensation
8	Motor connection U/T1, V/T2, W/T3 with output voltage U2 (0 to 100 % U_e) and output frequency f2 (0 to 320 Hz) output current (I_2): MMX11: 1.7 – 4.8A, MMX12: 1.7 – 9.6A, MMX32: 1.7 – 38A, MMX34: 1.3 – 38A, MMX35: 1.7 – 9.0A 100% at an ambient temperature of +50°C with an overload capacity of 150% for 60s every 600s and a starting current of 200% for 2s every 20s
9	Three-phase asynchronous motor, variable speed control of three-phase asynchronous motor for assigned motor shaft power values (P_2): MMX11: 0.25 – 1.1 kW (230V, 50 Hz) or 0.33 – 1 hp (230V, 60 Hz), MMX12: 0.25 – 2.2 kW (230V, 50 Hz) or 0.25 – 3 hp (230V, 60 Hz), MMX32: 0.25 – 11 kW (230V, 50 Hz) or 0.25 – 15 hp (230V, 60 Hz), MMX34: 0.37 – 18.5 kW (400V, 50 Hz) or 0.5 – 25 hp (460V, 60 Hz), MMX35: 1–7.5 hp (575V, 60 Hz)
10	Keypad with control buttons, LCD display, control voltage, control signal terminals, microswitches and interface for the PC interface card (Option)

Selection Criteria

The frequency inverter **[3]** is selected according to the supply voltage U_{LN} of the input supply **[1]** and the rated current of the assigned motor **[2]**. The circuit type (△/Y) of the motor must be selected according to the supply voltage **[1]**. The rated output current I_e of the frequency inverter must be greater than/equal to the rated motor current.

Selection Criteria

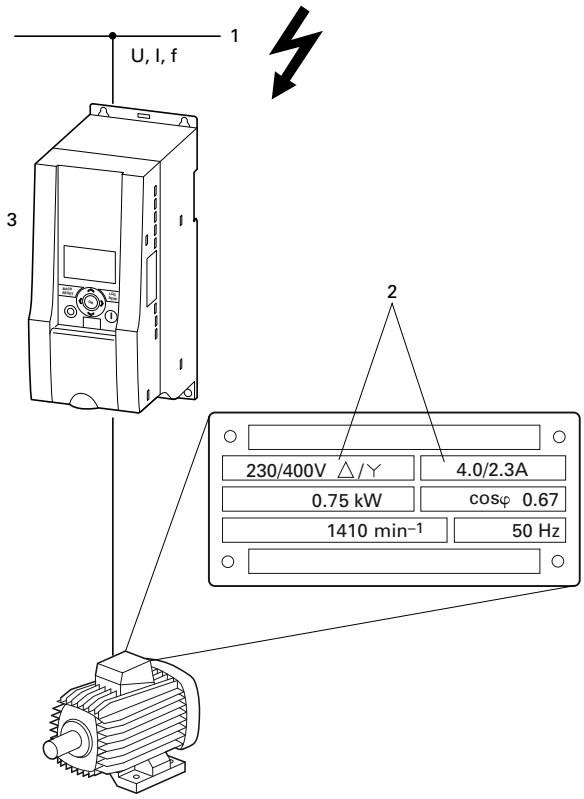

When selecting the drive, the following criteria must be known:

- Type of motor (three-phase asynchronous motor)
- Input voltage = rated operating voltage of the motor (for example, 3 AC~400V)
- Rated motor current (guide value, dependent on the circuit type and the supply voltage)
- Load torque (quadratic, constant)
- Starting torque
- Ambient temperature (rated value 122°F [50°C])

When connecting multiple motors in parallel to the output of a frequency inverter, the motor currents are added geometrically—separated by effective and idle current components. When you select a frequency inverter, make sure that it can supply the total resulting current. If necessary, for dampening and compensating the deviating current values, motor reactors or sinusoidal filters must be connected between the frequency inverter and the motor.

The parallel connection of multiple motors in the output of the frequency inverter is only permitted with V/Hz-characteristic curve control.

If you connect a motor to an operational frequency inverter, the motor draws a multiple of its rated operational current. When you select a frequency inverter, make sure that the starting current plus the sum of the currents of the running motors will not exceed the rated output current of the frequency inverter.

Switching in the output of the frequency inverter is only permitted with V/Hz-characteristic curve control.

The speed control with slip compensation (P11.8) increases the drive dynamics and optimizes the output. For this the frequency inverter processes all motor data in an electrical image.

The speed control operating mode (P11.8) must only be used with single drives (one motor at the output of the frequency inverter). The rated current of the motor must be assigned to the rated operational current of the frequency inverter (same rating).

Proper Use

The M-Max frequency inverters are not domestic appliances. They are designed only for industrial use as system components.

The M-Max frequency inverters are electrical apparatus for controlling variable speed drives with three-phase motors. They are designed for installation in machines or for use in combination with other components within a machine or system.

After installation in a machine, the frequency inverters must not be taken into operation until the associated machine has been confirmed to comply with the safety requirements of Machinery Safety Directive (MSD) 89/392/EEC (meets the requirements of EN 60204). The user of the equipment is responsible for ensuring that the machine use complies with the relevant EU Directives.

The CE markings on the M-MAX frequency inverter confirm that, when used in a typical drive configuration, the apparatus complies with the European Low Voltage Directive (LVD) and the EMC Directives (Directive 73/23/EEC, as amended by 93/68/EEC and Directive 89/336/EEC, as amended by 93/68/EEC).

In the described system configurations, M-Max frequency inverters are suitable for use in public and non-public networks.

A connection to IT networks (networks without reference to earth potential) is permissible only to a limited extent, because the device's built-in filter capacitors connect the network with the earth potential (enclosure). On earth free networks, this can lead to dangerous situations or damage to the device (isolation monitoring required).

To the output of the frequency inverter (terminals U, V, W) you must not:

- connect a voltage or capacitive loads (for example, phase compensation capacitors)
- connect multiple frequency inverters in parallel
- make a direct connection to the input (bypass)

Observe the technical data and connection requirements. For additional information, refer to the equipment nameplate or label at the frequency inverter, and the documentation.

Any other usage constitutes improper use.

Maintenance and Inspection

Provided that the general rating data (see "Nameplate Rating Data" on **Page 6**) and the special technical data (see "Special Technical Data" on **Page 142**) of the ratings concerned are observed, the M-Max frequency inverters are maintenance free. However, external influences may affect the function and the lifespan of the M-Max frequency inverter. We therefore recommend that the devices are checked regularly and the following maintenance measures are carried out at the specified intervals.

There are no plans for replacing or repairing individual components of M-Max frequency inverters.

If the M-Max frequency inverter is damaged by external influences, repair is not possible. Dispose of the device in accordance with the respectively applicable environmental laws and provisions for the disposal of electrical or electronic devices.

Maintenance Measures and Intervals

Maintenance Measure	Maintenance Interval
Clean cooling vents (cooling slits)	If required
Check the fan function	6–24 months (depending on the environment)
Filter in the switching cabinet doors (see manufacturer specifications)	6–24 months (depending on the environment)
Check the tightening torques of the terminals (control signal terminals, power terminals)	Regularly
Check connection terminals and all metallic surfaces for corrosion	6–24 months (depending on the environment)
Charge capacitors	12 months, see "Charging DC Link Capacitors" on **Page 17**

Storage

If the frequency inverter is stored before use, suitable ambient conditions must be ensured at the site of storage:

- Storage temperature: –40° to 158°F (–40° to 70°C)
- Relative average air humidity: <95%, non condensing (EN 50178)
- To prevent damage to the DC link capacitors, storage times longer than 12 months are not recommended (see "Charging DC Link Capacitors" below)

Charging DC Link Capacitors

After long storage times or long down times without a power supply (>12 months), the capacitors in the DC link must undergo controlled recharging, in order to avoid damage.

For this, the M-Max frequency inverters must be fed with a regulated DC power supply unit via two input connection terminals (for example, L1, L2/N). To avoid any possible excessive leakage currents from the capacitors, the inrush current should be limited to around 300 to 800 mA (depending on the rating). In this case, the frequency inverter must not be enabled (no start signal). The DC voltage must then be set to the values of the corresponding DC link voltage (U_{DC}) and fed for around two hours (regeneration time).

- MMX12, MMX32 about 324 Vdc (= 1.41 x U_{LN}) with single-phase line-to-line voltage (230V)
- MMX34 about 540 Vdc (= 1.35 x U_{LN}) with three-phase line-to-line voltage (400V)
- MMX35 (contact your local Eaton sales office for details)

MMX11: Due to the internal voltage doubler circuit, the capacitors cannot be recharged via the connection terminals. Contact your local Eaton distributor or sales office.

Service and Warranty

In the unlikely event that you have a problem with your M-Max frequency inverter, please contact Eaton Care Customer Support Center at 877-ETN-CARE (877-386-2273); option 2
option 6
option 3
or email: VFDaftermarketEG@eaton.com.

When you call, have the following information ready:

- the exact frequency inverter part no. (see nameplate)
- the date of purchase
- a detailed description of the problem that has occurred with the frequency inverter

If some of the information printed on the nameplate is not legible, please state only the information that is clearly legible. This information can also be found under the cover of the control terminals.

Information concerning the guarantee can be found in the Eaton General Terms and Conditions of Sale.

Engineering

Introduction

This chapter describes the most important features in the energy circuit of a drive system (PDS = Power Drive System) that you should take into consideration in your project planning.

Drive System (PDS)

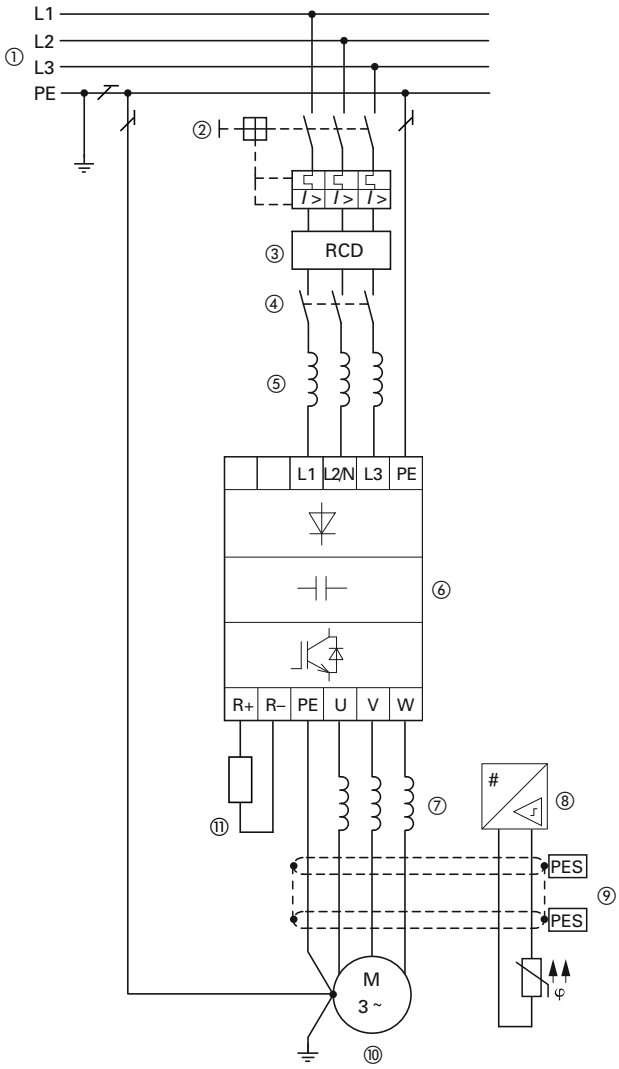

Item Number	Description
1	Network configuration, input voltage, input frequency, interaction with p.f. correction systems
2	Breakers, fuses, and cable cross-sections
3	Protection of persons and domestic animals with residual-current protective devices
4	Input contactor
5	Input line reactor, radio interference suppression filter, input filters
6	Frequency inverter: mounting, installation; power connection; EMC measures; circuit examples
7	Motor reactor, dv/dt filter, sine-wave filter
8	Motor protection; thermistor
9	Cable lengths, motor cables, shielding (EMC)
10	Motor and application, parallel operation of multiple motors on a frequency inverter, bypass circuit; DC braking
11	Braking resistance; dynamic braking

Electrical Power Network

Input Connection and Configuration

The M-Max series frequency inverters can be connected and operated with all control-point grounded AC power networks (see IEC 60364 for more information).

AC Power Networks with Grounded Center Point (TN-/TT Networks)

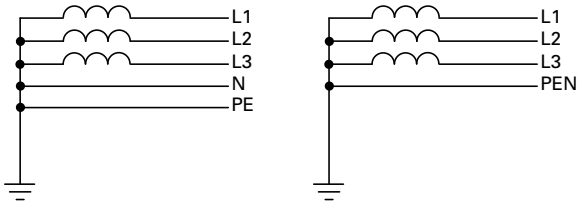

While planning the project, consider a symmetrical distribution to the three external conductors, if multiple frequency inverters with single-phase supplies are to be connected. The total current of all single-phase consumers is not to cause an overload of the neutral conductor (N-conductor).

The connection and operation of frequency inverters to asymmetrically grounded TN networks (phase-grounded Delta network "Grounded Delta", USA) or non-grounded or high-resistance grounded (over 30 ohms) IT networks is only conditionally permissible.

If the M-Max frequency inverters are connected to an asymmetrically grounded network or to an IT network (non-grounded, insulated), the internal interference suppression filter must be disconnected (unscrew the screw marked EMC, see "Electrical Installation" on **Page 32**). The required filtering for electromagnetic compatibility (EMC) is then no longer present.

Measures for electromagnetic compatibility are mandatory in a drive system in order to meet the legal requirements for EMC and low voltage regulations.

Good grounding measures are a prerequisite for the effective insert of further measures such as shielding or filters. Without respective grounding measures, further steps are superfluous.

Input Voltage and Frequency

The standardized input voltages (IEC 60038, VDE017-1) for energy suppliers (EVU) guarantee the following conditions at the transition points:

- Deviation from the rated value of voltage: maximum ±10%
- Deviation in voltage phase balance: maximum ±3%
- Deviation from rated value of the frequency: maximum ±4%

The broad tolerance band of the M-Max frequency inverter considers the rated value for
European as (EU: U_{LN} = 230V/400V, 50 Hz) and
American as (USA: U_{LN} = 240V/480V, 60 Hz) standard voltages:

- 120V, 50/60 Hz at MMX11
- 230V, 50 Hz (EU) and 240V, 60 Hz (USA) at MMX12 and MMX32
- 400V, 50 Hz (EU) and 480V, 60 Hz (USA) at MMX34_
- 575V, 50 Hz (EU) and 575V, 60 Hz (USA) at MMX35_

For the bottom voltage value, the permitted voltage drop of 4% in the consumer circuits is also taken into account.

- 100V device class (MMX11):
  110V –15% to 120V +10% (94V –0% to 132V +0%)
- 200V device class (MMX12, MMX32):
  208V –15% to 240V +10% (177V –0% to 264V +0%)
- 400V device class (MMX34):
  380V –15% to 480V +10% (323V –0% to 528V +0%)
- 575V device class (MMX35):
  575V –15% to 575V +10% (489V – 0% to 632.5V +0%)

The permitted frequency range is 50/60 Hz (45 Hz –0% –66 Hz +0%).

Voltage Balance

Because of the uneven loading on the conductor, and with the direct connection of greater power ratings, deviations from the ideal voltage form and asymmetrical voltages can be caused in three-phase AC power networks. These asymmetric divergences in the input voltage can lead to different loading of the diodes in input rectifiers with three-phase supplied frequency inverters, and as a result, an advance failure of this diode.

In the project planning for the connection of three-phase supplied frequency inverters (MMX32, MMX34, MMX35), consider only AC power networks that handle permitted asymmetric divergences in the input voltage ≦+3%.

If this condition is not fulfilled, or symmetry at the connection location is not known, the use of an assigned main choke is recommended.

Total Harmonic Distortion (THD)

The THD (Total Harmonic Distortion) is a measurement for the occurring harmonic distortion of the sinusoidal oscillation (input power side) input variables with the frequency inverter. It is given in percent of the total value.

$$K = \sqrt{\frac{U_2^2 + U_3^2 + U_4^2 + \ldots + U_n^2}{U_1^2 + U_2^2 + U_3^2 + U_4^2 + \ldots + U_n^2}} \bullet 100\%$$

U_1 = fundamental component
THD k = 0.1 → K = 10% ~ –20 dB (THD suppression)

$$THD = \frac{\sqrt{U_2^2 + U_3^2 + U_4^2 + \ldots + U_n^2}}{U_1}$$

With M-Max series frequency inverters, the permitted value for the total harmonic distortion THD is >120%.

Idle Power Compensation Devices

Compensation on the power supply side is not required for M-Max series frequency inverters. From the AC power supply network, they take on very little reactive power of the fundamental harmonics (cos φ ~ 0.98).

In the AC power networks with non-choked idle current compensation devices, current deviations can enable parallel resonance and undefinable circumstances.

In the project planning for the connection of frequency inverters to AC power networks with undefined circumstances, consider using main chokes.

Input Reactors

A input reactor (also called commutation inductor) increases the inductance of the power supply line. This extends the current flow period and dampens input deviations.

On frequency inverters, a input reactor limits the input feedback to permissible values. The harmonic current emissions that are fed back into the input network ("input feedback") are reduced. This reduces the input-side apparent current to about 30%.

Toward the frequency inverter, the input reactors dampen the interference from the supply network. This increases the withstand voltage of the frequency inverter and lengthens the lifespan (diodes of the input power rectifier, intermediate circuit capacitors).

For the operation of the M-Max frequency inverter, the application of main chokes is not necessary.

We do recommend, however, that an upstream main choke is used because the network quality is not known in most cases.

While planning the project, consider that a input reactor is only assigned to a single frequency inverter for isolation. Using a large input reactor for multiple small frequency inverters should therefore be avoided if at all possible.

When using an adapting transformer (assigned to a single frequency inverter), a main choke is not necessary.

Input reactors are designed based on the input current (I_{LN}) of the frequency inverter. Input chokes and the assignment to M-Max frequency inverters are explained in the appendix.

Safety and Switching

Fuses and Cable Cross-Sections

The fuses and wire cross-sections allocated for power-side connections depend on the rated input current I_{LN} of the frequency inverter (without input reactor).

CAUTION

When selecting the cable cross-section, take the voltage drop under load conditions into account.

The consideration of other standards (for example, VDE 0113 or VDE 0289) is the responsibility of the user.

The national and regional standards (for example VDE 0113, EN 60204) must be observed and the necessary approvals (for example UL) at the site of installation must be fulfilled.

When the device is operated in a UL-approved system, use only UL-approved breakers, fuses, fuse bases, and cables.

The leakage currents to ground (to EN 50178) are greater than 3.5 mA. The connection terminals marked PE and the housing must be connected with the ground circuit.

The leakage currents for the individual performance variables are listed on **Page 142**.

CAUTION

The specified minimum PE conductor cross-sections (EN 50178, VDE 0160) must be maintained.

Choose the cross-section of the PE conductor in the motor lines at least as large as the cross-section of the phase lines (U, V, W).

Cables and Fuses

The cross-sections of the cables and line protection fuses used must correspond with local standards.

For an installation in accordance with UL guidelines, the fuses and copper cable that are UL-approved and have a heat-resistance of 140° to 167°F (60° to 75°C) are to be used.

Use power cables with insulation according to the specified input voltages for the permanent installation. A shielded cable is not required on the input side.

A completely (360°) shielded low impedance cable is required on the motor side. The length of the motor cable depends on the RFI class and must not exceed 98 ft (30m) for the M-Max.

Residual-Current Device (RCD)

RCD (Residual Current Device): Residual current device, residual current circuit breaker (FI circuit breaker).

Residual current circuit breakers protect persons and animals from the existence (not the origination) of impermissibly high contact voltages. They prevent dangerous, and in some cases deadly injuries caused by electrical accidents, and also serve as fire prevention.

WARNING

With frequency inverters, only AC/DC sensitive residual current circuit breakers (RCD type B) are to be used (EN 50178, IEC 755).

Identification on the Residual-Current Circuit-Breakers

AC/DC sensitive (RCD, type B)		

Frequency inverters work internally with rectified AC currents. If an error occurs, the DC currents can block a type A RCD circuit breaker from triggering and therefore disable the protective functionality.

CAUTION

Debounced inputs may not be used in the safety circuit diagram.

Residual current circuit breakers (RCD) are only to be installed between the AC power supply network and the frequency inverter.

Safety-relevant leakage currents can occur while handling and when operating the frequency inverter, if the frequency inverter is not grounded (because of a fault).

Leakage currents to ground are mainly caused by foreign capacities with frequency inverters; between the motor phases and the shielding of the motor cable and via the Y-capacitors of the noise filter. The size of the leakage current is mainly dependent upon the:

- length of the motor cable
- shielding of the motor cable
- height of the pulse frequency (switching frequency of the inverter)
- design of the noise filter
- grounding measures at the site of the motor

The leakage current to ground is greater than 3.5 mA with a frequency inverter. Based on the requirements of EN 50178, an increased ground (PE) has to be connected. The cable cross-section must be at least 10 mm^2 or consist of two separately connected ground cables.

Residual current circuit breakers must be suitable for:

- the protection of installations with DC current component in case of fault scenario (RCD type B)
- high leakage currents (300 mA)
- brief discharges of pulse current spikes

Input Contactor

The input contactor enables an operational switching on and off of the supply voltage for the frequency inverter, and switching off in case of a fault.

The input contactor is designed based on the input current (I_{LN}) of the frequency inverter and the utilization category AC-1 (IEC 60947). Input contactors and the assignment to M-Max frequency inverters are explained in the appendix.

While planning the project, make sure that inching operation is not done via the input contactor of the frequency inverter on frequency-controlled drives, but through a controller input of the frequency inverter.

The maximum permitted operating frequency of the input voltage with the M-Max frequency inverter is one time per minute (normal operation).

EMC Measures

Electrical components in a system (machine) have a reciprocal effect on each other. Each device not only emits interference but is also affected by it. The interference can be produced by galvanic, capacitive, and/or inductive sources, or by electromagnetic radiation. In practice, the limit between line-conducted interference and emitted interference is around 30 MHz. Above 30 MHz, cables and conductors act like antennas that radiate electromagnetic waves.

Electromagnetic compatibility (EMC) for frequency controlled drives (variable speed drives) is implemented in accordance with product standard IEC/EN 61800-3. This includes the complete power drive system (PDS), from the input supply to the motor, including all components, as well as cables (see figure on **Page 18**). This type of drive system can consist of several individual drives.

The generic standards of the individual components in a PDS compliant with IEC/EN 61800-3 do not apply. These component manufacturers, however, must offer solutions that ensure standards-compliant use.

In Europe, maintaining the EMC guidelines is mandatory.

A declaration of conformity (CE) always refers to a "typical" power drive system (PDS). The responsibility to comply with the legally stipulated limit values and thus the provision of electromagnetic compatibility is ultimately the responsibility of the end user or system operator. This operator must also take measures to minimize or remove emission in the environment concerned (see figure below). He must also use means to increase the interference immunity of the devices of the system.

With their high interference immunity up to category C3, M-Max frequency inverters are ideal for use in harsh industrial networks (2nd environment).

With line-conducted emission, type MMX…-F_ frequency inverters (with integrated interference suppression filter) ensure the observance of the sensitive limit values of category C2 in environment 1. This requires an EMC-compliant installation (see **Page 32**) and the observance of the permissible motor cable lengths and maximum switching frequency (f_{PWM}) of the inverter.

Type MMX…-N_ frequency inverters can comply with the limit values of category C1 in environment 1 when used in conjunction with an assigned external interference suppression filter.

The required EMC measures should be taken into account in the engineering phase. Improvements and modifications during mounting and installation or even at the installation site involve additional and even considerably higher costs.

EMC Environment and Category

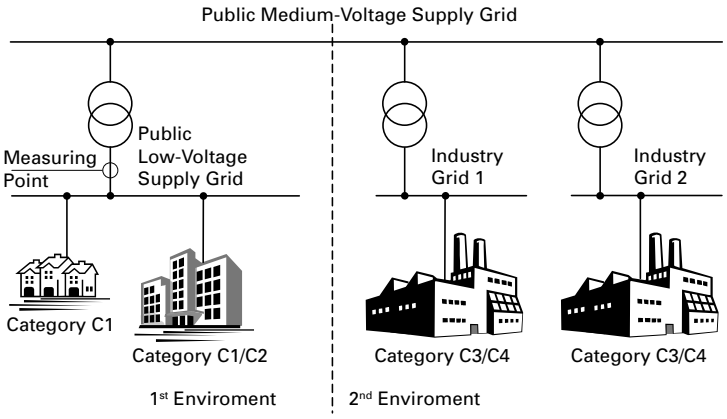

Motor and Application

Motor Selection

General recommendations for motor selection:

- Use three-phase powered asynchronous motors with short-circuit rotors and surface cooling, also called asynchronous motors or standard motors for the frequency-controlled drive system (PDS). Other specifications such as external rotor motors, slip-ring motors, reluctance motors, synchronous or servo motors can also be run with a frequency inverter, but normally require additional planning and discussion with the motor manufacturer
- Use only motors with at least heat class F (311°F [155°C] maximum steady state temperature)
- Four-pole motors are preferred (synchronous speed: 1500 min^{-1} at 50 Hz or 1800 min^{-1} at 60 Hz)
- Take the operating conditions into account for S1 operation (IEC 60034-1)
- When operating multiple motors in parallel on one frequency inverter, the motor output should not be more than three power classes apart
- Ensure that the motor is not overdimensioned. If a motor in speed control mode is underdimensioned, the motor rating must only be one rating level lower

Connecting Motors in Parallel

The M-Max frequency inverters allow parallel operation of several motors in V/Hz control mode:

- V/Hz control: several motors with the same or different rated operational data. The sum of all motor currents must be less than the frequency inverter's rated operational current
- V/Hz control: parallel control of several motors. The sum of the motor currents plus the motors' inrush currents must be less than the frequency inverter's rated operational current

Parallel operation at different motor speeds can be implemented only by changing the number of pole pairs and/or changing the motor's transmission ratio.

CAUTION

Debounced inputs may not be used in the safety circuit diagram.

If you are connecting multiple motors on one frequency inverter, you must design the contactors for the individual motors according to utilization category AC-3.

Selecting the motor contactor is done according to the rated operational current of the motor to be connected.

Parallel Connection of Several Motors to One Frequency Inverter

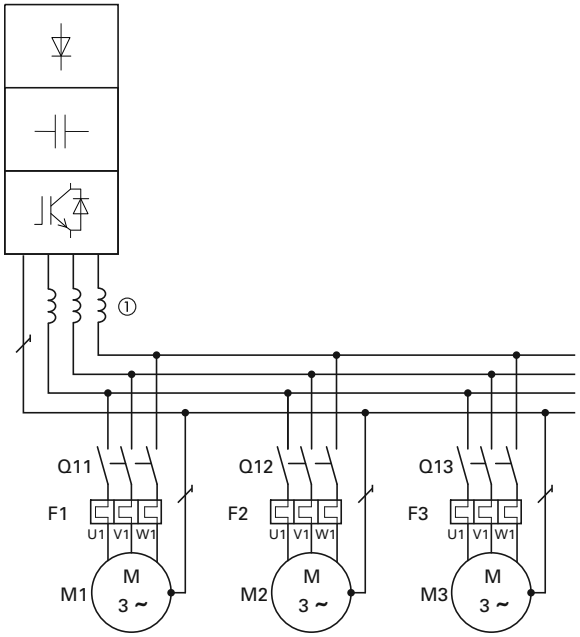

Connecting motors in parallel reduces the load resistance at the frequency inverter output. The total stator inductance is lower and the leakage capacity of the lines greater. As a result, the current distortion is greater than in a single-motor circuit. To reduce the current distortion, you should use motor reactors (see **[1]** in figure above) in the output of the frequency inverter.

The current consumption of all motors connected in parallel must not exceed the frequency inverter's rated output current I2N.

Electronic motor protection cannot be used when operating the frequency inverter with several parallel connected motors. You must, however, protect each motor with thermistors and/or overload relays.

The use of a motor protective circuit breaker at the frequency inverter's output can lead to nuisance tripping.

Motor and Circuit Type

The motor's stator winding can be connected in a star or delta configuration, in accordance with the rated operational data on the nameplate.

Example of a Motor Ratings Plate

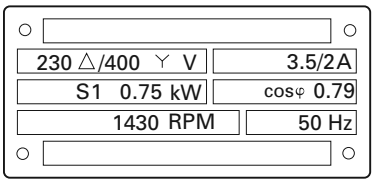

Star and Delta Circuit Types

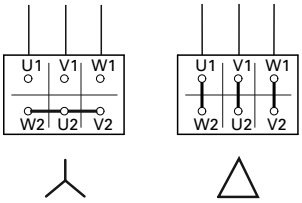

The three-phase motor with the rating plate based on the figure shown above, can be run in a star or delta connection. The operational characteristic curve is determined by the ratio of motor voltage and motor frequency, in this case.

87-Hz Characteristic Curve

In the delta circuit with 400V and 87 Hz, the motor shown in the figure above was released with three times-fold output (~1.3 kW).

Because of the higher thermal loading, using only the next higher motor output according to the list (1.1 kW) is recommended. The motor (in this example) therefore still has 1.47-fold higher output compared with the listed output (0.75 kW).

With the 87-Hz characteristic curve, the motor also works in the range from 50 to 87 Hz with an unattenuated field. The pull-out torque remains at the same level as in input operation with 50 Hz.

The heat class of the motor must be at least F in 87-Hz operation.

V/Hz-Characteristic Curve

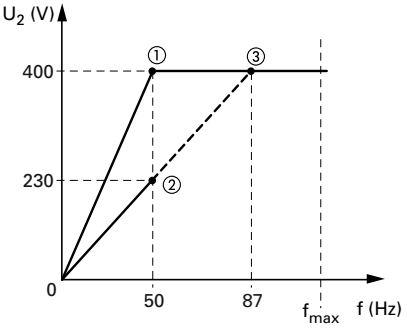

The following table shows the allocation of possible frequency inverters depending on the input voltage and the type of circuit.

Assignment of Frequency Inverters to Example Motor Circuit (See Figure Above)

Frequency Inverters	MMX12AA3D7_	MMX32AA3D7_	MMX34AA2D4_	MMX34AA4D3_
Rated operational current	3.7A	3.7A	2.4A	4.3A
Input voltage	1 AC 230V	1 AC 230V	3 AC 400V	3 AC 400V
Motor circuit	Delta	Delta	Star	Delta
V/Hz-characteristic curve	②	②	①	③
Motor current	3.5A	3.5A	2.0A	3.5A
Motor voltage	3 AC 0–230V	3 AC 0–230V	3 AC 0–400V	3 AC 0–230V
Motor speed	1430 min^{-1}	1430 min^{-1}	1430 min^{-1}	2474 min^{-1} ④
Motor frequency	50 Hz	50 Hz	50 Hz	87 Hz ④

Notes

① Star connection: 400V, 50 Hz.
② Delta connection: 230V, 50 Hz.
③ Delta connection: 400V, 87 Hz.
④ Note the permitted limit values of the motor.

Bypass Operation

If you want to have the option of operating the motor with the frequency inverter or directly from the input supply, the input branches must be interlocked mechanically.

CAUTION

Debounced inputs may not be used in the safety circuit diagram.

A changeover between the frequency inverter and the input supply must take place in a voltage-free state.

WARNING

The frequency inverter outputs (U, V, W) must not be connected to the input voltage (destruction of the device, risk of fire).

Bypass Motor Control (Example)

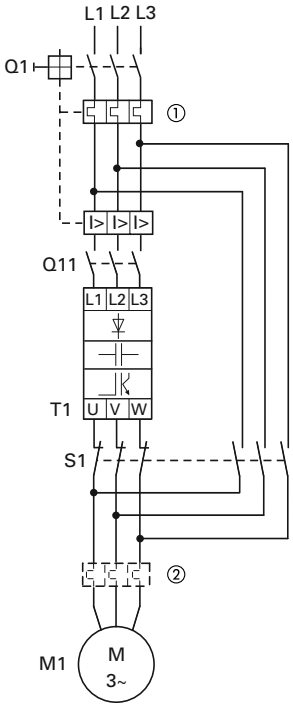

Item Number	Description
1	Input/bypass contactor
2	Output contactor

CAUTION

Debounced inputs may not be used in the safety circuit diagram.

Switch S1 must switch only when frequency inverter T1 is at zero current.

Contactors and switches (S1) in the frequency inverter output and for the direct start must be designed based on utilization category AC-3 for the rated operational current of the motor.

Connecting EX Motors

Note the following when connecting explosion-protected motors:

- The frequency inverter must be installed outside the EX area
- Note the branch- and country-specific standards for explosion-protected areas (ATEX 100a)
- Note the standards and information of the motor manufacturer regarding operation on frequency inverters—for example, if motor reactors (du/dt-limiting) or sinus filters are specified
- Temperature monitors in the motor windings (thermistor, thermo-Click) are not to be connected directly to frequency inverters but must be connected via an approved trigger apparatus for EX areas

Sinusoidal Filter

Sinusoidal filters are connected in the output of the frequency inverter. They allow the use of long motor cables with reduced conducted and radiated emission.

The upstream sinusoidal filter enables the reduction of losses and noise in the motor.

Disadvantage. Sinusoidal filters have a system voltage drop of around 30V per phase.

Note: Sinusoidal filters must only be used with permanently set pulse frequencies.

Installation

Introduction

This chapter provides a description of the installation and the electrical connections for the frequency inverter M-Max series.

While installing and/or assembling the frequency inverter, cover all ventilation slots in order to ensure that no foreign bodies can enter the device.

Perform all installation work with the specified tools and without the use of excessive force.

Installation Instructions

The instructions for installation in this manual apply for M-Max series frequency inverters under protection type IP20.

In order to meet the requirements in accordance with NEMA 1 (IP21), you must, depending on the size of the housing, use the optional housing accessories MMX-IP21-FS1, MMX-IP21-FS2 or MMX-IP21-FS3.

The required installation instructions are shown in the setup instructions AWA8230-2417.

Mounting Position

Mounting Position (FS1–FS3)

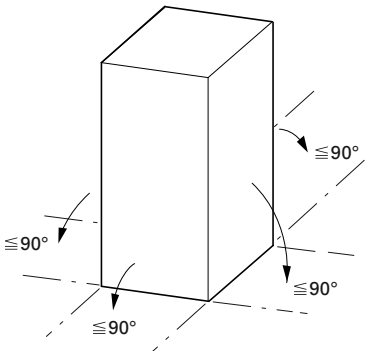

An installation that is turned by 180° (stood on its head) is not permitted.

Mounting Position (FS4 and FS5)

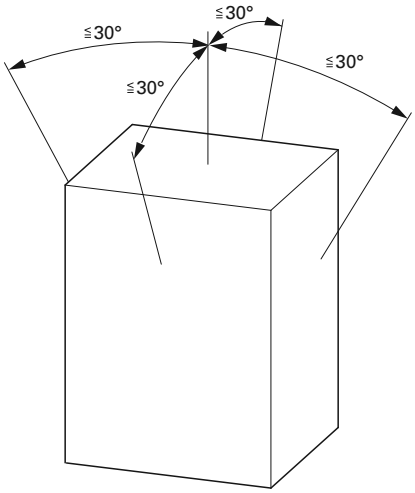

An installation that is turned by 180° (stood on its head) is not permitted.

The vertical mounting position may be tilted by up to 30 degrees.

Cooling Measures

In order to guarantee sufficient air circulation, enough thermal clearance must be ensured according to the frame size (rating) of the frequency inverter.

Air-Cooling Space

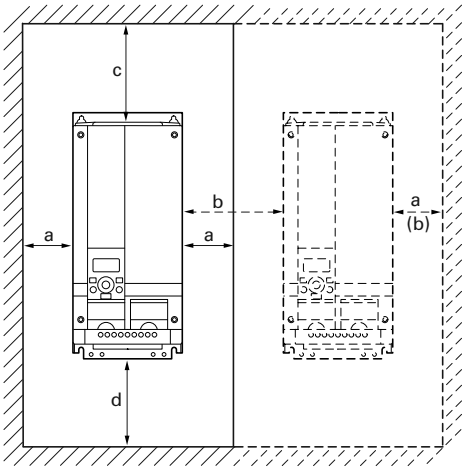

Minimum Clearance at the Front

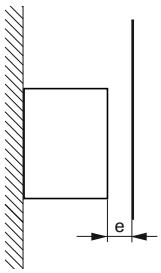

Note: The frequency inverters of the M-Max series are air-cooled with an internal fan.

Minimum Clearance and Required Cooling Air

	a ① mm	b ① mm	c mm	d mm	e mm	V m^3/h
FS1	20	50	100	50	15	10
FS2	20	50	100	50	15	10
FS3	20	50	100	50	15	30
FS4	20	50	100	100	20	45
FS5	20	50	120	100	20	75

Note

① With frame sizes FS1, FS2 and FS3 the side clearance can be 0 mm if the ambient air temperature does not exceed +40°C, the pulse frequency (P11.9) does not exceed 4 kHz and the elevation does not exceed 1000m.
Higher ambient air temperatures pulse frequencies and installation heights above 1000m require a minimum side clearance of 20 mm from a "passive" neighbor (housing wall) and a clearance of 50 mm from an "active" **[need info]** neighbor (frequency inverter, switched-mode power supply unit).
With MMX34…014_, the side clearance to a "passive" neighbor must always be 20 mm in all operating conditions and always 50 mm to the "active" neighbor.

Note: Please note that the installation makes it possible to open and close the control signal terminal covers without any problems.

Note: The pulse frequency (f_{PWM}) can be adjusted with parameter P11.9.

Note: Devices with strong magnetic fields (e.g. reactors or transformers) should not be installed in the immediate vicinity of the M-Max device.

Air-Baffle Due to Increased Circulation with Device Fan

If devices are arranged vertically above each other, the clearance between the two devices must at least be equal to dimension c + d ("active neighbors").

With frame sizes FS4 and FS5 a baffle must be fitted between the two devices. Otherwise, the upper device may overheat due to the device fan fitted at the top of the lower device.

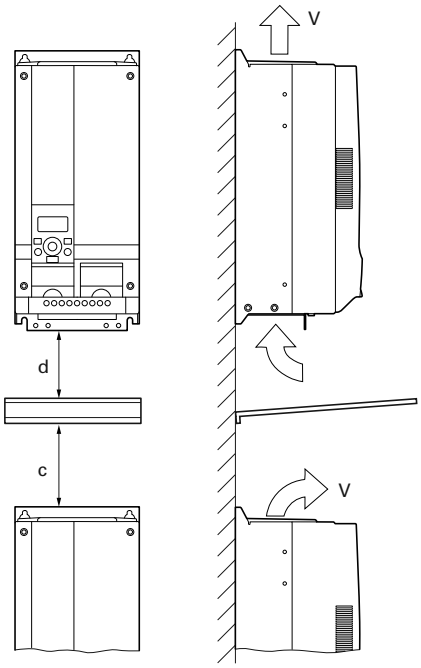

Fixing

You can mount an M-Max frequency inverter on screw mounts or on a mounting rail.

Install the frequency inverter only on a nonflammable mounting base (for example, on a metal plate).

Dimensions and weights of the M-Max frequency inverter are located in the appendix.

Fastening with Screws (FS1–FS5)

The number and arrangement of required bore holes (mounting dimensions a1 and b1 shown in the figure below) are also imprinted in the base plate of the M-Max device, FS1–FS3.

Mounting Dimensions

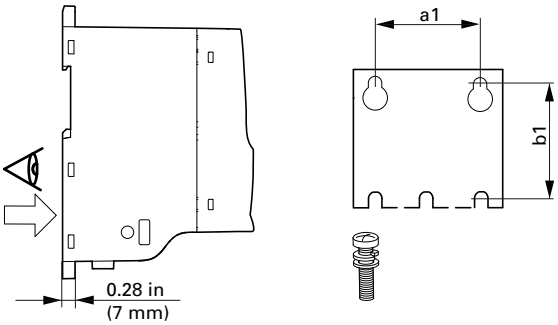

Install the screws in the specified positions first. Then set the frequency inverter on the prepared wall-mount and tighten all screws.

Configuration for Mounting with Screws

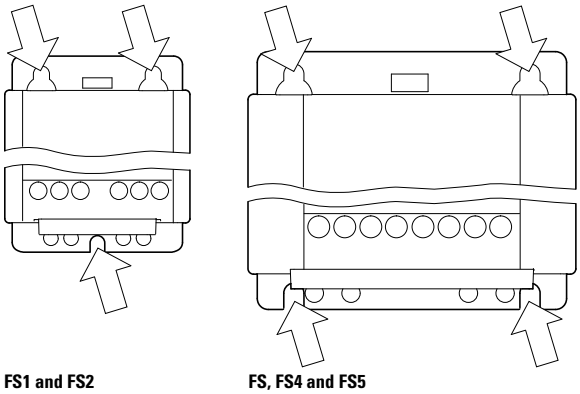

	a1 mm [in]	b1 mm [in]	Mass kg [lb]	Torque Nm [ft-lb]	Mounting Screw
FS1	38 [1.5]	147 [5.79]	0.55 [1.2]	1.3 [0.95]	M4
FS2	62.5 [2.46]	182 [7.17]	0.7 [1.5]	1.3 [0.95]	M4
FS3	75 [2.95]	242 [9.53]	0.99 [2.2]	1.3 [0.95]	M5
FS4	140 [5.51]	351 [13.82]	8 [18.0]	4.6 [3.4]	M6
FS5	140 [5.51]	398 [13.82]	10 [22.0]	4.6 [3.4]	M6

Fastening on Mounting Rails (FS1–FS3)

As an alternative, you can also fasten FS1–FS3 to a mounting rail conforming with IEC/EN 60715.

Mounting Rail Conforming with IEC/EN 60715

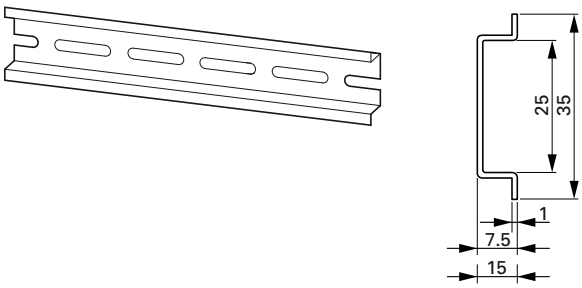

Set the frequency inverter onto the mounting rail **[1]** from above and press until it rests in place **[2]**.

Fastening to the Mounting Rail

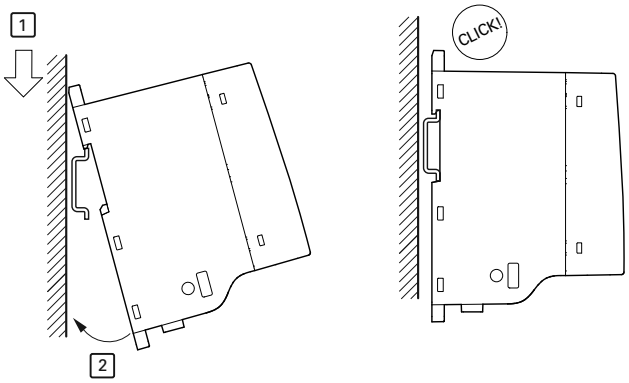

Dismantling from Mounting Rails

To remove the device, push the spring-loaded clip down. A marked cutout is provided on the upper edge of the M-Max device. A flat-bladed screwdriver (blade width 0.20 in [5 mm]) is recommended for pushing the clip down.

Demounting

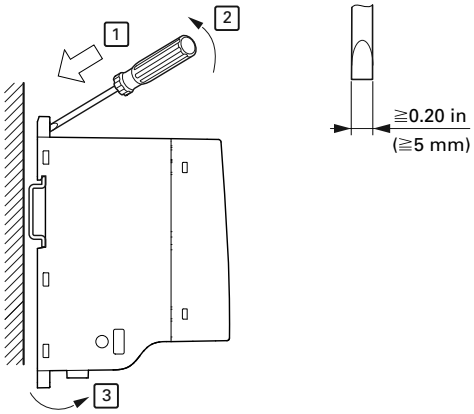

Cable Flange Plate (Accessories)

The M-Max is supplied with a cable routing plate and brackets. These enable you to arrange the connection cables as required on the frequency inverter and fasten the shielded cables in accordance with EMC requirements.

First, install the cable clamp plate for the connection lines in the power section **[1]** and then the cable clamping plate **[2]** for the control lines. The required installation screws (M4) are included as standard.
[3] = gland plates in the power section.

Mount the cable routing plate before the electrical installation.

Mounting the Cable Routing Plate and the Brackets

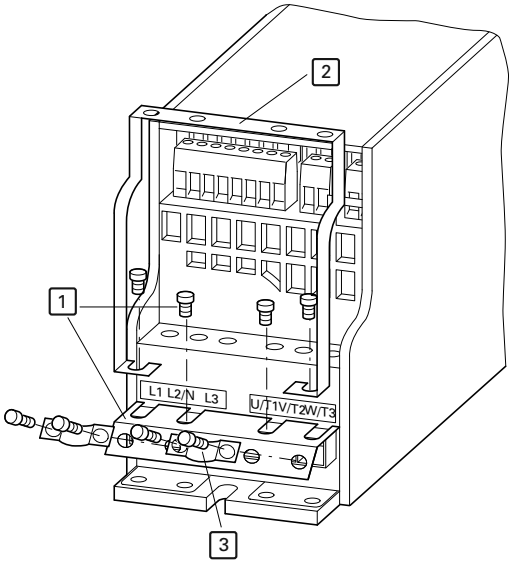

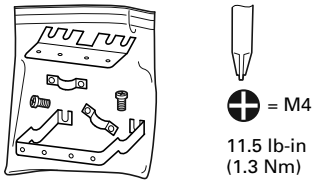

EMC Installation

The responsibility to comply with the legally stipulated limit values and thus the provision of electromagnetic compatibility is the responsibility of the end user or system operator. This operator must also take measures to minimize or remove emissions in the environment concerned (see figure on **Page 22**). He must also use means to increase the interference immunity of the system devices.

In a drive system (PDS) with frequency inverters, you should take measures for electromagnetic compatibility (EMC) while doing your planning, because changes or improvements to the installation site, which are required in the installation or while mounting, are normally associated with additional higher costs.

The technology and system of a frequency inverter cause the flow of high frequency leakage current during operation. All grounding measures must therefore be implemented with low impedance connections over a large surface area.

With leakage currents greater than 3.5 mA, in accordance with VDE 0160 or EN 60335, either

- the protective conductor must have a cross-section ≧10 mm^2
- the protective conductor must be open-circuit monitored, or
- the second protective conductor must be fitted

For an EMC-compliant installation, we recommend the following measures:

- Installation of the frequency inverter in a metallic, electrically conducting enclosure with a good connection to earth
- Shielded motor cables (short cable lengths)

Ground all conductive components and housings in a drive system using as short a line as possible with the greatest possible cross-section (Cu-braid).

EMC Measures in the Control Panel

For EMC-compatible installation, connect all metallic parts of the device and the switching cabinet together over broad surfaces and so that high-frequencies will be conducted. Mounting plates and cabinet doors should make good contact and be connected with short HF-braided cables. Avoid using painted surfaces (anodized, chromized). An overview of all EMC measures is provided in the figure on **Page 31**.

Install the frequency inverter as directly as possible (without spacers) on a metal plate (mounting plate).

Route input and motor cables in the switch cabinet as close to the ground potential as possible. This is because free moving cables act as antennas.

When laying HF cables (for example, shielded motor cables) or suppressed cables (for example, input supply cables, control circuit and signal cables) in parallel, a minimum clearance of 11.81 in (300 mm) should be ensured in order to prevent the radiation of electromagnetic energy. Separate cable routing should also be ensured when large voltage potential differences are involved. Any necessary crossed cabling between the control signal and power cables should always be implemented at right angles (90 degrees).

Never lay control or signal cables in the same duct as power cables. Analog signal cables (measured, reference and correction values) must be shielded.

Earthing

The ground connection (PE) in the cabinet should be connected from the input supply to a central earth point (mounting plate). All protective conductors should be routed in star formation from this earth point and all conductive components of the PDS (frequency inverter, motor reactor, motor filter, main choke) are to be connected.

Avoid ground loops when installing multiple frequency inverters in one cabinet. Make sure that all metallic devices that are to be grounded have a broad area connection with the mounting plate.

Screen Earth Kit

Cables that are not shielded work like antennas (sending, receiving). Make sure that any cables that may carry disruptive signals (for example, motor cables) and sensitive cables (analog signal and measurement values) are shielded apart from one another with EMC-compatible connections.

The effectiveness of the cable shield depends on a good shield connection and a low shield impedance.

Use only shields with tinned or nickel-plated copper braiding. Braided steel shields are unsuitable.

Control and signal lines (analog, digital) should always be grounded on one end, in the immediate vicinity of the supply voltage source (PES).

EMC-Compliant Setup (Example: M-Max)

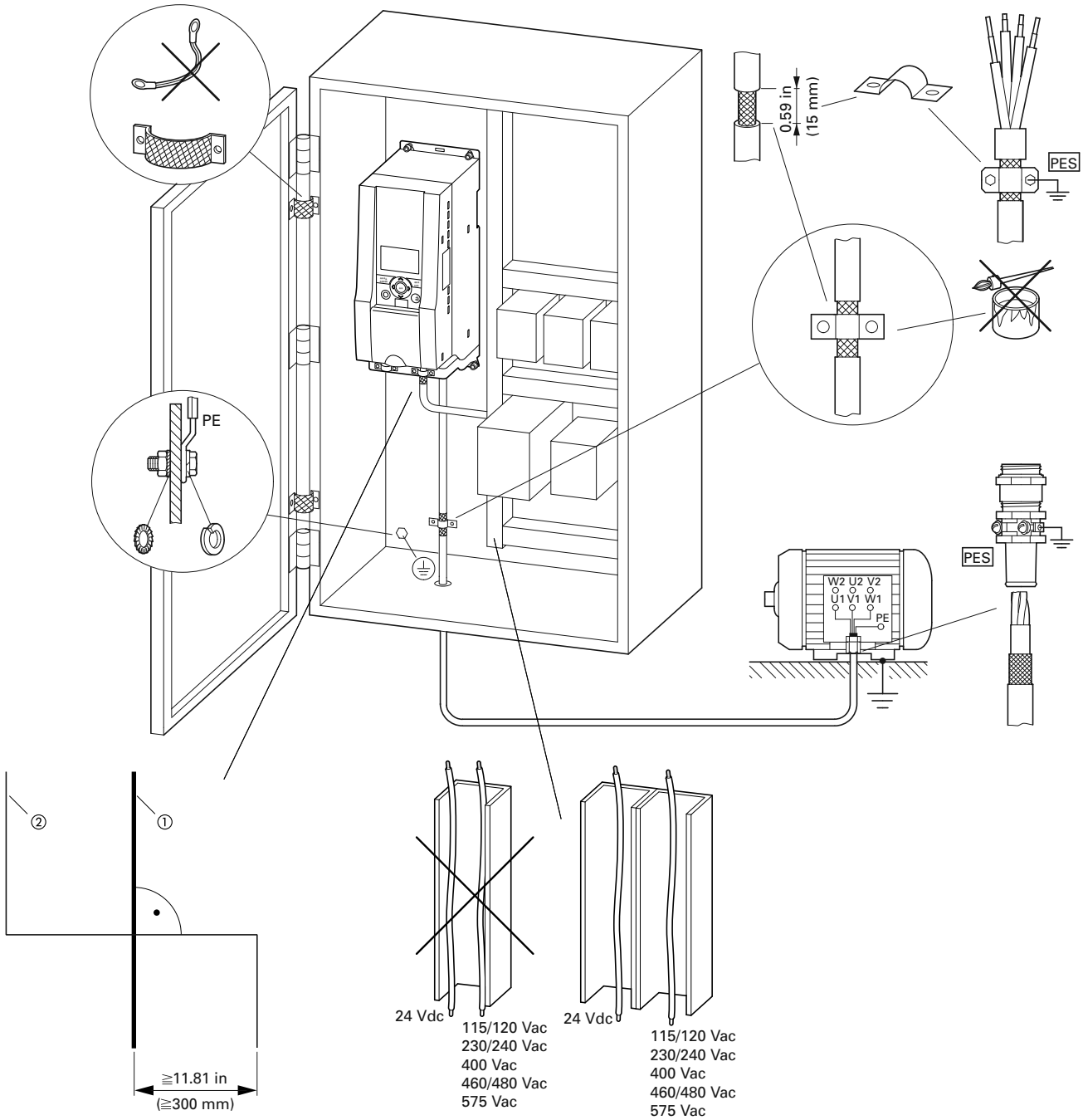

Notes

① Power cable: L1, L2/N, L3 and U/T1, V/T2, W/T3, R+, R–

② Control and signal lines: 1 to 26, A, B, fieldbus connection

Large-area connection of all metallic control panel components.

Mounting surfaces of frequency inverter and cable shielding must be free from paint.

Connect the cable shielding in the output of the frequency inverter with a large surface area contact to the ground potential (PES).

Large-area cable shield contacts with motor.

Large-area earth connection of all metallic parts.

Electrical Installation

WARNING

Carry out wiring work only after the frequency inverter has been correctly mounted and secured.

WARNING

Electric shock hazard—risk of injuries!

Carry out wiring work only if the unit is de-energized.

CAUTION

Debounced inputs may not be used in the safety circuit diagram.

Fire hazard!

Only use cables, protective switches, and contactors that feature the indicated permissible nominal current value.

CAUTION

Debounced inputs may not be used in the safety circuit diagram.

Ground contact currents in frequency inverters are greater than 3.5 mA (AC). According to product standard IEC/EN 61800-5-1, an additional equipment grounding conductor must be connected, or the cross-section of the equipment grounding conductor must be at least 0.39 in^2 (10 mm^2).

WARNING

The components in the frequency inverter's power section remain energized up to five (5) minutes after the supply voltage has been switched off (intermediate circuit capacitor discharging time).

Pay attention to hazard warnings!

DANGER
5 MIN

Note: Complete the following steps with the specified tools and without using force.

Connection to Power Section

The following figure shows the general connections for the frequency inverter in the power section.

Three-Phase Input Connection

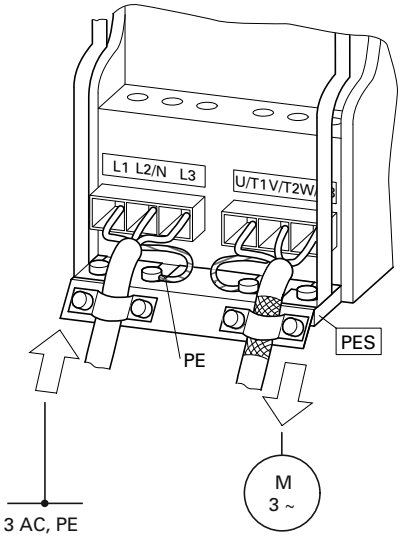

Terminal Designations in the Power Section

- L1, L2/N, L3: Connection terminals for the supply voltage (input, input voltage):
  - Single-phase AC voltage: connection to L2/N and L3 on MMX11_
  - Single phase AC voltage: Connection to L1 and L2/N with MMX12_
  - Three-phase AC voltage: Connection to: L1, L2/, L3 with MMX32_, MMX34_ and MMX35_.
- U/T1, V/T2, W/T3: Connection terminals for the three-phase line to the AC motor (output, frequency inverter)
- ⏚ PE: connection for protective ground (reference potential). PES with mounted cable routing plate for shielded cables
- R+, R–: Connection terminals for external brake resistance (only with MMX32_, MMX34_ and MMX35_, output braking transistor)

Connection to Power Section

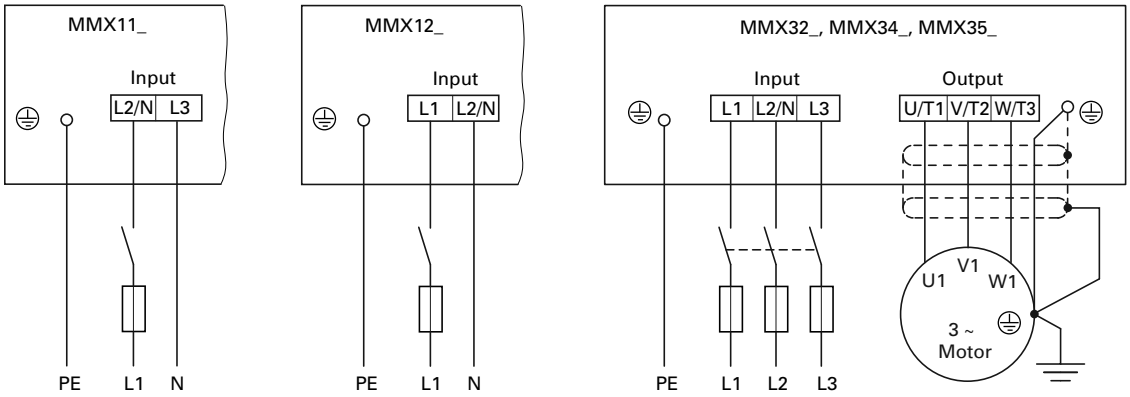

Ground Connection

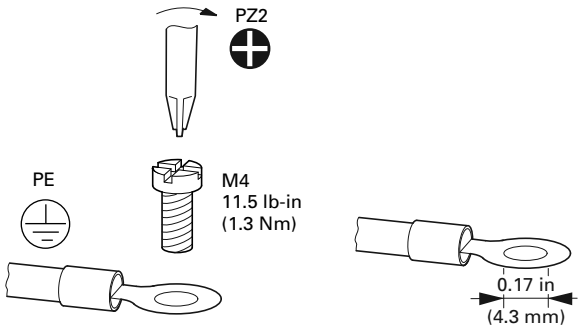

The ground connection is connected directly with the cable clamp plates.

The shielded cables between the frequency inverter and the motor should be as short as possible. Connect the shielding on both ends and over a large surface area with protective ground PES (Protective Earth Shielding). You can connect the shielding of the motor cable directly to the cable clamp plate (360 degrees coverage) with the protective ground.

The frequency inverter must always be connected to the ground potential via a grounding cable (PE).

Connection in Power Section

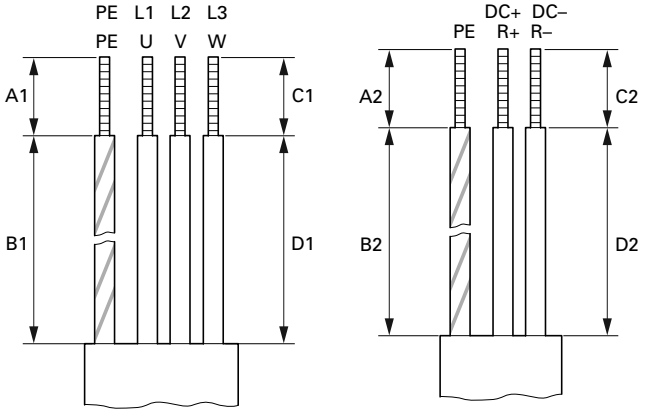

Stripping Lengths in the Power Section in inches (mm)

	Supply Voltage (Input)				Motor (Output)				DC-Link, Brake Resistor			
	L1, L2, L3		PE ⏚		U/T1, V/T2, W/T3		PE ⏚		DC+/R+, R–, DC–		PE ⏚	
	C1	D1	A1	B1	C1	D1	A1	B1	C2	D2	A2	B2
FS1	0.30 (8.0)	0.80 (20.0)	0.30 (8.0)	1.40 (35.0)	0.30 (8.0)	0.80 (20.0)	0.30 (8.0)	1.40 (35.0)	0.30 (8.0)	0.80 (20.0)	0.30 (8.0)	1.40 (35.0)
FS2	0.30 (8.0)	0.80 (20.0)	0.30 (8.0)	1.40 (35.0)	0.30 (8.0)	0.80 (20.0)	0.30 (8.0)	1.40 (35.0)	0.30 (8.0)	0.80 (20.0)	0.30 (8.0)	1.40 (35.0)
FS3	0.30 (8.0)	0.80 (20.0)	0.30 (8.0)	1.40 (35.0)	0.30 (8.0)	0.80 (20.0)	0.30 (8.0)	1.40 (35.0)	0.30 (8.0)	0.80 (20.0)	0.30 (8.0)	1.40 (35.0)
FS4	0.30 (8.0)	1.60 (40.0)	0.30 (8.0)	1.20 (30.0)	0.30 (8.0)	2.00 (50.0)	0.30 (8.0)	1.20 (30.0)	0.30 (8.0)	1.60 (40.0)	0.30 (8.0)	1.60 (40.0)
FS5	0.30 (8.0)	1.60 (40.0)	0.30 (8.0)	1.20 (30.0)	0.30 (8.0)	2.00 (50.0)	0.30 (8.0)	1.20 (30.0)	0.30 (8.0)	2.00 (50.0)	0.30 (8.0)	2.00 (50.0)

Prevent the shielding from becoming unbraided, for example, by pushing the separated plastic covering over the end of the shielding or with a rubber grommet on the end of the shielding. As an alternative, in addition to a broad area cable clip, you can also twist the shielding braid at the end and connect to protective ground with a cable clip. To prevent EMC disturbance, this twisted shielding connection should be made as short as possible (see figure below).

Screened Connection Cable

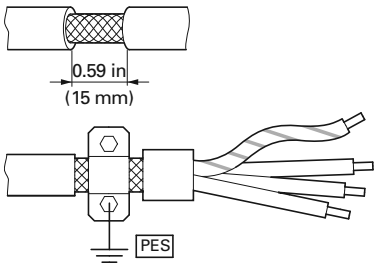

Shielded, four-wire cable is recommended for the motor cables. The green-yellow line of this cable connects the protective ground connections from the motor and the frequency inverter and therefore minimizes the equalizing current loads on the shielding braid.

Connection with Twisted Cable Shielding
(Recommended value for twisted cable shielding: b ≧1/5 a)

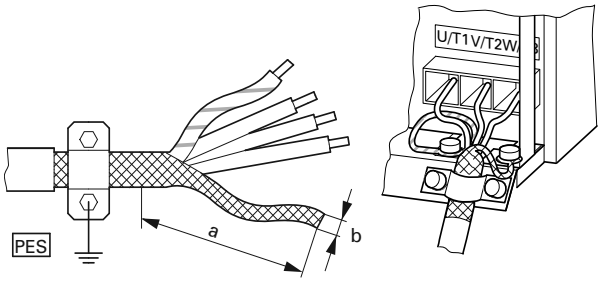

Twisted shielding braid should be connected with a ring cable terminal (see figure on **Page 33**) on PES.

The following figure shows the construction of a four-wire, shielded motor line (recommended specifications).

Four-Core Shielded Motor Supply Cable

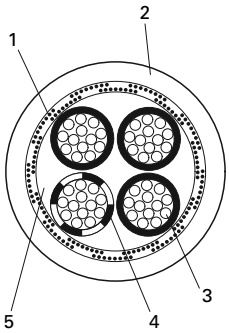

Item Number	Description
1	Cu shield braid
2	PVC outer sheath
3	Drain wire (copper strands)
4	PVC core insulation, 3 x black, 1 x green–yellow
5	Textile and PVC fillers

If there are additional subassemblies in a motor circuit (for example, motor contactors, relays, motor reactor, sinusoidal filters, or terminals), interrupt the shielding of the motor cable in the vicinity of these subassemblies. Connect this over a broad surface area with the mounting plate (PES). Free or non-shielded connection cables should not be any longer than about 11.81 in (300 mm).

Arrangement and Connection of the Power Terminals

The arrangement and size of the connection terminals depends on the construction of the power section (FS1, FS2, FS3).

The cross-sections to use in the connections, the tightening torques for screws and respective fuses are listed in the following table.

Arrangement and Size of the Connection Terminals

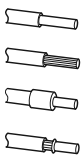

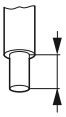

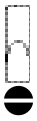

	Part Numbers	mm²	AWG	mm	in	Nm	ft-lbs	mm	Terminal Configuration
FS1	MMX12AA1D7_ MMX12AA2D4_ MMX12AA2D8_	0.2–2.5	24–12	8	0.31	0.5–0.6	0.37–0.44	0.6 x 3.5	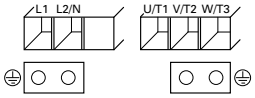
	MMX32AA1D7_ MMX32AA2D4_ MMX32AA2D8_	0.2–2.5	24–12	8	0.31	0.5–0.6	0.37–0.44	0.6 x 3.5	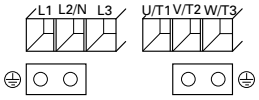
	MMX34AA1D3_ MMX34AA1D9_ MMX34AA2D4_	0.2–2.5	24–12	8	0.31	0.5–0.6	0.37–0.44	0.6 x 3.5	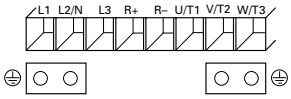
FS2	MMX11AA1D7_ MMX11AA2D4_ MMX11AA2D8_ MMX11AA3D7_	0.2–2.5	24–12	8	0.31	0.5–0.6	0.37–0.44	0.6 x 3.5	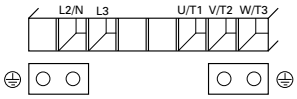
	MMX12AA3D7_ MMX12AA4D8_ MMX12AA7D0_	0.2–2.5	24–12	8	0.31	0.5–0.6	0.37–0.44	0.6 x 3.5	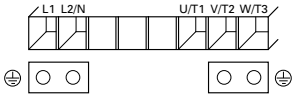
	MMX32AA3D7_ MMX32AA4D8_ MMX32AA7D0_	0.2–2.5	24–12	8	0.31	0.5–0.6	0.37–0.44	0.6 x 3.5	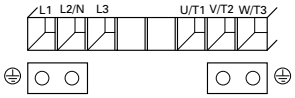
	MMX34AA3D3_ MMX34AA4D3_ MMX34AA5D6_	0.2–2.5	24–12	8	0.31	0.5–0.6	0.37–0.44	0.6 x 3.5	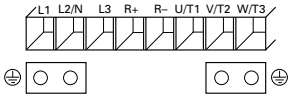

Arrangement and Size of the Connection Terminals, continued

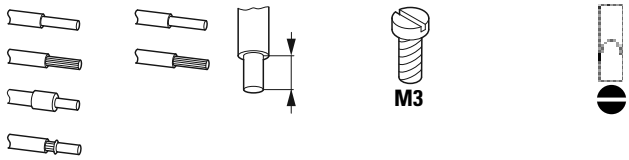

	Part Numbers	mm^2	AWG	mm	in	Nm	ft-lbs	mm	Terminal Configuration
FS3	MMX11AA4D8_	0.2–4	24–10	8	0.31	0.5–0.6	0.37–0.44	0.6 x 3.5	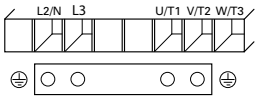
	MMX12AA9D6_	0.2–4	24–10	8	0.31	0.5–0.6	0.37–0.44	0.6 x 3.5	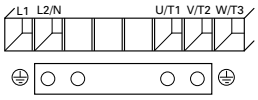
	MMX32AA011_	0.2–4	24–10	8	0.31	0.5–0.6	0.37–0.44	0.6 x 3.5	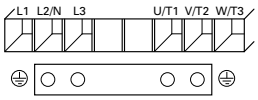
	MMX34AA7D6_ MMX34AA9D0_ MMX34AA012_ MMX34AA014_	0.2–4	24–10	8	0.31	0.5–0.6	0.37–0.44	0.6 x 3.5	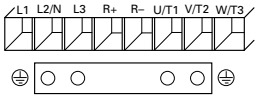
FS4	MMX32AA017_ MMX32AA025_	0.5–16	20–6	8	0.39	1.2–1.5	0.88–1.11	0.6 x 3.5	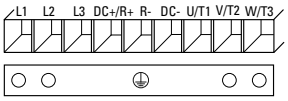
	MMX34AA016_ MMX34AA023_	0.5–16	20–6	8	0.39	1.2–1.5	0.88–1.11	0.6 x 3.5	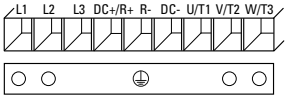
FS5	MMX32AA031_ MMX32AA038_	0.5–16	20–6	8	0.39	1.2–1.5	0.88–1.11	0.6 x 3.5	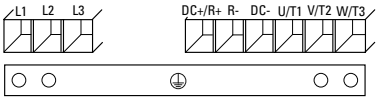
	MMX34AA031_ MMX34AA038_	0.5–16	20–6	8	0.39	1.2–1.5	0.88–1.11	0.6 x 3.5	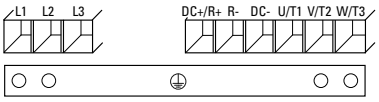

Connection on Control Section

The control signal terminals are arranged under the front cover flap.

Position of Control Signal Terminals

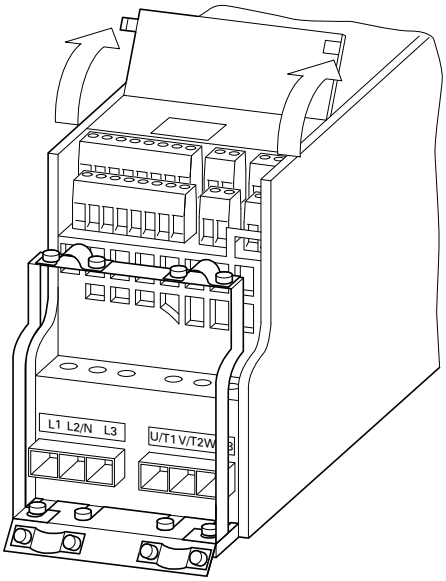

The cable hold down clamps contained in the scope of delivery can be mounted on the cable clamp plate of the power section.

The control lines should be shielded and twisted. The shielding is exposed on one side (PES), on the cable hold down clamps on the frequency inverter for instance.

Prevent the shielding from becoming unbraided, for example, by pushing the separated plastic covering over the end of the shielding or with a rubber grommet on the end of the shielding.

Prevent the Shield from Becoming Unbraided

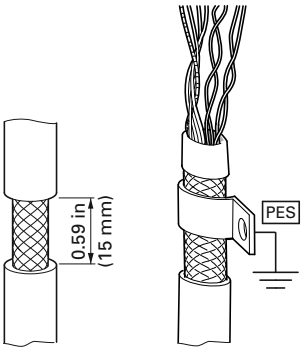

As an alternative, in addition to a broad area cable clip, you can also twist the shielding braid at the end and connect to protective ground with a cable clip. To prevent EMC disturbance, this twisted shielding connection should be made as short as possible (see figure on **Page 35**).

Example for a Single-Side Connection (PES) to the Frequency Inverter

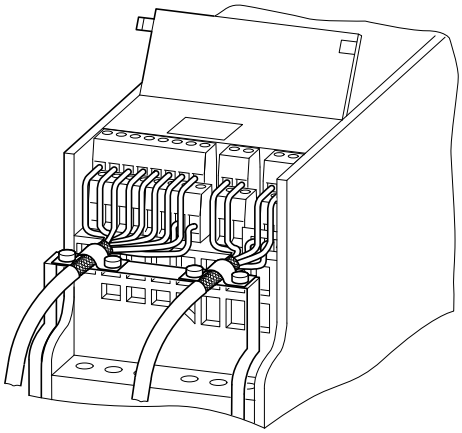

Prevent any unraveling on the other end of the control line with a rubber grommet. The shielding braid is not to make any connection with protective ground here because this would cause problems with an interference loop.

Example for an Insulated End of the Control Cable

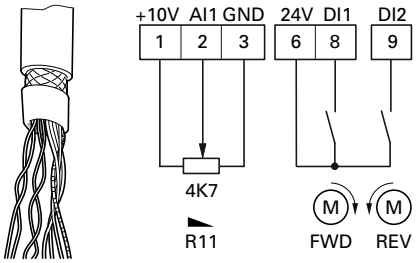

Control Signal Terminals Arrangement and Connections

ESD Measures

WARNING

Discharge yourself on a grounded surface before touching the control signal terminals and the controller PCB. This protects the device from destruction by electrostatic discharge.

The following figure shows the arrangement and designation of M-Max control signal terminals.

Control Signal Terminals Assignments and Designations

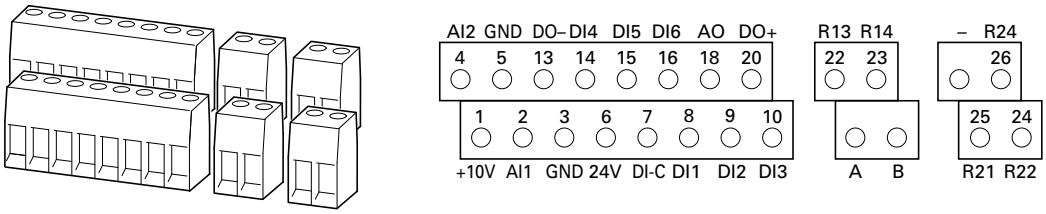

Possible Connection Line Sizes and Specifications on Control Signal Terminals

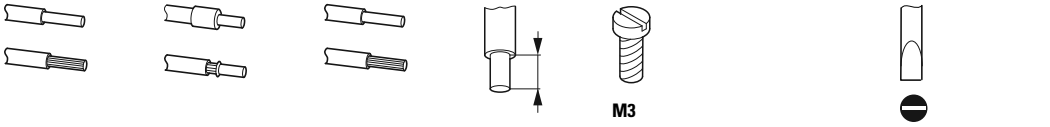

mm^2	mm^2	AWG	mm	Nm	ft-lbs	mm
0.14–1.5	0.25–0.5	26–16	5	0.22–0.25	0.16–0.18	0.4 x 2.5

Microswitches and Control Signal Terminals

Four microswitches are arranged under the cover plate. These are used to directly configure the control signal terminals.

Microswitch Factory Settings

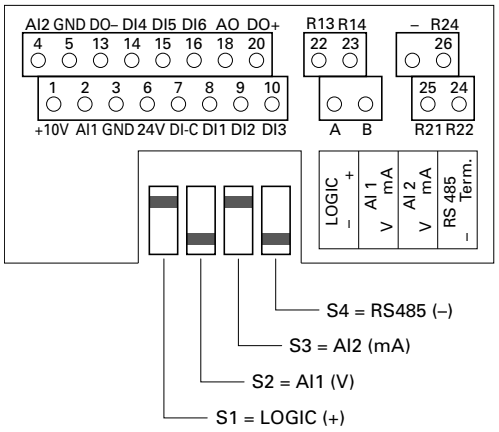

Microswitch Description

S1	LOGIC	Control logic: + = Positive logic (FS) Source type – = Negative logic Sink type
S2	AI1	Analog input 1 (P2.1): V = 0–10V (FS) mA = 4–20 mA
S3	AI2	Analog input 2 (P2.5): mA = 4–20 mA (FS) V = 0 –10V
S4	RS485	Bus terminating resistor (control signal terminal A/B): – = Disconnected Term. = Switched on (terminator)

Control Signal Terminal Functions

The functions that are set in the ex-factory and the electrical connection data of all control signal terminals are listed in the following table.

Factory-Set Control Terminal Functions

Terminal		Signal	Factory setting	Description
1	+10V	Output nominal voltage	—	Maximum load 10 mA, reference potential GND
2	AI1	Analog signal input 1	Frequency reference value ①	0–10V (R_i >200k ohms) 0/4–20 mA (R_B = 200 ohms) Selectable through microswitch S2
3	GND	Reference potential	—	0V
4	AI2	Analog input 2	PID controller, actual value ①	0–10V (R_i >200k ohms) 0/4–20 mA (R_B = 200 ohms) Selectable through microswitch S3
5	GND	Reference potential	—	0V
6	24V	Control voltage for DI1–DI6, output (+24V)	—	Maximum load 50 mA, reference potential GND
7	DI-C	Reference potential of the digital inputs DI1–DI6	LOGIC- (GND)	Selectable through microswitch LOGIC –/+
8	DI1	Digital input 1	FWD start enable, forward ①	0–30V (R_i >12k ohms)
9	DI2	Digital input 2	REV start enable, reverse ①	0–30V (R_i >12k ohms)
10	DI3	Digital input 3	Fixed frequency B0 ①	0–30V (R_i >12k ohms)
13	DO–	Digital output	Active = READY ①	Transistor, max. 50 mA, supply voltage control signal terminal 20
14	DI4	Digital input 4	Fixed frequency B1 ①	0–30V (R_i = 12k ohms)
15	DI5	Digital input 5	Error acknowledgment ①	0–30V (R_i = 12k ohms)
16	DI6	Digital input 6	PI controller deactivated ①	0–30V (R_i = 12k ohms)
18	AO	Analog output	Output frequency ①	0–10V, max. 10 mA
20	DO+	Digital output	Supply voltage, see control signal terminal 13	Supply voltage for digital output DO max. 48 Vdc, max. 50 mA
22	R13	Relay 1, normally open contact	Active = RUN ①	Maximum switching load: 250 Vac/2A or 250 Vdc/0.4A
23	R14	Relay 1, normally open contact	Active = RUN ①	Maximum switching load: 250 Vac/2A or 250 Vdc/0.4A
24	R22	Relay 2, changeover contact (N/C)	Active = FAULT ①	Maximum switching load: 250 Vac/2A or 250 Vdc/0.4A
25	R21	Relay 2, changeover contact	Active = FAULT ①	Maximum switching load: 250 Vac/2A or 250 Vdc/0.4A
26	R24	Relay 2, changeover contact (N/O)	Active = FAULT ①	Maximum switching load: 250 Vac/2A or 250 Vdc/0.4A
A	A	RS485 signal A	BUS-communication	Modbus RTU
B	B	RS485 signal B	BUS-communication	Modbus RTU

Note

① Programmable function (see "List of Parameters" on **Page 161**).

Analog Inputs

Connection area of the analog and digital inputs and outputs.

Control Signal Terminals (Digital and Analog Inputs/Outputs)

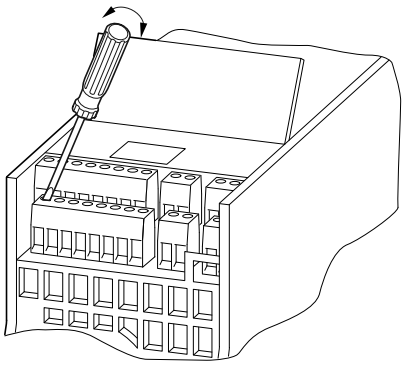

The M-Max frequency inverter has two analog inputs for specifying the frequency setpoint value and the actual value return to the PI controller:

- Control signal terminal 2 (AI1), voltage signal 0 (2)–10V, input resistance 200k ohms
- Control signal terminal 4 (AI2), current signal 0 (4)–20 mA, Load resistance 200 ohms

Adjusting and the parameter definition of analog inputs are described in "Analog Input (P2)" on **Page 68**.

The AI1 analog input (control signal terminal 2) is factory set for the frequency setpoint (P6.2). The setpoint can be input via an external potentiometer (recommended fixed resistance: 1–10k ohms). The fixed resistance of the setpoint potentiometer is fed from the frequency inverter via control signal terminal 1 with +10V (maximum load rating: 10 mA). Control signal terminals 3 and 5 are reference points (GND) for the analog setpoint signals.

Analog Setpoint Inputs AI1 and AI2

Connection example: Potentiometer (4.7k ohms) M22-R4K7; Article No. 229490

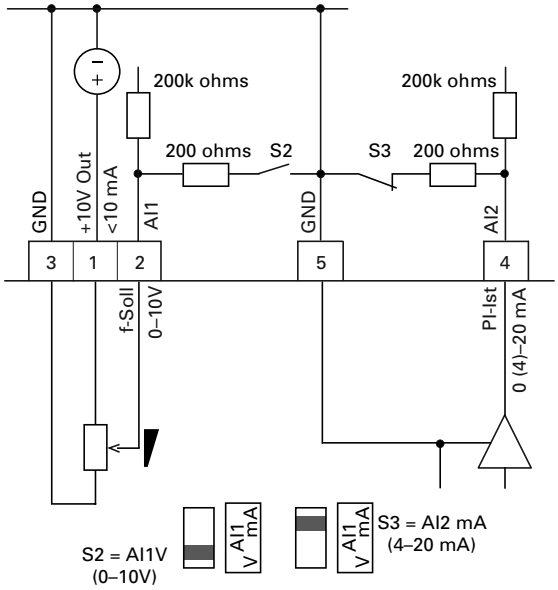

Analog Setpoint Value Signal, for Example, from a Superordinate Controller (PLC)

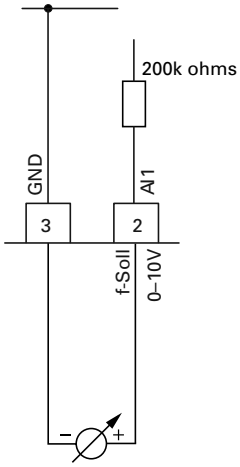

Analog Outputs

The frequency inverter provides an analog voltage signal (0–10V) at control signal terminal 18. This signal is factory set proportional to the output frequency (0–f_{max}). The calibration and parameterization of the analog output are described in "Analog Outputs (P4)" on **Page 77**.

Analog Output AO (Connection Examples)

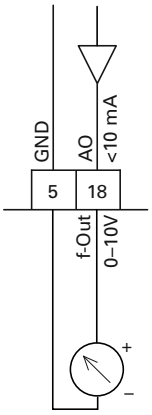

Digital Inputs

The frequency inverter has six digital inputs (DI1 to DI6) that have an identical function and operation. Their actuation is factory set for +24V (positive logic, source type). You can use the device internal control voltage of control signal terminal 6 (+24V, maximal 50 mA) or an external voltage source (+24V) with a residual ripple less than ±5% $\triangle U_a/U_a$. The parameterizable functions are described in "Digital Inputs (P3)" on **Page 71**.

Digital Inputs with Internal Supply Voltage

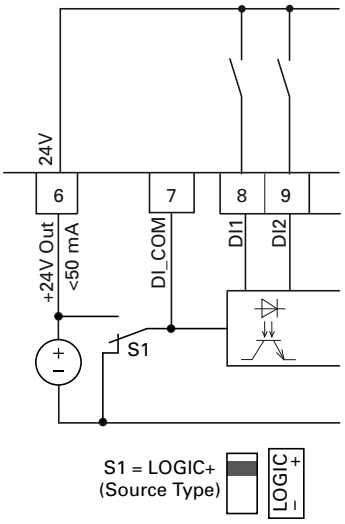

Digital Inputs with External Supply Voltage

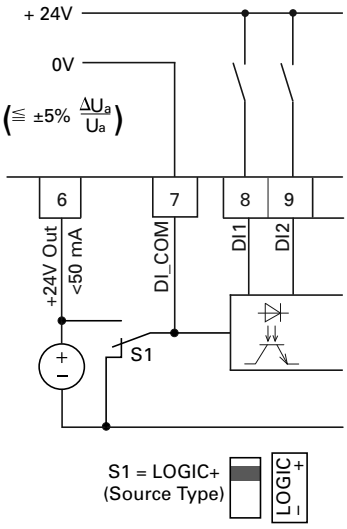

The factory set functions and the electrical connection data are shown in "Control Signal Terminal Functions" on **Page 40**.

Microswitch S1 (LOGIC) is used to change the control logic to so-called negative logic (sink type). The digital inputs are connected internally or externally via control signal terminal 7 (DI_COM) directly to +24V and to the corresponding 0V potential (GND) via input terminals DI1 to DI6.

Digital Inputs with Internal Supply Voltage (Negative Logic, Sink Type)

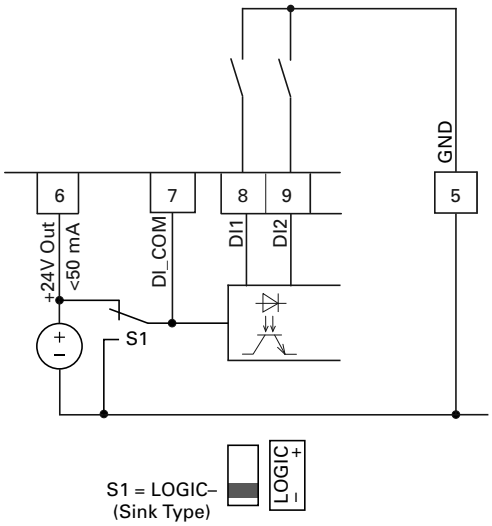

Digital Inputs with External Supply Voltage (Negative Logic, Sink Type)

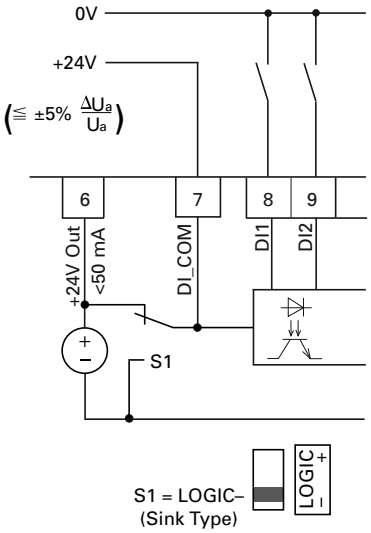

Digital Outputs (Transistor)

The transistor output (control signal terminal 13, DO–) can be supplied with the internal control voltage (+24V) via control signal terminal 20 (DO+) or with an external DC voltage of up to +48V. The permissible residual ripple must be less than ±5% $\triangle U_a/U_a$. The maximum permissible load current is 50 mA.

Digital Output DO and Connection Examples
(Coupling Relay with Freewheeling Diode: ETS4-VS3; Item No. 083094)

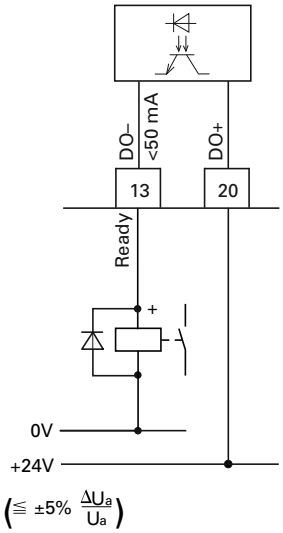

Connection Example and Operation of DO in Source and Sink Type

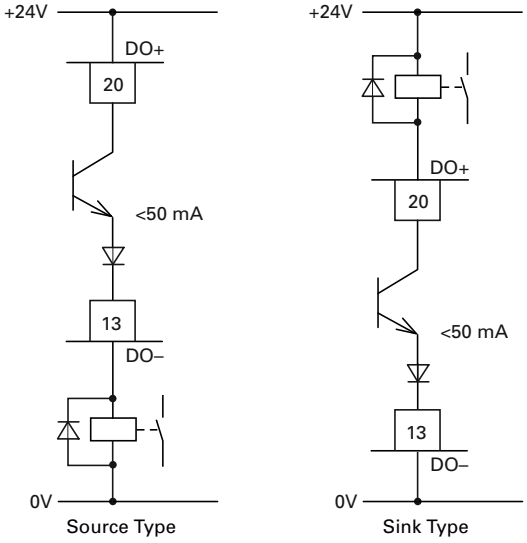

The parameter assignment is described in "Digital Outputs (P5)" on **Page 78**.

Digital Outputs (Relays)

The following figure shows the arrangement of the connection terminals for both relay contacts.

Relay Outputs with Connection Examples, Control Relay with Suppressor Circuit

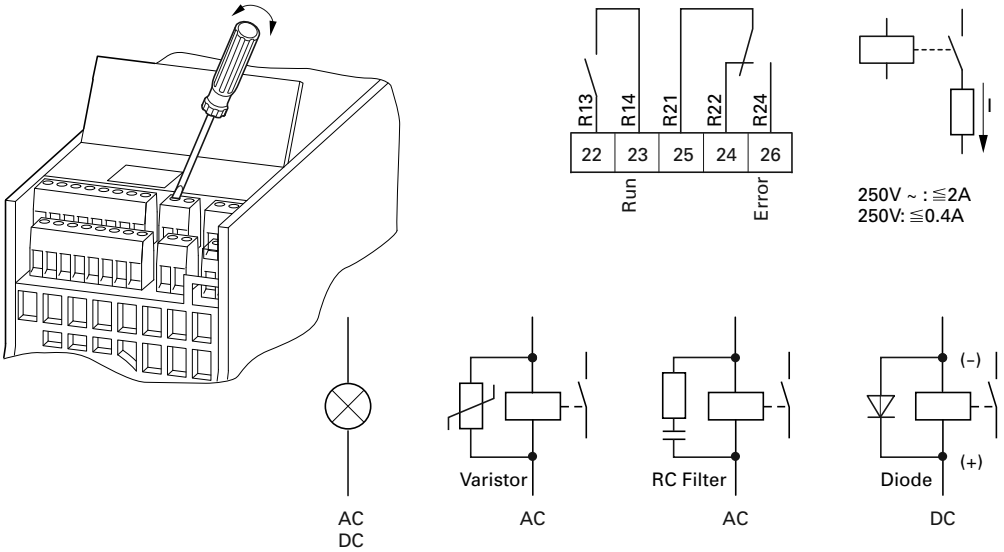

The two relay outputs (control signal terminals 22 to 26) enable the frequency inverter to generate galvanically isolated feedback signals in control circuits with other potentials:

- maximum switching capacity: 250 Vdc, 0.4A (DC voltage),
- maximum switching capacity: 250 Vac, 2A (AC voltage).

With voltages greater than 48V, you should fasten the connection cables of the relay in the opening on the right (housing).

Fixed Connection Cables at U >48V (Relay)

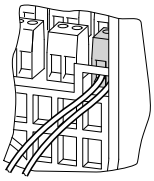

The functions for which parameters can be defined are described in "Digital Outputs (P5)" on **Page 78**.

The factory setting causes N/O contact R13/R14 (control signal terminal 22/23) of relay RO1 to indicate operation (RUN).

N/O contact R21/R24 (control signal terminal 25/26) of relay RO2 indicates a detected fault (ERROR = FAULT).

If the supply voltage of the frequency inverter is switched off upon the occurrence of an error message, the N/O R21/R24 opens again (relay drops out).

The functions for which parameters can be defined for both relays RO1 and RO2 are described in "Digital Outputs (P5)" on **Page 78**.

Serial Interface A-B

The following figure shows the connections of the serial interface and the position of the micro-switch for the bus termination resistor.

Connection Terminals of the Serial Interface and Microswitch S4 (Bus Terminating Resistor)

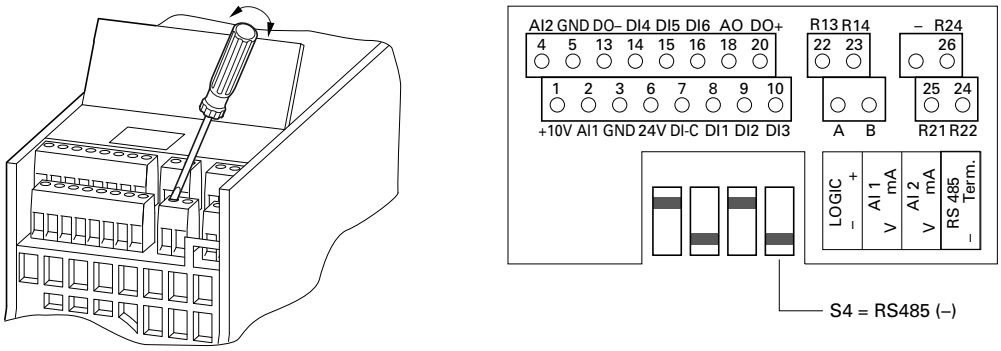

The two control signal terminals A and B enable the connection of a shielded RS485 twisted-pair cable.

The bus terminating resistor required at the end of a data cable is integrated in the frequency inverter and can be connected via microswitch S4.

The network cable must have a bus termination resistor (120 ohms) connected at each physical end to prevent reflections and the resulting transmission faults.

Two-Wire RS485 Connection
(Slave = M-Max Frequency Inverter)

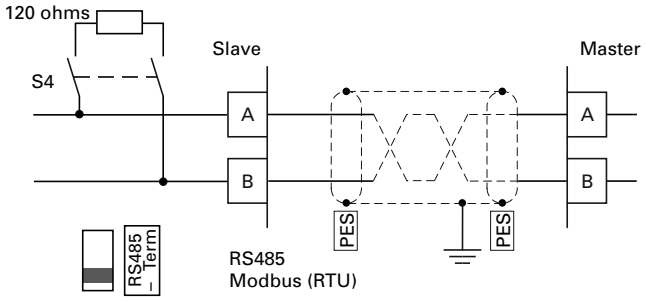

The parameter definition of the serial interface is described in "Serial Interface (Modbus RTU)" on **Page 131**.

Block Diagrams

The following diagrams show all the terminals on an M-Max frequency inverter and their functions at the default settings.

MMX11...N_ Block Diagram

MMX11 has a voltage doubler circuit inside the internal DC link. A power supply of 1 AC 120V (115V) will output a motor voltage of 3 AC 230V.

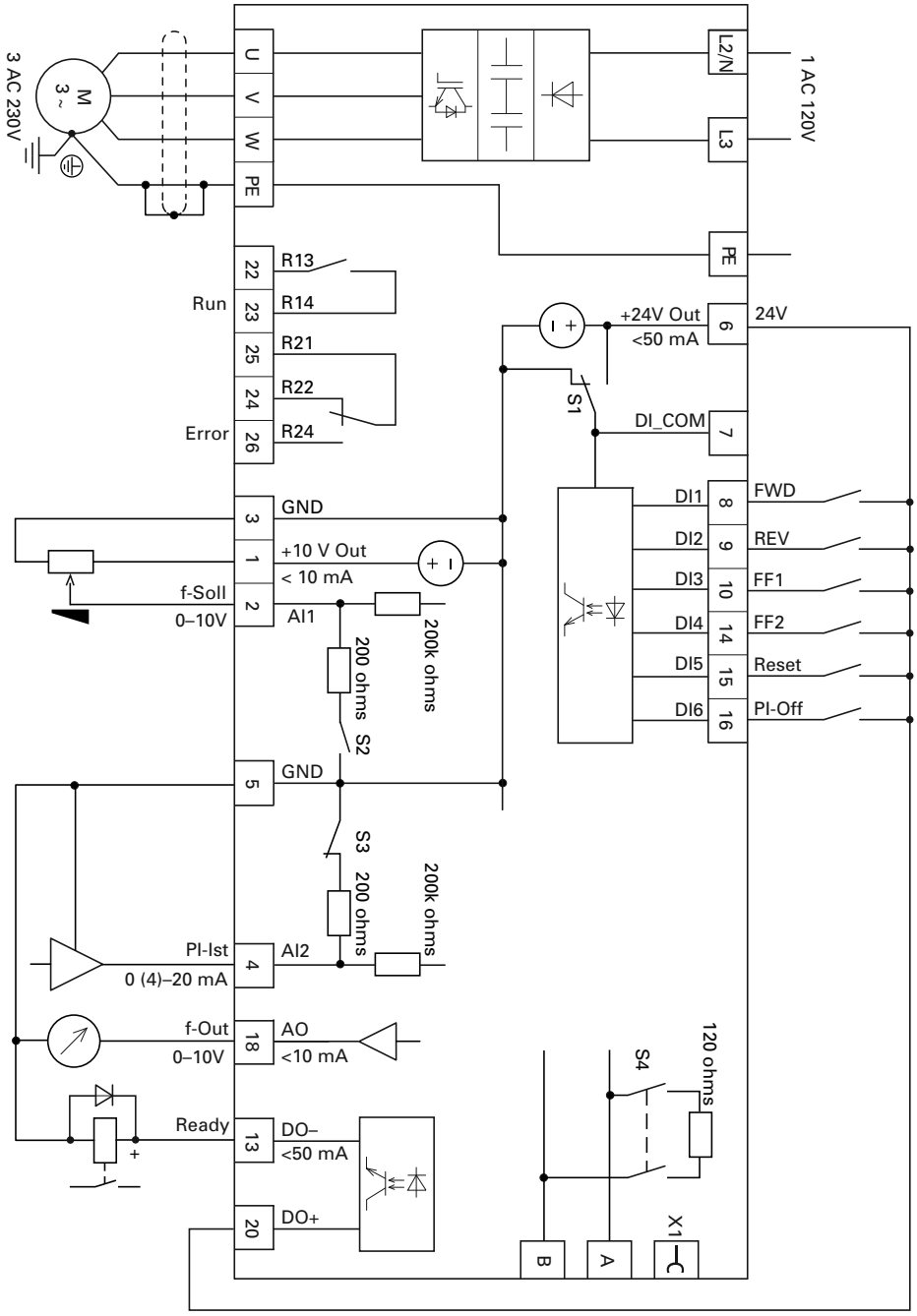

MMX12...F_ Block Diagram

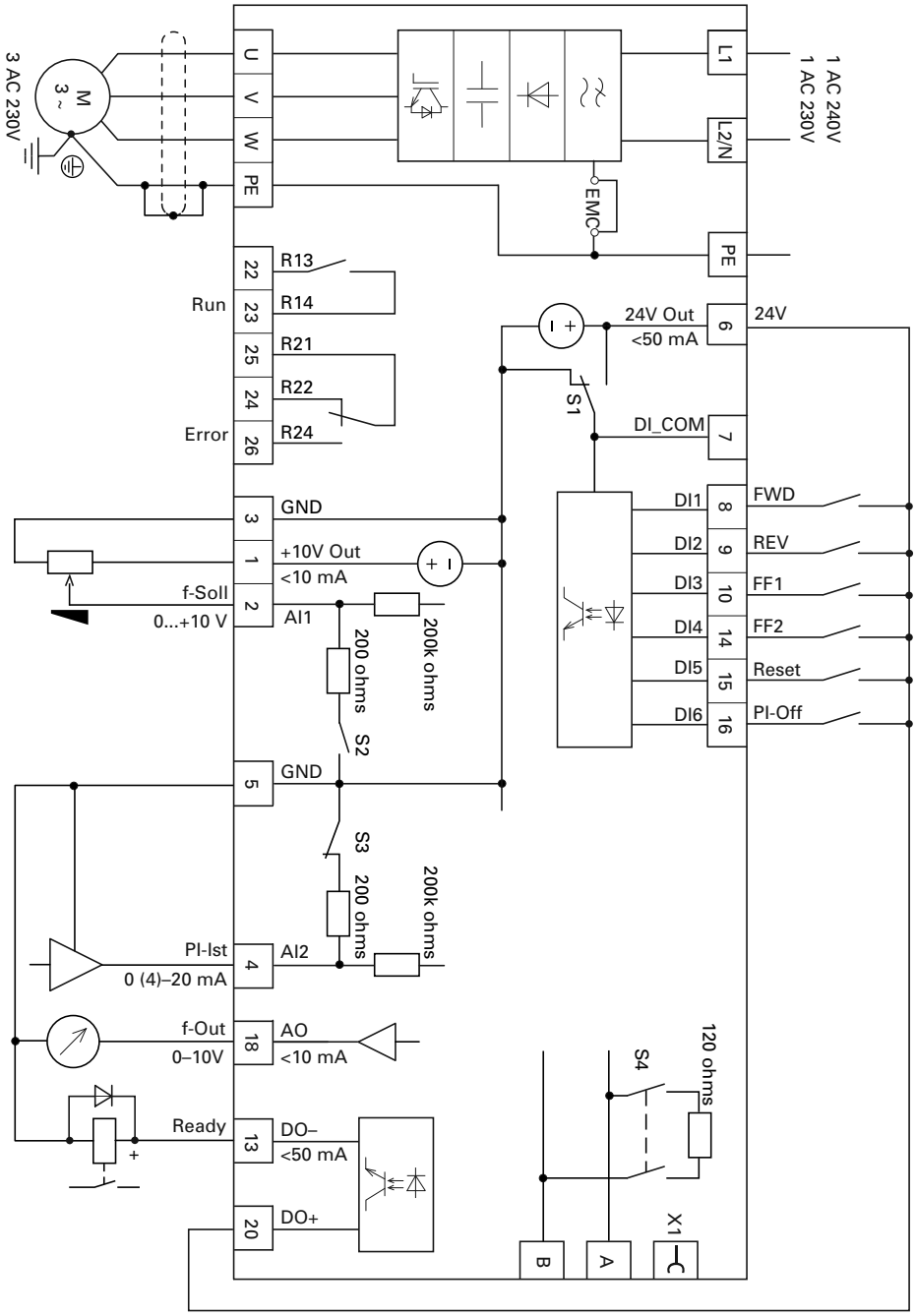

MMX32, MMX34 and MMX35 Block Diagram

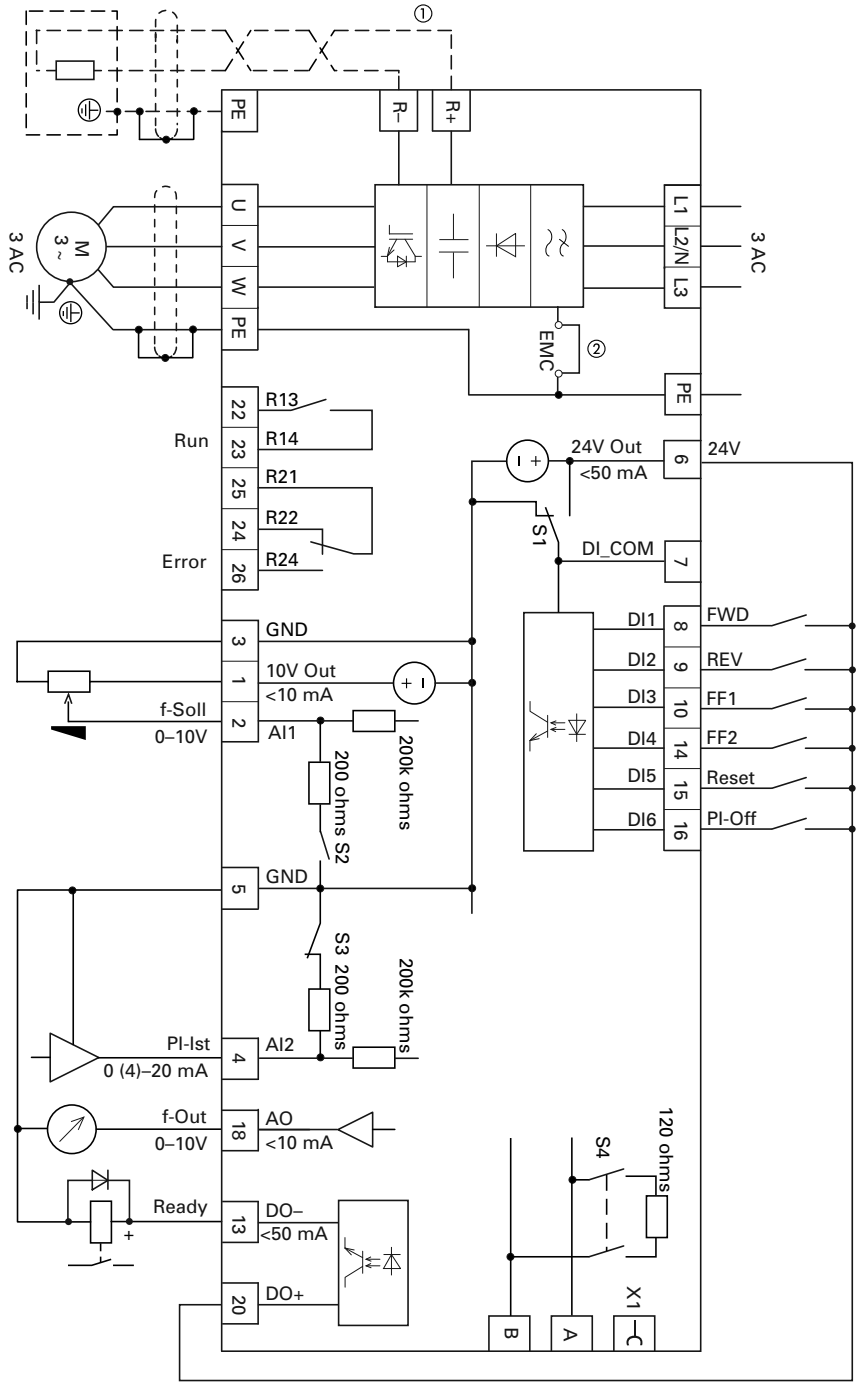

Notes

① External brake resistor terminals R+ and R– are only available on three-phase FS2 and FS3 drives.

② EMC filter only available on MMX34… units.

Insulation Testing

The M-Max series frequency inverters are tested, delivered and require no additional testing.

WARNING

On the control signal and the connection terminals of the frequency inverter, no leakage resistance tests are to be performed with an insulation tester.

WARNING

Wait at least 5 minutes after switching the supply voltage off before you disconnect a connection on the connection terminals (L1, L2/N, L3, U/T1, V/T2, W/T3, R+, R–) of the frequency inverter.

If insulation testing is required in the power circuit of the PDS, you must consider the following measures.

Testing the Motor Cable Insulation

Disconnect the motor cable from connection terminals U/T1, V/T2 and W/T3 of the frequency inverter and from the motor (U, V, W). Measure the insulation resistance of the motor cable between the individual phase conductors and between the phase conductor and the protective conductor.

The insulation resistance must be greater than 1M ohm.

Testing the Input Cable Insulation

Disconnect the power cable from the input supply network and from connection terminals L1, L2/N and L3 of the frequency inverter. Measure the insulation resistance of the input cable between the individual phase conductors and between each phase conductor and the protective conductor.

The insulation resistance must be greater than 1M ohm.

Testing the Motor Insulation

Disconnect the motor cable from the motor (U, V, W) and open the bridge circuits (star or delta) in the motor terminal box. Measure the insulation resistance of the individual motor windings. The measurement voltage must at least match the rated voltage of the motor but is not to exceed 1000V.

The insulation resistance must be greater than 1M ohm.

Consider the information from the motor manufacturer in testing the insulation resistance.

Operation

Commissioning Checklist

Before placing the frequency converter into operation, make sure to check the following:

No.	Activity	Completed	Notes
1	Installation and wiring have been carried out in accordance with the corresponding instructional leaflet (AWA8230-2416)	☐	
2	All wiring and line section leftovers, as well as all the tools used, have been removed from the frequency inverter's proximity	☐	
3	All terminals in the power section and in the control section were tightened with the specified torque	☐	
4	The lines connected to the output terminals of the frequency inverter (U/T1, V/T2, W/T3, R+, R–) are **not** short-circuited and are **not** connected to ground (PE)	☐	
5	The frequency inverter has been earthed properly (PE)	☐	
6	All electrical terminals in the power section (L1, L2/N, L3, U/T1, V/T2, W/T3, R+, R–, PE) were implemented properly and were designed in line with the corresponding requirements	☐	
7	Each single phase of the supply voltage (L1, L2, L3) is protected with disconnect device	☐	
8	The frequency inverter and the motor are adapted to the input voltage (see "Nameplate Rating Data"on **Page 6**, connection type [star, delta] of the motor tested)	☐	
9	The quality and volume of cooling air are in line with the environmental conditions required for the frequency inverter and the motor	☐	
10	All connected control lines comply with the corresponding stop conditions (for example, switch in OFF position and setpoint value = zero)	☐	
11	The parameters that were preset at the factory have been checked with the list of parameters (see "List of Parameters" on **Page 161**)	☐	
12	The effective direction of a coupled machine will allow the motor to start	☐	
13	All emergency switching off functions and safety functions are in an appropriate condition	☐	

Operational Hazard Warnings

Observe the following Warnings and Cautions.

WARNING

Commissioning is only to be completed by qualified technicians.

WARNING

Hazardous voltage!

The safety instructions on Page x must be followed.

WARNING

The components in the frequency inverter's power section are energized if the supply voltage (line voltage) is connected. For instance: power terminals L1, L2/N, L3, R+, R–, U/T1, V/T2, W/T3.

The control signal terminals are isolated from the line power potential.

There can be a dangerous voltage on the relay terminals (22 to 26) even if the frequency inverter is not being supplied with line voltage (for example, integration of relay contacts in control systems with 230 Vac).

WARNING

The components in the frequency inverter's power section remain energized up to five (5) minutes after the supply voltage has been switched off (intermediate circuit capacitor discharging time).

Pay attention to hazard warnings!

DANGER
5 MIN

WARNING

Following a shutdown (fault, line voltage off), the motor can start automatically (when the supply voltage is switched back on) if the automatic restart function has been enabled.

(See parameter "P6.13".)

CAUTION

Debounced inputs may not be used in the safety circuit diagram.

Any contactors and switching devices on the power side are not to be opened during motor operation. Inching operation using the power switch is not permitted.

Contactors and switching devices (repair and maintenance switches) on the motor side must never be opened while the motor is in operation when the frequency inverter is set to speed control operating mode (P11.8 = 1).

Inching operation of the motor with contactors and switching devices in the output of the frequency inverter is not permitted.

CAUTION

Debounced inputs may not be used in the safety circuit diagram.

Make sure that there is no danger in starting the motor. Disconnect the driven machine if there is a danger in an incorrect operational status.

Note: The START button is only functional if the KEYPAD operating mode is activated.

The STOP button is active in all operating modes. It can be deactivated with parameter (P6.16 = 0).

Note: Operating ranges must be approved by the motor manufacturer if motors are to be operated with frequencies higher than the standard 50 or 60 Hz, otherwise the motors could be damaged.

Commissioning with Control Signal Terminals (Factory Setting)

M-Max frequency inverters are set in the factory and can be started directly via the control signal terminals by connecting the motor outputs allocated for the input voltage (see connection example below).

You can skip this section if you want to set up the parameters directly for optimal operation of the frequency inverter based on the motor data (rating plate) and the application.

The following shows a simplified connecting example of a connection with default settings.

Circuit Example

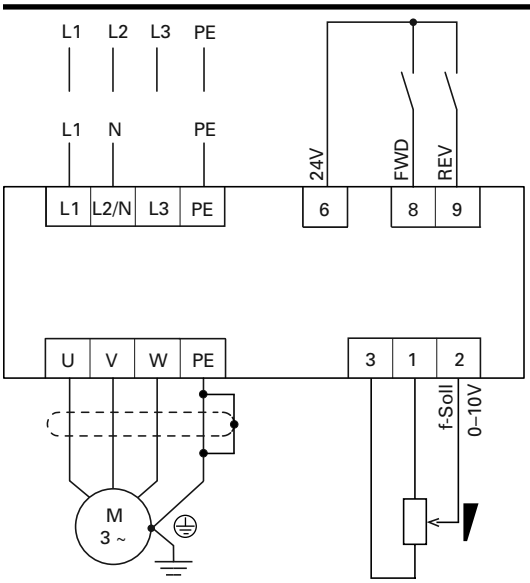

Terminal	Designation		
L1	Single-phase input connection (MMX12)	—	Three-phase input connection (MMX32, MMX34)
L2/N		Single-phase input connection (MMX11)	
L3	—		
PE	Ground connection		
6	Control voltage +24V (output, maximum 50 mA)		
8	FWD, start release clockwise rotating field		
9	REV, start release left rotating field		
U	Connection for three-phase AC motor (three-phase motor)		
V			
W			
PE			
3	Reference potential GND (0V)		
1	Setpoint value voltage +10V (output, maximum 10 mA)		
2	Frequency setpoint f-Set (input 0–10V)		

Connect the frequency inverter according to the connection example for simple commissioning with the specified default settings (see connecting example above).

If the connections for the setpoint value potentiometer cannot be clearly allocated with terminals 1, 2 and 3, you should set the potentiometer to about 50% before giving the start release (FWD/REV) for the first time.

When the specified power supply is applied to connection terminal L2/N and L3 (MMX11) or L1 and L2/N (MMX12) or L1, L2/N and L3 (MMX32, MMX34, MMX35), the LCD display lights up and all segments are displayed briefly.

The frequency inverter runs a self-test automatically when the power is applied.

The arrows (▲) in the top status line of the LCD display show the operating status:

- READY = proper operating status
- STOP = stop (no start command)

The arrows (▼) in the bottom status line show the controller commands. Actuation is done via the control signal terminals (I/O = Control Input/Output) in the factory setting.

The FWD mark (forward) designates the basic rotational direction (phase sequence for a clockwise rotating field) on connection terminals U/T1, V/T2 and W/T3.

The operating data of the output frequency is shown in the LCD display in alternating sequence with M1.1 and 0.00 Hz. The arrow ◀ in the left-hand status line indicates menu level MON (Monitor = operating data display).

Operational Data Indicator (Operational)

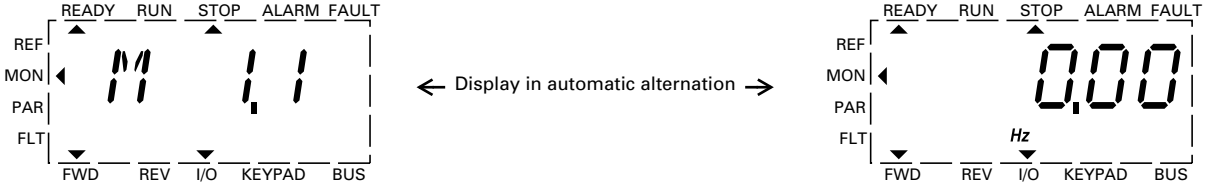

By actuating the OK button, you can set the display mode to stay on the value for the output frequency (0.00 Hz).

The start release is done by actuating one of the digital inputs with +24V:

- Terminal 8: FWD = Clockwise rotating field (Forward Run)
- Terminal 9: REV = Counterclockwise rotating field (Reverse Run)

The control commands are interlocked (exclusive OR) and require a rising voltage edge.

The start release (FWD, REV) is shown in the top status line (LCD display) by the arrow (▲) switching from STOP to RUN.

The frequency is shown with a minus sign with a start release with a left rotating field (REV).

The stop command can also be given via the STOP button on the operating unit. The STOP button is active in all operating modes. It can be disabled with parameter (P6.16 = 0).

A controlled run-down can be set using parameter P6.8 (STOP function) (P6.8 = 1).

The relevant deceleration time is set in parameter P6.6. The acceleration time are set in parameter P6.5.

Information on settings and the description of the parameters used here are provided in "Drives Control (P6)" on **Page 82**.

Operation (RUN) via Control Signal Terminal (I/O) with Left Rotating Field (REV) (for example, –12.34 Hz)

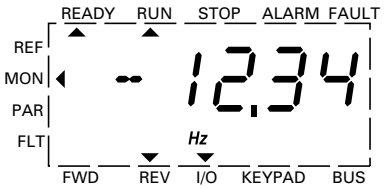

You can now set the output frequency (0–60 Hz) and therefore the speed of the connected AC motor (0–n_{motor}) with the setpoint value potentiometer via terminal 2 (proportional voltage signal 0–10V). The change in output frequency here is delayed based on the specified acceleration and deceleration ramps. In the factory settings, these times are set to 3 seconds.

The acceleration and deceleration ramps specify the time change for the output frequency: from zero to f_{max} (FS = 60 Hz) or from f_{max} back to zero.

The figure on **Page 54** shows a good example of the process, if the release signal (FWD/REV) is switched on and the maximum setpoint voltage (+10V) is applied. The speed of the motor follows the output frequency depending on the load and moment of inertia (slip), from zero to n_{max}.

If the release signal (FWD, REV) is switched off during operation, the inverter is blocked immediately (STOP). The motor comes to an uncontrolled stop (see **[1]** in the figure on **Page 54**).

Start-Stop Command with Maximum Setpoint Value Voltage, Acceleration Ramp 3s

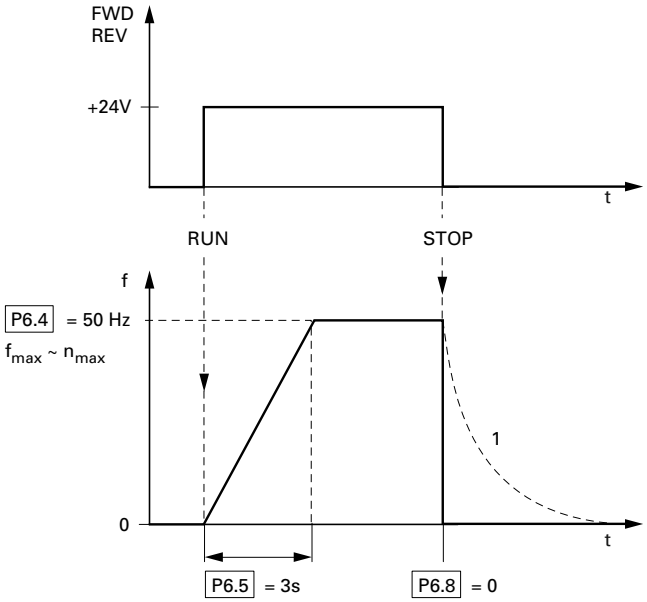

As an alternative (OR) to operation via control signal terminals, you can also operate the frequency inverter without connecting the control signal terminals by simply switching the control level and the setpoint value input.

LOC/REM button
LOC = local, keypad (KEYPAD)
REM = remote (I/0, BUS)

The following brief instructions indicate the required steps.

Brief Instructions

The brief instructions (see the figure on **Page 55**) provide a graphical description of the few steps necessary up to the motor start.

- The frequency inverter carries out a self-test when the supply voltage is applied. The backlight of the LCD display is switched on and all segments are briefly actuated

When the MMX is switched on for the first time, it activates the Quickstart Wizard to guide you step-by-step through the drive parameters (alternating display of P1.1 = 1).

First read "Parameters" starting on **Page 60**.

You can access the parameters when P1.1 = 0. Pressing [BACK/RESET] [∧] [OK] leads you to the operating data display MON. This is always displayed after the power supply is switched off.

The frequency inverter is ready to start when there is an alternating display M1.1 ⟷ 0.00 Hz.

Pressing the OK button allows you to change the alternating mode of the displayed value M1.1.

- The frequency inverter is now ready for operation, and is factory set for activation and frequency setting via the control signal terminals (I/0). The STOP button is active in this mode

The KEYPAD control level can be activated via the LOC/REM button. The menu level (◀) moves to REF and the displayed value switches to 0.00 Hz (default settings).

Pressing the OK button activates the setpoint entry. The right-hand digit of the displayed 0.00 Hz flashes.

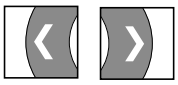

Use these two arrow buttons to select the entry digit (cursor).

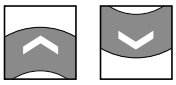

Use these two arrow buttons to change the frequency values (frequency set value).

Changes are only possible when there is flashing at the entry digit (press OK button).

Press the START button to start (RUN) the drive in the selected direction (default settings FWD).

- The direction can be changed via the two arrow buttons (< or >, cursor)
- The drive is factory set to stop at 0 Hz and can then be run in the opposite direction by pressing the START button. Parameter P6.14 = 0 must be set in order to change direction without a stop

In the default settings, the STOP button is active in all operating modes.

The STOP function can be set via P6.8:

- Free coasting
- Deceleration ramp

Brief Instructions: Steps to the Motor Start

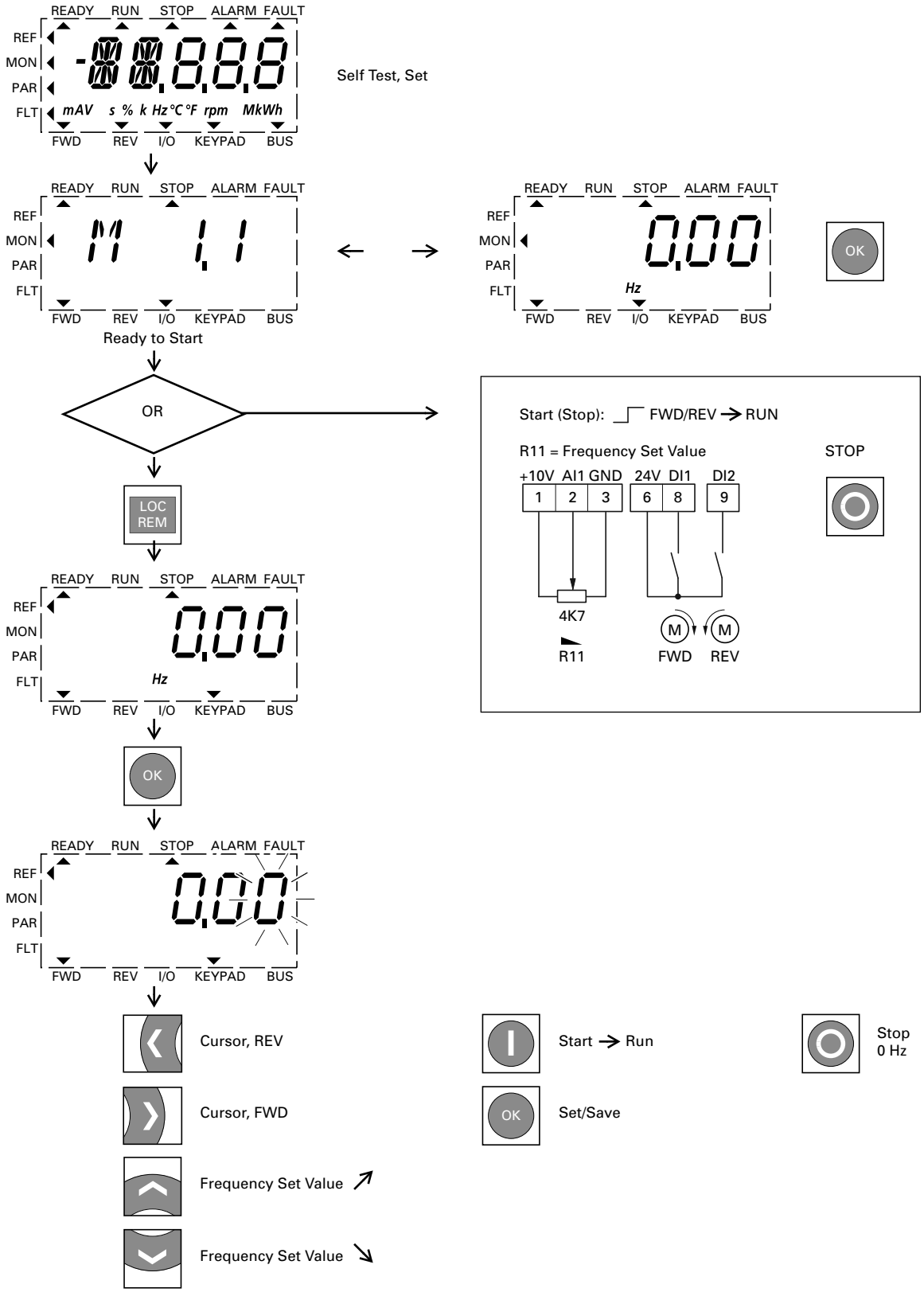

Error and Warning Messages

Introduction

M-Max frequency inverters have several internal monitoring functions. When deviations from the correct operating status are detected, faults (FAULT) and warning messages (ALARM) are differentiated between.

Error Messages

Faults can cause defective functionality and technical defects. The inverter (frequency inverter output) is automatically disabled if a fault is detected. After this, the connected motor comes to a stop freely.

Error messages are shown on the display with an arrowhead ▲ under FAULT and with the error code F… (F1 = last fault, F2 = second to last, and so on).

Example of an Error Message (Undervoltage)

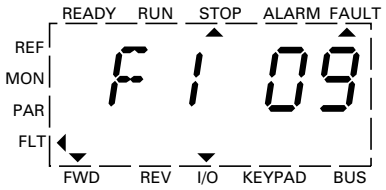

Acknowledge Fault Message (Reset)

The current error message flashes (for example, F1 09). It can be acknowledged by pressing the OK button followed by BACK/RESET or by actuating DI5 (default settings control signal terminal 15). The displayed error then automatically stops flashing, the four horizontal bars (Reset) are shown and the error message is then displayed continuously. The arrow point ▲ underneath FAULT disappears.

⚠ WARNING

If a start signal is present, the drive is restarted automatically, if P3.1 = 0 is set (REAF = Restart after FAULT) and the error message has been acknowledged (Reset).

The current fault message indication (F1...) is cleared when the supply voltage is interrupted or when you press the OK button followed by BACK/RESET. The indication goes out and the arrow tip ◀ flashes at menu level MON.

Fault Log (FLT)

The last nine faults can be called up and shown in succession in the fault log (FLT).

Select the FLT menu level (◀). Use the arrow buttons ∧ and ∨ to call the faults F1–F9 individually. Every error message is stored with the time of the error occurrence under d (day), H (hour) and m (minute). The call is made with the OK button, and the selection with the ∧ and ∨ arrow buttons.

The content of the error memory is cleared when the factory setting is activated. When you press the BACK/RESET button, the display of the menu level (◀) flashes and the STOP button is held down for around 5 seconds.

Activating the factory settings will reset all parameters.

Alarm Messages

A warning message signals possible damage and indicates impending errors that can still be prevented, such as an excessively high temperature rise.

Warning messages appear on the display with an arrow ▲ under ALARM and AL with the respective code number. The code numbers for faults and warning messages are identical.

Example of an Alarm Message

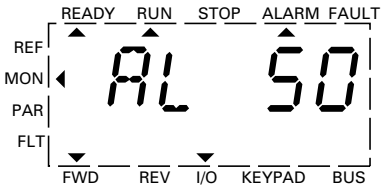

If a warning message occurs, the frequency inverter remains active (READY, RUN).

In the given example (AL 50 = current setpoint signal 4–20 mA interrupted), the drive stops following the absence of a reference value. If no more measures are introduced because of the warning message (for example, a shutdown), the drive can start again automatically in the example AL 50 when the current signal returns (for example, a contact fault in the signal line).

The alarm message (AL) is displayed alternating with the active operational display value.

The table on **Page 57** shows the error codes, their possible causes, and indicates correction measures.

List of Fault Messages (F) and Warning Messages (AL)

Display	Designation	Possible Cause	Instructions
01	Overcurrent	The frequency inverter has detected an excessive current (> 4 x I_N) in the motor cable Sudden load increase Short circuit in motor cable Inadequate motor	Check the load Check the motor size Check the cable (See parameter P6.6)
02	Overvoltage	The DC intermediate circuit voltage has exceeded the internal safety limit The delay time is too short High overvoltage peaks in line power	Increase braking time
03	Ground fault	An additional leakage current was detected when starting by means of a current measurement Insulation fault in the cables or in the motor	Check the motor cable and the motor
08	System fault	CPU error message Internal communication fault	Reset error: Switch input voltage off and on (restart) ① If the fault occurs again, contact your local representative
09	Undervoltage	The DC intermediate circuit voltage has exceeded the internal safety limit Probable cause: The supply voltage is too low Internal device fault Power failure	If a brief power failure takes place, reset the fault and restart the frequency inverter Check the supply voltage. If it is okay, there is an internal fault If this is the case, contact your local representative
13	Undertemperature	The IGBT switch temperature is below 14°F (–10°C)	Check the ambient temperature
14 ②	Overtemperature	The IGBT switch temperature is above 248°F (120°C) An excessive temperature warning is issued if the IGBT switch temperature goes above 230°F (110°C)	Make sure that there is an unobstructed flow of cooling air Check the ambient temperature Make sure that the switching frequency is not too high in relation to the ambient temperature and to the motor load
15	Motor stalled	The motor blocking protection mechanism has been triggered	Check the motor
16	Motor overtemperature	The frequency inverter's motor temperature model has detected motor overheating. The motor is overloaded	Decrease the motor load If the motor is not overloaded, check the temperature model parameter
17	Motor underload	Motor idle, connection to load machine interrupted (for example, torn drive belt)	This function must be activated at P8.5. The overload message is set at P8.12 and P8.13
22	EEPROM checksum error	Error when storing parameters Malfunction Component fault Error in microprocessor monitoring	Contact your local Eaton representative
25	Watchdog (API)	Error in microprocessor monitoring Malfunction Component fault	Reset the fault and restart If the fault occurs again, contact your local representative
27	Back EMF	Electromotive force The voltage induced in the motor with the rotation is greater than the output voltage of the frequency inverter	The rotation energy is greater than the braking energy Lengthen deceleration times Switch on brake chopper and braking resistor Use higher rated frequency inverters
35	Application error	The application is not working	Contact your local Eaton representative
41	IGBT overtemp	The IGBT switch temperature is above 248°F (120°C) An excessive temperature warning is issued if the IGBT switch temperature goes above 230°F (110°C)	Make sure that there is an unobstructed flow of cooling air Check the ambient temperature Make sure that the switching frequency is not too high in relation to the ambient temperature and to the motor load

Notes

① There are subcodes associated with this error. To get the subcode scroll to the M (minute) value within the fault menu. The value listed is the subcode.

② Power software ≦V018 IGBT overtemperature. Power software ≧V019 heat sink overtemperature.

List of Fault Messages (F) and Warning Messages (AL), continued

Display	Designation	Possible Cause	Instructions
50	Live zero error (analog input)	Monitored zero point Current less than 4 mA, voltage less than 2V Signal cable interrupted The signal source is faulty	Check the analog setpoint circuit and current and voltage source (see parameter P2.1, P2.5, P8.1, P8.10)
51	External fault	Error message at a digital input (DI1–DI6), programmed as input for an external error message	Check the programming (P3.5, P3.6) and check the device indicated by the error message Check the cabling for the respective device as well
53	Fieldbus error	The communication link between the master device and the drive's fieldbus has been interrupted	Check the installation Further notes are provided in the manual of the optional fieldbus interface (CANopen, PROFIBUS DP, and so on) If the installation is okay, contact your local representative
54	Fieldbus interface error	MMX-NET-XA mounting frame for fieldbus interface cards is not connected to the frequency inverter Optional fieldbus interface is not fitted	Error message with activated fieldbus connection of the interface between the frequency inverter and the mounting frame (MMX-NET-XA) Error message as per P8.15 Further notes are provided in the optional fieldbus interface manual (CANopen, PROFIBUS DP, and so on)

Acknowledge Fault (Reset)

By switching the supply voltage off, the error message (F, FAULT) is acknowledged and reset. The error code with the respective operating times (d = days, H = hours, M = minutes) remains stored (FLT).

In the factory setting, you can also acknowledge the error with a 24 Vdc signal on terminal 15 (DI5 = Reset). The error code is not deleted in this case.

The following table shows the required operations for acknowledging an error message via the operating unit.

Error Messages via Operating Unit

Operating Unit Element	Explanation
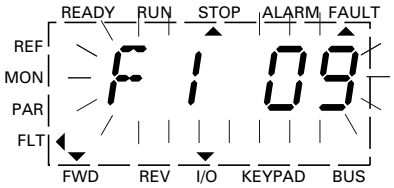	F1 = Current fault message (flashing display) 09 = Undervoltage (example)
  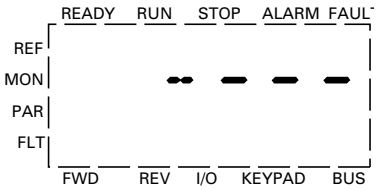 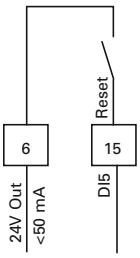	Actuate the BACK/RESET button or terminal DI5 (reset) to acknowledge the error message
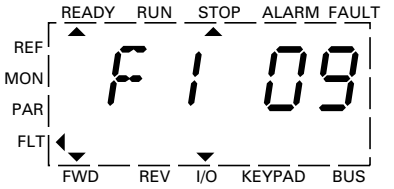	The acknowledged fault message is displayed with READY and the failure code
  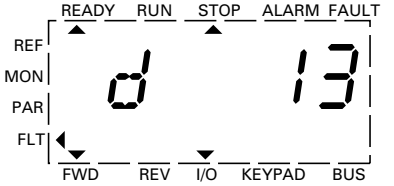	By actuating the OK button, the number of operating days (for example, d = 13 days) until this fault message is displayed You can also show the respective hours (H) and minutes (M) of operation with the arrow button ∨
	You exit the fault log (FLT) with the BACK/RESET button The ◀ arrow moves to MON in the menu level
	Use the OK button to activate the operating data display now or select another menu level with the arrow keys ∧ or ∨

Parameters

Control Unit

The following figure shows the elements of the M-Max's integrated control unit.

View of the Keypad with LCD Display, Function Keys and Interface (LCD = Liquid Crystal Display)

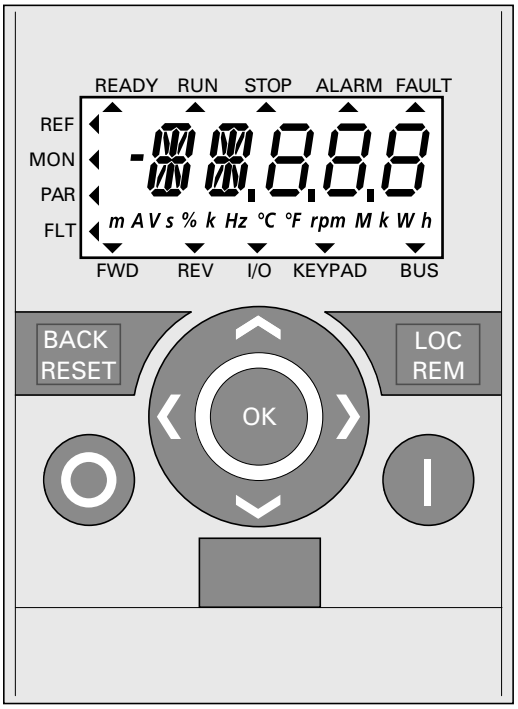

Control Unit Elements

Operating Unit Element	Explanation
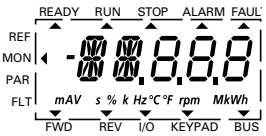	Backlit liquid crystal display (LCD) Plain text with alphanumeric characters
	Acknowledge fault message (Reset) Activates the selection for the menu levels (◀ flashes)
	Move between different control levels (I/O–KEYPAD–BUS) according to parameter settings P6.1 and P6.17
	Select function and parameter Increase numerical value
	Confirm and activate selection (store) Lock display
	Select function and parameter Reduce numerical value
 	Move to the individual parameter groups (… S4.1–P1.1–P2.1–P3.1 …) In displays with several digits, move between the individual digits (cursor) Direction reversal (FWD ⟷ REV) in KEYPAD mode
	Stops the running motor (P6.16) Reset: Holding down the button for 5 seconds causes the default settings to be loaded. All parameters are reset and the fault memory (FLT) is cleared
	Motor start with selected direction of rotation (only active in KEYPAD control level)
	Interface for communication (Option: MMX-COM-PC)

Pressing the arrow buttons increases or decreases the active value, the parameter, or function by one unit. Holding down an arrow button makes the change automatically.

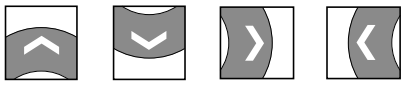

Display Unit

The following shows the display unit (LCD display with all display elements).

LCD Display (Areas)

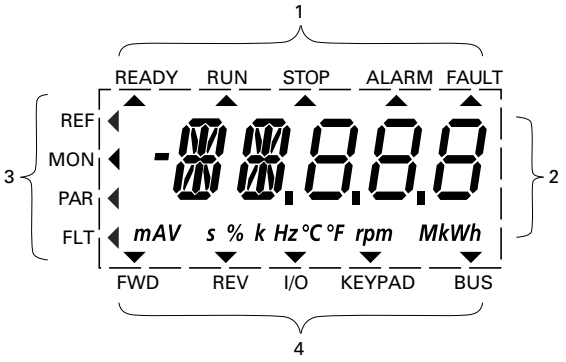

The display unit consists of a backlit liquid crystal display (LCD). It is divided into four areas.

Areas of the LCD Display

Area		Description
1	Status indicator	The arrowheads (▲) on the top border show information regarding the drive: READY = Ready to start RUN = Operating notification STOP = Stop, stop command activated ALARM = Alarm message activated FAULT = The drive has been stopped due to an error message
2	Plain text display	Two 14- and three 7-segment blocks for displaying: AL = Alarm message F = Error messages M = Measurement value (operating data) P = Parameter numbers S = System parameter - = Anticlockwise field of rotation (REV) The respective units of measurement are displayed in the bottom line
3	Menu level	The arrow ◀ shows the selected main menu: REF = Reference value input (reference) MON = Operational data indicator (monitor) PAR = Parameter levels FLT = Fault log (Fault)
4	Control commands	The arrowhead ▼ points to the selected rotating field direction and the active control level: FWD = Clockwise rotating field (forward run) REV = Counterclockwise rotating field (reverse run) I/O = Via control terminals (input/output) KEYPAD = Via control unit BUS = Via fieldbus (interface)

General Information on Menu Navigation

By applying the specified supply voltage to the connection terminals L2/N and L3 (MMX11), L1 and L2/N (MMX12) or L1, L2/N and L3 (MMX32, MMX34), the frequency inverter automatically runs the following functions:

- The lighting of the LCD display is switched on and all segments are actuated briefly
- After the self-test, the top status line of the LCD display indicates that the device is ready to start and proper operation by an arrow ▲ under READY. The arrow under STOP indicates that there is no start command (FWD or REV)
- The arrow ▼ in the bottom status line shows the actuation via control signal terminals with the factory setting on I/O Control (Control Input/Output). The arrow over FWD (Forward) indicates the basic rotational direction (phase sequence for a clockwise rotating field) on the output terminals U/T1, V/T2 and W/T3)
- Display for the operating data M1.1 and 0.00 Hz (output frequency) in automatic alternating sequence. The arrow ◀ in the left-hand status line indicates menu level MON (Monitor = Operating data display)

Operational Data Indicator (Operational)

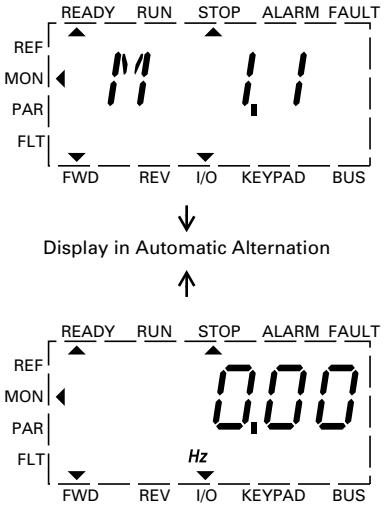

By actuating the OK button, you can set the alternating display mode to stay on the output frequency (0.00 Hz).

The frequency inverter is ready for operation and can be started via the control signal terminal with the specified values from the factory settings when connecting the allocated motor output (see "Commissioning with Control Signal Terminals (Factory Setting)" on **Page 52**).

Setting Parameters

The following table is a good example of the general execution for selecting and setting parameters.

When the MMX is switched on for the first time, it activates the Quickstart Wizard to guide you through specific parameters. (See as per "Step" 2.)

Setting Parameters

Sequence	Commands	Display	Description
0		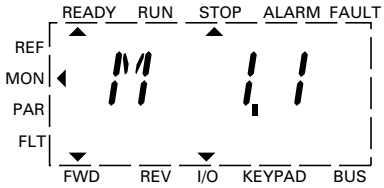	Measured value 1.1 The display changes automatically with the value of the output frequency 0.00 Hz (at STOP)
1		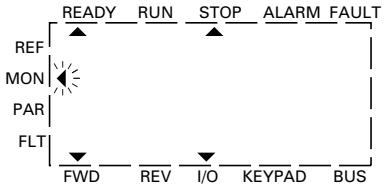	By actuating the BACK/RESET button, you activate the menu level (arrow flashes)
	   		The two arrow buttons enable you to select the individual main menus: REF = Setpoint input (reference) MON = Operational data indicator (monitor) PAR =Parameter levels FLT = Fault log (Fault) Use the OK button to open the selected main menu
2		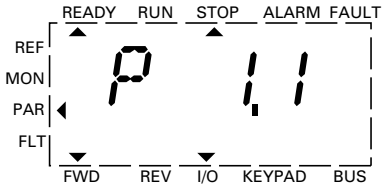 ↓ Display in Automatic Alternation ↑	The numerical first value is always shown from the selected main menu Example: Main menu PAR, Parameter P1.1 The display automatically switches between the parameter number and the defined value P1.1 =1 is displayed at the first switch on and after the factory settings have been activated
		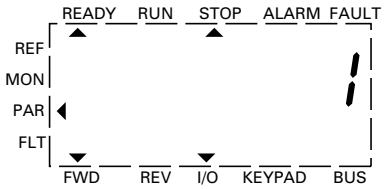	Use the OK button to activate the selected parameter. The value (1) flashes P1.1 =1: The Quickstart Wizard is activated and guides you step-by-step through the specific drive parameters (see **Page 65**)

Setting Parameters, continued

Sequence	Commands	Display	Description
3		READY RUN STOP ALARM FAULT REF MON PAR FLT FWD REV I/O KEYPAD BUS	If the parameter value is flashing, you can use the two arrow keys to change the value within the permitted range P1.1 = You exit the Quickstart Wizard (access to all parameters)
	OK	READY RUN STOP ALARM FAULT REF MON PAR FLT P 1.1 FWD REV I/O KEYPAD BUS	The selected value is confirmed with the OK button The display now changes automatically between the new value and the respective parameter number
4		READY RUN STOP ALARM FAULT REF MON PAR FLT P 2.1 FWD REV I/O KEYPAD BUS	The other parameters in the main menu PAR can be selected with the two arrow buttons (⌃ or ⌄) (closed circuit, Example: Factory setting)
		READY RUN STOP ALARM FAULT REF MON PAR FLT S 4.3 FWD REV I/O KEYPAD BUS	P14.16 P2.1 P1.1 S4.3 S1.1
		READY RUN STOP ALARM FAULT REF MON PAR FLT S 4.1 FWD REV I/O KEYPAD BUS	The arrow buttons (< and >) enable you to select the first parameter of each parameter group > P1.1, P2.1, P3.1, P4.1, … < S4.1, S3.1, S2.1, S1.1, P14.1, …
5	BACK RESET	READY RUN STOP ALARM FAULT REF MON PAR FLT FWD REV I/O KEYPAD BUS	By actuating the BACK/RESET button, you exit main menu PAR (arrow flashes, see sequence 1)

All settings are stored automatically by actuating the OK button.

Parameters marked in the "Access Right RUN" column with ✓, can be changed during operation (RUN mode).

Parameter Menu (PAR)

You have access to all M-Max parameters in the parameter menu (PAR) (see "List of Parameters" on **Page 161**).

Parameter Menu (P1.1 = 1, Quick Configuration)

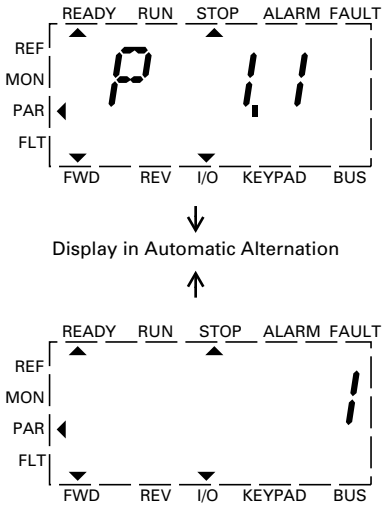

The parameter menu always starts with the parameter P1.1.

P1.1 = 1 means that you are guided through the parameters by the Quickstart Wizard. Here you must confirm a specified number of parameters individually (see **A**).

P1.1 = 0 gives you free access to all parameters (see **B**).

Schematic Representation of Parameter Access

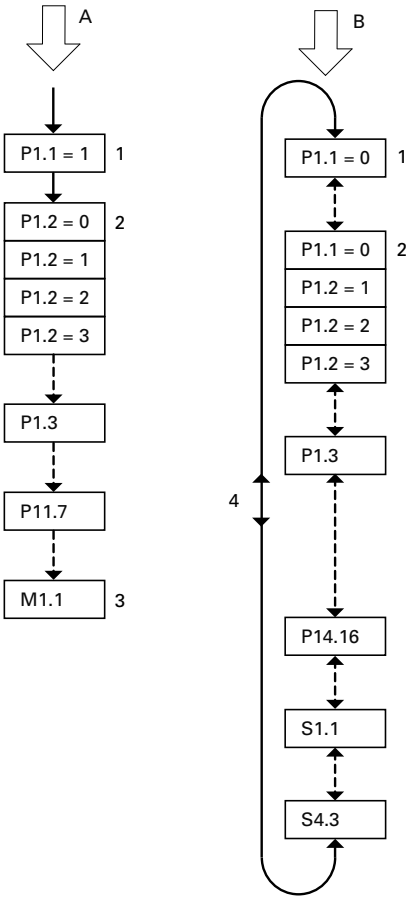

Item Number	Description
A	Guided access and selected parameters with the Quickstart Wizard (use OK button to move further)
B	Free access to all parameters (move further using the four arrow buttons)
1	Parameter conceal selection P1.1 = 1 (Factory setting) The quick start assistant guides you to the selected parameters (predefined parameter change) P1.1 = 0 allows access to all parameters (free parameter selection)
2	Selection of pre-defined parameter values for various applications (see table on **Page 66**) P1.2 = 0: Basic, no preliminary setting P1.2 = 1: Pump drive P1.2 = 2: Fan drive P1.2 = 3: Feed unit (high load)
3	Completion of the quick configuration and automatic switch to frequency display Selecting the PAR menu level again allows the free selection of the required quick configuration parameters and the system parameter (S)
4	Free selection of all parameters (P1.1 = 0) with the two arrow buttons ∧ and ∨ or < and >

Quickstart Wizard

The quick start assistant guides you in the quick configuration through all important settings that have to be made or that you should check for your application (see **A** in figure on **Page 64**). The parameters that are called during the process are listed in the table on **Page 66**, in the "Basic (Standard Drive)" column.

The process is run from parameter to parameter. Returning is not possible here.

In the quick configuration, the OK button activates the individual parameter values and then moves on to the next parameter. Every parameter always shows the value that is set in alternating sequence. By actuating the OK button again, you activate the value (value flashes).

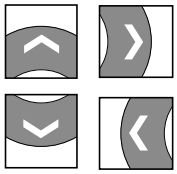

The arrow buttons have restricted functionality (change of parameter values and cursor control) in the quick start configuration.

When the quick configuration is completed, the frequency display M1.1 is activated automatically. Selecting the PAR main menu again enables you to call up the parameters of the quick configuration and then change them freely.

Besides the parameters of the quick configuration, system parameters S1.1 to S4.3 are also shown after the first setting.

P1.1 = 0 activates access to all parameters and the full functionality of all buttons of the keypad (free parameter definition, see **B** in the figure on **Page 64**).

This exits the quick configuration and the guided setup with the quick start assistant.

Quick Start Parameter Guide

The following table shows the preset application parameters of parameter P1.2. in the factory setting.

With P1.1 = 1 you are guided through the drive parameters in steps (Quickstart Wizard) after the power supply is switched on and after the factory settings are activated.

Note: To cancel Quickstart Wizard, or to set parameter not contained in the Quickstart Wizard, set parameter P1.1 = 0.

For detailed explanation of parameters and their options, see the detailed parameters list starting on **Page 67**.

Predefined Application Parameters from Parameter P1.2

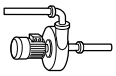

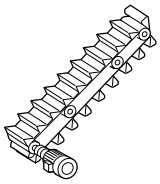

Parameter (PNU)	Basic (Standard Drive)	Pump Drive	Fan Drive	High Load	Designation
P1.1	1 = Only quick configuration parameters	1 = Only quick configuration parameters	1 = Only quick configuration parameters	1 = Only quick configuration parameters	**Quick start parameters**
P1.2	0 = Basic	1 = Pump drive	2 = Fan drive	3 = Hoisting device (high load)	**Application**
P1.3	1 = N/A	1 = N/A	1 = N/A	1 = N/A	**Country specific default settings**
P6.1	1 = Control signal terminals (I/O) (I/O)	1 = Control signal terminals (I/O) (I/O)	1 = Control signal terminals (I/O) (I/O)	1 = Control signal terminals (I/O) (I/O)	**Primary remote control source**
P6.2	3 = AI1 (analog setpoint 1)	3 = AI1 (analog setpoint 1)	3 = AI1 (analog setpoint 1)	3 = AI1 (analog setpoint 1)	**Primary remote speed reference**
P6.3	00.00 Hz	20.00 Hz	20.00 Hz	00.00 Hz	**Minimum frequency**
P6.4	60.00 Hz	60.00 Hz	60.00 Hz	60.00 Hz	**Maximum frequency**
P6.5	3.0s	5.0s	20.0s	1.0s	**Acceleration time (acc1)**
P6.6	3.0s	5.0s	20.0s	1.0s	**Deceleration time (dec1)**
P6.7	0 = Ramp (acceleration)	0 = Ramp (acceleration)	0 = Ramp (acceleration)	0 = Ramp (acceleration)	**Start function**
P6.8	0 = Free coasting	1 = Deceleration time (ramp)	0 = Free coasting	0 = Free coasting	**Stop function**
P7.1	I_e	I_e	I_e	I_e	**Motor, rated current**
P7.3	1720 RPM	1720 RPM	1720 RPM	1720 RPM	**Motor, rated speed (RPM)**
P7.4	0.85	0.85	0.85	0.85	**Motor, power factor (cos φ)**
P7.5	230/460/575V ①	230/460/575V ①	230/460/575V ①	230/460/575V ①	**Motor, rated operating voltage**
P7.6	60 Hz	60 Hz	60 Hz	60 Hz	**Motor, rated frequency**
P11.7	0 = Deactivated	0 = Deactivated	0 = Deactivated	1 = Enabled	**Torque increase**
M1.1	0.00 Hz	0.00 Hz	0.00 Hz	0.00 Hz	**Output frequency (display only)**

Notes

① 230V = MMX11_, MMX12_, MMX32_.
400V = MMX34_, 575V = MMX35_.
This parameter will default based on style of unit.

Default I/O

Designation	Terminal	Function	Parameter
DI1	8	Start Fwd	P3.1, P3.2
DI2	9	Stop/Start Rev	P3.1, P3.3
DI3	10	Fixed Frequency B0 (12 Hz)	P3.9, P10.2
DI4	14	Fixed Frequency B1 (18 Hz)	P3.10. P10.3
DI5	15	Fault Reset	P3.7

Designation	Terminal	Function	Parameter
DI6	16	PID Controller Deactivate	P3.12
RO1 (NO)	22/23	Run	P5.1, P5.10
RO2 (NO/NC)	24/25/26	Fault	P5.2, P5.11
DO	13	Ready	P5.3, P5.9

Parameter Selection (P1)

In the parameter selection (P1), you can choose between the factory set quick configuration (P1.1 = 1) with a reduced parameter set and all parameters (P1.1 = 0).

The setting of the parameters with the quick configuration (P1.1 = 1) is guided by a Quickstart Wizard. (A listing of parameters is on **Page 66**.) Each executed parameter must be processed in succession up to frequency display M1.1.

A return to a previous parameter is not possible here. The preset application parameters are selected under P1.2. Only when the quick start assistant (M1.1) is completed can the parameters be called again and then also individually.

With P1.1 = 0 (all parameters) and P1.2 = 0, 1, 2, or 3, you can link the predefined application values with all parameters.

Every single parameter value is reset to factory settings every time that the application menu is activated.

Parameter Selections

PNU	ID	Access RUN	Value/ Range	Description	Factory Setting (P1.3)
P1.1	115	✓	—	**Quick start parameters**	1
			0	All parameters All parameters are shown and can be changed. Exit from Quickstart.	
			1	Only quick configuration parameters Only the selected parameters of the quick configuration are shown and can be changed (see **Page 66** for list of parameters)	
P1.2	540	X	—	**Application** (See listing of the predefined application parameters in the table on **Page 66**)	0
			0	Basic	
			1	Pump drive	
			2	Fan drive	
			3	High load (for example, hoisting or conveyor)	
P1.3	1472	X	—	**Country specific default settings**	1
			0	EU (Europe, 50 Hz networks)	
			1	NA (North America, 60 Hz networks)	
			—	The country specific factory setting takes into account the frequency based parameters in relation to 50 and 60 Hz networks:	

PNU	Designation	P1.3 = 0	P1.3 = 1
P6.4	Maximum frequency	50 Hz	60 Hz
P7.3	Motor, rated speed	1440 RPM	1720 RPM
P7.6	Motor, rated frequency	50 Hz	60 Hz
P11.2	Cut-off frequency	50 Hz	60 Hz
P11.4	V/Hz characteristic curve, mean frequency value	25 Hz	30 Hz
P14.3	Motor (2PS) nominal speed	1440 RPM	1720 RPM
P14.6	Motor (2PS) nominal frequency	50 Hz	60 Hz
P14.8	Maximum frequency (2PS)	50 Hz	60 Hz

Analog Input (P2)

In parameter group P2, you can adapt the analog inputs:

The signal range depends on the switch position of the microswitches (see figure on this page):

- S2 = V: AI1 (control signal terminal 2), voltage signal 0/2 – +10V
- S3 = mA: AI2 (control signal terminal 4), current signal 0/4 – 20 mA

Reference potential for the analog inputs (AI1, AI2) is GND (control signal terminals 3 and 5).

The allocation of the analog inputs (AI1, AI2) can be set under parameter P6.2 and P6.18 (setpoint input) as well as P9.5 and P9.6 (PI controller, actual value).

Analog Inputs AI1 and AI2

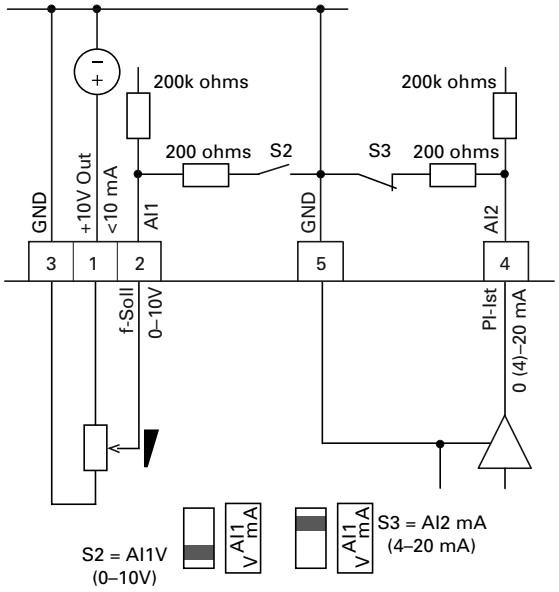

Analog Inputs

PNU	ID	Access RUN	Value/Range	Description	Factory Setting (P1.3)
P2.1	379	✓	—	**AI1 signal range (analog input)**	0
				Depending on the switch position of microswitch S2 (FS = frequency setpoint)	
			0	S2 = V: 0–10V, voltage signal (FS, see P6.2) S2 = mA: 0–20 mA, current signal	
			1	With live-zero, S2 = V: 2–10V, voltage signal S2 = mA: 4–20 mA, current signal At P8.1 it is possible to set the response of the MMX to a setpoint error (life zero)	
P2.2	380	✓	—	**AI1 custom minimum**	0.00
			–100.00% to 100.00%	Scaling of the analog input signal (V/mA) in the zero range (minimum response value) See "Scaled Value Range (AI1, AI2)" on **Page 69**	
P2.3	381	✓	—	**AI1 custom maximum**	100.00
			–100.00% to 100.00%	Scaling of the analog input signal (V/mA) in the limit value range (highest limit value) See "Scaled Value Range (AI1, AI2)" on **Page 69**	
P2.4	378	✓	—	**AI1, filter time**	0.1
			0.0	No filter function	
			0.1–10s	Filter time constant for the analog input signal (V/mA) See"Filter Time Constant" on **Page 70**	

Analog Inputs, continued

PNU	ID	Access RUN	Value/Range	Description	Factory Setting (P1.3)
P2.5	390	✓	—	**AI2 signal range (analog input)**	1
				Depending on the switch position of microswitch S3 (FS = PID controller, actual value)	
			0	S3 = V: 0–10V, voltage signal S3 = mA: 0–20 mA, current signal	
			1	With live-zero, S3 = V: 2–10V, voltage signal S3 = mA: 4–20 mA, current signal (FS, see P9.6) At P8.1 it is possible to set the response of the MMX to a setpoint error (live zero)	
P2.6	391	✓	—	**AI2 custom minimum**	0.00
			Like P2.2	—	
P2.7	392	✓	—	**AI2 custom maximum**	100.00
			Like P2.3	—	
P2.8	389	✓	—	**AI2, filter time**	0.1
			Like P2.4	—	

Scaled Value Range (AI1, AI2)

The following graphs show examples of the curve characteristics of the scaled and non-scaled input signals.

Example A
P2.2 (P2.6) = 30%, P2.3 (P2.7) = 80%

The incoming analog input signal 0–10V (4–20 mA) is used here in the selected range from 30 to 80%. This limited signal range is predefined as 0–100% input signal (AI_{scal}):

- as frequency setpoint value from 0–f_{max} (P6.4)
- as a process variable from 0–100% actual value for the PID controller

Example of Scaled Analog Input Signals

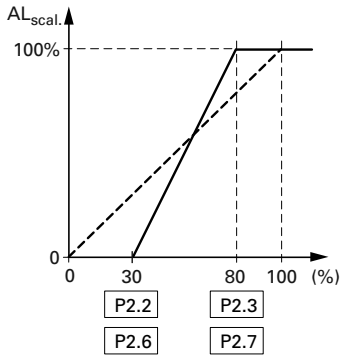

Example B
P2 (P2.6) = –30%, P2.3 (P2.7) = 100%

The incoming analog input signal 0–10V (4–20 mA) is not evaluated in the selected range from 0–30%. In relation to the 30%-signal, a constant offset signal of 23% is predefined in this case. The scaled input signal (AI_{scal}) is therefore 23–100%:

- as frequency setpoint value: 23% f_{max}–f_{max} (P6.4)
- as a process variable: 23–100% actual value for the PID controller

Example of Scaled Analog Input Signals with Offset

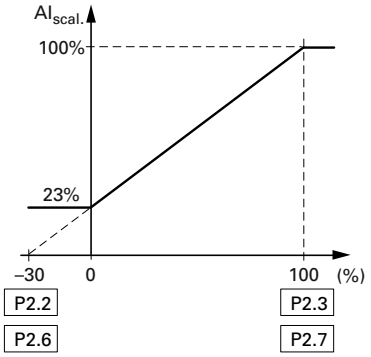

Filter Time Constant

The filter time constant can be used to filter out disturbance with analog signals.

In the default setting the filter time constant is active with 0.1 seconds. The time value set here applies to 63% of the maximum analog signal (+10V, 20 mA).

Long filter times lead to a delay in the analog signal processing.

You can deactivate the filter time constant by setting the parameter to 0.0:

P2.4 (AI1) = Filter time constant, analog input AI1

P2.8 (AI2) = Filter time constant, analog input AI2

P4.4 (AO) = Filter time constant, Analog output AO

Filter Time Constant

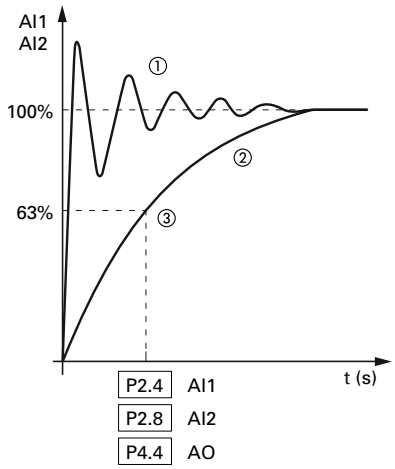

Notes

① Analog signal with faults (unfiltered).
② Filtered analog signal.
③ Filter time constant at 63% of the set value.

Digital Inputs (P3)

The parameter group P3 is used to set the operation and function of the digital inputs DI1 to DI6.

Digital Inputs for Source and Sink Type

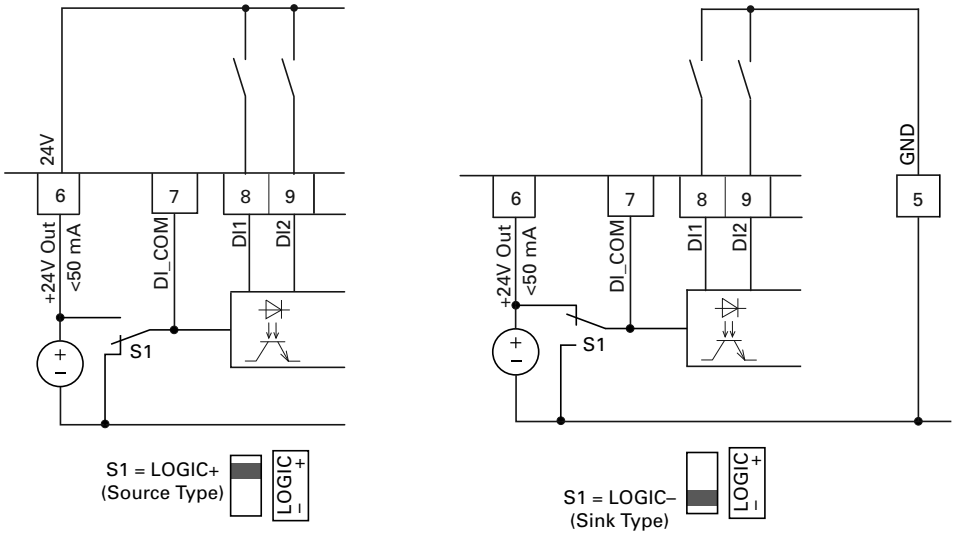

Source type (LOGIC+) = switch at the voltage source. All digital inputs are connected to the voltage sink via microswitch S1 (0V = reference potential GND).

Sink type (LOGIC–) = switch at the voltage sink (0V = reference potential GND). All digital inputs are connected to the voltage source via microswitch S1.

Both switch types ensure failsafe actuation.

Control Logic Reaction to a Rising or Falling Edge (Source Type, Sink Type)

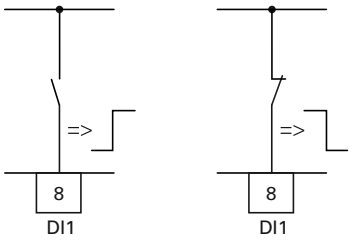

In the factory setting, the operation of the M-Max is active via control signal terminals (I/O) with LOGIC+ (Source type):

- DI1 (control signal terminal 8): FWD (Forward = Start enable clockwise rotating field)
- DI2 (control signal terminal 9): REV (Reverse = Start enable anti-clockwise rotating field)
- DI3 (control signal terminal 10): FF1 (fixed frequency 1 = 10 Hz)
- DI4 (control signal terminal 14): FF2 (fixed frequency 2 = 15 Hz)
- DI5 (control signal terminal 15): Reset (acknowledge error message ALARM)
- DI6 (control signal terminal 16): PID-Off (lock of the PID controller)

The joint actuation of control signal terminal 10 (FF1) and control signal terminal 14 (FF2) activates the fixed frequency FF3 (20 Hz) in the factory setting.

The individual digital inputs (D_) can be assigned several functions. The assigned functions are activated if, with LOGIC+, the control signal terminal is actuated with +24V (rising edge, failsafe).

Digital Inputs

PNU	ID	Access RUN	Value/Range	Description	Factory Setting (P1.3)
P3.1	300	✓	—	**Start/Stop-Logic**	3
			0	P3.2 (FWD), P3.3 (REV), REAF REAF (Restart after Fault) = Restart after an error message Function same as P3.1 = 3 The automatic restart after an error message (FAULT) requires setting P6.13 = 1 The rising edge of the control voltage at control signal terminal 8 (P3.2) or control signal terminal 9 (P3.3) is then not controlled	
			1	P3.2 (FWD) + P3.3 = REV (see Example A on **Page 76**)	
			2	P3.2 (Start pulse), P3.3 (Stop pulse) Start and stop command via the control signal (P3.2 = Start) (P3.3 = Stop) by a momentary pulse (+24V) (see Example B on **Page 76**)	
			3	P3.2 (FWD), P3.3 (REV) P3.2 (control signal terminal 8) starts the drive with a clockwise rotating field (FWD) and P3.3 (control signal terminal 9) with an anticlockwise rotating field (REV). Both control commands are interlocked (exclusive OR)	
P3.2	403	✓	—	**Start signal/Start FWD (1)**	1
			0	Deactivated	
			1	Activated via control signal terminal 8 (DI1)	
			2	Activated via control signal terminal 9 (DI2)	
			3	Activated via control signal terminal 10 (DI3)	
			4	Activated via control signal terminal 14 (DI4)	
			5	Activated via control signal terminal 15 (DI5)	
			6	Activated via control signal terminal 16 (DI6)	
P3.3	404	✓	—	**STOP signal/Start REV(1)**	2
			Like P3.2	Allocation of the function to control signal terminals	
P3.4	412	✓	—	**Reverse (changes the direction of the field of rotation from FWD to REV)**	0
			Like P3.2	Allocation of the function to control signal terminals	
P3.5	405	✓	—	**Ext. fault close (N/O)**	0
			Like 3.2	Allocation of the function to control signal terminals Error message when applying +24V to the assigned control signal terminal (DI1 to DI6)	

Digital Inputs, continued

PNU	ID	Access RUN	Value/Range	Description	Factory Setting (P1.3)
P3.6	406	✓	—	**Ext. fault open (N/C)**	0
			Like P3.2	Allocation of the function to control signal terminals Error message when switching off or interrupting (wire-breakage-safe) the applied control voltage (+24V) from the assigned control signal terminal (DI1 to DI6)	
P3.7	414	✓	—	**Fault reset**	5
			Like P3.2	Allocation of the function to control signal terminals Acknowledges a displayed error message (Reset) when switching on +24V on the assigned control signal terminal (DI1 to DI6)	
P3.8	407	✓	—	**Run enable**	0
			Like P3.2	Allocation of the function to control signal terminals Rotational direction-independent start release when switching on +24V on the assigned control signal terminal (DI1 to DI6)	
P3.9	419	✓	—	**Fixed frequency, binary value B0**	3
			Like P3.2	Allocation of the function to control signal terminals per table below	
P3.10	420	✓	—	**Fixed frequency, binary value B1**	4
			Like P3.2	Allocation of the function to control signal terminals per table below	
P3.11	421	✓	—	**Fixed frequency, binary value B2**	0
			Like P3.2	Allocation of the function to control signal terminals per table below	

The binary connection of three digital inputs enable calling seven fixed frequencies (eight fixed frequencies if parameter P6.2 = 0 is set)

The limitation of the fixed frequencies is done based on parameters P6.3 (minimum frequency) and P6.4 (maximum frequency)

The switch between the individual fixed frequencies is done with the acceleration time and deceleration times in P6.5 and P6.6

Function to Control Signal Terminals

Input (Binary)			Fixed Frequency
B0	B1	B2	(Factory setting)
			FF0, P10.1 = 6 Hz, only if P6.2 = 0
X			FF1, P10.2 = 12 Hz
	X		FF2, P10.3 = 18 Hz
X	X		FF3, P10.4 = 24 Hz
		X	FF4, P10.5 = 30 Hz
X		X	FF5, P10.6 = 36 Hz
	X	X	FF6, P10.7 = 48 Hz
X	X	X	FF7, P10.8 = 60 Hz

Digital Inputs, continued

PNU	ID	Access RUN	Value/Range	Description	Factory Setting (P1.3)
P3.12	1020	✓	—	**PID controller deactivate**	6
			Like P3.2	Allocation of the function to control signal terminals When switching on +24V power, the PID controller is blocked via the assigned control signal terminal (DI1 to DI6)	
P3.13	1400	—	—	**(Not used)**	—
P3.14	1401	✓	—	**External brake, feedback signal (N/O)**	0
			Like P3.2	Assignment of control signal terminal	
P3.15	1402	✓	—	**Change acceleration/deceleration time (acc 2/dec 2)**	0
			Like P3.2	Assignment of control signal terminal Switch acceleration time from acc1 (P6.5) to acc2 (P6.19) Switch deceleration time from dec1 (P6.6) to dec2 (P6.20)	
P3.16	1403	✓	—	**Stop acceleration/deceleration time**	0
			Like P3.2	Assignment of control signal terminal Stops all acceleration (P6.5, P6.19, P14.9) and deceleration times (P6.6, P6.20, P14.10)	
P3.17	1404	✓	—	**Block parameter access**	0
			Like P3.2	Assignment of control signal terminal Blocks access to all parameters **Note:** The resetting of all parameters to the default settings via the STOP button (held down 5s) remains active	
P3.18	1405	✓	—	**Motor potentiometer, increase value** Acceleration time, see "P6.5" (acc1)	0
			Like P3.2	Assignment of control signal terminal	
P3.19	1406	✓	—	**Motor potentiometer, decrease value** Deceleration time, see "P6.6" (dec1)	0
			Like P3.2	Assignment of control signal terminal	
P3.20	1407	✓	—	**Motor potentiometer, set value to zero**	0
			Like P3.2	Assignment of control signal terminal	
P3.21	1408	✓	—	**PLC program start**	0
			Like P3.2	Assignment of control signal terminal	

Digital Inputs, continued

PNU	ID	Access RUN	Value/Range	Description	Factory Setting (P1.3)
P3.22	1409	✓	—	**PLC program pause**	0
			Like P3.2	Assignment of control signal terminal Pause will occur in between steps of the PLC program until control signal is removed	
P3.23	1410	✓	—	**Counter, input signal**	0
			Like P3.2	Assignment of control signal terminal Counts the activation of the selected digital input (DI1–DI6)	
P3.24	1411	✓	—	**Counter, reset**	0
			Like P3.2	Assignment of control signal terminal Resets the outputs P5.1–P5.3 = 20 and/or 21 and display value M1.21 to zero	
P3.25	1412	✓	—	**Activate secondary remote control source**	0
			Like P3.2	Assignment of control signal terminal Move between the control levels set at P6.1 and P6.17 (LOC-REM function)	
P3.26	1413	✓	—	**Activate secondary remote speed reference**	0
			Like P3.2	Assignment of control signal terminal Switch between the setpoint sources AI1 and AI2 set at P6.2 and P6.18	
P3.27	1414	✓	—	**Activate second parameter set (2PS)**	0
			Like P3.2	Assignment of control signal terminal The values set at the parameter group P14 are activated	
P3.28	1415	✓	—	**Fieldbus, remote input**	0
			Like P3.2	Assignment of control signal terminal The assigned digital input is written directly to the general status word (ID 2102, bit 11)	
P3.29	1416	✓	—	**Counter reference value 1**	0
			0–65,535	Trigger value for P5.1–P5.3 = 20	
P3.30	1417	✓	—	**Counter reference value 2**	0
			0–65,535	Trigger value for P5.1–P5.3 = 21	
P3.31	1418	✓	—	**DI1 logic (control signal terminal 8)**	0
				The logic activates the response of the control signal terminal (see figure on **Page 71**)	
				N/O contact (failsafe) N/C contact	
			0	N/O contact	
			1	N/C contact	
P3.32	1419	✓	—	**DI2 logic (control signal terminal 9)**	0
			Like P3.31	Function	

Digital Inputs, continued

PNU	ID	Access RUN	Value/Range	Description	Factory Setting (P1.3)
P3.33	1420	✓	—	**DI3 logic (control signal terminal 10)**	0
			Like P3.31	Function	
P3.34	1421	✓	—	**DI4 logic (control signal terminal 14)**	0
			Like P3.31	Function	
P3.35	1422	✓	—	**DI5 logic (control signal terminal 15)**	0
			Like P3.31	Function	
P3.36	1423	✓	—	**DI6 logic (control signal terminal 16)**	0
			Like P3.31	Function	
P3.37	1480	✓	—	**Manual mode**	0
			Like P3.2	Changes from fieldbus mode (Modbus, CANopen, PROFIBUS, and so on) to manual mode. The control level and setpoint source required in manual mode can be set at parameters P6.31 to P6.33.	

Example A: P3.1 = 1 (P6.8 = 0)

DI1 (FWD) + DI2 = REV

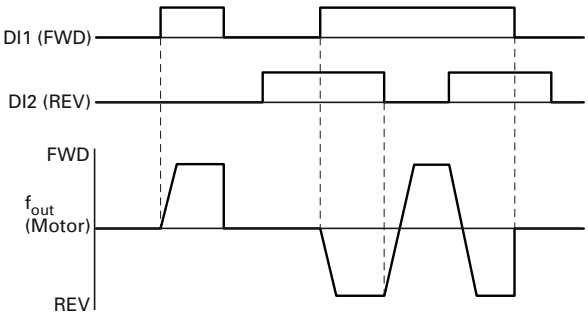

The start enable via control signal terminal 8 (DI1) is always required for operation:

- Actuation control signal terminal 8 (DI1) = Start enable, clockwise rotating field (FWD)
- Actuation control signal terminal 8 (DI1) plus control signal terminal 9 (DI2) = Start enable anticlockwise rotating field (REV)

The separate actuation of control signal terminal 9 (DI2) does not allow any start enable.

Example B: P3.1 = 2

Example: Start Stop Impulse

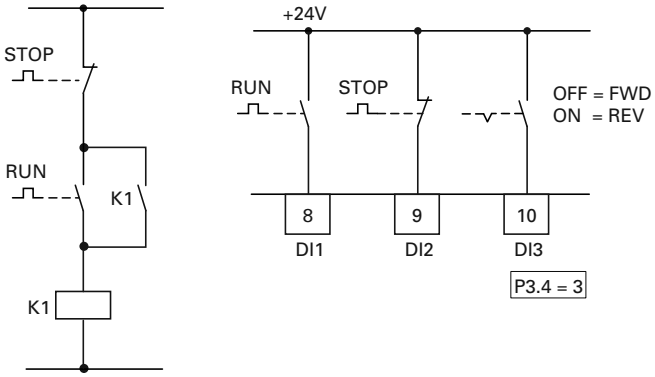

Standard actuation for a drive with pushbutton switch (Normally open, Normally closed) and self-actuating.

Parameter P3.1 = 2 enables this actuation via the control signal terminals 8 (DI1) and 9 (DI2) to be simulated.

Parameter P3.4 = 3 enables the rotation reversal (FWD ⟷ REV) to be activated (reversing starter) via control signal terminal 10 (DI3).

Set P3.9 = 0.

Analog Outputs (P4)

An analog voltage signal from 0–10V is output at control signal terminal 18. The maximum permissible load is 10 mA. Reference potential is GND on control signal terminals 3 and 5.

In the factory setting, the voltage signal (0–10V) is proportional to the output frequency f-Out = 0–f_{max} (P6.4).

The output signal is not monitored by the frequency inverter.

Analog Output AO

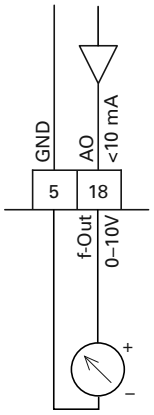

Analog Outputs

PNU	ID	Access RUN	Value/Range	Description	Factory Setting (P1.3)
P4.1	307	✓	—	**AO signal (Analog Output)**	1
			0	Deactivated	
			1	Output frequency f-Out = 0–f_{max} (P6.4)	
			2	Output current I_2 = 0–$I_{N\ Motor}$ (P7.1)	
			3	Torque M_N = 0–100% (calculated value)	
			4	PID controller, output (0–100%)	
P4.2	310	✓	—	**AO, minimum value**	1
			0	0V	
			1	2V (live-zero)	
P4.3	1456	✓	—	**AO, gain**	100.00
			0.00–200.00%	Gain factor The maximum value set here always corresponds to the maximum output voltage 10V	
P4.4	1477	✓	—	**AO, filter time**	0.10
			0.00–10.00s	Filter time constant for the analog output voltage See "Filter Time Constant" on **Page 70**	

Digital Outputs (P5)

The M-Max series frequency inverters have three digital outputs in different specifications:

- Relay RO1: N/O contact R13–R14, control signal terminals 22 and 23
- Relay RO2: changeover contact R21–R22 (N/C contact, control signal terminals 25 and 24)/R21–R24 (N/O contact, control signal terminals 25 and 26)
- Transistor output DO: control signal terminal 13 (DO–). Control signal terminal 20 (DO+) = Input of the supply voltage for the transistor output

Notes on electrical connections are found on **Pages 44** and **45**.

The messages listed under parameter P5.1 can be assigned multiple times. These are independent of the selected control level and operating mode.

Digital Outputs

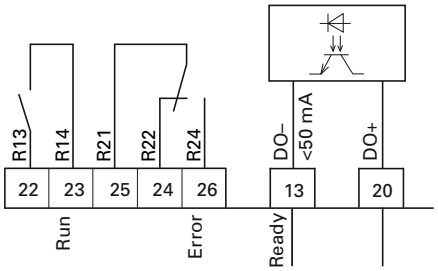

Digital Outputs

PNU	ID	Access RUN	Value/Range	Description	Factory Setting (P1.3)
P5.1	313	✓	—	**RO1 Signal (Relay 1 Output)**	2
			0	Deactivated	
			1	READY, the frequency inverter is ready for operation	
			2	RUN, the inverter of the frequency inverter is enabled (FWD, REV)	
			3	FAULT, error message Error detected (= STOP)	
			4	Error message inverted (no error message)	
			5	ALARM, warning message See "Protective Functions (P8)" on **Page 90**	
			6	REV (Reverse run), anticlockwise rotating field active	
			7	Output frequency = frequency setpoint (at speed)	
			8	Motor controller active	
			9	Zero frequency Output frequency = 0 Hz	
			10	Frequency monitoring 1 For the frequency ranges set at P5.4 and P5.5	
			11	Frequency monitoring 2 For the frequency ranges set at P5.6 and P5.7	
			12	PID monitoring For the deviation set at P9.17	

Values continued on next page

Digital Outputs, continued

PNU	ID	Access RUN	Value/Range	Description	Factory Setting (P1.3)
P5.1	313	✓	13	Overtemperature signal	2
			14	Overcurrent control active	
			15	Overvoltage control active	
			16	PLC sequence control active	
			17	PLC sequence control, single step completed	
			18	PLC sequence control, program cycle completed	
			19	PLC sequence control, pause	
			20	Counter, value 1 reached. The counter value is ≧ the trigger value set at P3.21 and can be reset by activating P3.24	
			21	Counter, value 2 reached. The counter value is ≧ the trigger value set at P3.22 and can be reset by activating P3.24	
			22	RUN message active	
			23	Analog minimum reference error Message if the setpoint signal (life zero) of AI1 and/or AI2 is below 4 mA- or 2V (P2.1 = 1, P2.5 = 1)	
			24	LOG function fulfilled Message if the logical operation of P13.3 is fulfilled (LOG = 1)	
			25	PID controller, actual value monitoring Message if the actual value is within the hysteresis set at P9.15 and P9.16	
			26	External brake actuated Switch threshold: set value of P12.8	
			27	Current monitoring Switch threshold: set value of P5.8	
			28	Fieldbus, remote output The assigned digital output is written directly to the general control word (ID 2001, bit 13)	
P5.2	314	✓	—	**RO2 signal (relay output 2)**	3
			Like P5.1	Assignment of the function	
P5.3	312	✓	—	**DO Signal (Digital Output)**	1
			Like P5.1	Assignment of the function	
P5.4	315	✓	—	**Frequency monitoring 1**	0
				Monitoring of the selected frequency range Actuate output if frequency is below or above Frequency monitoring 1 reference value defined by P5.5. A monitoring message can be implemented via the digital outputs (P5.1, P5.2, P5.3 = 10)	
			0	Deactivated	
			1	0.00–P5.5 Hz frequency is below reference P5.5	
			2	P5.5–P6.4 Hz frequency is above reference P5.5 (P6.4 = maximum frequency)	

Digital Outputs, continued

PNU	ID	Access RUN	Value/Range	Description	Factory Setting (P1.3)
P5.5	316	✓	—	**Frequency monitoring 1 reference value**	0.00
			0.00–P6.4 Hz	P6.4 = maximum frequency	
P5.6	346	✓	—	**Frequency monitoring 2**	0
				Monitoring of the selected frequency range (see P5.5 for explanation) A monitoring message can be implemented via the digital outputs (value 11 = P5.1, P5.2, P5.3)	
			0	Deactivated	
			1	0.00–P5.7 Hz frequency is below reference P5.7	
			2	P5.7–P6.4 Hz frequency is above reference P5.7 (P6.4 = maximum frequency)	
P5.7	347	✓	—	**Frequency monitoring 2 reference value**	0.00
			0.00–P6.4 Hz	P6.4 = maximum frequency	

Frequency Monitoring (P5.5–P5.7)

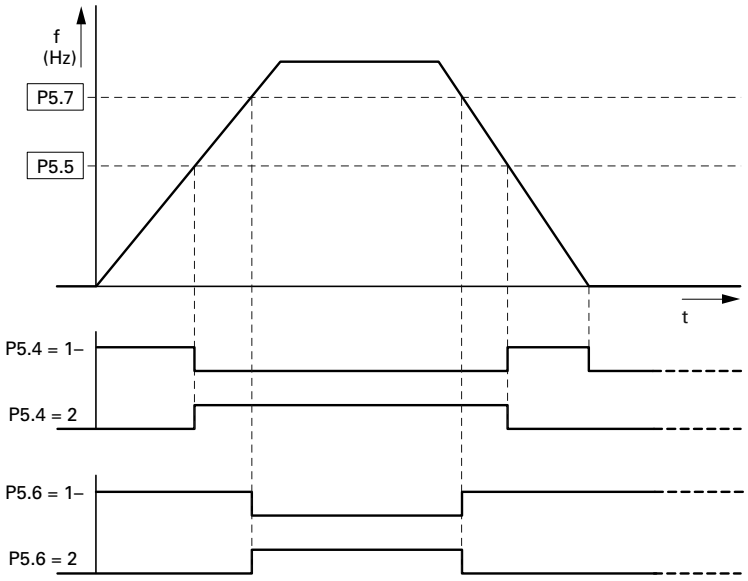

Digital Outputs, continued

PNU	ID	Access RUN	Value/Range	Description	Factory Setting (P1.3)
P5.8	1457	✓	—	**Current monitoring**	0.00
			0.00–P7.2 (I_eA)	Activate output if current value reaches value selected (P7.2 = current limit) A monitoring message can be implemented via the digital outputs (P5.1, P5.2, P5.3 = 27)	
P5.9	1458	✓	—	**DO logic (control signal terminal 13)**	0
				Operation of transistor output DO–	
			0	N/O contact	
			1	N/C contact	
P5.10	1331	✓	—	**RO1 logic (control signal terminals 22, 23)**	0
				Operation of relay contact R13/R14	
			0	N/O contact	
			1	N/C contact	
P5.11	1332	✓	—	**RO2 logic (control signal terminal 24, 25, 26)**	0
				Operation of relay changeover contact	
			0	N/O contact (R21–R24) or N/C contact (R21–R22)	
			1	N/C contact (R21–R24) or N/O contact (R21–R22)	
P5.12	1459	✓	—	**DO, on delay**	0.00
			0.00–320.00s	—	
P5.13	1460	✓	—	**DO, off-delay**	0.00
			0.00–320.00s	—	
P5.14	1461	✓	—	**RO1, on delay**	0.00
			0.00–320.00s	—	
P5.15	1424	✓	—	**RO1, off-delay**	0.00
			0.00–320.00s	—	
P5.16	1425	✓	—	**RO2, on delay**	0.00
			0.00–320.00s	—	
P5.17	1426	✓	—	**RO2, off-delay**	0.00
			0.00–320.00s	—	

Drives Control (P6)

In this parameter group (P6), you can define the operating conditions for the M-Max frequency inverter.

Drives Control

PNU	ID	Access RUN	Value/Range	Description	Factory Setting (P1.3)
P6.1	125	✓	—	**Primary remote control source**	1
			1	Control signal terminals (I/O) You can switch directly between I/O and KEYPAD with the LOC/REM button	
			2	Operating unit (KEYPAD) The LOC/REM button has no function here	
			3	Fieldbus (BUS) You can switch directly between BUS and KEYPAD with the LOC/REM button	

Selecting the control sources can be done directly with the LOC/REM button between the control source selected in P6.1 and the operating unit.

During operation (RUN) the drive is always stopped (STOP) when changing control sources (LOC/REM button).

The control source selected with parameter P6.1 or with the LOC/REM button is shown on the bottom page in the LCD display (see figure on this page).

Example: Control Level I/O Activated

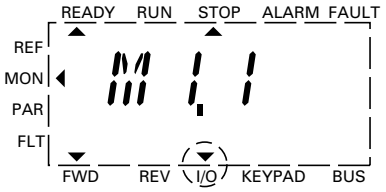

P6.2	117	✓	—	**Primary remote speed reference**	3
			0	Fixed frequency (FF0) The value can be set in parameter P10.1	
			1	Operating unit (REF) This setting causes the setpoint defined at REF to be read. It can be set via the keypad with the arrow buttons or at parameter P6.15	
			2	Fieldbus (BUS) Setpoint entry via Modbus RTU (control signal terminals A and B) or optional fieldbus connection (for example, CANopen, PROFIBUS DP)	
			3	AI1 (analog setpoint 1) Voltage set value: 0 (2)–10V at control signal terminal 2 Scaling and filtering: P2.1 to P2.4	
			4	AI2 (analog setpoint 2) Current setpoint value: 0 (4) –20 mA to control signal terminal 4 Scaling and filtering: P2.5 to P2.8	
			5	Motor potentiometer The actuation is implemented via the digital inputs assigned at P3.18 and P3.19 (DI1–DI6). The required acceleration and deceleration times can be set at P6.5 (acc1) and P6.6 (dec1) Assigning a digital input (DI1–DI6) at P6.20 enables the set value of the motor potentiometer to be set directly to zero	

Drives Control, continued

PNU	ID	Access RUN	Value/Range	Description	Factory Setting (P1.3)
P6.3	101	X	—	**Minimum frequency**	0.00
			0.00–P6.4 (Hz)	—	
P6.4	102	X	—	**Maximum frequency**	60.00
			P6.3–320 Hz	—	
P6.5	103	X	—	**Primary acceleration time (acc1)**	3.0
			0.1–3000s	(See figure and note ① below)	
P6.6	104	X	—	**Primary deceleration time (dec1)**	3.0
			0.1–3000s	(See figure and note ① below)	

Acceleration and Deceleration Time

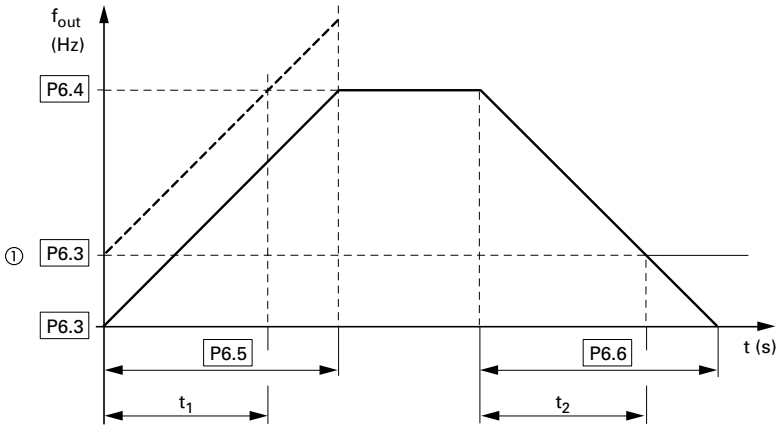

The values for the acceleration time t_1 and the deceleration time t_2 are calculated as follows:

$$t_1 = \frac{(P6.4–P6.3) \times P6.5}{P6.4}$$

$$t_2 = \frac{(P6.4–P6.3) \times P6.6}{P6.4}$$

The defined acceleration (P6.5) and deceleration times (P6.6) apply for all changes to the frequency setpoint value.

If the start-release (FWD, REV) is switched off, the output frequency (f_{Out}) is immediately set to zero. The motor runs down uncontrolled.

If a controlled run-down is requested (with value from P6.6), parameter P6.8 must be 1.

Starting friction and load inertia can lead to longer acceleration times for the drive than are set in P6.5. Large centrifugal masses or if driven by the load, the deceleration time of the drive can be greater than is set in P6.6.

Notes

① When setting a minimum output frequency (P6.3 greater than 0 Hz), the acceleration and deceleration time of the drive is reduced to t_1 or t_2.
Reference points for the acceleration and deceleration times set in parameters P6.5 and P6.6 are always 0 Hz (P6.3) and the maximum output frequency is f_{max} (P6.4).

Drives Control, continued

PNU	ID	Access RUN	Value/Range	Description	Factory Setting (P1.3)
P6.7	505	X	—	**Start function**	0
			0	Ramp (acceleration) The acceleration time with the value set at parameter P6.5	
			1	Flying restart circuit Starting on a running motor. By switching on a small current value, a small torque is created With a frequency search (beginning with the maximum frequency P6.4), the correct rotational field frequency is determined. The output frequency is then adapted to the specified setpoint frequency based on the defined acceleration (P6.5) and deceleration (P6.6) times Use this function if, for instance, the motor is already turning at the start command, with flow-machines (pumps, fans) and with short interruptions in input voltage	
P6.8	506	X	—	**Stop function**	0
			0	Free coasting The motor carries out an uncontrolled stop (coasting) after the start enable (FWD/REV) is switched off or when the STOP button (P6.16) is actuated	
			1	Ramp (deceleration) = dynamic braking Deceleration time with the value set under P6.6 If the energy that is fed back by the motor during the dynamic braking is too high, the deceleration time has to be extended. On devices with internal braking transistors, the excess energy can be dispelled through an external braking resistance (optional) (see "Braking (P12)" on **Page 112**)	
P6.9	500	X	—	**S ramp**	0.0
			0.0	Linear acceleration and deceleration time based on P6.5 and P6.6	
			0.1–10.0s	Time-graded transition to start and end of the acceleration ramp (P6.5) and deceleration ramp (P6.6) The time set here applies for both ramps (see figure below)	

S-Formed Curve for Acceleration and Deceleration Ramps

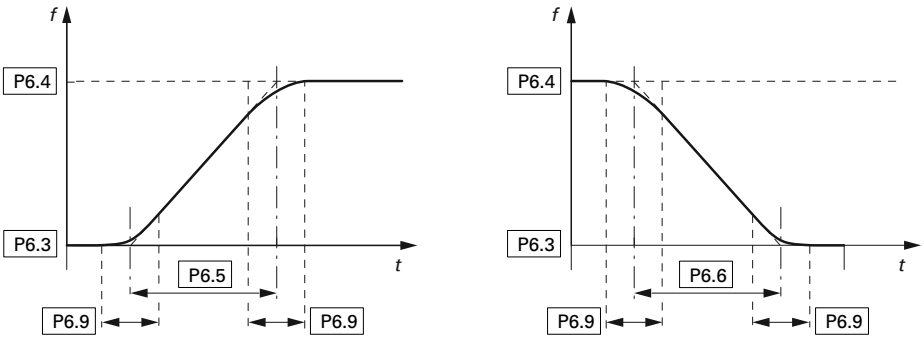

Drives Control, continued

PNU	ID	Access RUN	Value/Range	Description	Factory Setting (P1.3)
P6.10	717	X	—	**REAF, Wait time before an automatic restart**	0.50
			0.10–10.00s	Active, if P6.13 = 1 and P3.1 = 0 Waiting time until automatic restart, after the detected error has disappeared (REAF = Restart After Failure)	
P6.11	718	X	—	**REAF, Testing period over automatic restarts**	30.00
			0.00–60.00s	Active, if P6.13 = 1 Timed monitoring of the automatic restart The monitoring time begins with the first automatic restart. If more than three error messages occur during the testing period, fault status is activated. Otherwise, the error is acknowledged after the test time has elapsed and the test time is only started again with the next error. The number of fault occurrences before a fault is indicated is defined by P6.30	
P6.12	719	X	—	**REAF, Start function with automatic restart**	0
			0	Ramp (acceleration)	
			1	Flying restart circuit	
			2	According to P6.7	
P6.13	731	X	—	**REAF, automatic restart after an error message**	0
			0	Deactivated	
			1	Activated	
P6.14	1600	✓	—	**Stop on direction change via the arrow buttons (</>) of the keypad (KEYPAD)**	1
			0	Deactivated, changes the direction of rotation (FWD ⟷ REV) automatically on passing setpoint zero	
			1	Activated, stops the drive at setpoint zero and requires another actuation of the Start button	

Automatic Restart After Error Message (Two Start Attempts)

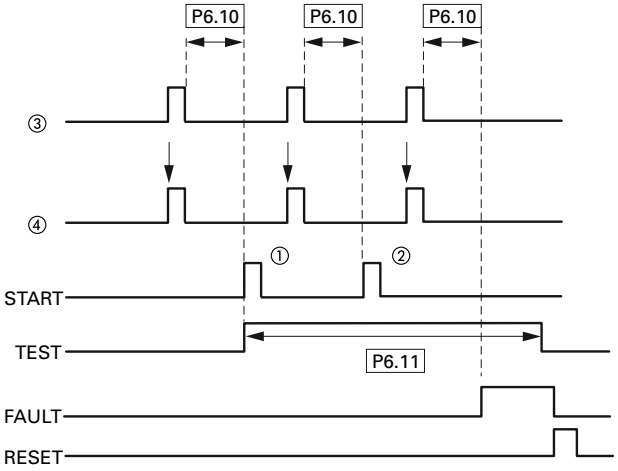

Item Number	Description
1	First automatic restart
2	Second automatic restart
3	Shut-off when error detected
4	Motor stop signal

TEST = monitored test tim
FAULT = shut-off when error message occurs
RESET = reset error message (FAULT)

Drives Control, continued

PNU	ID	Access RUN	Value/Range	Description	Factory Setting (P1.3)
P6.15	184	✓	—	**Keypad frequency reference (REF)**	0.00
			–P6.4–P6.4 Hz	The setpoint value (REF) defined here can be activated at parameter P6.2 and via the keypad (LOC/REM) In KEYPAD mode, the value can be changed with the arrow buttons. The changes are written back automatically to this parameter (P6.15)	
P6.16	1474	✓	—	**Stop button active**	1
				In the default settings, the STOP button of the keypad is active in all operating modes The Stop function can be set at parameter P6.8	
			0	No (deactivated) Stop executed only via control signal terminals (I/O) or fieldbus (BUS) Switching the LOC/REM button to KEYPAD removes the block on the STOP button function set here **Note:** This does not deactivate the Reset function (FS loading with 5s actuation of the STOP button)	
			1	Yes (activated)	
P6.17	1427	X	—	**Secondary remote control source**	3
				Assignment of the control levels as at P6.1 Control level 2 is activated via parameter P3.25	
P6.18	1428	X	—	**Secondary remote speed reference**	2
				Assignment of setpoint sources as at P6.2 Setpoint source 2 is activated via parameter P3.26	
P6.19	502	✓	—	**Secondary acceleration time (acc2)**	10.0
			0.1–3000s	See Note 1 of parameter P6.5 The activation is executed via parameter P3.15	
P6.20	503	✓	—	**Secondary deceleration time (dec2)**	10.0
			0.1–3000s	See Note 1 of parameter P6.6 The activation is executed via parameter P3.15	
P6.21	526	X	—	**Acceleration transition frequency (acc1–acc2)**	0.00
			0.00–P6.4 Hz	0.00 Hz = deactivated If the output frequency set here is exceeded, the acceleration time is switched automatically from acc1 (P6.5) to acc2 (P6.19)	
P6.22	1334	X	—	**Deceleration transition frequency (dec1–dec2)**	0.00
			0.00–P6.4 Hz	0.00 Hz = deactivated If the output frequency set here is exceeded, the deceleration time is switched automatically from dec1 (P6.6) to dec2 (P6.20)	
P6.23	1429	X	—	**REV blocked**	0
				The rotating field reversal of the output frequency is blocked	
			0	Deactivated	
			1	Activated	

Drives Control, continued

PNU	ID	Access RUN	Value/Range	Description	Factory Setting (P1.3)
P6.24	509	X	—	**Skip frequency 1, lower value**	0.00
			0.00–P6.25 Hz	—	
P6.25	510	X	—	**Skip frequency 1, upper value**	0.00
			P6.24–P6.4	—	
P6.26	511	X	—	**Skip frequency 2, lower value**	0.00
			0.00–P6.27 Hz	—	
P6.27	512	X	—	**Skip frequency 2, upper value**	0.00
			P6.26–P6.4 Hz	—	
P6.28	513	X	—	**Skip frequency 3, lower value**	0.00
			0.00–P6.29 Hz	—	
P6.29	514	X	—	**Skip frequency 3, upper value**	0.00
			P6.28–P6.4 Hz	—	

Setting Range for Skip Frequencies

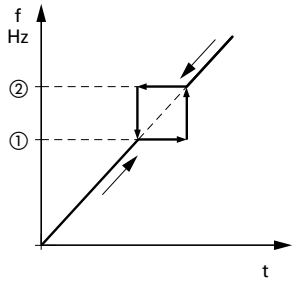

P6.30	759	X	—	**Automatic REAF attempts**	3
			1–10	Define the permissible number of automatic restarts (REAF = Restart After Failure)	
P6.31	1481	X	—	**Manual mode, primary control source**	1
			Like P6.1	Assignment of the control levels Manual mode is activated via parameter P3.37	
P6.32	1482	X	—	**Manual mode, primary speed reference**	3
			Like P6.2	Assignment of setpoint sources Manual mode is activated via parameter P3.37	
P6.33	1483	X	—	**Manual mode, KEYPAD lock**	1
				The Start/Stop functions are blocked in Manual mode via the keypad	
			0	Deactivated	
			1	Enabled	

Notes

① : P6.24, P6.26, P6.28

② : P6.25, P6.27, P6.29

In systems with mechanical resonances, you can cut out these frequency ranges for stationary operation.
Up to three different frequency ranges can be set.

Motor (P7)

For optimal operation, enter the ratings plate information for the motor here. This information makes up the base values for the motor controller (electrical reproduction, see "V/Hz-Characteristic Curve (P11)" on **Page 107)**.

Motor Parameters from Ratings Plate

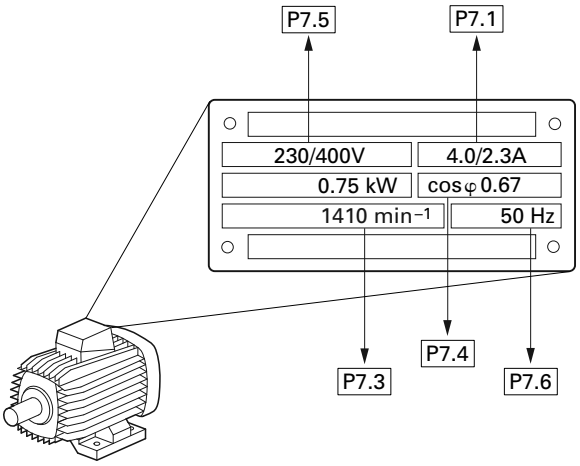

The motor data is set to the rated operation data for the frequency inverter and depends on the performance variables in factory settings.

Switching Type for Motor Stator Windings

When selecting the rating data, take the dependency of the type of switching on the strength of the feeding input voltage into account:

- 230V (P7.5) → delta circuit A → P7.1 = 4A,
- 400V (P7.5) → star connection → P7.1 = 2.3A.

Circuits (Delta, Star)

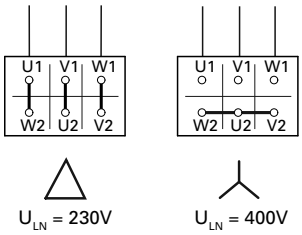

Example: Single-phase connection of the MMX12AA4D8_ frequency inverter to a input voltage of 230V. The stator winding of the motor is connected in a delta circuit (motor rated current 4A as per nameplate in figure on this page).

Required changes for the electrical reproduction for the motor: P7.1 = 4.0, P7.3 = 1410, P7.4 = 0.67.

Motor

PNU	ID	Access RUN	Value/Range	Description	Factory Setting (P1.3)
P7.1	113	X	—	**Motor, rated operational current**	I_e
			0.2 x I_e–2 x I_e (A)	I_e = Frequency inverter's rated operational current (See figure on **Page 88**.)	
P7.2	107	X	—	**Current limit**	1.5 x I_e
			0.2 x I_e–2 x I_e (A)	Factory setting: 1.5 x I_e	
P7.3	112	X	—	**Motor, rated speed**	1720
			300–20000 RPM (min^{-1})	(See figure on **Page 88**.)	
P7.4	120	X	—	**Motor, power factor (cos φ)**	0.85
			0.30–1.00	(See figure on **Page 88**.)	
P7.5	110	X	—	**Motor, rated operating voltage**	①
			180–676V	(See figure on **Page 88**.) Pay attention to the supply voltage and the type of circuit in the stator winding	
P7.6	111	X	—	**Motor, rated frequency**	60.00
			30–320 Hz	(See figure on **Page 88**.)	

Note

① Default values vary based on actual unit ratings.

Protective Functions (P8)

In parameter group P8, you can set the reaction of the frequency inverter to external influences and increase the protection to the drive system (PDS):

- 0 = deactivated, no reaction
- 1 = Alarm (for example, AL 50)
- 2 = Fault (stop mode after error message based on parameters P6.8, for example, F…50)

The (FAULT) and (ALARM) messages are described on **Page 56**.

Protective Functions

PNU	ID	Access RUN	Value/Range	Description	Factory Setting (P1.3)
P8.1	700	X	—	**Analog minimum reference error (live-zero)**	1
				Monitors the live zero of the analog inputs AI1 and AI2 if the parameters P2.1 and P2.5 are set to 1 (4 mA, 2V): AI1, control signal terminal 2, P2.1 AI2, control signal terminal 4, P2.5 A warning or error message (F… 50) is output if the signal drops below 3.0 mA or 1.5V for 5 seconds or 0.5 mA or 0.25V for 0.5 seconds. This reaction time can be changed at P8.10	
			0	Deactivated	
			1	Alarm (AL 50) **Note:** If the setpoint is restored (≧4 mA, ≧2V) the drive starts up automatically if there is no disconnection by the warning message	
			2	Fault (F… 50), stop function according to P6.8	
P8.2	727	X	—	**Undervoltage error**	2
				Under-voltage error in the intermediate circuit because of a low input-side supply voltage, for example, by connecting 230V to a 400V device or if a phase drops out	
			0	Deactivated	
			1	Alarm (AL 09) **Note:** A start signal (START button, rising edge on the control terminals) must exist again for restarting	
			2	Fault (F… 09), stop function according to P6.8	
P8.3	703	X	—	**Ground fault**	2
				The ground fault monitoring checks the currents in the motor phases and is continually active. It protects the frequency inverter from ground faults with high currents	
			0	Deactivated If the monitoring is deactivated, the reaction time is shortened to a start signal **Caution:** When the monitoring is deactivated, a ground fault can cause damage to the inverter	
			1	Alarm (AL 03)	
			2	Fault (F… 03), stop function according to P6.8	

Protective Functions, continued

PNU	ID	Access RUN	Value/Range	Description	Factory Setting (P1.3)
P8.4	709	X	—	**Stall protection**	1
				The stall protection function is an overload protection. It protects the motor from brief overloads (for example, blocked motor shaft). The stall current is equal to the motor rated operational current x 1.3, stall time is 15 seconds, and stall frequency limit is 25 Hz. If the current is higher than the limit and the frequency is less than 25 Hz, the drive will react as defined by this parameter **Note:** With long motor cable lengths and low motor power (poor efficiency cos φ), a higher (capacitive) motor current can flow causing early tripping. Solution: Motor reactor or sinus filter	
			0	Deactivated	
			1	Alarm (AL 15)	
			2	Fault (F… 15), stop function according to P6.8	
P8.5	713	X	—	**Underload protection**	0
				The underload protection monitors the load of the connected motor in the range of 5 Hz up to the maximum output frequency. This requires that the output current of the frequency inverter be monitored. A message will be generated if the values set in P8.12 and P8.13 are undershot within 20 seconds	
			0	Deactivated	
			1	Alarm (AL 17)	
			2	Fault (F…17), stop function according to P6.8	
P8.6	704	X	—	**Motor, temperature protection**	2
				The motor temperature protection is designed to protect the motor from overheating. It is based on a temperature algorithm and uses the motor current (P7.1) to determine the motor load (see figure on **Page 92**)	
			0	Deactivated	
			1	Alarm (AL 16)	
			2	Fault (F… 16), stop function according to P6.8	
P8.7	705	X	—	**Motor, ambient temperature**	40
			–20° to 100°C	—	
P8.8	706	X	—	**Motor, cooling factor at zero frequency**	40.0
			0.0–150%	The cooling factor of the motor with a zero frequency defines the relationship to the cooling of the motor at the rated frequency with the rated operational current without an external fan (see figure on **Page 92**)	
P8.9	707	X	—	**Motor, thermal time constant**	45
			1–200 min	The temperature time constant determines the time-span in which the heat calculation model achieves 63% of its end value. It depends on the design of the motor and is different from manufacturer to manufacturer. The larger the motor design, the greater the time constant	

Motor Heat Protection (P8.6–P8.9)

The motor temperature protection is based on a calculated temperature model and uses the motor current set in parameter P7.1 to determine the motor load. It does not use a temperature measurement in the motor.

The calculated temperature model cannot protect the motor if the cooling flow to the motor is influenced, for example, by a blocked air entry-way.

The temperature model is based on the assumption that the motor achieves a winding temperature of 284°F (140°C) at rated speed and an ambient temperature of 104°F (40°C), with 105% rated load.

The cooling efficiency, without external cooling, is a function of the speed (corresponding with the output frequency of the frequency inverter). When the motor is stationary (zero frequency), heat is also dissipated through the housing surface.

When the motor is under a great load, the current required by the motor can be higher than the rated operational current. The current provided by the frequency inverter can be higher than the rated operational current of the motor. If the load requires this much current, there is a danger of a thermal overload. This is especially the case at lower frequencies (<25 Hz). Here, the cooling effect (speed of the motor fan) and the load rating of the motor (see data sheet of the motor) are reduced similarly with lower frequencies. On motors that are equipped with an external fan, there is less of a load reduction at lower speeds.

With parameters P8.6 to P8.9, a motor temperature protection can be set for the M-Max frequency inverter which protects the motor from overheating. The temperature protection is calculated. A direct temperature measuring in the windings of the motor (see thermistor protection) offers great protection.

The reaction of the M-Max frequency inverter to a detected thermal overload can be set via parameter P8.6. At parameter P8.8 you can set the cooling output (P_{Cool}) on the motor at zero frequency (standstill). Note the specifications of the motor manufacturer.

Possible setting values are 0–150% of the cooling output at the rated frequency f_N (see nameplate of the motor = P7.6).

If the protection function is deactivated (P8.6 = 0), the temperature model of the motor is reset to zero.

The thermal current I_{th} corresponds with the load current at maximum thermal load rating on the motor. In continuous operation, at rated frequency (f_N = P7.6) and rated loading, the value of I_{th} corresponds with the rated operational current of the motor (see the motor rating plate = P7.1).

Motor Cooling Power

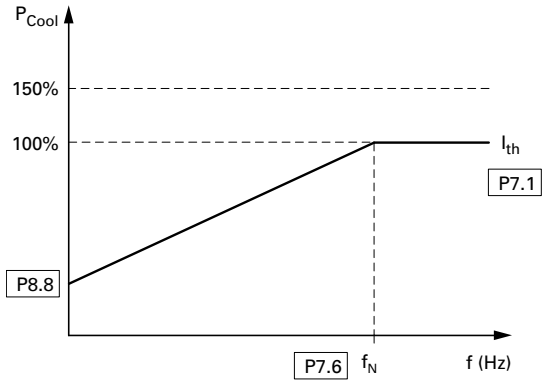

The time constant for the motor temperature (P8.9) defines how long it takes until the temperature has achieved 63% of its end value in the motor. In practice, this temperature time is constant depending on the type and design of the motor. It varies between the different design sizes at the same shaft power and between the different motor manufacturers.

The larger a motor is, the greater the time constant. The factory set value (P8.9 = 45 min) can be set in the range between 1 and 200 minutes. The guide value is twice t_6 time of a motor. The t_6 time defines the time in seconds in which a motor can be operated safely at six times the rated operational current (see data sheet of the motor, manufacturer specifications).

If the drive is stopped, the time constant is increased internally to three times the set parameter value (P8.9).

Calculation of Motor Temperature

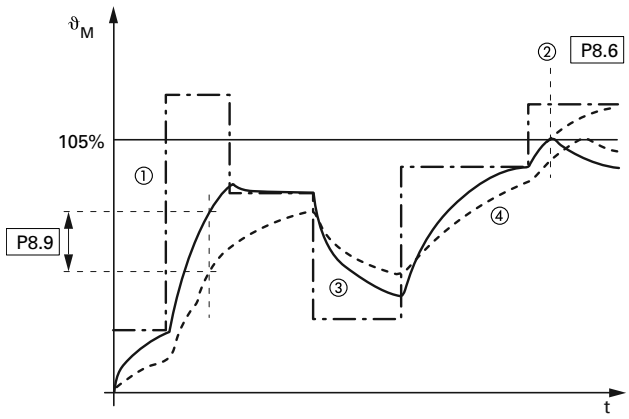

Notes

① Motor current I/I_T.
② Trip value shut-off (error message) or warning according to P8.6.
③ Calculated value for the motor temperature $Q = (I/I_T)^2 \times (1 - e^{-t/T})$.
④ Motor temperature ϑ_M (example).
P8.9 = Motor temperature time constant (T).

Protective Functions, continued

PNU	ID	Access RUN	Value/Range	Description	Factory Setting (P1.3)
P8.10	1430	X	—	**Analog minimum reference error, reaction time**	0.5
			0.0–10.0s	(see parameter P8.1)	
P8.11	1473	—	—	**(Not used)**	0
P8.12	714	✓	—	**Underload low torque limit**	60.0
			10–50%	Motor torque The underload protection enables faults such as a torn drive belt or the dry running of a pump to be detected without any additional sensors The reaction to a detected underload can be set at P8.5 The value set here determines the lowest permissible torque limit. This function can also be used with output frequencies that are above the cutoff frequency (P11.2, field weakening point) **Note:** The value set here is reset automatically to the factory setting (50.0%) if the parameter for the motor rated current (P7.1) is changed **Underload Limit** 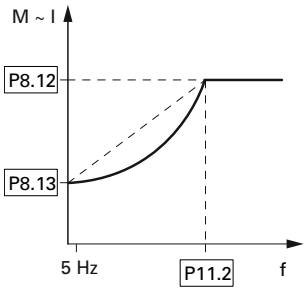	
P8.13	715	✓	—	**Underload, low torque limit at zero frequency**	10.0
			5–150%	Motor torque The value set here determines the lowest permissible torque limit at zero frequency (range 0–5 Hz) **Note:** The value set here is reset automatically to the factory setting (50.0%) if the parameter for the motor rated current (P7.1) is changed	

Protective Functions, continued

PNU	ID	Access RUN	Value/Range	Description	Factory Setting (P1.3)
P8.14	733	✓	—	**Fieldbus error**	2
				Reaction to a fieldbus error if the fieldbus is set as active control level (BUS) (P6.1 = 2, P6.17 = 2)	
			0	Deactivated	
			1	Alarm (AL 53)	
			2	Fault (F…53), stop function according to P6.8	
P8.15	734	✓	—	**Fieldbus interface error**	2
				Reaction to a fieldbus interface error (slot) at the frequency inverter or when the fieldbus interface card is missing when the fieldbus is set as active control level (BUS) (P6.1 = 2, P6.17 = 2)	
			0	Deactivated	
			1	Alarm (AL 54)	
			2	Fault (F…54), stop function according to P6.8	

PID Controller (P9)

The M-Max series frequency inverters are provided with a PID controller that you activate with P9.1 = 1. The controller can be deactivated via a digital input (P3.12).

PID control is superimposed on the frequency inverter function. You should therefore set all of the frequency inverter's drive-related parameters, such as maximum output frequency (motor speed), acceleration and deceleration ramps (mechanical load, belts). Frequency inverter and motor are process-integrated actuators. The output frequency to the motor (which determines the speed) is specified as manipulated variable from the PID controller.

When the PID controller is activated, the setpoints and actual values become process variables and are normalized automatically into percentages (%). For example, the specified setpoint (0–100%) here is the same as a volume flow (0–50 m^3/h). The actual value here is the volume flow (m^3/h) from a suitable sensor, which is evaluated again as a percentage (0–100%).

If this process data is to be displayed in the physical variable (m^3/h), you can set the conversion with parameter P9.19 (see "Display factor (P9.19)").

PID Controller

PNU	ID	Access RUN	Value/Range	Description	Factory Setting (P1.3)
P9.1	163	✓	—	**PID Controller**	0
			0	Deactivated	
			1	Activated for drive control	
			2	Activated for external application	
P9.2	118	✓	—	**PID controllers, P gain**	100
			0–1000%	Proportional Gain (KP) Low values attenuate the control action High values can cause oscillation	
P9.3	119	✓	—	**PID controller, I reset time**	10.0
			0–320s	Integral time constant	
P9.4	167	✓	—	**PID controller setpoint, keypad reference**	0.0
			0–100%	Setpoint setting range utilizing keypad as reference P9.5 = 0	
P9.5	332	✓	—	**PID controller, setpoint source**	0
			—	The setting range is limited by P6.3 (raised starting frequency) and P6.4 (end frequency)	
			0	Keypad (P9.4)	
			1	Fieldbus	
			2	AI1	
			3	AI2	

PID Controller, continued

PNU	ID	Access RUN	Value/Range	Description	Factory Setting (P1.3)
P9.6	334	✓	—	**PID controller, process variable (PV) source (Actual value or feedback)**	2
			0	Fieldbus	
			1	AI1 and S2, (see figure on **Page 39**) P2.1 = 0 (0 mA/0V) P2.1 = 1 (4 mA/2V)	
			2	AI2 and S3, (see figure on **Page 39**) P2.5 = 0 (0 mA/0V) P2.5 = 1 (4 mA/2V)	
P9.7	336	✓	—	**PID controller, actual value limiting, minimum**	0.0
			0–100%	—	
P9.8	337	✓	—	**PID controller, actual value limiting, maximum**	100.0
			0–100%	—	
P9.9	340	✓	—	**PID controller, controller deviation**	0
			0	Not inverted	
			1	Inverted Inverted PID control (P9.9 = 1) is used in applications in which the feedback value generator supplies an inverted signal Example: With increasing pressure, a pressure sensor output signal (+10V…0V = 0…max. bar) drops	
P9.10	132	✓	—	**PID controller, D rate time**	0.00
			0–10s	Differential time constant	
P9.11	1431	✓	—	**PID controller, output filter, delay time**	0.0
			0.00–10.00s	—	
P9.12	1016	✓	—	**Sleep mode, frequency**	0.00
			0–P6.4 Hz	The frequency inverter stops automatically if the frequency of the drive drops below the sleep level defined by this parameter for a longer period than the time defined by parameter P9.14	
P9.13	1018	✓	—	**Sleep mode, wake up setpoint**	25.0
			0.00–100%	The wake up setpoint defines the value which the PID controller process value (P9.6) must drop below before a RUN mode of the frequency inverter is restored.	
P9.14	1017	✓	—	**Sleep mode, delay time**	30
			0–3600s	This parameter determines the minimum period in which the frequency inverter must stay below the frequency set at P9.12 before the frequency inverter is stopped	

PID Controller, continued

PNU	ID	Access RUN	Value/Range	Description	Factory Setting (P1.3)
P9.15	1433	✓	—	**Hysteresis, upper limit**	0.0
			0.00–100%	The FBV (Feedback Value Check) message P5.1 (2.3) = 25 is output if the actual value in RUN mode is below the lower limit value P9.16. It stays active until: The actual value exceeds the upper limit value P = 9.15 The frequency inverter switches from RUN mode to STOP mode	
P9.16	1434	✓	—	**Hysteresis, lower limit**	0.0
			0.00–100%	See P9.15	
P9.17	1435	✓	—	**PID controller, max. controller deviation**	3.0
			0.00–100%	If the PID controller is activated (P9.1 = 1), and the deviation between the setpoint and the actual value exceeds the value entered here, the PID monitoring is activated. Setting at P5.1 (2.3) = 12	
P9.18	1475	✓	—	**PID controller, reference value scaling**	1
			0.1–32.7	Setpoint display, multiplication of a factor to display process-adjusted variables The value is displayed in M1.17	
P9.19	1476	✓	—	**PID controller, process variable scaling**	1
			0.1–32.7	Actual value indication, multiplication factor for displaying process variables The value is displayed in M1.18	
P9.20	1478	✓	—	**PID controller, output signal limit**	100.0
			0.00–100.0%	—	

Activating/Deactivating PID Controller

With a digital input (in FS DI6) configured as PID, PID control can be switched on and off through control signal terminals. When you activate the PID input, PID control is disabled. The frequency inverter then works with its standard frequency control again.

This function is available only when PID control is active (P9.1 = 1).

Do not switch the PID controller on and off while the frequency inverter is in RUN mode (RUN LED is lit).

Parameterize one of the digital inputs 1 to 6 as a PID, by setting the parameter (P3.12 = 1–6) (factory setting (P3.12 = 6).

The Activate/Disable PID Control function is optional. If you want PID control to be active all the time, you only need to set P9.1 = 1.

PID-System Deviation (OD)

The PID-system deviation (e) is the difference between reference and actual value (process variable PV).

The digital output configured as OD is activated if a freely selectable control deviation (P9.17) is exceeded with the PID controller (P9.1 = 1) active. The OD output stays activated until this limit value is exceeded.

If you wish to configure a parameterizable digital output or signalling relay as OD, you must set the limit value that activates the OD signal when exceeded at P9.17.

Action: Then parameterize one of the digital inputs as OD output by setting the value 12 at P5.1–P5.3.

Function Chart for OD (PID System Deviation)

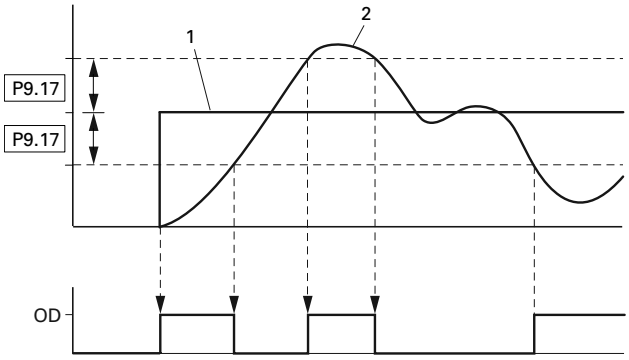

Item Number	Description
1	Setpoint value
2	Actual value

Feedback Value Check Signal (FBV)

The FBV (Feedback Value Check) signal is issued when:

- The actual value (PV) drops below the lower limit value (P9.16) in RUN mode. It remains active until:
- The actual value exceeds the upper limit value (P9.15)
- The frequency inverter changes from RUN mode to STOP mode (deceleration with the set ramp time)

PID Controller, Actual Value Message FBV

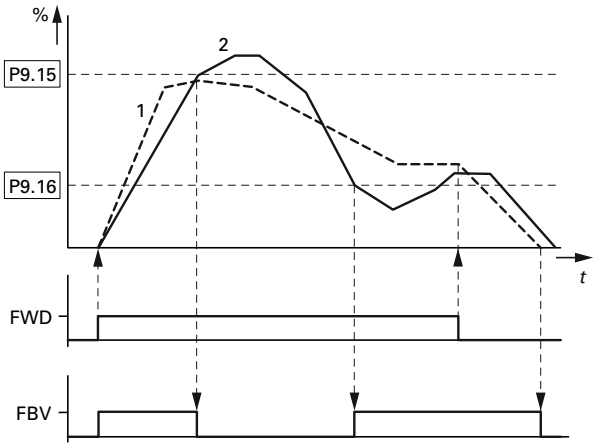

Item Number	Description
1	Output frequency (Hz)
2	Actual value (process variable PV)

FWD: Start signal, clockwise rotating field.
FBV: Actual value message, limit values exceeded (P9.15, P9.16).

The upper and lower actual value limits (P9.15, P9.16) are "process messages". They cannot be used for monitoring the actual value signal. FBV is not a fault message.

When P5.1–P5.3 = 25, you can set the digital output or a signalling relay for the FBV.

The FBV actual value message enables the M-Max PID controller to implement a direct "two-stage control", as is commonly used for HVAC applications.

Example: Ventilation system with two fans (frequency inverter). Under normal operating conditions, the maximum output power of fan 1 (M1) is sufficient to maintain the actual value (PV) at the reference value. When fan 1 is fully used and additional airflow is required, a second fan (M2) with constant power is a simple solution.

Block Diagram, Ventilation with "Two-Stage Control"

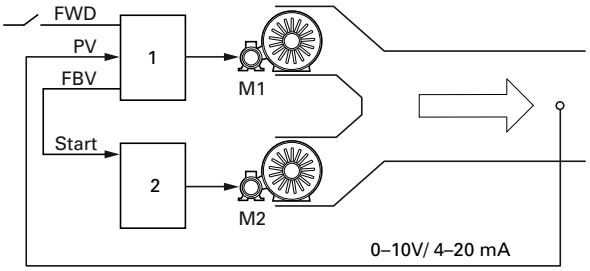

Item Number	Description
1	Frequency inverter with PID controller for M1 fan motor
2	Motor starter (frequency inverter, soft starter, contactor) for M2 fan motor

FWD: Start signal drive 1.
FBV: Actual value message of drive 1 for activating drive 2.
Start: Start signal, drive 2.

With the closed-loop control example shown here, the sequence is based on the signal diagram in the figure on this page. The process variables in the limit values are shown in percent (%). The output frequency (Hz) is shown superimposed in the same diagram.

- Start of fan motor M1 with FWD signal. The actual value (PV) is below the limit value of P9.16. The FBV output (P5.1–P5.3 = 25) then switches and fan motor M2 (Start) starts automatically
- The actual value rises and reaches the upper limit (P9.15). The FBV output is automatically switched off (= fan M2 Off). Fan M1 remains in operation and works in linear control mode. In a correctly set up system, this is the normal operating range
- If the actual value drops below the limit value (P9.16), the FBV output is switched. and fan M2 is activated again to support fan M1
- When the FWD signal is removed from frequency inverter 1, the inverter goes from RUN to STOP mode and decelerates the drive over the set ramp time
- When frequency inverter 1 is stopped, the FBV output is automatically de-energized so that fan M2 also stops

Fixed Frequency Setpoint Value (P10)

Fixed frequencies have a higher priority than frequency reference values. They can be called individually, binary coded, or via the digital inputs DI1 to DI6 or via the sequencing control program.

The maximum permitted set value for a fixed frequency is limited by parameter P6.4 (maximum frequency).

A fixed frequency value can go below a minimum limit frequency set at parameter P6.3.

The fixed frequency values can be changed during operation (RUN).

Fixed Frequency

You can set eight different fixed frequency setpoints (FF0 to FF7) in the P10 parameter group.

Fixed Frequencies FF1, FF2 and FF3 (= FF1 + FF2)

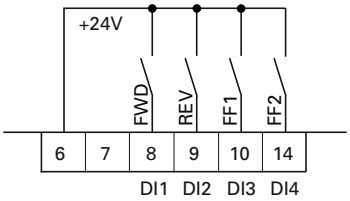

The fixed frequencies FF1 = 10 Hz, FF2 = 15 Hz and FF3 = 20 Hz can be called via digital inputs DI3 (control signal terminal 10) and DI4 (control signal terminal 14) in the factory setting.

Fixed Frequency

Input (Binary)			Fixed Frequency
B0	B1	B2	(Factory setting)
—	—	—	FF0, P10.1 = 5 Hz, only if P6.2 = 0
X	—	—	FF1, P10.2 = 10 Hz
—	X	—	FF2, P10.3 = 15 Hz
X	X	—	FF3, P10.4 = 20 Hz
—	—	X	FF4, P10.5 = 25 Hz
X	—	X	FF5, P10.6 = 30 Hz
—	X	X	FF6, P10.7 = 40 Hz
X	X	X	FF7, P10.8 = 50 Hz

The change between the individual fixed frequency values is completed with the acceleration and deceleration times set at P6.5 and P6.6. When the FWD or REV enables are switched off, the output frequency is immediately blocked (uncontrolled coasting). P6.8 = 1 causes the drive to perform a controlled deceleration **[1]**.

Example: Activation of the Fixed Frequencies in the Factory Setting with Acceleration and Deceleration Ramps

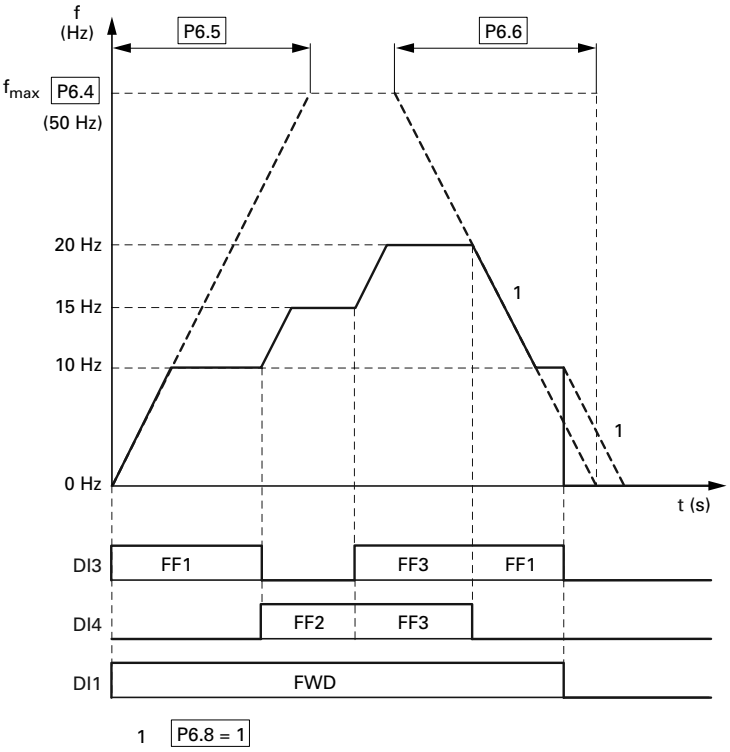

Fixed Frequency Setpoint Value

PNU	ID	Access RUN	Value/Range	Description	Factory Setting (P1.3)
P10.1	124	✓	—	**Fixed frequency FF0**	6.00
			0.00–P6.4	0.00 Hz up to the maximum frequency value (P6.4) This value is only active if the setpoint input has been set to parameter P6.2 = 0	
P10.2	105	✓	—	**Fixed frequency FF1**	12.00
			0.00–P6.4	0.00 Hz up to the maximum frequency value (P6.4) In the factory setting, this value can be called directly via DI3 (control signal terminal 10)	
P10.3	106	✓	—	**Fixed frequency FF2**	18.00
			0.00–P6.4	0.00 Hz up to the maximum frequency value (P6.4) In the factory setting, this value can be called directly via DI4 (control signal terminal 14)	
P10.4	126	✓	—	**Fixed frequency FF3**	24.00
			0.00–P6.4	0.00 Hz up to the maximum frequency value (P6.4) In the factory setting, this value can be called directly by joint actuation of control signal terminals 10 and 14 (DI3 and DI4)	
P10.5	127	✓	—	**Fixed frequency FF4**	30.00
			0.00–P6.4	0.00 Hz up to the maximum frequency value (P6.4) For activation, parameter P3.11 must be assigned a third digital input. For example, P3.11 = 5: DI5 (control signal terminal 15) This value can then be called up directly via DI3 **Note:** In the factory setting, DI5 (control signal terminal 15) is assigned with the error acknowledgement (Reset). Setting P3.11 = 0 is recommended	
P10.6	128	✓	—	**Fixed frequency FF5**	36.00
			0.00–P6.4	0.00 Hz up to the maximum frequency value (P6.4) For activation, parameter P3.11 must be assigned a third digital input. For example, P3.11 = 5: DI5 (control signal terminal 15), see Note on P10.5) This value can be called directly by joint actuation of control signal terminals 10 (DI3) and 15 (DI5)	
P10.7	129	✓	—	**Fixed frequency FF6**	48.00
			0.00–P6.4	0.00 Hz up to the maximum frequency value (P6.4) For activation, parameter P3.11 must be assigned a third digital input. For example, P3.11 = 5: DI5 (control signal terminal 15) see Note on P10.5) This value can be called directly by joint actuation of control signal terminals 14 (DI4) and 15 (DI5)	
P10.8	130	✓	—	**Fixed frequency FF7**	60.00
			0.00–P6.4	0.00 Hz up to the maximum frequency value (P6.4) For activation, parameter P3.11 must be assigned a third digital input. For example, P3.11 = 5: DI5 (control signal terminal 15), see Note on P10.5) This value can be called directly by joint actuation of control signal terminals 10 (DI3), 14 (DI4) and 15 (DI5)	

Sequence Control

The sequence control enables a cyclical program sequence with the fixed frequency setpoints FF0 to FF7. To run the program you can also select from four different operating modes and assign rotation direction (FWD/REV) and run time to the individual fixed frequencies. The program sequence is programmed in binary code and is represented by a decimal number for simple entry.

Fixed Frequency Setpoint Value, continued

PNU	ID	Access RUN	Value/Range	Description	Factory Setting (P1.3)
P10.9	1436	✓	—	**PLC Sequence control, operating mode**	0
				Selection of operating modes for cyclical program execution The start of the program execution via a digital input (DI1–DI6) is executed according to parameter P3.21 The pause of the program execution via a digital input (DI1–DI6) is executed according to parameter P3.22	
			0	Deactivated	
			1	Execute program cycle once	
			2	Execute program cycle continuously	
			3	Execute program cycle in steps	
			4	Execute program cycle continuously in steps	
P10.10	1437	✓	—	**PLC Sequence control, program (FWD/REV)**	0
			0–255	Summated decimal value from the binary coded program sequence (see table below)	

The table below shows the parameters of the fixed frequencies (P10.1–P10.8) with the associated run times (P10.11–P10.18) and the corresponding values in binary and decimal format.

Depending on the selected rotating field direction (FWD/REV), the decimal value is multiplied by 0 (= FWD) or 1 (= REV). The sum of all decimal values forms the program number for parameter P10.10.

Determining the Program Number (P10.10)

	Fixed Frequency		Values				Example A		Example B	
	Hz	s	Binary	Decimal	FWD	REV	(See Figure on Page 104)		(See Figure on Page 105)	
FF0	P10.1	P10.11	2^0	1	0	1	FWD	0	FWD	0
FF1	P10.2	P10.12	2^1	2	0	1	FWD	0	FWD	0
FF2	P10.3	P10.13	2^2	4	0	1	FWD	0	FWD	0
FF3	P10.4	P10.14	2^3	8	0	1	FWD	0	FWD	0
FF4	P10.5	P10.15	2^4	16	0	1	FWD	0	FWD	0
FF5	P10.6	P10.16	2^5	32	0	1	FWD	0	FWD	0
FF6	P10.7	P10.17	2^6	64	0	1	FWD	0	REV	64
FF7	P10.8	P10.18	2^7	128	0	1	FWD	0	REV	128
				Sequence control, program (FWD/REV): P10.10 =				0		192

The fixed frequencies (FF0–FF7) are only active if the run times (P10.11–P10.18) of the associated parameters are set (>0s).

The run times in the individual program steps must be greater than the transition times for the subsequent frequency value. Example as per figure on **Page 104** (Example A):

Acceleration time P6.5 = 3.0s

Maximum frequency P6.4 = 60 Hz

FF1: P10.2 = 20 Hz

FF2: P10.3 = 40 Hz

$$t_{FF} \geqq \frac{\triangle FF \times P6.5}{P6.4}$$

$$P10.13 \geqq \frac{(P10.3 – P10.4) \times P6.5}{P6.4} \geqq \frac{(40\ Hz – 20\ Hz) \times 3s}{60\ Hz} \geqq 1s$$

The transition time from FF1 to FF2 is one second. Parameter P10.13 should therefore be set to a value greater than one second.

Fixed Frequency Setpoint Value

PNU	ID	Access RUN	Value/Range	Description	Factory Setting (P1.3)
P10.11	1438	✓	—	**Set time for FF0**	0
			0–1000s	0s = Fixed frequency FF0 deactivated (sequence control P10.9)	
P10.12	1439	✓	—	**Set time for FF1**	0
			0–1000s	0s = Fixed frequency FF1 deactivated (sequence control P10.9)	
P10.13	1440	✓	—	**Set time for FF2**	0
			0–1000s	0s = Fixed frequency FF2 deactivated (sequence control P10.9)	
P10.14	1441	✓	—	**Set time for FF3**	0
			0–1000s	0s = Fixed frequency FF3 deactivated (sequence control P10.9)	
P10.15	1442	✓	—	**Set time for FF4**	0
			0–1000s	0s = Fixed frequency FF4 deactivated (sequence control P10.9)	
P10.16	1443	✓	—	**Set time for FF5**	0
			0–1000s	0 s = Fixed frequency FF5 deactivated (sequence control P10.9)	
P10.17	1444	✓	—	**Set time for FF6**	0
			0–1000s	0s = Fixed frequency FF6 deactivated (sequence control P10.9)	
P10.18	1445	✓	—	**Set time for FF7**	0
			0–1000s	0s = Fixed frequency FF7 deactivated (sequence control P10.9)	

Example A

P10.9 = 1: Execute program cycle once.

P10.10 = 0 (see **Page 102**): The fixed frequencies FF0 to FF7 (P10.1–P10.8) are set in numerical order with the associated run times (P10.10–P10.18) and rotating direction (FWD) as setpoint.

The start command (RUN) for the sequence control is set via the digital input (DI1–DI6) defined at parameter P3.21. It has a higher priority than other start commands. This also applies to the fixed frequency setpoints of the sequence control compared to setpoint sources.

WARNING

If a start command is present at a digital input (DI1–DI6) assigned at P3.21, the sequence control also starts automatically (without switch edge) when the power supply is switched on (for example, after a power supply failure).

If the start command (RUN) is switched off during the program cycle, the drive stops according to the settings at P6.8. The program sequence is then ended immediately. A renewed start command begins once more with the first fixed frequency.

A digital input (DI1–DI6) can be assigned the "Pause sequence control" function at parameter 3.22. The program sequence is then stopped and can then be resumed from this stopping point (fixed frequency).

The operating states of the sequence control can be displayed via the digital outputs RO1, RO2 and DO.

The following assignments are shown in example A:

- Relay RO1 (P5.1 = 16) signals the operation (RUN) of the sequence control. It switches on with the start command and then off after one completed program cycle (P10.9 = 1, P10.9 = 3) at the end of the program cycle (P5.3 = 18)
- **[1]** With a continuous program sequence (P10.9 = 2, P10.9 = 4), the start signal is switched off first (P3.21)
- Relay RO2 (P5.2 = 17) indicates the end of the individual run times (P10.11–P10.18)
- Transistor DO (P5.3 = 18) indicates the end of a program cycle

Value 19 (for example, P5.3 = 19) enables a pause command (P3.22) of the sequencing control to be indicated via a digital output.

Example A, Program Cycle Executed Once (P10.9 = 1, P10.10 = 0)

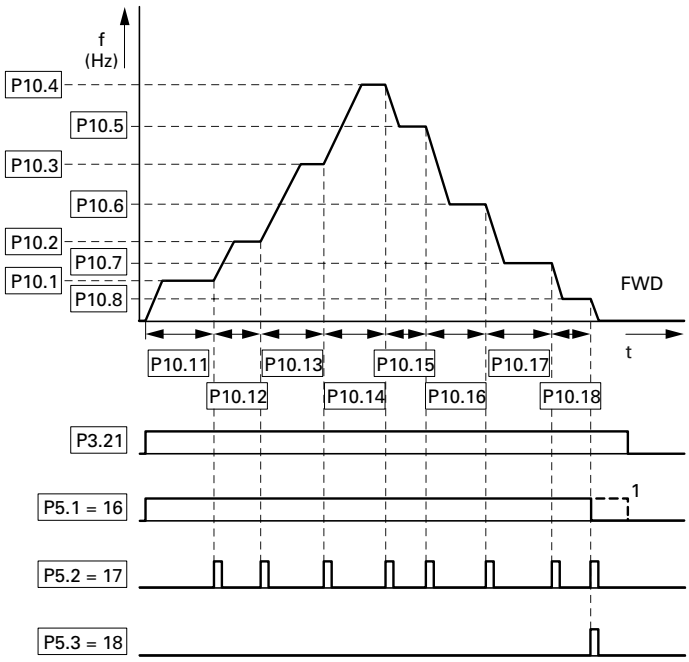

Example B

Comparable example A.

P10.9 = 1: Execute program cycle once.

P10.10 = 192 (see **Page 102**): This decimal program code (192 = 64 +128) assigns the clockwise rotating field (REV) to fixed frequencies FF6 (P10.7) and FF8 (P10.8).

Example B, Program Cycle Executed Once (P10.9 = 1, P10.10 = 192)

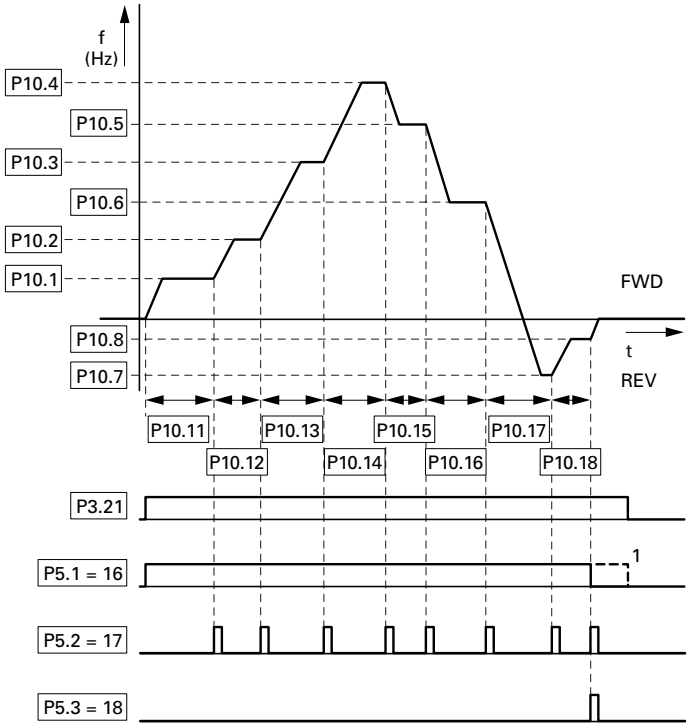

Example C

Comparable example A.

P10.10 = 0

P10.9 = 2: Execute program cycle once in steps.

Each fixed frequency (P10.1–P10.10) is called individually in the program sequence. After the assigned run times (P10.11–P10.18) have elapsed, the output frequency is set to zero according to the Stop function (P6.8) before the next numerically fixed frequency value is executed.

A clockwise rotating field (REV) can also be assigned here to the individual fixed frequencies as a decimal program number at parameter P10.10 (see **Page 102**).

Example C, Program Cycle Executed Once in Steps (P10.9 = 2, P10.10 = 0)

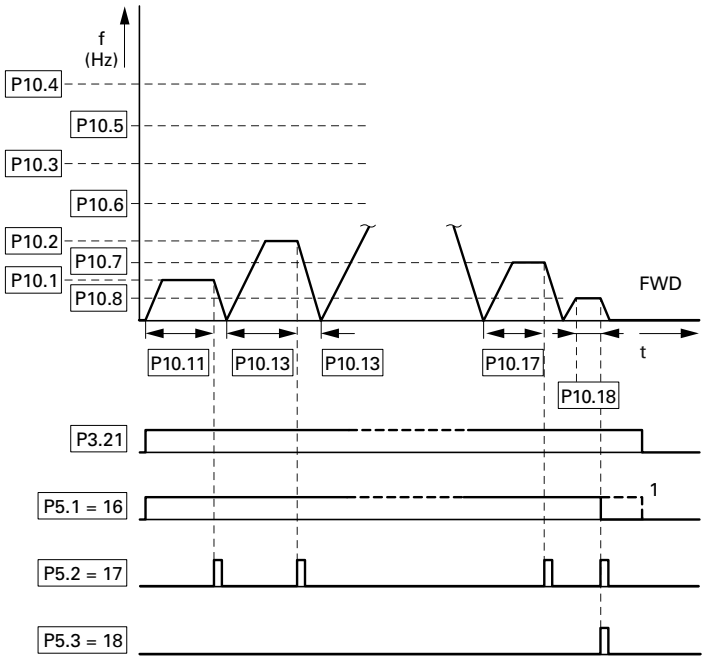

V/Hz-Characteristic Curve (P11)

The M-Max series frequency inverters operate with a sinusoidal pulse width modulation (PWM) in the inverter. The IGBTs are actuated by two V/f-based control procedures that you can select in parameter P11.8.

P11.8 = 0:

- Frequency control (Hz)
- Parallel connection of several motors
- Large power difference (P_{FU} >> P_{Motor})
- Switching in the output

P11.8 = 1:

- Speed control (RPM, min^{-1}) with slip compensation
- Single operation (only one motor), maximum one power rating smaller
- High torque (requirement: exact motor data for the motor calculation model)

The V/f characteristic (voltage/frequency characteristic) represents a control procedure of the frequency inverter in which the motor voltage is controlled in a specific ratio to the frequency. If the voltage/frequency ratio is constant (linear characteristic), the magnetizing flux and the torque behavior of the connected motor is virtually constant.

In the standard application, the benchmark values for the V/Hz-characteristic curve correspond with the rated operational data of the connected motor (see the motor ratings plate):

- Cut-off frequency P11.2 = Rated motor frequency P7.6 = Maximum frequency P6.4
- Output voltage P11.3 = Nominal motor voltage P7.5

The rating data of the V/Hz-characteristic curve is assigned automatically and corresponds with the values of parameter P7.5 (nominal motor voltage) and P7.6 (rated motor frequency).

If you require other values for the V/Hz-characteristic curve, you must first set parameters P7.5 and P7.6, before you change the parameters of the V/Hz-characteristic curve shown here.

V/Hz-Characteristic Curve

PNU	ID	Access RUN	Value/Range	Description	Factory Setting (P1.3)
P11.1	108	X	—	**V/Hz characteristic curve**	0
			0	Linear	
				The output voltage changes linearly with the output frequency; from zero to voltage P11.3 with the cut-off frequency P11.2 By defining a minimum frequency (P6.3), a voltage corresponding with one of the linear characteristic curves is output The V/Hz ratio running linearly between zero and the cut-off frequency remains constant With parameter P11.6, the voltage value can be raised by percentages in a linear V/Hz-ratio over the entire manipulating range	
			1	Squared	
				The output voltage changes quadratically with the output frequency; from zero to voltage P11.3 with the cut-off frequency P11.2 By defining a minimum frequency P6.3, a voltage corresponding with one of the quadratic characteristic curves is output. The V/Hz ratio running quadratically between zero and the cut-off frequency remains constant With parameter P11.6, the voltage value can be raised as a percentage by a quadratic V/Hz ratio over the entire manipulating range	
			2	Configurable	
				In connection with parameters P11.4, P11.5 and P11.6, the V/Hz ratio and therefore the parameters for characteristic curve progress can be defined as required	

V/Hz-Characteristic Curve (P11.1)

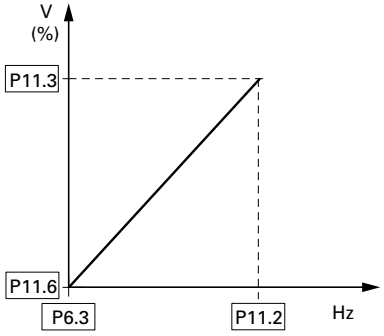

Characteristic Curve: V/Hz (P11.1) Linear

P11.1 = 0

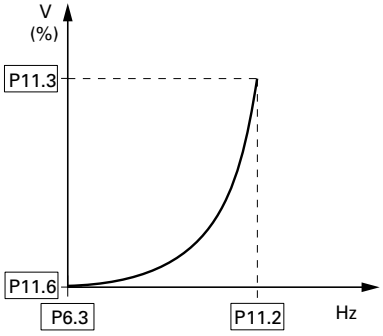

Squared

P11.1 = 1

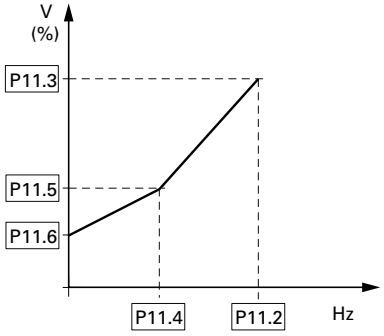

Configurable

P11.1 = 2

V/Hz-Characteristic Curve, continued

PNU	ID	Access RUN	Value/Range	Description	Factory Setting (P1.3)
P11.2	602	X	—	**Cut-off frequency**	60.00
			30–320 Hz	The output voltage reaches its maximum rated value P11.3 with the cut-off frequency. For example: 400V at 50 Hz If the maximum output frequency (P6.4) is set to higher values, the output voltage remains constant as of the cut-off frequency defined here As of this cut-off frequency, the voltage/frequency ratio is no longer constant. The magnetization of the connected motor is reduced with increasing frequency (field weakening range) **Example: Linear V/Hz Characteristic Curve with Cut-Off Frequency and Field Weakening Range** 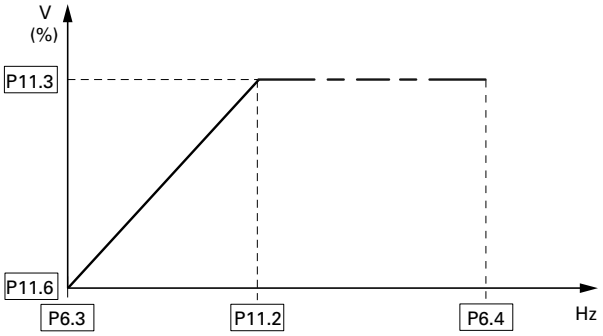 	
P11.3	603	X	—	**Output voltage**	100.00
			10–200%	Input voltage In the standard application, the value set here is equal to 100% of the input voltage supply and corresponding with the nominal motor voltage set under P7.5 (see the motor ratings plate)	

V/Hz-Characteristic Curve, continued

PNU	ID	Access RUN	Value/Range	Description	Factory Setting (P1.3)
P11.4	604	X	—	**V/Hz characteristic curve, mean frequency value**	60.00
			0.00–P11.2 (Hz)	Definition of a frequency value for the voltage value set under P11.5 Defined ratio (break-point) for the defined V/Hz-characteristic curve (P11.1 = 2, see characteristic P11.1 = 2)	
P11.5	605	X	—	**V/Hz characteristic curve, mean voltage value**	100.00
			0.00–P11.3	Definition of a voltage value for the frequency value set under P11.4 Defined ratio (break-point) for the defined V/Hz-characteristic curve (P11.1 = 2, see characteristic P11.1 = 2)	
P11.6	606	X	—	**Output voltage at 0 Hz**	0.00
			0.00–40.00%	Definition of a start voltage at 0 Hz (zero frequency voltage) **Note:** A high start voltage enables a high torque at the start ⚠ **Caution:** A high torque at low speed causes a high thermal load on the motor. If temperatures are too high, the motor should be equipped with an external fan	
P11.7	109	X	—	**Torque increase**	0
			0	Deactivated	
			1	Enabled Automatic increase of the output voltage (Boost) with an increased load and low speed (for example, heavy starting duty) ⚠ **Caution:** A high torque at low speed leads to a high thermal load on the motor **Note:** If temperatures are too high, the motor should be fitted with an external fan	
P11.8	600	X	—	**Control mode**	0
			0	Frequency control (V/Hz) The setpoint entry controls the output frequency of the frequency inverter (resolution of the output frequency = 0.01 Hz) **Note:** In this mode, multiple motors, with varying outputs, can be connected in parallel in the output of the frequency inverter	
			1	Speed control with slip compensation (vector) The setpoint entry controls the motor speed depending on the load torque (calculation by motor model) **Note:** In this mode, only one motor with the assigned power (current) may connected in the output of the frequency inverter **Note: The speed control requires a precise electrical reproduction of the connected motor.** The motor ratings plate information must be set in the parameter group P7 in this case	

On the constant three-phase AC supply, the three-phase asynchronous motor has a constant rotor speed (n_1, P7.3, rating plate specifications) according to the number of pole pairs and input frequency. The slip here represents the difference between the rotating field of the stator and that of the rotor. In static operation, the slip is constant.

Load changes **[1]** at the motor shaft cause a larger slip (△n) and thus a reduced rotor speed **[2]**. In controlled operation (V/f-characteristic), the frequency inverter cannot compensate this load-related speed difference. The speed behavior of the motor is even, as in a constant AC supply.

Speed Behavior without Slip Compensation

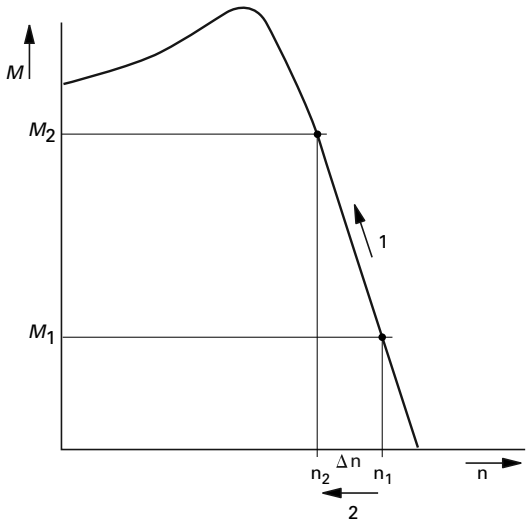

In "Speed control" mode (P11.8 = 1), the frequency inverter can compensate these load-related deviations. From the measured voltage and current values of the stator winding (u_1, i_1) the internal motor model calculates the required manipulated variables for the flux variable i_μ and the torque variable i_W. In the equivalent circuit diagram of the three-phase motor, the load-related slip is shown as the resistance R'_2/s. In idle operation without a load, this resistance approaches infinity, and approaches zero as the load increases.

Equivalent Circuit Diagram for an Asynchronous Motor

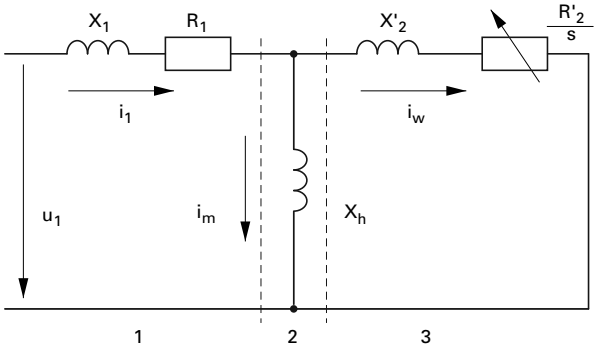

Item Number	Description
1	Stator winding
2	Air gap
3	Transformed rotor winding

An exact calculation requires the precise rating specifications of the motor (parameter group 7). The speed control (P11.8 = 1) can then compensate the load-related slip deviations. The simple illustration shows that, as the load torque increases **[1]**, the resulting speed reduction is compensated by an increase in the output frequency **[2]** (see figure below).

Speed Behavior with Slip Compensation

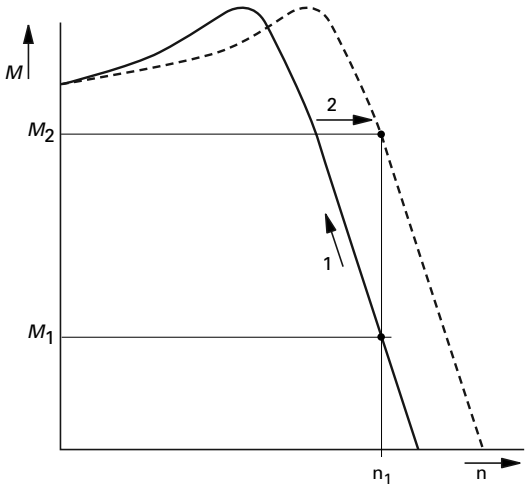

V/Hz-Characteristic Curve, continued

PNU	ID	Access RUN	Value/Range	Description	Factory Setting (P1.3)
P11.9	601	X	—	**Carrier frequency**	6.0
			1.5–16.0 kHz	Using a high switching frequency can reduce the magnetization noise in the motor The heat dissipation in the inverter (IGBT) increases with higher switching frequencies With motor frequencies <5 Hz a higher speed stability can be achieved at low switching frequencies **Note:** As a protection against thermal overload, MMX reduces the switching frequency automatically if, for example, too high values are set and with high ambient temperatures and high load currents Parameter P11.10 = 1 must be set for operation at a constant carrier frequency	
P11.10	522	X	—	**Sine-wave filter (constant carrier frequency)**	0
			0	Deactivated	
			1	Enabled **Note:** When using a sinusoidal filter, the carrier frequency must be constant	

Braking (P12)

In parameter group P12 you can set different brake functions:

- DC braking
- Generative braking (brake chopper)
- Mechanical braking (actuation)

The brake functions allow you to reduce undesired coasting and long coasting times. Mechanical braking also ensures safe operating states.

DC Braking

With DC braking, the frequency inverter supplies the three-phase stator winding of the three-phase motor with DC current. This generates a stationary magnetic field which in turn induces voltage in the rotor while the rotor is in motion. As the electrical resistance of the rotor is very low, even small induction can generate high rotor currents and thus a strong braking effect.

As the speed decreases, the frequency of the induced voltage reduces and therefore the inductive resistance also. The ohmic resistance becomes more effective and thus increases the braking effect. However, the generated braking torque drops off abruptly before the rotor is at a standstill and disappears completely as soon as the rotor movement has ended.

DC braking is therefore not suitable for holding loads, nor for intermediate braking. Once DC braking has been activated, the motor comes to a standstill.

CAUTION

Debounced inputs may not be used in the safety circuit diagram. DC braking results in additional heating of the motor. Configure the brake torque, set via braking current (P12.1) and the braking duration (P12.2 and P12.4), as low as possible.

Braking

PNU	ID	Access RUN	Value/Range	Description	Factory Setting (P1.3)
P12.1	507	X	—	**DC braking, current**	I_e
			0.2 x I_e–2 x I_e (A)	Set value for the DC current, which supplies the motor during the DC braking The value depends on the rated operational current I_e of the frequency inverter The parameter is only active, if a value >0 has been entered for P12.2 or P12.4	
P12.2	516	X	—	**DC braking, braking time at start**	0.00
			0.00–600.00s	The braking time of the DC braking **[1]** is activated with the start command (FWD, REV)	

Braking Time at Start

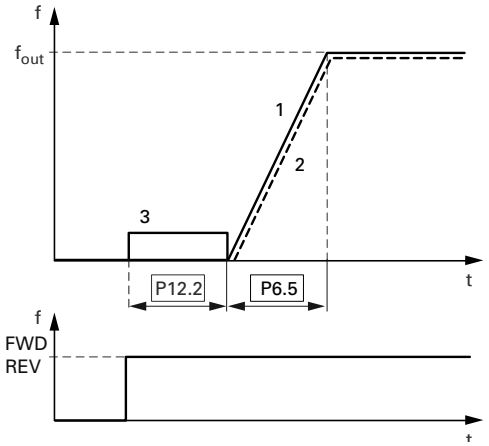

After the time set has elapsed, the frequency inverter starts automatically with the acceleration time set at P6.5. The speed of the motor **[2]** follows the characteristic of the output frequency **[3]**

Braking, continued

PNU	ID	Access RUN	Value/Range	Description	Factory Setting (P1.3)
P12.3	515	X	—	**DC braking, start frequency**	1.50
			0.00–10.00 Hz	The output frequency (f_{Out}) set here automatically activates the DC braking after a stop command (FWD/REV switched off) Requirement: P6.8 = 1 (Stop function ramp) The output frequency **[1]** is reduced after the stop command according to the deceleration time set at P6.6. Depending on inertia and the load torque, the speed of the motor **[2]** is reduced accordingly and braked with DC current at the frequency value set here You can set the duration of the DC braking **[3]** under P12.4	

Start Frequency During Relay Ramp

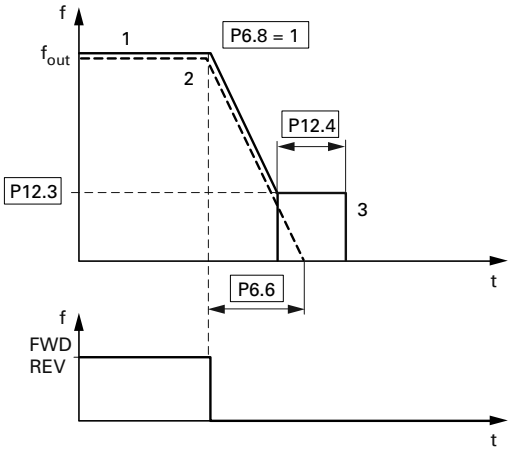

Braking, continued

PNU	ID	Access RUN	Value/Range	Description	Factory Setting (P1.3)
P12.4	508	X	—	**DC braking, braking time at STOP**	0.00
			0.00–600.00s	Duration of DC braking after the stop command With P6.8 = 1 (Stop function ramp), the activation of the DC braking occurs with the output frequency set under P12.3 with the braking time set here With P6.8 = 0 (free run-out), the activation of the DC braking **[3]** occurs directly with the stop command. If the output frequency **[1]** is greater than or equal to the rated motor frequency (P7.6), the value set here is considered for the duration of the braking time If the output frequency is less than or equal to 1% of the rated motor frequency (P7.6), the duration for DC braking is reduced respectively to 10% of the value set here	

Braking Time in Case of Stopping

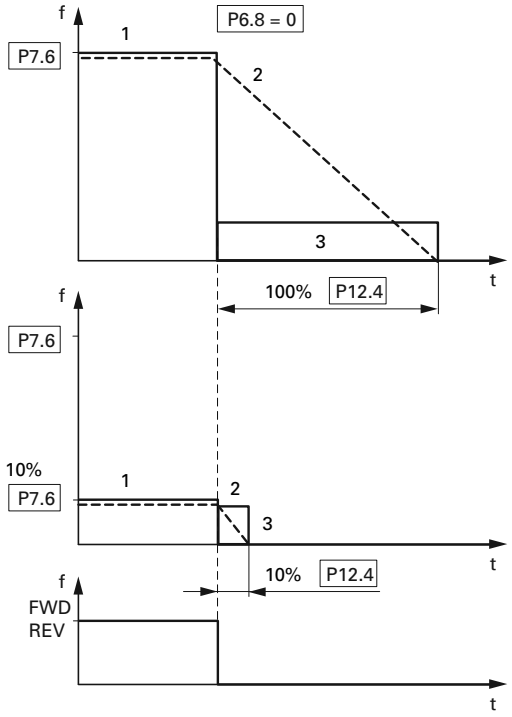

Regenerative Braking

If the rotor of an asynchronous motor is driven oversynchronously in the direction of the rotating field, it generates electric power via its stator windings. The motor becomes a generator. In the frequency inverter, this generative energy causes an increase in the DC link voltage.

Oversynchronous speeds occur, for example, when the output frequency in frequency inverter operation is reduced with short deceleration times, the connected machine has a large flywheel mass, or when the flowing medium in pumps and fans works against the speed reduction.

The rise in the DC link voltage is monitored by the M-Max frequency inverter and always enables a braking torque of around 30% of the motor rated torque. A higher braking torque can be achieved by selecting a more powerful frequency inverter. From the 1.1 kW (3.3A at 400V = MMX34AA3D3_) rating, the internal brake chopper with an external power resistor enables up to 100% of the rated motor torque.

Regenerative Braking with External Braking Resistor

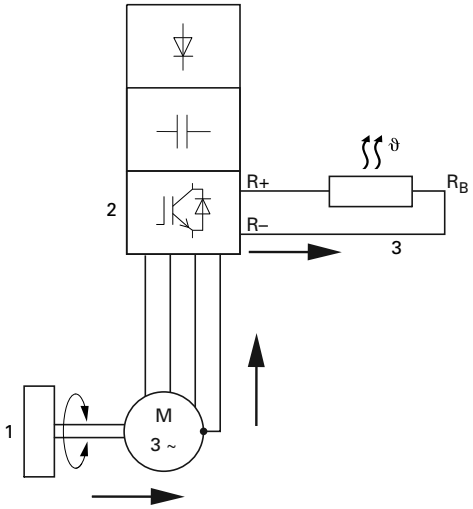

Item Number	Description
1	Machine flywheel mass
2	Inverter with brake chopper (brake transistor)
3	Brake resistor (RB) See Energy Flow (brake torque)

The brake chopper can be activated at parameter P12.5. This function is only activated with the three-phase frequency inverters MMX34…3D3_ (3.3A) to MMX34…014_ (14A). These ratings have an internal brake transistor that can dissipate excess brake energy via an external power resistor (connection terminals R+ and R–) when large flywheel masses or short deceleration times are involved.

This parameter is not visible with frequency inverters without a braking transistor.

Braking, continued

PNU	ID	Access RUN	Value/Range	Description	Factory Setting (P1.3)
P12.5	504	X	—	**Brake chopper**	0
			0	Brake-chopper deactivated	
			1	Automatic activation in operation (RUN)	
			2	Automatic activation in operation (RUN) and upon stop (STOP)	
P12.6	1447	X	—	**Brake chopper, DC bus switching threshold**	765
			0–870V	This function is only active with the three-phase frequency inverters MMX34…3D3_ (3.3A) to MMX34…014_ (14A) The switching threshold for the brake transistor should always be above the maximum DC link voltage For example, allowing for the maximum permissible input voltage peak of 10%: U_{LN} = 400 Vac U_{LN} +10% = 400 Vac = 440 Vac U_{DC} = 1.35 x U_{LNmax} = 1.35 x 440V = 594 Vdc (maximum permissible DC link voltage in motor operation) Allowing for an energy absorption from the DC link of around 30% during braking, the on threshold here for the braking transistor should be set to around 780V **Note:** Lower values for the on threshold will switch on the braking resistor earlier so that it is subject to a greater load The DC link voltage is shown at M1.8. In practice, the value of the DC link voltage is around 565V at U_{LN} = 400V	

Mechanical Brake (Actuation)

The actuation of an external mechanical brake can be implemented via one of the digital outputs (see "Digital Outputs (P5)" on **Page 78**), if the value 26 (= External brake actuated) is assigned:

- Transistor output DO: control signal terminal 20 (DO–), supply voltage control signal terminal 13 (DO+), maximum 48 Vdc/50 mA, Parameter 5.3
- Relay RO1: N/O contact control signal terminal 22 (R13) and 23 (R14), maximum 250 Vac/2A or 250 Vdc/0.4A, Parameter P5.1
- Relay RO2: changeover contact, control signal terminal 25 (R21), 24 (R22) and 26 (R24), maximum 250 Vac/2A or 250 Vdc/0.4A, Parameter P5.2

Mechanical Brake

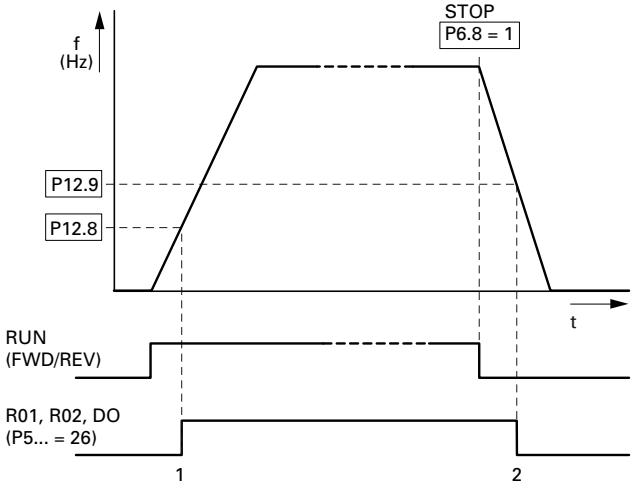

Item Number	Description
1	Brake, released
2	Brake activates and brakes the drive mechanically

Braking, continued

PNU	ID	Access RUN	Value/Range	Description	Factory Setting (P1.3)
P12.7	1448	X	—	**External brake, delay time opening**	0.2
			0.00–320.00s	Condition: RUN (Start enable) After the time set here has elapsed, the brake is actuated (P5._ is opened)	
P12.8	1449	X	—	**External brake, frequency threshold opening**	1.50
			0.00–P6.4 Hz	Condition: RUN (Start enable) If the frequency set here is exceeded, the brake is actuated (P5._is opened)	
P12.9	1450	X	—	**External brake, frequency threshold closing**	1.50
			0.00–P6.4 Hz	If the frequency goes below the value set here, the brake is actuated (P5._ is closed)	
P12.10	1451	X	—	**External brake, frequency threshold REV closing**	1.50
			0.00–P6.4 Hz	—	
P12.11	1452	X	—	**External brake, current limit, opening**	0.00
			0.00–P7.2A	Condition: RUN (Start enable) On reaching the current value set here, the brake is actuated (P5._ is opened)	

Logic Function (P13)

The logic function enables you to link both parameters P13.1 **(A)** and P13.2 **(B)** logically with each other. The result (LOG) can then be assigned to the digital outputs DO (P5.3), RO1 (P5.1) and RO2 (P5.2). The type of operation (And, Or, Exclusive-Or) is defined in parameter P13.3.

Logic Linking of A and B

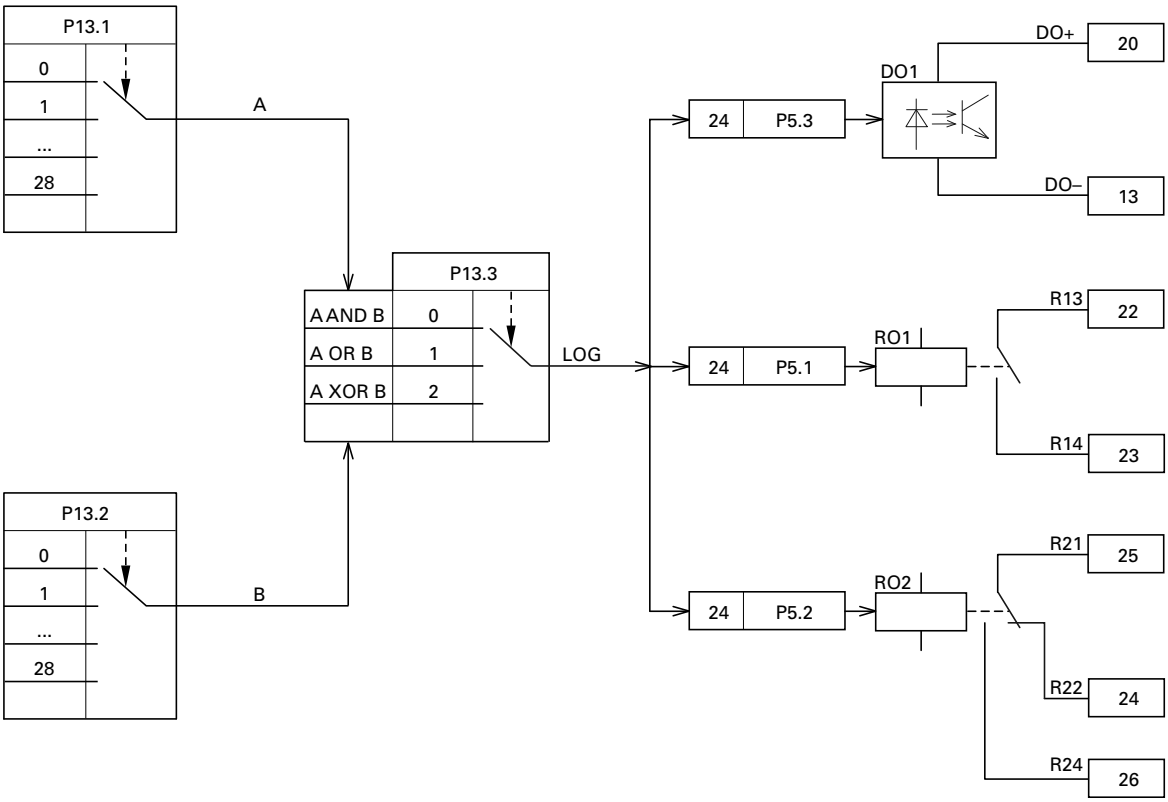

Example: Digital output RO1 (N/O contact R13/R14) is required to indicate during operation that the set current limit has been reached:

P5.1 = 24, LOG function fulfilled
P13.1 = 2, Operation (RUN), signal A
P13.2 =27, Current monitoring, signal B
P13.3 = 0, A AND B

Logic Function

PNU	ID	Access RUN	Value/Range	Description	Factory Setting (P1.3)
P13.1	1453	X	—	**LOG function, Selection input A**	0
				Value range for signal A	
			0	Deactivated	
			1	READY, the frequency inverter is ready for operation	
			2	RUN, the inverter of the frequency inverter is enabled (FWD, REV)	
			3	FAULT, error message Error detected (= STOP)	
			4	Error message inverted (no error message)	
			5	ALARM, warning message (see "Protective Functions (P8)" on **Page 90**)	
			6	REV (Reverse run), anticlockwise rotating field active	
			7	Output frequency = frequency setpoint	
			8	Motor controller active	
			9	Zero frequency Output frequency = 0 (Hz)	
			10	Frequency monitoring 1 For the frequency ranges set at P5.4 and P5.5	
			11	Frequency monitoring 2 For the frequency ranges set at P5.6 and P5.7	
			12	PID monitoring For the deviation set at P9.17	
			13	Overtemperature signal	
			14	Overcurrent control active	
			15	Overvoltage control active	
			16	PLC Sequence control active	
			17	PLC Sequence control, single step completed	
			18	PLC Sequence control, program cycle completed	
			19	PLC Sequence control, pause	
			20	Counter, value 1 reached The counter value is ≧ the trigger value set at P3.21 and can be reset by activating P3.24	
			21	Counter, value 2 reached The counter value is ≧ the trigger value set at P3.22 and can be reset by activating P3.24	
			22	RUN message active	
			23	Analog minimum reference error Message, AL 50 if the value of AI1 and/or AI2 goes below the 4 mA or 2V setpoint value (live zero) (P2.1 = 1, P2.5 = 1)	

Values continued on next page

Logic Function, continued

PNU	ID	Access RUN	Value/Range	Description	Factory Setting (P1.3)
			24	LOG function fulfilled Message if the logical operation of P13.3 is fulfilled (LOG = 1)	
			25	PID controller, actual value monitoring Message if the actual value is within the hysteresis set at P9.15 and P9.16	
			26	External brake actuated Switch threshold: set value of P12.8	
			27	Current monitoring Switch threshold: set value of P5.8	
			28	Fieldbus, Remote output The number of the assigned digital output is written directly to the control word (ID2001, bit 13)	
P13.2	1454	X	—	**LOG function, Selection input B**	0
			Like P13.1	—	
P13.3	1455	X	—	**LOG function, select operation**	0

Logical operation (LOG) of the selected functions of parameter P13.1 (A) and P13.2 (B)

Signal		Logic Link (LOG)		
A	**B**	**AND**	**OR**	**XOR (Exclusive or)**
0	0	0	0	0
0	1	0	1	1
1	0	0	1	1
1	1	1	1	0

The result of the logic operation (LOG) can be assigned to one of the three digital outputs (DO = P5.3), RO1 = P5.1 and RO2 = P5.2 with the value 24, or called via the serial interface (RS485, Modbus RTU) or an optional fieldbus connection (CANopen, PROFIBUS DP)

			0	A AND B
			1	A OR B
			2	A XOR B, exclusive A or B

Second Parameter Set (P14)

The selected parameters for a second motor are combined in parameter group P14. This enables the alternative operation of two motors at the output of the frequency inverter, even with different rating specifications.

In the factory setting, the parameters of this second parameter set (P14) are identical to the factory settings of the basic parameters (first parameter set) and described in the relevant sections:

- P14.1–P14.6 = P7.1–P7.6 (motor)
- P14.7–P14.10 = P6.3–P6.6 (drives control)
- P14.11 = P11.1, P14.12 = P11.7 (V/f control)
- P14.13–P14.16 = P8.6–P8.9 (protection function)

Second Parameter Set

PNU	ID	Access RUN	Value/Range	Description	Factory Setting (P1.3)
P14.1	1347	X	—	**Motor rated current (2PS)**	I_e
			0.2 x I_e–2 x I_e	Ie = Rated operational current of the frequency inverter (See motor rating plate)	
P14.2	1352	X	—	**Current limit (2PS)**	1.5 x I_e
			0.2 x I_e–2 x I_e	1.5 x I_e	
P14.3	1350	X	—	**Motor rated speed (2PS)**	①
			300–20,000 RPM	(See motor nameplate)	
P14.4	1351	X	—	**Motor power factor (cos φ) (2PS)**	①
			0.30–1.00	(See motor nameplate)	
P14.5	1348	X	—	**Motor rated operating voltage (2PS)**	①
			180–676V	(See motor nameplate) Pay attention to the supply voltage and the type of circuit in the stator winding	
P14.6	1349	X	—	**Motor nominal frequency (2PS)**	60.00
			30–320 Hz	(See motor rating plate)	
P14.7	1343	X	—	**Minimum frequency (2PS)**	0.00
			0.00–P14.8 Hz	—	
P14.8	1344	X	—	**Maximum frequency (2PS)**	60.00
			P14.7–320 Hz	—	
P14.9	1345	✓	—	**Acceleration time (2PS) (acc3)**	3.0
			0.1–3000s	—	
P14.10	1346	✓	—	**Deceleration time (2PS) (dec3)**	3.0
			0.1–3000s	—	

Note

① Default values vary based on actual unit ratings.

Second Parameter Set, continued

PNU	ID	Access RUN	Value/Range	Description	Factory Setting (P1.3)
P14.11	1355	X	—	**V/Hz characteristic curve (2PS)**	0
				(See "P11.1" on **Page 107**)	
			0	Linear	
			1	Squared	
			2	Configurable	
P14.12	1354	X	—	**Torque increase (2PS)**	0
			0	Deactivated	
			1	Enabled Automatic increase of the output voltage (Boost) with an increased load and low speed (for example, heavy starting duty) ⚠ **Caution:** A high torque at low speed leads to a high thermal load on the motor **Note:** If temperatures are too high, the motor should be fitted with a fan	
P14.13	1353	X	—	**Motor temperature protection (2PS)**	2
				The motor temperature protection is designed to protect the motor from overheating. It is based on a temperature algorithm and uses the motor current (P14.1) to determine the motor load (see "Motor Heat Protection (P8.6–P8.9)" on **Page 92**)	
			0	Deactivated	
			1	Alarm (AL16)	
			2	Fault (F… 16), stop function according to P6.8	
P14.14	1469	X	—	**Motor ambient temperature (2PS)**	40
			–20° to 100°C	—	
P14.15	1470	X	—	**Motor cooling factor at zero frequency (2PS)**	40.0
			0.0–150%	The cooling factor of the motor at zero frequency defines the ratio for cooling the motor at the rated frequency with the rated operational current without an external fan (see figure on **Page 88**)	
P14.16	1471	X	—	**Motor thermal time constant (2PS)**	45
			1–200 min	The temperature time constant determines the time-span in which the heat calculation model achieves 63% of its end value. It depends on the design of the motor and is different from manufacturer to manufacturer. The larger the motor design, the greater the time constant	

The following examples show two practical applications for the second parameter set.

Example 1

Roller conveyor with rotary table:

- Motor M1 (0.75 kW) drives the rollers on the rotary table and transports the goods further
- Motor M2 (1.5 kW) rotates the table for the alternating acceptance of goods from two feed lines

Roller Conveyor with Rotary Table

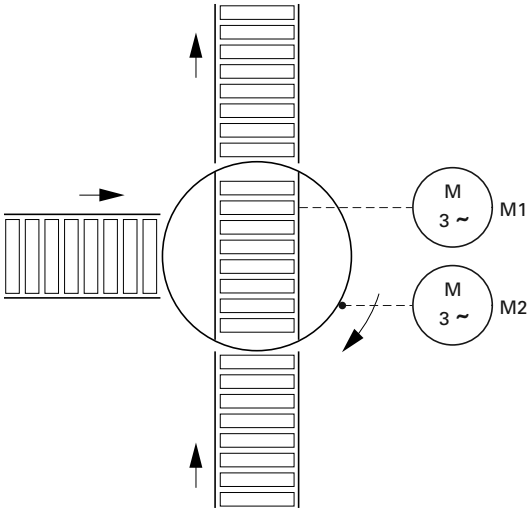

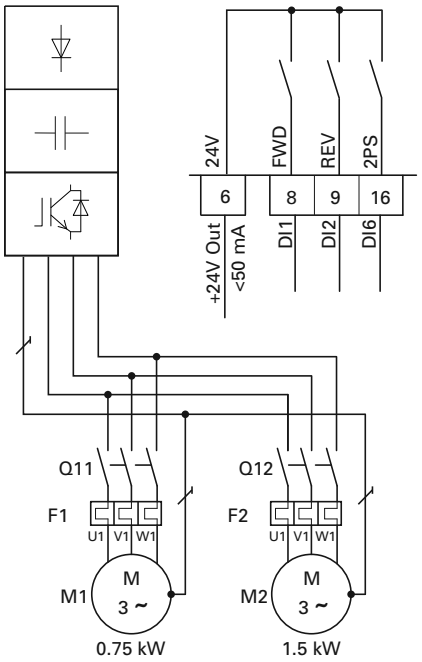

For alternating operation (rotary movement "exclusive or" of the transport rollers) on the rotary table, a frequency inverter for the largest connected load (MMX34AA4D3_) was selected.

The different rating data of the motors were set in the parameter groups P7 (for motor M1) and P14 (for motor M2). The second parameter set (P14) is activated here as an example via digital input DI6 (P3.27 = 6).

The change between the two motors is implemented in this example via contactors Q11 (M1) and Q12 (M2) at standstill. The enabling and selection of the relevant parameter group is activated via the digital inputs:

- Motor M1 = DI1 (FWD, control signal terminal 8) operation with parameter group P7
- Motor M2 = DI1 (FWD, control signal terminal 8) and DI6 (2PS, control signal terminal 16) operation with parameter group P14 (second parameter set)

During maintenance and setting work the following applies for reversing duty:

- Motor M1 = DI2 (REV, control signal terminal 9) operation with parameter group P7
- Motor M2 = DI2 (REV, control signal terminal 9) and DI6 (2PS, control signal terminal 16) operation with parameter group P14 (second parameter set)

Digital input DI6 is assigned in the factory setting (P3.12 = 6) with the function PI-OFF (PID controller, deactivated). Setting P3.12 = 0 is used to switch off this function of DI6. Setting P3.27 = 6 enables the second parameter set (2PS) function to be assigned to digital input DI6.

Example 2

Stop function with two different deceleration times.

Stop Function with Two Different Deceleration Times

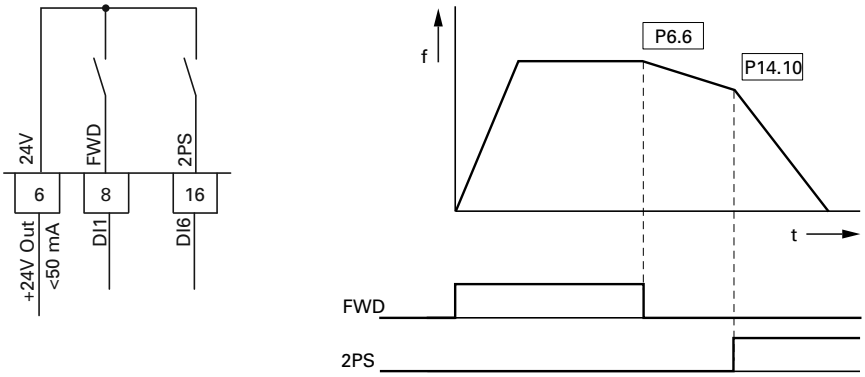

The Stop function with deceleration time can be activated with parameter P6.8 = 1. If the enable signal on the digital input DI1 (FWD, control signal terminal 8) is switched off, the output frequency of the frequency inverter can be reduced according to the deceleration time (dec1) set at P6.6.

The second parameter set (2PS) enables you to set at P14.10 a different value to dec1 or dec2. For example, the second parameter set (P14) is activated here via digital input DI6 (P3.27 = 6). Activating DI6 causes the output frequency to be reduced according to the deceleration time (dec3) set at P14.10.

CAUTION

Debounced inputs may not be used in the safety circuit diagram.

The motor parameters must be identical in both parameter groups (P7 and P14).

Digital input 6 is assigned in the factory setting (P3.12 = 6) with the function PI-OFF (PID controller, deactivated). With P3.12 = 0 you can remove this function (PI-OFF) from digital input 6.

System Parameter

The system parameters (S parameters) inform the user of device-specific settings.

The S parameters are not visible (i.e. hidden), as long as you have activated the quick start assistant (P1.1 = 1, see "Parameter Menu (PAR)" on **Page 64**).

System Parameter

PNU	ID	Access RUN	Value/Range	Description	Factory Setting (P1.3)
Hard- and Software Information					
S1.1	833	X	xx	**API SW ID (control section software ID)**	—
S1.2	834	X	x	**API SW Version (control section software version)**	—
S1.3	835	X	x	**Power SW ID (power section software ID)**	—
S1.4	836	X	xx	**Power SW Version (power section software version)**	—
S1.5	837	X	90xx	**Application ID**	—
S1.6	838	X	x.xx	**Application revision**	—
S1.7	839	X	xx	**System load**	—
				Load as percentage [%]	
Communication Information on Interface RS485 (Control Signal Terminals A, B)					
S2.1①	808 ①	X	—	**Communication status**	0.000 ①
				xx = Number of error messages (0–64)	
				yyy = Number of correct messages (0–999)	
S2.2①	809 ①	✓	—	**Fieldbus protocol**	0 ①
			0	Fieldbus deactivated	
			1	Modbus RTU	
S2.3①	810 ①	✓	—	**Slave address**	1 ①
			1–255	—	
S2.4①	811 ①	✓	—	**Baud rate**	5 ①
				Transfer rate (1 Baud = 1 symbol per second)	
				The baud rate must be equal on the send and receive sides	
			0	= 300 Baud	
			1	= 600 Baud	
			2	= 1200 Baud (1.2k Baud)	
			3	= 2400 Baud (2.4k Baud)	
			4	= 4800 Baud (4.8k Baud)	
			5	= 9600 Baud (9.6k Baud)	
			6	= 19200 Baud (19.2k Baud)	
			7	= 38400 Baud (38.4k Baud)	
			8	= 57600 Baud (57.6k Baud)	

Note

① With a fieldbus connection (option, for example, CANopen, PROFIBUS DP, and so on) modified ID numbers and different factory settings are stored here. Detailed information is provided in the specific manuals of the relevant fieldbus interface card.

System Parameter, continued

PNU	ID	Access RUN	Value/Range	Description	Factory Setting (P1.3)
S2.6	813	✓	—	**Parity type**	0
			0	None	
			1	Even	
			2	Odd	
S2.7	814	✓	—	**Communication timeout**	0
			0	= Not used	
			1	= 1s	
			2	= 2s	
			…255	= up to 255s	
S2.8	815	✓	—	**Reset communication status**	
			0	= Not used	
			1	= Resets parameter S2.1	
Unit Counter					
S3.1	827	X	—	**MWh counter**	0.00
S3.2	828	X	—	**Operating days (d)**	0
S3.3	829	X	—	**Operating hours (h)**	0
S3.4	840	X	0–0000	**RUN counter, days**	—
S3.5	841	X	0–24	**RUN counter, hours**	—
S3.6	842	X	0– 0000	**Fault/alarm counter**	—
User Set					
S4.1	830	✓	0–15	**Display contrast**	15
S4.2	831	X	—	**Restore factory defaults**	0
			0	= Factory setting or changed value (user setting for parameter)	
			1	= Restores factory settings for all parameters	
S4.3	832	✓	—	**Password**	0000
				The password protection applies to all parameters Password forgotten (see "Service and Warranty" on **Page 17**) Setting a password requires user to select a value and confirm value a second time. Password protection can be disabled by inputting the password value into parameter S4.3 after it has been set. All other parameter changes will require the password before the user can modify.	
			0000	Deactivated	
			0001–9999	Activated, set individual password	

Operational Data Indicator (MON)

By applying the specified supply voltage (L1, L2/N, L3), the LCD display is illuminated (= Power ON) and all segments are shown briefly. The parameter number (M1.1) and the respective display value (0.00) are then displayed automatically in alternating sequence.

Operational Data Indicator

You can use the MON (Monitor) menu level to select the desired operational data indicator (parameter number M_) with the arrow buttons ∧ and ∨. The parameter number and the display value are shown in alternation automatically, and the display can be fixed on the selected display value with the OK button. If you wish to access a different operational data indicator, press the OK button once again. You can then make the selection with the arrow buttons ∧ and ∨ and confirm with the OK button. The appropriate unit is shown under the respective operational data indicator.

The values of the operating data display cannot be changed by hand (i.e. by value entry).

You can select operational data indicators during operation (RUN).

Operational Data Indicator

PNU	ID	Designation	Display Value	Unit	Description
M1.1	1	Output frequency	0.00	Hz	Frequency to motor
M1.2	25	Frequency reference value	0.00	Hz	Frequency reference value
M1.3	2	Motor shaft speed	0	RPM	Calculated speed of the motor (RPM) ①
M1.4	3	Motor current	0.00	A	Measured motor current
M1.5	4	Motor torque	0.0	%	Calculated ratio of torque to rated torque of the motor ①
M1.6	5	Motor power	0.0	%	Calculated ratio of actual output power to rated motor output ①
M1.7	6	Motor voltage	0.0	V	Measured output voltage to motor
M1.8	7	DC bus voltage	000	V	Measured intermediate circuit voltage (depending on the supply voltage)
M1.9	8	Unit temperature	00	°F (°C)	Measured heat sink temperature
M1.10	9	Motor temperature	0	%	% (calculated value) ②
M1.11	13	Analog input 1	0.0	%	Value on AI1
M1.12	14	Analog input 2	0.0	%	Value on AI2
M1.13	26	Analog output 1	0.0	%	Value on AO1
M1.14	15	Digital input	0	—	Status DI1, DI2, DI3 (see "Example of Status Displays" on **Page 128**)

Notes

① The calculated motor data (M1.3, M1.5 and M1.6) is based on the values entered in parameter group P7 (see "Motor (P7)" on **Page 88**).

② The calculated motor temperature (M1.10) considers the temperature model of the protection function in parameter group P8 (see "Protective Functions (P8)" on **Page 90**).

Operational Data Indicator, continued

PNU	ID	Designation	Display Value	Unit	Description
M1.15	16	Digital input	0	—	Status DI4, DI5, DI6 (see "Example of Status Displays" on **Page 128**)
M1.16	17	Digital output	1	—	Status RO1, RO2, DO (see "Example of Status Displays" on **Page 128**)
M1.17	20	PID reference value	0.0	%	Percentage of maximum setpoint
M1.18	21	PID feedback	0.0	%	Percentage of maximum actual value
M1.19	22	PID error value	0.0	%	Percentage of maximum fault value
M1.20	23	PID output	0.0	%	Percentage of maximum output value
M1.21	1480	Counter, digital input	0	—	Number of actuations of a digital input (DI1–DI6) assigned at P3.23. The reset command for the counter is set at P3.24

Under the system parameters S3.1 to S4.1 (see "System Parameter" on **Page 125**) you can also display the operational data of the M-Max frequency inverter and adjust the contrast of the display unit.

Example of Status Displays

The status displays of the digital inputs and outputs are equivalent. These make it possible to check for whether an output control signal (for example, from an external controller) of the inputs (DI1 to DI6) activates the frequency inverter. This provides you with a simple means for checking the wiring (wire breakage).

The following table shows a few examples.

Display value:

- 1 = activated = High
- 0 = not activated = Low

Status Displays Examples

PNU	ID	Display Value	Description
M1.14	15	0	No digital input (DI1, DI2, DI3) is actuated
		1	Control signal terminal 10 is actuated (DI3)
		10	Control signal terminal 9 is actuated (DI2)
		100	Control signal terminal 8 is actuated (DI1)
		101	The control signal terminals 10 and 8 are actuated (DI3 + DI1)
		111	The control signal terminals 10 and 9 and 8 are actuated (DI3 + DI2 + DI1)
M1.15	16	1	Control signal terminal 14 is actuated (DI14)
		10	Control signal terminal 15 is actuated (DI15)
		100	Control signal terminal 16 is actuated (DI16)
M1.16	17	1	Transistor DO is actuated The transistor switches the voltage connected at control signal terminal 20 (DO+) to control signal terminal 13 (DO–)
		10	Relay RO2 is actuated The control signal terminals 25 (R21) and 26 (R24) are connected (closed changeover contact)
		100	Relay RO1 is actuated N/O contact, control signal terminal 22 (R13) and 23 (R14) is closed

Setpoint Input (REF)

REF: Setpoint value definition (Reference) via the operating unit.

The settings of the frequency setpoint via the keypad have the same effect as the function of an electronic motor potentiometer. The set value is written in parameter P6.15 and can also be changed there. It is retained also with a disconnection of the supply voltage.

A frequency reference value that is set under REF is only effective with the KEYPAD control level activated.

The following table shows a good example of specifying the frequency setpoint value via the operating unit.

Setpoint Input (REF)

Sequence	Commands	Display	Description
1	LOC REM		Activate control level KEYPAD with the LOC/REM button. The arrow (◀) points to menu item REF
		READY RUN STOP ALARM FAULT REF MON PAR FLT 0.00 Hz FWD REV I/O KEYPAD BUS	Actuating the START button enables the RUN mode (rotating field direction FWD)
			The STOP button (P6.16 = 1) activates the STOP mode. The Stop function is set at parameter P6.8
2	OK	READY RUN STOP ALARM FAULT REF MON PAR FLT 0.00 FWD REV I/O KEYPAD BUS	Pressing the OK button activates the setpoint entry (right-hand segment flashing)
			The two arrow buttons (< or >) are used to select the entry digit (cursor)
			The arrow buttons ∧ or ∨ are used to select the value of the entry digit (0, 1, 2, …9, 0) **Note:** Changes in the frequency setpoint are only possible if the number display is flashing (Hz), even in RUN mode. The value is stored when the display is constant When the supply voltage is switched off, the last setpoint entered (see P6.15) and the KEYPAD mode are stored

Setpoint Input (REF), continued

Sequence	Commands	Display	Description
3		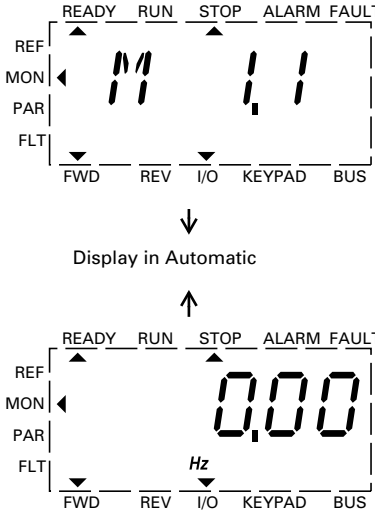	If the supply voltage is switched on with the KEYPAD control level set, the MON menu item is activated first. The set display value is shown in automatic alternation (factory setting: M.1.1 ⟷ 0.00 Hz)
	   		Actuate the BACK/RESET, ∧ and OK buttons in succession. The entry level is then reactivated (see sequence 2)
4	 		The two arrow buttons (< or >) are used to change the rotating direction (FWD, REV)
	FWD REV	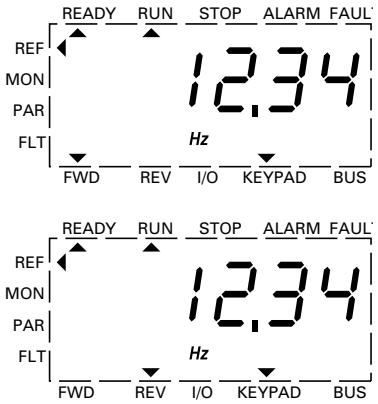	The rotating direction change is carried out in the factory setting (P6.14 = 0) with an automatic stop at 0 Hz. For a direct changeover (FWD/REV) you must set parameter P6.14 = 1 **Note:** The frequency of the REV rotating field direction is not displayed with a negative sign **Note:** When the setpoint entry is active (flashing number display), the arrow buttons are used to change the entry locations (cursor)

Serial Interface (Modbus RTU)

General Information About Modbus

Modbus is a centrally polled bus system in which a so-called master (PLC) controls the entire data transfer on the bus. Cross-traffic between the individual slaves is not possible.

Each data exchange is initiated only on request of the master. Only one request can be issued on the cable. A slave cannot initiate a transfer but only react to a request with a response.

Two types of dialog are possible between master and slave:

- The master sends a request to a slave and waits for a response
- The master sends a request to all slaves and does not wait for a response (broadcast)

More information on Modbus can be found under www.modbus.org.

Communications in a Modbus Network

Modbus Network with M-Max

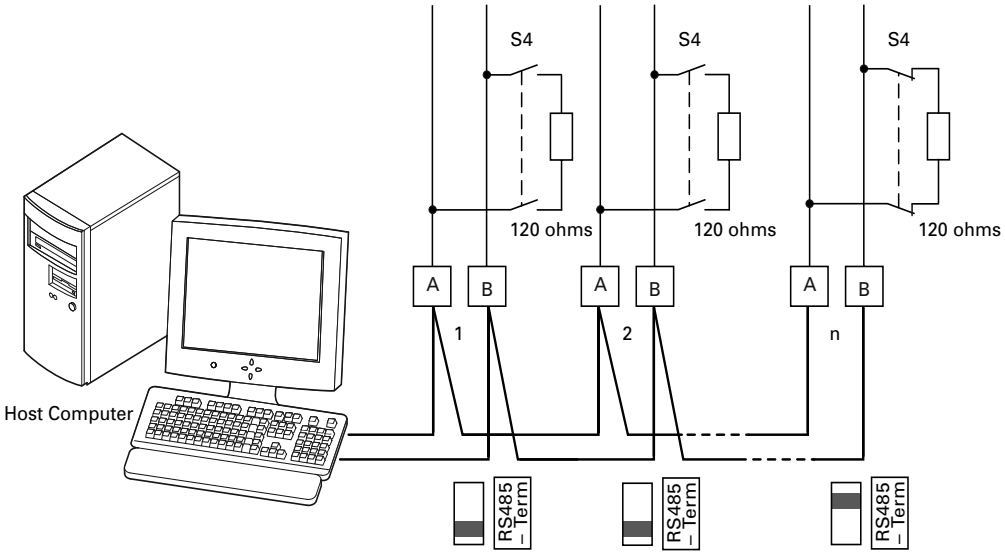

The figures shows a typical arrangement with a host computer (master) and any number (maximum 31 slaves) of frequency inverter M-Max (slaves). Each frequency inverter has a unique address in the network. This addressing is executed individually for each M-Max via system parameter S2.3 and is independent of the physical connection (position) in the network.

Serial Interface A-B

The electrical connection between master and the slaves connected in parallel is implemented via the serial interface A-B (A = negative, B = positive) with a shielded RS485 twisted pair cable.

The position of the connection terminals in the M-Max for the serial interface A-B (see figure on **Page 45**).

The M-Max's built-in RS-485 port supports the Modbus RTU protocol and therefore allows a direct network connection without an additional interface module.

The network cable must be provided at each physical end (last station) with a bus termination resistor (120 ohms) in order to prevent signal reflections and the resulting transfer errors. This necessary resistor is already integrated in the M-Max frequency inverter and is switched on via microswitch S4 (see figure on **Page 45**).

Modbus Parameters

The following table shows the Modbus parameters in the M-Max.

RUN Indicates the access during operation (FWD or REV)
X = No parameter change possible,
✓ = Parameter change possible.

ro/rw Indicates the access via the fieldbus
ro = Read only possible,
rw = Read and write possible.

Modbus Parameters in the M-Max

PNU	ID	Access RUN	Access ro/rw	Designation	Value Range	FS (P1.3)
S2.1	808 ①	X	**ro**	Communication status	Format xx.yyy **xx** = Number of received faulty messages (0–64) **yyy** = Number of received correct messages (0–999)	0.000 ①
S2.2	809 ①	✓	**rw**	Fieldbus protocol	**0** = Fieldbus deactivated **1** = Modbus	0 ①
S2.3	810 ①	✓	**rw**	Slave address	1–255	1 ①
S2.4	811 ①	✓	**rw**	Baud rate	**0** = 300 **1** = 600 **2** = 1200 (1.2k Baud) **3** = 2400 (2.4k Baud) **4** = 4800 (4.8k Baud) **5** = 9600 (9.6k Baud) **6** = 19200 (19.2k Baud) **7** = 38400 (38.4k Baud) **8** = 57600 (57.6k Baud)	5 ①
S2.6	813	✓	**rw**	Parity type	**0** = None I 2 Stop bits **1** = Even I 1 Stop bit **2** = Odd I 1 Stop bit	0
S2.7	814	✓	**rw**	Timeout up to fieldbus error (error 53) if no master messages are received although Modbus is still active.	**0** = Not used **1** = 1s **2** = 2s **...255** = up to 255s	0
S2.8	815	✓	**rw**	Reset communication status xx and yyy are reset to 0	**0** = Not used **1** = resets parameter S2.1	0
Drives Control						
P6.1	125	✓	**rw**	Control place 1	**1** = Control signal terminals (I/O) **2** = Control unit (KEYPAD) **3** = Interface (BUS)	1
P6.2	117	✓	**rw**	Setpoint Source	**0** = Fixed frequency (FF0) **1** = Control unit (KEYPAD) **2** = Interface (BUS) **3** = AI1 (analog setpoint 1) **4** = AI2 (analog setpoint 2)	3

Note

① When the fieldbus is connected (option, for example, CANopen, PROFIBUS DP, and so on) modified ID numbers and different factory settings are stored here. Detailed information is provided in the specific manuals of the relevant fieldbus interface module.

For Modbus to function at least the following parameters must be set:

PNU	Value	Notes
S2.2	1	To activate Modbus
S2.3	1–255	Set differently at each slave (MMX); 0 is used by the master for broadcasts
S2.4	0–8	Same setting at the master and slave
S2.6	0/1	Same setting at the master and slave
6.1	3	Fieldbus selected as a control level
6.2	2	Set setpoint value via the fieldbus; other setpoint sources also possible, fixed frequencies overlay all setpoint values, also a fieldbus setpoint value

Another requirement is that the arrow ▼ in the lower status line of the LCD display is pointing to BUS (adjustable via the LOC/REM button). The PLC (master) must also be provided with an RS485 serial interface and the necessary Modbus RTU driver software.

Operating Mode Modbus RTU

Operating mode Modbus RTU (Remote Terminal Unit) transfers the data in binary format (faster data rate) and determines the transfer format for the data request and the data response. Each message byte that is sent contains two hexadecimal characters (0 … 9, A … F).

The data transfer between a master (PLC) and the frequency inverter (M-Max) is carried out according to the following sequence:

Master request: the master sends a Modbus frame to the frequency inverter.

Slave response: the frequency inverter sends a Modbus frame as a response to the master.

Data Exchange Between Master and Slave

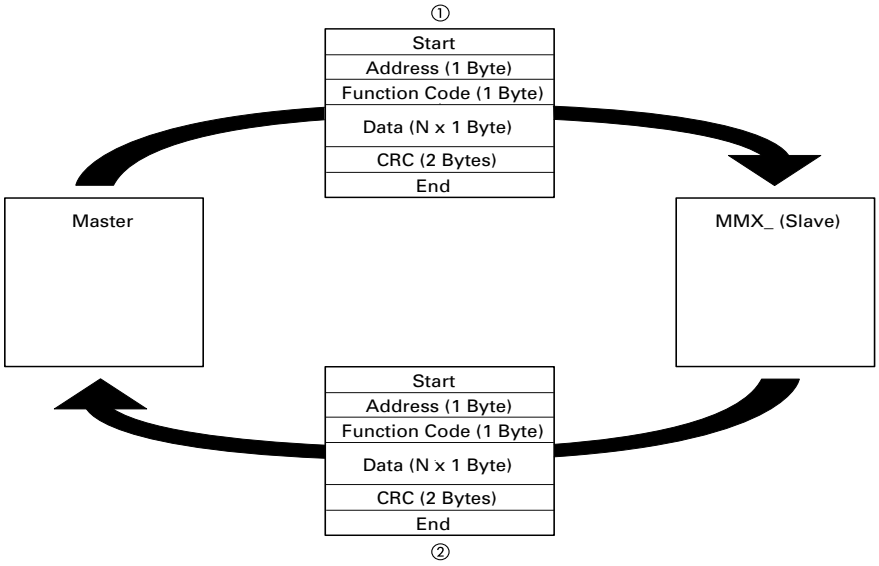

The frequency inverter (slave) only sends a response if it has received a request from the master beforehand.

Notes

① Master request.

② Slave response, not with broadcast.

Structure of the Master Request

Address:

- The address (1 to 255) of the frequency inverter to be sent the request is entered in parameter S2.3. Only the frequency inverter with this address can respond to the request
- Address 0 is used as a so-called Broadcast (message to all slaves) from the master. In this mode, individual slaves cannot be addressed and data cannot be output from the slaves

Function Code:

The function code defines the type of message. The following operations can be executed on the M-Max:

Function Code (hex)	Designation	Description
03	Read Holding Registers	Reading of the holding registers in the slave (process data, parameters, configuration) A master request enables up to 11 registers to be read
04	Read Input Registers	Reading of the input registers in the slave (process data, parameters, configuration) A master request enables up to 11 registers to be read
06	Write Single Register	Writing of a holding register in the slave With a general telegram (Broadcast) the appropriate holding registers are written in all slaves The register is read back for comparison
10	Write Multiple Register	Writing of several holding registers in the slave With a general telegram (Broadcast) the appropriate holding registers are written in all slaves A master request enables up to 11 registers to be read

Data

The length of the data block (Data: N x 1 Byte) depends on the function code. This consists of two hexadecimal character sets between 00 and FF. The data block contains additional information for the slave in order to carry out the operation defined by the master in the function code. Example: number of parameters to be processed.

CRC

The telegrams in the Modbus RTU have a CRC (Cyclical Redundancy Check). This CRC field consists of two bytes that contain a binary 16 bit value. The CRC check is always run independently of the parity check for the individual characters of the telegram. The CRC result is attached to the end of the telegram by the master. The slave recalculates while receiving the telegram and compares the calculated value with the actual value in the CRC field. If both values are not identical, an error is set.

Structure of the Slave Response
Required Transfer Time

- The time between receiving a request from the master and the response of the frequency inverter is at least 3.5 characters (rest time)
- Once the master has received a response from the frequency inverter, it must wait for at least the rest time before it can send a new request

Normal Slave Response

- If the master request contains a write register function (function code 06 or 16), the frequency inverter immediately returns the request as a response
- If the master request contains a read register function (function code 03 or 04), the frequency inverter returns the read data with the slave address and the function code as a response

Slave Response in the Event of an Error

If a request contains an error (for example, incorrect data address or incorrect data value) other than a transfer error, the frequency inverter returns an exception message without executing anything. You can evaluate the exception message

Structure of Exception Message

- Address (of the master request)
- Function code (of the master request): MSB is set to 1 (for example, with function code 06 = 1000 0110)
- Data field contains the error code (is described in the following table)
- CRC

Error Code Description

Exception Code	Meaning	Description
01	Illegal function	This function is not supported
02	Illegal data address	The address was not found
03	Illegal data value	The data format is not permissible or is incorrect
04	Slave device error	Occurrence of a non-regenerative error while the slave attempted to execute a slave response
06	Slave device busy	The slave has received the master request error-free. However, it is engaged in processing a lengthy command

Example:

Master request that contains a non-existent data address.

Master request: 01 06 0802 0001 EBAA (hex)

hex	Name
01	Slave address
06	Function code (here: Write a holding register)
0802	2050 (dec). The ID number of the written register is 2051 (dec) as the master PLC has an offset of +1
0001	Content (2 bytes) for register 42051: 0000 0000 0000 0001 (bin)
EBAA	CRC

Slave response: 01 86 02 C3A1 (hex)

hex	Name
01	Slave address
86	Function code (here: Write a holding register) MSB was set to 1
02	Error code: Stated address not found.
C3A1	CRC

No Slave Response:

In the following cases, the frequency inverter ignores the request and does not send a reply:

- On receiving a broadcast request
- If the request contains a transmission error
- If the slave address in the request does not match that of the frequency inverter
- With an invalid data length, (for example, reading of 12 registers) error message F08 is triggered in the MMX
- With a CRC or parity error
  With a CRC error the value of system parameter S2.1 is increased by 1 (xx = number of faulty messages)
- If the time interval between the messages is less than 3.5. characters

The master must be programmed to repeat the request if it does not receive a response within a specified time.

Data Storage with Modbus

The information is stored in one input and one holding register.

Register Numbers	Type	Name
30001–39999	Read only (ro = read only)	Input-register
40001–49999	Read/write (rw = Read/write)	Holding register

The registers are the memory location of the data. The memory size of each register is 1 word.

Modbus-Register-Mapping

The register mapping enables the processing in MMX of the content listed in the following table via Modbus RTU.

Group	Register Numbers	ID Range	Assignment of the ID Numbers
Display values	40001–40098 (30001–30098)	1...98	Parameter list: (see "Appendix A" starting on **Page 142**)
Failure code	40099 (30099)	99	Error list: (see "Error and Warning Messages" starting on **Page 56**)
Parameters	40101–40999 (30101–30999)	101...1999	Parameter list: (see "Appendix A" starting on **Page 142**)
Input process data	42001–42099 (32001–32099)	2001...2099	(See **Page 137**)
Output process data	42101–42199 (32101–32199)	2101...2199	(See **Page 138**)

Each content in this table is assigned an ID number (abbreviation of the register numbers). This ID number is used in M-Max for the communication with Modbus RTU.

Example: Control word (ID 2001)

	ID	Register Numbers
Value	**2001**	**32001/42001**
Application	Communication of Modbus RTU	Memory location of the data

With some PLC manufacturers, the interface driver for Modbus RTU communication may contain an offset of +1 (the ID to be used would then be 2000 instead of 2001).

When processing values, the comma is not included, for example, the motor current (ID 2106) in the display of the MMX is shown as 0.35 A but is transferred via Modbus as 0023 (hex) (0035 [dec]).

Modbus Process Data

Process data is processed in the M-Max frequency inverter faster than the display values, error codes and parameters.

Input Process Data

The input process data is used to control the M-Max frequency inverter.

ID	Modbus Register	Designation	Value Range	Type
2001	32001, 42001	Fieldbus control word (BUS)	—	Binary code
2002	32002, 42002	Fieldbus general control word (BUS)	—	Binary code
2003	32003, 42003	Fieldbus speed setpoint (BUS)	0.01	%
2004	32004, 42004	PID controller, setpoint	0.01	%
2005	32005, 42005	PID actual value	0.01	%
2006	32006, 42006	—	—	—
2007	32007, 42007	—	—	—
2008	32008, 42008	—	—	—
2009	32009, 42009	—	—	—
2010	32010, 42010	—	—	—
2011	32011, 42011	—	—	—

Control Word (ID 2001)

These bits are used to control the M-Max frequency inverter. The content can be adapted to your own application and then sent as a control word to the frequency inverter.

	Description	
Bit	**Value = 0**	**Value = 1**
0	Stop	Operation
1	Clockwise rotating field (FWD)	Anticlockwise rotating field (REV)
2	No action	Reset error
3	As per setting P6.8	Free coasting (overwrite value from P6.8)
4	As per setting P6.8	Ramp (overwrite value from P6.8)
5	No action	Overwrite acceleration/deceleration ramps to 0.1 s
6	No action	Block setpoint (speed not variable)
7	No action	Overwrite setpoint with 0
8	No action	Control level = Fieldbus (overwrite value from P6.8)
9	No action	Setpoint input = Fieldbus (overwrite value from P6.8)
10	Not used	—
11	Not used	—
12	No action	The inverter is blocked and the drive stops as quickly as possible (an edge is required for restart)
13	No action	Control of a digital output: P5.1 = 28 (Relay R01) P5.2 = 28 (Relay R02) P5.3 = 28 (Transistor D0)
14	Not used	—
15	Not used	—

General Control Word (ID 2002)

15	14	13	12	11	10	9	8	7	6	5	4	3	2	1	0
NB	NB	NB	NB	NB	NB	NB	NB	NB	NB	NB	NB	NB	NB	NB	NB

Speed Setpoint (ID 2003; Frequency Setpoint)

The permitted value range lies between 0 and 10.000. In the application, this value is scaled to a percentage in the frequency range between the defined minimum and maximum frequencies.

15	14	13	12	11	10	9	8	7	6	5	4	3	2	1	0
MSB															LSB

Output Process Data

The output process data is used to monitor the frequency inverter.

ID	Modbus Register	Designation	Value Range	Type
2101	32101, 42101	Fieldbus status word	—	Binary code
2102	32102, 42102	Fieldbus general status word	—	Binary code
2103	32103, 42103	Fieldbus actual speed	0.01	%
2104	32104, 42104	Motor frequency	0.01	+/– Hz
2105	32105, 42105	Motor speed	1	+/– RPM (min^{-1})
2106	32106, 42106	Motor current	0.01	A
2107	32107, 42107	Motor torque	0.1	+/–% (of the nominal value)
2108	32108, 42108	Motor power	0.1	+/–% (of the nominal value)
2109	32109, 42109	Motor voltage	0.1	V
2110	32110, 42110	DC-link voltage (DC)	1	V
2111	32111, 42111	Current error	—	Error code (E_)

Status Word (ID 2101)

Information on the device status and messages are defined in the status word:

Bit	Description Value = 0	Value = 1
0	Drive not ready	Ready for operation (READY)
1	Stop	Running operation message (RUN)
2	Clockwise rotating field (FWD)	Anticlockwise rotating field (REV)
3	No fault	Fault detected (FAULT)
4	No warning	Warning active (ALARM)
5	Acceleration ramp	Frequency actual value equals setpoint value definition
6	—	Zero speed
7	Speed control deactivated	Speed control activated
8–15	Not used	

General Status Word (ID 2102)

Bit	Description Value = 0	Value = 1
0	—	Control level = Fieldbus (BUS)
1	—	Setpoint input = Fieldbus (BUS)
2–10	Not used	
11	Remote input not active	Remote input active The status of a selected digital input (P3.28) is read out
12	Actuation (P3.37) not active	Actuation (P3.37) active
13	—	Control level = Control signal terminals (I/O)
14	—	Control level = KEYPAD
15	—	Control level = Fieldbus (BUS)

Actual Speed (Frequency Actual Value)

The actual speed of the frequency inverter is within a value range of 0 and 10,000. In the application, this value is scaled to a percentage in the frequency range between the defined minimum and maximum frequencies.

15	14	13	12	11	10	9	8	7	6	5	4	3	2	1	0
MSB															LSB

Explanation of Function Code

Function Code 03 (hex): Reading of Holding Registers

This function reads the content of a number of consecutive holding registers (of specified register addresses).

Example:

Reading of motor speed (ID 2105) and motor current (ID 2106) of the M-Max frequency inverter with the slave address 5.

Master request: 05 03 0838 0002 4622 (hex)

Hex	Name
05	Slave address
03	Function code (reading of holding registers)
0838	2104 (dec): The ID number of the first requested register is 2105 (dec) as the master PLC has an offset of +1.
0002	Total number of requested registers (42105–42106)
4622	CRC

Slave response: 05 03 04 05D7 0018 0F0D (hex)

Hex	Name
05	Slave address
03	Function code (reading of holding registers)
04	Number of consecutive data bytes (2 registers x 2 bytes = 4 bytes)
05D7	Content (2 bytes) of register 42105: 1495 (dec) (motor speed = 1495 RPM)
0018	Content (2 bytes) of register 42106: 0024 (dec) (motor current = 0.24A)
0F0D	CRC

Function Code 04 (hex): Reading of Input Registers

This function reads the content of a number of consecutive input registers (of specified register addresses).

Example:

Reading of motor speed (ID 2105) and motor current (ID 2106) of the M-Max frequency inverter with the slave address 5.

Master request: 05 04 0838 0002 F3E2 (hex)

Hex	Name
05	Slave address
04	Function code (here: Reading of input registers)
0838	2104 (dec): The ID number of the first requested register is 2105 (dec) as the master PLC has an offset of +1.
0002	Total number of requested registers (32105–32106)
F3E2	CRC

Slave response: 05 04 04 05D7 0018 0EBA (hex)

Hex	Name
05	Slave address
04	Function code (here: Reading of input registers)
04	Number of consecutive data bytes (2 registers x 2 bytes = 4 bytes)
05D7	Content (2 bytes) of register 32105: 1495 (dec) (motor speed = 1495 RPM)
0018	Content (2 bytes) of registers 32106: 0024 (dec) (motor current = 0.24A)
0EBA	CRC

Function Code 06 (hex): Writing a Holding Register

This function writes the data to a holding register (of specified register addresses).

Example:

Writing of the control word (BUS) (ID 2001) of an MMX frequency inverter with the slave address 5.

Master request: 05 06 07D0 0003 C2C8 (hex)

Hex	Name
05	Slave address
06	Function code (here: Writing of a holding register)
07D0	2000 (dec): The ID number of the written register is 2001 (dec) as the master PLC has an offset of +1
0003	Content (2 bytes) for register 42101: 0000 0000 0000 0011 [bin] See anticlockwise, RUN
C2C8	CRC

Slave response: 05 06 07D0 0003 C8C2 (hex)

The slave response is a copy of the master request if it is a normal response.

Hex	Name
05	Slave address
06	Function code (here: Writing of a holding register)
07D0	2000 (dec): The ID number of the first requested register is 2001 (dec) as the master PLC has an offset of +1
0003	Content (2 bytes) for register 42101: 0000 0000 0000 0011 (bin) See anticlockwise, RUN
C8C2	CRC

Function code 06 (hex) can be used for broadcasting.

Function Code 10 (hex): Writing of the Holding Registers

This function writes data to a number of consecutive holding registers (of specified register addresses).

CAUTION

Although the registers to be written are consecutive, the ID numbers of the parameter list are not. Only the ID numbers in the process data list are consecutive.

Example:

Writing of the control word (ID 2001) of the general control word (ID 2002) and the speed setpoint (ID2003) of an MMX frequency inverter with the slave address 5.

Master request:
05 10 07D0 0003 06 0001 0000 2710 D125 (hex)

Hex	Name
05	Slave address
10	Function code (here: Writing of the holding registers)
07D0	2000 (dec): The ID number of the first written register is 2001 (dec) as the master PLC has an offset of +1
0003	Total number of requested registers (42001–42103)
06	Number of consecutive data bytes (3 registers x 2 bytes = 6 bytes)
0001	Content (2 bytes) for register 42101: 0000 0000 0000 0001 (bin) (Start command)
0000	Content (2 bytes) for register 42102: 0000 (dec) (no content, as not used)
2710	Content (2 bytes) for register 42103: 10.000 (dec) (frequency setpoint = 100.00%)
D125	CRC

Slave response: 05 10 07D0 0003 8101 (hex)

Hex	Name
05	Slave address
10	Function code (here: Writing of the holding registers)
07D0	2000 (dec): The ID number of the first written register is 2001 (dec) as the master PLC has an offset of +1
0003	Total number of requested registers (42001–42103)
8101	CRC

Function code 10 (hex) can be used for broadcasting.

Appendix A

Special Technical Data

The following tables show the technical data of the M-Max frequency inverter in the individual power classes with the allocated motor output.

The motor output allocation is based on the rated operational current.

The motor output designates the respective active power output to the drive shaft of a normal, four-pole, internally or externally ventilated three-phase asynchronous motor with 1.500 RPM at 50 Hz or 1.800 RPM at 60 Hz.

Device Series MMX11

MMX11AA…N0-0		Symbols ①	Unit	1D7	2D4	2D8	3D7	4D8
Rated operational current		I_e	A	1.7	2.4	2.8	3.7	4.8
Overload current for 60s every 600s at 122°F (50°C)		I_L	A	2.6	3.6	4.2	5.6	7.2
Starting current for 2s every 20s at 122°F (50°C)		I_L	A	3.4	4.8	5.6	7.4	9.6
Apparent power at rated operation ②	230V	S	kVA	0.68	0.96	1.12	1.47	1.91
	240V	S	kVA	0.71	0.99	1.16	1.54	1.99
Assigned motor rating (230V) ②		P	kW	0.25	0.37	0.55	0.75	1.1
			HP	1/4	1/2	3/4	1	1-1/2
Power side (primary side)								
Number of phases				Single-phase or two-phase				
Rated voltage		U_{LN}	V	110 –15%–120 +10%, 50/60 Hz (94–132V ±0%, 45–66 Hz ±0%)				
Input current		I_{LN}	A	9.2	11.6	12.4	15	16.5
Maximum leakage current to ground (PE) without motor								
MMX11...N_		I_{PE}	mA					
Braking torque								
Default		M/M_N	%	≦30				
DC braking		I/I_e	%	≦100, adjustable				
Pulse frequency		f_{PWM}	kHz	6 (adjustable 1–16)				
Heat dissipation at rated operational current (I_e)		P_v	W	22.3	27.9	33.4	40.3	49.2
Efficiency		h		0.91	0.92	0.94	0.95	0.96
Fan (device-internal, temperature-controlled)				✓	✓	✓	✓	✓
Installation size				FS2	FS2	FS2	FS2	FS3
Weight		m	Lbs (kg)	1.5 (0.7)	1.5 (0.7)	1.5 (0.7)	1.5 (0.7)	2.2 (0.99)

Notes

① Symbols used in technical data and formulas.

② Internal voltage doubler circuit:
U_{LN} = 115V → U_2 = 230V
U_{LN} = 120V → U_2 = 240V

③ Guide value (calculated), no standard rating.

Device Series MMX12

MMX12AA…F0-0		Symbols ①	Unit	1D7	2D4	2D8	3D7	4D8	7D0	9D6
Rated operational current		I_e	A	1.7	2.4	2.8	3.7	4.8	7	9.6
Overload current for 60s every 600s at 122°F (50°C)		I_L	A	2.6	3.6	4.2	5.6	7.2	10.4	14.4
Starting current for 2s every 20s at 122°F (50°C)		I_L	A	3.4	4.8	5.6	7.4	9.6	14	19.2
Apparent power at rated operation	230V	S	kVA	0.68	0.96	1.12	1.47	1.91	2.79	3.82
	240V	S	kVA	0.71	0.99	1.16	1.54	1.99	2.91	3.99
Assigned motor rating	230V	P	kW	0.25	0.37	0.55	0.75	1.1	1.5	2.2
			HP	1/4	1/2	3/4	1	1-1/2	2	3
Power side (primary side)										
Number of phases				Single-phase or two-phase						
Rated voltage		U_{LN}	V	208V –15%–240V +10%, 50/60 Hz (177–264V ±0%, 45–66 Hz ±0%)						
Input current		I_{LN}	A	4.2	5.7	6.6	8.3	11.2	14.1	15.8
Maximum leakage current to ground (PE) without motor										
MMX12...N_		I_{PE}	mA							
MMX12...F_		I_{PE}	mA	15.4			11.8			24.4
Braking torque										
Default		M/M_N	%	≦30						
DC braking		I/I_e	%	≦100, adjustable						
Pulse frequency		f_{PWM}	kHz	6 (adjustable 1–16)						
Heat dissipation at rated operational current (I_e)		P_v	W	17.9	24.6	29.2	40.2	49.6	66.8	78.1
Efficiency		h		0.93	0.93	0.95	0.95	0.95	0.96	0.96
Fan (device-internal, temperature-controlled)				✓	✓	✓	✓	✓	✓	✓
Installation size				FS1	FS1	FS1	FS2	FS2	FS2	FS3
Weight		m	Lbs (kg)	1.2 (0.55)	1.2 (0.55)	1.2 (0.55)	1.5 (0.7)	1.5 (0.7)	1.5 (0.7)	2.2 (0.99)

Notes

① Symbols used in technical data and formulas.

② Guide value (calculated), no standard rating.

Device Series MMX32

MMX32AA…NO-0		Symbols ①	Unit	1D7	2D4	2D8	3D7	4D8	7D0	011	017	025	031	038
Rated operational current		I_e	A	1.7	2.4	2.8	3.7	4.8	7	11	17.5	25	31	38
Overload current for 60s every 600s at 122°F (50°C)		I_L	A	2.6	3.6	4.2	5.6	7.2	10.4	14.4	26.3	37.5	46.5	57
Starting current for 2s every 20s at 122°F (50°C)		I_L	A	3.4	4.8	5.6	7.4	9.6	14	19.2	35	50	62	76
Apparent power at rated operation	230V	S	kVA	0.68	0.96	1.12	1.47	1.91	2.79	3.82	7	10	12.4	15.1
	240V	S	kVA	0.71	0.99	1.16	1.54	1.99	2.91	3.99	7.3	10.4	12.9	15.8
Assigned motor rating	230V	P	kW	0.25	0.37	0.55	0.75	1.1	1.5	2.2	4	5.5	7.5	11
			HP	1/4	1/2	3/4	1	1-1/2	2	3	5	7.5	10	15
Power side (primary side)														
Number of phases				Three-phase										
Rated voltage		U_{LN}	V	208V –15%–240V +10%, 50/60 Hz (177–264V ±0%, 45–66 Hz ±0%)										
Input current		I_{LN}	A	2.7	3.5	3.8	4.3	6.8	8.4	13.4	20.6	30.3	36.6	44.6
Maximum leakage current to ground (PE) without motor														
MMX32...N_		I_{PE}	mA	8.6	8.6	8.6	16.1	16.1	16.1	8.6	14	14	9	9
Braking torque														
Default		M/M_N	%	≦30	≦30	≦30	≦30	≦30	≦30	≦30	≦30	≦30	≦30	≦30
Brake chopper with external braking resistance				—	—	—	Max. 100% rated operational current I_e with external braking resistance							
Minimum braking resistance		R_B	ohms	—	—	—	35	35	35	26	14	14	9	9
Switch-on threshold for the braking resistor		U_{DC}	Vdc	—	—	—	Programmable P12.6				440	440	440	440
DC braking		I/I_e	%	≦100, adjustable										
Pulse frequency		f_{PWM}	kHz	6 (adjustable 1–16)										
Heat dissipation at rated operational current (I_e)		P_v	W	17.4	23.7	28.3	37.9	48.4	63.8	84	②	②	②	②
Efficiency		h		0.93	0.94	0.95	0.95	0.96	0.96	0.96	②	②	②	②
Fan (device-internal, temperature-controlled)				✓	✓	✓	✓	✓	✓	✓	✓	✓	✓	✓
Installation size				FS1	FS1	FS1	FS2	FS2	FS2	FS3	FS4	FS4	FS5	FS5
Weight		m	Lbs (kg)	1.2 (0.55)	1.2 (0.55)	1.2 (0.55)	1.5 (0.7)	1.5 (0.7)	1.5 (0.7)	2.2 (0.99)	17.6 (8.0)	17.6 (8.0)	22.1 (10.0)	22.1 (10.0)

Notes

① Symbols used in technical data and formulas.

② Contact the Eaton Drives Technical Resource Center for technical data.

Device Series MMX34

MMX34AA…F0-0		Symbols ①	Unit	1D3	1D9	2D4	3D3	4D3	5D6	7D6
Rated operational current (I_e)		I_e	A	1.3	1.9	2.4	3.3	4.3	5.6	7.6
Overload current for 60s every 600s at 122°F (50°C)		I_L	A	2	2.9	3.6	5	6.5	8.4	11.4
Starting current for 2s every 20s at 122°F (50°C)		I_L	A	2.6	3.8	4.8	6.6	8.6	11.2	15.2
Apparent power in rated operation	400V	S	kVA	0.9	1.32	1.66	2.29	2.98	3.88	5.27
	480V	S	kVA	1.08	1.56	2	2.74	3.57	4.66	6.32
Assigned motor rating	400V	P	kW	0.37	0.55	0.75	1.1	1.5	2.2	3
	460V		HP	1/2	3/4	1	1-1/2	2	3	4 ②
Power side (Primary side)										
Number of phases				Three-phase						
Rated voltage		U_{LN}	V	380V –15%–480V +10%, 50/60 Hz (323–528V ±0%, 45–66 Hz ±0%)						
Input current		I_{LN}	A	2.2	2.8	3.2	4	5.6	7.3	9.6
Maximum leakage current to ground (PE) without motor										
MMX34...N_		I_{PE}	mA							
MMX34...F_		I_{PE}	mA	45.1	45.1	45.1	25.1	25.1	25.1	24.9
Braking torque										
Default		I/I_e	%	≦30	≦30	≦30	≦30	≦30	≦30	≦30
Brake chopper with external braking resistance				—	—	—	Max. 100% rated operational current I_e with external braking resistance			
Minimum braking resistance		R_B	ohms	—	—	—	75	75	75	54
Switch-on threshold for the braking transistor		U_{DC}	Vdc	—	—	—	Programmable P12.6			
DC braking		I/I_e	%	≦100, adjustable						
Pulse frequency		f_{PWM}	kHz	6 (adjustable 1–16)						
Heat dissipation at rated operational current (I_e)		P_v	W	21.7	29.7	31.7	51.5	66.4	88.3	116.9
Efficiency		h		0.94	0.95	0.95	0.95	0.96	0.96	0.96
Fan (device-internal, temperature-controlled)				✓	✓	✓	✓	✓	✓	✓
Installation size				FS1	FS1	FS1	FS2	FS2	FS2	FS3
Weight		m	Lbs (kg)	1.2 (0.55)	1.2 (0.55)	1.2 (0.55)	1.5 (0.7)	1.5 (0.7)	1.5 (0.7)	2.2 (0.99)

Notes

① Symbols used in technical data and formulas.

② Guide value (calculated), no standard rating.

Device Series MMX34, continued

MMX34AA…F0-0		Symbols ①	Unit	9D0	012	014	016	023	031	038
Rated operational current (I_e)		I_e	A	9	12	14	16	23	31	38
Overload current for 60s every 600s at 122°F (50°C)		I_L	A	13.5	18	21	24	34.5	46.5	57
Starting current for 2s every 20s at 122°F (50°C)		I_L	A	18	24	28	32	46	62	76
Apparent power in rated operation	400V	S	kVA	6.24	8.32	9.7	11	16	21.5	26.3
	480V	S	kVA	7.48	9.98	11.64	13.3	19.1	25.7	31.6
Assigned motor rating	400V	P	kW	4	5.5	7.5 ②	7.5	11	15	18.5
	460V		HP	5	7-1/2	10	10	15	20	25
Power side (Primary side)										
Number of phases				Three-phase						
Rated voltage		U_{LN}	V	380V –15%–480V +10%, 50/60 Hz (323–528V ±0%, 45–66 Hz ±0%)						
Input current		I_{LN}	A	11.5	14.9	18.7	17.1	25.5	33	41.7
Maximum leakage current to ground (PE) without motor										
MMX34...N_		I_{PE}	mA	③	③	③	③	③	③	③
MMX34...F_		I_{PE}	mA	③	③	③	③	③	③	③
Braking torque										
Default (standard)		I/I_e	%	≦30	≦30	≦30	≦30	≦30	≦30	≦30
Brake chopper with external braking resistance				Max. 100% rated operational current I_e with external braking resistance						
Minimum braking resistance		R_B	ohms	54	54	54	28	28	17	17
Switch-on threshold for the braking transistor		U_{DC}	Vdc	Programmable P12.6			765	765	765	765
DC braking		I/I_e	%	≦100, adjustable						
Pulse frequency		f_{PWM}	kHz	6 (adjustable 1–16)		1–4	6 (adjustable 1–16)			
Heat dissipation at rated operational current (I_e)		P_v	W	136.2	185.1	223.7	③	③	③	③
Efficiency		h		0.97	0.97	0.97	③	③	③	③
Fan (device-internal, temperature-controlled)				✓	✓	✓	✓	✓	✓	✓
Installation size				FS3	FS3	FS3	FS4	FS4	FS5	FS5
Weight		m	Lbs (kg)	2.2 (0.99)	2.2 (0.99)	2.2 (0.99)	17.6 (8.0)	17.6 (8.0)	22.1 (10.0)	22.1 (10.0)

Notes

① Symbols used in technical data and formulas.
② Allocated motor output with reduced load torque (about 10%).
③ Contact the Eaton Drives Technical Resource Center for technical data.

Device Series MMX35

MMX35AA…N0-0		Symbols ①	Unit	1D7	2D7	3D9	6D1	9D0
Rated operational current (I_e)		I_e	A	1.7	2.7	3.9	6.1	9.0
Overload current for 60s every 600s at 122°F (50°C)		I_L	A	2.6	4	5.9	9.2	13.5
Starting current for 2s every 20s at 122°F (50°C)		I_L	A	3.4	5.4	7.8	12.2	18.0
Assigned motor rating	575V	HP	HP	1	2	3	5	7.5
Power side (Primary side)								
Number of phases				Three-phase				
Rated voltage		U_{LN}	V	575V –15%–575V +10%, 60 Hz				
Input current		I_{LN}	A	2	3.6	5	7.6	10.4
Maximum leakage current to ground (PE) without motor								
MMX35...N_		I_{PE}	mA	—	—	—	—	—
Braking torque								
Default		I/I_e	%	≦30				
Brake chopper with external braking resistance				Max. 100% rated operational current I_e with external braking resistance				
Minimum braking resistance		R_B	ohms	103	103	103	103	103
Switch-on threshold for the braking transistor		U_{DC}	Vdc	Programmable P12.6				
DC braking		I/I_e	%	≦100, adjustable				
Pulse frequency		f_{PWM}	kHz	6 (adjustable 1–16)				
Heat dissipation at rated operational current (I_e)		P_v	W	190	190	②	②	②
Efficiency		h		97.6	97.6	②	②	②
Fan (device-internal, temperature-controlled)				✓	✓	✓	✓	✓
Installation size				FS3	FS3	FS3	FS3	FS3
Weight		m	Lbs (kg)	2.2 (0.99)	2.2 (0.99)	2.2 (0.99)	2.2 (0.99)	2.2 (0.99)

Notes

① Symbols used in technical data and formulas.

② Contact the Eaton Drives Technical Resource Center for technical data.

Dimensions and Frame Sizes

Approximate Dimensions in inches (mm)

Dimensions and Frame Sizes, FS1–FS3 (FS = Frame Size)

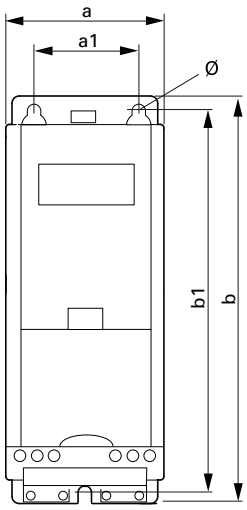

FS1

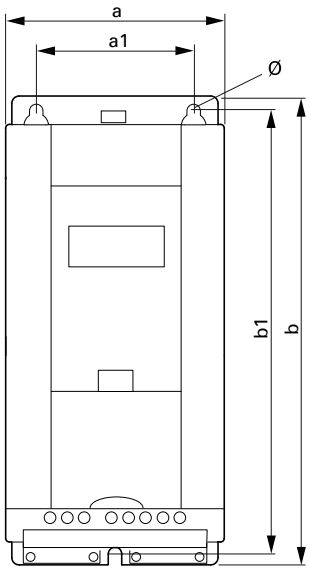

FS2

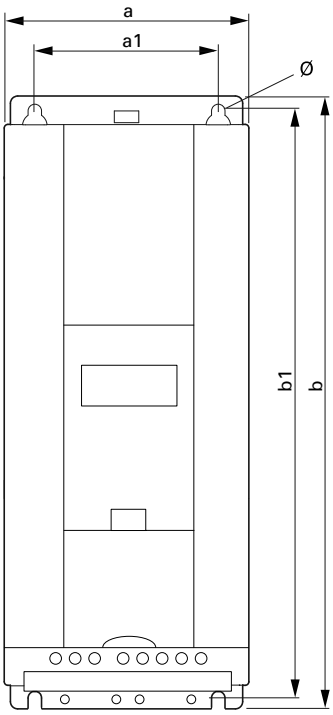

FS3

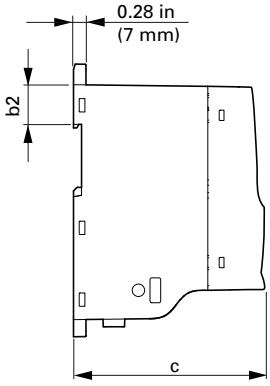

Approximate Dimensions in inches (mm)

Dimensions and Frame Sizes, FS4 and FS5 (FS = Frame Size)

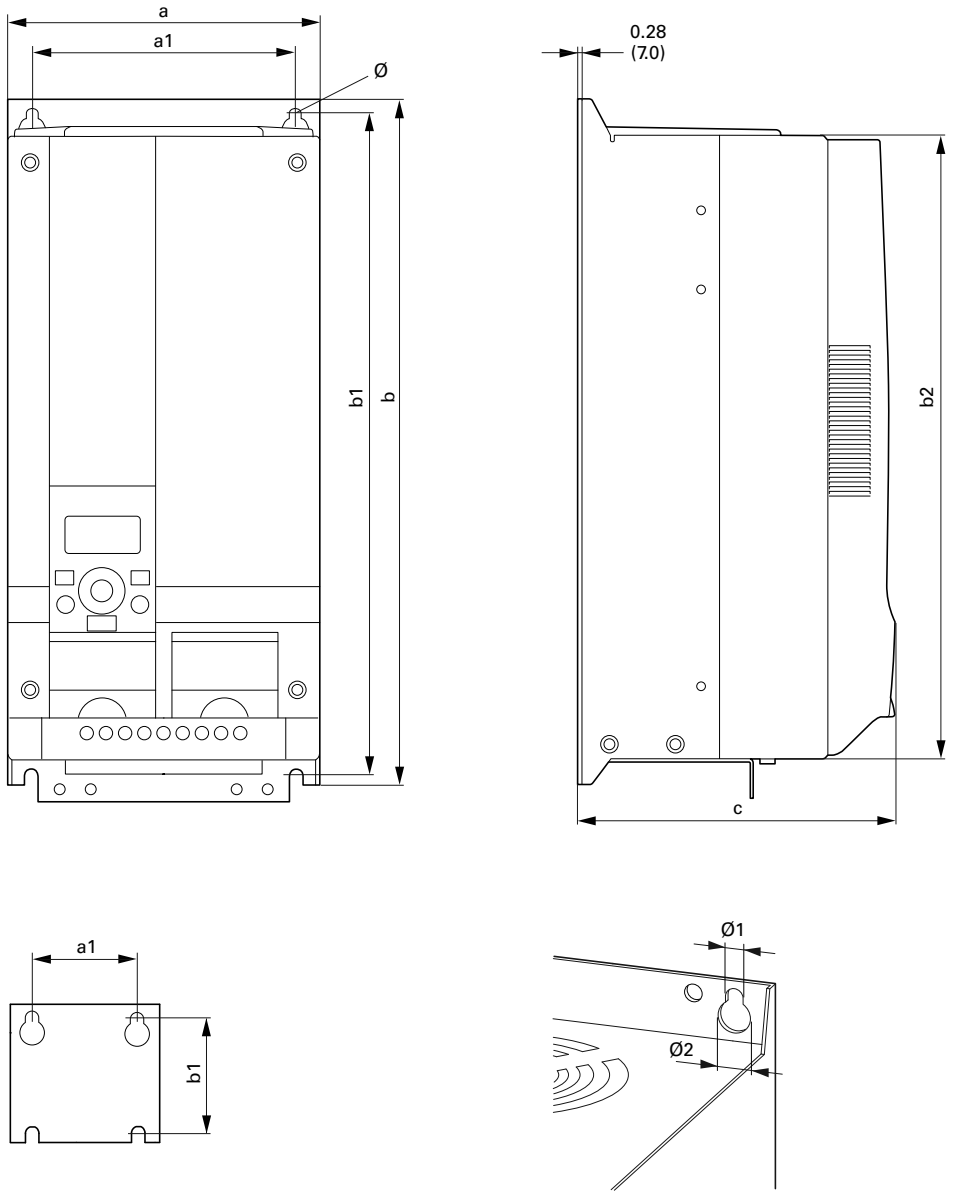

Dimensions and Frame Sizes

Part Number	Approximate Dimensions in inches (mm) a	a1	b	b1	b2	c	Ø, Ø1	Ø2	Installation Size
MMX12AA1D7_ MMX12AA2D4_ MMX12AA2D8_	2.60 (66)	1.50 (38)	6.30 (160)	5.79 (147)	1.26 (32)	4.02 (102)	0.18 (4.5)	—	FS1
MMX32AA1D7_ MMX32AA2D4_ MMX32AA2D8_									
MMX34AA1D3_ MMX34AA1D9_ MMX34AA2D4_									
MMX11AA1D7_ MMX11AA2D4_ MMX11AA2D8_ MMX11AA3D7_	3.54 (90)	2.46 (62.5)	7.68 (195)	7.17 (182)	1.26 (32)	4.14 (105)	2.17 (5.5)	—	FS2
MMX12AA3D7_ MMX12AA4D8_ MMX12AA7D0_									
MMX32AA3D7_ MMX32AA4D8_ MMX32AA7D0_									
MMX34AA3D3_ MMX34AA4D3_ MMX34AA5D6_									
MMX11AA4D8_	3.94 (100)	2.95 (75)	9.96 (253)	9.53 (242)	1.34 (34)	4.41 (112)	2.17 (5.5)	—	FS3
MMX12AA9D6_									
MMX32AA011_									
MMX34AA7D6_ MMX34AA9D0_ MMX34AA012_ MMX34AA014_									
MMX35AA1D7_ MMX35AA2D7_ MMX35AA3D9_ MMX35AA6D1_ MMX35AA9D0_									
MMX32AA012_ MMX32AA017_ MMX32AA025_	6.50 (165.0)	5.51 (140.0)	14.57 (370.0)	13.82 (351.0)	13.27 (337.0)	6.61 (168.0)	0.28 (7.0)	0.55 (14.0)	FS4
MMX34AA016_ MMX34AA023_									
MMX32AA031_ MMX32AA038_	6.50 (165.0)	5.51 (140.0)	14.57 (414.0)	13.82 (398.0)	15.08 (383.0)	8.07 (205.0)	0.28 (7.0)	0.55 (14.0)	FS5
MMX34AA031_ MMX34AA038_									

Note

1 in = 25.4 mm, 1 mm = 0.0394 in

PC Interface Card

MMX-COM-PC

Equipment Supplied MMX-COM-PC

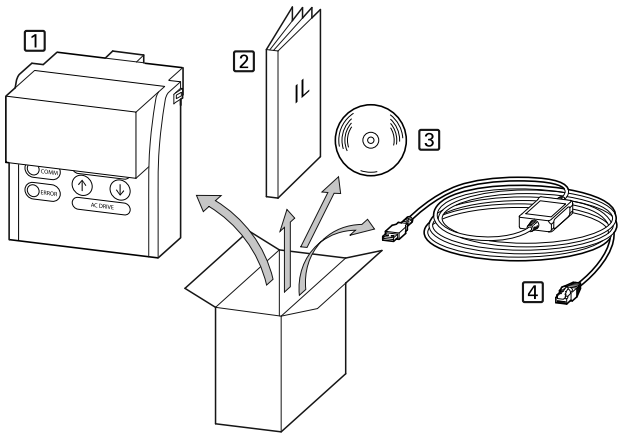

1. MMX-COM-PC connection module
2. Instructional leaflet IL04012004Z
3. CD with MaxConnect parameter software and driver software
4. Connection cable with interface converter

Note: The MMX-COM-PC adapter is not supplied with the M-Max frequency inverter.

The MMX-COM-PC PC connection module enables the communication between the M-Max frequency inverter and a PC with the Windows operating system (point-to-point connection). Together with the MaxConnect parameter software, this enables you to:

- Upload and download all parameters
- Store the parameters, compare them and print them in parameter lists
- Graphically show time sequences in the Monitor display. The oscillograms can be stored in the PC and printed out

The MMX-COM-PC interface module can be fitted and connected without any tools required. The MMX-COM-PC module is fitted on the front of the MMX frequency inverter.

Fitting the MMX-COM-PC Connection Module

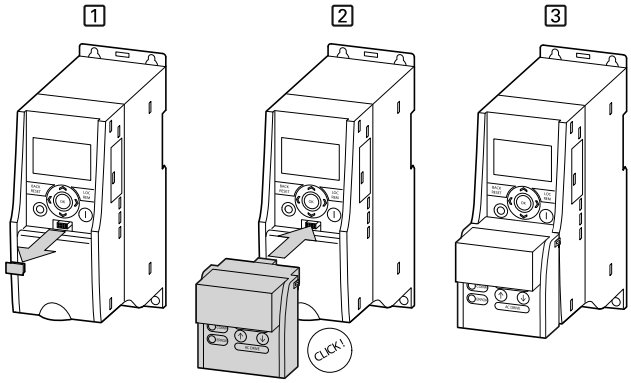

1. Remove the interface cover on the frequency inverter (do not discard)
2. Fitting the MMX-COM-PC
3. Ready for operation

To remove, push in the two retaining clips on the side. The connection module can then be pulled off from the front, see step [1] in the figure below.

Removing the MMX-COM-PC Connection Module

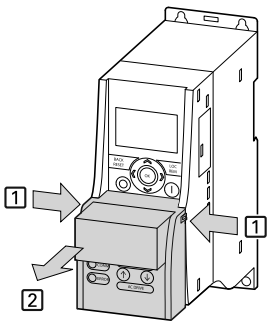

When the power supply of the MMX frequency inverter is switched on with the MMX-COM-PC fitted, the parameters can be copied via the two function keys:

- Upload: The parameters from the frequency inverter (AC-DRIVE) are loaded in MMX-COM-PC (ADAPTER)
- Download: The parameters are loaded from the MMX-COM-PC (ADAPTER) to the frequency inverter (AC-DRIVES)

The active data transfer is indicated by the green flashing COMM LED. The ERROR LED will be lit red in the event of a faulty or interrupted data transfer.

Upload

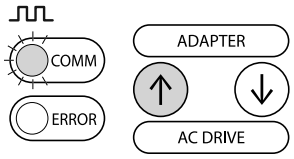

Download

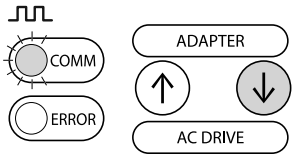

The MMX-COM-PC can also be supplied with a 9V battery or via an external 24V voltage (DC) instead of line voltage of the frequency inverters.

Technical data for power supply:

- 9V block battery, current consumption around 60 mA
- 24V plug power supply unit with 5.5 mm DC plug

Inserting the 9V Block Battery

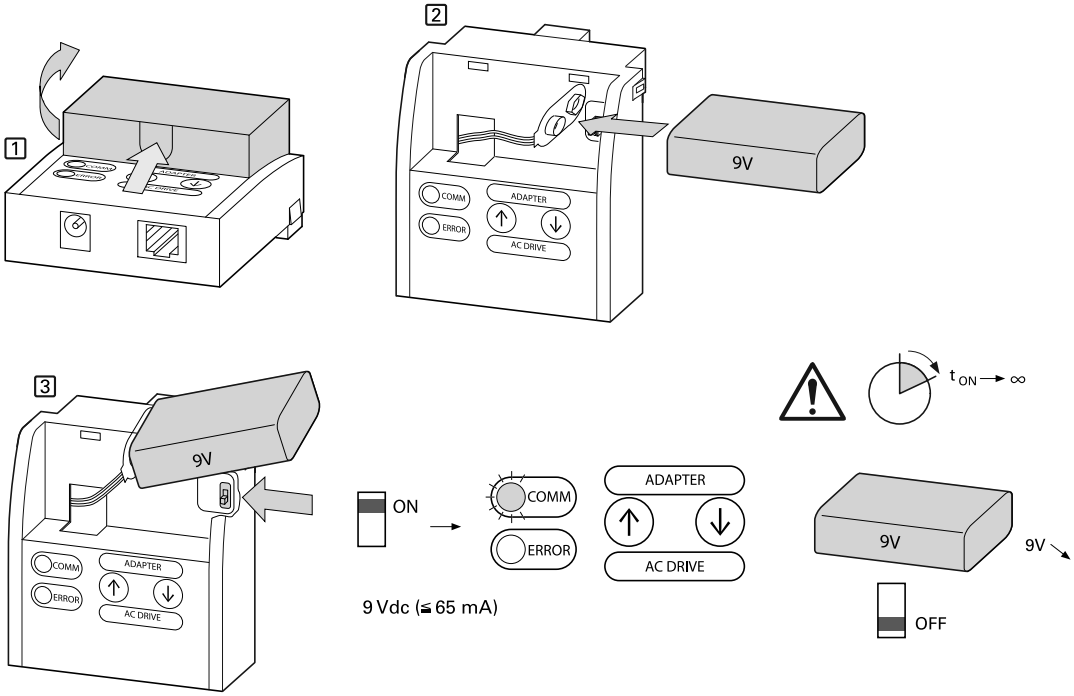

1. Open the cover
2. 9V block battery plug connection
3. Switch the microswitch to ON. COMM LED is lit

Note: Current consumption around 65 mA. Switch off 9V block battery after use (microswitch OFF) or remove battery (discharged within around 24h).

Power Supply

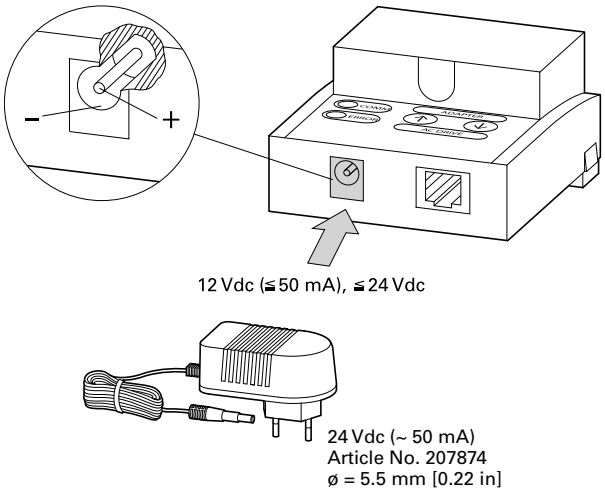

The MMX-COM-PC can also be fed with a 12 to 24 Vdc external power supply. The connection is implemented using a 5.5 mm power supply plug.

Note: Further information on using the MMX-COM-PC connection module is provided in IL04012004Z.

MaxConnect

The MaxConnect parameter software allows fast parameter assignment, operation, diagnostics and documentation (printout and storage of parameter lists) via a PC and the data transfer with an M-Max frequency inverter. MaxConnect is stored on the enclosed CD and is available free of charge for download. It may also be downloaded from the internet. Visit www.Eaton.com/drives.

Parameter Software MaxConnect

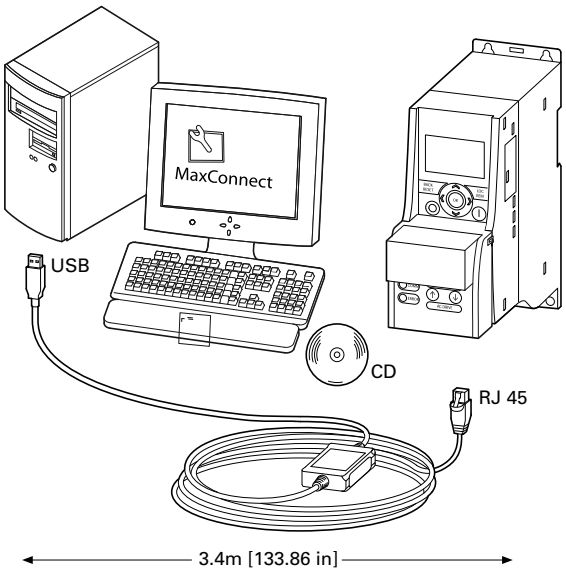

Mounting Frame for Fieldbus Connection

MMX-NET-XA

The MMX-NET-XA mounting frame enables the mounting and connection of fieldbus interface cards to the frequency inverters in frame sizes FS1, FS2 and FS3.

MMX-NET-XA consists of the two housing sections:

- The mounting plate with the 24-pole slot, pluggable connection cable and the ground terminal (shielding, GND, PE)
- The cover for holding and protecting the fieldbus interface card

Note: Detailed installation instructions are provided in IL040120009Z.

MMX-NET-XA Mounting Frame

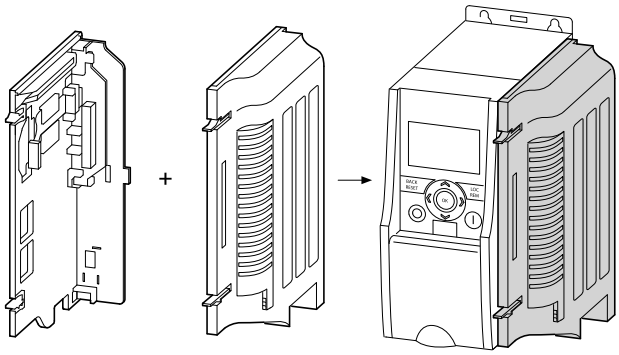

Note: The MMX-NET-XA mounting frame is not supplied with the M-Max frequency inverter.

The MMX-NET-XA mounting plate is fitted on the right-hand side (view from front of the keypad) of the MMX frequency inverter:

- First remove the cover of the interface in the MMX

Removing the Interface Cover on the M-Max

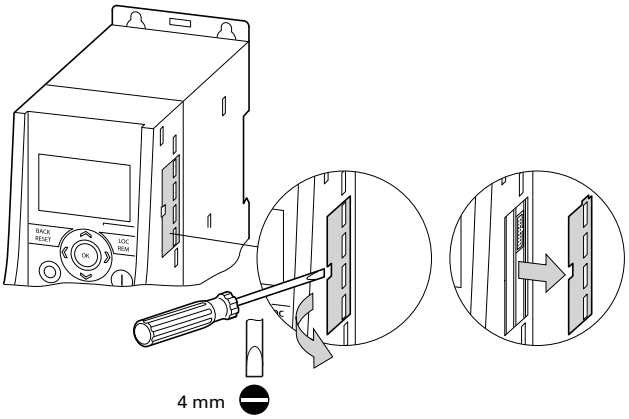

The remaining installation steps are then carried out without any tools using the cutouts provided in the housing of the MMX (snap fixing).

- Fit the plug and connection cable onto the interface of the MMX

Fitting and Connecting the Mounting Plate of the MMX-NET-XA

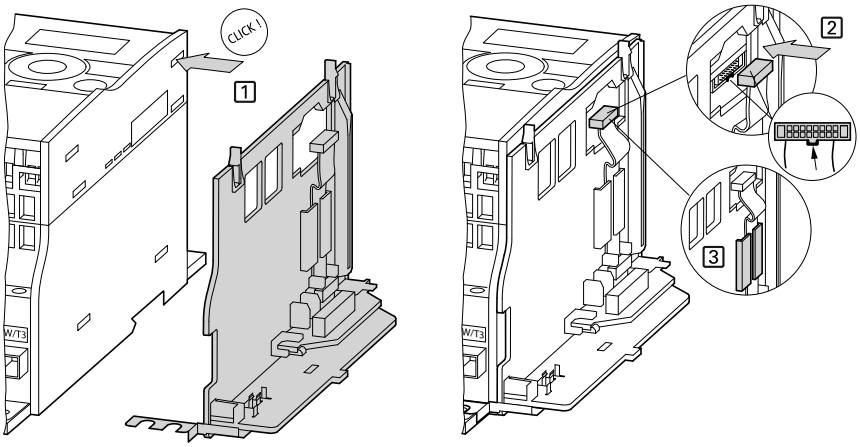

You can then fit a fieldbus interface card (for example, PROFIBUS DP, and so on) in the cover of the mounting frame.

Note: Before installing the fieldbus interface card check whether the plug connection provided, such as GND or bus terminal resistor have to be changed.

Cover of the MMX-NET-XA for Holding the Fieldbus Interface Card

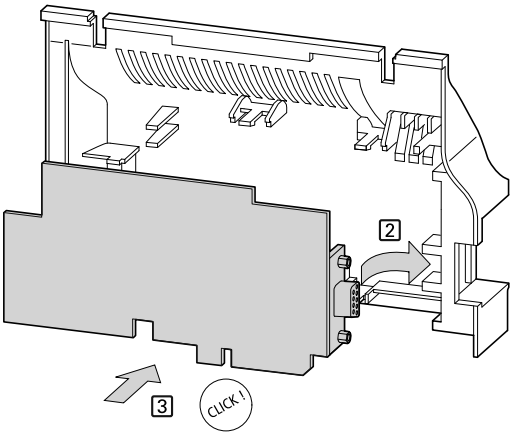

- Then fit the cover with the inserted fieldbus interface card onto the already fitted and installed mounting plate of the MMX-NET-XA

Connecting the Interface Card with the Frequency Inverter

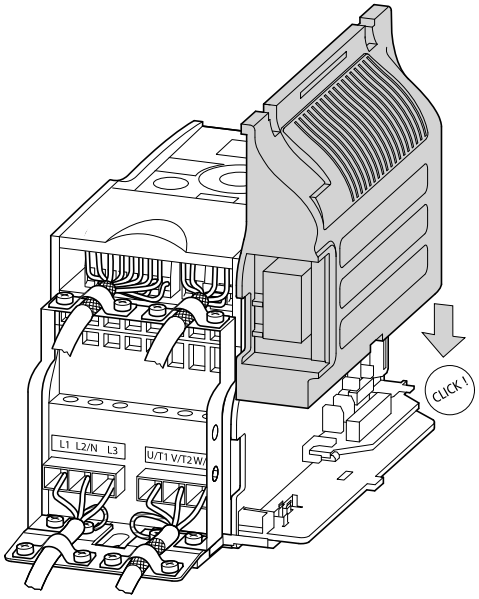

- Make the connections to the selected fieldbus system through the opening in the mounting frame directly on the card

MMX-NET-XB

The MMX-NET-XB interface module enables the flush mounting and connection of fieldbus interface cards to the frequency inverters in frame sizes FS4 and FS5.

MMX-NET-XB Interface Module

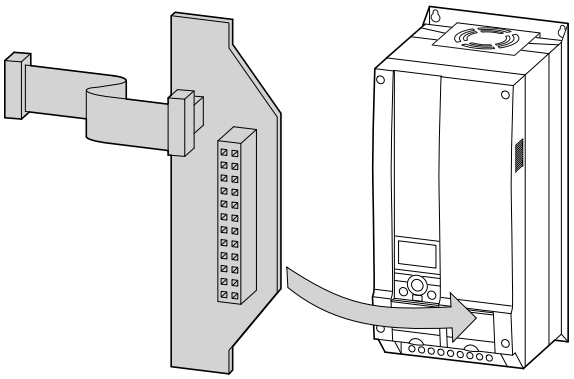

Note: The MMX-NET-XB interface module is not supplied with the M-Max frequency inverter.

Note: Detailed installation instructions are provided in IL04012010Z.

The MMX-NET-XC interface module is fitted under the cover on the right-hand side (view from front of the keypad) of the MMX frequency inverter:

- First remove the cover of the frequency inverter (4 screws)

Remove Cover (FS4, FS5)

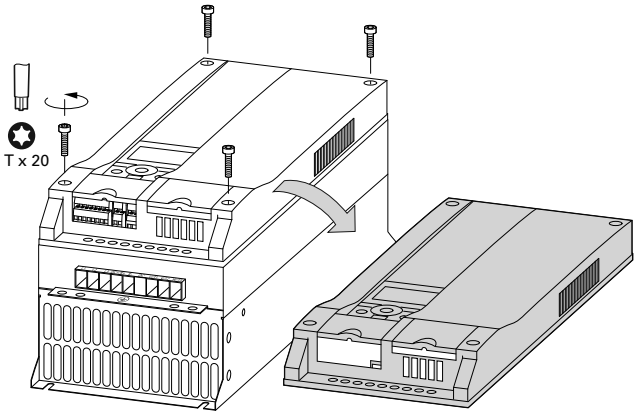

Accessories are provided with the MMX-NET-XB for fitting the fieldbus interface card and interface module.

Mounting Accessories for FS4, FS5

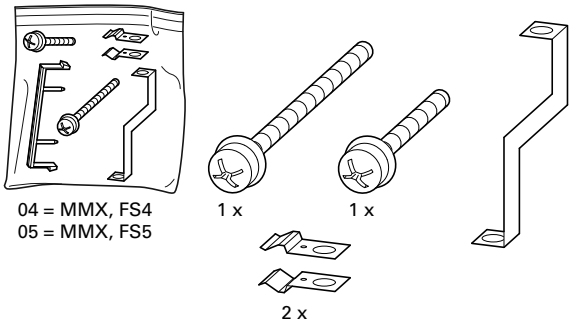

- To install, remove the screw in the bottom right corner of the frequency inverter (chassis connection, board)
- Then fit the metal bracket marked 04 (= FS4) or 05 (= FS5) with this screw
- At the top end of the metal bracket fasten the two metal clips

The fieldbus interface cards with pluggable screw terminals must be plugged in to support the terminals of the plastic strip.

Plastic Bridge for Holding the Control Terminals

(For example: OPTE3 0 XMX-NET-PS-A)

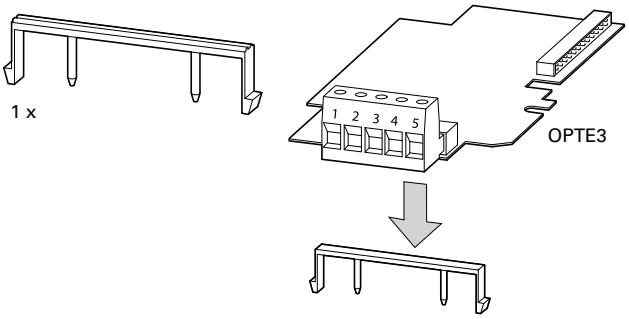

- Then connect the required fieldbus interface card to the MMX-NET-XB interface module

The mounting is carried out without tools at the corresponding cutouts in the housing of the MMX (snap fitting). Plug and connection cable are then fitted to the interface of the MMX (below the LCD display unit).

Connecting the MMX-NET-XB Interface Module with the Fieldbus Interface Cards

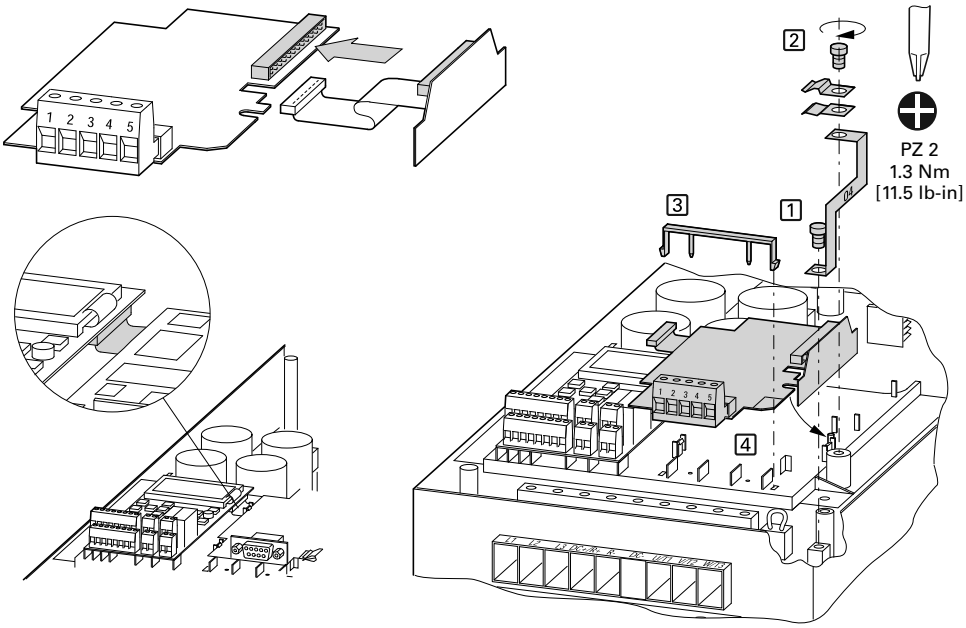

Note: Before installing the fieldbus interface card check whether the plug connection provided, such as GND or bus terminal resistor have to be changed.

- Fit the combination of MMX-NET-XB interface module and fieldbus interface card and connect them

PROFIBUS DP Fieldbus Interface Card

Note: The PROFIBUS DP fieldbus interface card XMX-NET-PD-A or XMX-NET-PS-A are not supplied with the M-Max frequency inverter.

XMX-NET-PD-A and XMX-NET-PS-A enable the connection (slave) of frequency inverters of the M-Max series to the standard PROFIBUS DP fieldbus.

Note: The optional MMX-NET-XA mounting frame is required for mounting and connecting the MMX frequency inverter.

Technical data:

- Communication protocol: PROFIdrive (PROFIBUS profile for variable speed drives)
- Data transfer: RS485, half-duplex

Note: Further information on hardware and engineering the XMX-NET-NET-P_ interface card is provided in the manual MN04012002Z.

XMX-NET-PD-A

The fieldbus connection is implemented with a nine-pole Sub-D plug connector.

XMX-NET-PD-A PROFIBUS DP Fieldbus Interface Card with Nine-Pole Sub-D Plug Connection

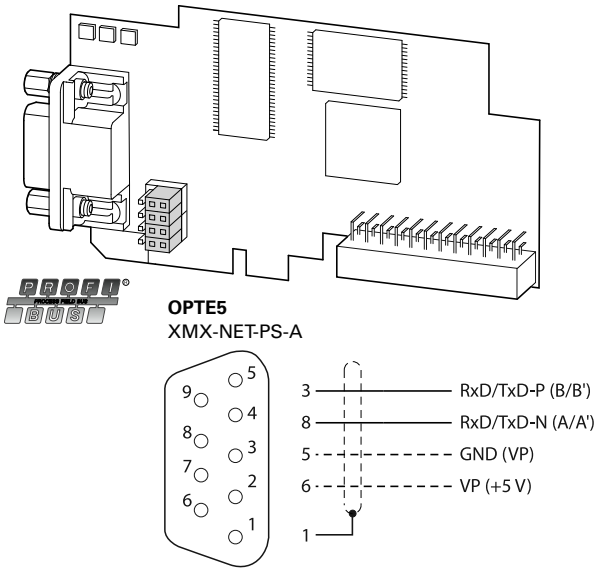

Note: Detailed installation instructions are provided in IL04012008Z.

XMX-NET-PS-A

The fieldbus connection is implemented with a pluggable five-pole screw terminal.

Fieldbus Connection

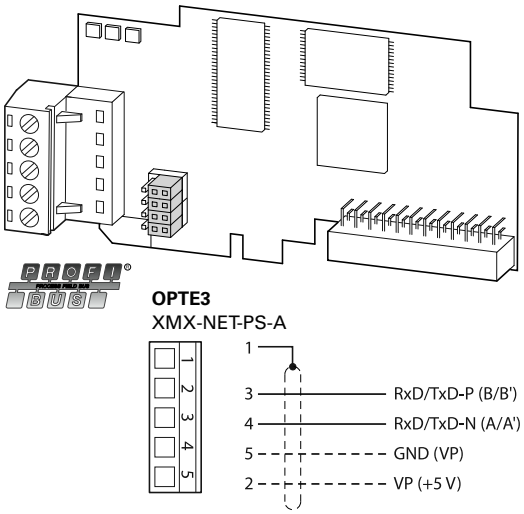

Note: Detailed installation instructions are provided in IL04012008Z.

XMX-NET-DN-A

XMX-NET-DN-A DeviceNet Fieldbus Interface Card

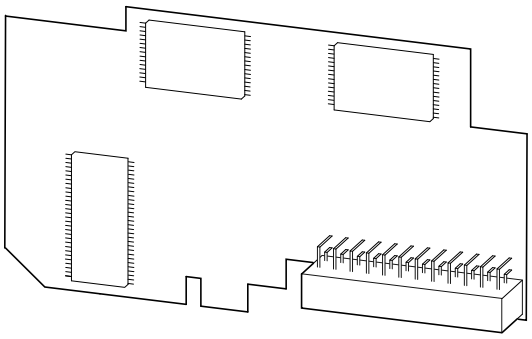

Note: The DeviceNet fieldbus internet card XMX-NET-DN-A is not supplied with the M-Max frequency inverter.

The XMX-NET-DN-A enables the connection (slave) of frequency inverters of the M-Max series to the standard DeviceNet fieldbus.

Note: The optional MMX-NET-XA mounting frame is required for mounting and connecting the M-Max frequency inverter.

Cables, Fuses and Disconnect Devices

The cross-sections of the cables and cable protection fuses used must correspond with local standards.

For an installation in accordance with UL Standards, the fuses and copper cable that are UL-approved and have a heat-resistance of 60–75°C are to be used.

Use power cables with insulation according to the specified mains voltages for the permanent installation. A shielded cable is not required on the mains side. On the motor side however, a complete (360°) low-impedance shielded cable is necessary.

The length of the motor cable depends on the radio interference class and is a maximum of 30m at M-Max.

CAUTION

Fuses and cables selected must always comply with the applicable regulations at the installation site.

Maximum Cross-Sections

	L1, L2/N, L3		U, V, W		PE		R+, R—	
	mm²	AWG ①	mm²	AWG ①	mm²	AWG ①	mm²	AWG ①
MMX11AA1D7… MMX11AA2D4… MMX11AA2D8… MMX11AA3D7…	2 x 2.5	2 x 14	3 x 2.5	3 x 14	2.5	14	—	—
MMX11AA4D8…	2 x 6	2 x 10	3 x 6	3 x 10	—	—	—	—
MMX12AA1D7… MMX12AA2D4… MMX12AA2D8… MMX12AA3D7…	2 x 1.5	2 x 16	3 x 1.5	3 x 16	1.5	16	—	—
MMX12AA4D8… MMX12AA7D0…	2 x 2.5	2 x 14	3 x 2.5	3 x 14	2.5	14	—	—
MMX12AA9D6…	2 x 6	2 x 10	3 x 6	3 x 10	6	10	—	—
MMX32AA1D7… MMX32AA2D4… MMX32AA2D8… MMX32AA3D7…	3 x 1.5	3 x 16	3 x 1.5	3 x 16	1.5	16	—	—
MMX32AA4D8… MMX32AA7D0…	3 x 1.5	3 x 16	3 x 1.5	3 x 16	1.5	16	—	—
MMX32AA011…	3 x 2.5	3 x 14	3 x 2.5	3 x 14	2.5	14	2 x 2.5	2 x 14
MMX32AA012…	3 x 6	3 x 10	3 x 6	3 x 10	6	10	2 x 6	2 x 10
MMX32AA017… MMX32AA025…	3 x 6	3 x 10	3 x 6	3 x 10	6	10	2 x 6	2 x 10
MMX32AA031… MMX32AA038…	3 x 10	3 x 8	3 x 8	3 x 8	10	8	2 x 10	2 x 8
MMX34AA1D3… MMX34AA1D9… MMX34AA2D4… MMX34AA3D3…	3 x 1.5	3 x 16	3 x 1.5	3 x 16	1.5	16	— 2 x 1.5	— 2 x 16
MMX34AA4D3… MMX34AA5D6…	3 x 1.5	3 x 16	3 x 1.5	3 x 16	1.5	16	2 x 1.5	2 x 16
MMX34AA7D6… MMX34AA9D0… MMX34AA012	3 x 2.5	3 x 14	3 x 2.5	3 x 14	2.5	14	2 x 2.5	2 x 14
MMX34AA014…	3 x 4	3 x 12	3 x 12	3 x 12	4	12	3 x 4	2 x 12
MMX34AA016… MMX34AA023…	3 x 6	3 x 10	3 x 6	3 x 10	6	10	2 x 6	2 x 10
MMX34AA031…	3 x 10	3 x 8	3 x 8	3 x 8	10	8	2 x 10	2 x 8
MMX34AA038…	3 x 10	3 x 6	3 x 8	3 x 6	10	6	2 x 10	2 x 6
MMX35AA1D7… MMX35AA2D7…	3 x 1.5	3 x 16	3 x 1.5	3 x 16	1.5	16	2 x 1.5	2 x 16
MMX35AA3D9… MMX35AA6D1… MMX35AA9D0…	3 x 2.5	3 x 14	3 x 2.5	3 x 14	2.5	14	2 x 2.5	2 x 14

Notes

① AWG = American Wire Gauge.
② UL fuse with AWG.

Specified Fuses and Disconnect Devices

Part No. M-Max	Maximum permitted line supply voltage U_{LN} [V]	VDE [A]	UL [A] ①	Type Designation ②	Type Designation/Catalog No. ②
MMX11AA1D7…	1 AC 120V +10%	20	20	FAZ-B20/1N	—
MMX11AA2D4…	1 AC 120V +10%	20	20	FAZ-B20/1N	—
MMX11AA2D8…	1 AC 120V +10%	20	20	FAZ-B20/1N	—
MMX11AA3D7…	1 AC 120V +10%	20	20	FAZ-B20/1N	—
MMX11AA4D8…	1 AC 120V +10%	32	30	FAZ-B32/1N	—
MMX12AA1D7…	1 AC 240V +10%	10	10	FAZ-B10/1N	—
MMX12AA2D4…	1 AC 240V +10%	10	10	FAZ-B10/1N	—
MMX12AA2D8…	1 AC 240V +10%	10	10	FAZ-B10/1N	—
MMX12AA3D7…	1 AC 240V +10%	10	10	FAZ-B101/N	—
MMX12AA4D8…	1 AC 240V +10%	20	20	FAZ-B20/1N	—
MMX12AA7D0…	1 AC 240V +10%	20	20	FAZ-B20/1N	—
MMX12AA9D6…	1 AC 240V +10%	32	30	FAZ-B32/1N	—
MMX32AA1D7…	3 AC 240V +10%	6	6	FAZ-B6/3	PKM0-6.3/XTPM6P3BNL
MMX32AA2D4…	3 AC 240V +10%	6	6	FAZ-B6/3	PKM0-6.3/XTPM6P3BNL
MMX32AA2D8…	3 AC 240V +10%	6	6	FAZ-B6/3	PKM0-6.3/XTPM6P3BNL
MMX32AA3D7…	3 AC 240V +10%	6	6	FAZ-B6/3	PKM0-6.3/XTPM6P3BNL
MMX32AA4D8…	3 AC 240V +10%	10	10	FAZ-B10/3	PKM0-10/XTPM010BNL
MMX32AA7D0…	3 AC 240V +10%	10	10	FAZ-B10/3	PKM0-10/XTPM010BNL
MMX32AA011…	3 AC 240V +10%	20	20	FAZ-B20/3	PKM0-20/XTPM020BNL
MMX32AA012…	3 AC 240V +10%	20	20	FAZ-B20/3	PKM0-20/XTPM020BNL
MMX32AA017…	3 AC 240V +10%	25	25	FAZ-B25/3	PKM0-25/XTPM025BNL
MMX32AA025…	3 AC 240V +10%	32	40	FAZ-B32/3	PKM0-32/XTPM032BNL
MMX32AA031…	3 AC 240V +10%	40	40	FAZ-B40/3	PKM4-40/XTPM040BNL
MMX32AA038…	3 AC 240V +10%	50	50	FAZ-B50/3	PKM4-50/XTPM050BNL
MMX34AA1D3…	3 AC 480V +10%	6	6	FAZ-B6/3	PKM0-6.3/XTPM6P3BNL
MMX34AA1D9…	3 AC 480V +10%	6	6	FAZ-B6/3	PKM0-6.3/XTPM6P3BNL
MMX34AA2D4…	3 AC 480V +10%	6	6	FAZ-B6/3	PKM0-6.3/XTPM6P3BNL
MMX34AA3D3…	3 AC 480V +10%	6	6	FAZ-B6/3	PKM0-6.3/XTPM6P3BNL
MMX34AA4D3…	3 AC 480V +10%	10	10	FAZ-B10/3	PKM0-10/XTPM010BNL
MMX34AA5D6…	3 AC 480V +10%	10	10	FAZ-B10/3	PKM0-10/XTPM010BNL
MMX34AA7D6…	3 AC 480V +10%	20	20	FAZ-B20/3	PKM0-20/XTPM020BNL
MMX34AA9D0…	3 AC 480V +10%	20	20	FAZ-B20/3	PKM0-20/XTPM020BNL
MMX34AA012…	3 AC 480V +10%	20	20	FAZ-B20/3	PKM0-20/XTPM020BNL
MMX34AA014…	3 AC 480V +10%	25	25	FAZ-B25/3	PKM0-25/XTPM025BNL
MMX34AA016…	3 AC 480V +10%	25	25	FAZ-B25/3	PKM0-25/XTPM025BNL
MMX34AA023…	3 AC 480V +10%	32	40	FAZ-B32/3	PKM0-32/XTPM032BNL
MMX34AA031…	3 AC 480V +10%	40	40	FAZ-B40/3	PKM4-40/XTPM040BNL
MMX34AA038…	3 AC 480V +10%	50	50	FAZ-B50/3	PKM4-50/XTPM050BNL
MMX35AA1D7…	3 AC 575V +10%	6	6	FAZ-B6/3	PKM0-6.3/XTPM6P3BNL
MMX35AA2D7…	3 AC 575V +10%	6	6	FAZ-B6/3	PKM0-6.3/XTPM6P3BNL
MMX35AA3D9…	3 AC 575V +10%	6	6	FAZ-B6/3	PKM0-6.3/XTPM6P3BNL
MMX35AA6D1…	3 AC 575V +10%	10	10	FAZ-B10/3	PKM0-10/XTPM010BNL
MMX35AA9D0…	3 AC 575V +10%	20	20	FAZ-B20/3	PKM0-20/XTPM020BNL

Notes

① Fuse UL-rated, Class J, 600V.

② I_{cn} 10 kA.

List of Parameters

The abbreviations used in the parameter lists have the following meaning:

PNU	Parameter number
ID	Identification number of the parameter
RUN	Access to the parameters during operation (RUN): ✓ = Modification permissible, X = Modification only possible in STOP
ro/rw	Parameter read and write permissions via a fieldbus connection (BUS): ro = read only rw = read and write
FS	Factory setting of the parameters
User setting	User setting of the parameters

Quick Configuration (Basis)

When first switching on or after activating the default settings (S4.2 = 1), you are guided step by step through the provided parameters by the quick start assistant. The defined values are confirmed with the OK button or they can be changed to suit your application and the motor data.

The quick start assistant can be switched off in the first parameter (P1.1) by entering a zero (access to all parameters).

In parameter P1.2, you can switch to the specified application setting with the quick start assistant (see table on **Page 40**).

The quick start assistant ends this first cycle by automatically switching to frequency display (M1.1 = 0.00 Hz).

By selecting the parameter level (PAR) again, besides the selected parameters for the quick configuration, the system parameters (S) are also shown in other cycles.

Quick Start Parameter Guide (Full parameter guide begins on Page 164)

PNU	ID	Access RUN	ro/rw	Designation	Value Range	Page	FS (P1.3)	User Setting
P1.1	115	✓	**rw**	Quick start parameters	**0** = All parameters (disable) **1** = Only quick configuration parameters (enable)	**67**	1	
P1.2	540	X	**rw**	Application	**0** = Basic **1** = Pump drive **2** = Fan drive **3** = High load	**67**	0	
P1.3	1472	X	**rw**	Country specific default settings	**0** = EU **1** = NA	**67**	1	
P6.1	125	✓	**rw**	Primary remote control source	**1** = Control signal terminals (I/O) **2** = Control unit (KEYPAD) **3** = Fieldbus (BUS)	**82**	0	
P6.2	117	✓	**rw**	Primary remote speed reference	**0** = Fixed frequency (FF0) **1** = Control unit (KEYPAD) **2** = Fieldbus (BUS) **3** = AI1 (analog setpoint 1) **4** = AI2 (analog setpoint 2) **5** = Motor potentiometer	**82**	3	
P6.3	101	X	**rw**	Minimum frequency	0.00–P6.4 Hz	**83**	0.00	
P6.4	102	X	**rw**	Maximum frequency	P6.3–320.00 Hz	**83**	60.00	
P6.5	103	X	**rw**	Primary acceleration time (acc1)	0.1–3000s	**83**	3.0	
P6.6	104	X	**rw**	Primary deceleration time (dec1)	0.1–3000s	**83**	3.0	
P6.7	505	X	**rw**	Start function	**0** = Acceleration time (ramp) **1** = Flying restart circuit	**84**	0	
P6.8	506	X	**rw**	Stop function	**0** = Fee coasting **1** = Deceleration time (ramp)	**84**	0	

Quick Start Parameter Guide, continued (Full parameter guide begins on Page 161)

PNU	ID	Access RUN	ro/rw	Designation	Value Range	Page	FS (P1.3)	User Setting
P7.1	113	X	**rw**	Motor, rated operational current	0.2 x I_e–2 x I_e (see motor rating plate)	**89**	I_e	
P7.3	112	X	**rw**	Motor, rated speed	300–20000 RPM (see motor rating plate)	**89**	1720	
P7.4	120	X	**rw**	Motor, power factor (cos φ)	0.30–1.00 (see motor rating plate)	**89**	0.85	
P7.5	110	X	**rw**	Motor, rated operating voltage	180– 500V (see motor rating plate)	**89**	①	
P7.6	111	X	**rw**	Motor, rated frequency	30–320 Hz (see motor rating plate)	**89**	60.00	
P11.7	109	X	**rw**	Torque increase	0 = Deactivated 1 = Enabled	**109**	0	
M1.1	1	X	**ro**	Output frequency	Hz	**127**	0.00	

System Parameters in the Quick Start

PNU	ID	Access RUN	ro/rw	Designation	Value Range	Page	FS (P1.3)	User Setting
S1.1	833	X	**ro**	API SW ID	—	**125**	—	
S1.2	834	X	**ro**	API SW Version	—	**125**	—	
S1.3	835	X	**ro**	Power SW ID	—	**125**	—	
S1.4	836	X	**ro**	Power SW Version	—	**125**	—	
S1.5	837	X	**ro**	Application ID	—	**125**	—	
S1.6	838	X	**ro**	Application revision	—	**125**	—	
S1.6	838	X	**ro**	System load	—	**125**	—	
S2.1 ②	808	X	**ro**	Communication status	RS485 in xx.yyy format **xx** = Number of error messages (0–64) **yyy** = Number of correct messages (0–999)	**125**		
S2.2 ②	809	✓	**rw**	Fieldbus protocol	**0** = FB disabled **1** = Modbus	**125**	0	
S2.3 ②	810	✓	**rw**	Slave address	1–255	**125**	1	
S2.4 ②	811	✓	**rw**	Baud rate	**0** = 300 **1** = 600 **2** = 1200 **3** = 2400 **4** = 4800 **5** = 9600	**125**	5	

Notes

① Factory settings dependent on specific drive selected.

② These parameters are overwritten with the bus-specific parameters when a fieldbus connection (for example, CANopen) is used. The parameter values described in the manual of the fieldbus interface then apply.

System Parameters in the Quick Start, continued

PNU	ID	Access RUN	ro/rw	Designation	Value Range	Page	FS (P1.3)	User Setting
S2.6	813	✓	**rw**	Parity type	**0** = None, no, see 2 stop bits **1** = Even, see 1 stop bit **2** = Odd, see 1 stop bit	**126**	0	
S2.7	814	✓	**rw**	Communication timeout	**0** = Not used **1** = 1s **2** = 2s …255 = up to 255s	**126**	0	
S2.8	815	✓	**rw**	Reset communication status	**0** = Not used **1** = Resets parameter S2.1	**126**	0	
S3.1	827	X	**ro**	MWh counter	MWh	**126**	—	
S3.2	828	X	**ro**	Operating days (d)	0–0000 days	**126**	—	
S3.3	829	X	**ro**	Operating hours (h)	0–24 h	**126**	—	
S3.4	840	X	**ro**	RUN counter, days	0–0000 days	**126**	—	
S3.5	841	X	**ro**	RUN counter, hours	0–24 h	**126**	—	
S3.6	842	X	**ro**	Fault/alarm counter	Trip Counter: 0–0000	**126**	—	
S4.1	830	✓	**rw**	Display contrast	0–15	**126**	7	
S4.2	831	X	**rw**	Restore factory defaults	**0** = Factory setting or changed value **1** = Restores factory settings for all parameters	**126**	0	
S4.3	832	✓	**rw**	Password	0000–9999	**126**	0000	

Default I/O

Designation	Terminal	Function	Parameter
DI1	8	Start Fwd	P3.1, P3.2
DI2	9	Stop/Start Rev	P3.1, P3.3
DI3	10	Fixed Frequency B0 (12 Hz)	P3.9, P10.2
DI4	14	Fixed Frequency B1 (18 Hz)	P3.10. P10.3
DI5	15	Fault Reset	P3.7

Designation	Terminal	Function	Parameter
DI6	16	PID Controller Deactivate	P3.12
RO1 (NO)	22/23	Run	P5.1, P5.10
RO2 (NO/NC)	24/25/26	Fault	P5.2, P5.11
DO	13	Ready	P5.3, P5.9

All Parameters

When first switching on or after activating the default settings (S4.2 = 1) parameter P1.1 must be set to 0 for access to all parameters.

Parameter Selection

PNU	ID	Access RUN	ro/rw	Designation	Value Range	Page	FS (P1.3)	User Setting
P1.1	115	✓	**rw**	Quick start parameters	**0** = All parameters **1** = Only quick configuration parameters	**66/67**	1	
P1.2	540	X	**rw**	Application	**0** = Basic **1** = Pump drive **2** = Fan drive **3** = High load	**67**	0	
P1.3	1472	X	**rw**	Country specific default settings	**0** = EU **1** = USA	**67**	1	

Analog Input

PNU	ID	Access RUN	ro/rw	Designation	Value Range	Page	FS (P1.3)	User Setting
P2.1	379	✓	**rw**	AI1 signal range (analog input)	(microswitch S2) **0** = 0–10V/0–20 mA **1** = 2–10V/4–20 mA	**68**	0	
P2.2	380	✓	**rw**	AI1 custom minimum	–100.00 to 100.00%	**68**	0	
P2.3	381	✓	**rw**	AI1 custom maximum	–100.00 to 100.00%	**68**	100	
P2.4	378	✓	**rw**	AI1, filter time	0.0–10.0s	**68**	0.1	
P2.5	390	✓	**rw**	AI2 signal range (analog input)	(microswitch S3) Like P2.1	**69**	1	
P2.6	391	✓	**rw**	AI2 custom minimum	–100.00 to 100.00%	**69**	0	
P2.7	392	✓	**rw**	AI2 custom maximum	–100.00 to 100.00%	**69**	100	
P2.8	389	✓	**rw**	AI2, filter time	0.0–10.0s	**69**	0.1	

Digital Input

PNU	ID	Access RUN	ro/rw	Designation	Value Range	Page	FS (P1.3)	User Setting
P3.1	300	✓	**rw**	Start/Stop-Logic	**0** = DI1 (FWD), DI2 (REV), REAF **1** = DI1 (FWD) + DI2 = REV **2** = DI1 (Start pulse), DI2 (stop pulse) **3** = DI1 (FWD), DI2 (REV)	**72**	3	
P3.2	403	✓	**rw**	Start signal/Start FWD (1)	**0** = Deactivated **1** = Activated via control signal terminal 8 (DI1) **2** = Activated via control signal terminal 9 (DI2) **3** = Activated via control signal terminal 10 (DI3) **4** = Activated via control signal terminal 14 (DI4) **5** = Activated via control signal terminal 15 (DI5) **6** = Activated via control signal terminal 16 (DI6)	**72**	1	
P3.3	404	✓	**rw**	STOP signal/Start REV (1)	Like P3.2	**72**	2	
P3.4	412	✓	**rw**	Reverse	Like P3.2	**72**	0	
P3.5	405	X	**rw**	Ext. fault close (N/O)	Like P3.2	**72**	0	
P3.6	406	X	**rw**	Ext. fault open (N/C)	Like P3.2	**73**	0	
P3.7	414	✓	**rw**	Fault reset	Like P3.2	**73**	5	
P3.8	407	✓	**rw**	Run enable	Like P3.2	**73**	0	
P3.9	419	✓	**rw**	Fixed frequency, binary value B0	Like P3.2	**73**	3	
P3.10	420	✓	**rw**	Fixed frequency, binary value B1	Like P3.2	**73**	4	
P3.11	421	✓	**rw**	Fixed frequency, binary value B2	Like P3.2	**73**	0	
P3.12	1020	✓	**rw**	PID controller deactivate	Like P3.2	**74**	6	
P3.13	1400	—	—	(Not used)	—	—	—	
P3.14	1401	✓	**rw**	External brake, feedback signal (N/O)	Like P3.2	**74**	0	
P3.15	1402	✓	**rw**	Change acceleration/ deceleration time (acc 2/dec 2)	Like P3.2	**74**	0	
P3.16	1403	✓	**rw**	Stop acceleration/deceleration time	Like P3.2	**74**	0	
P3.17	1404	✓	**rw**	Block parameter access	Like P3.2	**74**	0	
P3.18	1405	✓	**rw**	Motor potentiometer, increase value	Like P3.2	**74**	0	
P3.19	1406	✓	**rw**	Motor potentiometer, decrease value	Like P3.2	**74**	0	

Digital Input, continued

PNU	ID	Access RUN	ro/rw	Designation	Value Range	Page	FS (P1.3)	User Setting
P3.20	1407	✓	**rw**	Motor potentiometer, set value to zero	Like P3.2	**74**	0	
P3.21	1408	✓	**rw**	PLC program start	Like P3.2	**74**	0	
P3.22	1409	✓	**rw**	PLC program pause	Like P3.2	**75**	0	
P3.23	1410	✓	**rw**	Counter, input signal	Like P3.2	**75**	0	
P3.24	1411	✓	**rw**	Counter, reset	Like P3.2	**75**	0	
P3.25	1412	✓	**rw**	Activate secondary remote control source	Like P3.2	**75**	0	
P3.26	1413	✓	**rw**	Activate secondary remote speed reference	Like P3.2	**75**	0	
P3.27	1414	✓	**rw**	Activate second parameter set (2PS)	Like P3.2	**75**	0	
P3.28	1415	✓	**rw**	Fieldbus, remote input	Like P3.2	**75**	0	
P3.29	1416	✓	**rw**	Counter reference value 1	0–65535	**75**	0	
P3.30	1417	✓	**rw**	Counter reference value 2	0–65535	**75**	0	
P3.31	1418	✓	**rw**	DI1 logic (control signal terminal 8)	**0** = N/O **1** = N/C	**75**	0	
P3.32	1419	✓	**rw**	DI2 logic (control signal terminal 9)	Like P3.31	**75**	0	
P3.33	1420	✓	**rw**	DI3 logic (control signal terminal 10)	Like P3.31	**76**	0	
P3.34	1421	✓	**rw**	DI4 logic (control signal terminal 14)	Like P3.31	**76**	0	
P3.35	1422	✓	**rw**	DI5 logic (control signal terminal 15)	Like P3.31	**76**	0	
P3.36	1423	✓	**rw**	DI6 logic (control signal terminal 16)	Like P3.31	**76**	0	
P3.37	1480	✓	**rw**	Manual mode	Like P3.2	**76**	0	

Analog Output

PNU	ID	Access RUN	ro/rw	Designation	Value Range	Page	FS (P1.3)	User Setting
P4.1	307	✓	**rw**	AO signal (Analog Output)	**0** = Deactivated **1** = Output frequency (Hz) **2** = Output current (A) **3** = Torque (%) **4** = PID controller (%)	**77**	1	
P4.2	310	✓	**rw**	AO, minimum value	**0** = 0V **1** = 2V (live-zero)	**77**	1	
P4.3	1456	✓	**rw**	AO, gain	0.00–200.00%	**77**	100.00	
P4.4	1477	✓	**rw**	AO, filter time	0.00–10.00s	**77**	0.0	

Digital Output

PNU	ID	Access RUN	ro/rw	Designation	Value Range	Page	FS (P1.3)	User Setting
P5.1	313	✓	**rw**	RO1 Signal (Relay 1 Output)	**0** = Deactivated **1** = READY **2** = RUN **3** = FAULT **4** = Error message (inverted) **5** = ALARM **6** = REV **7** = Output frequency **8** = Motor controller active **9** = Zero frequency **10** = Frequency monitoring 1 **11** = Frequency monitoring 2 **12** = PID monitoring **13** = Overtemperature signal **14** = Overcurrent control active **15** = Overvoltage control active **16** = PLC Sequence control active **17** = PLC sequence control, single step completed **18** = PLC sequence control, program cycle completed **19** = PLC sequence control, pause **20** = Counter, value 1 reached **21** = Counter, value 2 reached **22** = RUN message active **23** = Analog min reference error **24** = LOG function fulfilled **25** = PID controller, actual value monitoring **26** = External brake actuated **27** = Current monitoring **28** = Fieldbus, remote output	**78**	2	
P5.2	314	✓	**rw**	RO2 signal (relay output 2)	Like P5.1	**79**	3	
P5.3	312	✓	**rw**	DO Signal (Digital Output)	Like P5.1	**79**	1	
P5.4	315	✓	**rw**	Frequency monitoring 1	**0** = Deactivated **1** = 0.00–P5.5 Hz **2** = P5.5–P6.4 Hz	**79**	0	
P5.5	316	✓	**rw**	Frequency monitoring 1 reference value	0.00–P6.4 Hz	**80**	0.00	
P5.6	346	✓	**rw**	Frequency monitoring 2	**0** = Deactivated **1** = 0.00–P5.7 Hz **2** = P5.7–P6.4 Hz	**80**	0	
P5.7	347	✓	**rw**	Frequency monitoring 2 reference value	0.00–P6.4 Hz	**80**	0.00	
P5.8	1457	✓	**rw**	Current monitoring	0.00–P7.2A	**81**	0.00	

Digital Output, continued

PNU	ID	Access RUN	ro/rw	Designation	Value Range	Page	FS (P1.3)	User Setting
P5.9	1458	✓	**rw**	DO logic (control signal terminal 13)	**0** = N/O **1** = N/C	**81**	0	
P5.10	1331	✓	**rw**	RO1 logic (control signal terminals 22, 23)	Like P5.9	**81**	0	
P5.11	1332	✓	**rw**	RO2 logic (control signal terminal 24, 25, 26)	Like P5.9	**81**	0	
P5.12	1459	✓	**rw**	DO, on delay	0.00–320.00s	**81**	0.00	
P5.13	1460	✓	**rw**	DO, off-delay	0.00–320.00s	**81**	0.00	
P5.14	1461	✓	**rw**	RO1, on delay	0.00–320.00s	**81**	0.00	
P5.15	1424	✓	**rw**	RO1, off-delay	0.00–320.00s	**81**	0.00	
P5.16	1425	✓	**rw**	RO2, on delay	0.00–320.00s	**81**	0.00	
P5.17	1426	✓	**rw**	RO2, off-delay	0.00–320.00s	**81**	0.00	

Drives Control

PNU	ID	Access RUN	ro/rw	Designation	Value Range	Page	FS (P1.3)	User Setting
P6.1	125	✓	**rw**	Primary remote control source	**1** = Control signal terminals (I/O) **2** = Operating unit (KEYPAD) **3** = Fieldbus (BUS)	**82**	1	
P6.2	117	✓	**rw**	Primary remote speed reference	**0** = Fixed frequency (FF0) **1** = Operating unit (REF) **2** = Fieldbus (BUS) **3** = AI1 **4** = AI2 **5** = Motor potentiometer	**82**	3	
P6.3	101	X	**rw**	Minimum frequency	0.00–P6.4 Hz	**83**	0.00	
P6.4	102	X	**rw**	Maximum frequency	P6.3–320.00 Hz	**83**	60.00	
P6.5	103	X	**rw**	Primary acceleration time (acc1)	0.1–3000s	**83**	3.0	
P6.6	104	X	**rw**	Primary deceleration time (dec1)	0.1–3000s	**83**	3.0	
P6.7	505	X	**rw**	Start function	**0** = Ramp, acceleration **1** = Flying restart circuit	**84**	0	
P6.8	506	X	**rw**	Stop function	**0** = Free coasting **1** = Ramp, deceleration	**84**	0	
P6.9	500	X	**rw**	S ramp	0.00 = Linear 0.1–10.0s (S-shaped)	**84**	0.0	
P6.10	717	X	**rw**	REAF, Wait time before an automatic restart	0.10–10.00s	**85**	0.50	
P6.11	718	X	**rw**	REAF, Testing period over three automatic restarts	0.00–60.00s	**85**	30.00	
P6.12	719	X	**rw**	REAF, Start function with automatic restart	**0** = Ramp, acceleration **1** = Flying restart circuit **2** = According to P6.7	**85**	0	

Drives Control, continued

PNU	ID	Access RUN	ro/rw	Designation	Value Range	Page	FS (P1.3)	User Setting
P6.13	731	X	**rw**	REAF, automatic restart after an error message	**0** = Deactivated **1** = Activated	**85**	0	
P6.14	1600	X	**rw**	Stop on direction change via the arrow buttons (</>) of the keypad (KEYPAD)	**0** = Deactivated **1** = Activated	**85**	1	
P6.15	184	X	**rw**	Keypad frequency reference (REF)	–P6.4 – +P6.4 Hz	**86**	0.00	
P6.16	1474	X	**rw**	Stop button active	**0** = Deactivated (no) **1** = Activated (yes)	**86**	1	
P6.17	1427	X	**rw**	Secondary remote control source	**1** = Control signal terminals (I/0) **2** = Control unit (KEYPAD) **3** = Fieldbus (BUS)	**86**	3	
P6.18	1428	X	**rw**	Secondary remote speed reference	**0** = Fixed frequency (FF0) **1** = Operating unit (REF) **2** = Fieldbus (BUS) **3** = AI1 **4** = AI2 **5** = Motor potentiometer	**86**	2	
P6.19	502	X	**rw**	Secondary acceleration time (acc2)	0.1–3000s	**86**	10.0	
P6.20	503	X	**rw**	Secondary deceleration time (dec2)	0.1–3000s	**86**	10.0	
P6.21	526	X	**rw**	Acceleration transition frequency (acc1–acc2)	0.00–P6.4 Hz	**86**	0.00	
P6.22	1334	X	**rw**	Deceleration transition frequency (dec1–dec2)	0.00–P6.4 Hz	**86**	0.00	
P6.23	1429	X	**rw**	REV blocked	**0** = Deactivated **1** = Activated	**86**	0	
P6.24	509	X	**rw**	Skip frequency 1, lower value	0.00–P6.25	**87**	0.00	
P6.25	510	X	**rw**	Skip frequency 1, upper value	P6.24–P6.4 Hz	**87**	0.00	
P6.26	511	X	**rw**	Skip frequency 2, lower value	0.00–P6.27	**87**	0.00	
P6.27	731	X	**rw**	Skip frequency 2, upper value	P6.26–P6.4 Hz	**87**	0.00	
P6.28	513	X	**rw**	Skip frequency 3, lower value	0.00–P6.29	**87**	0.00	
P6.29	514	X	**rw**	Skip frequency 3, upper value	P6.28–P6.4 Hz	**87**	0.00	
P6.30	759	X	**rw**	Automatic REAF attempts	1–10	**87**	3	
P6.31	1481	X	**rw**	Manual mode, primary control source	**1** = Control signal terminals (I/0) **2** = Control unit (KEYPAD) **3** = Fieldbus (BUS)	**87**	1	
P6.32	1482	X	**rw**	Manual mode, primary speed reference	**0** = Fixed frequency (FF0) **1** = Operating unit (REF) **2** = Fieldbus (BUS) **3** = AI1 **4** = AI2 **5** = Motor potentiometer	**87**	3	
P6.33	1483	X	**rw**	Manual mode, KEYPAD lock	**0** = Deactivated **1** = Activated	**87**	1	

Motor

PNU	ID	Access RUN	ro/rw	Designation	Value Range	Page	FS (P1.3)	User Setting
P7.1	113	X	**rw**	Motor, rated operational current	0.2 x I_e–2 x I_e (see motor rating plate)	**89**	I_e	
P7.2	107	X	**rw**	Current limit	0.2 x I_e–2 x I_e	**89**	1.5 x I_e	
P7.3	112	X	**rw**	Motor, rated speed	300–20000 min^{-1} (see motor rating plate)	**89**	1720	
P7.4	120	X	**rw**	Motor, power factor (cos φ)	0.30–1.00 (see motor rating plate)	**89**	0.85	
P7.5	110	X	**rw**	Motor, rated operating voltage	180–500V (see motor rating plate)	**89**	①	
P7.6	111	X	**rw**	Motor, rated frequency	30–320 Hz (see motor rating plate)	**89**	60.00	

Protective Functions

PNU	ID	Access RUN	ro/rw	Designation	Value Range	Page	FS (P1.3)	User Setting
P8.1	700	X	**rw**	Analog minimum reference error (live-zero)	**0** = Deactivated **1** = Alarm **2** = Fault, stop according to P6.8	**90**	1	
P8.2	727	X	**rw**	Undervoltage error	Like P8.1	**90**	2	
P8.3	703	X	**rw**	Ground fault	Like P8.1	**90**	2	
P8.4	709	X	**rw**	Stall protection	Like P8.1	**91**	1	
P8.5	713	X	**rw**	Underload protection	Like P8.1	**91**	0	
P8.6	704	X	**rw**	Motor, temperature protection	Like P8.1	**91**	2	
P8.7	705	X	**rw**	Motor, ambient temperature	–20° to 100°C	**91**	40	
P8.8	706	X	**rw**	Motor, cooling factor at zero frequency	0.0–150%	**91**	40	
P8.9	707	X	**rw**	Motor, thermal time constant	1–200 min	**91**	45	
P8.10	1430	X	**rw**	Analog minimum reference error, reaction time	0.0–10.0s	**93**	0.5	
P8.11	1473	X	**—**	(Not used)	—	**—**	—	
P8.12	714	X	**rw**	Underload low torque limit	10.0–150%	**93**	60.0	
P8.13	715	X	**rw**	Underload, low torque limit at zero frequency	10.0–150%	**93**	10.0	
P8.14	733	X	**rw**	Fieldbus error	Like P8.1	**94**	2	
P8.15	734	X	**rw**	Fieldbus interface error	Like P8.1	**94**	2	

Note

① Factory settings dependent on specific drive selected.

PID Controller

PNU	ID	Access RUN	ro/rw	Designation	Value Range	Page	FS (P1.3)	User Setting
P9.1	163	✓	**rw**	PID controller	**0** = Deactivated **1** = Activated for drive control **2** = Activated for external application	**95**	0	
P9.2	118	✓	**rw**	PID controllers, P gain	0.0–1000.0%	**95**	100.0	
P9.3	119	✓	**rw**	PID controller, I reset time	0.00–320.00s	**95**	10.00	
P9.4	167	✓	**rw**	PID controller setpoint, keypad reference	0.0–100.0%	**95**	0.0	
P9.5	332	✓	**rw**	PID controller, setpoint source	**0** = Keypad unit (P9.4) **1** = Fieldbus **2** = AI1 **3** = AI2	**95**	0	
P9.6	334	✓	**rw**	PID controller, process variable (PV) source (Actual value or feedback)	**0** = Fieldbus **1** = AI1 **2** = AI2	**96**	2	
P9.7	336	✓	**rw**	PID controller, actual value limiting, minimum	0.0–100.0%	**96**	0.0	
P9.8	337	✓	**rw**	PID controller, actual value limiting, maximum	0.0–100.0%	**96**	100.0	
P9.9	340	✓	**rw**	PID controller, controller deviation	**0** = Not inverted **1** = Inverted	**96**	0	
P9.10	132	✓	**rw**	PID controller, D rate time	0.00–10.0s	**96**	0.00	
P9.11	1431	✓	**rw**	PID controller, output filter, delay time	0.00–10.0s	**96**	0.0	
P9.12	1016	✓	**rw**	Sleep mode, frequency	0.00–P6.4 Hz	**96**	0.00	
P9.13	1018	✓	**rw**	Sleep mode, wake up setpoint	0.0–100.0%	**96**	25.0	
P9.14	1017	✓	**rw**	Sleep mode, delay time	0–3600s	**96**	30	
P9.15	1433	✓	**rw**	Hysteresis, upper limit	0.0–100.0%	**97**	0.0	
P9.16	1434	✓	**rw**	Hysteresis, lower limit	0.0–100.0%	**97**	0.0	
P9.17	1435	✓	**rw**	PID controller, max. controller deviation	0.0–100.0%	**97**	3.0	
P9.18	1475	✓	**rw**	PID controller, reference value scaling	0.1–32.7	**97**	1.0	
P9.19	1476	✓	**rw**	PID controller, process value scaling	0.1–32.7	**97**	1.0	
P9.20	1478	✓	**rw**	PID controller, output signal limit	0.00–100.0%	**97**	100.0	

Fixed Frequencies

PNU	ID	Access RUN	ro/rw	Designation	Value Range	Page	FS (P1.3)	User Setting
P10.1	124	✓	**rw**	Fixed frequency FF0	0.00–P6.4 Hz	**101**	6.00	
P10.2	105	✓	**rw**	Fixed frequency FF1	0.00–P6.4 Hz	**101**	12.00	
P10.3	106	✓	**rw**	Fixed frequency FF2	0.00–P6.4 Hz	**101**	18.00	
P10.4	126	✓	**rw**	Fixed frequency FF3	0.00–P6.4 Hz	**101**	24.00	
P10.5	127	✓	**rw**	Fixed frequency FF4	0.00–P6.4 Hz	**101**	30.00	
P10.6	128	✓	**rw**	Fixed frequency FF5	0.00–P6.4 Hz	**101**	36.00	
P10.7	129	✓	**rw**	Fixed frequency FF6	0.00–P6.4 Hz	**101**	48.00	
P10.8	130	✓	**rw**	Fixed frequency FF7	0.00–P6.4 Hz	**101**	60.00	
P10.9	1436	✓	**rw**	PLC Sequence control, operating mode	**0** = Deactivated **1** = Program cycle, execute once **2** = Execute program cycle continuously **3** = Execute program cycle in steps **4** = Execute program cycle continuously in steps	**102**	0	
P10.10	1437	✓	**rw**	PLC Sequence control, program (FWD/REV)	0–255	**102**	0	
P10.11	1438	✓	**rw**	Set time for FF0	0–10000s	**103**	0	
P10.12	1439	✓	**rw**	Set time for FF1	0–10000s	**103**	0	
P10.13	1440	✓	**rw**	Set time for FF2	0–10000s	**103**	0	
P10.14	1441	✓	**rw**	Set time for FF3	0–10000s	**103**	0	
P10.15	1442	✓	**rw**	Set time for FF4	0–10000s	**103**	0	
P10.16	1443	✓	**rw**	Set time for FF5	0–10000s	**103**	0	
P10.17	1444	✓	**rw**	Set time for FF6	0–10000s	**103**	0	
P10.18	1445	✓	**rw**	Set time for FF7	0–10000s	**103**	0	

V/Hz-Characteristic Curve

PNU	ID	Access RUN	ro/rw	Designation	Value Range	Page	FS (P1.3)	User Setting
P11.1	108	X	**rw**	V/Hz characteristic curve	**0** = Linear **1** = Squared **2** = Configurable	**107**	0	
P11.2	602	X	**rw**	Cut-off frequency	30.00–320.00 Hz	**108**	60.00	
P11.3	603	X	**rw**	Output voltage	10.00–200.00% of the motor rated voltage (P6.5)	**108**	100.00	
P11.4	604	X	**rw**	V/Hz characteristic curve, mean frequency value	0.00–P11.2 Hz	**109**	60.00	
P11.5	605	X	**rw**	V/Hz characteristic curve, mean voltage value	0.00–P11.3%	**109**	100.00	
P11.6	606	X	**rw**	Output voltage at 0 Hz	0.00–40.00%	**109**	0.00	
P11.7	109	X	**rw**	Torque increase	**0** = Deactivated **1** = Enabled	**109**	0	
P11.8	600	X	**rw**	Control mode	**0** = Frequency control (V/Hz) **1** = Speed control with slip compensation	**109**	0	
P11.9	601	X	**rw**	Carrier frequency	1.5–16.0 kHz	**111**	6.0	
P11.10	522	X	**rw**	Sine-wave filter (constant carrier frequency)	**0** = Deactivated **1** = Enabled	**111**	0	

Braking

PNU	ID	Access RUN	ro/rw	Designation	Value Range	Page	FS (P1.3)	User Setting
P12.1	507	X	**rw**	DC braking, current	0.2 x I_e–2 x I_e	**112**	I_e	
P12.2	516	X	**rw**	DC braking, braking time at start	0.00–600.00s	**112**	0.00	
P12.3	515	X	**rw**	DC braking, start frequency	0.00–10.00 Hz	**113**	1.50	
P12.4	508	X	**rw**	DC braking, braking time at STOP	0.00–600.00s	**114**	0.00	
P12.5	504	X	**rw**	Brake chopper	(Only active and visible with braking transistor installed) **0** = Deactivated **1** = Automatic activation in operation (RUN) **2** = Automatic activation in operation (RUN) and upon stop (STOP)	**116**	0	
P12.6	1447	X	**rw**	Brake chopper, DC bus switching threshold	(Only active and visible with braking transistor installed) 0–870V	**116**	0	
P12.7	1448	X	**rw**	External brake, delay time opening	0.00–320.00s	**117**	0.20	
P12.8	1449	X	**rw**	External brake, frequency threshold opening	0.00–P6.4 Hz	**117**	1.50	
P12.9	1450	X	**rw**	External brake, frequency threshold closing	0.00–P6.4 Hz	**117**	1.00	
P12.10	1451	X	**rw**	External brake, frequency threshold REV closing	0.00–P6.4 Hz	**117**	1.50	
P12.11	1452	X	**rw**	External brake, current limit opening	0.00–P7.2 A	**117**	0.00	

Logic Function

PNU	ID	Access RUN	ro/rw	Designation	Value Range	Page	FS (P1.3)	User Setting
P13.1	1453	X	**rw**	LOG function, Selection input A	**0** = Deactivated **1** = READY **2** = RUN **3** = FAULT **4** = Error message (inverted) **5** = ALARM **6** = REV **7** = Output frequency = frequency setpoint **8** = Motor controller active **9** = Zero frequency **10** = Frequency monitoring 1 **11** = Frequency monitoring 2 **12** = PID monitoring **13** = Overtemperature signal **14** = Overcurrent control active **15** = Overvoltage control active **16** = PLC sequence control active **17** = PLC sequence control, single step completed **18** = PLC sequence control, program cycle completed **19** = PLC Sequence control, pause **20** = Counter, value 1 reached **21** = Counter, value 2 reached **22** = RUN message active **23** = Analog min. reference error **24** = LOG function fulfilled **25** = PID controller, actual value monitoring **26** = External brake actuated **27** = Current monitoring **28** = Fieldbus, remote output	**119**	0	
P13.2	1454	X	**rw**	LOG function, Selection input B	Like P13.1	**120**	0	
P13.3	1455	X	**rw**	LOG function, select operation	**0** = A AND B **1** = A OR B **2** = A XOR B	**120**	0	

Second Parameter Set

PNU	ID	Access RUN	ro/rw	Designation	Value Range	Page	FS (P1.3)	User Setting
P14.1	1347	X	**rw**	Motor rated current (2PS)	0.2 x I_e–2 x I_e (see motor rating plate)	**121**	I_e	
P14.2	1352	X	**rw**	Current limit (2PS)	0.2 x I_e–2 x I_e	**121**	1.5 x I_e	
P14.3	1350	X	**rw**	Motor rated speed (2PS)	300 … 20000 min^{-1} (see motor rating plate)	**121**	①	
P14.4	1351	X	**rw**	Motor power factor (cos φ) (2PS)	0.30–1.00 (see motor rating plate)	**121**	①	
P14.5	1348	X	**rw**	Motor rated operating voltage (2PS)	180–500V (see motor rating plate)	**121**	①	
P14.6	1349	X	**rw**	Motor nominal frequency (2PS)	30–320 Hz (see motor rating plate)	**121**	60.00	
P14.7	1343	X	**rw**	Minimum frequency (2PS)	0.00–P14.8 Hz	**121**	0.00	
P14.8	1344	X	**rw**	Maximum frequency (2PS)	P14.7–320.00 Hz	**121**	60.00	
P14.9	1345	X	**rw**	Acceleration time (2PS) (acc3)	0.1–3000s	**121**	3.0	
P14.10	1346	X	**rw**	Deceleration time (2PS) (dec3)	0.1–3000s	**121**	3.0	
P14.11	1355	X	**rw**	V/Hz characteristic curve (2PS)	**0** = Linear **1** = Squared **2** = Configurable	**122**	0	
P14.12	1354	X	**rw**	Torque increase (2PS)	**0** = Deactivated **1** = Activated	**122**	0	
P14.13	1353	X	**rw**	Motor temperature protection (2PS)	**0** = Deactivated **1** = Alarm **2** = Fault, stop according to P6.8	**122**	0	
P14.14	1469	X	**rw**	Motor ambient temperature (2PS)	–20° to 100°C	**122**	40	
P14.15	1470	X	**rw**	Motor cooling factor at zero frequency (2PS)	0.0–150%	**122**	40.0	
P14.16	1471	X	**rw**	Motor thermal time constant (2PS)	1–200 min	**122**	45	

Note

① Factory settings dependent on specific drive selected.

System Parameters

PNU	ID	Access RUN	ro/rw	Designation	Value Range	Page	FS (P1.3)	User Setting
Hard- and Software Information								
S1.1	833	X	**ro**	API SW ID	—	**125**	0	
S1.2	834	X	**ro**	API SW Version	—	**125**	0	
S1.3	835	X	**ro**	Power SW ID	—	**125**	0	
S1.4	836	X	**ro**	Power SW Version	—	**125**	0	
S1.5	837	X	**ro**	Application ID	—	**125**	0	
S1.6	838	X	**ro**	Application revision	—	**125**	0	
S1.7	839	X	**ro**	System load	%	**125**	0	
Communication								
S2.1 ①	808	X	**ro**	Communication status	In xx.yyy format **xx** = Number of error messages (0–64) **yyy** = number of correct messages (0–999)	**125**		
S2.2 ①	809	✓	**rw**	Fieldbus protocol	**0** = FB disabled **1** = Modbus RTU	**125**	0	
S2.3 ①	810	✓	**rw**	Slave address	1–255	**125**	1	
S2.4 ①	811	✓	**rw**	Baud rate	**0** = 300 **1** = 600 **2** = 1200 **3** = 2400 **4** = 4800 **5** = 9600 **6** = 19200 **7** = 38400 **8** = 57600	**125**	5	
S2.6	813	✓	**rw**	Parity type	**0** = None, no, see 2 stop bits **1** = Even, see 1 stop bit **2** = Odd, see 1 stop bit	**126**	0	
S2.7	814	✓	**rw**	Communication timeout	**0** = Not used **1** = 1s **2** = 2s …255 = up to 255s	**126**	0	
S2.8	815	✓	**rw**	Reset communication status	**0** = Not used **1** = Resets parameter S2.1	**126**	0	

Note

① These parameters are overwritten with the bus-specific parameters when a fieldbus connection (for example, CANopen) is used. The parameter values described in the manual of the fieldbus interface then apply.

System Parameters, continued

PNU	ID	Access RUN	ro/rw	Designation	Value Range	Page	FS (P1.3)	User Setting
Unit Counter								
S3.1	827	X	**ro**	MWh counter	MWh	**126**	—	
S3.2	828	X	**ro**	Operating days (d)	0–0000 days	**126**	—	
S3.3	829	X	**ro**	Operating hours (h)	0–24 h	**126**	—	
S3.4	840	X	**ro**	RUN counter, days	0–0000 days	**126**	—	
S3.5	841	X	**ro**	RUN counter, hours	0–24 h	**126**	—	
S3.6	842	X	**ro**	Fault/alarm counter	Trip counter: 0–0000	**126**	—	
User Set								
S4.1	830	✓	**rw**	Display contrast	0–15	**126**	7	
S4.2	831	X	**rw**	Restore factory defaults	**0** = Factory setting or changed value **1** = Restores factory settings for all parameters	**126**	0	
S4.3	832	✓	**ro**	Password	0000–9999	**126**	0000	

Parameters marked with "M" (Monitor) are values currently being measured, variables calculated from these measured values, or status values from control signals.

The M parameters cannot be edited (only display values).

Parameter Values Currently Being Measured

PNU	ID	Access RUN	ro/rw	Designation	Value Range	Page	FS (P1.3)	User Setting
Display Values								
M1.1	1	**ro**		Output frequency	Hz	**127**	0.00	
M1.2	25	**ro**		Frequency reference value	Hz	**127**	0.00	
M1.3	2	**ro**		Motor shaft speed	RPM (calculated value, RPM)	**127**	0	
M1.4	3	**ro**		Motor current	A	**127**	0.00	
M1.5	4	**ro**		Motor torque	% (calculated value)	**127**	0.0	
M1.6	5	**ro**		Motor power	% (calculated value)	**127**	0.0	
M1.7	6	**ro**		Motor voltage	V	**127**	0.0	
M1.8	7	**ro**		DC bus voltage	V	**127**	0.0	
M1.9	8	**ro**		Unit temperature	°F (°C)	**127**	0	
M1.10	9	**ro**		Motor temperature	% (calculated value)	**127**	0	
M1.11	13	**ro**		Analog input 1	%	**127**	0.0	
M1.12	14	**ro**		Analog input 2	%	**127**	0.0	
M1.13	26	**ro**		Analog output 1	%	**127**	0.0	
M1.14	15	**ro**		Digital input	DI1, DI2, DI3 status	**127**	0	
M1.15	16	**ro**		Digital input	DI4, DI5, DI6 status	**128**	0	
M1.16	17	**ro**		Digital output	RO1, RO2, DO status	**128**	1	
M1.17	20	**ro**		PID reference value	%	**128**	0.0	
M1.18	21	**ro**		PID feedback	%	**128**	0.0	
M1.19	22	**ro**		PID error value	%	**128**	0.0	
M1.20	23	**ro**		PID output	%	**128**	0.0	
M1.21	1480	**ro**		Counter, digital input	—	**128**	0	

Appendix B

Door Panel Keypad Adapter System—Mounting Instructions

Overview

The door keypad is used for remote control drivers. It is installed on the door of a cabinet. For the installation, you need the following parts. See the figure below.

Door Keypad Mounting Kit

Door Keypad Components

Item	Description
1	Door keypad base
2	Text panel, cool gray
3	Door cable with attached grounding cable
4	Door panel adapter
5	Screws (4 pcs)

Note: Make sure that you have received all necessary parts.

Mounting Procedure

Door Keypad Mounting Instructions

Step	Instructions
1	Make an opening in the cabinet door for the control keypad according the dimensions on **Page 183**. Make the holes in the cabinet door for the screws using the dimensions on **Page 183**.
2	Place the control keypad base (item 1) toward the opening so that the screw holes you made in the cabinet door meet the bushings on the backside of the base. See figures below.
3	Fix the base on the cabinet door by tightening the screws (item 5).

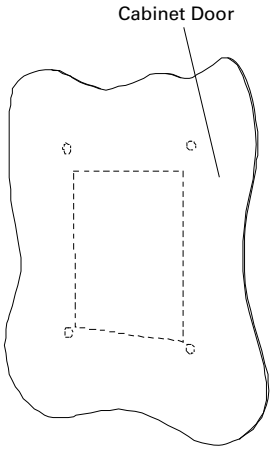

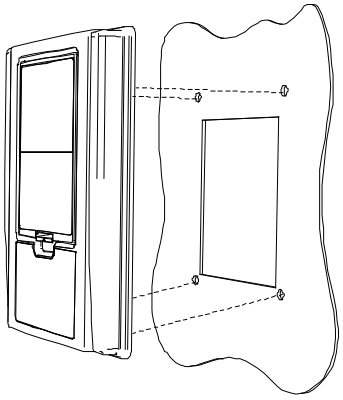

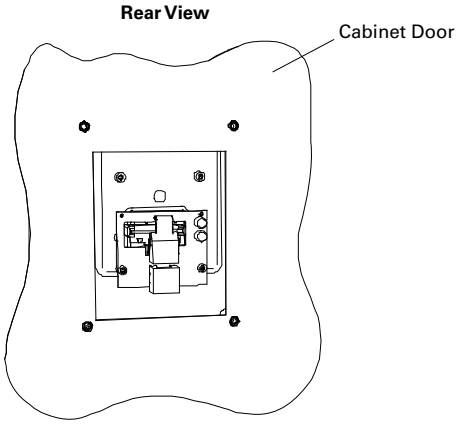

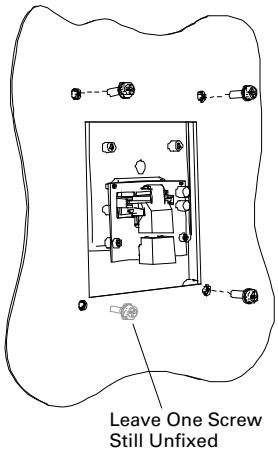

Door Keypad Mounting Instructions, continued

Step	Instructions	
4	Fix the grounding cable (item 3) against the backside of the cabinet door through one of the screw holes. **Note**: Make sure that a proper contact with the cabinet door is achieved. If necessary, remove the paint from the metal surface. Place the washers (attached to the screws) between the door and the screws. The tightening torque to be applied is 1.5 Nm. Connect the data cable (item 3) to the terminal of the keypad.	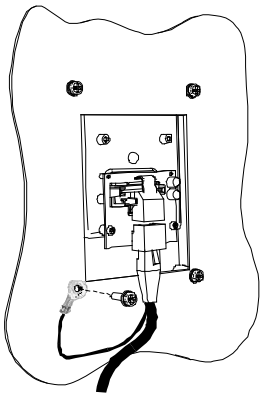
5	Assemble door panel adapter (item 4) to a cover and UART connector. After that, connect cable (item 3) to door panel adapter (item 4).	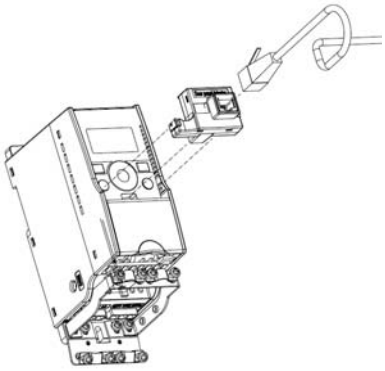
6	Assemble text panel (item 2) to door keypad base (item 1).	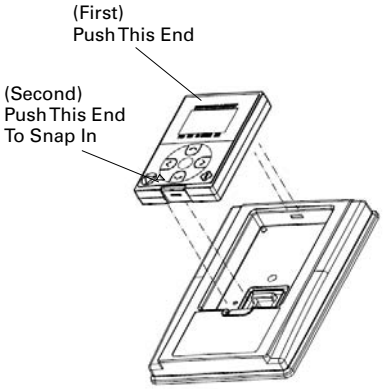

Dimensions

Approximate Dimensions in inches (mm)

The graphic is in real size. Use it to mark the cut-out for the door keypad and the holes for the screws.

Door Keypad Cut-out Dimensions

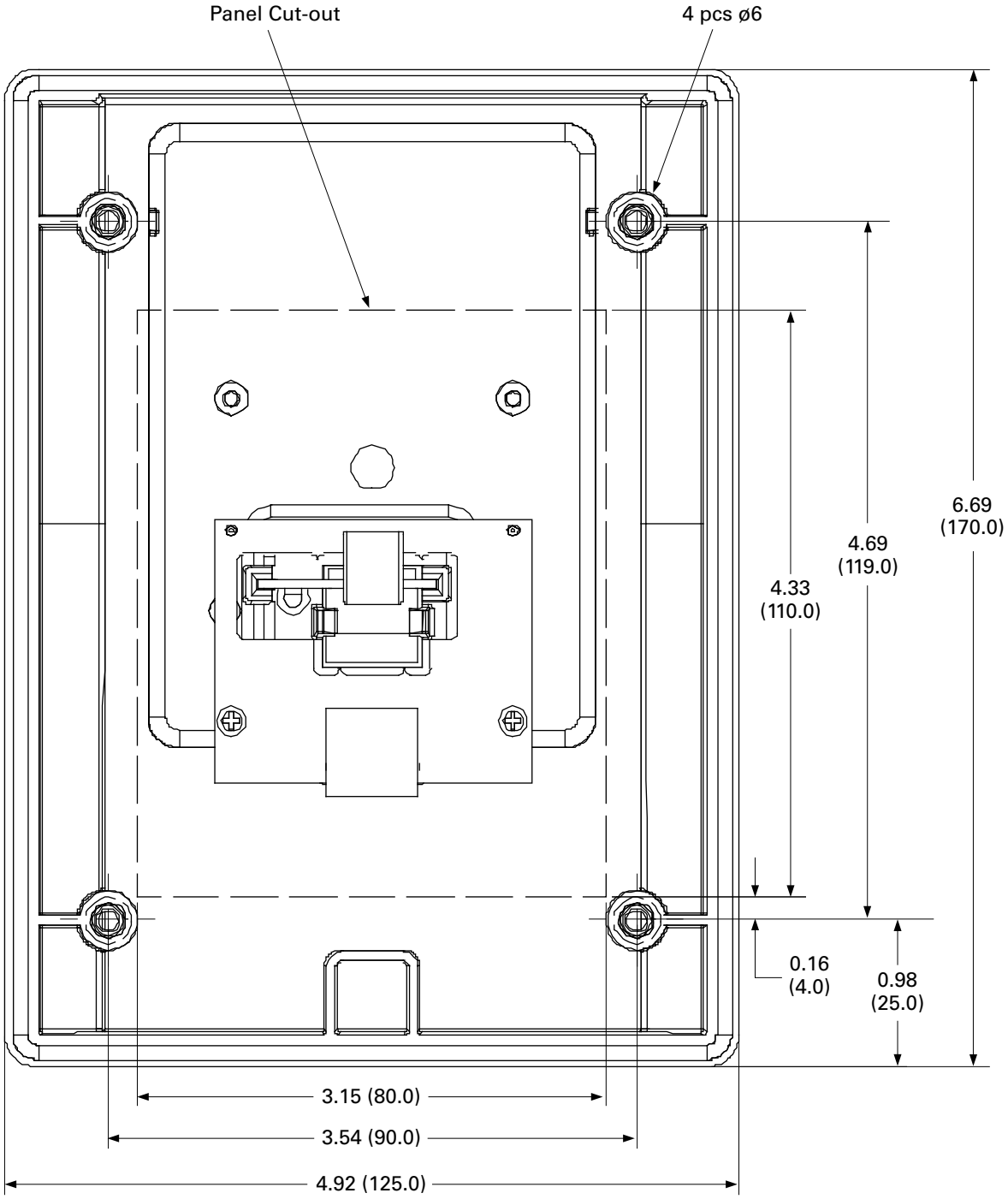

Approximate Dimensions in inches (mm)

Door Keypad Dimensions

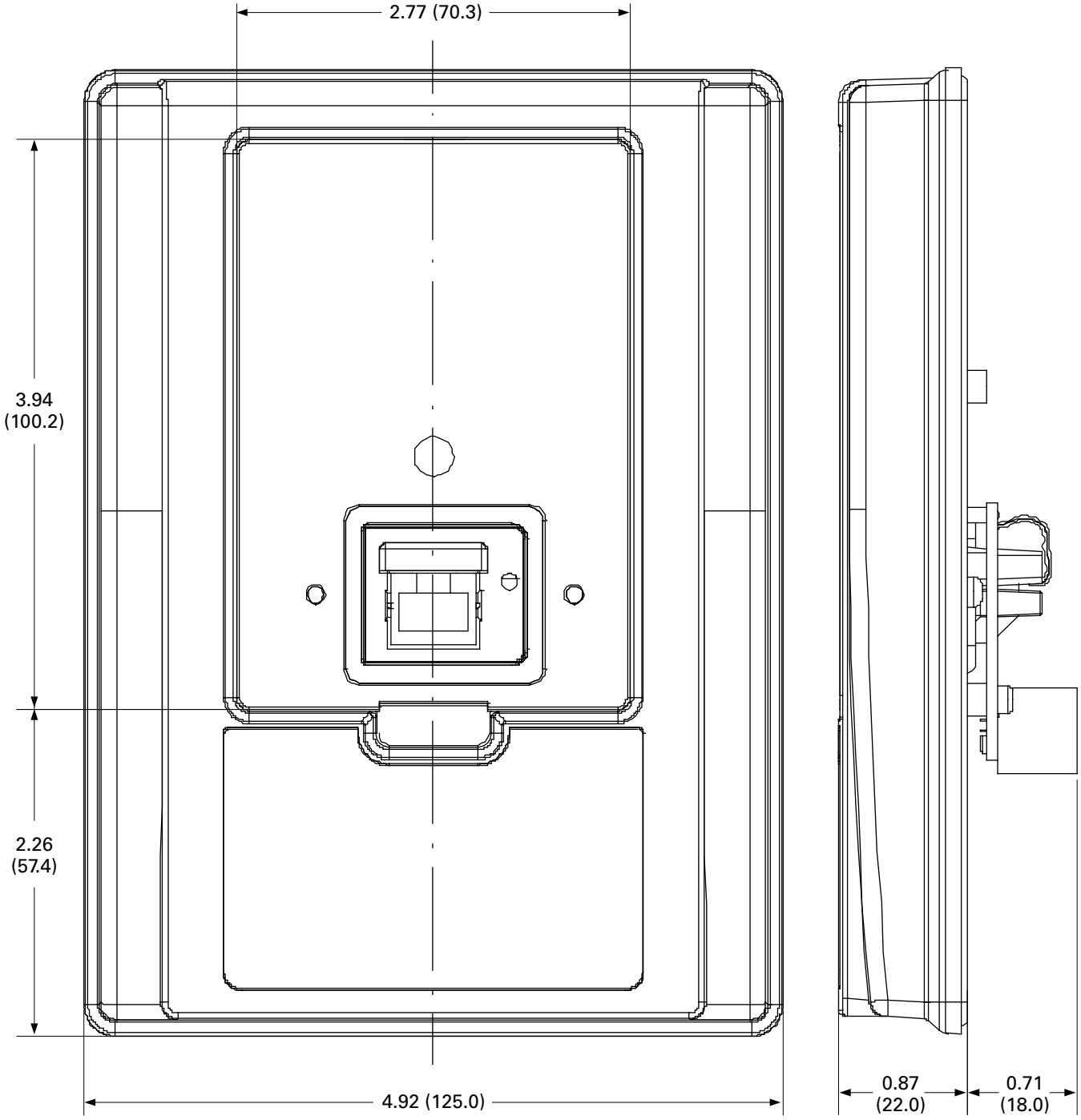

Front View **Side View**

Eaton is dedicated to ensuring that reliable, efficient and safe power is available when it's needed most. With unparalleled knowledge of electrical power management across industries, experts at Eaton deliver customized, integrated solutions to solve our customers' most critical challenges.

Our focus is on delivering the right solution for the application. But, decision makers demand more than just innovative products. They turn to Eaton for an unwavering commitment to personal support that makes customer success a top priority. For more information, **visit www.eaton.com/electrical.**

Eaton
1000 Eaton Boulevard
Cleveland, OH 44122
United States
Eaton.com

© 2013 Eaton
All Rights Reserved
Printed in USA
Publication No. MN04020003E / Z14306
October 2013

Eaton is a registered trademark.

All other trademarks are property of their respective owners.

Powering Business Worldwide