369833j 1 04.08.24

Maestro 0–10 V Dimmer Sensor

Lutron Maestro 0–10 V dimmer sensors are lighting controls with passive infrared sensors that automatically control the lights in an area. These sensors detect heat from occupants moving within an area to determine when the space is occupied. The Maestro 0–10 V dimmer sensor combines a Maestro 0–10 V dimmer with an occupancy or vacancy sensor.

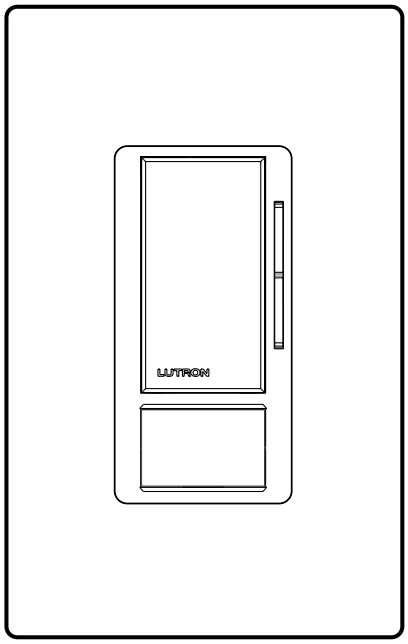

Features

- Controls 0–10 V⎓ electronic fluorescent ballasts or LED driver load types*
- Passive infrared motion detection with exclusive Lutron XCT Technology for fine motion detection
- 180° sensor field-of-view
- Up to 30 ft × 30 ft (9 m × 9 m) [900 ft^2 (81 m^2)] major motion coverage and 20 ft × 20 ft (6 m × 6 m) [400 ft^2 (36 m^2)] minor motion coverage
- Occupancy version can be set to auto-on/auto-off or manual-on/auto-off
- Vacancy version available to meet CA Title 24 requirements
- Adjustable timeout (1, 5, 15, or 30 minutes)
- Adjustable settings for auto-on light level (occupied level): 100%, 50%, last light level, or locked preset light level
- Adjustable sensitivity level: High, Med, Low, Min
- Off warning fades lights to off over a period of 10 seconds
- Advanced Maestro dimmer features available (locked preset, fade-to-on, and fade-to-off, etc.)
- Adaptive switching algorithm for extended relay life
- Smart ambient light detection (ALD)
- All models have single pole and 3-way capability
- Works with a single standard mechanical 3-way switch or up to 9 companion switches (MA-AS or MSC-AS)*
- High-end trim and low-end trim to adjust maximum and minimum light levels
- Selectable dimming curve—linear or square law
- Miswire and incompatible load alert

* When using with standard mechanical 3-way switch, some rewiring is required. Not compatible with MA-R.

Models Available

Model Number	Description	Sensor Operation	Maximum Capacity	TAA Compliant
MS-Z101-XX[1, 2]	Occupancy/vacancy Single-pole/multi-location	Auto-on/auto-off or manual-on/auto-off	8 A electronic fluorescent ballasts or LED driver[3]	No
MS-Z101-V-XX[1]	Vacancy Single-pole/ multi-location	Manual-on/auto-off ONLY	8 A electronic fluorescent ballasts or LED driver[3]	No
WMS-Z101-XX [1, 4]	Occupancy/vacancy Single-pole/multi-location	Auto-on/auto-off or manual-on/auto-off	8 A electronic fluorescent ballasts or LED driver[3]	Yes

1 XX in model number represents color/finish code.
2 For a bulk pack of 6 pieces, order MS-Z101-WH-6. Available in WH only.
3 Works with all ballasts and drivers that provide a current source compliant to IEC 60929 Annex E.2.
4 Available in Gloss colors only. For other BAA/TAA compliant products, please visit our website at www.lutron.com/BAA and select “download BAA product list”.

Job Name:	Model Numbers:	
Job Number:		

Specifications

Regulatory Approvals

- UL Listed to U.S. and Canadian safety requirements
- Title 20/24 certified lighting control device
  - Complies with Title 20 and Title 24 Section 110.9

Power

- Operating voltage: 120–277 V~ 50/60 Hz

Loads

- 8 A 0–10 V⎓ electronic fluorescent ballasts or LED drivers
- Works with all ballasts and drivers that provide a current source compliant to IEC 60929 Annex E.2, and whose inrush current does not exceed NEMA410 standards for electronic ballast/driver loads of 8 A steady state current.
- 50 mA max sink current
- Controls up to 25 ballasts or drivers (IEC 60929 Annex E.2 requires the ballast/driver to limit the current draw to 2.0 mA maximum)

Environment

- Ambient operating temperature:
  32 °F to 104 °F (0 °C to 40 °C), 0%–90% humidity, non-condensing; indoor use only

Warranty

- 5 Year Limited Warranty
  For additional Warranty information, please visit: www.lutron.com/TechnicalDocumentLibrary/Sensor_Warranty.pdf

Key Design Features

Dimmer

- On a single-tap, lights fade ON or OFF
- On a double-tap, lights go to full ON
- Light levels can be fine-tuned by pressing and holding the dimming rocker until the desired light level is reached
- High-end trim (adjust maximum light level that can be achieved, for energy savings)
- Low-end trim (adjust minimum light level that can be dimmed down, to prevent flickering lights)

Additional Information on Sensors

- For single-circuit PIR Maestro occupancy sensor switch models, refer to Lutron P/N 369666
- For Maestro occupancy sensor C•L dimmer models, refer to Lutron P/N 369748
- For dual-circuit PIR Maestro occupancy sensor switch, refer to Lutron P/N 369758
- For dual technology occupancy sensor switch models, refer to Lutron P/N 369773
- For more information, please see www.lutron.com/occvacsensors
- Lutron Customer Assistance: 1.844.LUTRON1

Select Design Feature Details

- Selectable dimming curve—linear or square law. Drivers exist with linear response and some exist with square law response. By providing a selectable dimming curve from the 0–10 V dimmer sensor, the user is able to choose his/her preferred response for optimized dimming performance.
- Miswire and incompatible load alert. The user will receive a visual alert when the product's 0–10 V⎓ control wires are incorrectly connected or an incompatible load is detected. In these conditions, the product will still function as a switch. Refer to Application Note 048536 for more details.
- Fade-to-On and Fade-to-Off.

Job Name:	Model Numbers:	
Job Number:		

Load Type and Capacity

Control	Vacancy Only	0–10 V⎓ Current[1,2]	Voltage/Load Type/Maximum Load (Anywhere in gang)[3]	Minimum Load	3-Way with Mechanical Switch	Multi-Location with Accessory Switch
MS-Z101-	—	50 mA max sink	120–277 V∼ Electronic fluorescent ballast or LED drivers, 8 A 120 V∼ Fan 4.4 A (1/6 HP)[4]	0 A	✓	✓
MS-Z101-V	✓	50 mA max sink		0 A	✓	✓
WMS-Z101-	—	50 mA max sink		0 A	✓	✓

1 The 0–10 V⎓ control wires are not to exceed 250 ft (76.2 m) in length, and must have a size of no less than 20 AWG (0.75 mm^2).
2 The 0–10 V⎓ wires must be installed as Class One per NEC® or local jurisdiction.
3 Dimmer sensor load type: Designed for use with permanently installed electronic fluorescent ballast or LED driver lighting loads. Do not install dimmers to control receptacles or motor-operated appliances.
4 When controlling light and fan loads simultaneously on a single circuit, maximum load capacity per circuit is 4.4 A at 120 V∼.

Notes:

- Ground or neutral is required for product to function.
- Connect green-sleeved wire to ground only in retrofit and replacement applications. When neutral connection is available, remove green sleeve and connect to neutral. If neither is present, consult a licensed electrician.
- When power is applied, the dimmer sensor can be manually turned on or off after the first 10 seconds and will automatically control the load after 2 minutes.
- Works with all ballasts and drivers that provide a current source compliant to IEC 60929 Annex E.2.

Job Name:	Model Numbers:	
Job Number:		

Custom Settings (default settings shown in **bold**)

Timeout

- 30 min
- **15 min**
- 5 min
- 1 min

Mode: Sensor Modes

Lights automatically turn off in all sensor modes

- **Occ: Occupancy mode (No ALD)**
- Lrn: Occupancy with learning ALD mode
- Fixd: Occupancy with fixed ALD mode
- Vac: Vacancy mode (No ALD)

PIR: Passive Infrared Sensitivity

- **Hi**
- Med
- Low
- Min

Additional Settings

Fixed ALD Light Level

- Hi
- Med
- **Low***
- Min

* *Low* is the default setting for any sensor that is set by the user to "Occupancy with fixed ALD mode"

Manual Off-While-Occupied

- **Enabled**
- Disabled

Walk-Thru Mode

- Enabled
- **Disabled**

Occupied Level

A programmable setting that determines the light level the dimmer sensor will turn on to, once occupancy has been detected

- **100%**
- 50%
- Preset Level
  - When the Occupied Level is set to *Preset Level*, the dimmer sensor will automatically and manually turn on to the selected Preset Level.

Fade On Rate

- 15 sec
- 5 sec
- **2.5 sec**
- 0.75 sec

Fade Off Rate

- 15 sec
- 5 sec
- **2.5 sec**
- 0.75 sec

Preset Level**

- Locked (High range)
- Locked (Med range)
- Locked (Low range)
- Locked (Min range)
- **Unlocked**
  - When the Preset Level is set to a *locked* level, the dimmer sensor will turn ON to the predetermined "locked" level with a single tap of the Tap button.
  - When the Preset Level is set to *unlocked*, a single tap of the Tap button will turn the dimmer sensor ON to the light level to which it was adjusted the last time the light was on.

Low-End Trim**

- High range
- Med range
- Low range
- Min range

High-End Trim**

- High range
- Med range
- Low range
- Min range

** Setting is fully variable within each range.

Job Name:	Model Numbers:	
Job Number:		

Custom Settings: Details (default settings shown in **bold**)

Ambient Light Detection (ALD) mode

Lights turn on only when natural light in the room is below the set threshold.

- Enabled
  - Learning: The ambient light threshold adjusts to the user's preference via manual interaction with the dimmer sensor.
  - Fixed: Choose a fixed ALD light level from 4 pre-set options: High, Medium, Low, Minimum.
- **Disabled**

Manual Off-While-Occupied Options

- **Enabled**
  - When the dimmer sensor is manually turned off, the sensor switch will not turn the lights back on automatically while the room is occupied.
  - Once the room is vacated, the auto-on feature returns to normal operation after the timeout period has expired.
  - This may be the preference in conference rooms or classrooms while viewing presentations. This feature requires motions to keep the lights off.
- Disabled
  - When the dimmer sensor is manually turned off, the auto-on feature will return to normal operation after 25 seconds.
  - This may be the preference in a restroom if the user always wants the lights to turn on upon entering and the lights to turn off when the room is vacant.

Walk-Thru Mode

- Enabled*
  - If motion is not detected within 3 minutes after initial occupancy, the lights will turn off after 3 minutes, instead of the current timeout.
  - This setting may be the preference in commercial applications where personnel may briefly trigger sensors during non-working hours.
- **Disabled**
  - When motion is detected, the lights will ALWAYS remain on for the entire timeout duration regardless of the duration of occupancy detection.

* 1 minute timeout would be overridden if walk-thru mode is also *Enabled*

Fade-On Rate

The time required for the lights to reach the preset light level when the tap button is pressed.

Fade-Off Rate

The time required for the lights to turn off (from the ON state) when the tap button is pressed.

Low-End Trim

Lowest achievable light level to which the dimmer sensor can be adjusted.

High-End trim

Highest achievable light level to which the dimmer sensor can be adjusted.

Job Name:	Model Numbers:	
Job Number:		

369833j 6 04.08.24

Maestro 0–10 V Dimmer Sensor Placement and Operation

- The ability of the dimmer sensor to detect motion requires line-of-sight of room occupants. The dimmer sensor must have an unobstructed view of the room.
- Hot objects and moving air currents can affect the performance of the dimmer sensor. For best performance, the dimmer sensor should be mounted at least 4 ft (1.2 m) away from HVAC vents and light bulbs.
- The performance of the dimmer sensor depends on a temperature differential between the ambient room temperature and that of room occupants. Warmer rooms may reduce the ability of the dimmer sensor to detect occupants.

NEMA WD7 Test Grid Coverage

(High Sensitivity Setting)

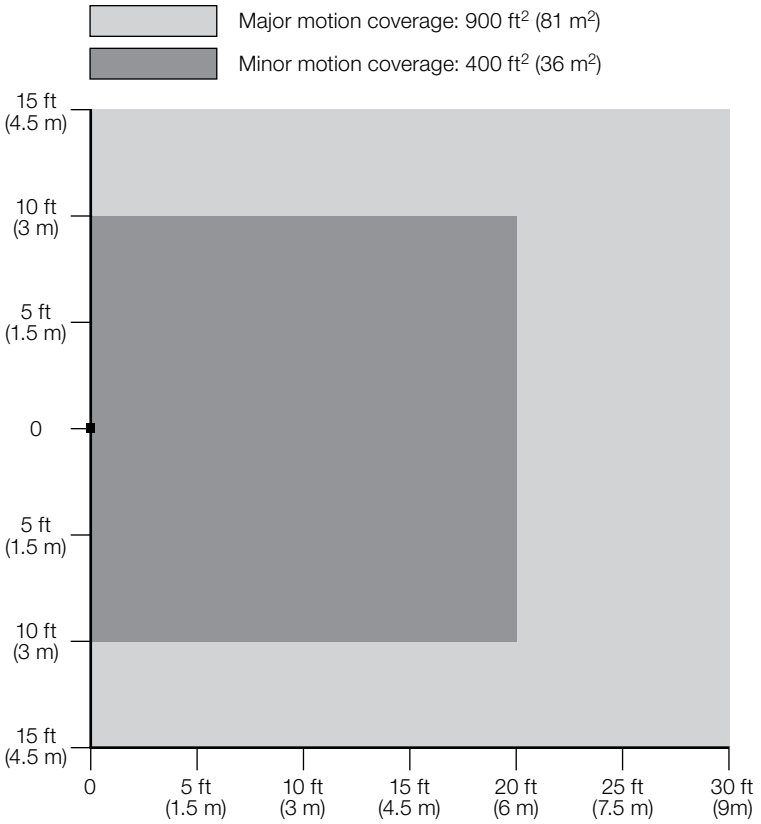

Horizontal Beam Diagram

(For Reference Only)

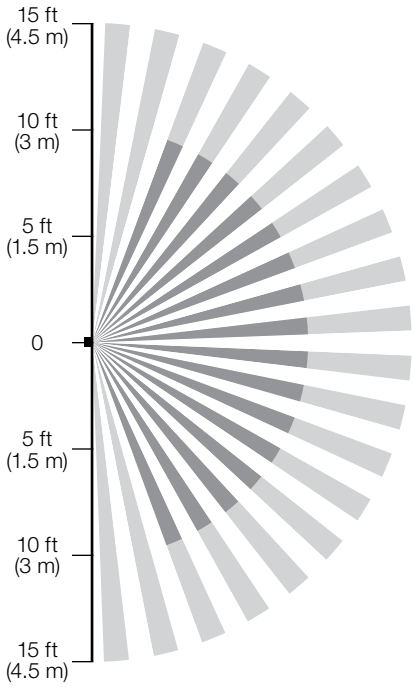

Vertical Beam Diagram

(For Reference Only)

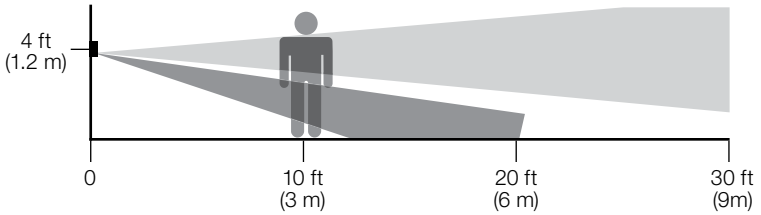

Job Name:	Model Numbers:	
Job Number:		

369833j 7 04.08.24

Dimensions

Measurements shown as: in (mm)

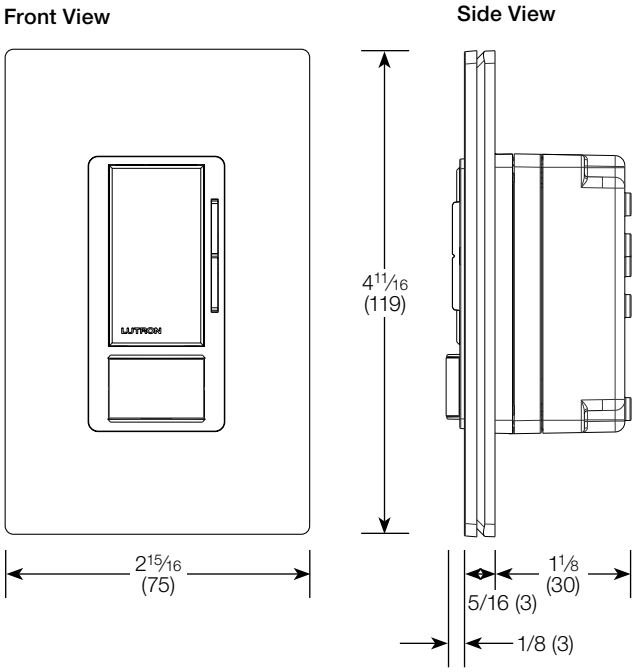

Operation

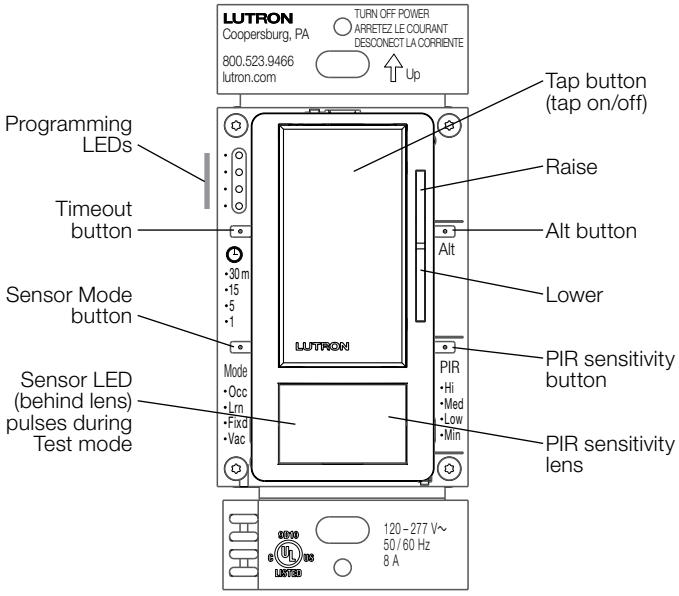

Mounting

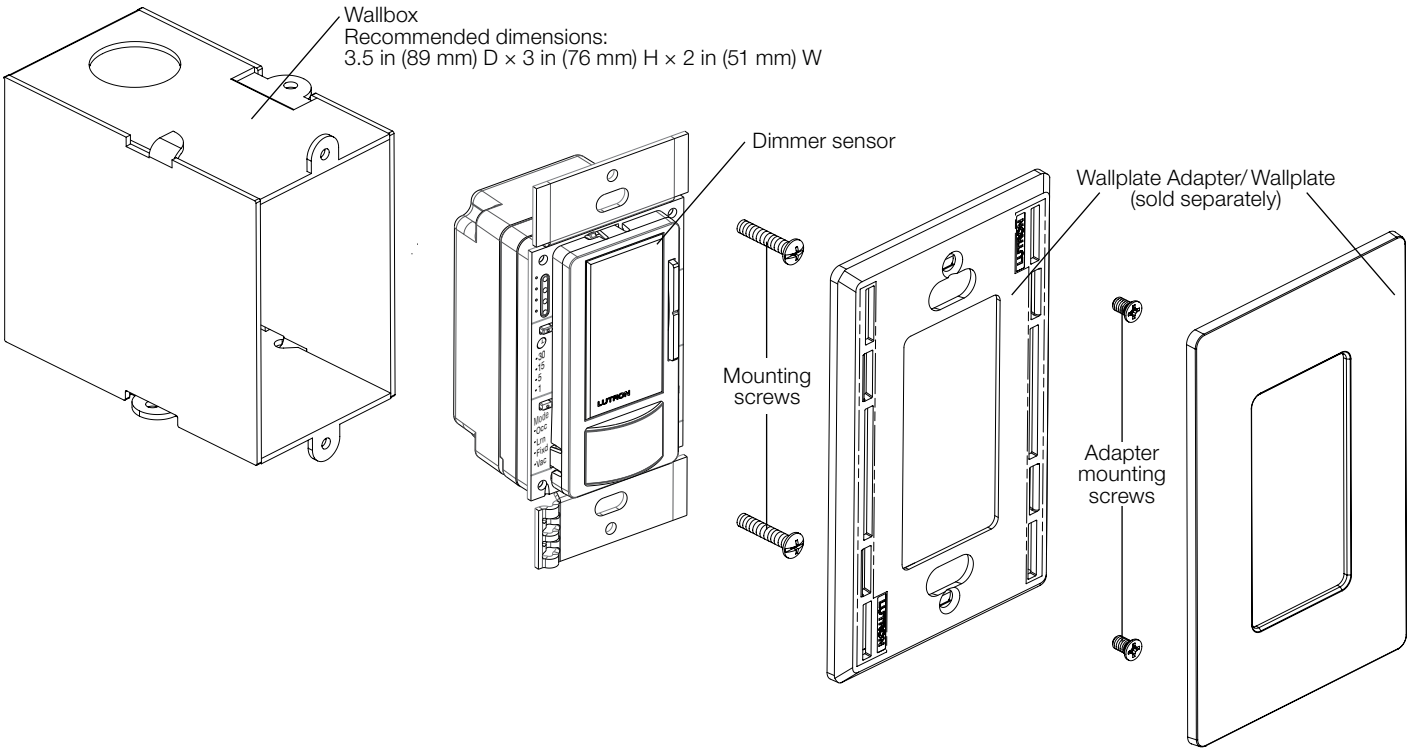

Job Name:	Model Numbers:	
Job Number:		

369833j 8 04.08.24

Wiring Installations with the Maestro 0–10 V Dimmer Sensor

In order to function, the 0–10 V dimmer sensor must have the green-sleeved wire connected to ground, or the white wire connected to neutral.

Before installing wallplate, program all desired settings.

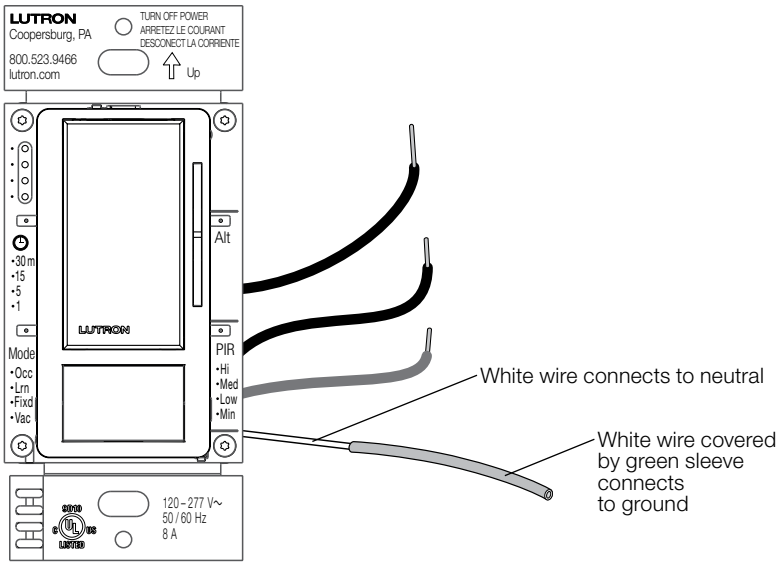

Wiring: Single-Pole Installation

With Neutral

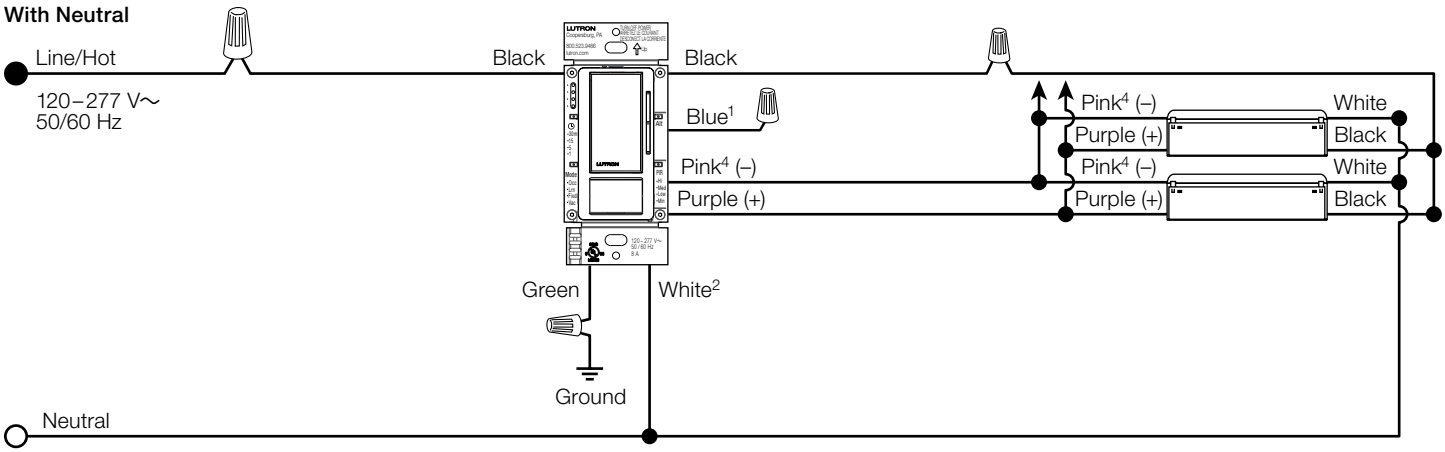

Without Neutral

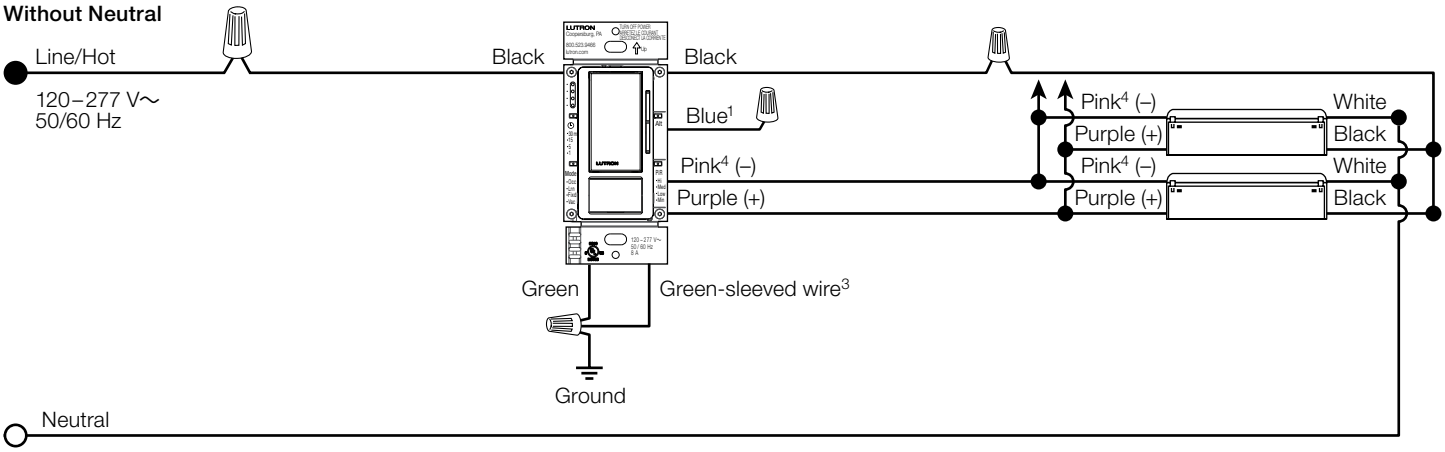

1 When using controls in single location installations, cap the blue wire. Do not connect the blue wire to any other wiring or to ground.
2 When neutral is present in wallbox, remove green sleeve from the white wire and connect the white wire to neutral.
3 If no neutral is present, connect green-sleeved wire to ground.
4 This wire/terminal may be gray on older products or in retrofit applications.

Job Name:	Model Numbers:	
Job Number:		

Wiring: 3-Way Installation* with Standard Mechanical Switch**

With Neutral

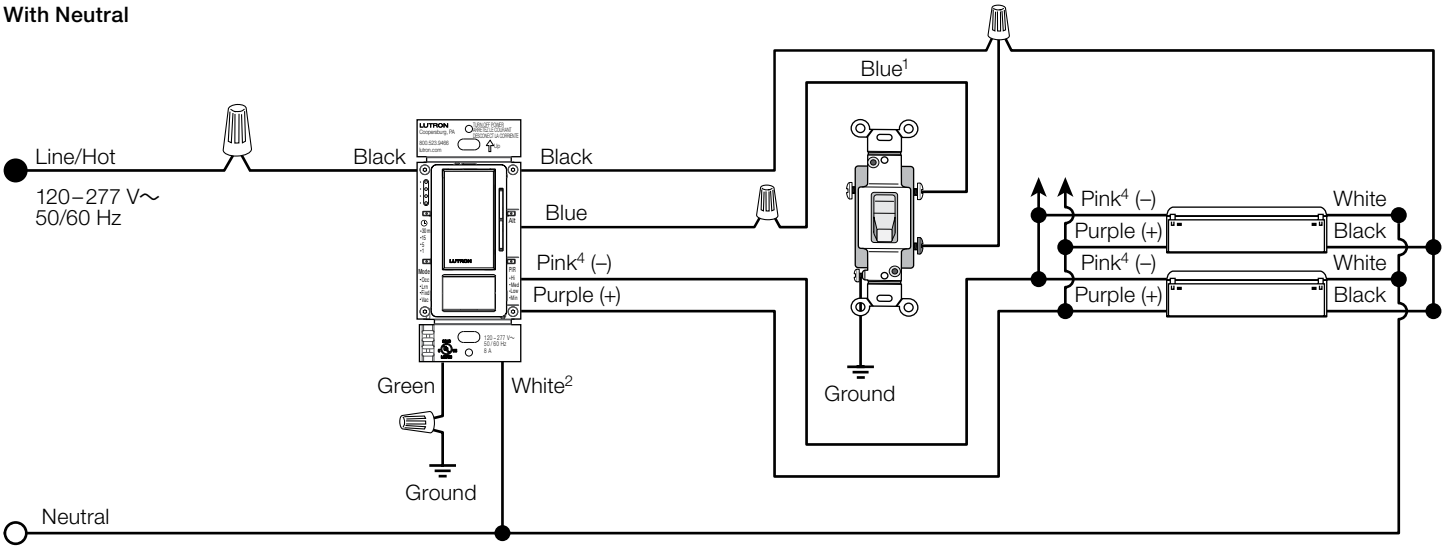

Without Neutral

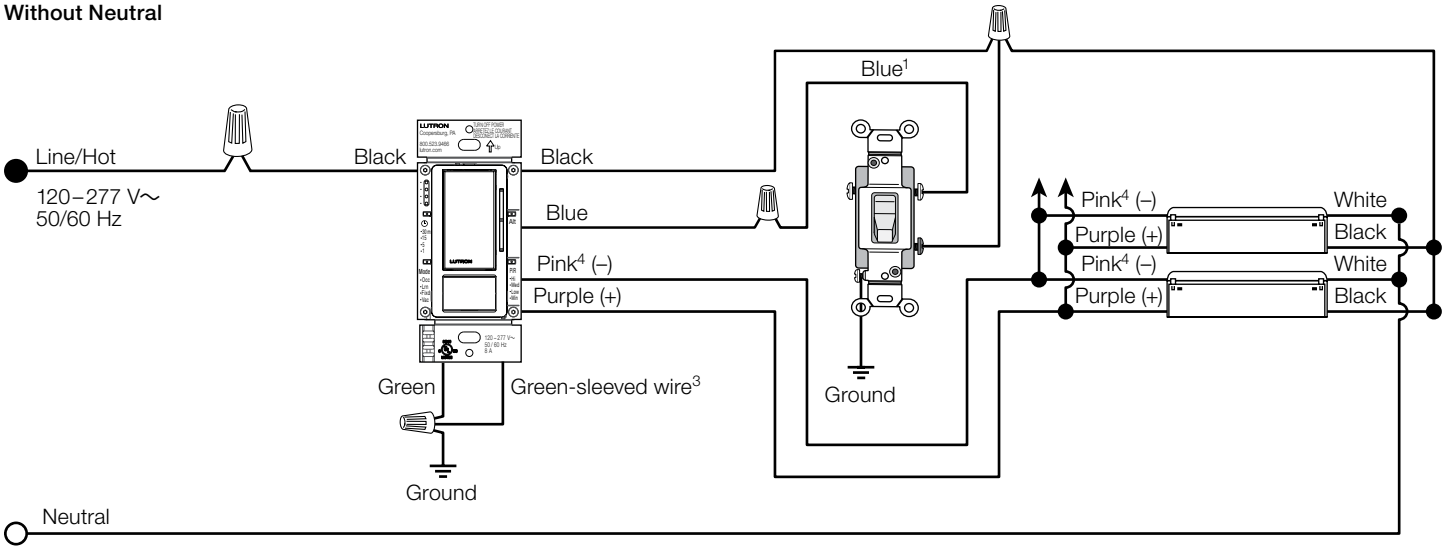

* One dimmer sensor can be installed in any location.

** **Important:** Some rewiring of 3-way mechanical switch is required. See page 10 for instructions.

1 The length of the blue wire (3-way wire) must not exceed 150 ft (45.72 m).

2 When neutral is present in wallbox, remove green sleeve from the white wire and connect the white wire to neutral.

3 If no neutral is present, connect green-sleeved wire to ground.

4 This wire/terminal may be gray on older products or in retrofit applications.

Job Name:	Model Numbers:	
Job Number:		

369833j 10 04.08.24

3-Way Retrofit Installation

For retrofit 3-way installations, the mechanical switch needs to be rewired as shown in the diagram below after wiring the dimmer sensor. Otherwise, the 3-way installation will not work as expected. Single-pole mechanical switches may also be used in a 3-way installation with MS-Z101, MS-Z101-V and WMS-Z101 models.

1. Connect Ground: Ensure that the bare copper or green ground wire from the wallbox is connected to the green ground screw of the mechanical switch.
2. Tag circuit Common: Your 3-way mechanical switch should have three screw terminals, two of the same color, and one of a different color. Tag the wire that is connected to the screw terminal of a different color.
3. Identify the wire that matches the color of the wire you connected to the blue wire of the Maestro dimmer sensor. Connect this wire to one of the two terminals of the same color.
4. Combine the tagged wire, the remaining wire, and the yellow jumper wire (included) using a wire connector. Connect the other end of jumper wire to the different color screw.

Note: If the 0–10 V dimmer sensor is first installed with a traditional 3-way mechanical switch and the mechanical switch is later replaced with a Maestro accessory switch, the 0–10 V dimmer sensor will need to be returned to factory default settings in order to function correctly.

Traditional 3-Way Mechanical Switch Wiring

Rewired to →

3-Way Mechanical Switch Wiring with Dimmer Sensor

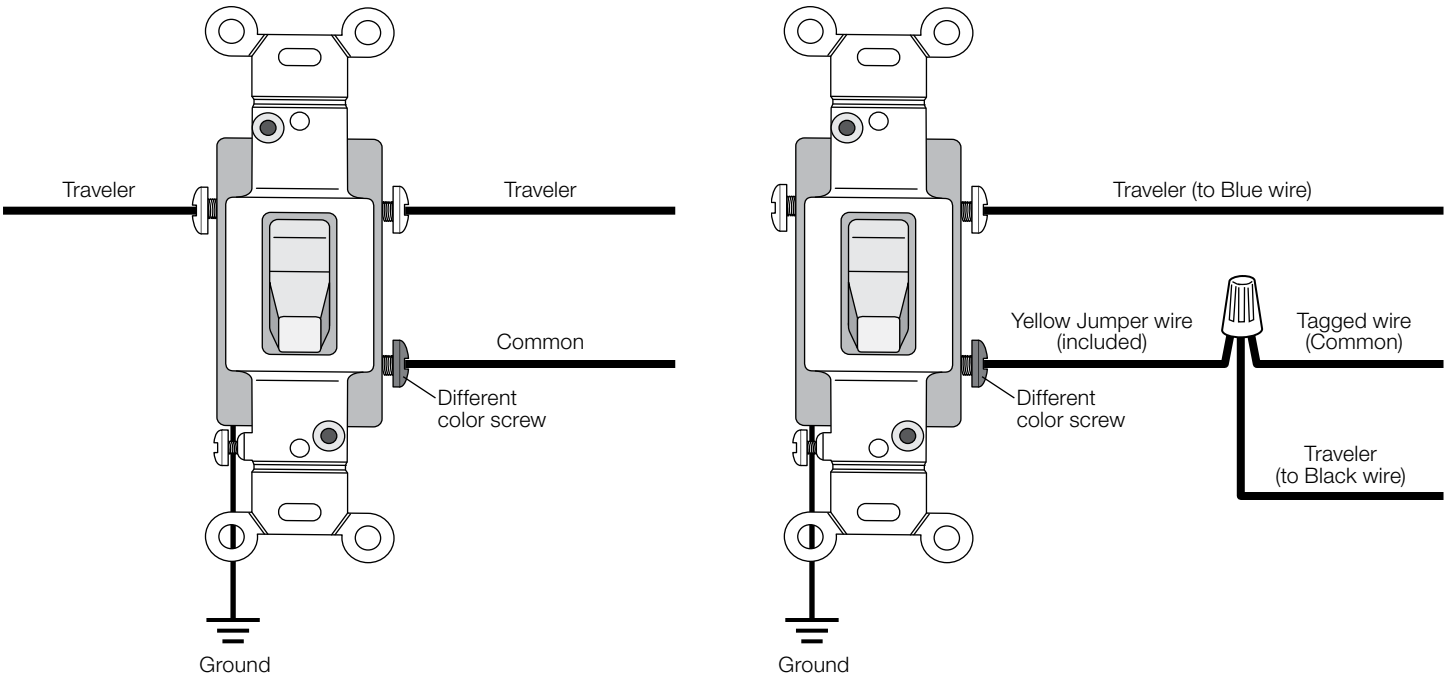

Job Name:	Model Numbers:	
Job Number:		

Wiring: 120 V∼ Multi-Location Installation* with Maestro Accessory Switches

Note: If the 0–10 V dimmer sensor is first installed with a traditional 3-way mechanical switch and the mechanical switch is later replaced with a Maestro accessory switch, the 0–10 V dimmer sensor will need to be returned to factory default settings in order to function correctly.

With Neutral

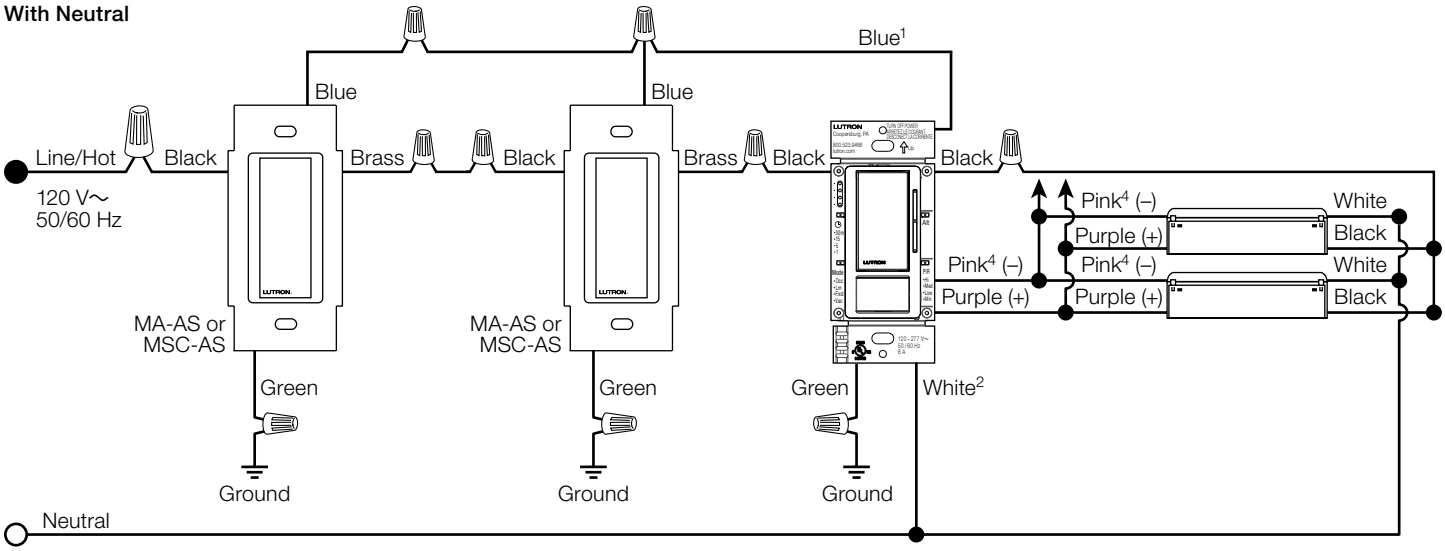

Without Neutral

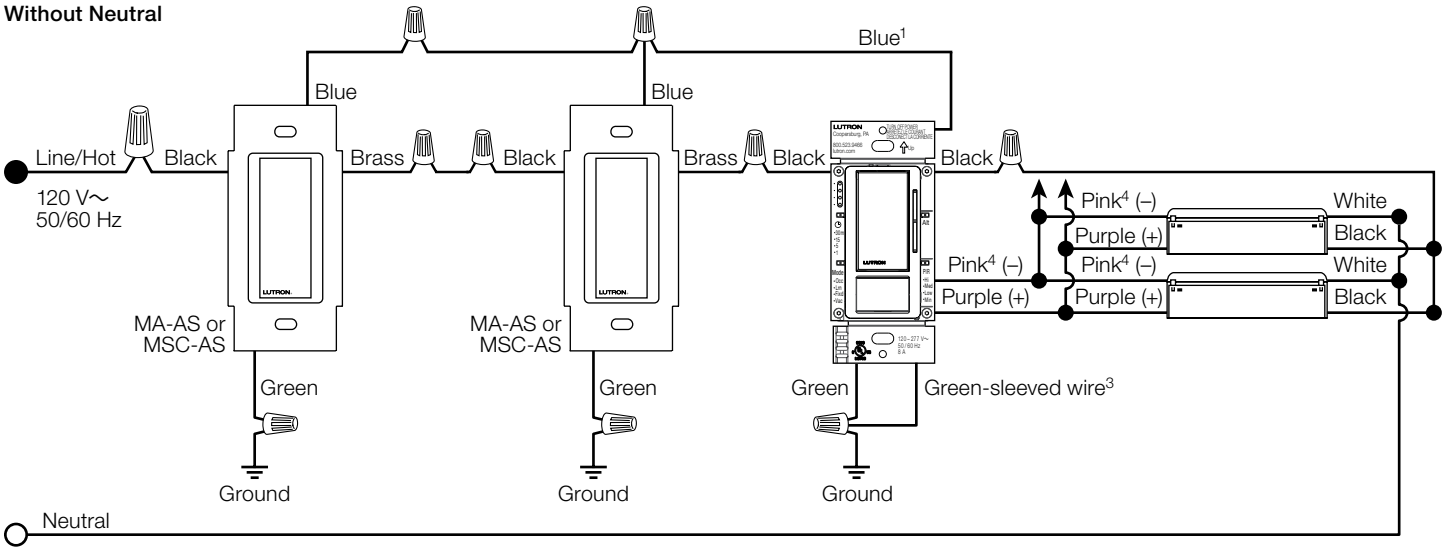

* One dimmer sensor can be installed in any location.

1 The length of the blue wire (3-way wire) must not exceed 150 ft (45.72 m).

2 When neutral is present in wallbox, remove green sleeve from the white wire and connect the white wire to neutral.

3 If no neutral is present, connect green-sleeved wire to ground.

4 This wire/terminal may be gray on older products or in retrofit applications.

Job Name:	Model Numbers:	
Job Number:		

Wiring: 220–277 V∼ Multi-Location Installation with Maestro Accessory Switches

Note: If the 0–10 V dimmer sensor is first installed with a traditional 3-way mechanical switch and the mechanical switch is later replaced with a Maestro accessory switch, the 0–10 V dimmer sensor will need to be returned to factory default settings in order to function correctly.

With Neutral

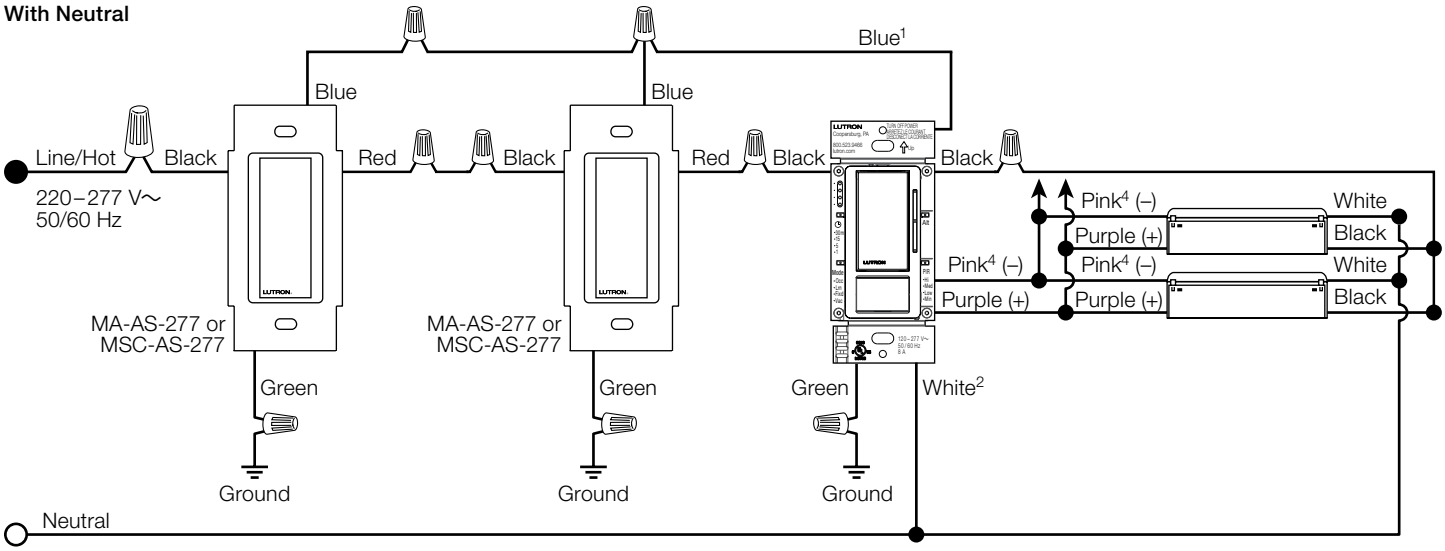

Without Neutral

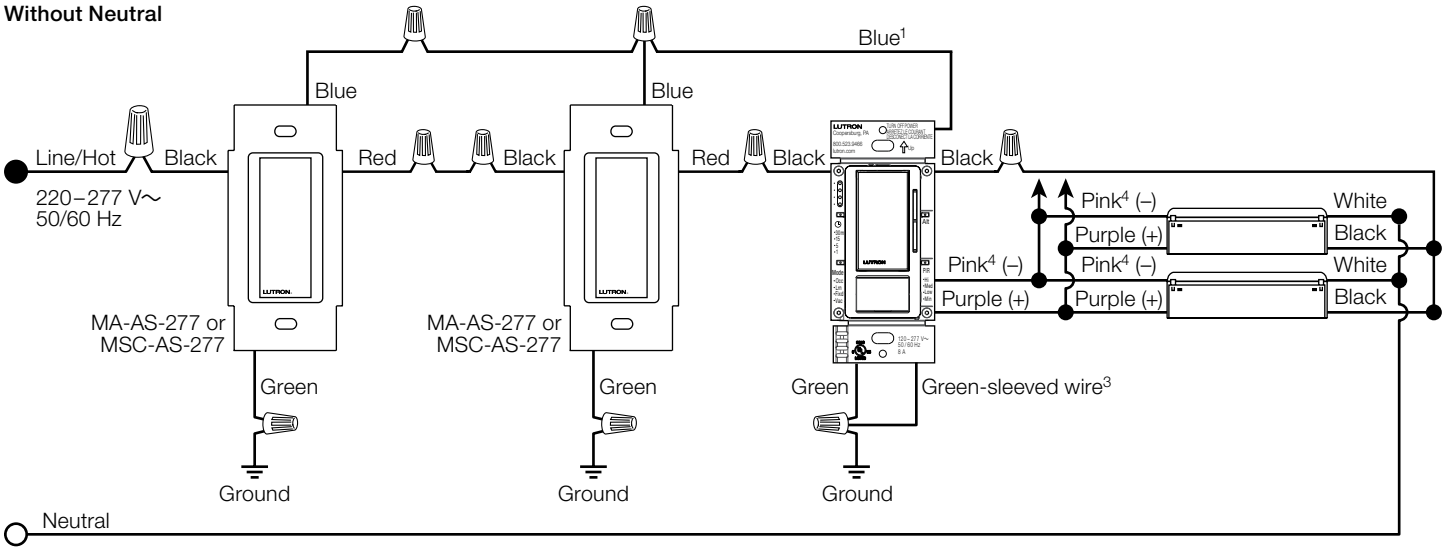

* One dimmer sensor can be installed in any location.

1 The length of the blue wire (3-way wire) must not exceed 150 ft (45.72 m).

2 When neutral is present in wallbox, remove green sleeve from the white wire and connect the white wire to neutral.

3 If no neutral is present, connect green-sleeved wire to ground.

4 This wire/terminal may be gray on older products or in retrofit applications.

Job Name:	Model Numbers:	
Job Number:		

Colors and Finishes

Gloss Finishes

White
WH

Ivory
IV

Almond
AL

Light Almond
LA

Gray
GR

Brown
BR

Black
BL

Satin Finishes

Snow
SW

Midnight
MN

Taupe
TP

Biscuit
BI

Palladium
PD

Hot
HT

For the latest color offerings please see our website:
http://www.lutron.com/satincolors

- Due to printing limitations, colors and finishes shown cannot be guaranteed to perfectly match actual product colors.
- Color chip keychains are available for more precise color matching:
  - Gloss Finishes: DG-CK-1
  - Satin Finishes: SF-CK-1

Lutron, the Lutron logo, Maestro, C•L, and XCT are trademarks or registered trademarks of Lutron Electronics Co., Inc. in the US and/or other countries. All other product names, logos, and brands are property of their respective owners.

Job Name:	Model Numbers:	
Job Number:		

369833j 1 04.08.24

Maestro 0–10 V Dimmer Sensor

Lutron Maestro 0–10 V dimmer sensors are lighting controls with passive infrared sensors that automatically control the lights in an area. These sensors detect heat from occupants moving within an area to determine when the space is occupied. The Maestro 0–10 V dimmer sensor combines a Maestro 0–10 V dimmer with an occupancy or vacancy sensor.

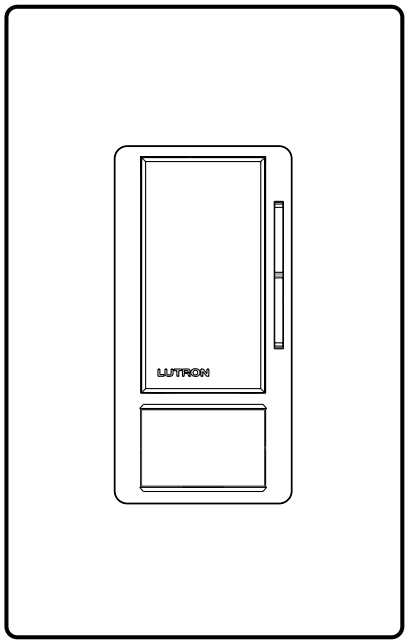

Features

- Controls 0–10 V⎓ electronic fluorescent ballasts or LED driver load types*
- Passive infrared motion detection with exclusive Lutron XCT Technology for fine motion detection
- 180° sensor field-of-view
- Up to 30 ft × 30 ft (9 m × 9 m) [900 ft^2 (81 m^2)] major motion coverage and 20 ft × 20 ft (6 m × 6 m) [400 ft^2 (36 m^2)] minor motion coverage
- Occupancy version can be set to auto-on/auto-off or manual-on/auto-off
- Vacancy version available to meet CA Title 24 requirements
- Adjustable timeout (1, 5, 15, or 30 minutes)
- Adjustable settings for auto-on light level (occupied level): 100%, 50%, last light level, or locked preset light level
- Adjustable sensitivity level: High, Med, Low, Min
- Off warning fades lights to off over a period of 10 seconds
- Advanced Maestro dimmer features available (locked preset, fade-to-on, and fade-to-off, etc.)
- Adaptive switching algorithm for extended relay life
- Smart ambient light detection (ALD)
- All models have single pole and 3-way capability
- Works with a single standard mechanical 3-way switch or up to 9 companion switches (MA-AS or MSC-AS)*
- High-end trim and low-end trim to adjust maximum and minimum light levels
- Selectable dimming curve—linear or square law
- Miswire and incompatible load alert

* When using with standard mechanical 3-way switch, some rewiring is required. Not compatible with MA-R.

Models Available

Model Number	Description	Sensor Operation	Maximum Capacity	TAA Compliant
MS-Z101-XX[1, 2]	Occupancy/vacancy Single-pole/multi-location	Auto-on/auto-off or manual-on/auto-off	8 A electronic fluorescent ballasts or LED driver[3]	No
MS-Z101-V-XX[1]	Vacancy Single-pole/ multi-location	Manual-on/auto-off ONLY	8 A electronic fluorescent ballasts or LED driver[3]	No
WMS-Z101-XX [1, 4]	Occupancy/vacancy Single-pole/multi-location	Auto-on/auto-off or manual-on/auto-off	8 A electronic fluorescent ballasts or LED driver[3]	Yes

1 XX in model number represents color/finish code.
2 For a bulk pack of 6 pieces, order MS-Z101-WH-6. Available in WH only.
3 Works with all ballasts and drivers that provide a current source compliant to IEC 60929 Annex E.2.
4 Available in Gloss colors only. For other BAA/TAA compliant products, please visit our website at www.lutron.com/BAA and select “download BAA product list”.

Job Name:	Model Numbers:	
Job Number:		

Specifications

Regulatory Approvals

- UL Listed to U.S. and Canadian safety requirements
- Title 20/24 certified lighting control device
  - Complies with Title 20 and Title 24 Section 110.9

Power

- Operating voltage: 120–277 V~ 50/60 Hz

Loads

- 8 A 0–10 V⎓ electronic fluorescent ballasts or LED drivers
- Works with all ballasts and drivers that provide a current source compliant to IEC 60929 Annex E.2, and whose inrush current does not exceed NEMA410 standards for electronic ballast/driver loads of 8 A steady state current.
- 50 mA max sink current
- Controls up to 25 ballasts or drivers (IEC 60929 Annex E.2 requires the ballast/driver to limit the current draw to 2.0 mA maximum)

Environment

- Ambient operating temperature:
  32 °F to 104 °F (0 °C to 40 °C), 0%–90% humidity, non-condensing; indoor use only

Warranty

- 5 Year Limited Warranty
  For additional Warranty information, please visit: www.lutron.com/TechnicalDocumentLibrary/Sensor_Warranty.pdf

Key Design Features

Dimmer

- On a single-tap, lights fade ON or OFF
- On a double-tap, lights go to full ON
- Light levels can be fine-tuned by pressing and holding the dimming rocker until the desired light level is reached
- High-end trim (adjust maximum light level that can be achieved, for energy savings)
- Low-end trim (adjust minimum light level that can be dimmed down, to prevent flickering lights)

Additional Information on Sensors

- For single-circuit PIR Maestro occupancy sensor switch models, refer to Lutron P/N 369666
- For Maestro occupancy sensor C•L dimmer models, refer to Lutron P/N 369748
- For dual-circuit PIR Maestro occupancy sensor switch, refer to Lutron P/N 369758
- For dual technology occupancy sensor switch models, refer to Lutron P/N 369773
- For more information, please see www.lutron.com/occvacsensors
- Lutron Customer Assistance: 1.844.LUTRON1

Select Design Feature Details

- Selectable dimming curve—linear or square law. Drivers exist with linear response and some exist with square law response. By providing a selectable dimming curve from the 0–10 V dimmer sensor, the user is able to choose his/her preferred response for optimized dimming performance.
- Miswire and incompatible load alert. The user will receive a visual alert when the product's 0–10 V⎓ control wires are incorrectly connected or an incompatible load is detected. In these conditions, the product will still function as a switch. Refer to Application Note 048536 for more details.
- Fade-to-On and Fade-to-Off.

Job Name:	Model Numbers:	
Job Number:		

Load Type and Capacity

Control	Vacancy Only	0–10 V⎓ Current[1,2]	Voltage/Load Type/Maximum Load (Anywhere in gang)[3]	Minimum Load	3-Way with Mechanical Switch	Multi-Location with Accessory Switch
MS-Z101-	—	50 mA max sink	120–277 V∼ Electronic fluorescent ballast or LED drivers, 8 A 120 V∼ Fan 4.4 A (1/6 HP)[4]	0 A	✓	✓
MS-Z101-V	✓	50 mA max sink		0 A	✓	✓
WMS-Z101-	—	50 mA max sink		0 A	✓	✓

1 The 0–10 V⎓ control wires are not to exceed 250 ft (76.2 m) in length, and must have a size of no less than 20 AWG (0.75 mm^2).
2 The 0–10 V⎓ wires must be installed as Class One per NEC® or local jurisdiction.
3 Dimmer sensor load type: Designed for use with permanently installed electronic fluorescent ballast or LED driver lighting loads. Do not install dimmers to control receptacles or motor-operated appliances.
4 When controlling light and fan loads simultaneously on a single circuit, maximum load capacity per circuit is 4.4 A at 120 V∼.

Notes:

- Ground or neutral is required for product to function.
- Connect green-sleeved wire to ground only in retrofit and replacement applications. When neutral connection is available, remove green sleeve and connect to neutral. If neither is present, consult a licensed electrician.
- When power is applied, the dimmer sensor can be manually turned on or off after the first 10 seconds and will automatically control the load after 2 minutes.
- Works with all ballasts and drivers that provide a current source compliant to IEC 60929 Annex E.2.

Job Name:	Model Numbers:	
Job Number:		

Custom Settings (default settings shown in **bold**)

Timeout

- 30 min
- **15 min**
- 5 min
- 1 min

Mode: Sensor Modes

Lights automatically turn off in all sensor modes

- **Occ: Occupancy mode (No ALD)**
- Lrn: Occupancy with learning ALD mode
- Fixd: Occupancy with fixed ALD mode
- Vac: Vacancy mode (No ALD)

PIR: Passive Infrared Sensitivity

- **Hi**
- Med
- Low
- Min

Additional Settings

Fixed ALD Light Level

- Hi
- Med
- **Low***
- Min

* *Low* is the default setting for any sensor that is set by the user to "Occupancy with fixed ALD mode"

Manual Off-While-Occupied

- **Enabled**
- Disabled

Walk-Thru Mode

- Enabled
- **Disabled**

Occupied Level

A programmable setting that determines the light level the dimmer sensor will turn on to, once occupancy has been detected

- **100%**
- 50%
- Preset Level
  - When the Occupied Level is set to *Preset Level*, the dimmer sensor will automatically and manually turn on to the selected Preset Level.

Fade On Rate

- 15 sec
- 5 sec
- **2.5 sec**
- 0.75 sec

Fade Off Rate

- 15 sec
- 5 sec
- **2.5 sec**
- 0.75 sec

Preset Level**

- Locked (High range)
- Locked (Med range)
- Locked (Low range)
- Locked (Min range)
- **Unlocked**
  - When the Preset Level is set to a *locked* level, the dimmer sensor will turn ON to the predetermined "locked" level with a single tap of the Tap button.
  - When the Preset Level is set to *unlocked*, a single tap of the Tap button will turn the dimmer sensor ON to the light level to which it was adjusted the last time the light was on.

Low-End Trim**

- High range
- Med range
- Low range
- Min range

High-End Trim**

- High range
- Med range
- Low range
- Min range

** Setting is fully variable within each range.

Job Name:	Model Numbers:	
Job Number:		

Custom Settings: Details (default settings shown in **bold**)

Ambient Light Detection (ALD) mode

Lights turn on only when natural light in the room is below the set threshold.

- Enabled
  - Learning: The ambient light threshold adjusts to the user's preference via manual interaction with the dimmer sensor.
  - Fixed: Choose a fixed ALD light level from 4 pre-set options: High, Medium, Low, Minimum.
- **Disabled**

Manual Off-While-Occupied Options

- **Enabled**
  - When the dimmer sensor is manually turned off, the sensor switch will not turn the lights back on automatically while the room is occupied.
  - Once the room is vacated, the auto-on feature returns to normal operation after the timeout period has expired.
  - This may be the preference in conference rooms or classrooms while viewing presentations. This feature requires motions to keep the lights off.
- Disabled
  - When the dimmer sensor is manually turned off, the auto-on feature will return to normal operation after 25 seconds.
  - This may be the preference in a restroom if the user always wants the lights to turn on upon entering and the lights to turn off when the room is vacant.

Walk-Thru Mode

- Enabled*
  - If motion is not detected within 3 minutes after initial occupancy, the lights will turn off after 3 minutes, instead of the current timeout.
  - This setting may be the preference in commercial applications where personnel may briefly trigger sensors during non-working hours.
- **Disabled**
  - When motion is detected, the lights will ALWAYS remain on for the entire timeout duration regardless of the duration of occupancy detection.

* 1 minute timeout would be overridden if walk-thru mode is also *Enabled*

Fade-On Rate

The time required for the lights to reach the preset light level when the tap button is pressed.

Fade-Off Rate

The time required for the lights to turn off (from the ON state) when the tap button is pressed.

Low-End Trim

Lowest achievable light level to which the dimmer sensor can be adjusted.

High-End trim

Highest achievable light level to which the dimmer sensor can be adjusted.

Job Name:	Model Numbers:	
Job Number:		

369833j 6 04.08.24

Maestro 0–10 V Dimmer Sensor Placement and Operation

- The ability of the dimmer sensor to detect motion requires line-of-sight of room occupants. The dimmer sensor must have an unobstructed view of the room.
- Hot objects and moving air currents can affect the performance of the dimmer sensor. For best performance, the dimmer sensor should be mounted at least 4 ft (1.2 m) away from HVAC vents and light bulbs.
- The performance of the dimmer sensor depends on a temperature differential between the ambient room temperature and that of room occupants. Warmer rooms may reduce the ability of the dimmer sensor to detect occupants.

NEMA WD7 Test Grid Coverage

(High Sensitivity Setting)

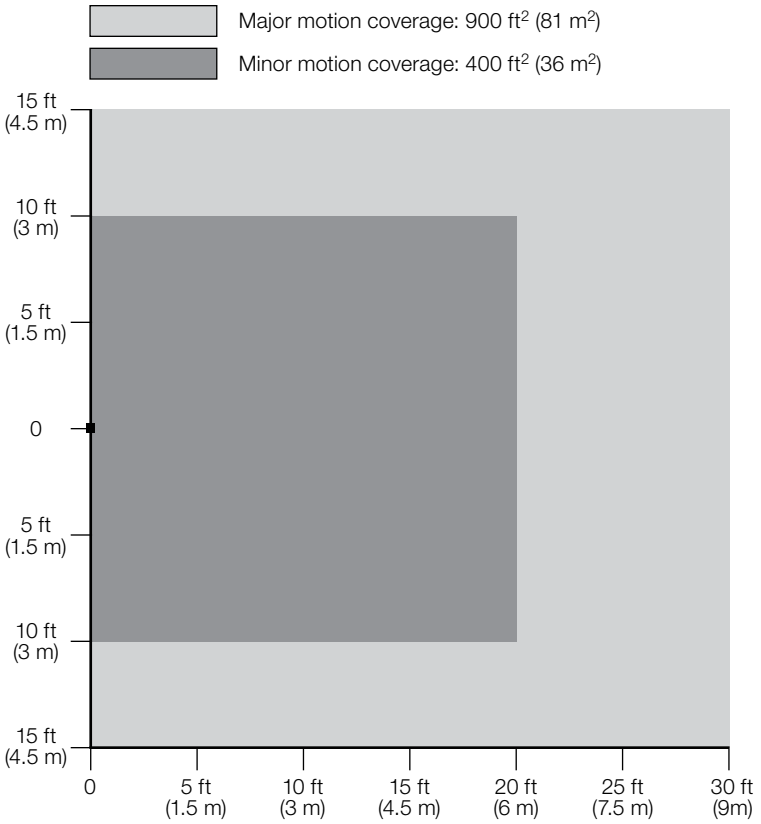

Horizontal Beam Diagram

(For Reference Only)

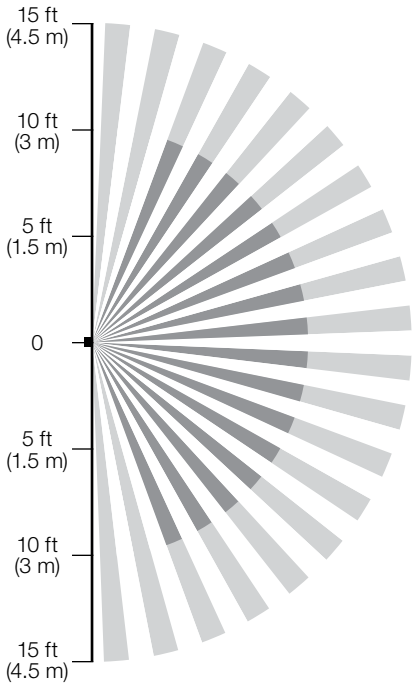

Vertical Beam Diagram

(For Reference Only)

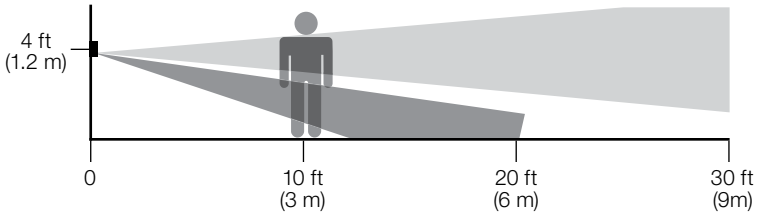

Job Name:	Model Numbers:	
Job Number:		

369833j 7 04.08.24

Dimensions

Measurements shown as: in (mm)

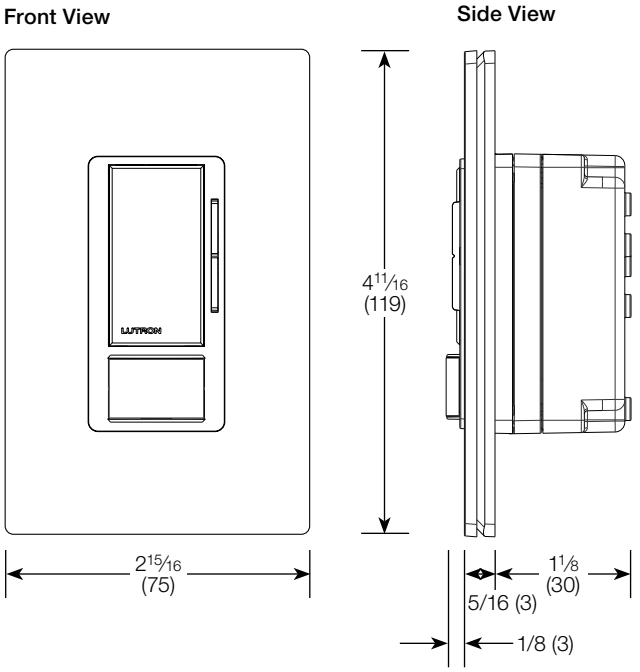

Operation

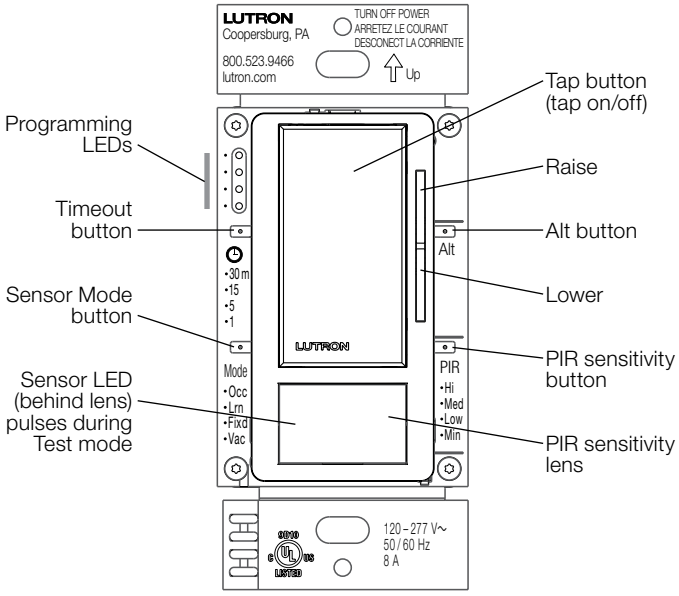

Mounting

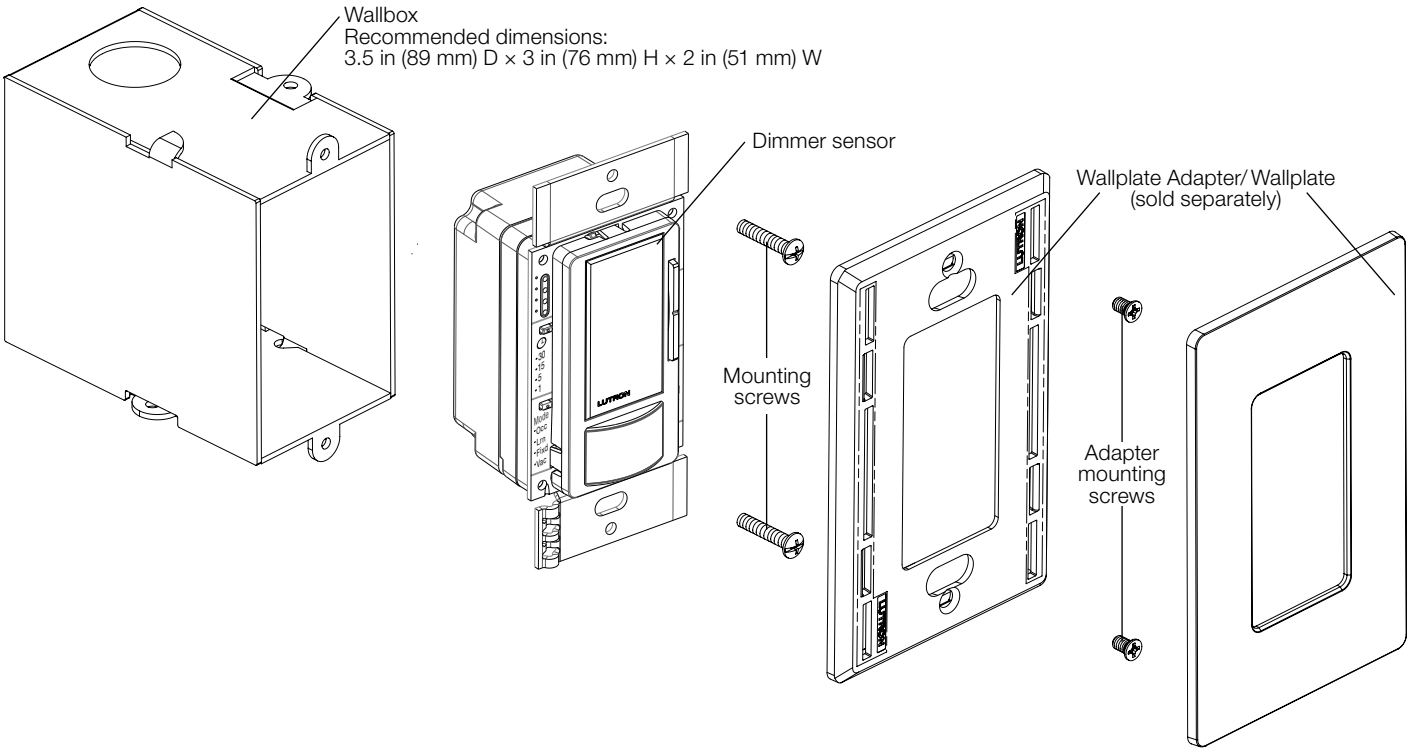

Job Name:	Model Numbers:	
Job Number:		

369833j 8 04.08.24

Wiring Installations with the Maestro 0–10 V Dimmer Sensor

In order to function, the 0–10 V dimmer sensor must have the green-sleeved wire connected to ground, or the white wire connected to neutral.

Before installing wallplate, program all desired settings.

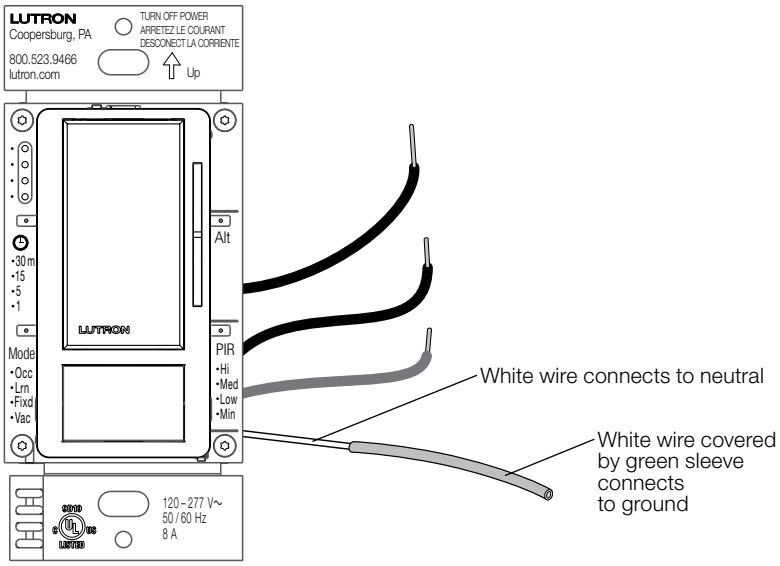

Wiring: Single-Pole Installation

With Neutral

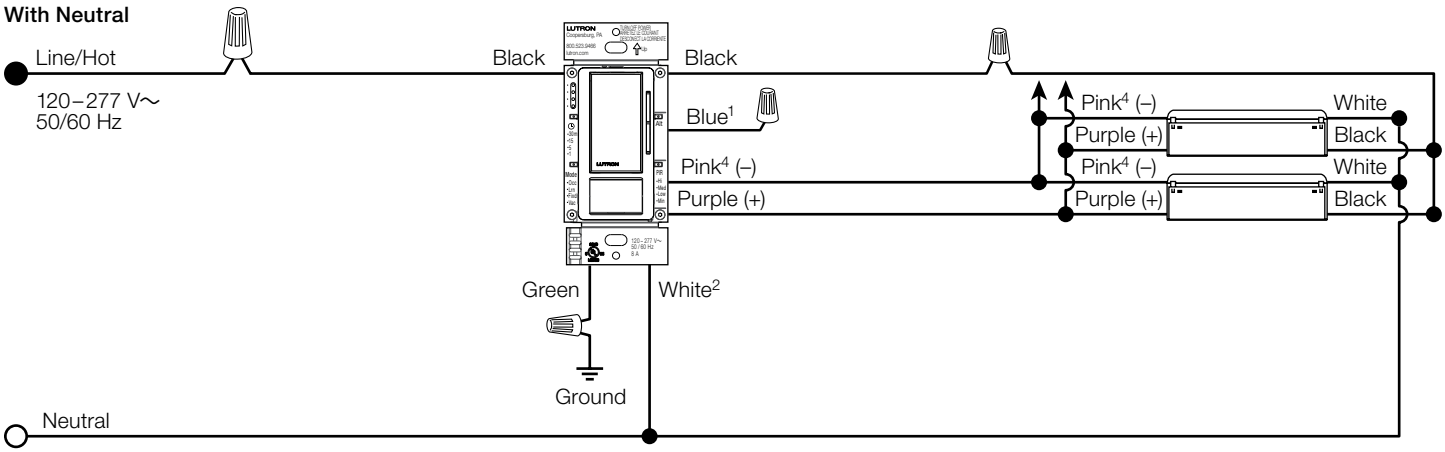

Without Neutral

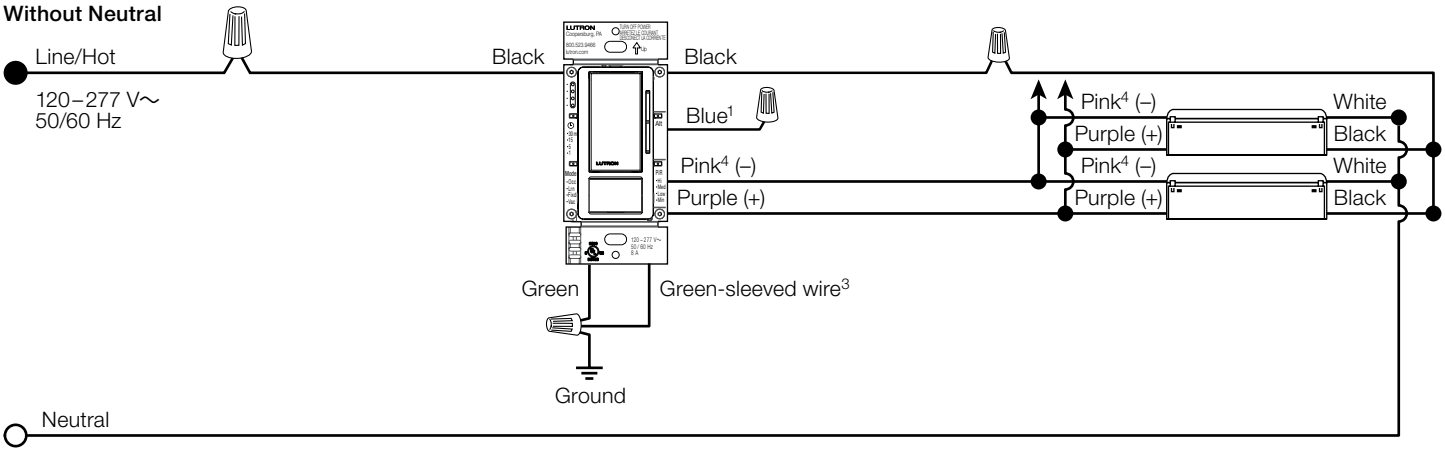

1 When using controls in single location installations, cap the blue wire. Do not connect the blue wire to any other wiring or to ground.
2 When neutral is present in wallbox, remove green sleeve from the white wire and connect the white wire to neutral.
3 If no neutral is present, connect green-sleeved wire to ground.
4 This wire/terminal may be gray on older products or in retrofit applications.

Job Name:	Model Numbers:	
Job Number:		

Wiring: 3-Way Installation* with Standard Mechanical Switch**

With Neutral

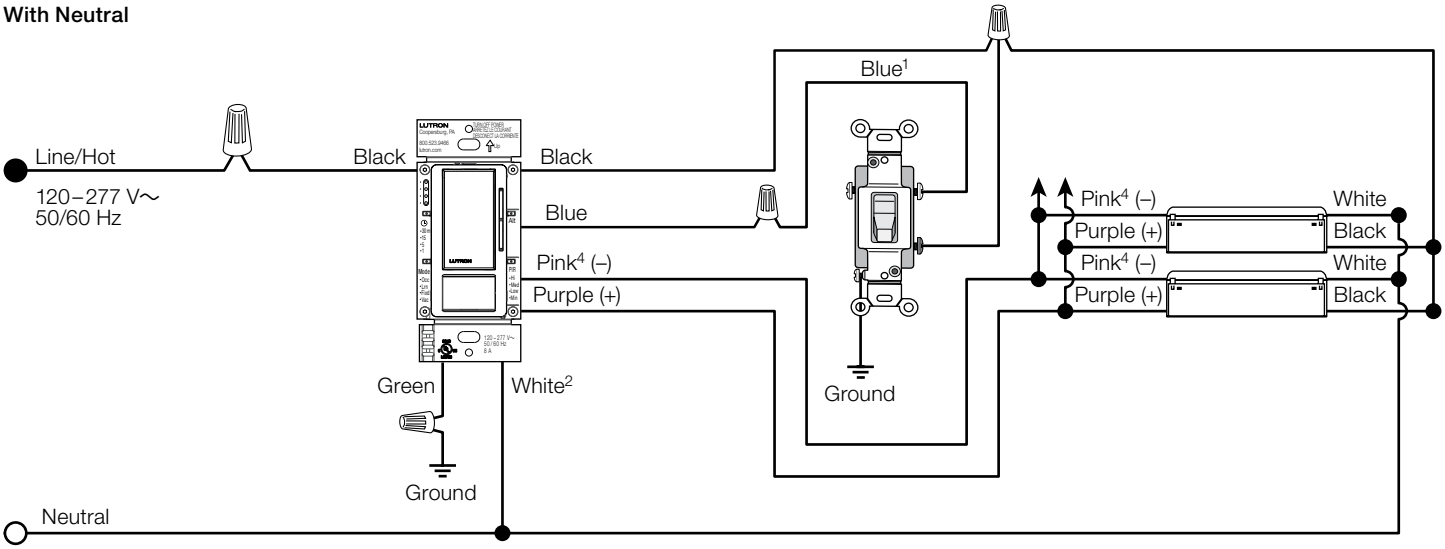

Without Neutral

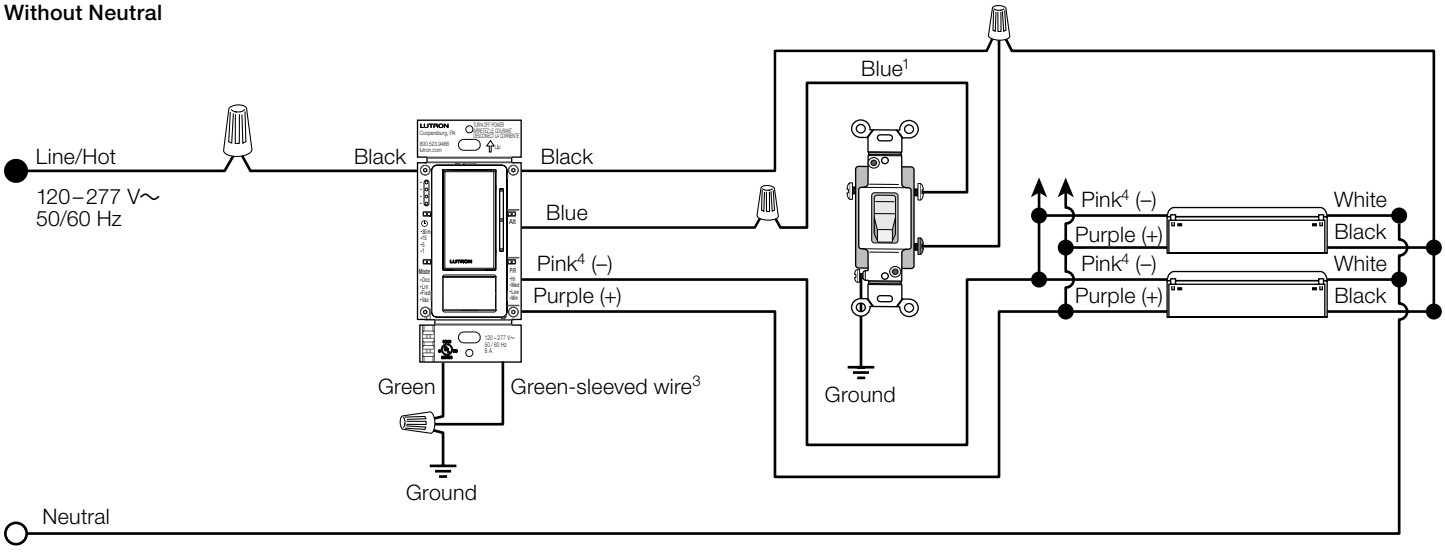

* One dimmer sensor can be installed in any location.

** **Important:** Some rewiring of 3-way mechanical switch is required. See page 10 for instructions.

1 The length of the blue wire (3-way wire) must not exceed 150 ft (45.72 m).

2 When neutral is present in wallbox, remove green sleeve from the white wire and connect the white wire to neutral.

3 If no neutral is present, connect green-sleeved wire to ground.

4 This wire/terminal may be gray on older products or in retrofit applications.

Job Name:	Model Numbers:	
Job Number:		

369833j 10 04.08.24

3-Way Retrofit Installation

For retrofit 3-way installations, the mechanical switch needs to be rewired as shown in the diagram below after wiring the dimmer sensor. Otherwise, the 3-way installation will not work as expected. Single-pole mechanical switches may also be used in a 3-way installation with MS-Z101, MS-Z101-V and WMS-Z101 models.

1. Connect Ground: Ensure that the bare copper or green ground wire from the wallbox is connected to the green ground screw of the mechanical switch.
2. Tag circuit Common: Your 3-way mechanical switch should have three screw terminals, two of the same color, and one of a different color. Tag the wire that is connected to the screw terminal of a different color.
3. Identify the wire that matches the color of the wire you connected to the blue wire of the Maestro dimmer sensor. Connect this wire to one of the two terminals of the same color.
4. Combine the tagged wire, the remaining wire, and the yellow jumper wire (included) using a wire connector. Connect the other end of jumper wire to the different color screw.

Note: If the 0–10 V dimmer sensor is first installed with a traditional 3-way mechanical switch and the mechanical switch is later replaced with a Maestro accessory switch, the 0–10 V dimmer sensor will need to be returned to factory default settings in order to function correctly.

Traditional 3-Way Mechanical Switch Wiring

Rewired to →

3-Way Mechanical Switch Wiring with Dimmer Sensor

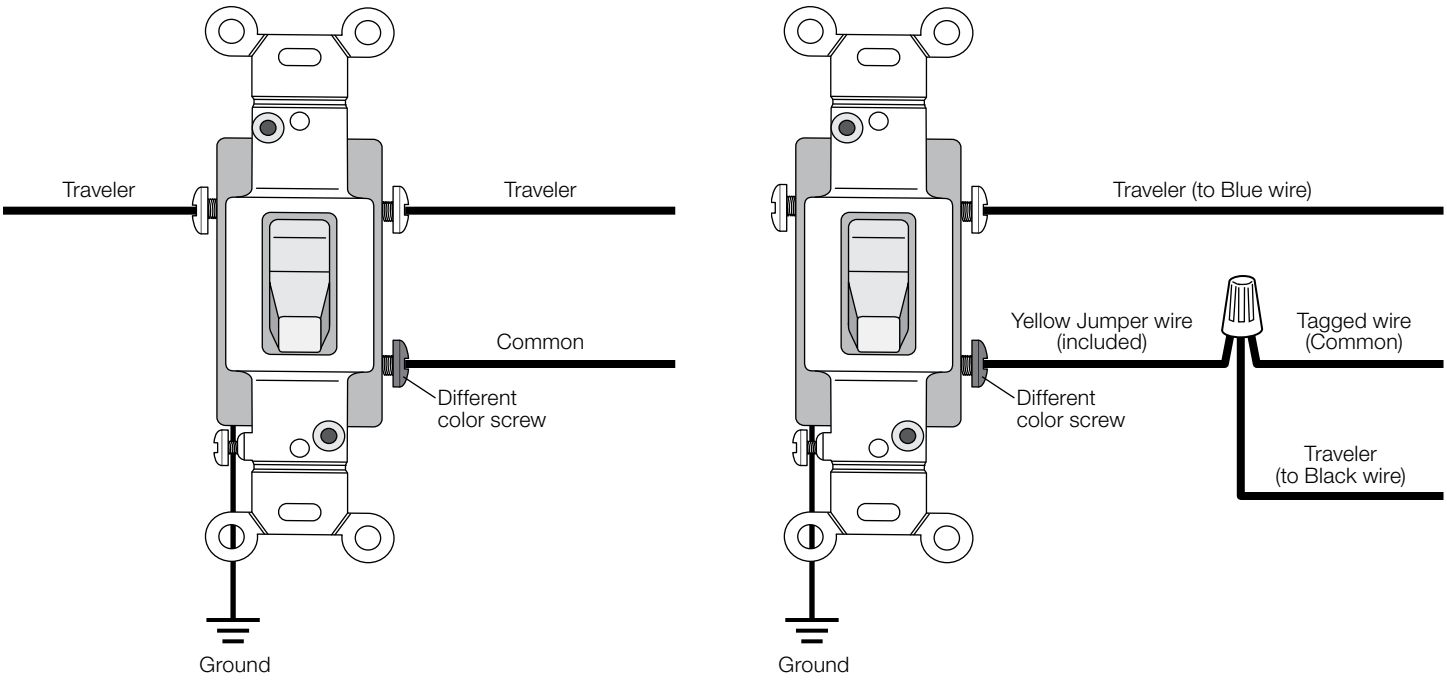

Job Name:	Model Numbers:	
Job Number:		

Wiring: 120 V∼ Multi-Location Installation* with Maestro Accessory Switches

Note: If the 0–10 V dimmer sensor is first installed with a traditional 3-way mechanical switch and the mechanical switch is later replaced with a Maestro accessory switch, the 0–10 V dimmer sensor will need to be returned to factory default settings in order to function correctly.

With Neutral

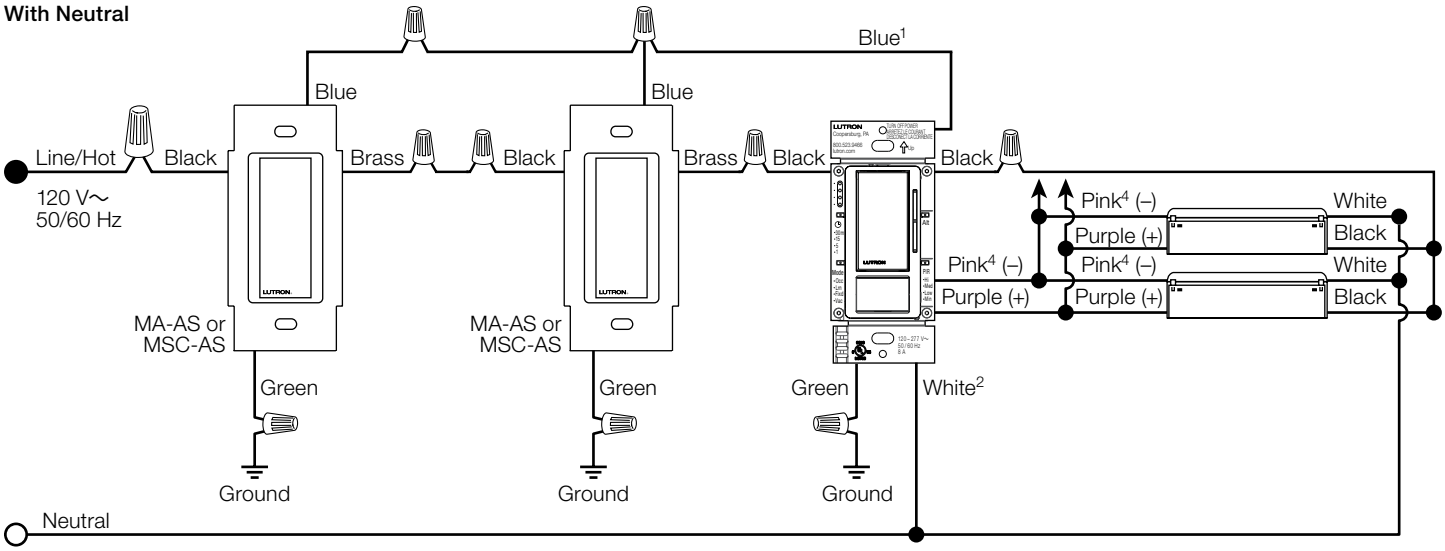

Without Neutral

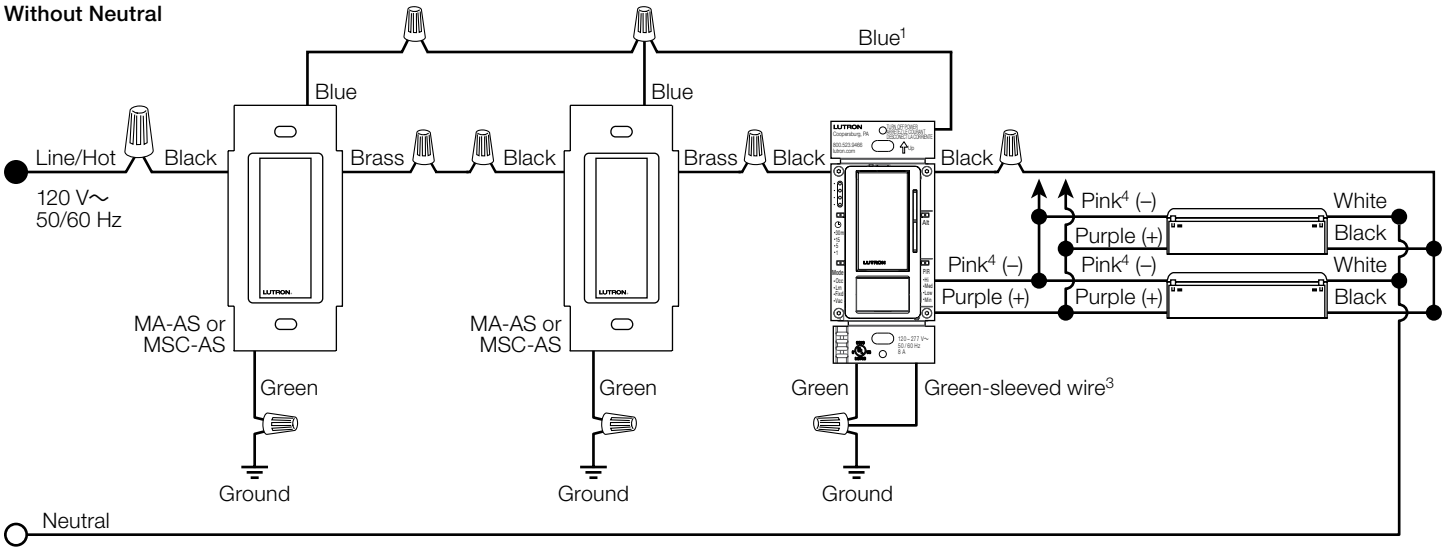

* One dimmer sensor can be installed in any location.

1 The length of the blue wire (3-way wire) must not exceed 150 ft (45.72 m).

2 When neutral is present in wallbox, remove green sleeve from the white wire and connect the white wire to neutral.

3 If no neutral is present, connect green-sleeved wire to ground.

4 This wire/terminal may be gray on older products or in retrofit applications.

Job Name:	Model Numbers:	
Job Number:		

Wiring: 220–277 V∼ Multi-Location Installation with Maestro Accessory Switches

Note: If the 0–10 V dimmer sensor is first installed with a traditional 3-way mechanical switch and the mechanical switch is later replaced with a Maestro accessory switch, the 0–10 V dimmer sensor will need to be returned to factory default settings in order to function correctly.

With Neutral

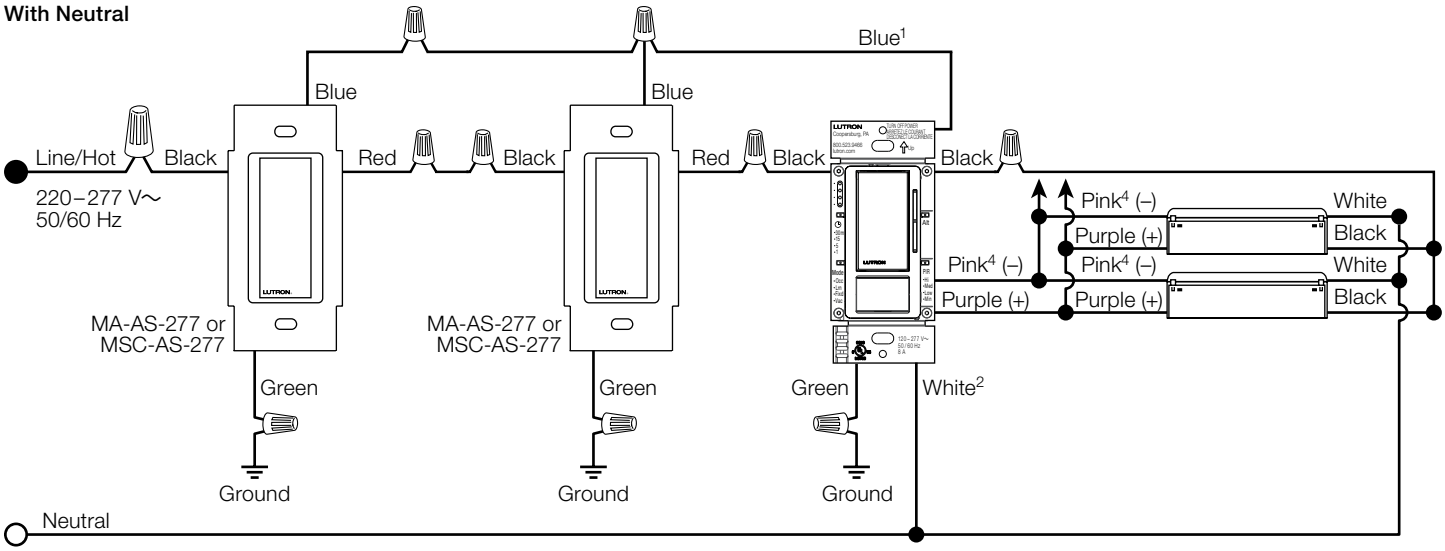

Without Neutral

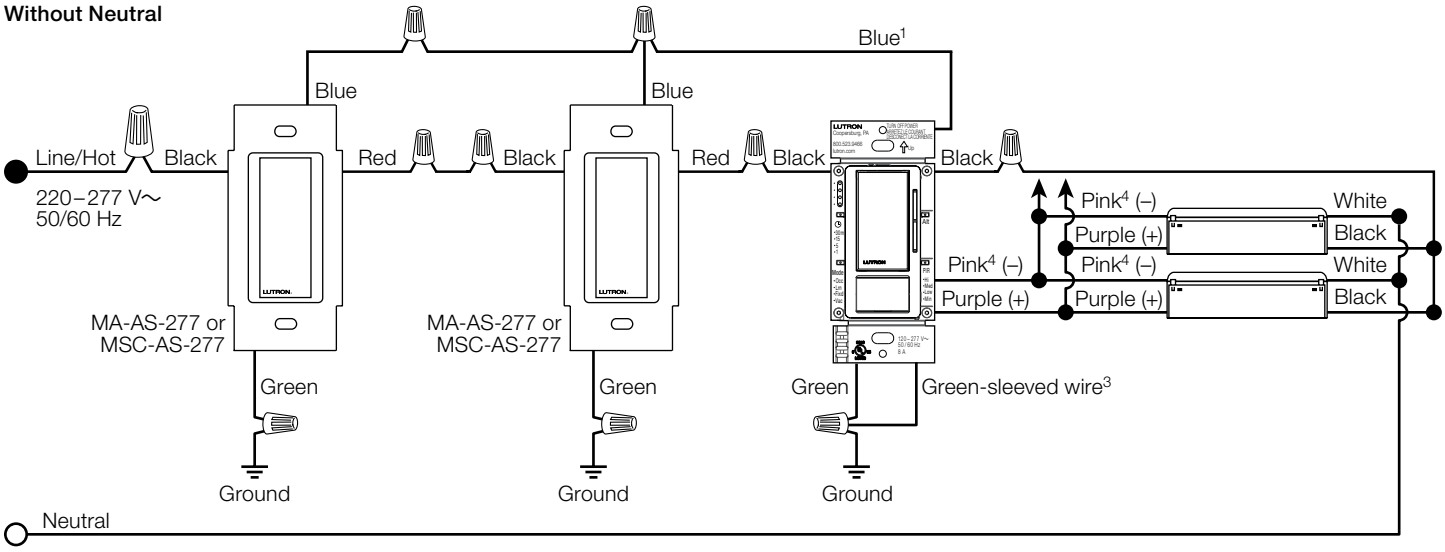

* One dimmer sensor can be installed in any location.

1 The length of the blue wire (3-way wire) must not exceed 150 ft (45.72 m).

2 When neutral is present in wallbox, remove green sleeve from the white wire and connect the white wire to neutral.

3 If no neutral is present, connect green-sleeved wire to ground.

4 This wire/terminal may be gray on older products or in retrofit applications.

Job Name:	Model Numbers:	
Job Number:		

Colors and Finishes

Gloss Finishes

White
WH

Ivory
IV

Almond
AL

Light Almond
LA

Gray
GR

Brown
BR

Black
BL

Satin Finishes

Snow
SW

Midnight
MN

Taupe
TP

Biscuit
BI

Palladium
PD

Hot
HT

For the latest color offerings please see our website:
http://www.lutron.com/satincolors

- Due to printing limitations, colors and finishes shown cannot be guaranteed to perfectly match actual product colors.
- Color chip keychains are available for more precise color matching:
  - Gloss Finishes: DG-CK-1
  - Satin Finishes: SF-CK-1

Lutron, the Lutron logo, Maestro, C•L, and XCT are trademarks or registered trademarks of Lutron Electronics Co., Inc. in the US and/or other countries. All other product names, logos, and brands are property of their respective owners.

Job Name:	Model Numbers:	
Job Number:		