3691131a 1 12.12.19

Caséta Wireless Repeater

The Caséta Wireless repeater allows for the wireless range expansion of your Caséta lighting control system for whole house coverage.

Caséta Wireless repeaters extend the range of Radio Frequency (RF) signals that are sent between devices. One wireless repeater can be added to extend the RF range for larger system applications. Each wireless repeater can communicate with Caséta devices within 30 ft (9 m), covering an area of approximately 2500 ft^2 (232 m^2), and can be placed up to 60 ft (18 m) from the Lutron bridge.

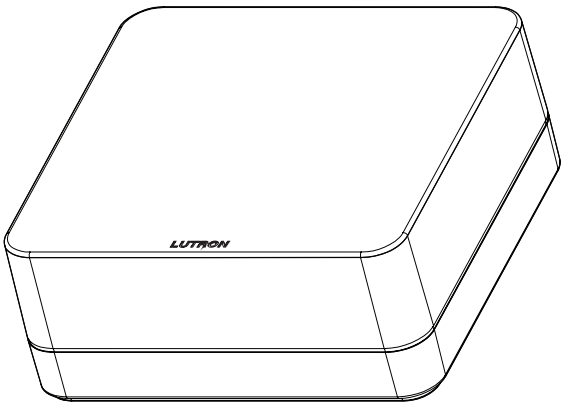

Caséta Wireless Repeater

Features

- Expands RF range
- Easily adds to an existing system through the Caséta App[1] or system software
- Can add one wireless repeater per system
- Works with Caséta Wireless systems

Model Available

PD-REP-WH

[1] The Caséta App is compatible with iOS® devices version 8.0 or later and Android™ devices 4.1 or later.

Job Name:	Model Numbers:	
Job Number:		

Specifications

Regulatory Approvals

- cULus Listed
- FCC approved
- IC certified
- IFETEL certified

Power

- 5 V⎓ 100 mA
- Power Supply (included): 5 V⎓ 550 mA, cable length 6 ft (1.83 m)

Typical Power Consumption

- Caséta Wireless repeater: 0.45 W
- Test Conditions: LED on, powered by the 5 V⎓ adapter

Environment

- Ambient operating temperature: 32 °F to 104 °F (0 °C to 40 °C)
- 0% to 90% humidity, non-condensing
- Indoor use only

Communications

- All devices must be located within 30 ft (9 m) of a repeater or bridge
- The repeater must be within 60 ft (18 m) of a bridge or within 30 ft (9 m) of a Plug-In Dimmer configured as a range extender
- Caséta Wireless repeater counts as one device towards the Caséta system device limit
- System devices operate on frequencies between 431.0 MHz to 437.0 MHz

Protection

- Tested to withstand electrostatic discharge without damage or memory loss in accordance with IEC 61000-4-2
- Tested to withstand surge voltages without damage or loss of operation, in accordance with IEEE C62.41-1991

Power Failure Memory

- Should power be interrupted, the wireless repeater will return to its previous state when power is restored

Connections

- USB (power only)

Job Name:	Model Numbers:	
Job Number:		

Dimensions

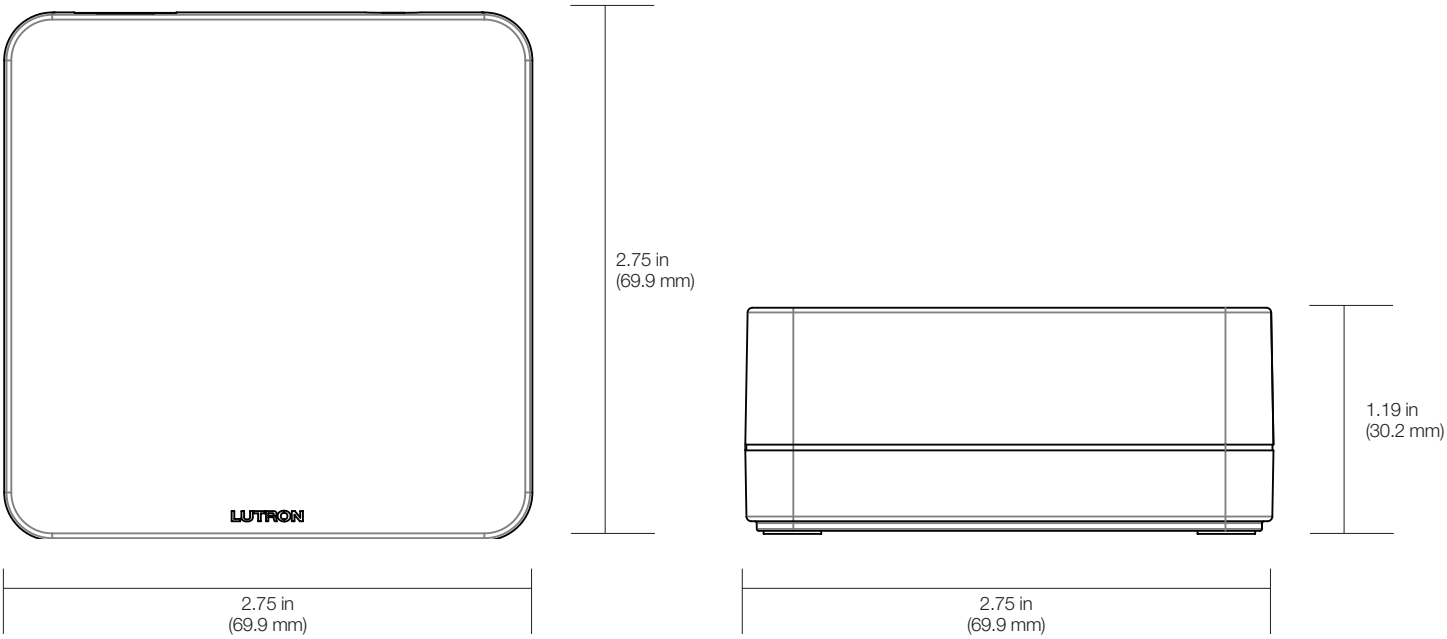

Job Name:	Model Numbers:	
Job Number:		

RF Range

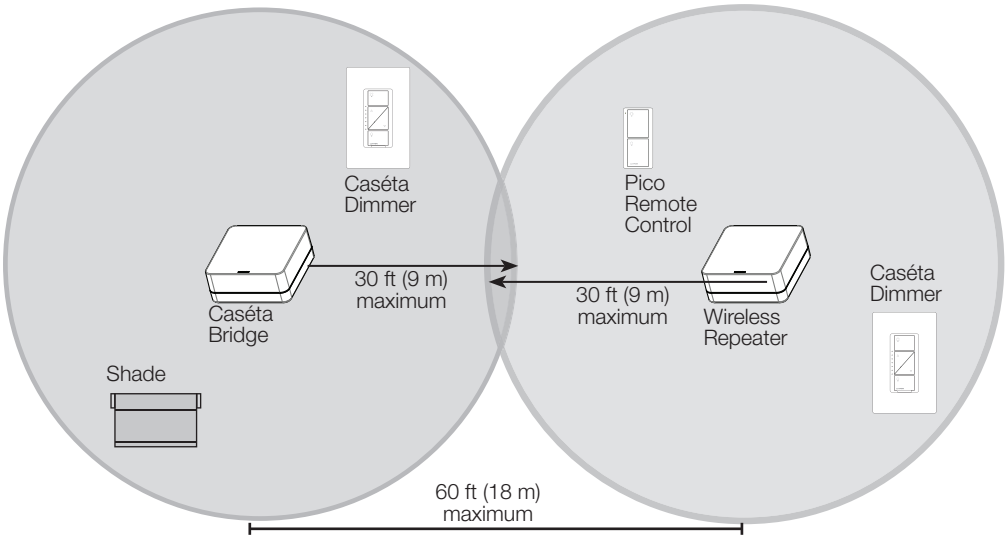

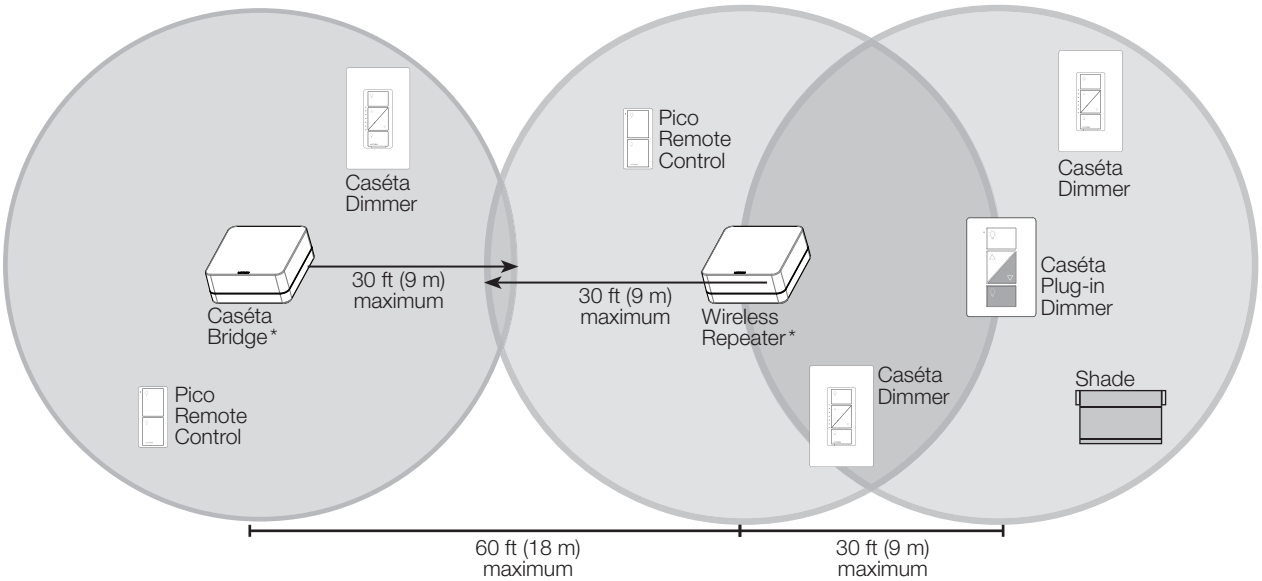

* Bridge and wireless repeater locations are interchangeable.

Connections

Back View

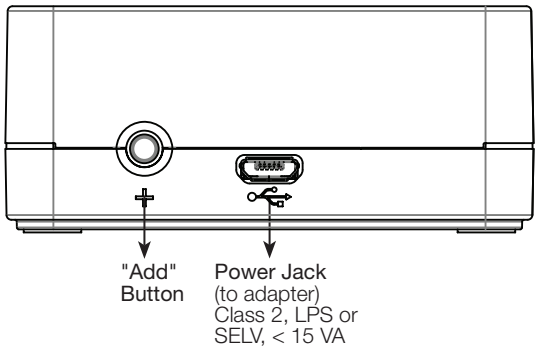

Lutron, Lutron, and Caséta are trademarks or registered trademarks of Lutron Electronics Co., Inc. in the US and/or other countries.

Job Name:	Model Numbers:	
Job Number:		

3691131a 1 12.12.19

Caséta Wireless Repeater

The Caséta Wireless repeater allows for the wireless range expansion of your Caséta lighting control system for whole house coverage.

Caséta Wireless repeaters extend the range of Radio Frequency (RF) signals that are sent between devices. One wireless repeater can be added to extend the RF range for larger system applications. Each wireless repeater can communicate with Caséta devices within 30 ft (9 m), covering an area of approximately 2500 ft^2 (232 m^2), and can be placed up to 60 ft (18 m) from the Lutron bridge.

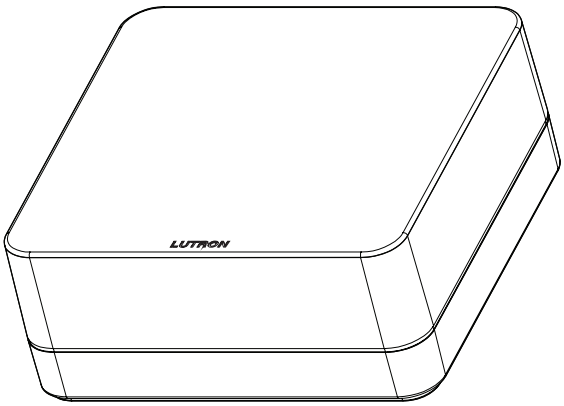

Caséta Wireless Repeater

Features

- Expands RF range
- Easily adds to an existing system through the Caséta App[1] or system software
- Can add one wireless repeater per system
- Works with Caséta Wireless systems

Model Available

PD-REP-WH

[1] The Caséta App is compatible with iOS® devices version 8.0 or later and Android™ devices 4.1 or later.

Job Name:	Model Numbers:	
Job Number:		

Specifications

Regulatory Approvals

- cULus Listed
- FCC approved
- IC certified
- IFETEL certified

Power

- 5 V⎓ 100 mA
- Power Supply (included): 5 V⎓ 550 mA, cable length 6 ft (1.83 m)

Typical Power Consumption

- Caséta Wireless repeater: 0.45 W
- Test Conditions: LED on, powered by the 5 V⎓ adapter

Environment

- Ambient operating temperature: 32 °F to 104 °F (0 °C to 40 °C)
- 0% to 90% humidity, non-condensing
- Indoor use only

Communications

- All devices must be located within 30 ft (9 m) of a repeater or bridge
- The repeater must be within 60 ft (18 m) of a bridge or within 30 ft (9 m) of a Plug-In Dimmer configured as a range extender
- Caséta Wireless repeater counts as one device towards the Caséta system device limit
- System devices operate on frequencies between 431.0 MHz to 437.0 MHz

Protection

- Tested to withstand electrostatic discharge without damage or memory loss in accordance with IEC 61000-4-2
- Tested to withstand surge voltages without damage or loss of operation, in accordance with IEEE C62.41-1991

Power Failure Memory

- Should power be interrupted, the wireless repeater will return to its previous state when power is restored

Connections

- USB (power only)

Job Name:	Model Numbers:	
Job Number:		

Dimensions

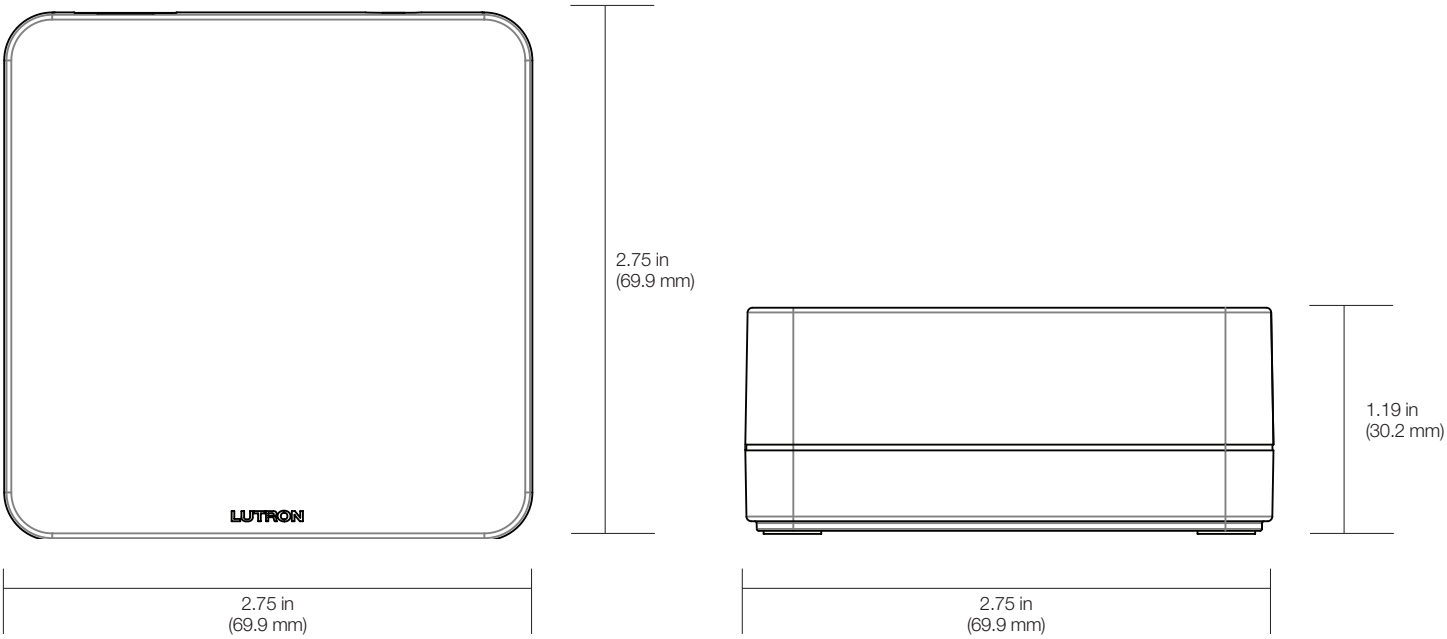

Job Name:	Model Numbers:	
Job Number:		

RF Range

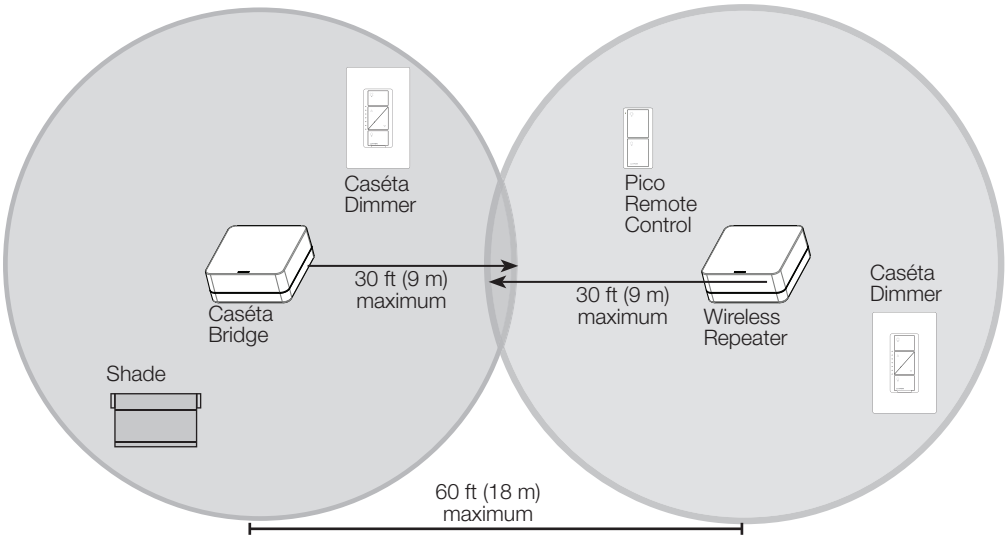

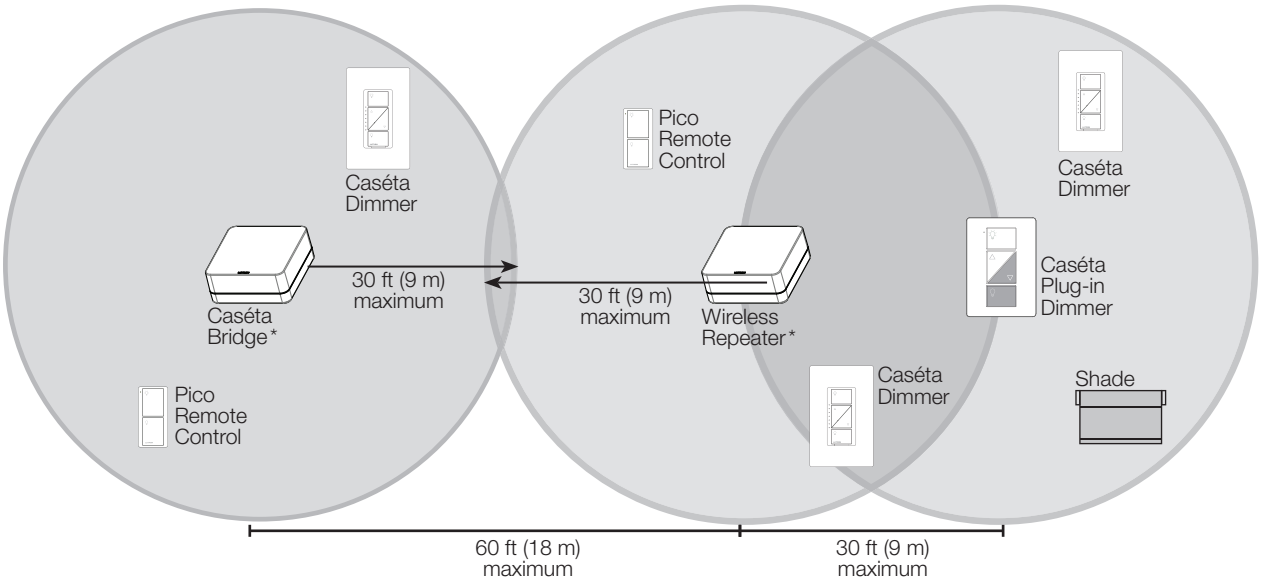

* Bridge and wireless repeater locations are interchangeable.

Connections

Back View

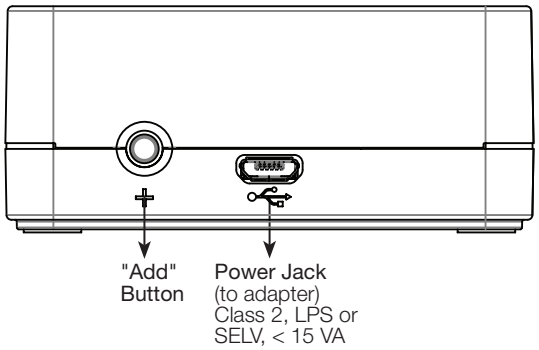

Lutron, Lutron, and Caséta are trademarks or registered trademarks of Lutron Electronics Co., Inc. in the US and/or other countries.

Job Name:	Model Numbers:	
Job Number:		