Conduit Unions

Description:

Plasti-Bond REDH$_2$OT UNF unions are used to connect conduit to conduit or to allow for future changes to the conduit system. Female threads are provided at each end. Plasti-Bond REDH$_2$OT UNY unions are used to connect conduit to a conduit fitting, junction box, or device enclosure. One end is a male thread and the other is female.

Features:

- 40 mil gray PVC exterior coating
- 2 mil red urethane interior coating
- 13 trade sizes from 1/2" through 6"
- Sealing sleeves on all conduit openings
- Molded PVC gasket seals fitting

Standards:

- UL 1203 (E476062)
- CSA C22.2 No. 30
- NEC/CEC:
- UNF/UNY 1/2" through 1"
  Class I, Division 1 & 2, Groups A, B, C, D
  Class II, Division 1, Groups E, F, G
  Class II, Division 2, Groups F, G
  Class III
- UNF/UNY 905, 1005
  Class I, Division 1 & 2, Groups B, C, D
  Class II, Division 1, Groups E, F, G
  Class II, Division 2, Groups F, G
  Class III
- UNF, UNY - all sizes
  Class I, Division 1 & 2, Groups C, D
  Class II, Division 1, Groups E, F, G
  Class II, Division 2, Groups F, G
  Class III

Conduit Union Technical Data

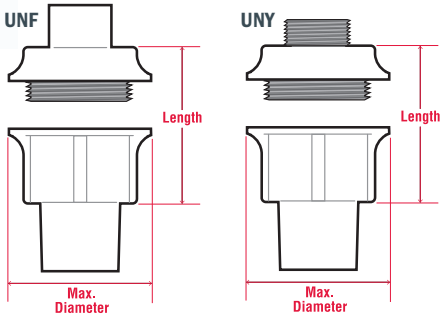

UNF

PIPE SIZE	FERROUS CATALOG #	NOMINAL WEIGHT	LENGTH	MAX DIA.	ALUMINUM CATALOG #
1/2"	PRUNF105	0.3	1.81	2.00	PRUNF105SA
3/4"	PRUNF205	0.5	1.75	2.25	PRUNF205SA
3/4" - 1/2"	PRUNF215	0.6	1.75	2.25	–
1"	PRUNF305	0.7	2.00	2.75	PRUNF305SA
1-1/4"	PRUNF405	1.5	2.25	3.00	PRUNF405SA
1-1/2"	PRUNF505	2.3	2.63	3.50	PRUNF505SA
2"	PRUNF605	3.6	2.56	4.50	PRUNF605SA
2-1/2"	PRUNF705	5.0	3.19	4.75	PRUNF705SA
3"	PRUNF805	6.5	3.44	5.50	PRUNF805SA
3-1/2"	PRUNF905	8.2	4.13	6.50	PRUNF905SA
4"	PRUNF1005	10.0	4.13	7.00	PRUNF1005SA
5"	PRUNF012	12.5	3.81	9.00	–
6"	PRUNF014	14.8	3.81	10.25	–

UNY

PIPE SIZE	FERROUS CATALOG #	NOMINAL WEIGHT	LENGTH	MAX DIA.	ALUMINUM CATALOG #
1/2"	PRUNY105	0.4	2.38	2.00	PRUNY105SA
3/4"	PRUNY205	0.7	2.44	2.25	PRUNY205SA
3/4" - 1/2"	PRUNY215	0.8	2.44	2.25	–
1"	PRUNY305	1.3	2.75	2.75	PRUNY305SA
1-1/4"	PRUNY405	2.6	3.19	3.00	PRUNY405SA
1-1/2"	PRUNY505	3.9	3.56	3.50	PRUNY505SA
2"	PRUNY605	4.2	3.75	4.50	PRUNY605SA
2-1/2"	PRUNY705	5.5	4.63	4.75	PRUNY705SA
3"	PRUNY805	7.5	5.00	5.50	PRUNY805SA
3-1/2"	PRUNY905	8.4	5.50	6.50	PRUNY905SA
4"	PRUNY1005	10.5	5.63	7.00	PRUNY1005SA
5"	PRUNY012	12.0	5.25	9.00	–
6"	PRUNY014	14.9	5.38	10.25	–

Conduit Unions

Description:

Plasti-Bond REDH$_2$OT UNF unions are used to connect conduit to conduit or to allow for future changes to the conduit system. Female threads are provided at each end. Plasti-Bond REDH$_2$OT UNY unions are used to connect conduit to a conduit fitting, junction box, or device enclosure. One end is a male thread and the other is female.

Features:

- 40 mil gray PVC exterior coating
- 2 mil red urethane interior coating
- 13 trade sizes from 1/2" through 6"
- Sealing sleeves on all conduit openings
- Molded PVC gasket seals fitting

Standards:

- UL 1203 (E476062)
- CSA C22.2 No. 30
- NEC/CEC:
- UNF/UNY 1/2" through 1"
  Class I, Division 1 & 2, Groups A, B, C, D
  Class II, Division 1, Groups E, F, G
  Class II, Division 2, Groups F, G
  Class III
- UNF/UNY 905, 1005
  Class I, Division 1 & 2, Groups B, C, D
  Class II, Division 1, Groups E, F, G
  Class II, Division 2, Groups F, G
  Class III
- UNF, UNY - all sizes
  Class I, Division 1 & 2, Groups C, D
  Class II, Division 1, Groups E, F, G
  Class II, Division 2, Groups F, G
  Class III

Conduit Union Technical Data

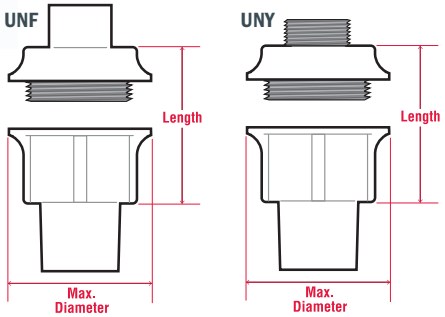

UNF

PIPE SIZE	FERROUS CATALOG #	NOMINAL WEIGHT	LENGTH	MAX DIA.	ALUMINUM CATALOG #
1/2"	PRUNF105	0.3	1.81	2.00	PRUNF105SA
3/4"	PRUNF205	0.5	1.75	2.25	PRUNF205SA
3/4" - 1/2"	PRUNF215	0.6	1.75	2.25	–
1"	PRUNF305	0.7	2.00	2.75	PRUNF305SA
1-1/4"	PRUNF405	1.5	2.25	3.00	PRUNF405SA
1-1/2"	PRUNF505	2.3	2.63	3.50	PRUNF505SA
2"	PRUNF605	3.6	2.56	4.50	PRUNF605SA
2-1/2"	PRUNF705	5.0	3.19	4.75	PRUNF705SA
3"	PRUNF805	6.5	3.44	5.50	PRUNF805SA
3-1/2"	PRUNF905	8.2	4.13	6.50	PRUNF905SA
4"	PRUNF1005	10.0	4.13	7.00	PRUNF1005SA
5"	PRUNF012	12.5	3.81	9.00	–
6"	PRUNF014	14.8	3.81	10.25	–

UNY

PIPE SIZE	FERROUS CATALOG #	NOMINAL WEIGHT	LENGTH	MAX DIA.	ALUMINUM CATALOG #
1/2"	PRUNY105	0.4	2.38	2.00	PRUNY105SA
3/4"	PRUNY205	0.7	2.44	2.25	PRUNY205SA
3/4" - 1/2"	PRUNY215	0.8	2.44	2.25	–
1"	PRUNY305	1.3	2.75	2.75	PRUNY305SA
1-1/4"	PRUNY405	2.6	3.19	3.00	PRUNY405SA
1-1/2"	PRUNY505	3.9	3.56	3.50	PRUNY505SA
2"	PRUNY605	4.2	3.75	4.50	PRUNY605SA
2-1/2"	PRUNY705	5.5	4.63	4.75	PRUNY705SA
3"	PRUNY805	7.5	5.00	5.50	PRUNY805SA
3-1/2"	PRUNY905	8.4	5.50	6.50	PRUNY905SA
4"	PRUNY1005	10.5	5.63	7.00	PRUNY1005SA
5"	PRUNY012	12.0	5.25	9.00	–
6"	PRUNY014	14.9	5.38	10.25	–