legrand®

Pass & Seymour

Switches
Extra Heavy-Duty
15, 20 & 30A, 120/277VAC

PS15AC1, PS15AC2, PS15AC3, PS15AC4, PS20AC1, PS20AC2, PS20AC3, PS20AC4, PS30AC1, PS30AC2, PS30AC3

Extra heavy-duty switches with quiet operation and a smooth feel.

Designed to withstand abuse and constant use in demanding applications, these durable switches virtually eliminate contact bounce and arcing. Featuring auto-ground and external, screw-pressure-plate back wiring on all terminals for fast, easy installation and excellent electrical connection. Oversize silver alloy contacts help ensure long life and better heat dissipation.

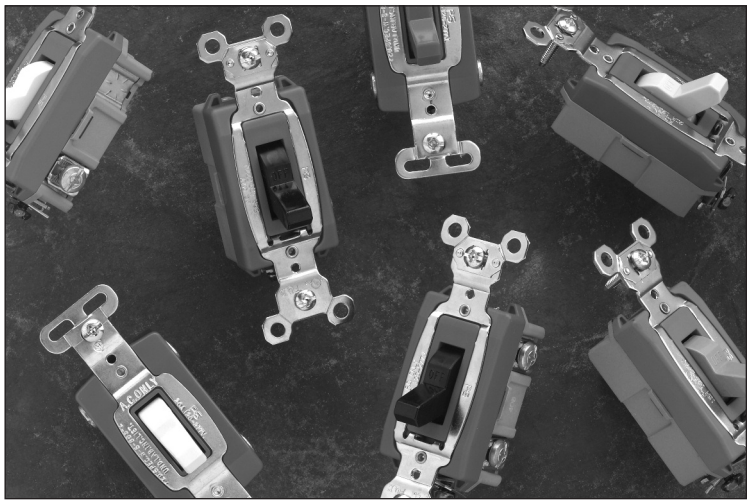

Features & Benefits

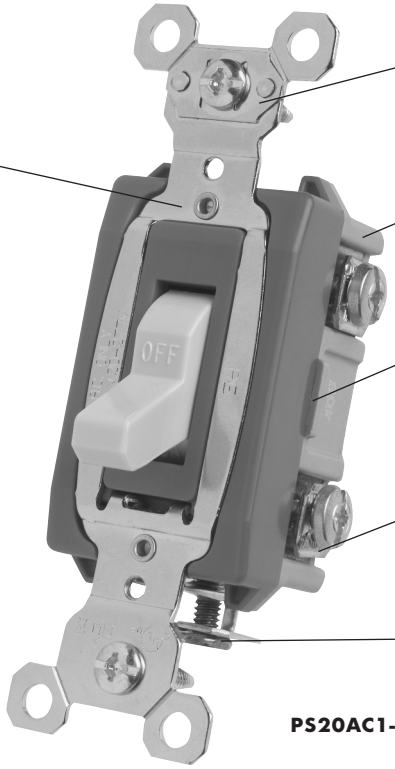

One-piece nickel-plated brass strap for superior corrosion-resistance.

Cam control and spring actuator for positive "makes and breaks" with a minimum of arcing.

Heavy-duty bumpers for quiet, smooth operation.

Oversized silver-alloy contacts for long life and better heat dissipation.

Heavy-duty, brass alloy, one-piece contact arm virtually eliminates contact bounce.

Shallow design for easier installation.

Auto-ground clip assures positive ground.

Glass-reinforced nylon back body for durability and strength.

Locking support provides resistance to face and back body separation.

Side and external screw-pressure-plate back wire with #14 – #10 AWG copper or copper-clad wire.

Grounding terminal is standard with screw-pressure-plate back wire.

PS20AC1-I

Field Uses/Vertical Markets

- Industrial
- Health Care
- Education
- Institutional

legrand®
Pass & Seymour

Switches
Extra Heavy-Duty
15, 20 & 30A, 120/277VAC

Ordering Information

Catalog Number				Rating		
Single Pole	Double Pole	Three-Way	Four-Way	A.	VAC	Color
Toggle Switches Back & Side Wire						
PS15AC1-I	PS15AC2-I	PS15AC3-I	PS15AC4-I	15	120/277	Ivory
PS15AC1-W	PS15AC2-W	PS15AC3-W	PS15AC4-W	15	120/277	White
PS15AC1	PS15AC2	PS15AC3	PS15AC4	15	120/277	Brown
PS15AC1-GRY	PS15AC2-GRY	PS15AC3-GRY	PS15AC4-GRY	15	120/277	Gray
PS15AC1-LA	PS15AC2-LA	PS15AC3-LA	PS15AC4-LA	15	120/277	Light Almond
PS20AC1-I	PS20AC2-I	PS20AC3-I		20	120/277	Ivory
PS20AC1-W	PS20AC2-W	PS20AC3-W	PS20AC4-W	20	120/277	White
PS20AC1	PS20AC2	PS20AC3	PS20AC4	20	120/277	Brown
PS20AC1-GRY	PS20AC2-GRY	PS20AC3-GRY	PS20AC4-GRY	20	120/277	Gray
PS20AC1-BK	PS20AC2-BK	PS20AC3-BK	PS20AC4-BK	20	120/277	Black
PS20AC1-RED	PS20AC2-RED	PS20AC3-RED	PS20AC4-RED	20	120/277	Red
PS20AC1-LA	PS20AC2-LA	PS20AC3-LA	PS20AC4-LA	20	120/277	Light Almond
PS30AC1-I	PS30AC2-I	PS30AC3-I		30	120/277	Ivory
	PS30AC2-W			30	120/277	White
PS30AC1	PS30AC2	PS30AC3		30	120/277	Brown

For more information on these and other P&S products refer to our Catalog or visit our web site.

Switches
Extra Heavy-Duty
15, 20 & 30A, 120/277VAC

legrand®
Pass & Seymour

Technical Specifications

3rd Party Compliance

UL Listed, File Number E140597, Standard UL20, General Use Snap Switches.
Federal Specification WS896.
cULus Listed, File Number LR17446, Standard CSA-C22.2 No. 111, General Use Snap Switches.
Conforms to NEMA WD-1 and WD-6.

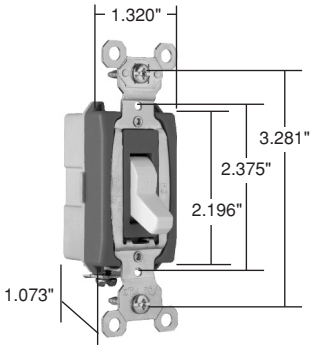

Dimensions for 15 & 20 Amp

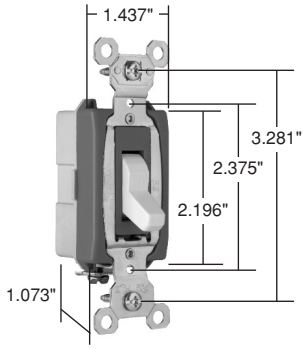

Dimensions for 30 Amp

Performance

Electrical	
Dielectric Withstand Voltage	1500V Minimum
Maximum Working Voltage	277VAC
Overload	Minimum 4.8 times rated current for 100 cycles
Temperature Rise	30°C maximum at rated current
Maximum Continuous Current	15, 20 and 30 Amps
Endurance	50,000 cycles minimum, resistive, inductive, tungsten filament lamp load (Fed Spec)
Mechanical	
Terminal Accommodations	#14 AWG – #10 AWG
Environmental	
Flammability	UL94 V2
Operating Temperature	Maximum continuous +115°C, minimum -40°C

Materials

Back Body	Glass-Reinforced Nylon	Contacts	Silver Cadmium Oxide
Front Body	Nylon	Spring Arm	Brass
Toggle	Thermoplastic Polycarbonate	Bumper	Rubber
Terminals	Brass	Spring	Zinc-Plated Steel
Terminal Screws	Tri-Drive Brass	Ground Terminal	Brass
Strap	Nickel-Plated Brass	Ground Screw	Tri-Drive Zinc-Plated Steel
Pressure Plate	Brass	Auto-Ground Clip	Nickel-Plated Brass

15 Amp Cover	Blue
20 Amp Cover	Red
30 Amp Cover	Green

Warranty

1 Year

Complimentary Devices & Accessories

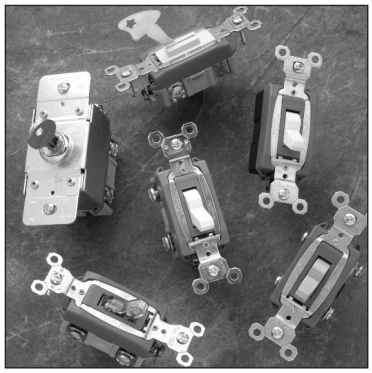

SWITCHES

- Heavy-Duty Lighted Toggle
- Heavy-Duty Security
- Heavy-Duty Locking
- Construction Grade Toggle
- Commercial Grade Toggle

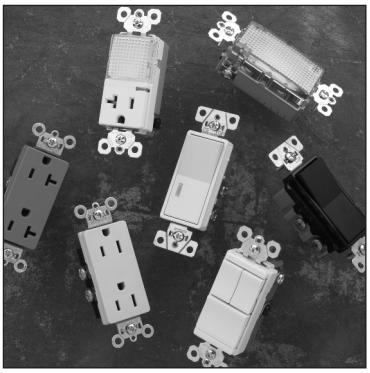

DECORATOR DEVICES

- Construction Grade Switches
- Specification Grade Combo Switches
- Construction Grade Receptacles
- Commercial Grade Receptacles
- Specification Grade Hallway Lights

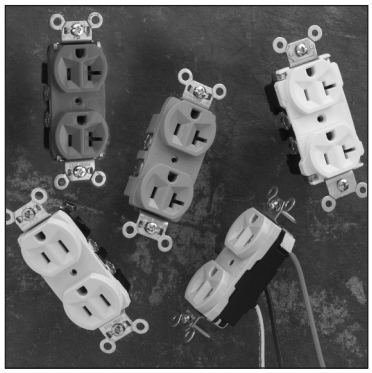

STRAIGHT BLADE RECEPTACLES

- Extra Heavy-Duty
- Heavy-Duty
- Hard Use
- Construction Grade
- Construction Grade Leaded
- Commercial Grade

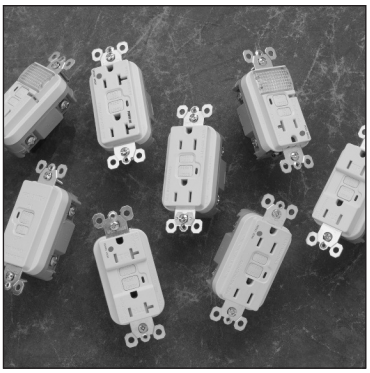

GFCIs

- Specification Grade
- Hospital Grade
- Dead Front

WALL PLATES

- TradeMaster® Thermoplastic Nylon
- Screwless Polycarbonate
- Stainless Steel
- Brass
- Aluminum
- Dustproof Stainless Steel Covers

Also available...

- Light Almond Devices
- Hospital Grade Devices
- PlugTail™ Devices
- TVSS & Isolated Ground Devices
- Ground Continuity Monitoring (GCM)
- Straight Blade Plugs & Connectors
- Turnlok® Locking Devices
- Weatherproof Boxes & Covers
- IEC 309 Industrial Products
- Flexcor® Wire Mesh Grips
- Configurable Solutions

legrand®

Legrand/Pass & Seymour
P.O. Box 4822
Syracuse, NY 13221-4822
800-223-4185

North America Headquarters
60 Woodlawn Street
West Hartford, CT 06110
Phone: 1.877.BY.LEGRAND (295.3472)
Fax: 1.860.232.2062
www.legrand.us

Legrand Canada
570 Applewood Crescent
Vaughan, ON, L4K 4B4
Phone: 905.738.9195
Fax: 905.738.9721
www.legrand.ca

SF101R2 — Updated April 2006 — For latest specs visit www.legrand.us/passandseymour

© 2010, Legrand/Pass & Seymour GG/DG

legrand®

Pass & Seymour

Switches
Extra Heavy-Duty
15, 20 & 30A, 120/277VAC

PS15AC1, PS15AC2, PS15AC3, PS15AC4, PS20AC1, PS20AC2, PS20AC3, PS20AC4, PS30AC1, PS30AC2, PS30AC3

Extra heavy-duty switches with quiet operation and a smooth feel.

Designed to withstand abuse and constant use in demanding applications, these durable switches virtually eliminate contact bounce and arcing. Featuring auto-ground and external, screw-pressure-plate back wiring on all terminals for fast, easy installation and excellent electrical connection. Oversize silver alloy contacts help ensure long life and better heat dissipation.

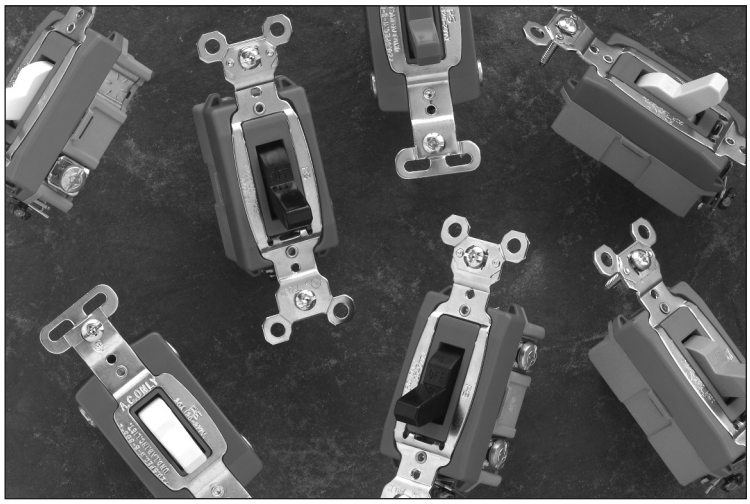

Features & Benefits

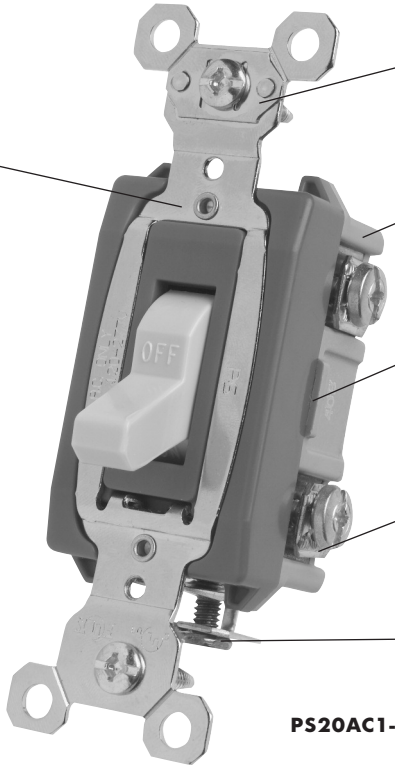

One-piece nickel-plated brass strap for superior corrosion-resistance.

Cam control and spring actuator for positive "makes and breaks" with a minimum of arcing.

Heavy-duty bumpers for quiet, smooth operation.

Oversized silver-alloy contacts for long life and better heat dissipation.

Heavy-duty, brass alloy, one-piece contact arm virtually eliminates contact bounce.

Shallow design for easier installation.

Auto-ground clip assures positive ground.

Glass-reinforced nylon back body for durability and strength.

Locking support provides resistance to face and back body separation.

Side and external screw-pressure-plate back wire with #14 – #10 AWG copper or copper-clad wire.

Grounding terminal is standard with screw-pressure-plate back wire.

PS20AC1-I

Field Uses/Vertical Markets

- Industrial
- Health Care
- Education
- Institutional

legrand®
Pass & Seymour

Switches
Extra Heavy-Duty
15, 20 & 30A, 120/277VAC

Ordering Information

Catalog Number				Rating		
Single Pole	Double Pole	Three-Way	Four-Way	A.	VAC	Color
Toggle Switches Back & Side Wire						
PS15AC1-I	PS15AC2-I	PS15AC3-I	PS15AC4-I	15	120/277	Ivory
PS15AC1-W	PS15AC2-W	PS15AC3-W	PS15AC4-W	15	120/277	White
PS15AC1	PS15AC2	PS15AC3	PS15AC4	15	120/277	Brown
PS15AC1-GRY	PS15AC2-GRY	PS15AC3-GRY	PS15AC4-GRY	15	120/277	Gray
PS15AC1-LA	PS15AC2-LA	PS15AC3-LA	PS15AC4-LA	15	120/277	Light Almond
PS20AC1-I	PS20AC2-I	PS20AC3-I		20	120/277	Ivory
PS20AC1-W	PS20AC2-W	PS20AC3-W	PS20AC4-W	20	120/277	White
PS20AC1	PS20AC2	PS20AC3	PS20AC4	20	120/277	Brown
PS20AC1-GRY	PS20AC2-GRY	PS20AC3-GRY	PS20AC4-GRY	20	120/277	Gray
PS20AC1-BK	PS20AC2-BK	PS20AC3-BK	PS20AC4-BK	20	120/277	Black
PS20AC1-RED	PS20AC2-RED	PS20AC3-RED	PS20AC4-RED	20	120/277	Red
PS20AC1-LA	PS20AC2-LA	PS20AC3-LA	PS20AC4-LA	20	120/277	Light Almond
PS30AC1-I	PS30AC2-I	PS30AC3-I		30	120/277	Ivory
	PS30AC2-W			30	120/277	White
PS30AC1	PS30AC2	PS30AC3		30	120/277	Brown

For more information on these and other P&S products refer to our Catalog or visit our web site.

Switches
Extra Heavy-Duty
15, 20 & 30A, 120/277VAC

legrand®
Pass & Seymour

Technical Specifications

3rd Party Compliance

UL Listed, File Number E140597, Standard UL20, General Use Snap Switches.
Federal Specification WS896.
cULus Listed, File Number LR17446, Standard CSA-C22.2 No. 111, General Use Snap Switches.
Conforms to NEMA WD-1 and WD-6.

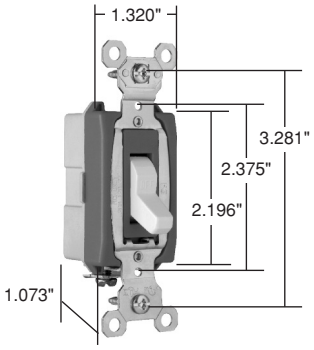

Dimensions for 15 & 20 Amp

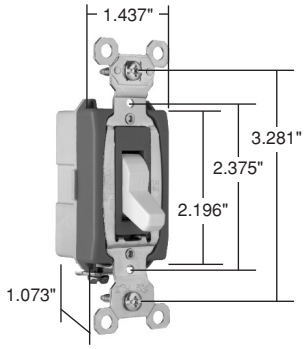

Dimensions for 30 Amp

Performance

Electrical	
Dielectric Withstand Voltage	1500V Minimum
Maximum Working Voltage	277VAC
Overload	Minimum 4.8 times rated current for 100 cycles
Temperature Rise	30°C maximum at rated current
Maximum Continuous Current	15, 20 and 30 Amps
Endurance	50,000 cycles minimum, resistive, inductive, tungsten filament lamp load (Fed Spec)
Mechanical	
Terminal Accommodations	#14 AWG – #10 AWG
Environmental	
Flammability	UL94 V2
Operating Temperature	Maximum continuous +115°C, minimum -40°C

Materials

Back Body	Glass-Reinforced Nylon	Contacts	Silver Cadmium Oxide
Front Body	Nylon	Spring Arm	Brass
Toggle	Thermoplastic Polycarbonate	Bumper	Rubber
Terminals	Brass	Spring	Zinc-Plated Steel
Terminal Screws	Tri-Drive Brass	Ground Terminal	Brass
Strap	Nickel-Plated Brass	Ground Screw	Tri-Drive Zinc-Plated Steel
Pressure Plate	Brass	Auto-Ground Clip	Nickel-Plated Brass

15 Amp Cover	Blue
20 Amp Cover	Red
30 Amp Cover	Green

Warranty

1 Year

Complimentary Devices & Accessories

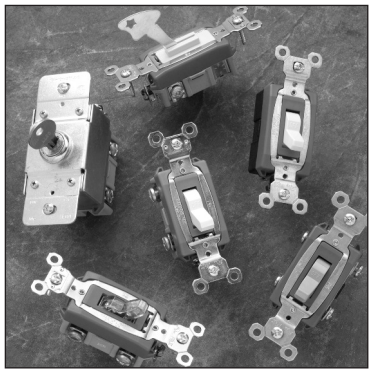

SWITCHES

- Heavy-Duty Lighted Toggle
- Heavy-Duty Security
- Heavy-Duty Locking
- Construction Grade Toggle
- Commercial Grade Toggle

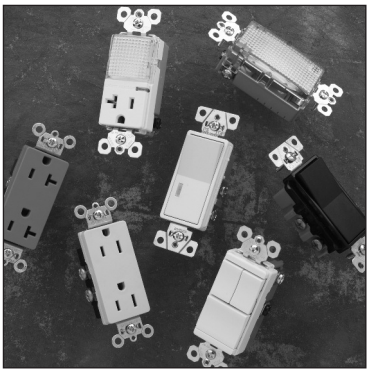

DECORATOR DEVICES

- Construction Grade Switches
- Specification Grade Combo Switches
- Construction Grade Receptacles
- Commercial Grade Receptacles
- Specification Grade Hallway Lights

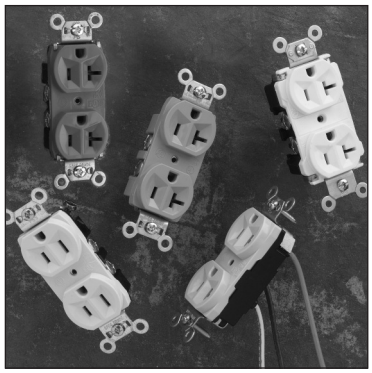

STRAIGHT BLADE RECEPTACLES

- Extra Heavy-Duty
- Heavy-Duty
- Hard Use
- Construction Grade
- Construction Grade Leaded
- Commercial Grade

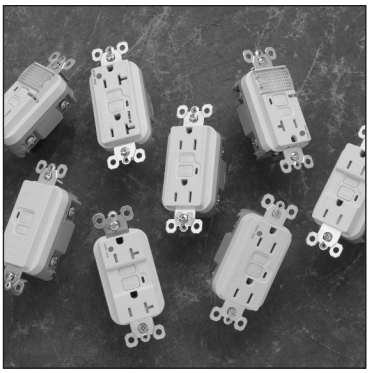

GFCIs

- Specification Grade
- Hospital Grade
- Dead Front

WALL PLATES

- TradeMaster® Thermoplastic Nylon
- Screwless Polycarbonate
- Stainless Steel
- Brass
- Aluminum
- Dustproof Stainless Steel Covers

Also available...

- Light Almond Devices
- Hospital Grade Devices
- PlugTail™ Devices
- TVSS & Isolated Ground Devices
- Ground Continuity Monitoring (GCM)
- Straight Blade Plugs & Connectors
- Turnlok® Locking Devices
- Weatherproof Boxes & Covers
- IEC 309 Industrial Products
- Flexcor® Wire Mesh Grips
- Configurable Solutions

legrand®

Legrand/Pass & Seymour
P.O. Box 4822
Syracuse, NY 13221-4822
800-223-4185

North America Headquarters
60 Woodlawn Street
West Hartford, CT 06110
Phone: 1.877.BY.LEGRAND (295.3472)
Fax: 1.860.232.2062
www.legrand.us

Legrand Canada
570 Applewood Crescent
Vaughan, ON, L4K 4B4
Phone: 905.738.9195
Fax: 905.738.9721
www.legrand.ca

SF101R2 — Updated April 2006 — For latest specs visit www.legrand.us/passandseymour

© 2010, Legrand/Pass & Seymour GG/DG