PASS & SEYMOUR®

radiant® Combination Devices 15A, 120/125VAC

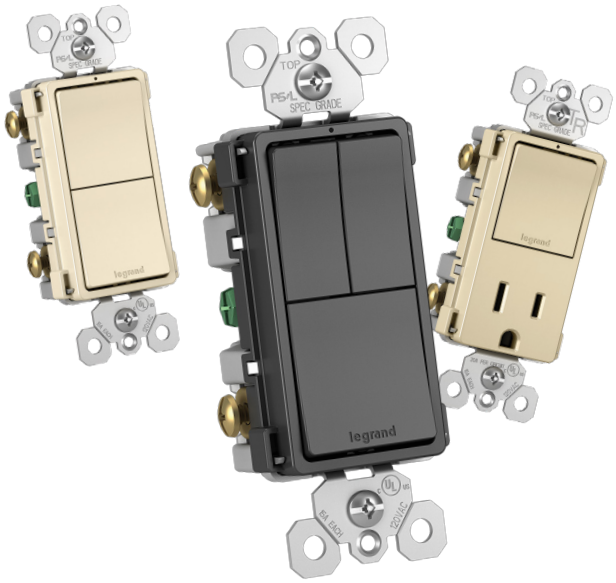

Greater lighting control in a single, space-saving device.

RCD11, RCD113, RCD33, RCD38TR

Aesthetically improved yet reliable as ever, these combination switches give end users greater lighting control by combining multiple functions in a one-gang configuration. Transform any of these devices into an illuminated switch in seconds with our Snap-In Light Module (RCDLM, sold separately). These combination switches are ideal for residential, multi-dwelling, commercial office and hospitality applications, and as part of the radiant® collection, now offer a better fit, form and finish.

Features & Benefits

Full wraparound metal strap, commercial grade with lock-in tabs.

All screws are tri-drive.

External screw-pressure-plate back and side wired. Accepts #14 - #10 AWG.

RCD113W

Snap-In Light Module (sold separately) White LED locator light glows when device is off for easy location in the dark.

Unique "Up/Down" switches match the look and feel of standard paddle switches.

Easy-to-use oversized main switch for primary load.

Impact-resistant face and body.

- Part of the radiant® collection
- Patented shutter system—now with black "invisi-shutters" for an invisible effect preferred by end users—helps prevent improper insertion of foreign objects (RCD38TR only).
- Single Pole/3-Way Switches can be wired as a single pole or 3-way switch.

.

- Patented split-circuit tab – easily accessible and can be reinstalled without a tool.

Snap-In Light Module:

- Lights when OFF.
- Uses energy-efficient LED light.
- LED light will not generate heat and will last, on average, 47 years.

3rd Party Compliance

cULus Listed, UL20, Conform to NEMA WD-1 and WD-6

Technical Information

Performance	
Electrical	
Supply Voltage	120/125VAC
Environmental	
Application	Indoor Use Only

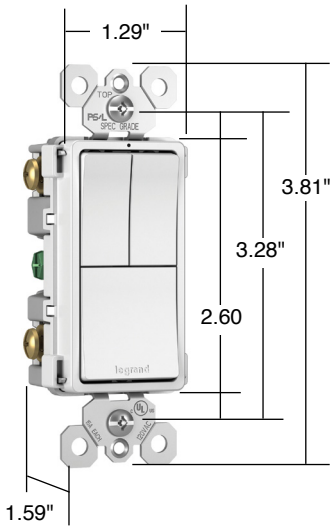

RCD113W

Warranty
One year

Ordering Information

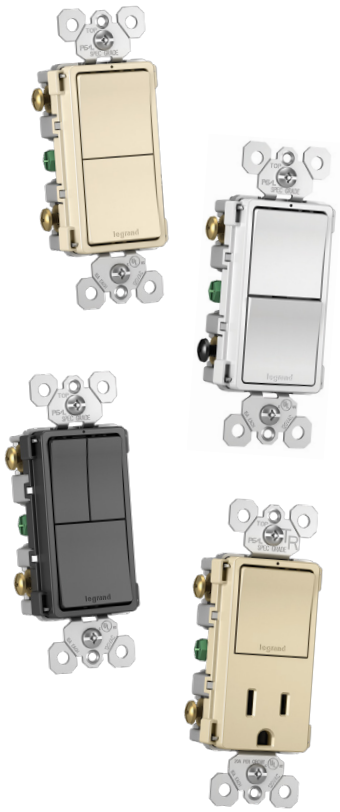

Two Single Pole Switches

	Rating			3rd Party Compliance	
Catalog Number	A	VAC	Color	UL20	cULus
RCD11I	15	120/125	Ivory	•	•
RCD11W	15	120/125	White	•	•
RCD11BK	15	120/125	Black	•	•
RCD11LA	15	120/125	Light Almond	•	•

Two Single Pole/3-Way Switches

RCD33I	15	120/125	Ivory	•	•
RCD33W	15	120/125	White	•	•
RCD33BK	15	120/125	Black	•	•
RCD33LA	15	120/125	Light Almond	•	•

Two Single Pole Switches & One Single Pole/3-Way Switch

RCD113I	15	120/125	Ivory	•	•
RCD113W	15	120/125	White	•	•
RCD113BK	15	120/125	Black	•	•
RCD113LA	15	120/125	Light Almond	•	•

Single Pole/3-Way Switch & Tamper-Resistant Receptacle

	Rating				3rd Party Compliance		
Catalog Number	A	VAC	Color	NEMA Config. No.	UL20	UL498	cULus
RCD38TRI	15	120/125	Ivory	5-15R	•	•	•
RCD38TRW	15	120/125	White	5-15R	•	•	•
RCD38TRBK	15	120/125	Black	5-15R	•	•	•
RCD38TRLA	15	120/125	Light Almond	5-15R	•	•	•

Features

- Module simply snaps-in for easy installation.

Snap-In Light Module:

- Lights when OFF.
- Uses energy-efficient LED light.
- LED light will not generate heat and will last, on average, 47 years.

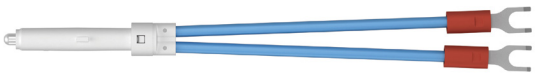

RCDLM

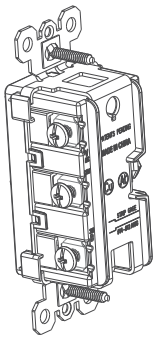

Adding a Snap-In Light Module

radiant® Locator Light Module

	Rating			3rd Party Compliance
Catalog Number	A	VAC	Color	cULus
RCDLM	15	120/125	Clear	•

Vertical Markets

- **Residential**
- **Multiple Dwelling**
- **Hospitality/Lodging**

Also available in the radiant® collection

- **GFCI Receptacles**
- **Tamper-Resistant and Standard Duplex Receptacles**
- **Paddle Switches**
- **Lighting & Fan Controls**
- **Sensors**
- **Timers**
- **Home Automation Controls**
- **USB Charging Devices**
- **Night Lights**
- **Screwless Wall Plates**

The paper used to print this document is an environmentally responsible paper with 10% post consumer waste, with FSC and SFI Chain of Custody certifications, Lacey Act complaint. 100% of the electricity used to manufacture Flo sheets is generated with Green-e certified renewable energy.

All brand and product names referenced in this document are registered trademarks or trademarks of their respective holders.

Legrand, North America
60 Woodlawn Street
West Hartford, CT 06110
1.877.BY.LEGRAND (295.3472)
www.legrand.us

570 Applewood Crescent
Vaughan, Ontario L4K 4B4
905.738.9195
www.legrand.ca

FOLLOW US

SF20196 September 2017 **©2017 Legrand All Rights Reserved**

PASS & SEYMOUR®

radiant® Combination Devices 15A, 120/125VAC

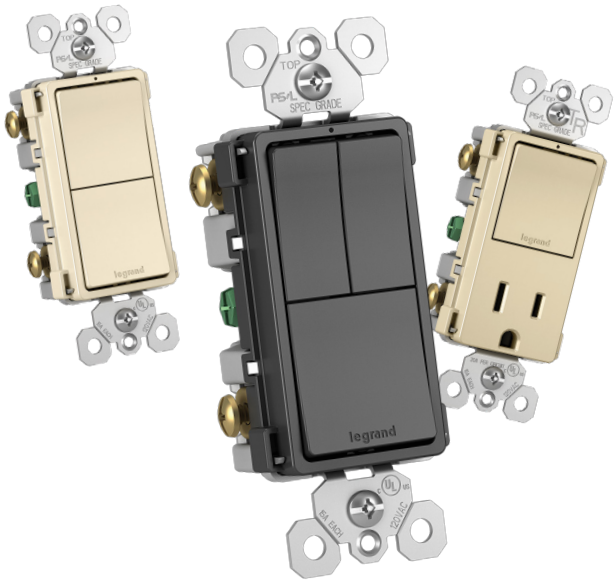

Greater lighting control in a single, space-saving device.

RCD11, RCD113, RCD33, RCD38TR

Aesthetically improved yet reliable as ever, these combination switches give end users greater lighting control by combining multiple functions in a one-gang configuration. Transform any of these devices into an illuminated switch in seconds with our Snap-In Light Module (RCDLM, sold separately). These combination switches are ideal for residential, multi-dwelling, commercial office and hospitality applications, and as part of the radiant® collection, now offer a better fit, form and finish.

Features & Benefits

Full wraparound metal strap, commercial grade with lock-in tabs.

All screws are tri-drive.

External screw-pressure-plate back and side wired. Accepts #14 - #10 AWG.

RCD113W

Snap-In Light Module (sold separately) White LED locator light glows when device is off for easy location in the dark.

Unique "Up/Down" switches match the look and feel of standard paddle switches.

Easy-to-use oversized main switch for primary load.

Impact-resistant face and body.

- Part of the radiant® collection
- Patented shutter system—now with black "invisi-shutters" for an invisible effect preferred by end users—helps prevent improper insertion of foreign objects (RCD38TR only).
- Single Pole/3-Way Switches can be wired as a single pole or 3-way switch.

.

- Patented split-circuit tab – easily accessible and can be reinstalled without a tool.

Snap-In Light Module:

- Lights when OFF.
- Uses energy-efficient LED light.
- LED light will not generate heat and will last, on average, 47 years.

3rd Party Compliance

cULus Listed, UL20, Conform to NEMA WD-1 and WD-6

Technical Information

Performance	
Electrical	
Supply Voltage	120/125VAC
Environmental	
Application	Indoor Use Only

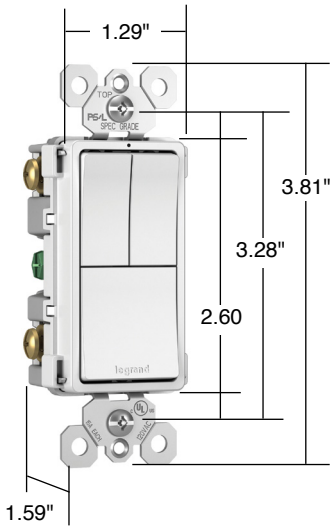

RCD113W

Warranty
One year

Ordering Information

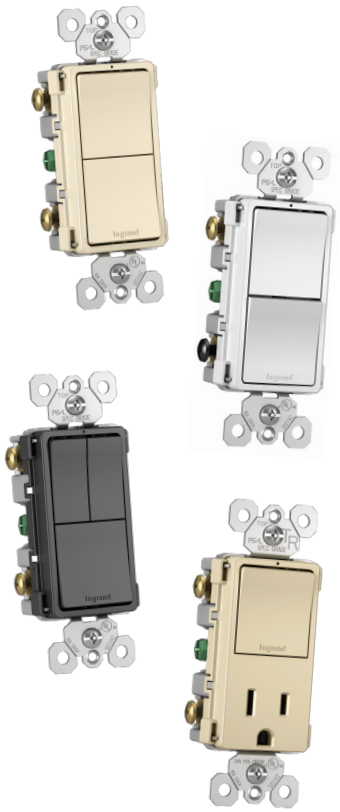

Two Single Pole Switches

	Rating			3rd Party Compliance	
Catalog Number	A	VAC	Color	UL20	cULus
RCD11I	15	120/125	Ivory	•	•
RCD11W	15	120/125	White	•	•
RCD11BK	15	120/125	Black	•	•
RCD11LA	15	120/125	Light Almond	•	•

Two Single Pole/3-Way Switches

RCD33I	15	120/125	Ivory	•	•
RCD33W	15	120/125	White	•	•
RCD33BK	15	120/125	Black	•	•
RCD33LA	15	120/125	Light Almond	•	•

Two Single Pole Switches & One Single Pole/3-Way Switch

RCD113I	15	120/125	Ivory	•	•
RCD113W	15	120/125	White	•	•
RCD113BK	15	120/125	Black	•	•
RCD113LA	15	120/125	Light Almond	•	•

Single Pole/3-Way Switch & Tamper-Resistant Receptacle

	Rating				3rd Party Compliance		
Catalog Number	A	VAC	Color	NEMA Config. No.	UL20	UL498	cULus
RCD38TRI	15	120/125	Ivory	5-15R	•	•	•
RCD38TRW	15	120/125	White	5-15R	•	•	•
RCD38TRBK	15	120/125	Black	5-15R	•	•	•
RCD38TRLA	15	120/125	Light Almond	5-15R	•	•	•

Features

- Module simply snaps-in for easy installation.

Snap-In Light Module:

- Lights when OFF.
- Uses energy-efficient LED light.
- LED light will not generate heat and will last, on average, 47 years.

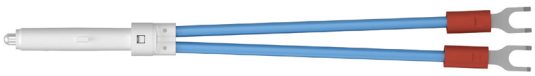

RCDLM

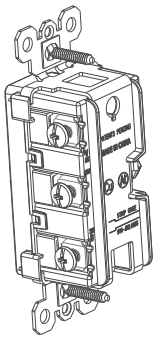

Adding a Snap-In Light Module

radiant® Locator Light Module

	Rating			3rd Party Compliance
Catalog Number	A	VAC	Color	cULus
RCDLM	15	120/125	Clear	•

Vertical Markets

- **Residential**
- **Multiple Dwelling**
- **Hospitality/Lodging**

Also available in the radiant® collection

- **GFCI Receptacles**
- **Tamper-Resistant and Standard Duplex Receptacles**
- **Paddle Switches**
- **Lighting & Fan Controls**
- **Sensors**
- **Timers**
- **Home Automation Controls**
- **USB Charging Devices**
- **Night Lights**
- **Screwless Wall Plates**

The paper used to print this document is an environmentally responsible paper with 10% post consumer waste, with FSC and SFI Chain of Custody certifications, Lacey Act complaint. 100% of the electricity used to manufacture Flo sheets is generated with Green-e certified renewable energy.

All brand and product names referenced in this document are registered trademarks or trademarks of their respective holders.

Legrand, North America
60 Woodlawn Street
West Hartford, CT 06110
1.877.BY.LEGRAND (295.3472)
www.legrand.us

570 Applewood Crescent
Vaughan, Ontario L4K 4B4
905.738.9195
www.legrand.ca

FOLLOW US

SF20196 September 2017 **©2017 Legrand All Rights Reserved**