Project:

Location:

Product Type:

Contact/Phone:

Model #:

T100 Series

The T100 Series Mechanical Time Switches are heavy-duty switches that have the highest horsepower ratings in the industry for industrial, commercial and residential applications.

Features

- Provides direct 24-Hour control of most loads
- Control electrical loads up to 40 Amps
- 1 to 12 ON/OFF operations each day
- Minimum ON/OFF times of 1 hour
- Manual override
- All models equipped with one ON and one OFF tripper

Ratings

Enclosure Type:	See table
Knockouts:	Combination ½"- ¾" nominal knockouts, one on back and on each side, and two on bottom
Switch Type:	See table
Switch Rating:	Each Pole 40 Amp Resistive, 120-480 VAC 40 Amp Tungsten, Inductive or 1000 VA Pilot Duty, 120-277 VAC 2 HP (24 FLA) 120 VAC 5 HP (28 FLA) 240 VAC single-phase
Power Input:	3 W Maximum
Operating Temperature:	-40°F to 130°F (-40°C to 54°C)
Shipping Weight:	Type 1 - 3 lbs. (1.4 kg) Type 3R - 4 lbs. (1.8 kg)
Warranty:	Limited 1 year

T101R

T104PCD82

T101

Model with Type 1 Steel Enclosure	Model with Type 3R Steel Enclosure	Model with Type 3R Plastic Enclosure	Model with Plastic Type 3R Enclosure with See Through Cover	Switch Type	Clock Motor Volts	Hz	Amps/ Pole	HP Rating
T101	**T101R**	**T101P**	**T101PCD82**	SPST	125	60	40	2
T102	**T102R**	**T102P**	**-**	SPST	208-277	60	40	5
T103	**T103R**	**T103P**	**T103PCD82**	DPST	125	60	40	2
T104	**T104R**	**T104P**	**T104PCD82**	DPST	208-277	60	40	5
T104-50	**-**	-	-	DPST	208-277	50	40	5
T101B**	**-**	-	-	SPST	125	60	40	2
T105	**-**	-	-	1NO/1NC*	125	60	40	2
N/A	**T106R**	-	-	1NO/1NC*	208-277	60	40	5

*Can be wired SPDT
**Separate Clock Motor Terminals

T100 Series

Specification

The time switch shall be of the 24-Hour dial type, capable of permitting up to 12 ON/OFF operations each day. The time switch shall provide a minimum ON/OFF time of 1 hour. The time switch shall be powered by _____ (125)(208-277) VAC,_____ (50)(60) Hz power supply. The time switch motor shall be a synchronous motor, which shall be designed to withstand a minimum of 6000 volt transients. The time switch motor shall be connected to the supply terminals with ring-type connectors and shall not require more than 3 Watts to operate the time switch. The time switch mechanism shall be a snap-in design to provide ease of mechanism removal from the enclosure. The time switch enclosure shall be a _____(Type 1 steel)(Type 3R steel)(Type 3R plastic with see through cover) lockable enclosure. The time switch enclosure shall provide a minimum of 31 cubic inches of wiring space and provide a non-removable cover, which shall swing open a full 180 degrees. The time switch shall provide clear terminal identification on a see-through non-curling terminal insulator. A visual indicator shall be provided in the time switch for inspecting clock motor operation. The time switch contact blades shall be a one piece design with welded silver alloy contacts and shall be designed to provide wiping action on contacts during operation to ensure reliable load switching. Terminal connections shall be made using teeter-type terminal screws to provide secure connections for wire sizes up to #8 AWG. Switch configuration shall be _____ (SPST)(DPST) (1NO/1NC) with a switch rating each pole:

- 40 Amp Resistive, 120-480 VAC
- 40 Amp Tungsten, Inductive or 1000 VA Pilot Duty each pole, 120-277 VAC
- 2 HP (24 FLA), 120 VAC
- 5 HP (28 FLA), 240 VAC

The time switch shall be Agency Listed under Clock Operated Switches and shall be Intermatic model _____ (See Model Numbers Listed).

Diagrams

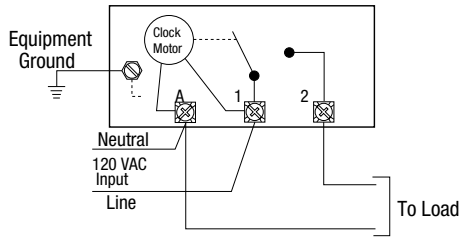

Model T101 SPST

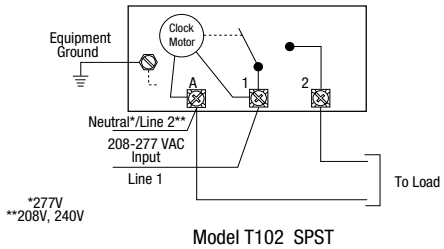

Model T102 SPST

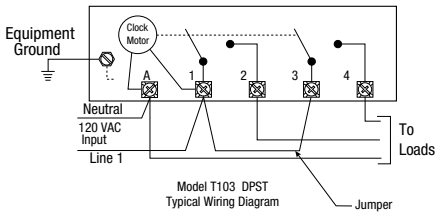

Model T103 DPST
Typical Wiring Diagram

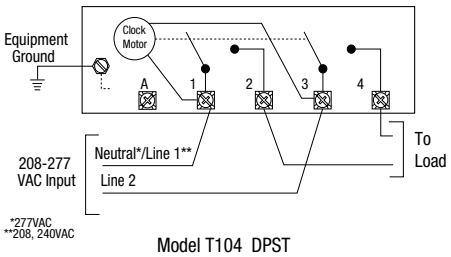

Model T104 DPST

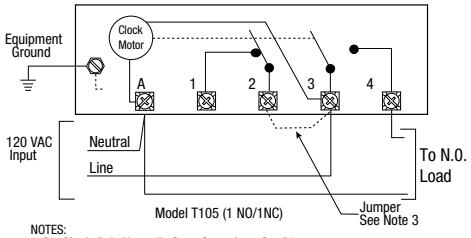

Model T105 (1 NO/1NC)

NOTES:
1. **For Single Pole Normally Open Operation** - See Diagram
2. **For Single Pole Normally Closed operation** - move motor lead from Terminal 3 to Terminal 2. Connect LINE to Terminal 2 and LOAD to Terminal 1.
3. **For Single Pole Double Throw operation** - install JUMPER between Terminals 2 and 3; Connect LINE to Terminal 2; N.O. LOAD to Terminal 4 and N.C. LOAD to Terminal 1. Connect COMMON to Terminal A.

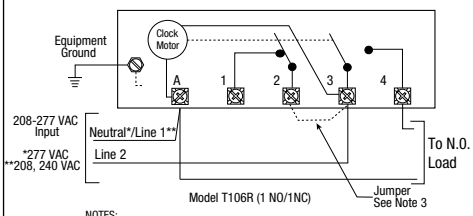

Model T106R (1 NO/1NC)

NOTES:
1. **For Single Pole Normally Open Operation** - See Diagram
2. **For Single Pole Normally Closed operation** - move motor lead from Terminal 3 to Terminal 2. Connect LINE to Terminal 2 and LOAD to Terminal 1.
3. **For Single Pole Double Throw operation** - install JUMPER between Terminals 2 and 3; Connect LINE to Terminal 2; N.O. LOAD to Terminal 4 and N.C. LOAD to Terminal 1. Connect COMMON to Terminal A.

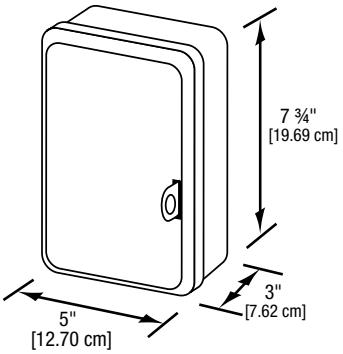

Type 1 Steel

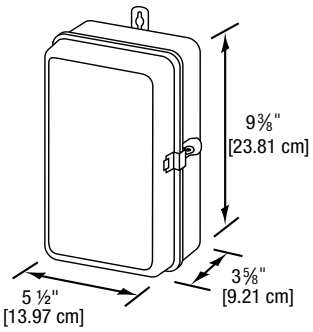

Type 3R Steel

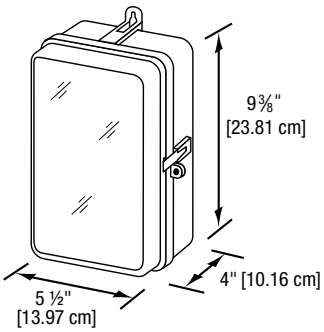

Type 3R Plastic

Project:

Location:

Product Type:

Contact/Phone:

Model #:

T100 Series

The T100 Series Mechanical Time Switches are heavy-duty switches that have the highest horsepower ratings in the industry for industrial, commercial and residential applications.

Features

- Provides direct 24-Hour control of most loads
- Control electrical loads up to 40 Amps
- 1 to 12 ON/OFF operations each day
- Minimum ON/OFF times of 1 hour
- Manual override
- All models equipped with one ON and one OFF tripper

Ratings

Enclosure Type:	See table
Knockouts:	Combination ½"- ¾" nominal knockouts, one on back and on each side, and two on bottom
Switch Type:	See table
Switch Rating:	Each Pole 40 Amp Resistive, 120-480 VAC 40 Amp Tungsten, Inductive or 1000 VA Pilot Duty, 120-277 VAC 2 HP (24 FLA) 120 VAC 5 HP (28 FLA) 240 VAC single-phase
Power Input:	3 W Maximum
Operating Temperature:	-40°F to 130°F (-40°C to 54°C)
Shipping Weight:	Type 1 - 3 lbs. (1.4 kg) Type 3R - 4 lbs. (1.8 kg)
Warranty:	Limited 1 year

T101R

T104PCD82

T101

Model with Type 1 Steel Enclosure	Model with Type 3R Steel Enclosure	Model with Type 3R Plastic Enclosure	Model with Plastic Type 3R Enclosure with See Through Cover	Switch Type	Clock Motor Volts	Hz	Amps/ Pole	HP Rating
T101	**T101R**	**T101P**	**T101PCD82**	SPST	125	60	40	2
T102	**T102R**	**T102P**	**-**	SPST	208-277	60	40	5
T103	**T103R**	**T103P**	**T103PCD82**	DPST	125	60	40	2
T104	**T104R**	**T104P**	**T104PCD82**	DPST	208-277	60	40	5
T104-50	**-**	-	-	DPST	208-277	50	40	5
T101B**	**-**	-	-	SPST	125	60	40	2
T105	**-**	-	-	1NO/1NC*	125	60	40	2
N/A	**T106R**	-	-	1NO/1NC*	208-277	60	40	5

*Can be wired SPDT
**Separate Clock Motor Terminals

T100 Series

Specification

The time switch shall be of the 24-Hour dial type, capable of permitting up to 12 ON/OFF operations each day. The time switch shall provide a minimum ON/OFF time of 1 hour. The time switch shall be powered by _____ (125)(208-277) VAC,_____ (50)(60) Hz power supply. The time switch motor shall be a synchronous motor, which shall be designed to withstand a minimum of 6000 volt transients. The time switch motor shall be connected to the supply terminals with ring-type connectors and shall not require more than 3 Watts to operate the time switch. The time switch mechanism shall be a snap-in design to provide ease of mechanism removal from the enclosure. The time switch enclosure shall be a _____(Type 1 steel)(Type 3R steel)(Type 3R plastic with see through cover) lockable enclosure. The time switch enclosure shall provide a minimum of 31 cubic inches of wiring space and provide a non-removable cover, which shall swing open a full 180 degrees. The time switch shall provide clear terminal identification on a see-through non-curling terminal insulator. A visual indicator shall be provided in the time switch for inspecting clock motor operation. The time switch contact blades shall be a one piece design with welded silver alloy contacts and shall be designed to provide wiping action on contacts during operation to ensure reliable load switching. Terminal connections shall be made using teeter-type terminal screws to provide secure connections for wire sizes up to #8 AWG. Switch configuration shall be _____ (SPST)(DPST) (1NO/1NC) with a switch rating each pole:

- 40 Amp Resistive, 120-480 VAC
- 40 Amp Tungsten, Inductive or 1000 VA Pilot Duty each pole, 120-277 VAC
- 2 HP (24 FLA), 120 VAC
- 5 HP (28 FLA), 240 VAC

The time switch shall be Agency Listed under Clock Operated Switches and shall be Intermatic model _____ (See Model Numbers Listed).

Diagrams

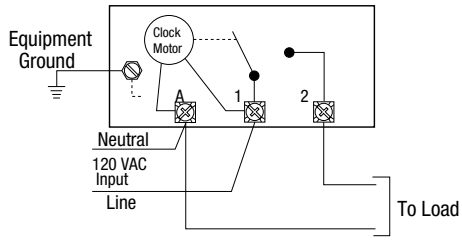

Model T101 SPST

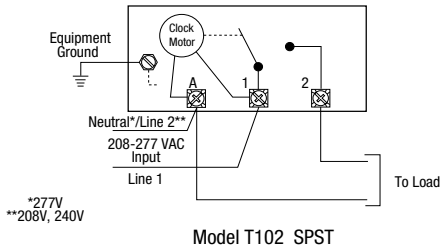

Model T102 SPST

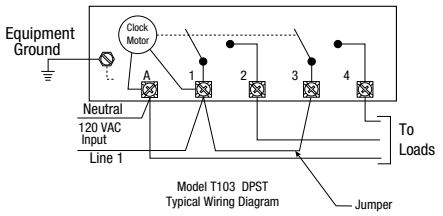

Model T103 DPST
Typical Wiring Diagram

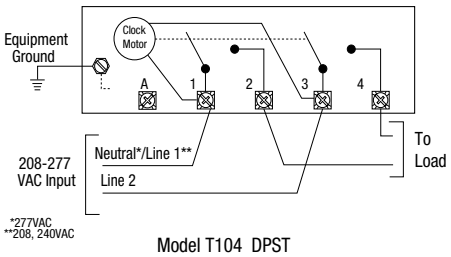

Model T104 DPST

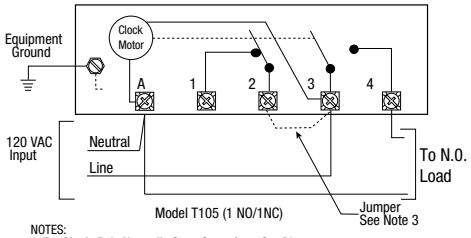

Model T105 (1 NO/1NC)

NOTES:
1. **For Single Pole Normally Open Operation** - See Diagram
2. **For Single Pole Normally Closed operation** - move motor lead from Terminal 3 to Terminal 2. Connect LINE to Terminal 2 and LOAD to Terminal 1.
3. **For Single Pole Double Throw operation** - install JUMPER between Terminals 2 and 3; Connect LINE to Terminal 2; N.O. LOAD to Terminal 4 and N.C. LOAD to Terminal 1. Connect COMMON to Terminal A.

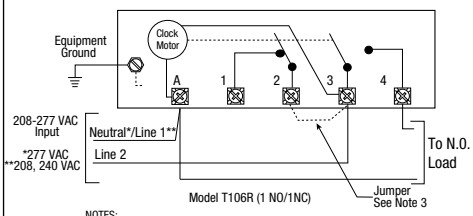

Model T106R (1 NO/1NC)

NOTES:
1. **For Single Pole Normally Open Operation** - See Diagram
2. **For Single Pole Normally Closed operation** - move motor lead from Terminal 3 to Terminal 2. Connect LINE to Terminal 2 and LOAD to Terminal 1.
3. **For Single Pole Double Throw operation** - install JUMPER between Terminals 2 and 3; Connect LINE to Terminal 2; N.O. LOAD to Terminal 4 and N.C. LOAD to Terminal 1. Connect COMMON to Terminal A.

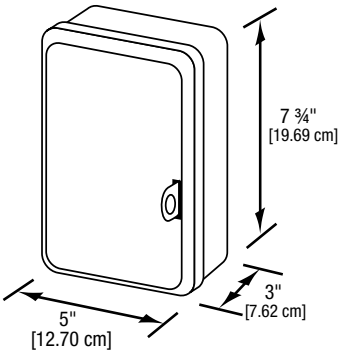

Type 1 Steel

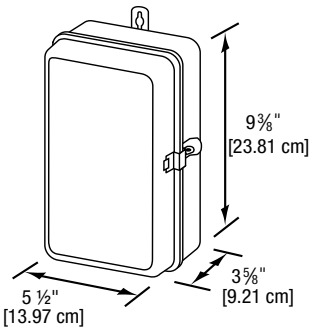

Type 3R Steel

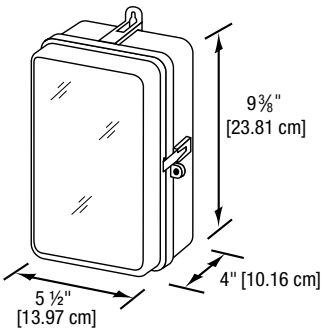

Type 3R Plastic