VERSAMATE® SERIES • PLUGS AND RECEPTACLES
30 AMP NEMA 4X METALLIC

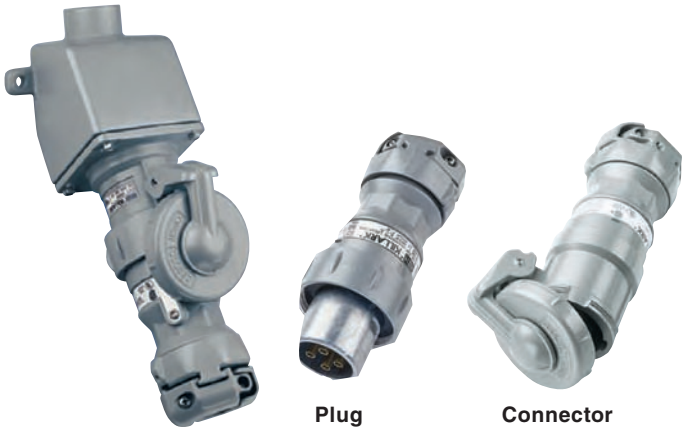
Plug Connector

- **30 Amp 600VAC/250VDC; 50-400 Hertz NEMA 3, 4, 4X①**
- **PLUGS ONLY②:**
  Class I, Div. 1 & 2, Groups B,C,D; NEMA 7 B,C,D
  Class I, Zones 1 & 2, IIB+H_2, IIA
  Class II, Div. 1 & 2, Groups F & G; NEMA 9 F,G; Class III

Wire Range

Regular Stranding: #10 - #6

Extra flex: #10 - #8

File No. E10757 Certified File No. LR111846

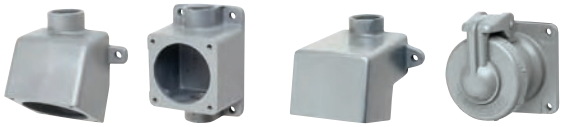
E C D Receptacle

FEATURES-SPECIFICATIONS

30 AMP PLUGS & CONNECTORS

GROUND STYLE	CIRCUIT	GROMMET RANGE	CATALOG NUMBER	
			PLUG	CONNECTOR
Style I	2W2P	.55 - 1.20 IN	VP3275	VPR3255
	3W3P	.55 - 1.20 IN	VP3375	VPR3355
	4W4P	.55 - 1.20 IN	VP3475	VPR3455
Style II	2W3P	.55 - 1.20 IN	VP3385	VPR3365
	3W4P	.55 - 1.20 IN	VP3485	VPR3465

MODIFICATIONS*

CATALOG NUMBER	DESCRIPTION
S39	Reverse service for receptacles, plugs & connectors
S37	Polarization for receptacles, plugs & connectors

*See page PR5 for more information on these options.

30 AMP RECEPTACLES & BACK BOXES

GROUND STYLE	CIRCUIT	CATALOG NUMBER			
		E③ TYPE	C③ TYPE	D③ TYPE	RECEPTACLE ONLY
Style I	2W2P	VR321E**2**	VR321C**2**	VR321D**2**	VR321
	3W3P	VR331E**2**	VR331C**2**	VR331D**2**	VR331
	4W4P	VR341E**2**	VR341C**2**	VR341D**2**	VR341
Style II	2W3P	VR332E**2**	VR332C**2**	VR332D**2**	VR332
	3W4P	VR342E**2**	VR342C**2**	VR342D**2**	VR342
Splice box only③		VRE**23**	VRC**23**	VRD**23**	–

*③ 30 Amp Back Boxes are available in 1/2", 3/4" and 1" conduit sizes. Size listed for 3/4". For other available sizes, change the BOLD "**2**" in either the assembly or box only number to: **1** =1/2", **2** =3/4", **3** =1". Assembly catalog numbers are listed for ease of ordering or specification and devices are shipped as components.*

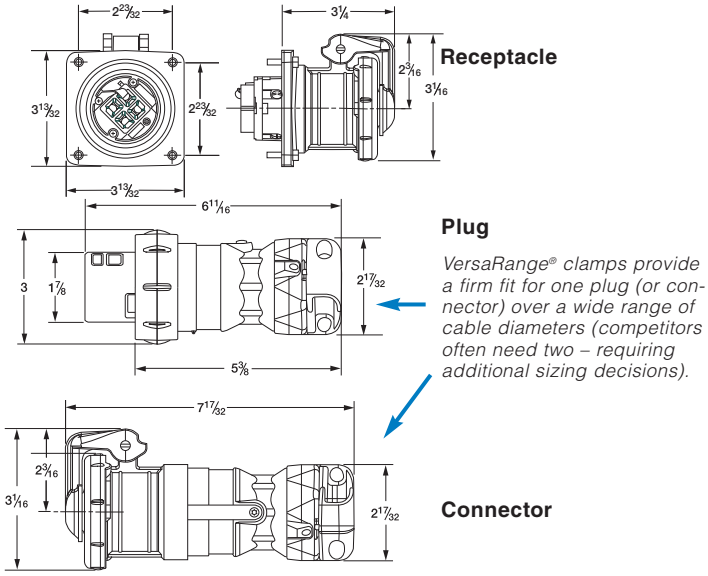

VersaRange® clamps provide a firm fit for one plug (or connector) over a wide range of cable diameters (competitors often need two – requiring additional sizing decisions).

Back Box Dimensions

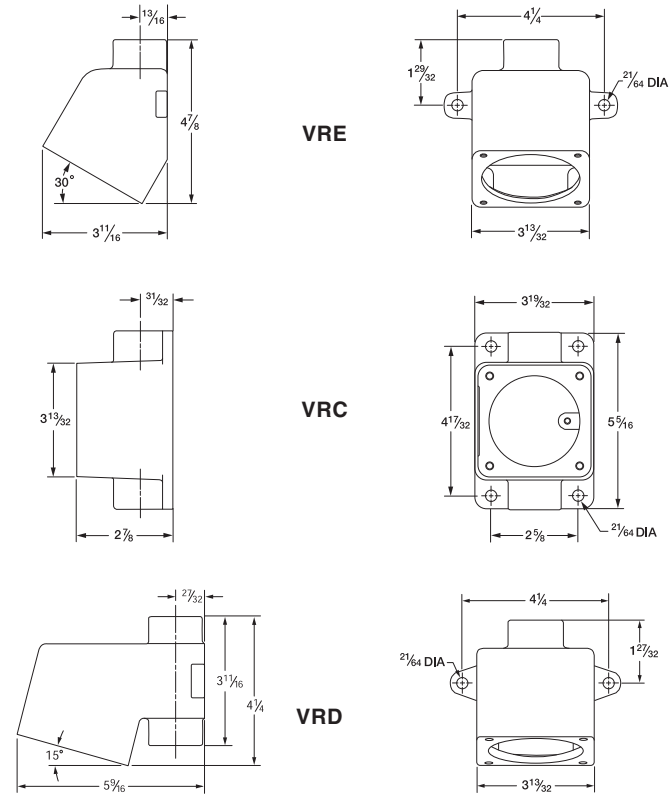

① *Components are intermateable & UL classified with other UL1686 configured devices (when installed in accordance with instructions furnished with device). Assemblies containing components from other manufacturers would have the NEMA type rating of the lowest rated device.*
② *Plugs are hazardous suitable when mated with properly rated receptacles configured to use UL1686 type plugs, such as VersaMate VSQ/VBQ.*
– Note, 2, 3 & 4 pole device dimensions are the same.

HUBBELL®
KILLARK®

VERSAMATE® SERIES • PLUGS AND RECEPTACLES
30 AMP NEMA 4X METALLIC

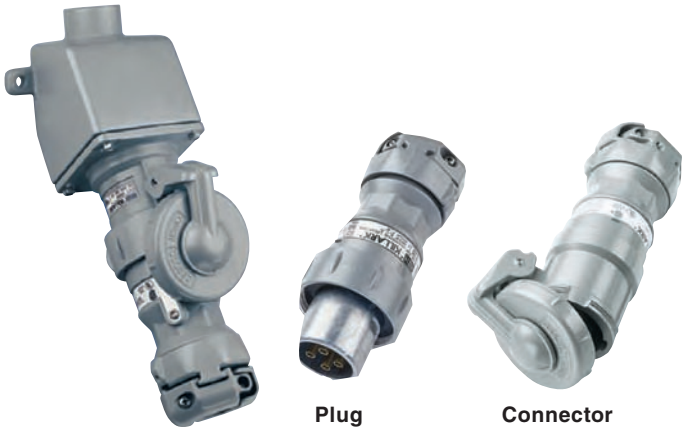
Plug Connector

- **30 Amp 600VAC/250VDC; 50-400 Hertz NEMA 3, 4, 4X①**
- **PLUGS ONLY②:**
  Class I, Div. 1 & 2, Groups B,C,D; NEMA 7 B,C,D
  Class I, Zones 1 & 2, IIB+H_2, IIA
  Class II, Div. 1 & 2, Groups F & G; NEMA 9 F,G; Class III

Wire Range

Regular Stranding: #10 - #6

Extra flex: #10 - #8

File No. E10757 Certified File No. LR111846

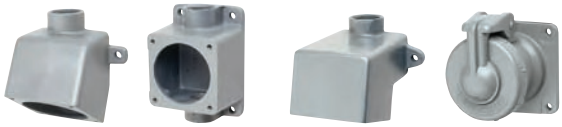
E C D Receptacle

FEATURES-SPECIFICATIONS

30 AMP PLUGS & CONNECTORS

GROUND STYLE	CIRCUIT	GROMMET RANGE	CATALOG NUMBER	
			PLUG	CONNECTOR
Style I	2W2P	.55 - 1.20 IN	VP3275	VPR3255
	3W3P	.55 - 1.20 IN	VP3375	VPR3355
	4W4P	.55 - 1.20 IN	VP3475	VPR3455
Style II	2W3P	.55 - 1.20 IN	VP3385	VPR3365
	3W4P	.55 - 1.20 IN	VP3485	VPR3465

MODIFICATIONS*

CATALOG NUMBER	DESCRIPTION
S39	Reverse service for receptacles, plugs & connectors
S37	Polarization for receptacles, plugs & connectors

*See page PR5 for more information on these options.

30 AMP RECEPTACLES & BACK BOXES

GROUND STYLE	CIRCUIT	CATALOG NUMBER			
		E③ TYPE	C③ TYPE	D③ TYPE	RECEPTACLE ONLY
Style I	2W2P	VR321E**2**	VR321C**2**	VR321D**2**	VR321
	3W3P	VR331E**2**	VR331C**2**	VR331D**2**	VR331
	4W4P	VR341E**2**	VR341C**2**	VR341D**2**	VR341
Style II	2W3P	VR332E**2**	VR332C**2**	VR332D**2**	VR332
	3W4P	VR342E**2**	VR342C**2**	VR342D**2**	VR342
Splice box only③		VRE**23**	VRC**23**	VRD**23**	–

*③ 30 Amp Back Boxes are available in 1/2", 3/4" and 1" conduit sizes. Size listed for 3/4". For other available sizes, change the BOLD "**2**" in either the assembly or box only number to: **1** =1/2", **2** =3/4", **3** =1". Assembly catalog numbers are listed for ease of ordering or specification and devices are shipped as components.*

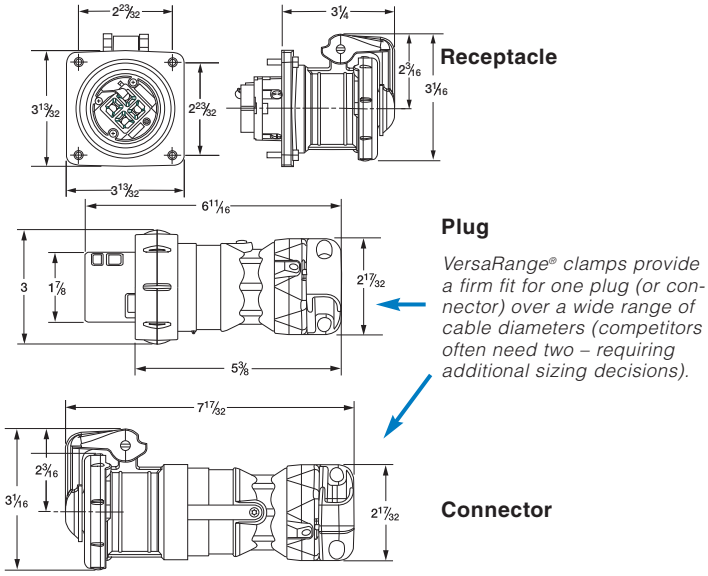

VersaRange® clamps provide a firm fit for one plug (or connector) over a wide range of cable diameters (competitors often need two – requiring additional sizing decisions).

Back Box Dimensions

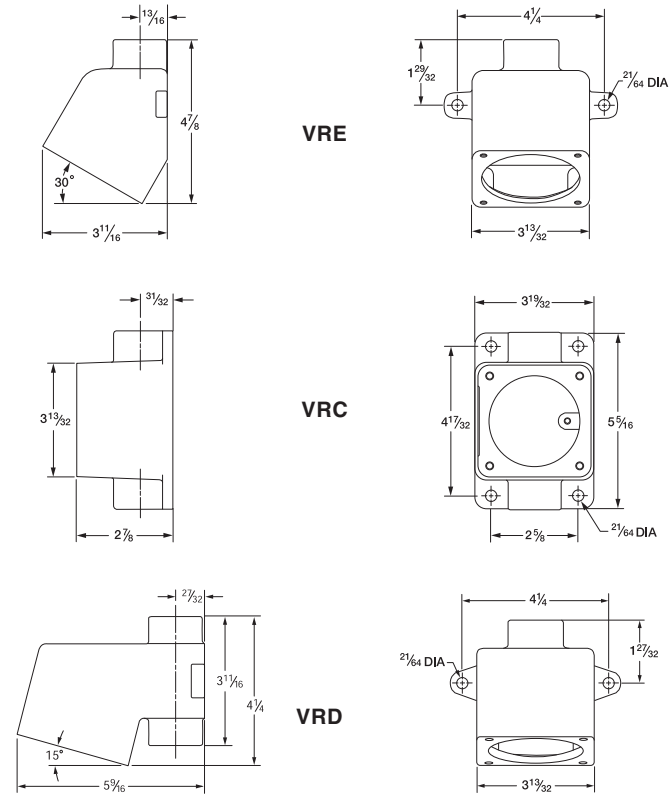

① *Components are intermateable & UL classified with other UL1686 configured devices (when installed in accordance with instructions furnished with device). Assemblies containing components from other manufacturers would have the NEMA type rating of the lowest rated device.*
② *Plugs are hazardous suitable when mated with properly rated receptacles configured to use UL1686 type plugs, such as VersaMate VSQ/VBQ.*
– Note, 2, 3 & 4 pole device dimensions are the same.

HUBBELL®
KILLARK®