Central Steel Fabricators, Inc.
Product Catalog
January 2018 Edition

Table of Contents

Section 1……..…… Ordering Information

Section 2…….....……Auxiliary Framing

Section 3…… Cable Racks

Section 4…….....……Equipment Racks

Section 5……Miscellaneous Hardware

Section 6…….....……..…Insulation & Grounding

Section 7……Miscellaneous Kits

Section 8……..……Configured Solutions

Specifications subject to change. Please contact CSF Customer Service for more information.

© copyright 2004 Central Steel Fabricators, Inc.
http://www.centralsteelfab.com ◆ 2100 Parkes Drive, Broadview, IL 60155
Phone: 708-652-2037 Fax: 708-652-7010

Finish Codes

AD ADC GRAY HENDRY GRAY NEWTON 31 TEXTURED	CB CENTRAL OFFICE BLUE HENDRY +50 NEWTON 64 TEXTURED	DG TELEPHONE GRAY HENDRY NEWTON 30 SMOOTH
PW PUTTY WHITE HENDRY +51 NEWTON 9C TEXTURED	OR FIBER OPTIC ORANGE HENDRY NEWTON 85 SMOOTH	ZY ZINC & YELLOW HENDRY ZG NEWTON 10 TRIVALENT
BL BLACK HENDRY +03 NEWTON 45 TEXTURED		

Notes:
- All Zinc & Yellow plated products are RoHS compliant.
- Other Finishes available upon request.

RVSD*0117

Specifications subject to change. Please contact CSF Customer Service for more information.

© copyright 2004 Central Steel Fabricators, Inc.
http://www.centralsteelfab.com ◆ 2100 Parkes Drive, Broadview, IL 60155
Phone: 708-652-2037 Fax: 708-652-7010

Contents

- AFC2200 Series Aux. Framing Channel
- AFC0200 Series Aux. Framing Channel
- AFA3400 Series Aux. Framing Angle
- AFB2100 Series Aux. Framing Bar
- AFB1100 Series Aux. Framing Bar
- FTA1301 Fasten Top Angle to Aux. Channel
- FTA1401 Fasten Top Angle to Aux. Channel w/ Spacer
- FTA3405 Fasten Top Angle 1” Pipe To Aux. Channel w/ Wall Angle
- FTA34XX Fasten Top Angle To Aux. Framing
- FTA35XX Fasten Top Angle To Aux. Framing w/ 2” Spacer
- SAF570X Support Aux. Framing From UEF BAY
- Secure Top Angle To 1” Pipe
- Secure Top Angle To Aux. Framing
- AFJ2402 Aux. Framing “T” Junction
- AFJ2402C Aux. Framing “X” Junction
- AFJ2502 Aux. Framing Bar “T” Junction [4.00”]
- AFJ2502C Aux. Framing Bar “X” Junction [4.00”]
- AFJ2100 Aux. Channel Clip “T” Junction Kit
- CC22 Aux. Framing Bar “T” Junction Formerly AFJ2401
- Corner Clamp Kits (1-1/2” Kit) & (2” Kit)
- PCBX Power Cable Bracket For Aux. Framing
- APB06K Aux. Power Bracket 6” Assy. Kit
- APB10K Aux. Power Bracket 10” Assy. Kit
- ACB4 Aux. Cable Bracket
- SCRXXXX Support Cable Rack
- SCR51XX Support Cable Rack From Aux. Framing
- Aux. Power Bracket 6” Assembly Kit
- Aux. Power Bracket 10” Assembly Kit
- Support Cable Rack
- Support Cable Rack From Aux. Framing
- Support Top Angle To Aux. Channel 2” x 1”
- Support 2” X 1” Aux. Channel With Threaded Rod
- FAC1501 Fasten Top Angle To 2” X 1” Aux. Channel
- Support Aux. Channel – 2” X 1” With J-Bolt
- Junction 2” X 1” Aux. Channel At Top Angle
- Heavy Rubber End Caps For 1.50” And 2.00” Material
- WSO Wall Sleeve
- Anti-Slip Kit – 1-1/2” And 2” Cable Rack/ Aux. Framing
- Support Aux. Channel – 2” X 1” With Bolt
- CHB11 Ceiling Hanger Bracket Kit
- ACS08K Aux. Channel Splice Kit
- ACS07K Aux. Bar Splice Kit
- Unistrut Splice Kit [4x] Hole Plate
- Aux. Frame Finishing Clip
- Framing, Aux. End Bolt With Spacer 3/8” – 16
- AFS825 Aux. Framing Splice - Earthquake
- Brace Aux. Framing Kits
- Brace Aux. Framing To Columns
- Brace Kit For Aux. Framing Channel and Bar
- Aux. Framing Or Cable Rack Connector
- Clip J – Bolt Kit CJB6201 Cable Rack 1-1/2” To 1-1/2” Framing Bar
- Clip J – Bolt Kit
- CMB2K Conduit Mounting Bracket From Cable Rack
- CMBXXX Conduit Mounting Bracket Assembly
- Mounting Aux. Framing To Wall Angle
- Pipe Stand
- PSE Series Pipe Stand Seismic
- Universal Pipe Stand
- Splice Kit For Aux. Channel – 2” X 1”
- Support Aux. Framing
- Support Aux. Framing At Cross Over Using Threaded Rod
- Splice Aux. Framing
- Fasten Top Angle To Aux. Framing
- Support And Brace Kit For Aux. Framing
- Seismic, Aux. Channel Bracing Kit
- Bracing Kit With AFA3403
- Aux. Framing Bar Junction
- SJB640XC Spanner J – Bolt Kit Cable rack – 1-1/2” Or 2” To Framing Bar
- SPT62XX Series Split Tube
- Insulation mounting kit AFC to Bay [5/8” Hardware]
- Clip “J” Bolt Kit–Cable Rack 1-1/2 Or 2” To Framing Bar
- CJB5.5 KIT 1 – CLIP “J” BOLT 5-3/8” [JBC-SW] KIT
- BAF4005 – BRACE AUX. FRAMING KIT 45 DEGREES
- EQP4545DGK – EQ PLATE 4.50” X 4.50” SLOTTED

Specifications subject to change. Please contact CSF Customer Service for more information.

© copyright 2004 Central Steel Fabricators, Inc.

http://www.centralsteelfab.com ◆ 2100 Parkes Drive, Broadview, IL 60155
Phone: 708-652-2037 Fax: 708-652-7010

AFC22XX Series – Auxiliary Framing Channel – 2.00” X .56” X .19” Thickness

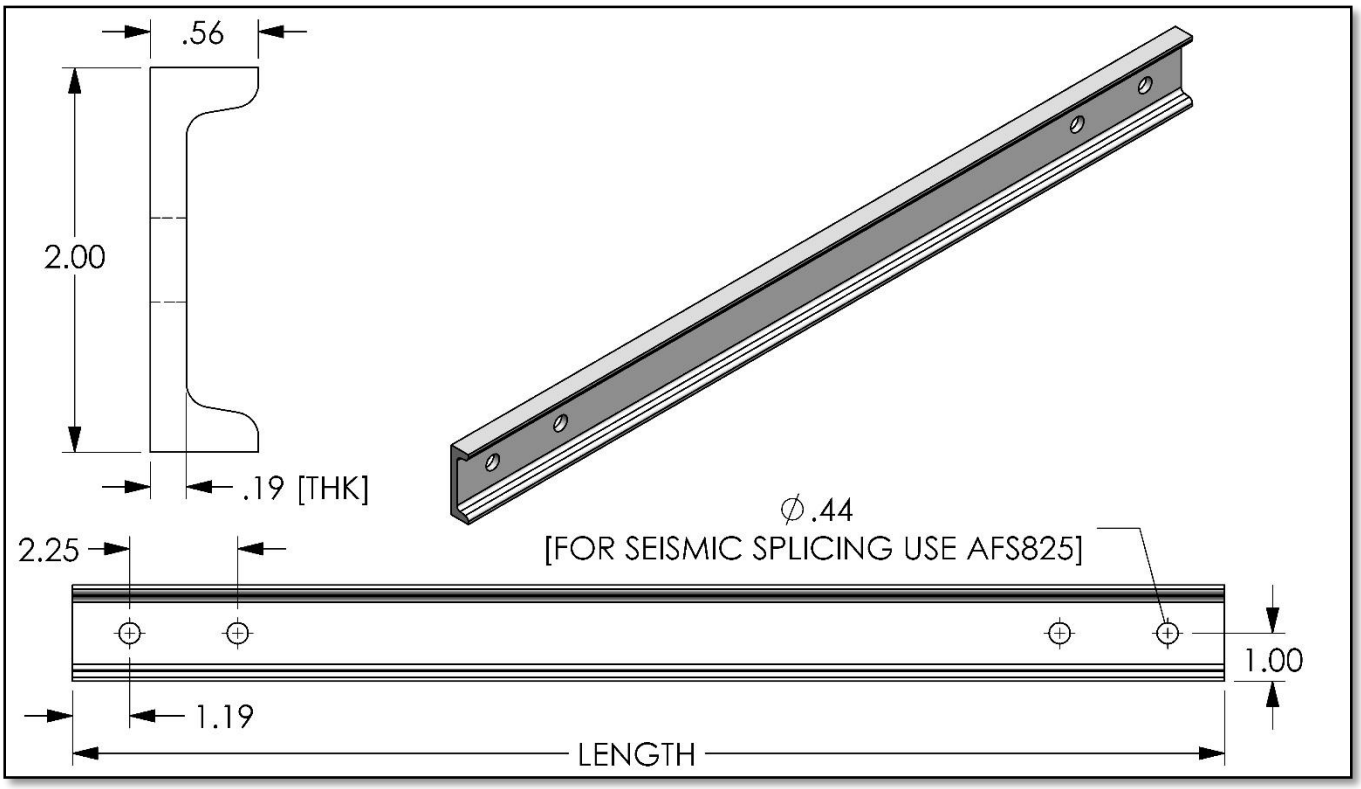

AFC22XX Series – Auxiliary Framing Channel		
CSF#	Length	Description
AFC2201	24.00”	Auxiliary Framing Channel – 2’-0”
AFC2202	48.00”	Auxiliary Framing Channel – 4’-0”
AFC2203	72.00”	Auxiliary Framing Channel – 6’-0”
AFC2204	96.00”	Auxiliary Framing Channel – 8’-0”
AFC2205	120.00”	Auxiliary Framing Channel – 10’-0”
AFC2206	144.00”	Auxiliary Framing Channel – 12’-0”
AFC2207	168.00”	Auxiliary Framing Channel – 14’-0”
AFC2208	192.00”	Auxiliary Framing Channel – 16’-0”
AFC2209	216.00”	Auxiliary Framing Channel – 18’-0”
AFC2210	240.00”	Auxiliary Framing Channel – 20’-0”

NOTES:

- This product color defaults to DG, other colors available upon request.
- See color chart
- For Seismic Splice use AFS825

RVSD*0116

Specifications subject to change. Please contact CSF Customer Service for more information.

© copyright 2004 Central Steel Fabricators, Inc.
http://www.centralsteelfab.com ◆ 2100 Parkes Drive, Broadview, IL 60155
Phone: 708-652-2037 Fax: 708-652-7010

AFC02XX SERIES - AUXILIARY FRAMING CHANNEL – 2.00" X 1.00" X [.19” THK]

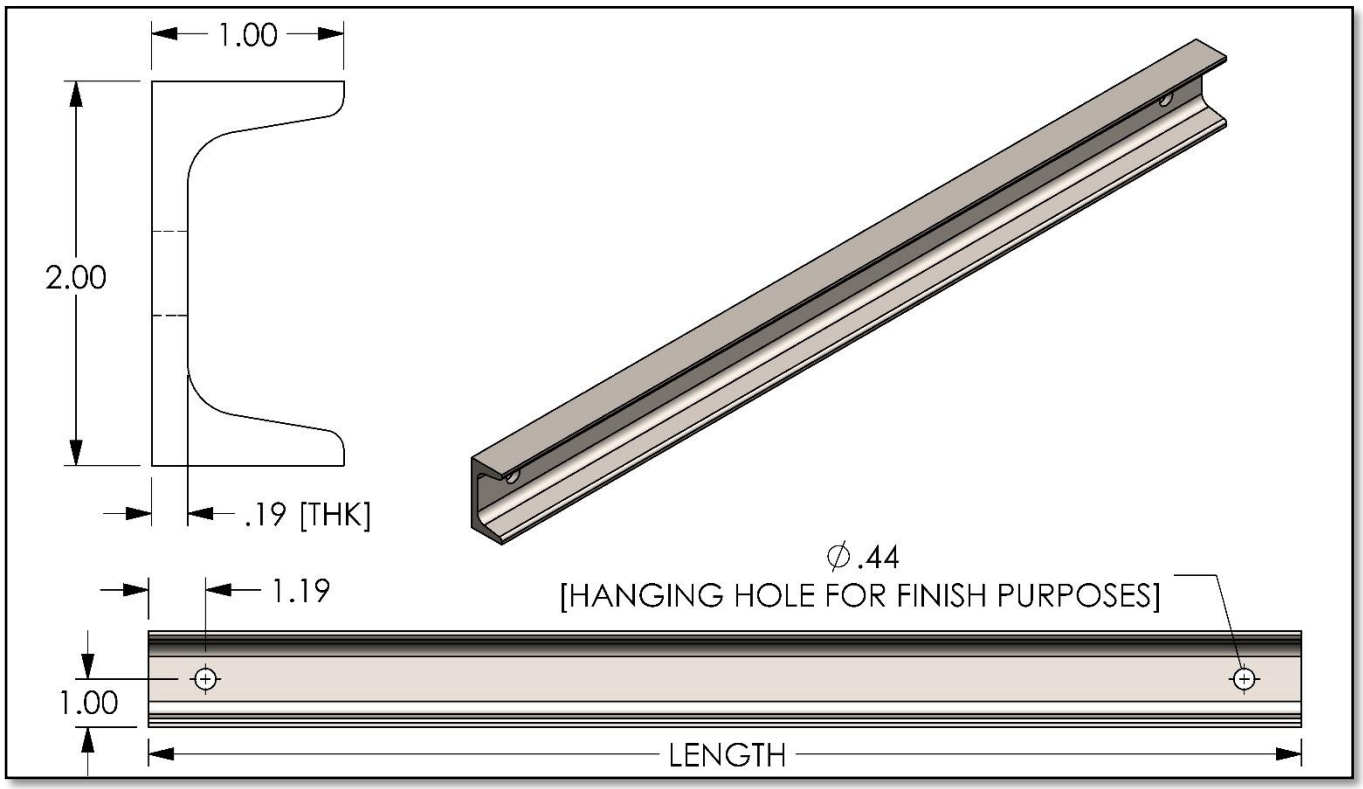

AFC02XX SERIES – AUXILIARY FRAMING CHANNEL		
CSF#	LENGTH	DESCRIPTION
AFC0201	24.00”	AUXILIARY FRAMING CHANNEL – 2’-0” – [1X] HANGING HOLE
AFC0202	48.00”	AUXILIARY FRAMING CHANNEL – 4’-0” – [1X] HANGING HOLE
AFC0203	72.00”	AUXILIARY FRAMING CHANNEL – 6’-0” – [2X] HANGING HOLES
AFC0205	120.00”	AUXILIARY FRAMING CHANNEL – 10’-0” – [2X] HANGING HOLES

NOTES:

- THIS PRODUCT COLOR DEFAULTS TO DG, OTHER COLORS AVAILABLE UPON REQUEST. SEE COLOR CHART
- OTHER LENGTHS AVAILABLE UPON REQUEST.

- HANGING HOLE FOR FINISH PURPOSES

RVSD*0116

Specifications subject to change. Please contact CSF Customer Service for more information.

© copyright 2004 Central Steel Fabricators, Inc.
http://www.centralsteelfab.com ◆ 2100 Parkes Drive, Broadview, IL 60155
Phone: 708-652-2037 Fax: 708-652-7010

Auxiliary Framing Bar – AFB21XX Series - 2.00” X 3/8” Thickness

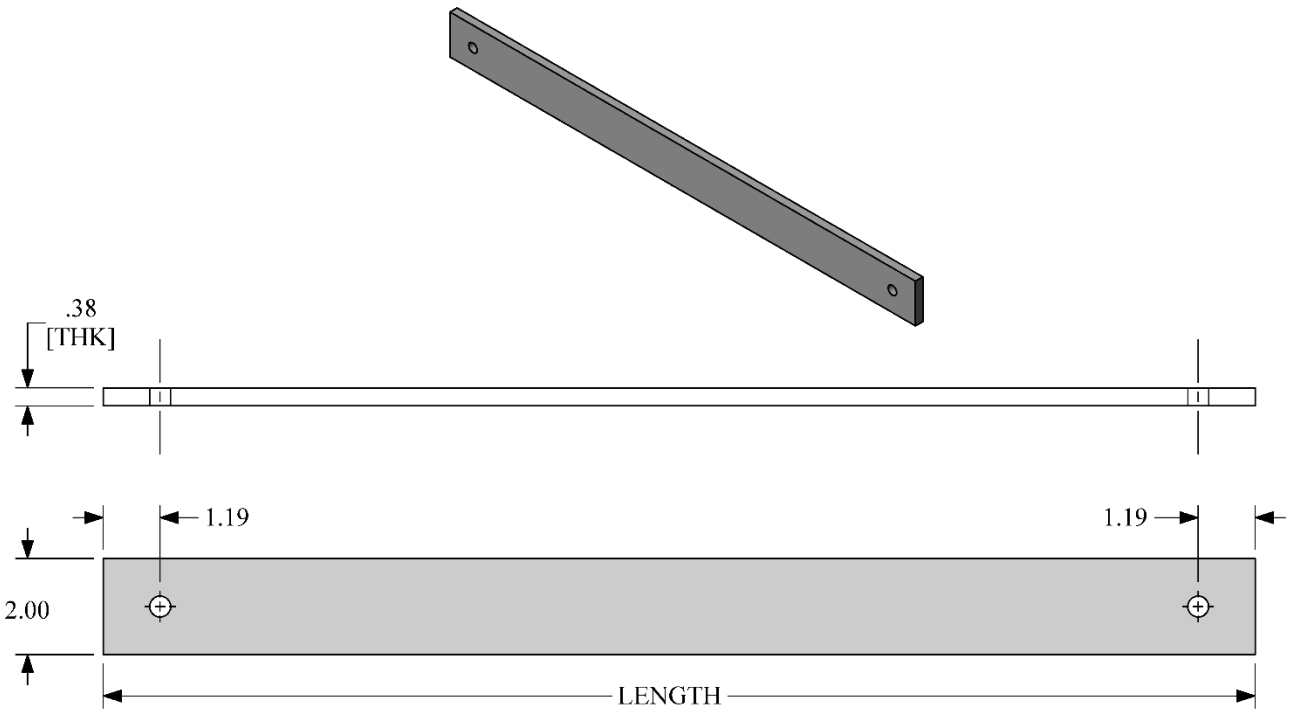

AFB21XX Series – Auxiliary Framing Bar		
CSF#	Length	Description
AFB2101	24.00”	Auxiliary Framing Bar - 2’-0” - [1x] Hanging Hole
AFB2102	48.00”	Auxiliary Framing Bar - 4’-0” - [1x] Hanging Hole
AFB2103	72.00”	Auxiliary Framing Bar - 6’-0” - [2x] Hanging Hole
AFB2104	96.00”	Auxiliary Framing Bar - 8’-0” - [2X] Hanging Hole
AFB2105	120.00”	Auxiliary Framing Bar - 10’-0” - [2x] Hanging Hole
AFB2106	144.00”	Auxiliary Framing Bar - 12’-0” - [2X] Hanging Hole
AFB2107	168.00”	Auxiliary Framing Bar - 14’-0” - [2X] Hanging Hole
AFB2108	192.00”	Auxiliary Framing Bar - 16’-0” - [2X] Hanging Hole
AFB2109	216.00”	Auxiliary Framing Bar - 18’-0” - [2X] Hanging Hole
AFB2110	240.00”	Auxiliary Framing Bar - 20’-0” - [2X] Hanging Hole

Notes:

- These product color defaults to DG, other colors available upon request. See color chart
- Auxiliary Framing Bar may have holes for manufacturing purpose.

RVSD*0117

Specifications subject to change. Please contact CSF Customer Service for more information.

© copyright 2004 Central Steel Fabricators, Inc.
http://www.centralsteelfab.com ◆ 2100 Parkes Drive, Broadview, IL 60155
Phone: 708-652-2037 Fax: 708-652-7010

AUXILIARY FRAMING ANGLE – 2.00" X 2.00" X [1/4“THK]

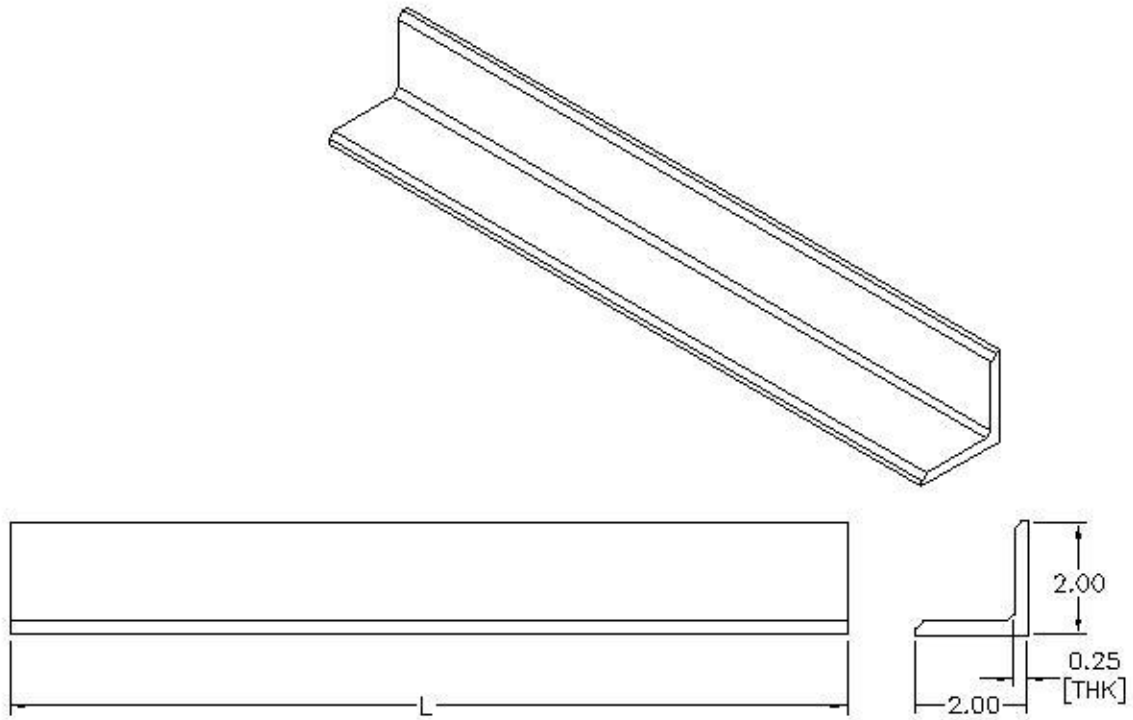

CSF#	"L" LENGTH
AFA3401	2‘-0”
AFA3402	4‘-0”
AFA3403	6‘-0”
AFA3404	8‘-0”
AFA3405	10‘-0”

NOTES:
- FRAMING CHANNEL MAY HAVE HOLES FOR MTG. PURPOSES
-THESE PRODUCT COLOR DEFAULTS TO DG, OTHER COLORS AVAILABLE UPON REQUEST. SEE COLOR CHART -LENGTHS OVER 120.00” AVAILABLE

RVSD*0511

Specifications subject to change. Please contact CSF Customer Service for more information.

© copyright 2004 Central Steel Fabricators, Inc.
http://www.centralsteelfab.com ◆ 2100 Parkes Drive, Broadview, IL 60155
Phone: 708-652-2037 Fax: 708-652-7010

AUXILIARY FRAMING BAR – 1-1/2" X 3/8"

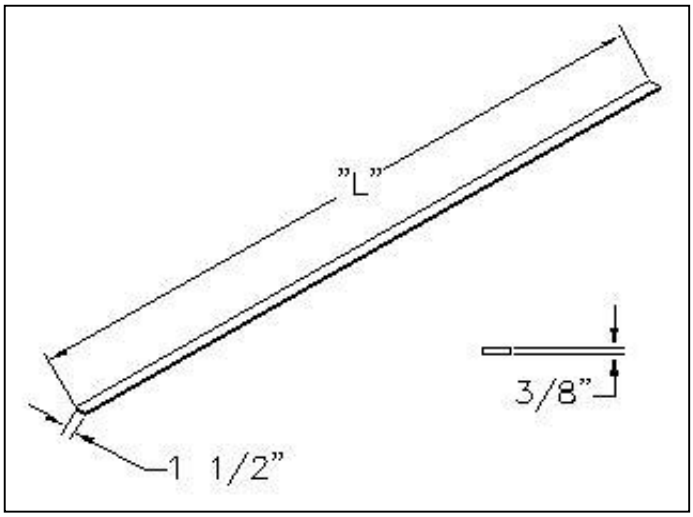

CSF#	"L" LENGTH
AFB1105	10'-0"

NOTES:

-BAR MAY HAVE HOLES FOR MANUFACTURING PROCESS
-THESE PRODUCT COLOR DEFAULTS TO DG, OTHER COLORS AVAILABLE UPON REQUEST. SEE COLOR CHART

RVSD*0311

Specifications subject to change. Please contact CSF Customer Service for more information.

© copyright 2004 Central Steel Fabricators, Inc.
http://www.centralsteelfab.com ◆ 2100 Parkes Drive, Broadview, IL 60155
Phone: 708-652-2037 Fax: 708-652-7010

FTA1301 – Fasten to Top Angle to Auxiliary Framing Channel

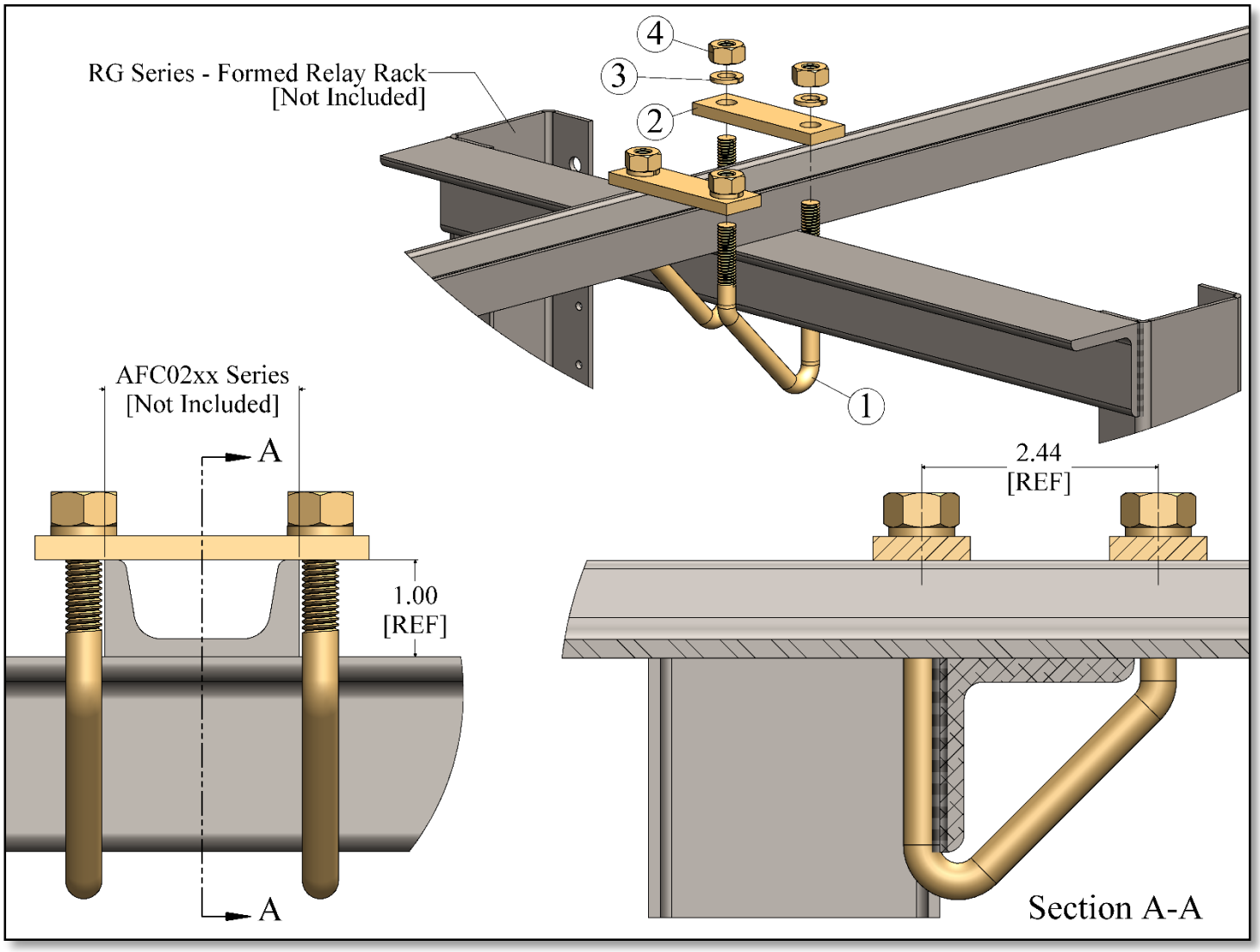

FTA1301 – Fasten to Top Angle to Auxiliary Framing Channel			
ITEM#	CSF#	QTY	Description
1	VB252	2	“V” Bolt – 3/8-16UNC x 4.00” LG. x 1.25” Thread Length
2	THP282	2	Two Hole Plate
3	LW156	4	3/8” Spring Lock Washer
4	HN146	4	3/8-16 – Hex Nut

Notes:

- Finish Code: Zinc and Yellow

RVSD*1117

Specifications subject to change. Please contact CSF Customer Service for more information.
© copyright 2004 Central Steel Fabricators, Inc.
http://www.centralsteelfab.com ◆ 2100 Parkes Drive, Broadview, IL 60155
Phone: 708-652-2037 Fax: 708-652-7010

FTA1401 FASTEN TOP ANGLE TO 2.00" X 1.00" AUX. CHAN. WITH SPACER

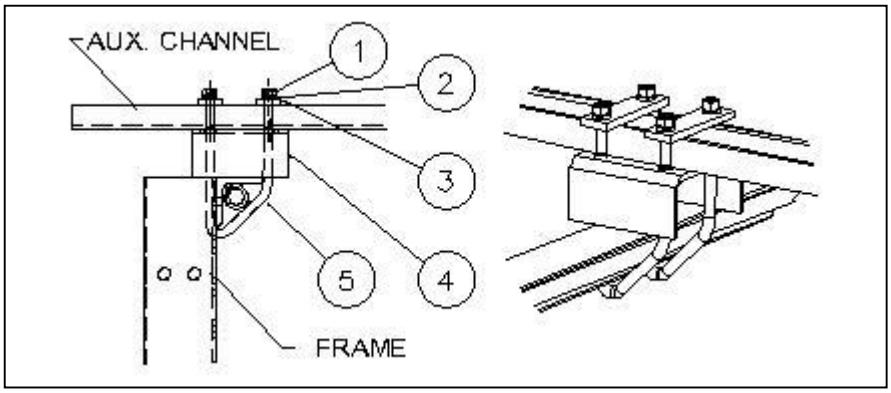

ITEM #	CSF#	QTY
1	HN146	4
2	LW156	4
3	THP282	2
4	A1601	1
5	VB253	2

NOTES:
- FINISH: ZINC AND YELLOW

Specifications subject to change. Please contact CSF Customer Service for more information.
© copyright 2004 Central Steel Fabricators, Inc.
http://www.centralsteelfab.com ◆ 2100 Parkes Drive, Broadview, IL 60155
Phone: 708-652-2037 Fax: 708-652-7010

FASTEN TOP ANGLE – 1.00” PIPE TO AUX. CHANNEL WITH WALL ANGLE

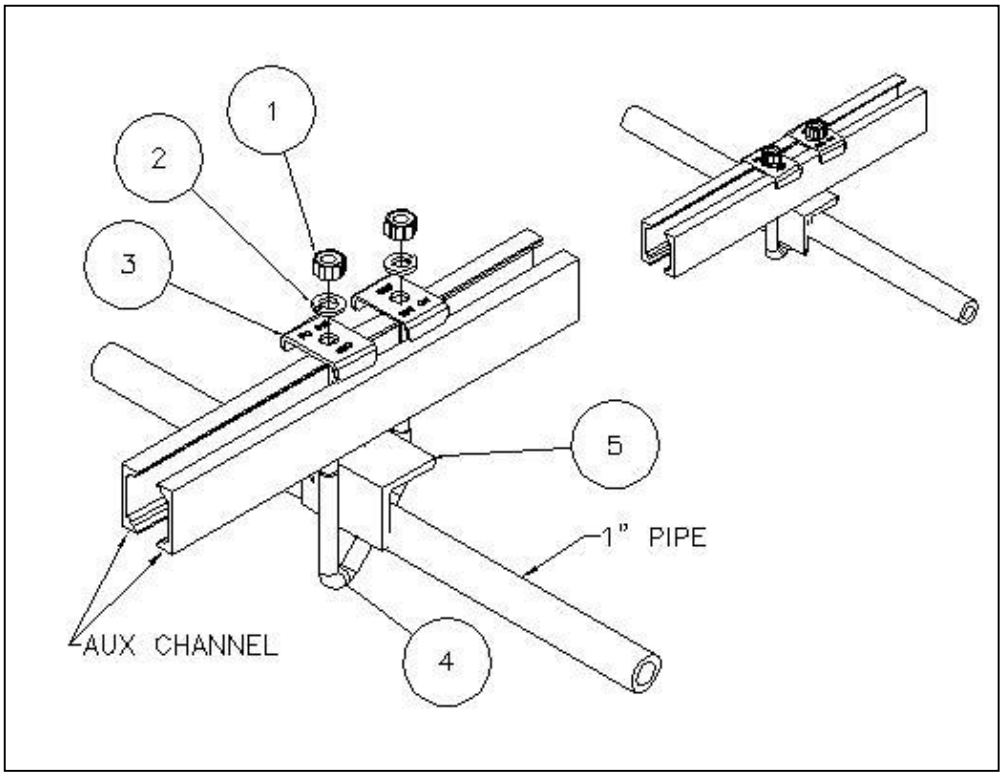

FTA3405		
ITEM #	CSF#	QTY
1	HN147	2
2	LW157	2
3	FC315	2
4	VB254	1
5	WA03	1

NOTES:
-FINISH: SEE TECH DATA FOR PAINT CODES WA03, ALL OTHER PARTS ZINC AND YELLOW
-1.00” PIPE AND AUX CHANNEL NOT INCLUDED

Specifications subject to change. Please contact CSF Customer Service for more information.
© copyright 2004 Central Steel Fabricators, Inc.
http://www.centralsteelfab.com ◆ 2100 Parkes Drive, Broadview, IL 60155
Phone: 708-652-2037 Fax: 708-652-7010

FASTEN TOP ANGLE TO AUXILIARY FRAMING

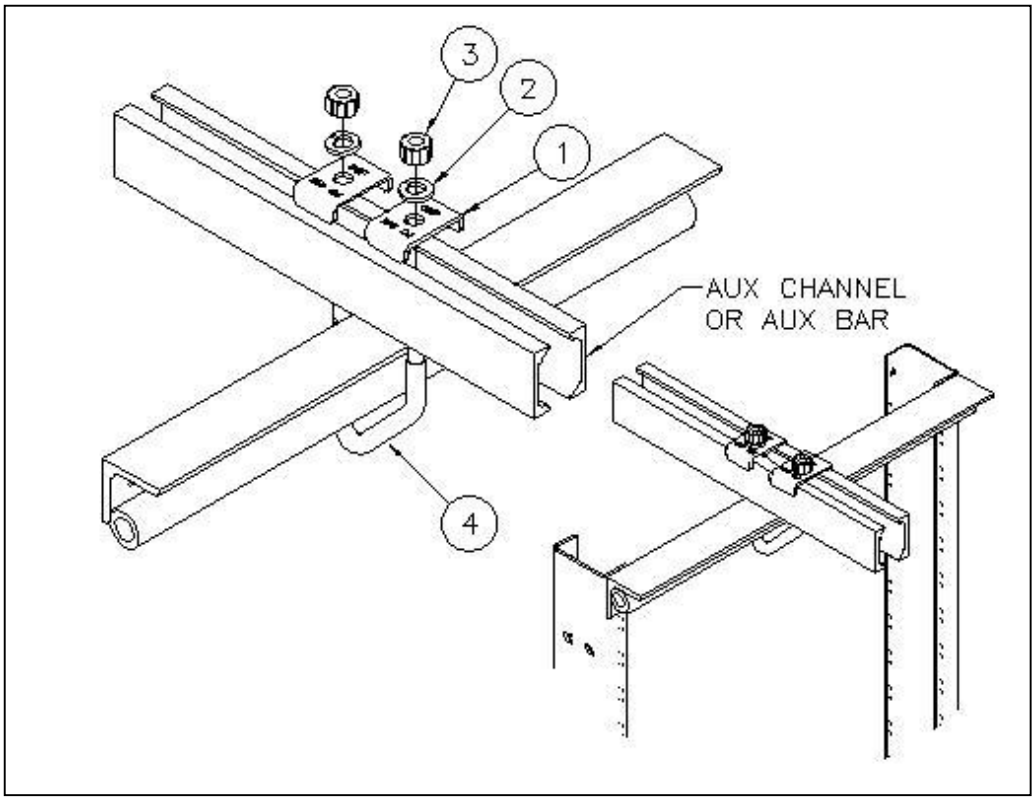

ITEM#	CSF#	FTA3401 (BAR)	FTA3402 (CHNL)
1	FC312	2	0
1	FC315	0	2
2	LW157	2	2
3	HN147	2	2
4	VB254	1	1

NOTES:
- FINISH: ZINC AND YELLOW
- RELAY RACK AND AUX FRAMING NOT INCLUDED

Specifications subject to change. Please contact CSF Customer Service for more information.
© copyright 2004 Central Steel Fabricators, Inc.
http://www.centralsteelfab.com ◆ 2100 Parkes Drive, Broadview, IL 60155
Phone: 708-652-2037 Fax: 708-652-7010

FASTEN TOP ANGLE TO AUXILARY FRAMING WITH 2.00” SPACER

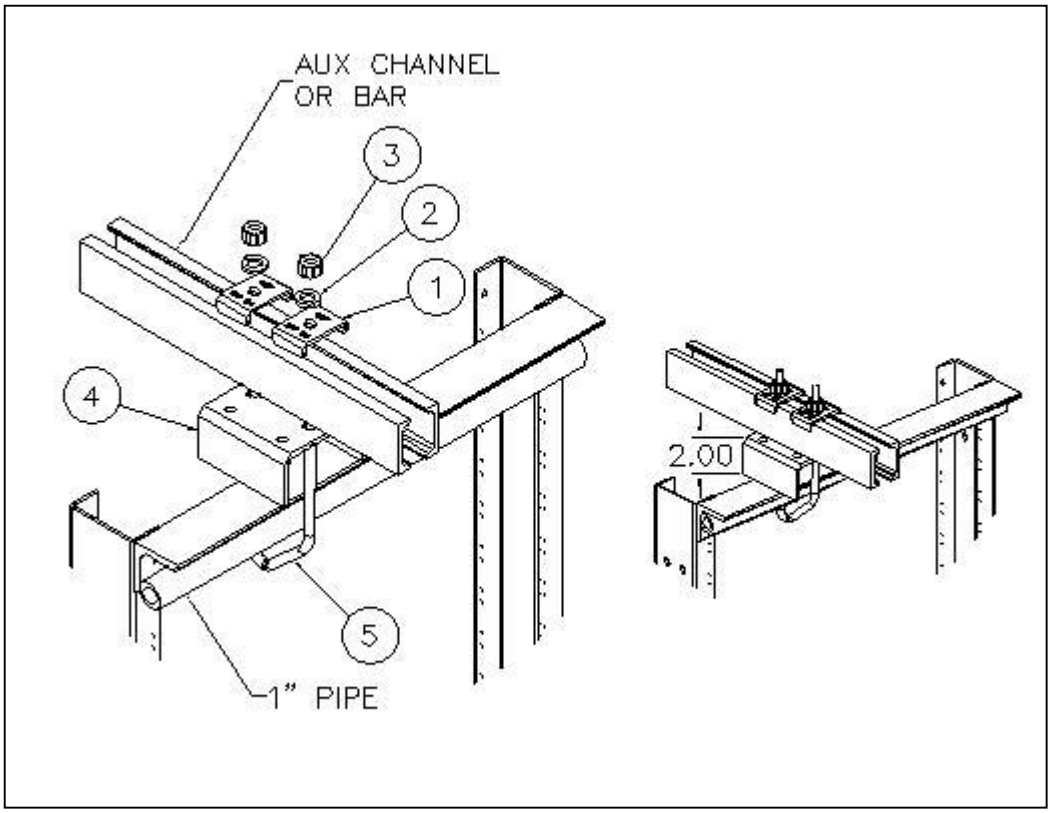

FTA3501 & FTA3502			
ITEM#	CSF#	FTA3501 (BAR)	FTA3502 (CHNL)
1	FC312	2	0
1	FC315	0	2
2	LW157	2	2
3	HN147	2	2
4	A1601	1	1
5	VB255	1	1

NOTES:

- FINISH: SEE TECH DATA FOR PAINT CODES A1601, ALL OTHER PARTS ZINC AND YELLOW
-RELAY RACK, AUX FRAMING, AND 1.00” PIPE NOT INCLUDED

Specifications subject to change. Please contact CSF Customer Service for more information.
© copyright 2004 Central Steel Fabricators, Inc.
http://www.centralsteelfab.com ◆ 2100 Parkes Drive, Broadview, IL 60155
Phone: 708-652-2037 Fax: 708-652-7010

SAF570X SUPPORT AUXILIARY FRAMING FROM UEF BAY

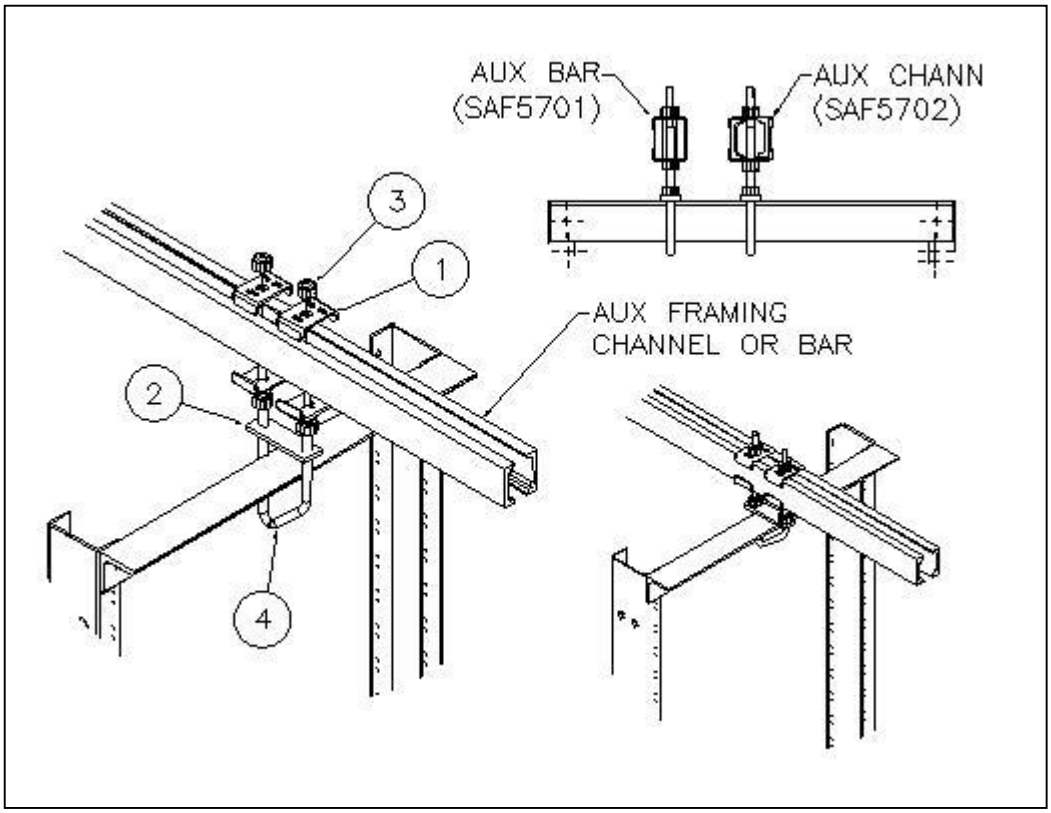

ITEM#	CSF#	SAF5701 (BAR)	SAF5702 (CHNL)
1	FC313	4	0
1	FC316	0	4
2	THP284	1	1
3	HN148	6	6
4	VB256	1	1

NOTES:
- FINISH: ZINC AND YELLOW
-RELAY RACK AND AUX FRAMING NOT INCLUDED

Specifications subject to change. Please contact CSF Customer Service for more information.
© copyright 2004 Central Steel Fabricators, Inc.
http://www.centralsteelfab.com ◆ 2100 Parkes Drive, Broadview, IL 60155
Phone: 708-652-2037 Fax: 708-652-7010

SECURE TOP ANGLE TO 1.00” PIPE

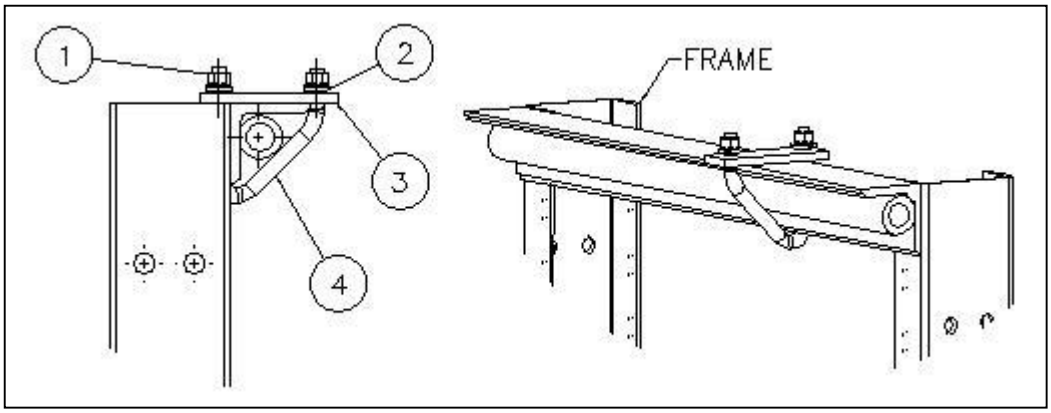

STA1201 & STA1202			
ITEM#	CSF#	STA1201	STA1202
1	HN146	2	2
2	LW156	2	2
3	THP282	1	1
4	VB251(3")	1	0
4	VB252(4")	0	1

NOTES:
- FINISH: ZINC AND YELLOW

RVSD*0612

Specifications subject to change. Please contact CSF Customer Service for more information.

© copyright 2004 Central Steel Fabricators, Inc.
http://www.centralsteelfab.com ◆ 2100 Parkes Drive, Broadview, IL 60155
Phone: 708-652-2037 Fax: 708-652-7010

SECURE TOP ANGLE TO AUXILIARY FRAMING

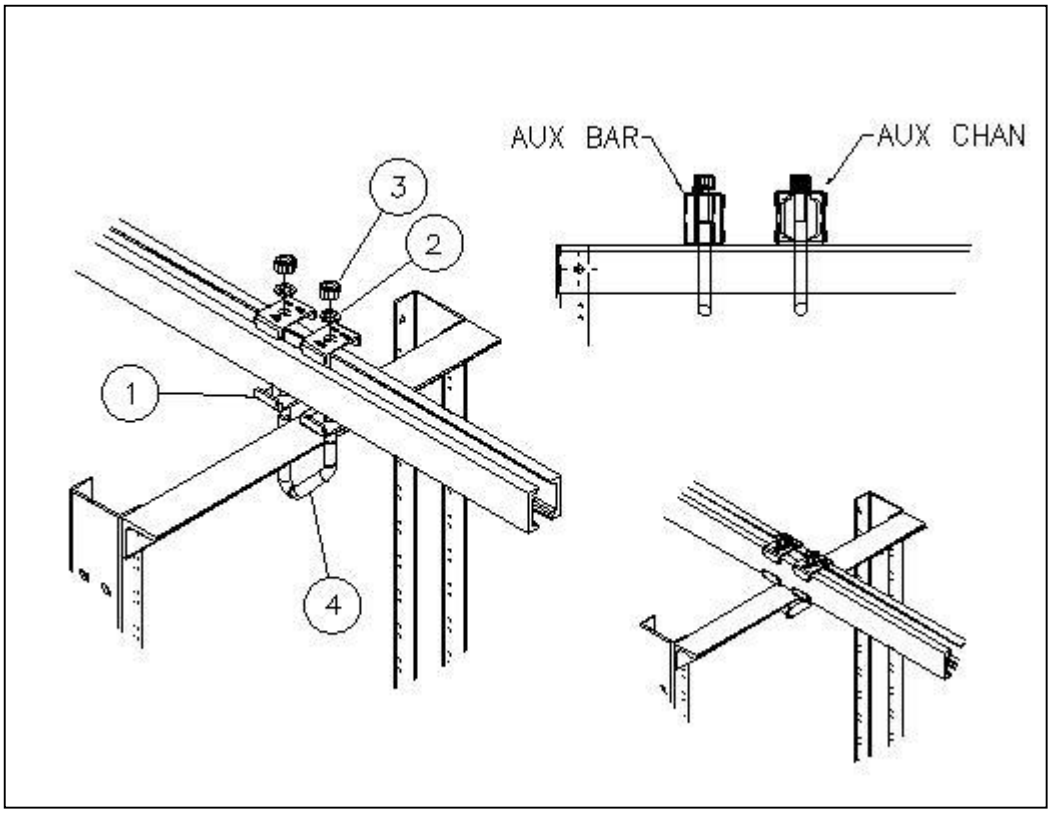

ITEM#	CSF#	STA3601(BAR)	STA3602(CHAN)	STA3702(CHAN)
1	FC312	4	0	0
1	FC315	0	4	2
2	LW157	2	2	2
3	HN147	2	2	2
4	VB254	1	1	1

NOTES:
- FINISH: ZINC AND YELLOW
- RELAY RACK AND AUX FRAMING NOT INCLUDED

Specifications subject to change. Please contact CSF Customer Service for more information.
© copyright 2004 Central Steel Fabricators, Inc.
http://www.centralsteelfab.com ◆ 2100 Parkes Drive, Broadview, IL 60155
Phone: 708-652-2037 Fax: 708-652-7010

AFJ2402 – Auxiliary Framing Channel "T" Junction

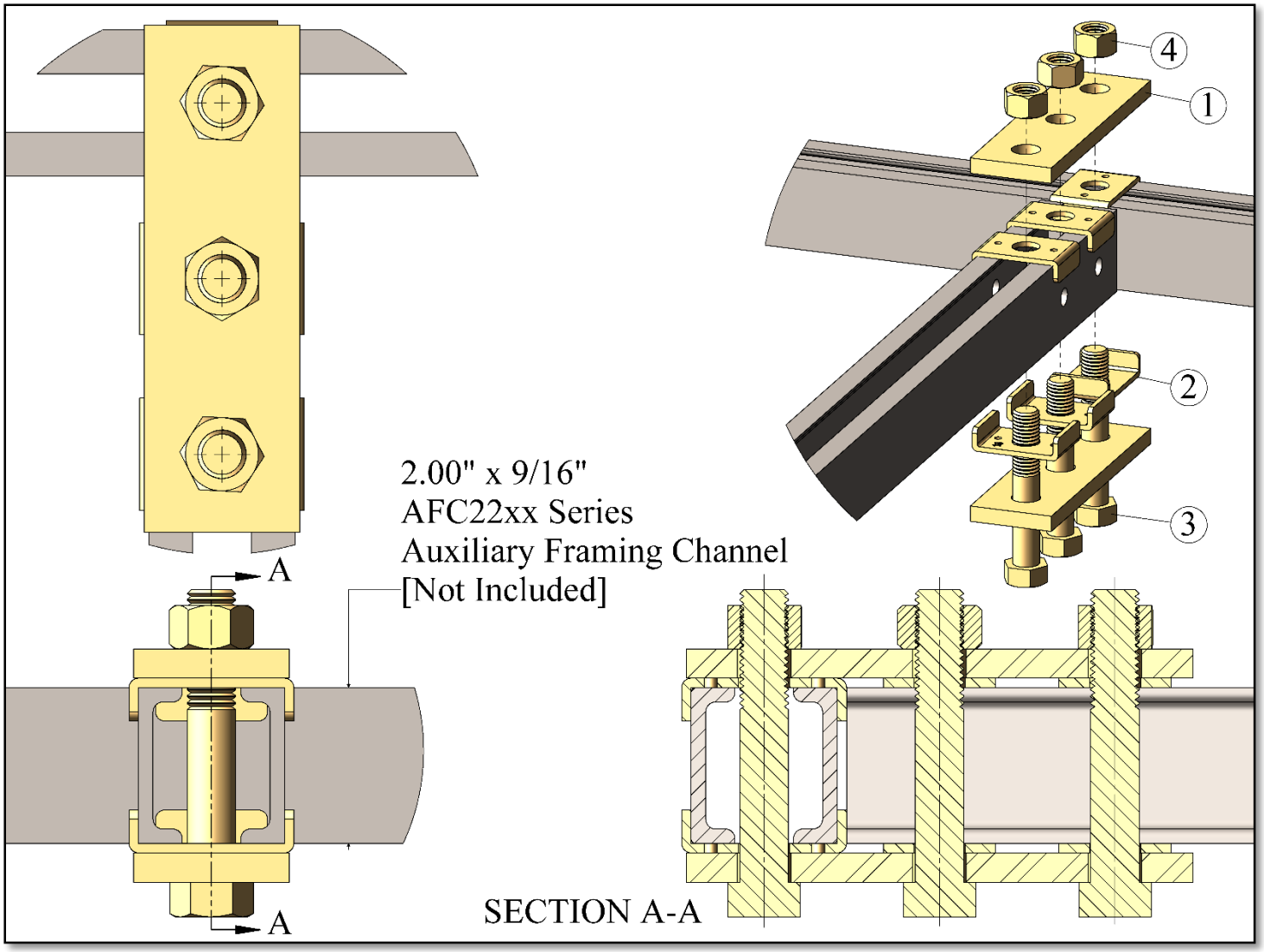

AFJ2402 – Auxiliary Framing Channel "T" Junction			
ITEM#	CSF#	QTY	Description
1	A6179	2	Auxiliary Framing Channel Junction Bracing Bar
2	FC316	6	Framing Clip
3	HH1212	3	5/8-11 HHCS x 3.75" LG.
4	HN148	3	5/8-11-UNC-2B – Hex Nut

Notes:

- Finish: Zinc and Yellow

RVSD*0917

Specifications subject to change. Please contact CSF Customer Service for more information.

© copyright 2004 Central Steel Fabricators, Inc.
http://www.centralsteelfab.com ◆ 2100 Parkes Drive, Broadview, IL 60155
Phone: 708-652-2037 Fax: 708-652-7010

AFJ2402C Auxiliary Framing Channel "X" Junction

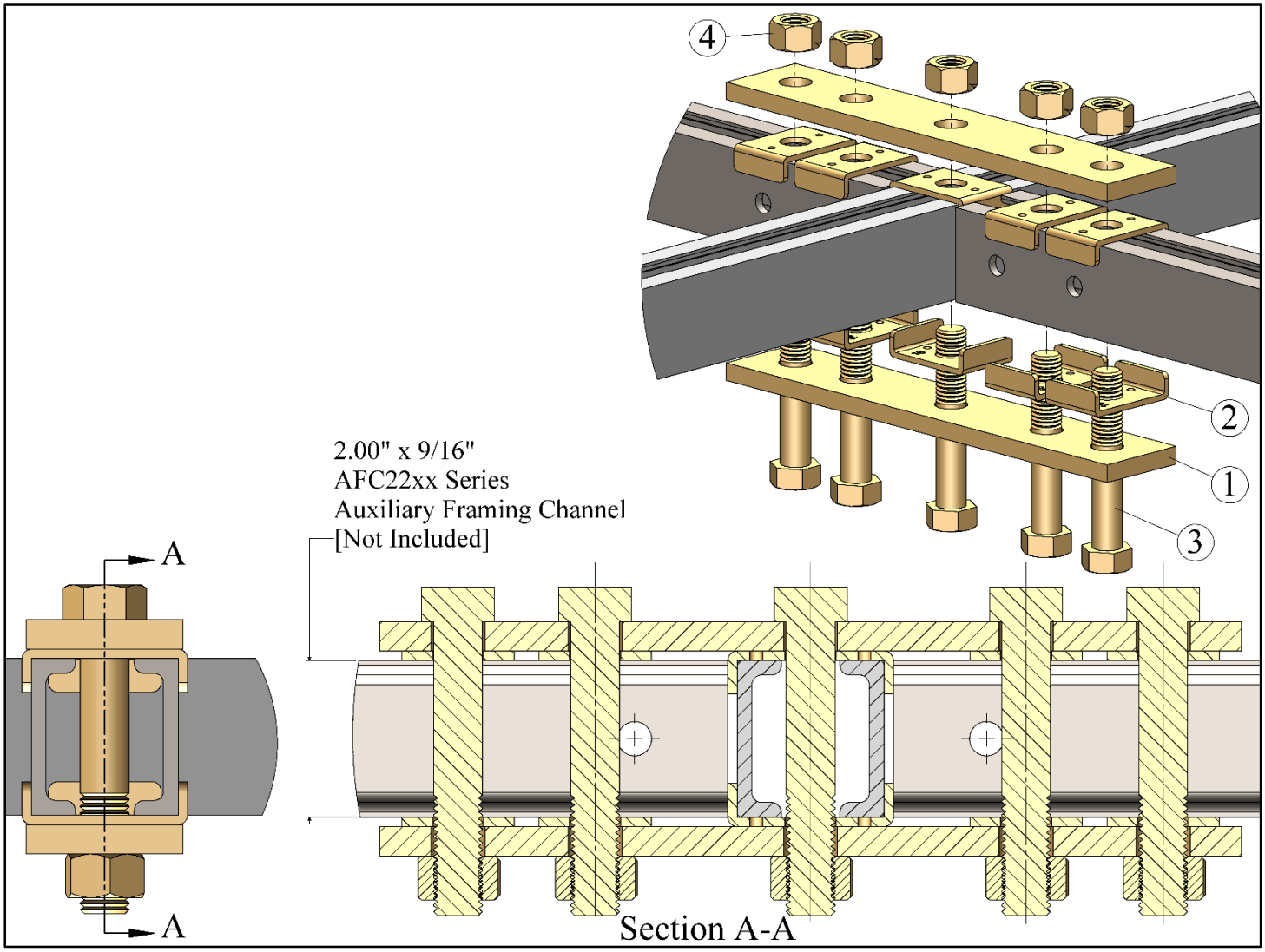

AFJ2402C – Auxiliary Framing Channel "X" Junction			
ITEM#	CSF#	QTY	Description
1	A8956	2	Auxiliary Framing Channel Junction Bracing Bar
2	FC316	10	Framing Clip
3	HH1212	5	5/8-11 HHCS x 3.75" LG.
4	HN148	5	5/8-11-UNC-2B – Hex Nut

Notes:

- Finish: Zinc and Yellow

RVSD*0917

Specifications subject to change. Please contact CSF Customer Service for more information.

© copyright 2004 Central Steel Fabricators, Inc.
http://www.centralsteelfab.com ◆ 2100 Parkes Drive, Broadview, IL 60155
Phone: 708-652-2037 Fax: 708-652-7010

AFJ2502 Auxiliary Framing Bar "T" Junction [4.00" Aux. Framing Bar]

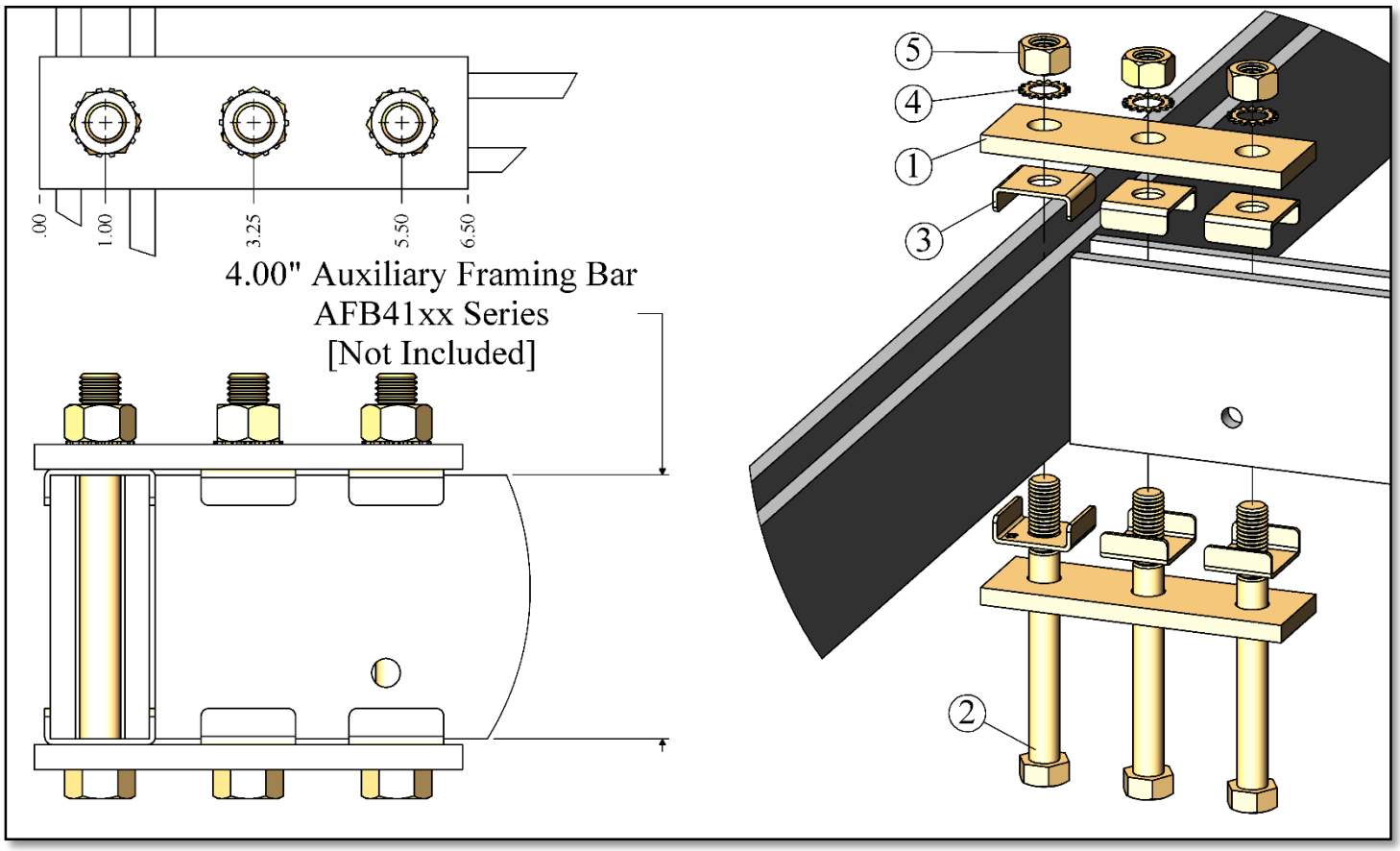

AFJ2502 – Auxiliary Framing Bar "T" Junction [4.00" Aux. Framing Bar – Not Included]			
Item#	CSF#	QTY	Description
1	A6179	2	Auxiliary Framing Bracing Bar
2	HH1217	3	5/8-11 HHCS x 6.00" LG.
3	FC313	6	Framing Clip
4	LWE158	3	5/8" External Tooth Lock Washer
5	HN148	3	5/8-11-UNC-2B – Hex Nut

Notes:

- Finish Code: Zinc and Yellow

RVSD*1017

Specifications subject to change. Please contact CSF Customer Service for more information.

© copyright 2004 Central Steel Fabricators, Inc.
http://www.centralsteelfab.com ◆ 2100 Parkes Drive, Broadview, IL 60155
Phone: 708-652-2037 Fax: 708-652-7010

AFJ2502C – Auxiliary Framing Bar "X" Junction [4.00" Aux. Framing Bar]

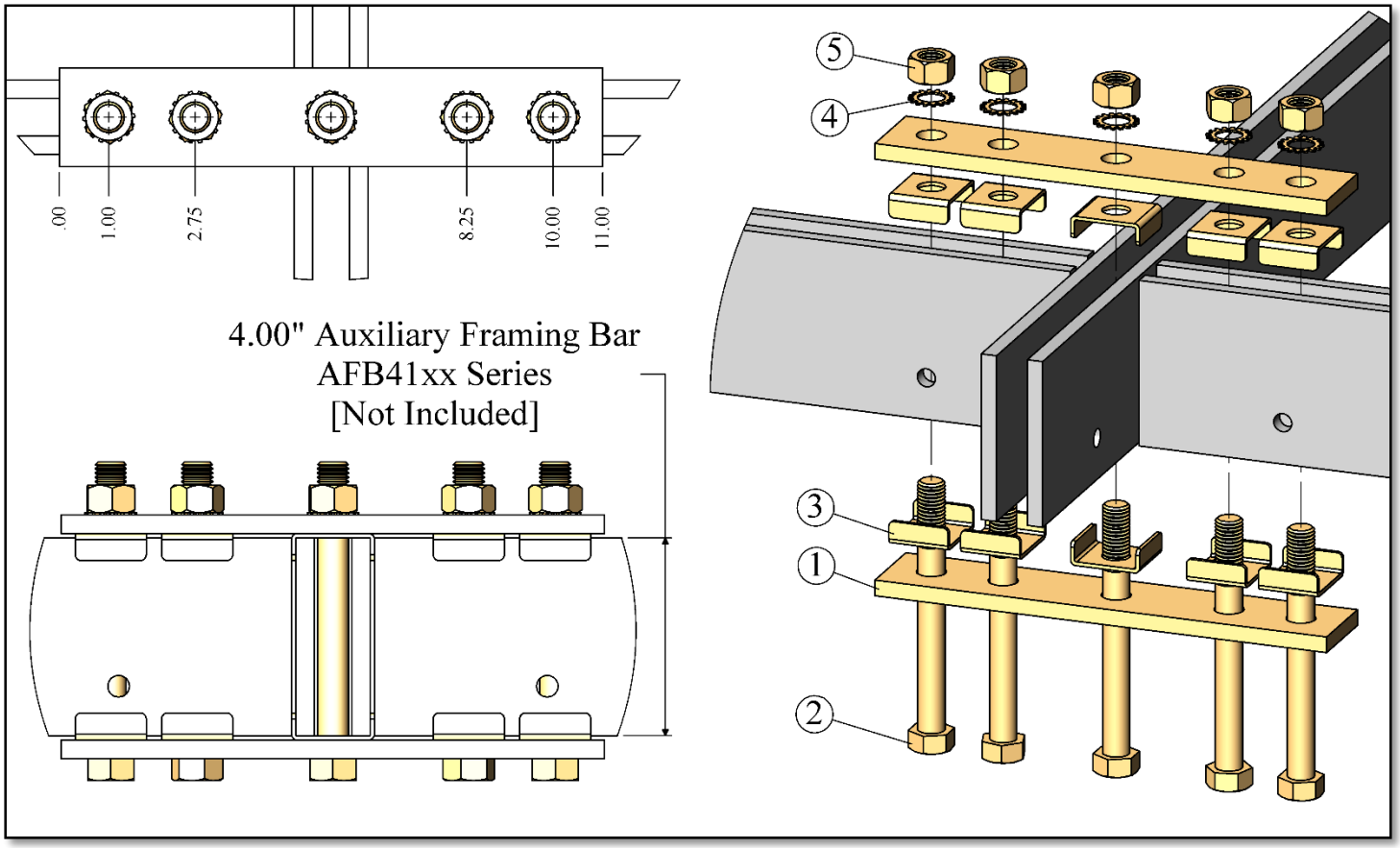

AFJ2502C – Auxiliary Framing Bar "X" Junction [4.00" Aux. Framing Bar – Not Included]			
Item#	CSF#	QTY	Description
1	A8956	2	Auxiliary Framing Bracing Bar
2	HH1217	5	5/8-11 HHCS x 6.00" LG.
3	FC313	10	Framing Clip
4	LWE158	5	5/8" External Tooth Lock Washer
5	HN148	5	5/8-11-UNC-2B – Hex Nut

Notes:

- Finish Code: Zinc and Yellow

RVSD*1017

Specifications subject to change. Please contact CSF Customer Service for more information.

© copyright 2004 Central Steel Fabricators, Inc.
http://www.centralsteelfab.com ◆ 2100 Parkes Drive, Broadview, IL 60155
Phone: 708-652-2037 Fax: 708-652-7010

AFJ2100 – Auxiliary Framing Channel Clip "T" Junction Kit

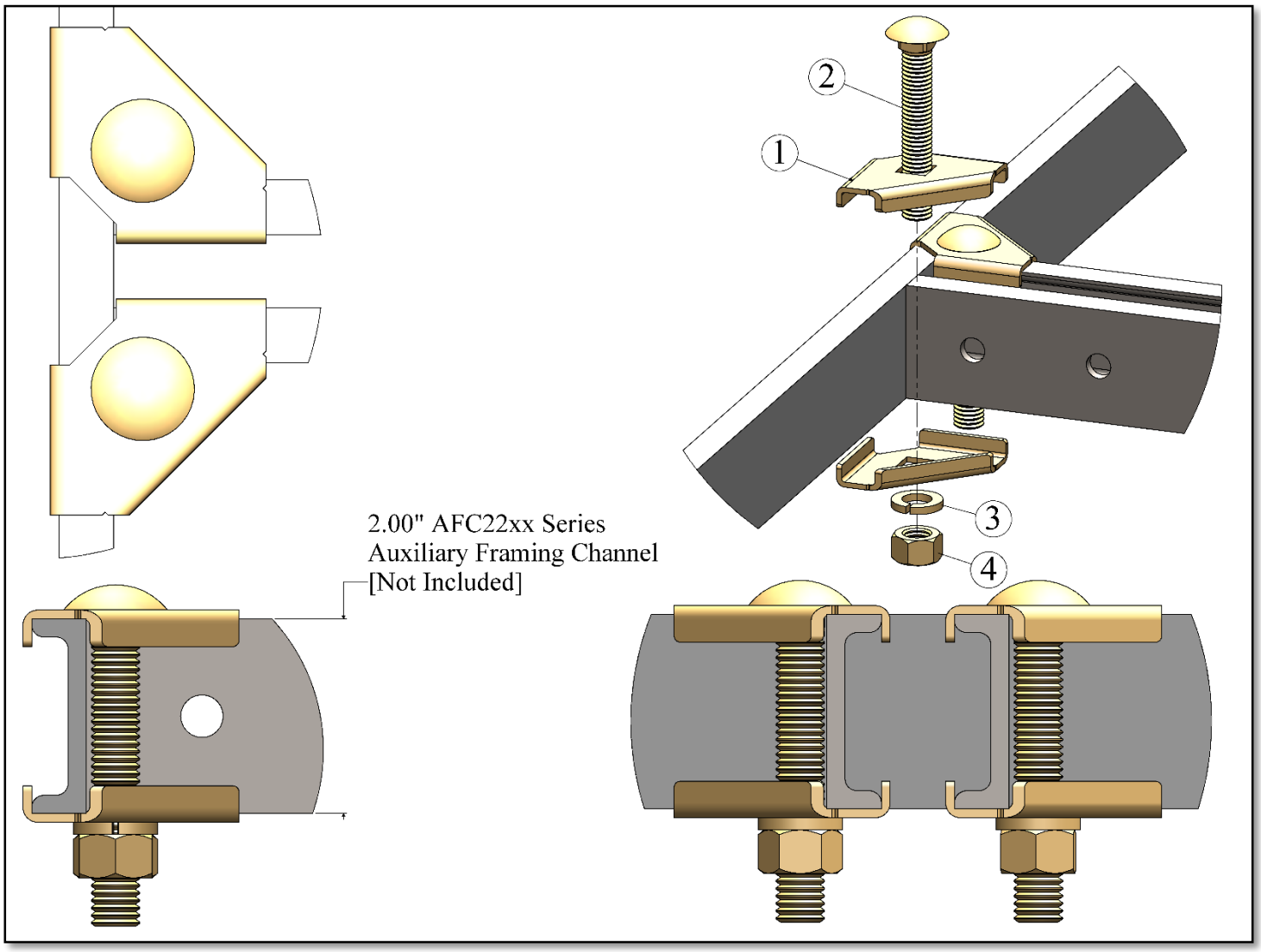

AFJ2100 - Auxiliary Framing Channel Clip "T" Junction Kit			
Item#	CSF#	QTY	Description
1	AFJ2	4	Auxiliary Framing Channel "T" Clip Bracket
2	CB1	2	1/2-13 Carriage Bolt x 3.25" LG.
3	LW157	2	1/2" Spring Lock Washer
4	HN147	2	1/2-13 Hex Nut

Notes:
- Finish Code: Zinc and Yellow

RVSD*1017

Specifications subject to change. Please contact CSF Customer Service for more information.

© copyright 2004 Central Steel Fabricators, Inc.
http://www.centralsteelfab.com ◆ 2100 Parkes Drive, Broadview, IL 60155
Phone: 708-652-2037 Fax: 708-652-7010

CC22 – Auxiliary Framing Bar "T" Junction Formerly AFJ2401

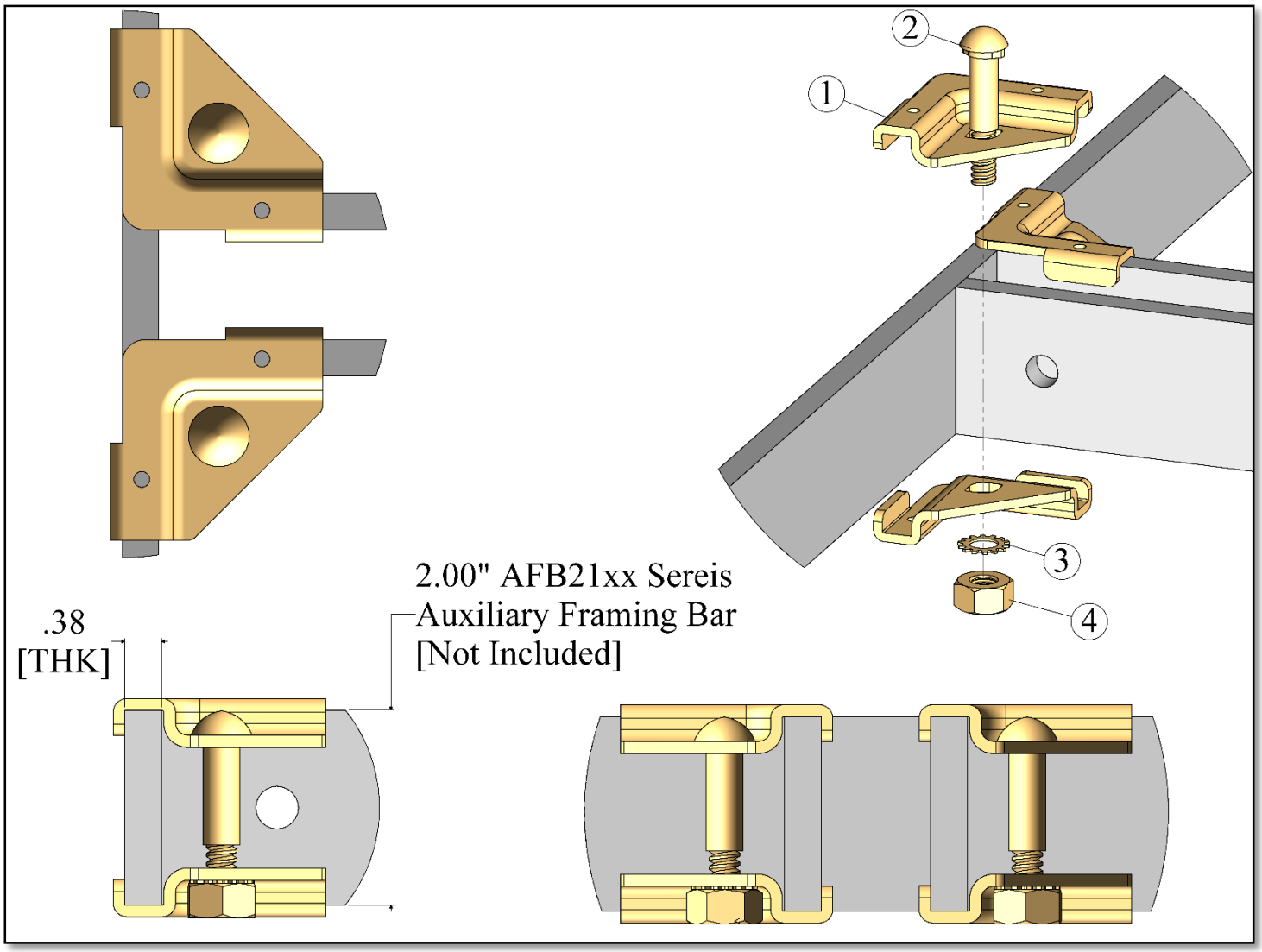

CC22 - Auxiliary Framing Bar "T" Junction – Formerly AFJ2401			
Item#	CSF#	QTY	Description
1	CC	4	Corner Clamp Bracket
2	CB170	2	3/8-16 Connection Bolt x 1.88" LG.
3	LWE156	2	3/8" External Tooth Lock Washer
4	HN146	2	3/8-16 Hex Nut

Notes:
- Finish Code: Zinc and Yellow

RVSD*1017

Specifications subject to change. Please contact CSF Customer Service for more information.

© copyright 2004 Central Steel Fabricators, Inc.
http://www.centralsteelfab.com ◆ 2100 Parkes Drive, Broadview, IL 60155
Phone: 708-652-2037 Fax: 708-652-7010

CORNER CLAMP KITS

1 1/2" KIT					
ITEM #	CSF #	CC1	CC12	CC13	CC14
1	CB171	1	2	3	4
2	CC	2	4	6	8
3	LW156	1	2	3	4
4	HN146	1	2	3	4

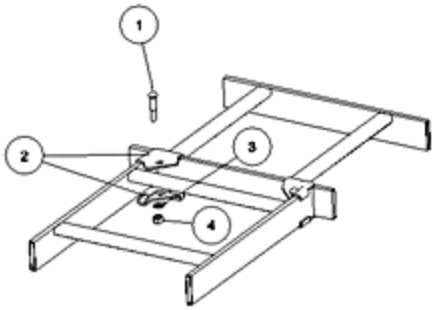

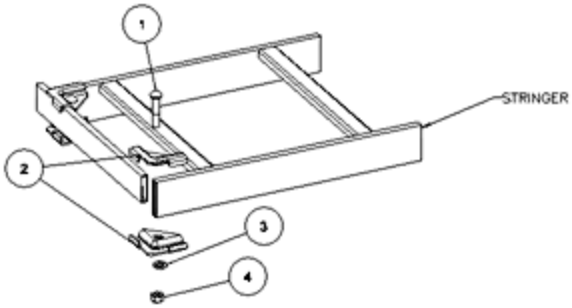

2" KIT					
ITEM #	CSF #	CC2	CC22	CC23	CC24
1	CB170	1	2	3	4
2	CC	2	4	6	8
3	LW156	1	2	3	4
4	HN146	1	2	3	4

NOTE: SPLICE FITS TUBE, BAR & CHANNEL STRINGER

OTHER KITS AVAILABLE UPON REQUEST

FINISH: ZINC DICHROMATE

Specifications subject to change. Please contact CSF Customer Service for more information.

© copyright 2004 Central Steel Fabricators, Inc.
http://www.centralsteelfab.com ◆ 2100 Parkes Drive, Broadview, IL 60155
Phone: 708-652-2037 Fax: 708-652-7010

PCBX – Power Cable Bracket for Auxiliary Framing Channel

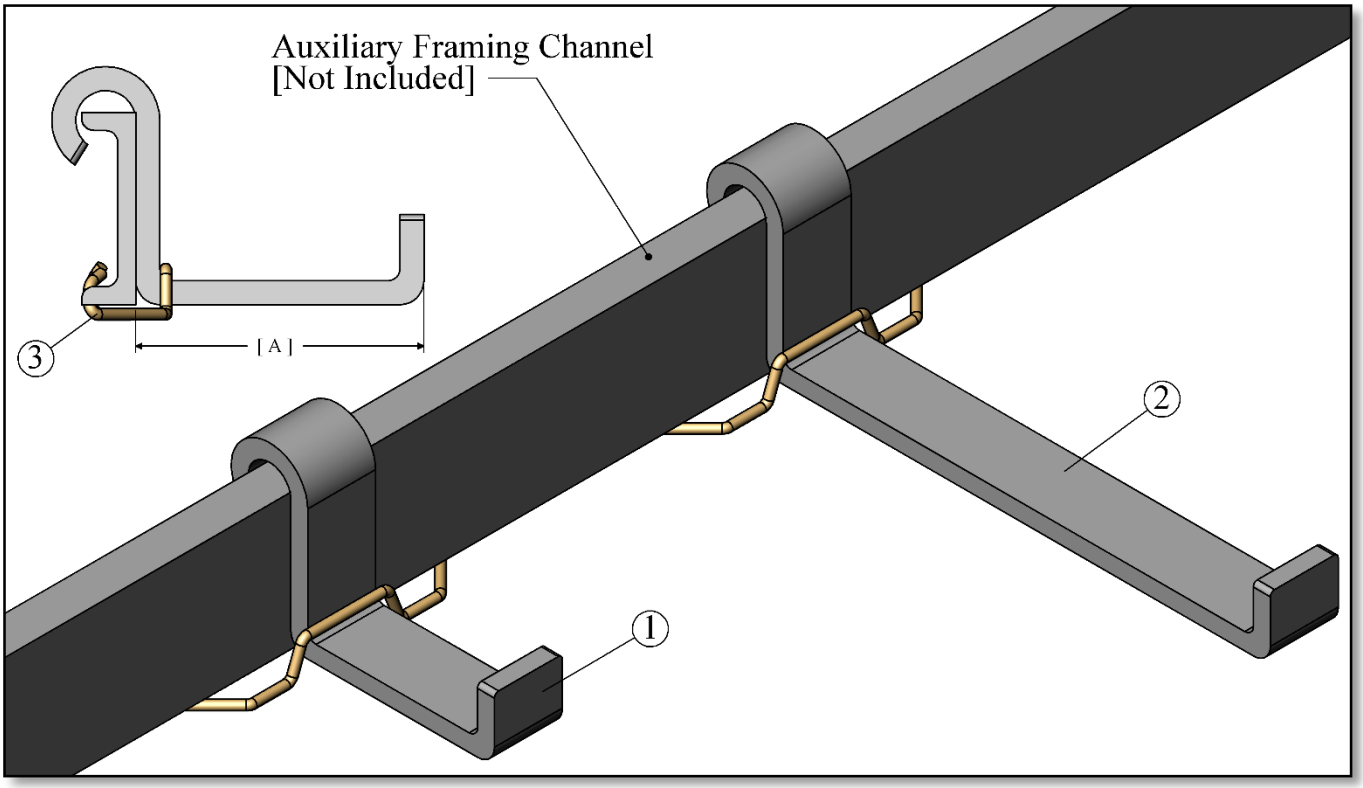

PCBX – Power Cable Bracket for Auxiliary Framing Channel			
CSF Part#	Items Included	[A]	Description
PCB1	1+3	3.00”	Power Cable Bracket – 3.00” with SPR06 Spring Clip
PCB2	2+3	7.43”	Power Cable Bracket - 7.43” With SPR06 Spring Clip

Notes:
- Auxiliary Framing Channel not included.
- Finish: See Tech data for paint codes.
- SPR06 included in PCBX Kit.
- SPR06 is zinc and yellow.

Specifications subject to change. Please contact CSF Customer Service for more information.
© copyright 2004 Central Steel Fabricators, Inc.
http://www.centralsteelfab.com ◆ 2100 Parkes Drive, Broadview, IL 60155
Phone: 708-652-2037 Fax: 708-652-7010

APB06K AUXILIARY POWER BRACKET 6.00” ASSEMBLY KIT

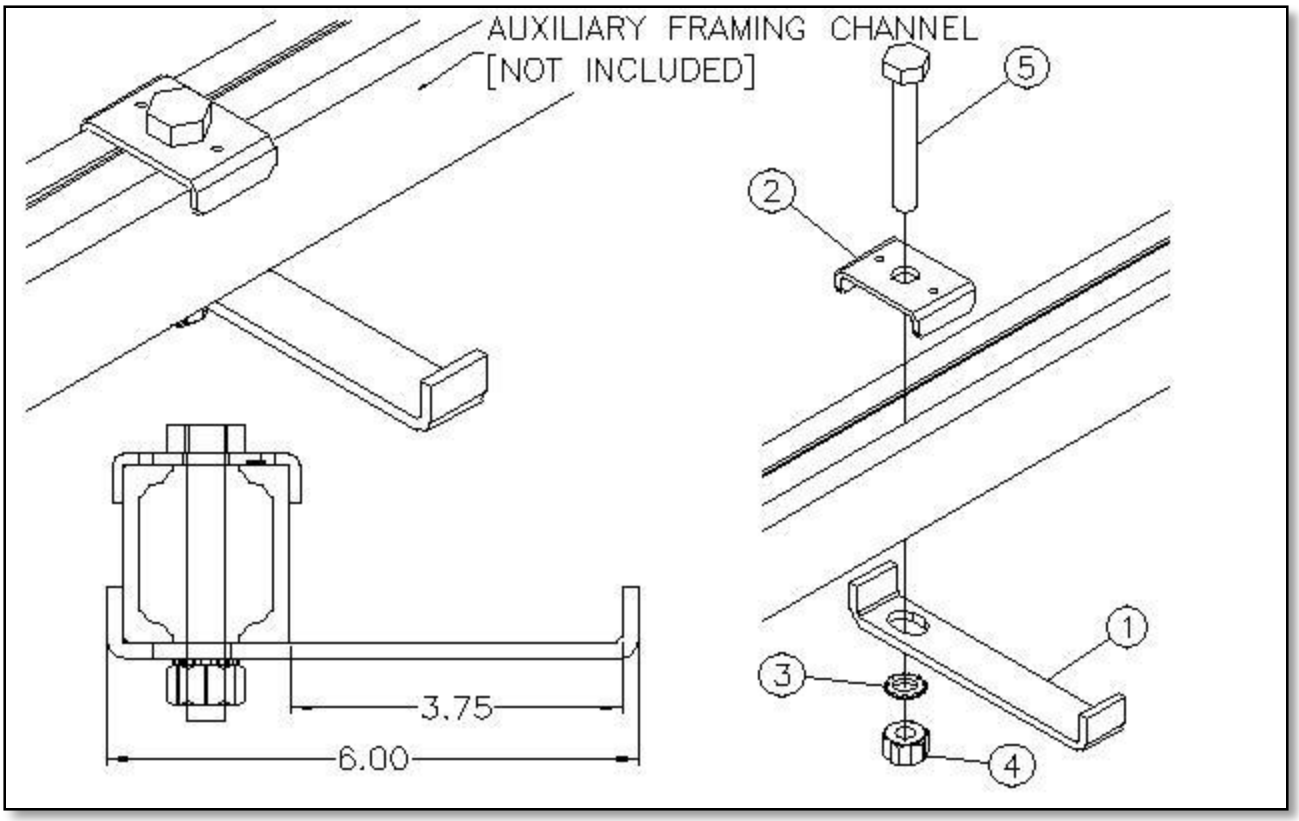

ITEM#	CSF#	QTY	DESCRIPTION
1	APB06	1	AUXILIARY FRAMING CHANNEL POWER BRACKET 6.00”
2	FC315	1	FRAMING CLIP
3	LWE157	1	1/2“ EXTERNAL TOOTH LOCKWASHER ZY
4	HN147	1	1/2-13 HEX NUT ZY
5	HH1111	1	1/2-13 HHCS X 3.00” LG. ZY

NOTES:
- FINISH: SEE TECH DATA FOR PAINT CODES - APB06, ALL OTHER PARTS ZINC AND YELLOW
- AUX FRAMING NOT INCLUDED

RVSD*0814

Specifications subject to change. Please contact CSF Customer Service for more information.

© copyright 2004 Central Steel Fabricators, Inc.
http://www.centralsteelfab.com ◆ 2100 Parkes Drive, Broadview, IL 60155
Phone: 708-652-2037 Fax: 708-652-7010

APB10K AUXILIARY POWER BRACKET 10.00” ASSEMBLY KIT

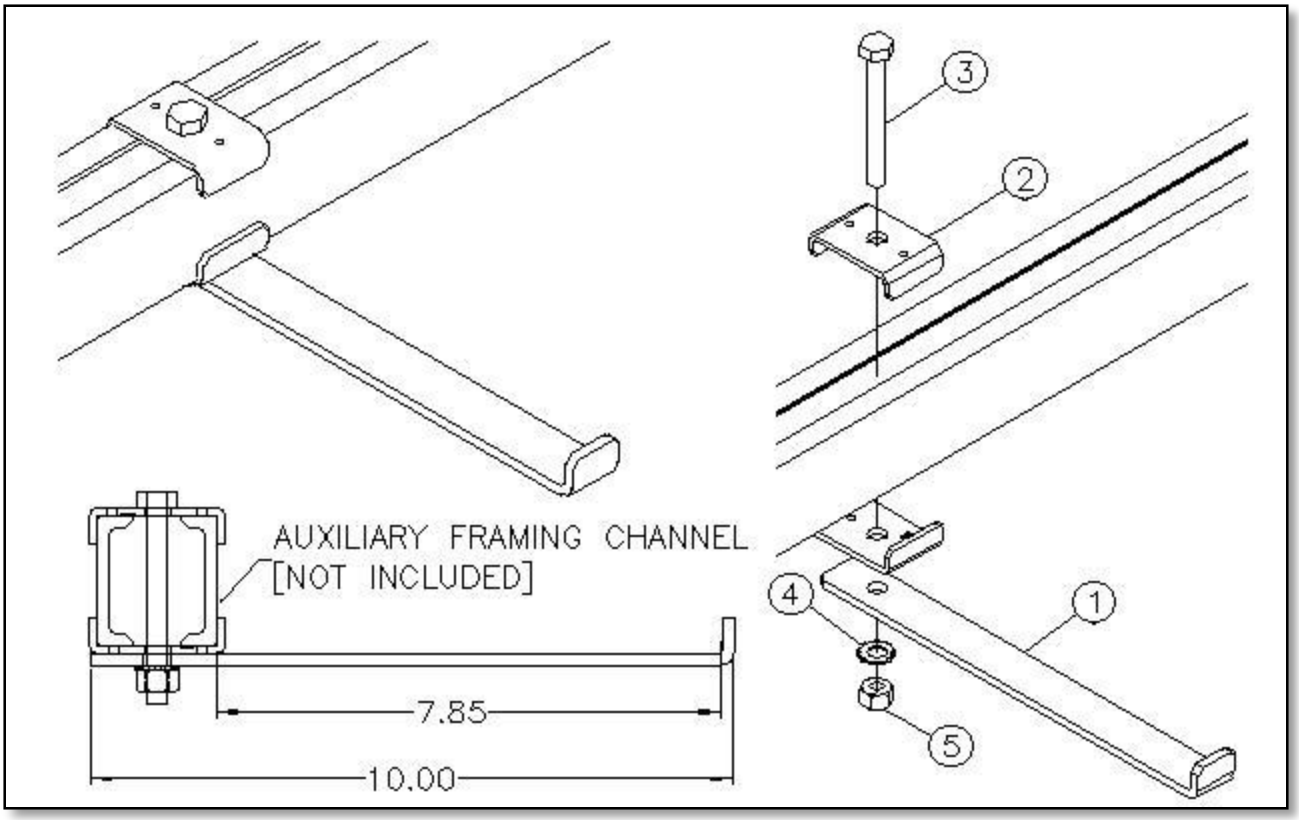

APB10K			
ITEM#	CSF#	QTY	DESCRIPTION
1	APB10	1	AUXILIARY FRAMING CHANNEL POWER BRACKET 10.00”
2	FC314	2	FRAMING CLIP
3	HH1013	1	3/8“ HHCS X 3.00” LG. ZY
4	LWE156	1	3/8 EXTERNAL TOOTH LOCKWASHER ZY
5	HN146	1	3/8-16 HEX NUT ZY

NOTES:
- FINISH: APB10 DG ALL OTHER PARTS ZINC AND YELLOW
- AUX FRAMING NOT INCLUDED

RVSD*0814

Specifications subject to change. Please contact CSF Customer Service for more information.

© copyright 2004 Central Steel Fabricators, Inc.
http://www.centralsteelfab.com ◆ 2100 Parkes Drive, Broadview, IL 60155
Phone: 708-652-2037 Fax: 708-652-7010

ACB4 - Auxiliary Cable Bracket

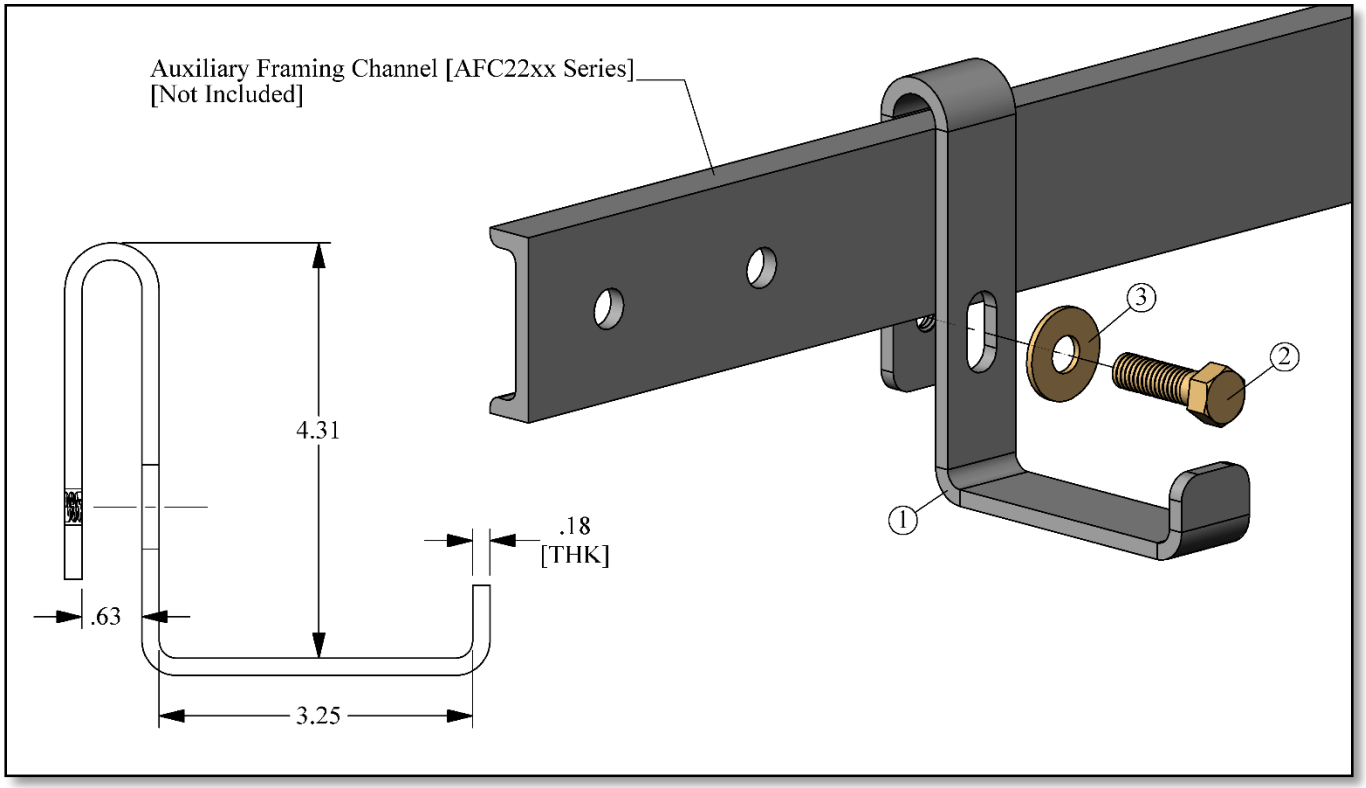

ACB4 – Auxiliary Channel Bracket [AFC22xx Series]			
ITEM#	CSF#	QTY	DESCRIPTION
1	ACB4	1	Auxiliary Framing Channel Bracket
2	HH1006	1	3/8-16 HHCS X 1.25” LG. - ZY
3	FW166	1	3/8” Flat Washer – ZY

Notes:

- Finish: ACB4 is DG- Gray.
- ACB4ZY is available.
- All Hardware is zinc and yellow.

RVSD*0117

Specifications subject to change. Please contact CSF Customer Service for more information.

© copyright 2004 Central Steel Fabricators, Inc.
http://www.centralsteelfab.com ◆ 2100 Parkes Drive, Broadview, IL 60155
Phone: 708-652-2037 Fax: 708-652-7010

SCRXXXX SUPPORT CABLE RACK

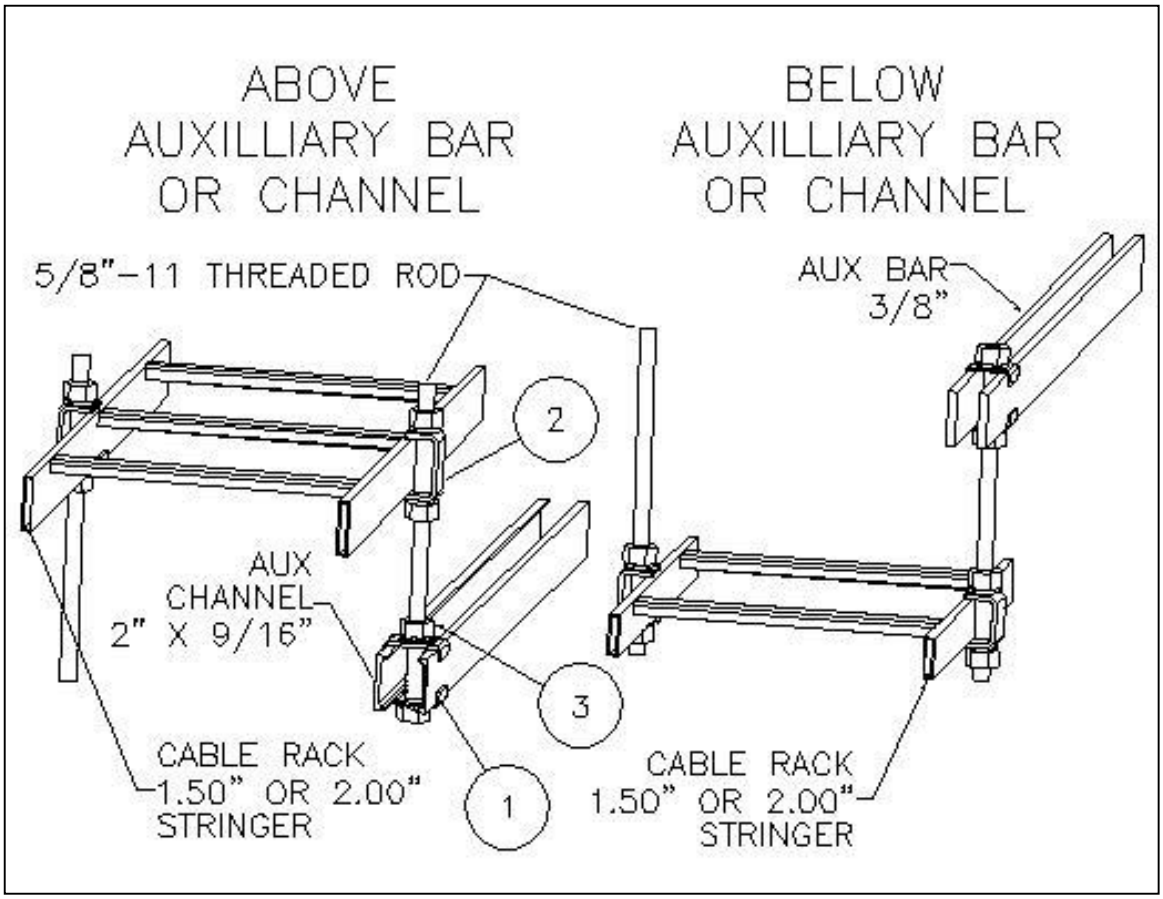

ITEM#	CSF#	SCR5501 BAR	SCR5501 C CHAN	SCR5601 BAR	SCR5601C CHAN	SCR6001 BAR	SCR6001C CHAN
1	FC313	2	0	2	0	2	0
1	FC316	0	2	0	2	0	2
2	SHB1	1	1	1	1	4	4
3	HN148	4	4	4	4	8	8
4	LW158	2	2	2	2	4	4

ITEM#	CSF#	SCR5502 BAR	SCR5502 C CHAN	SCR5602 BAR	SCR5602C CHAN	SCR6002 BAR	SCR6002C CHAN
1	FC313	2	0	2	0	2	0
1	FC316	0	2	0	2	0	2
2	SHB2	1	1	1	1	4	4
3	HN148	4	4	4	4	8	8
4	LW158	2	2	2	2	4	4

NOTES:
- FINISH: ZINC AND YELLOW
- CABLE RACK, AUX FRAMING, AND THREADED ROD NOT INCLUDED

Specifications subject to change. Please contact CSF Customer Service for more information.
© copyright 2004 Central Steel Fabricators, Inc.
http://www.centralsteelfab.com ◆ 2100 Parkes Drive, Broadview, IL 60155
Phone: 708-652-2037 Fax: 708-652-7010

SCR51XX SUPPORT CABLE RACK FROM AUXILIARY FRAMING

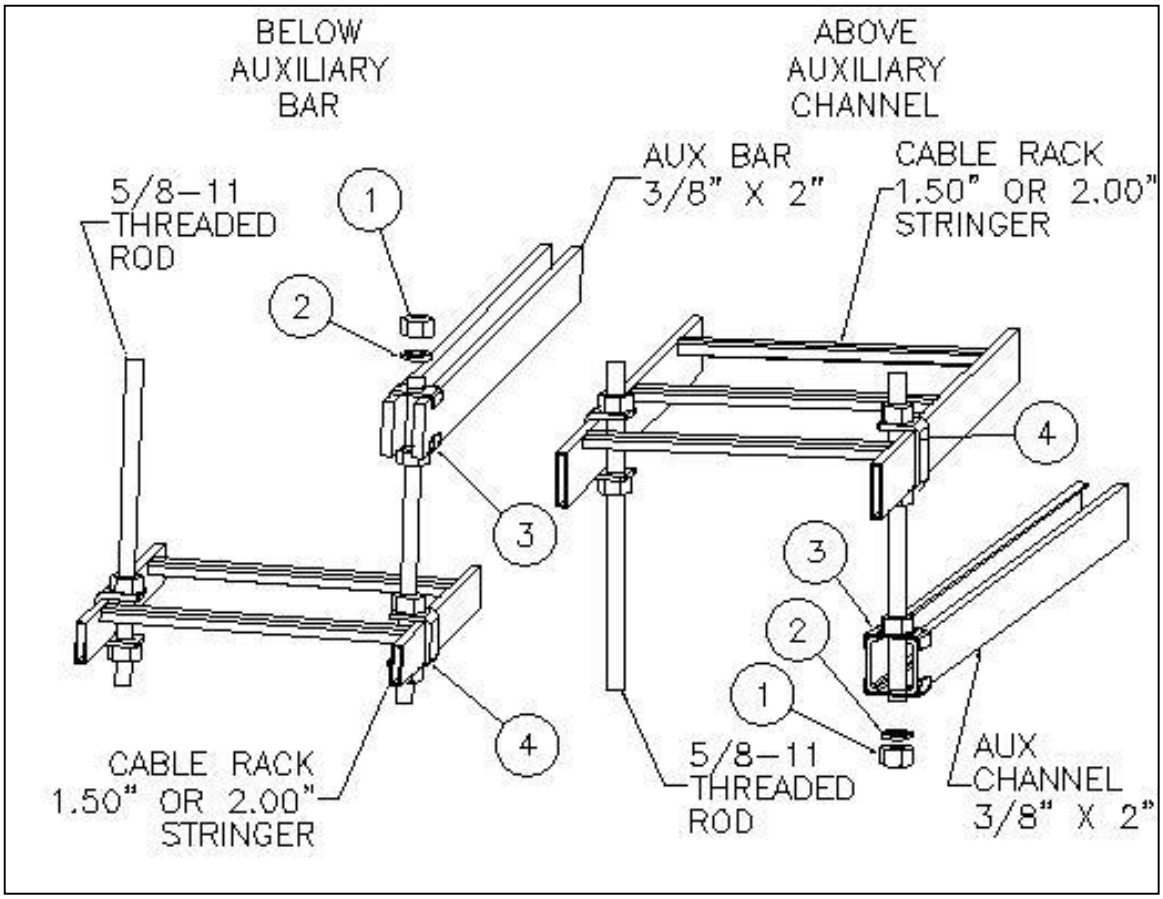

CABLE RACK TO AUX. BAR			
SCR5101-SCR5102			
ITEM#	CSF#	SCR5101 1.50”	SCR5102 2.00”
1	HN148	4	4
2	LW158	2	2
3	FC313	2	2
4	HB1	1	0
4	HB2	0	1

CABLE RACK TO AUX. CHANNEL			
SCR5101C-SCR5102C			
ITEM#	CSF#	SCR5101C 1.50”	SCR5102C 2.00”
1	HN148	4	4
2	LW158	2	2
3	FC316	2	2
4	HB1	1	0
4	HB2	0	1

NOTES:
- FINISH: ZINC AND YELLOW
- CABLE RACK, AUX FRAMING, AND THREADED ROD NOT INCLUDED

Specifications subject to change. Please contact CSF Customer Service for more information.
© copyright 2004 Central Steel Fabricators, Inc.
http://www.centralsteelfab.com ◆ 2100 Parkes Drive, Broadview, IL 60155
Phone: 708-652-2037 Fax: 708-652-7010

AUXILIARY POWER BRACKET 6" ASSEMBLY KIT

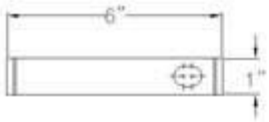

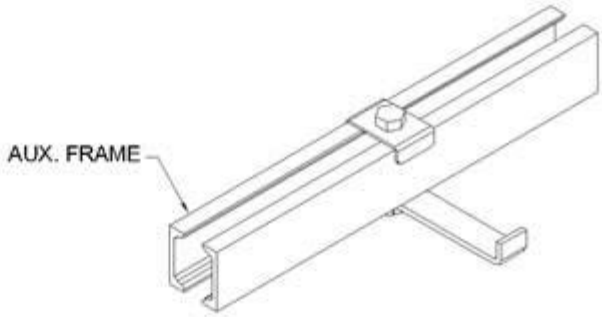

APB06K		
ITEM #	CSF #	QTY
1	HH1111	1
2	FC315	1
3	LW157	1
4	HN147	1

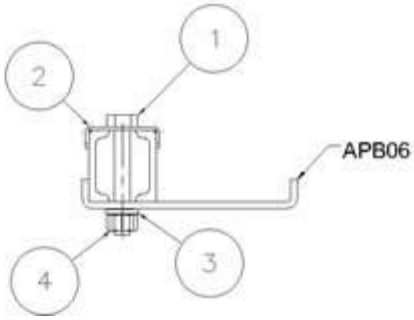

FINISH: TELEPHONE GRAY- POWDER COAT

Specifications subject to change. Please contact CSF Customer Service for more information.

© copyright 2004 Central Steel Fabricators, Inc.
http://www.centralsteelfab.com ◆ 2100 Parkes Drive, Broadview, IL 60155
Phone: 708-652-2037 Fax: 708-652-7010

AUXILIARY POWER BRACKET 10" ASSEMBLY KIT

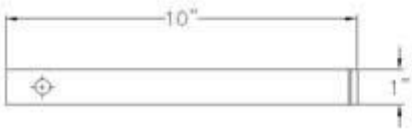

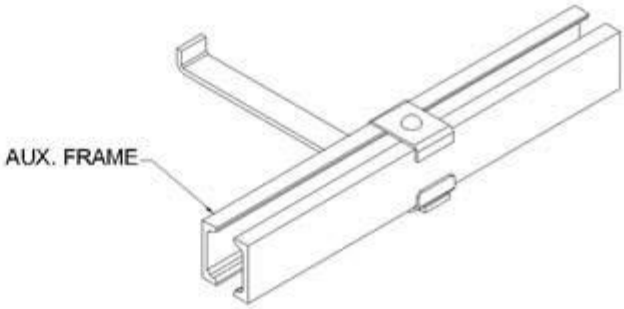

APB10K		
ITEM #	CSF #	QTY
1	CB183	1
2	FC705	1
3	FC314	1
4	HN146	1

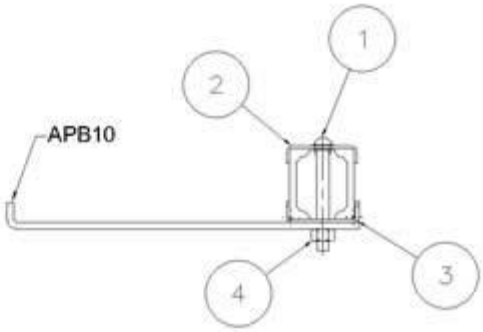

FINISH: TELEPHONE GRAY- POWDER COAT

Specifications subject to change. Please contact CSF Customer Service for more information.
© copyright 2004 Central Steel Fabricators, Inc.
http://www.centralsteelfab.com ◆ 2100 Parkes Drive, Broadview, IL 60155
Phone: 708-652-2037 Fax: 708-652-7010

SUPPORT CABLE RACK

BELOW AUXILIARY BAR OR CHANNEL

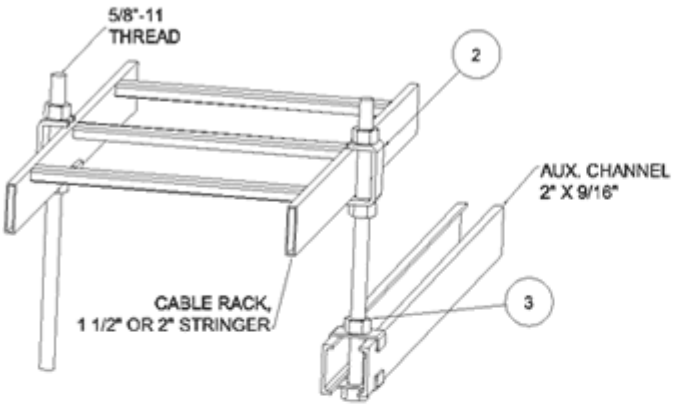

ABOVE AUXILIARY BAR OR CHANNEL

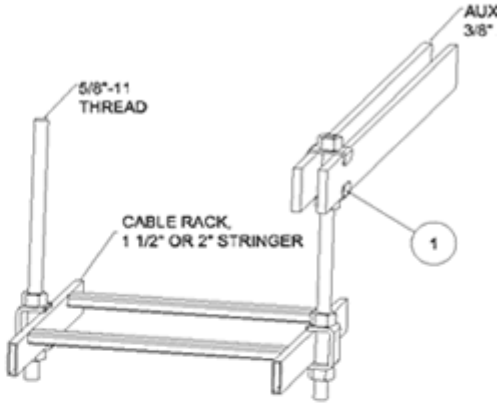

1 1/2" STRINGER							
ITEM	CSF#	SCR5501 BAR	SCR5501C CHAN	SCR5601 BAR	SCR5601C CHAN	SCR6001 BAR	SCR6001C CHAN
1	FC313	2	0	2	0	2	0
1	FC316	0	2	0	2	0	2
2	SHB2	1	1	1	1	4	4
3	HN148	4	4	4	4	8	8

2" STRINGER							
ITEM	CSF#	SCR5502 BAR	SCR5502C CHAN	SCR5602 BAR	SCR5602C CHAN	SCR6002 BAR	SCR6002C CHAN
1	FC313	2	0	2	0	2	0
1	FC316	0	2	0	2	0	2
2	SHB2	1	1	1	1	4	4
3	HN148	4	4	4	4	8	8

Specifications subject to change. Please contact CSF Customer Service for more information.
© copyright 2004 Central Steel Fabricators, Inc.
http://www.centralsteelfab.com ◆ 2100 Parkes Drive, Broadview, IL 60155
Phone: 708-652-2037 Fax: 708-652-7010

SUPPORT CABLE RACK FROM AUXILIARY FRAMING

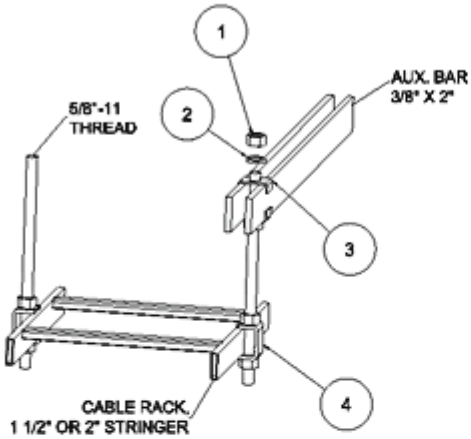

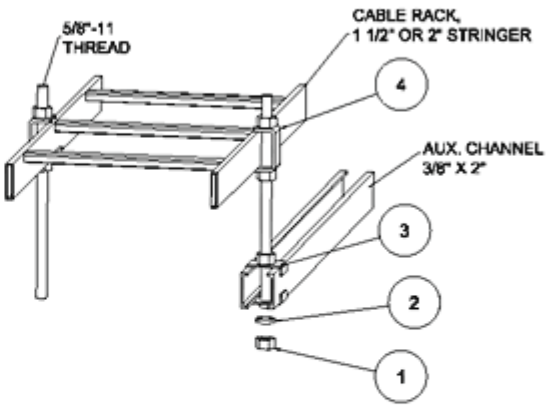

CABLE RACK TO AUX. BAR			
SCR5101-SCR5102			
ITEM #	CSF #	SCR5101 1 1/2"	SCR5102 2"
1	HN148	4	4
2	LW158	2	2
3	FC313	2	2
4	HB1	1	0
4	HB2	0	1

CABLE RACK TO AUX. CHANNEL			
SCR5101C-SCR5102C			
ITEM #	CSF #	SCR5101C 1 1/2"	SCR5102C 2"
1	HN148	4	4
2	LW158	2	2
3	FC316	2	2
4	HB1	1	0
4	HB2	0	1

Specifications subject to change. Please contact CSF Customer Service for more information.
© copyright 2004 Central Steel Fabricators, Inc.
http://www.centralsteelfab.com ◆ 2100 Parkes Drive, Broadview, IL 60155
Phone: 708-652-2037 Fax: 708-652-7010

SUPPORT TOP ANGLE TO AUXILIARY CHANNEL 2.00" X 1.00"

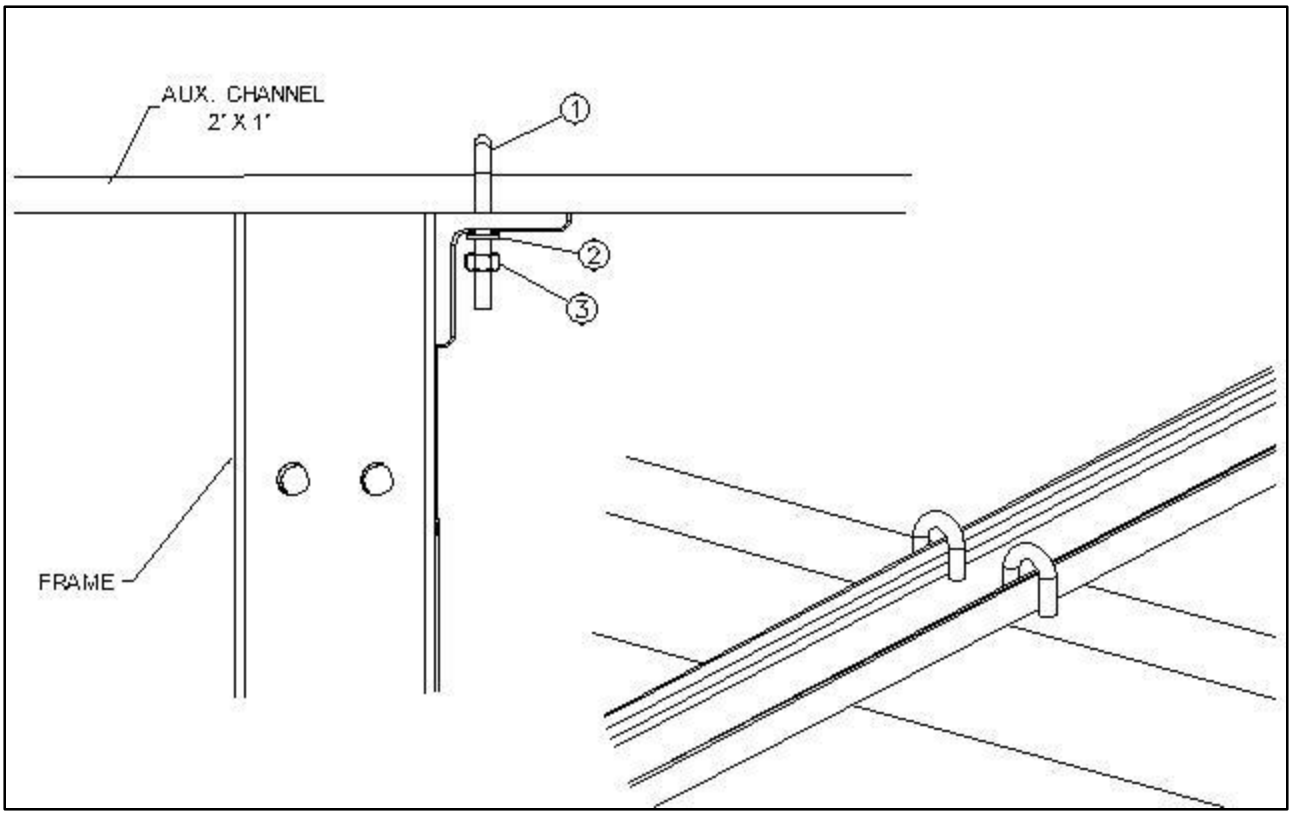

STA1101		
ITEM#	CSF#	QTY
1	JB241	2
2	LW154	2
3	HN144	2

NOTES:
- FINISH: ZINC AND YELLOW

Specifications subject to change. Please contact CSF Customer Service for more information.
© copyright 2004 Central Steel Fabricators, Inc.
http://www.centralsteelfab.com ◆ 2100 Parkes Drive, Broadview, IL 60155
Phone: 708-652-2037 Fax: 708-652-7010

SUPPORT 2.00" X 1.00" AUXILIARY CHANNEL WITH THREADED ROD

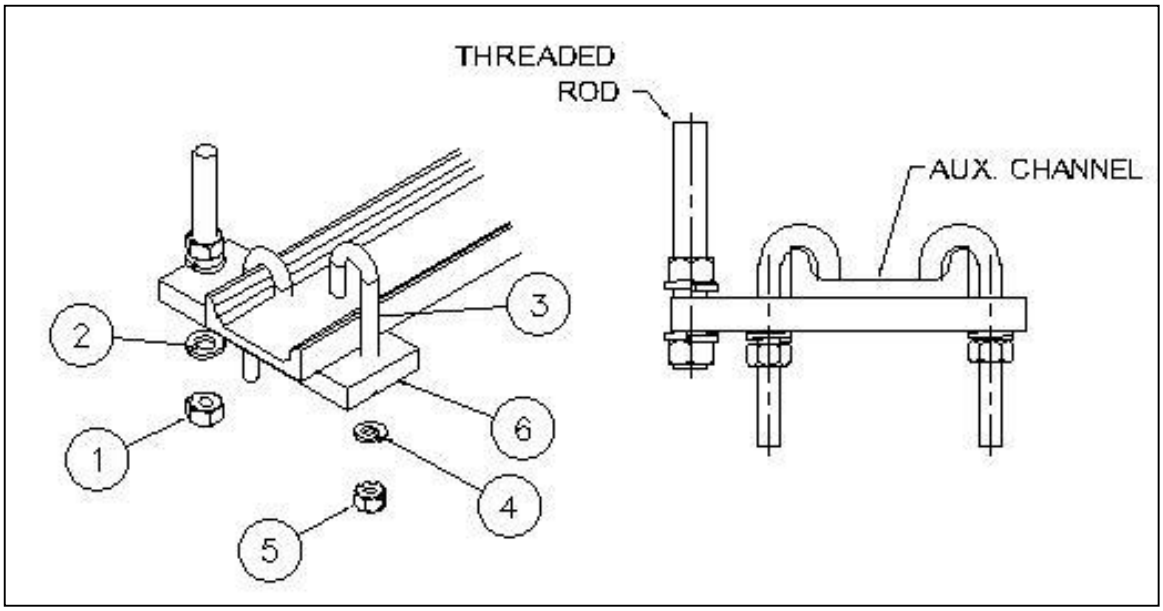

SAC1801		
ITEM#	CSF#	QTY
1	HN148	2
2	LW158	2
3	JB241	2
4	LW154	2
5	HN144	2
6	A2215	1

NOTES:
- FINISH: ZINC AND YELLOW
-AUX CHANNEL AND THREADED ROD NOT INCLUDED

Specifications subject to change. Please contact CSF Customer Service for more information.
© copyright 2004 Central Steel Fabricators, Inc.
http://www.centralsteelfab.com ◆ 2100 Parkes Drive, Broadview, IL 60155
Phone: 708-652-2037 Fax: 708-652-7010

FASTEN TOP ANGLE TO 2.00" X 1.00" AUXILIARY CHANNEL

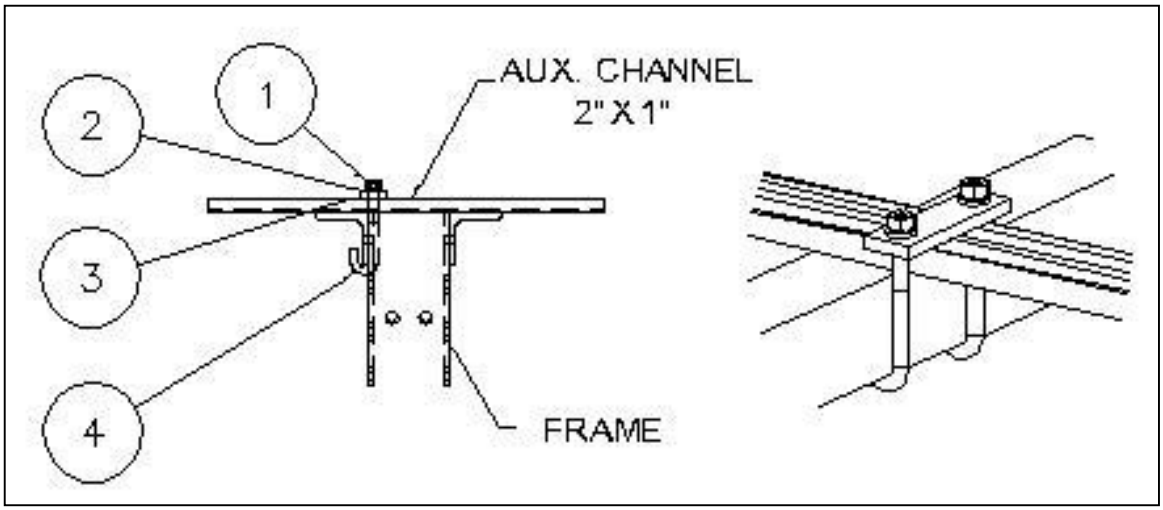

ITEM#	CSF#	QTY
1	HN145	2
2	LW155	2
3	THP281	1
4	JB244	2

NOTES:
- FINISH: ZINC AND YELLOW

Specifications subject to change. Please contact CSF Customer Service for more information.
© copyright 2004 Central Steel Fabricators, Inc.
http://www.centralsteelfab.com ◆ 2100 Parkes Drive, Broadview, IL 60155
Phone: 708-652-2037 Fax: 708-652-7010

SAC1001 - SUPPORT AUXILIARY CHANNEL – 2.00" X 1.00" W/J-BOLT

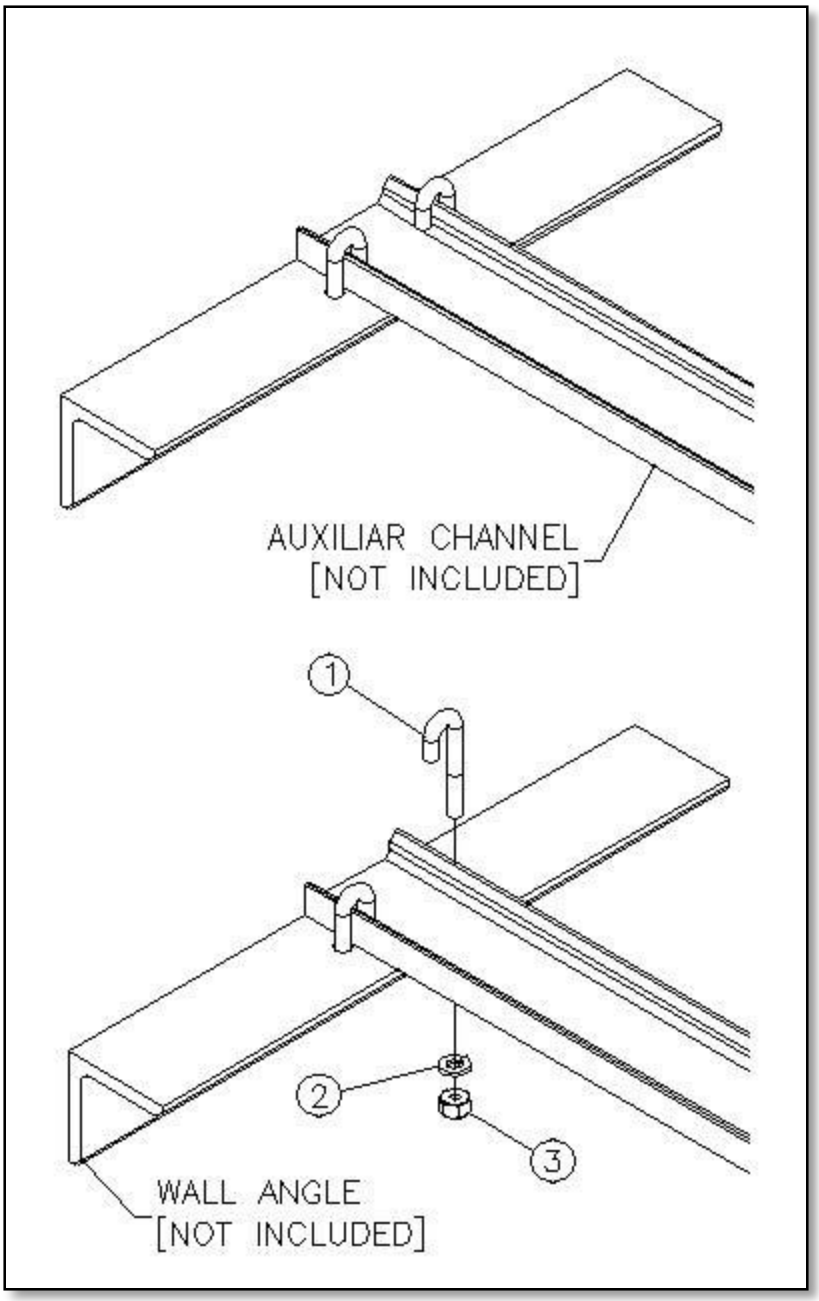

NOTES:

- FINISH: ZINC AND YELLOW

SAC1001 – SUPPORT AUIXILIARY CHANNEL W/ "J" BOLT			
ITEM#	CSF#	QTY	DESCRIPTION
1	JB241	2	1/4-20 "J" BOLT X 1.75" LG
2	LW154	2	1/4 SPRING LOCKWASHER
3	HN144	2	1/4-20 HEX BUT ZY

RVSD*0115

Specifications subject to change. Please contact CSF Customer Service for more information.

© copyright 2004 Central Steel Fabricators, Inc.
http://www.centralsteelfab.com ◆ 2100 Parkes Drive, Broadview, IL 60155
Phone: 708-652-2037 Fax: 708-652-7010

JUNCTION 2.00" X 1.00" AUXILIARY CHANNEL AT TOP ANGLE

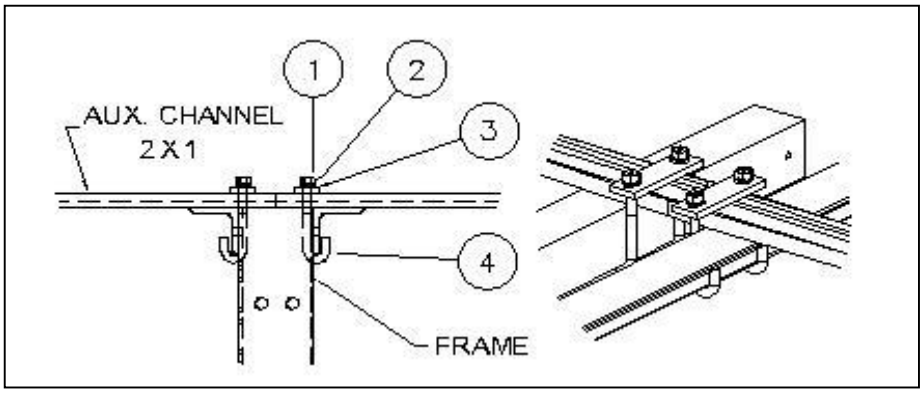

JAC1601		
ITEM #	CSF#	QTY
1	HN145	4
2	LW155	4
3	THP281	2
4	JB244	4

NOTES:
- FINISH: ZINC AND YELLOW

Specifications subject to change. Please contact CSF Customer Service for more information.
© copyright 2004 Central Steel Fabricators, Inc.
http://www.centralsteelfab.com ◆ 2100 Parkes Drive, Broadview, IL 60155
Phone: 708-652-2037 Fax: 708-652-7010

HEAVY RUBBER END CAPS FOR 1 1/2" & 2" MATERIAL

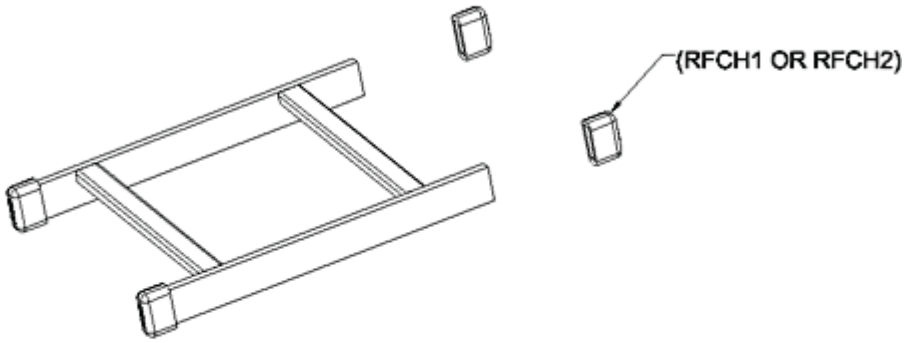

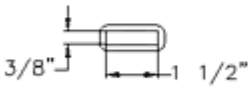

(RFCH1)

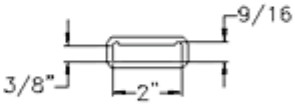

(RFCH2)

1 1/2" STRINGER	
RFCH701	PAIR OF (RFCH1)

2" STRINGER	
RFCH702	PAIR OF (RFCH2)

NOTE: RFCH2 USED FOR BOTH 2" CABLE RACK AND 2" X 9/16" AUXILIARY CHANNEL

Specifications subject to change. Please contact CSF Customer Service for more information.
© copyright 2004 Central Steel Fabricators, Inc.
http://www.centralsteelfab.com ◆ 2100 Parkes Drive, Broadview, IL 60155
Phone: 708-652-2037 Fax: 708-652-7010

HEAVY RUBBER END CAPS FOR 1.50” AND 2.00” MATERIAL

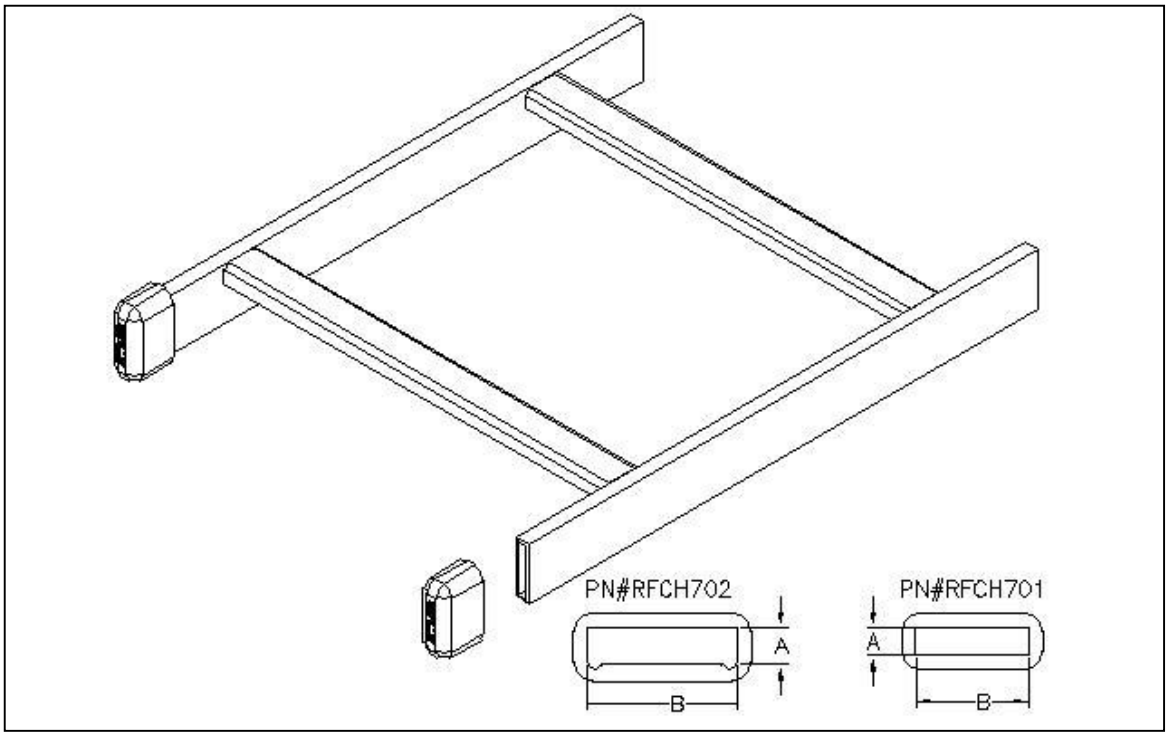

PART #	QTY. OF RFCH1 1.50”	QTY. OF RFCH2 2.00”	A	B
RFCH701	2	0	0.38”	1.50”
RFCH702	0	2	0.38”	2.00”

NOTES:

-RFCH702 IS USED FOR BOTH 2.00” STRINGERS AND 2.00” X 0.56” AUXILIARY CHANNEL
-MATERIAL: ABS BLACK. RUBBER, 50 DUROMETER

Specifications subject to change. Please contact CSF Customer Service for more information.
© copyright 2004 Central Steel Fabricators, Inc.
http://www.centralsteelfab.com ◆ 2100 Parkes Drive, Broadview, IL 60155
Phone: 708-652-2037 Fax: 708-652-7010

WSO WALL SLEEVE

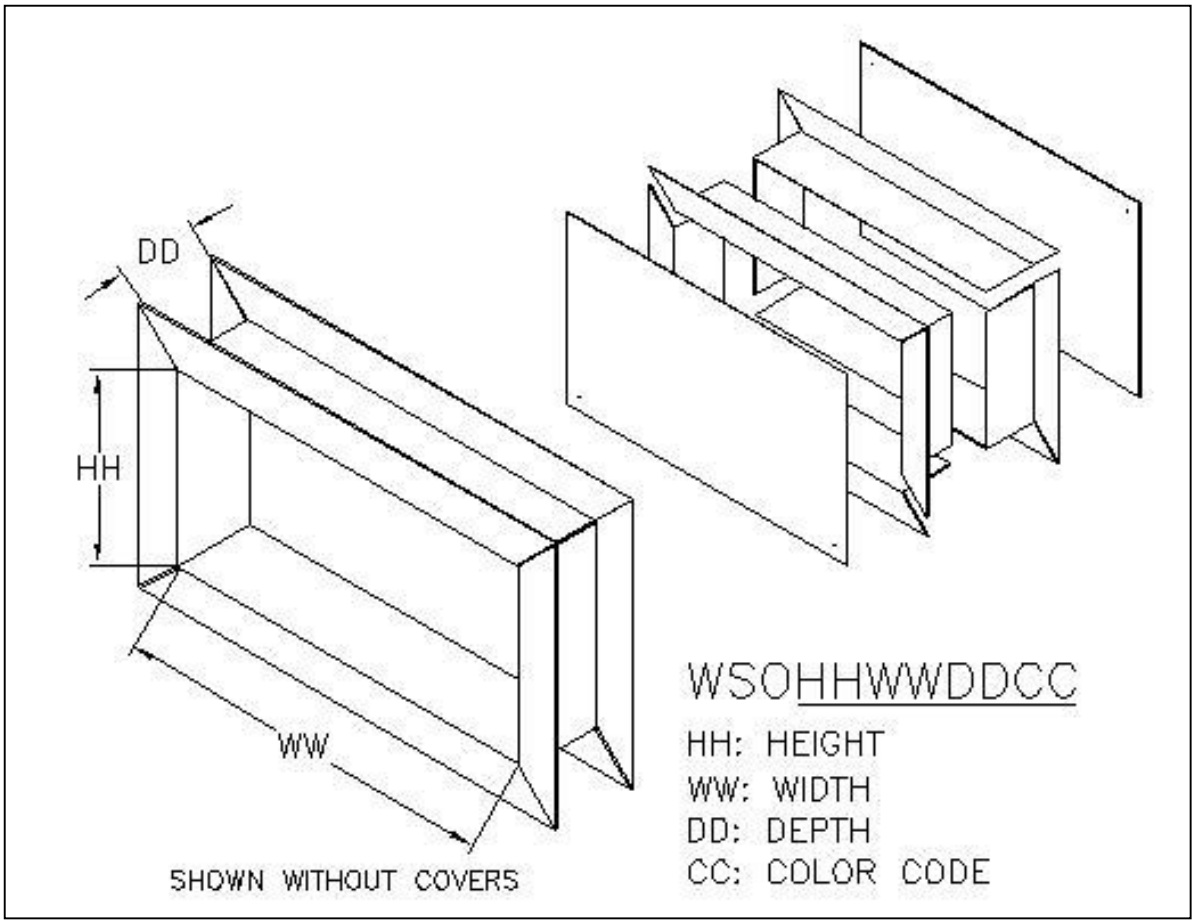

NOTES:
-TO ORDER WALL SLEEVE THE FOLLOWING DIMENSIONS ARE REQUIRED; WALL OPENING: HEIGHT, WIDTH, AND DEPTH.
- EXAMPLE: WSO102004DG WOULD RESULT IN A WALL SLEEVE 10.00” HIGH X 20.00” WIDE X 4.00” - 7.00” DEEP. - COLOR: SEE TECH DATA FOR PAINT CODES

RVSD*0714

Specifications subject to change. Please contact CSF Customer Service for more information.
© copyright 2004 Central Steel Fabricators, Inc.
http://www.centralsteelfab.com ◆ 2100 Parkes Drive, Broadview, IL 60155
Phone: 708-652-2037 Fax: 708-652-7010

ANTI-SLIP KIT – 1-1/2" & 2.00" CABLE RACK/AUXILIARY FRAMING

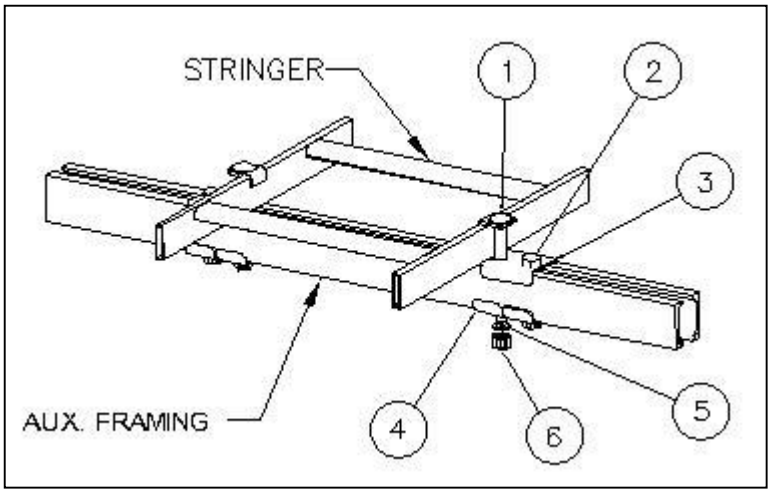

ITEM#	CSF#	ASK1500 (1 1/2")	ASK2000(2")
1	CJB4	2	0
2	CJB5	0	2
3	HH1110	2	2
4	FC355	2	2
5	FC315	4	4
6	LWI157	4	4
7	HN147	4	4

NOTES:
- FINISH: ZINC AND YELLOW

Specifications subject to change. Please contact CSF Customer Service for more information.
© copyright 2004 Central Steel Fabricators, Inc.
http://www.centralsteelfab.com ◆ 2100 Parkes Drive, Broadview, IL 60155
Phone: 708-652-2037 Fax: 708-652-7010

SUPPORT AUXILIARY CHANNEL – 2.00" X 1.00" W/BOLT

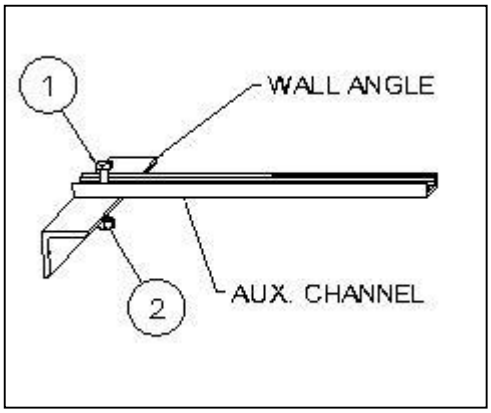

SAC0901		
ITEM#	CSF#	QTY
1	HH1003	1
2	HN146	1

NOTES:
- FINISH: ZINC AND YELLOW

Specifications subject to change. Please contact CSF Customer Service for more information.
© copyright 2004 Central Steel Fabricators, Inc.
http://www.centralsteelfab.com ◆ 2100 Parkes Drive, Broadview, IL 60155
Phone: 708-652-2037 Fax: 708-652-7010

CHB11 CEILING HANGER BRACKET KIT

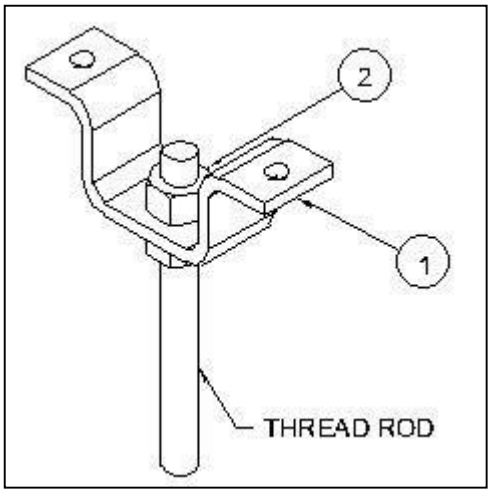

ITEM#	CSF#	QTY	DESCRIPTION
1	CHB1	1	CEILING HANGER BRACKET
2	HN148	2	5/8"-11 HEX NUT

NOTES:
- FINISH: ZINC AND YELLOW

Specifications subject to change. Please contact CSF Customer Service for more information.
© copyright 2004 Central Steel Fabricators, Inc.
http://www.centralsteelfab.com ◆ 2100 Parkes Drive, Broadview, IL 60155
Phone: 708-652-2037 Fax: 708-652-7010

ACS08K AUXILIARY CHANNEL SPLICE KIT

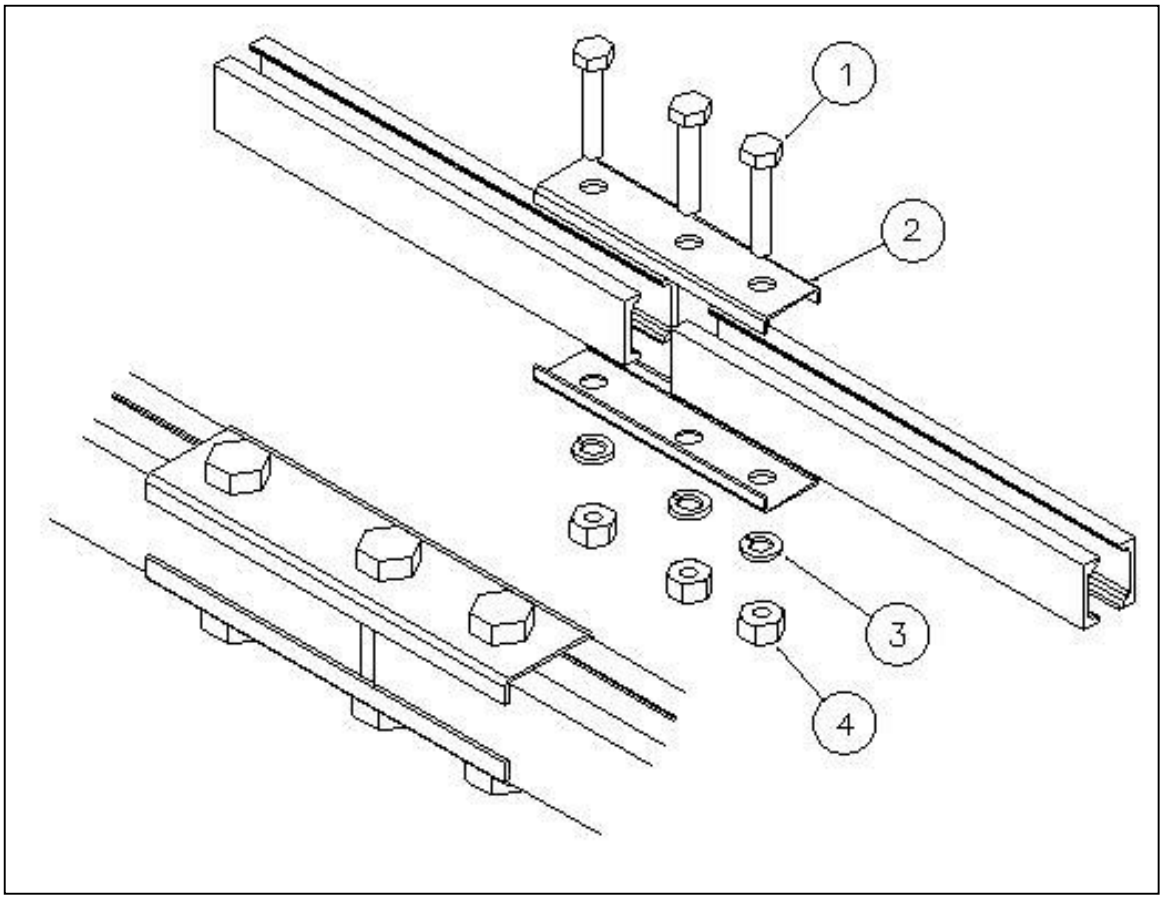

ACS08K		
ITEM #	CSF#	QTY
1	HH1209	3
2	ACS08	2
3	LW158	3
4	HN148	3

NOTES:
-AUX FRAMING NOT INCLUDED
- FINISH: ZINC AND YELLOW

Specifications subject to change. Please contact CSF Customer Service for more information.
© copyright 2004 Central Steel Fabricators, Inc.
http://www.centralsteelfab.com ◆ 2100 Parkes Drive, Broadview, IL 60155
Phone: 708-652-2037 Fax: 708-652-7010

ACS07K AUXILIARY BAR SPLICE KIT

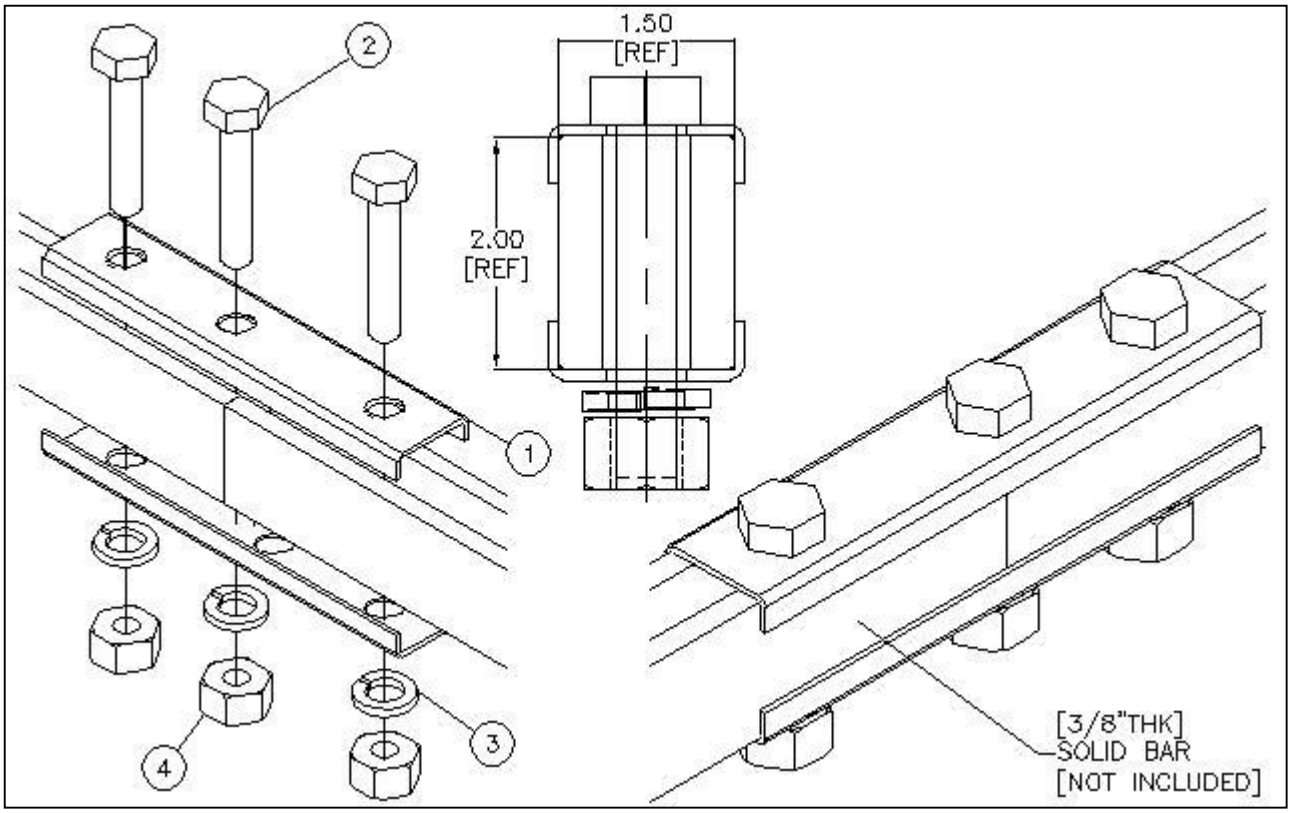

ACS07K			
ITEM#	QTY	CSF#	DESCRIPTION
1	2	ACS09	AUX. BAR SPLICE ZY
2	3	HH1209	5/8-11 HHCS X 3.00” LG. ZY
3	3	LW158	5/8 SPRING LOCKWASHER ZY
4	3	HN148	5/8-11 HEX NUT ZY

NOTES:
-AUX FRAMING NOT INCLUDED
- FINISH: ZINC AND YELLOW

Specifications subject to change. Please contact CSF Customer Service for more information.
© copyright 2004 Central Steel Fabricators, Inc.
http://www.centralsteelfab.com ◆ 2100 Parkes Drive, Broadview, IL 60155
Phone: 708-652-2037 Fax: 708-652-7010

UNISTRUT SPLICE KIT– USP04K

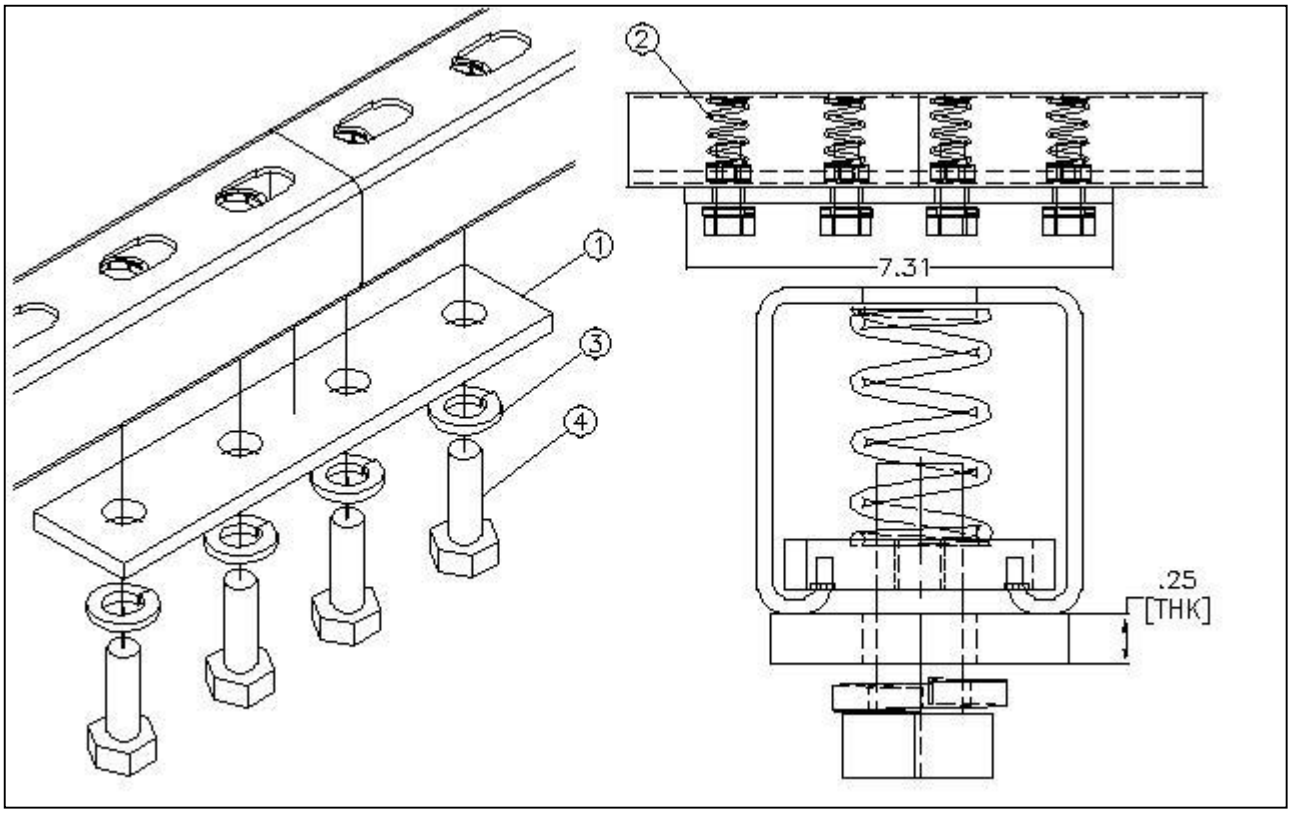

USP04K			
ITEM#	QTY	CSF#	DESCRIPTION
1	1	USP04	UNISTRUT SPLICE PLATE
2	4	USN50S	UNISTRUT NUT 1/2”-13 W/ SPRING
3	4	LW157	1/2” SPRING LOCKWASHER ZY
4	4	HH1104	1/2”-13 HHCS X 1.25” LG.

NOTES:
- UNISTRUT NOT INCLUDED
- FINISH: ZINC AND YELLOW

Specifications subject to change. Please contact CSF Customer Service for more information.
© copyright 2004 Central Steel Fabricators, Inc.
http://www.centralsteelfab.com ◆ 2100 Parkes Drive, Broadview, IL 60155
Phone: 708-652-2037 Fax: 708-652-7010

AUXILIARY FRAME FINISHING CLIP

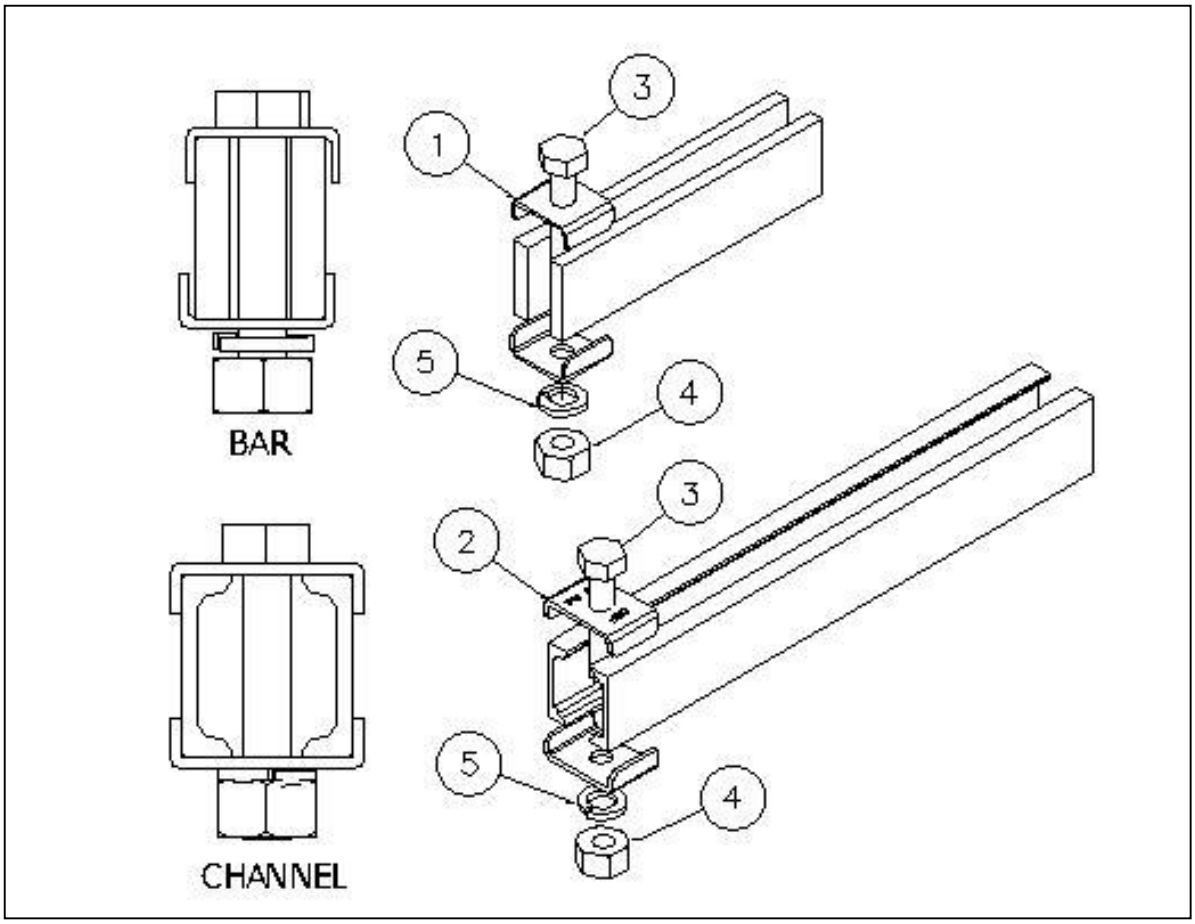

ITEM#	CSF#	AFF2801 (BAR)	AFF2802 (CHAN)
1	FC312	2	0
2	FC315	0	2
3	HH1110	1	1
4	HN147	1	1
5	LW157	1	1

NOTES:
- FINISH: ZINC AND YELLOW
- AUX BAR AND FRAMING NOT INCLUDED

Specifications subject to change. Please contact CSF Customer Service for more information.
© copyright 2004 Central Steel Fabricators, Inc.
http://www.centralsteelfab.com ◆ 2100 Parkes Drive, Broadview, IL 60155
Phone: 708-652-2037 Fax: 708-652-7010

FRAMING, AUXILIARY END BOLT W/ SPACER 3/8” - 16

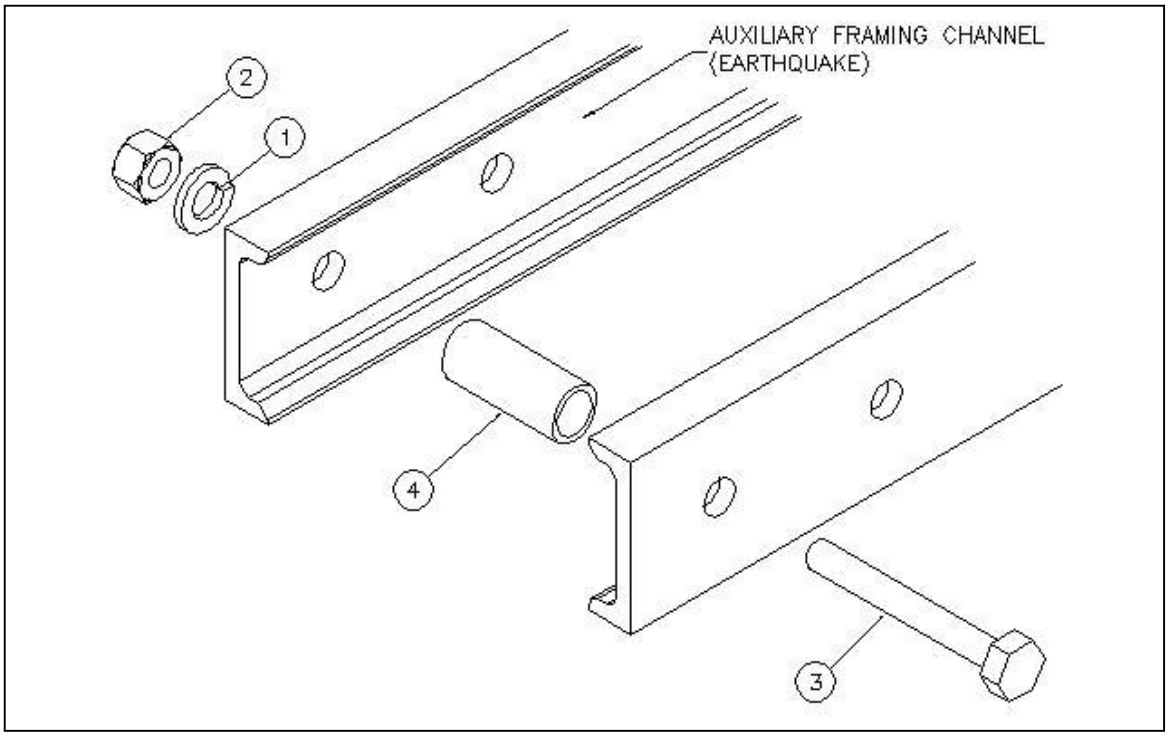

AFE375		
ITEM#	CSF#	QTY
1	LW156	1
2	HN146	1
3	HH1011	1
4	A8171-150	1

Specifications subject to change. Please contact CSF Customer Service for more information.
© copyright 2004 Central Steel Fabricators, Inc.
http://www.centralsteelfab.com ◆ 2100 Parkes Drive, Broadview, IL 60155
Phone: 708-652-2037 Fax: 708-652-7010

AFS825 – Seismic Auxiliary Framing Splice - Earthquake

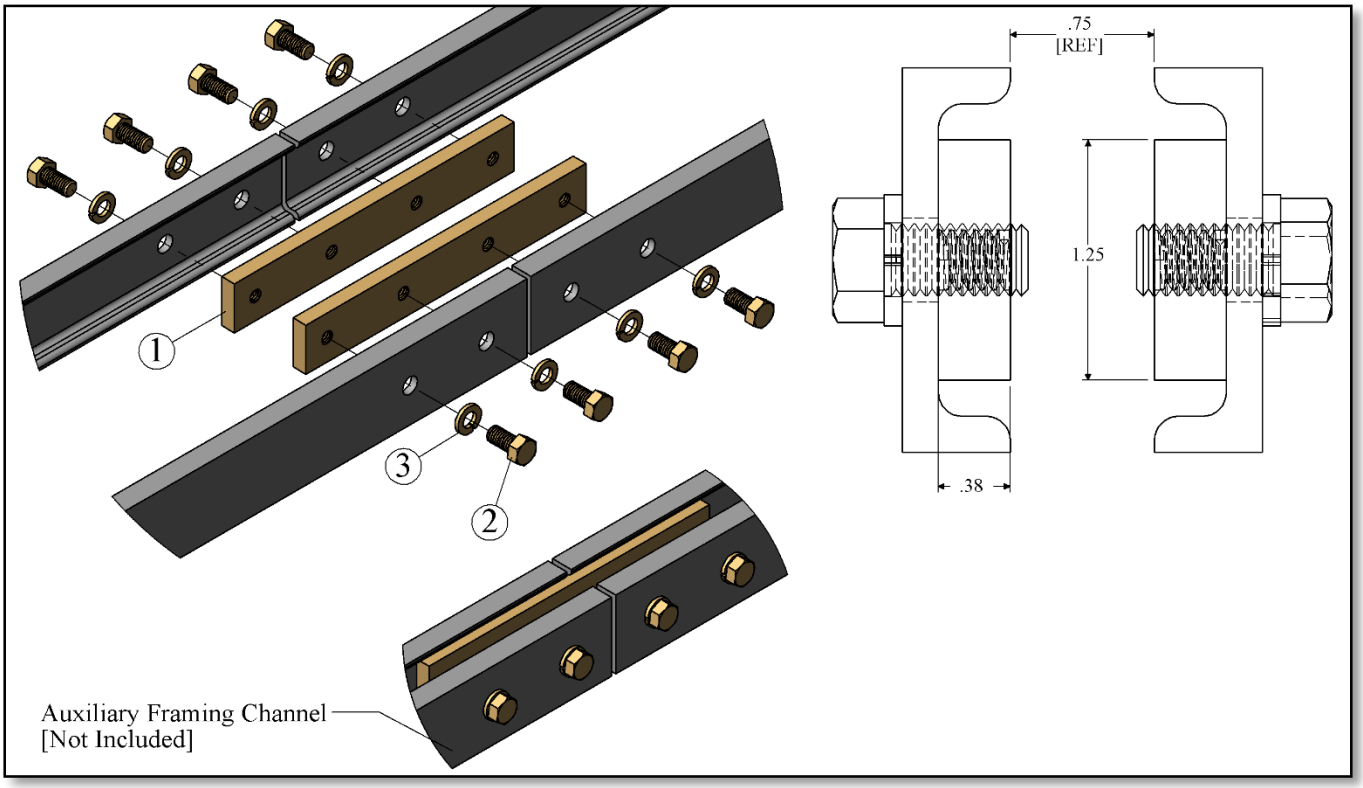

AFS825 – Seismic Auxiliary Framing Splice - Earthquake			
ITEM#	CSF#	QTY	DESCRIPTION
1	AFS825B	2	Splice Bar 8.25” x 1.25” X [3/8” THK]
2	HH1003	8	3/8-16 HHCS X 3/4” LG. – ZY
3	LW156	8	3/8” Spring Lock Washer – ZY
4	LWE156	8	3/8” External Tooth Lock Washer – ZY

Notes:

- Finish: ZY
- Sufficient hardware included to splice [1x] set of parallel Auxiliary Framing Channel.

RVSD*0117

Specifications subject to change. Please contact CSF Customer Service for more information.

© copyright 2004 Central Steel Fabricators, Inc.
http://www.centralsteelfab.com ◆ 2100 Parkes Drive, Broadview, IL 60155
Phone: 708-652-2037 Fax: 708-652-7010

BAF4001 – Auxiliary Framing Bar Brace Kit [Ceiling / Wall]

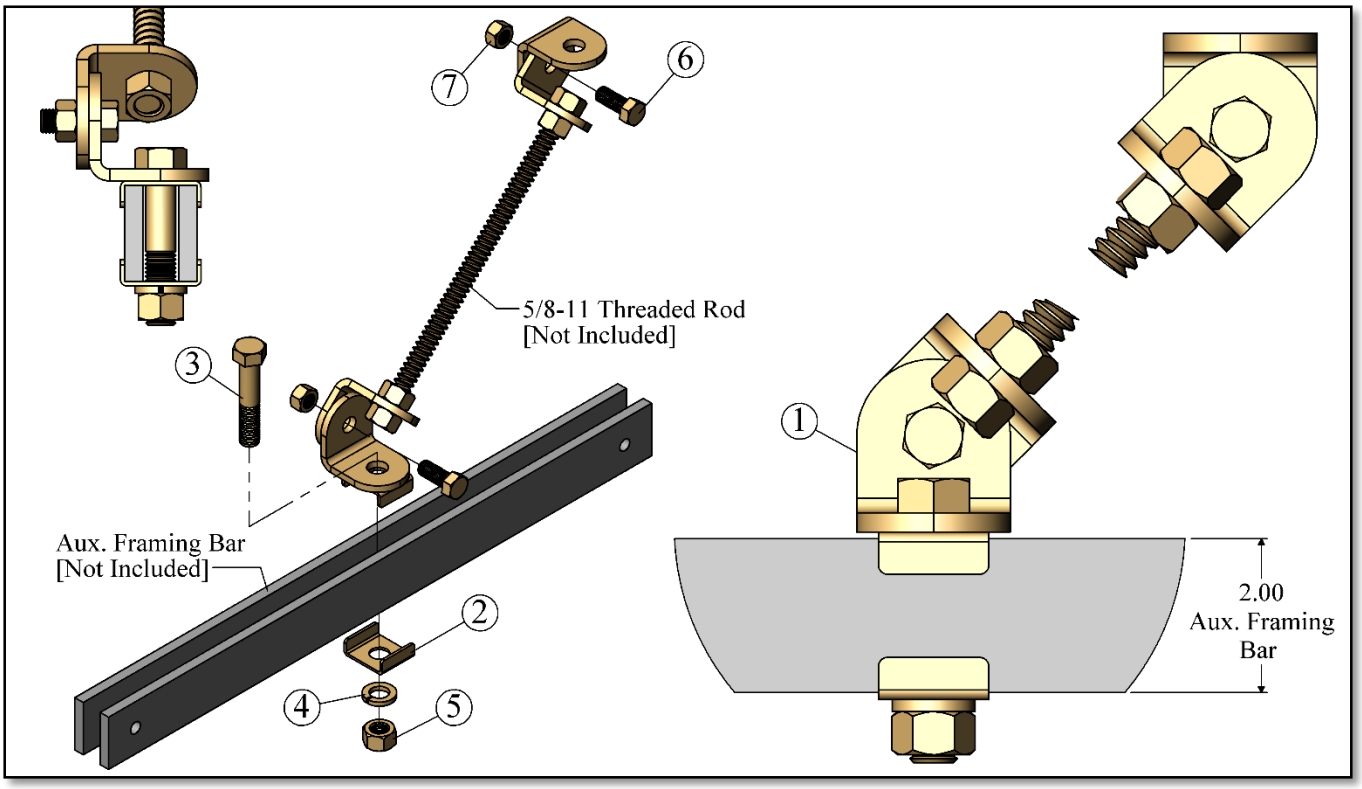

BAF4001 – Auxiliary Framing Bar Brace Kit [Ceiling/ Wall]			
Item	CSF#	QTY	Description
1	BB1	4	Bracing Bracket
2	FC313	2	Framing Clip
3	HH1210	1	5/8-11 HHCS x 3.25” LG. – ZY
4	LW158	1	5/8” Spring Lock Washer - ZY
5	HN148	5	5/8-11 Hex Nut - ZY
6	HH1104	2	1/2-13 HHCS x 1.25” LG. - ZY
7	HN147	2	1/2-13 Hex Nut - ZY

Notes:
Finish Code: Zinc Yellow

RVSD*0317

Specifications subject to change. Please contact CSF Customer Service for more information.

© copyright 2004 Central Steel Fabricators, Inc.
http://www.centralsteelfab.com ◆ 2100 Parkes Drive, Broadview, IL 60155
Phone: 708-652-2037 Fax: 708-652-7010

BAF4002 – Auxiliary Framing Channel Brace Kit [Ceiling / Wall]

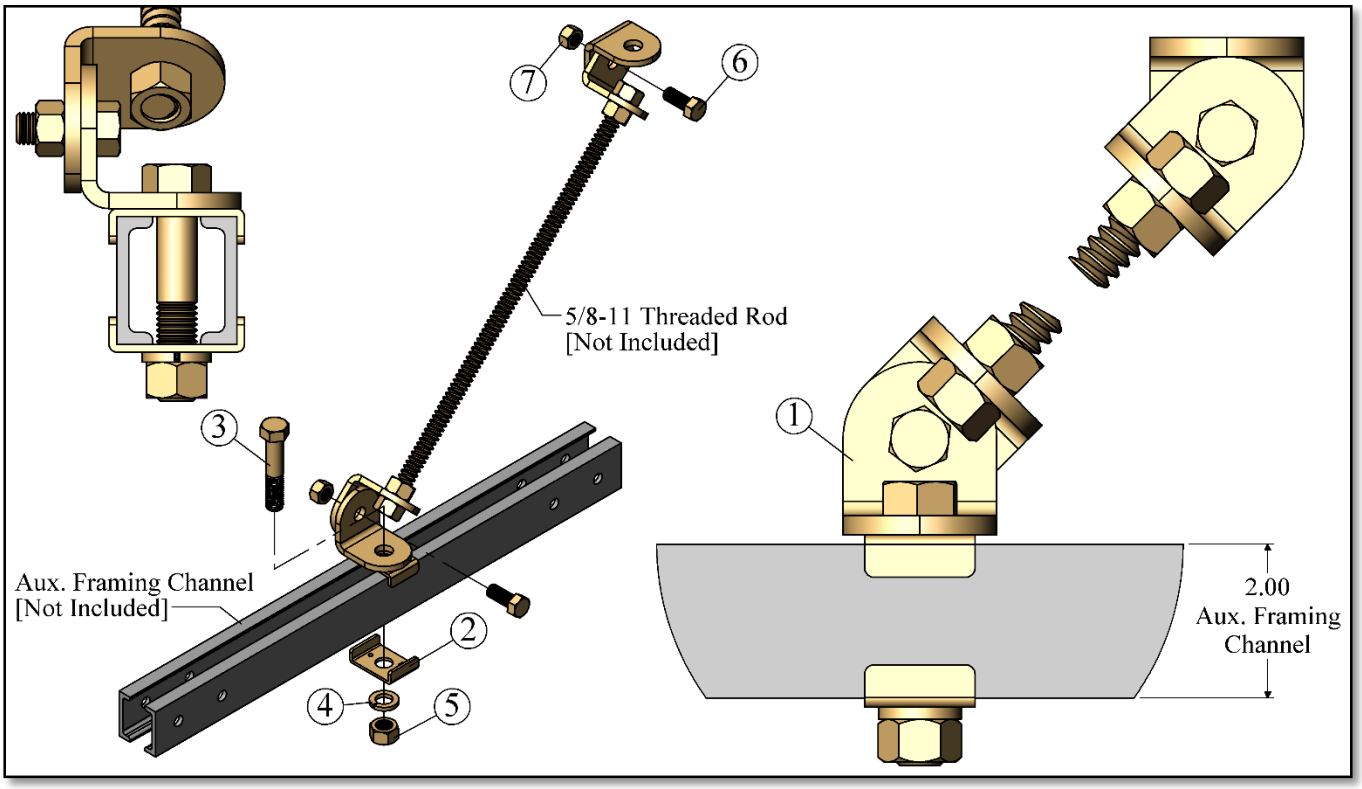

BAF4002 – Auxiliary Framing Channel Brace Kit [Ceiling/ Wall]			
Item	CSF#	QTY	Description
1	BB1	4	Bracing Bracket
2	FC316	2	Framing Clip
3	HH1210	1	5/8-11 HHCS x 3.25” LG. – ZY
4	LW158	1	5/8” Spring Lock Washer - ZY
5	HN148	5	5/8-11 Hex Nut - ZY
6	HH1104	2	1/2-13 HHCS x 1.25” LG. - ZY
7	HN147	2	1/2-13 Hex Nut - ZY

Notes:
Finish Code: Zinc Yellow

RVSD*0317

Specifications subject to change. Please contact CSF Customer Service for more information.
© copyright 2004 Central Steel Fabricators, Inc.
http://www.centralsteelfab.com ◆ 2100 Parkes Drive, Broadview, IL 60155
Phone: 708-652-2037 Fax: 708-652-7010

BAF4101 – Auxiliary Framing Bar Brace Kit [Ceiling / Wall]

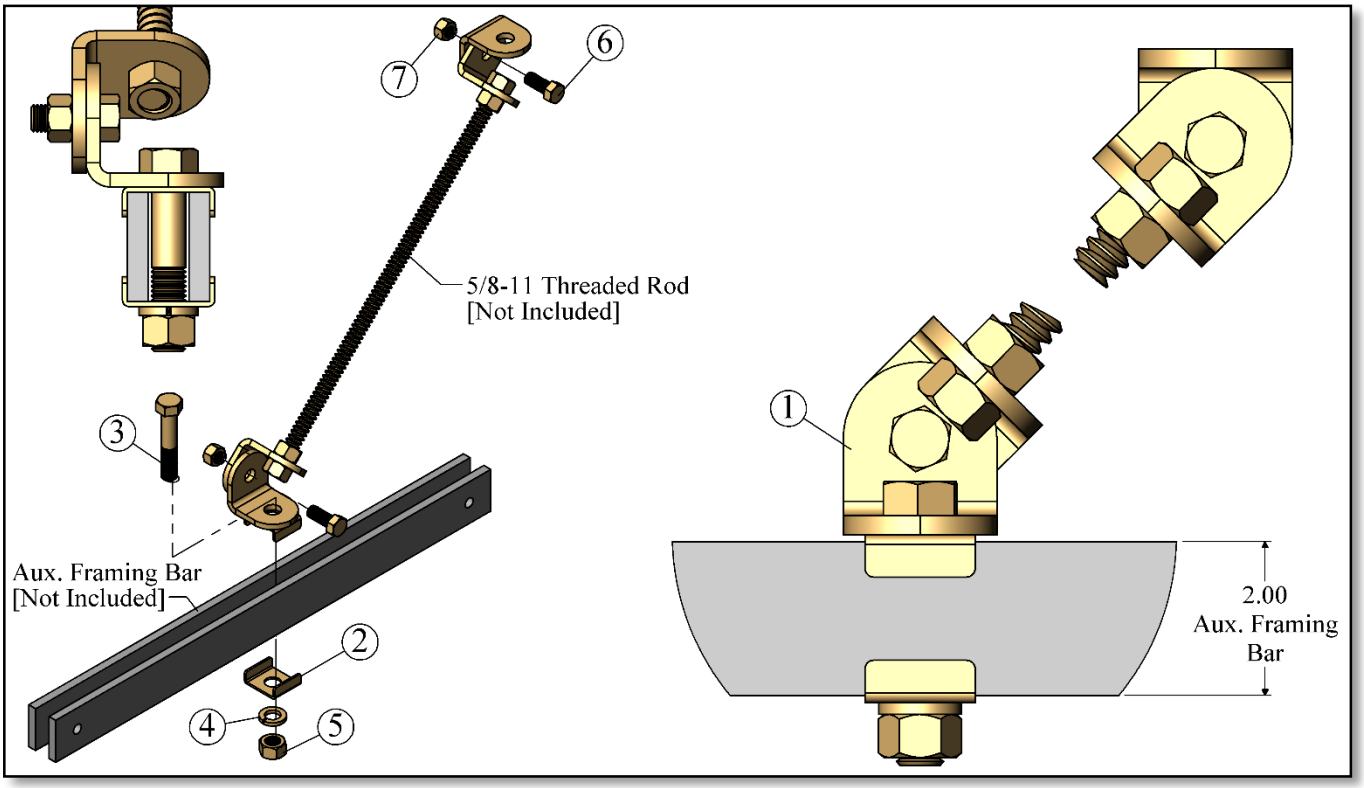

BAF4101 – Auxiliary Framing Bar Brace Kit [Ceiling/ Wall]			
Item	CSF#	QTY	Description
1	BB1	4	Bracing Bracket
2	FC313	2	Framing Clip
3	HH1210	1	5/8-11 HHCS x 3.25” LG. – ZY
4	LW158	1	5/8” Spring Lock Washer - ZY
5	HN148	5	5/8-11 Hex Nut - ZY
6	HH1104	2	1/2-13 HHCS x 1.25” LG. - ZY
7	HN147	2	1/2-13 Hex Nut - ZY

Notes:
Finish Code: Zinc Yellow

RVSD*0317

Specifications subject to change. Please contact CSF Customer Service for more information.

© copyright 2004 Central Steel Fabricators, Inc.
http://www.centralsteelfab.com ◆ 2100 Parkes Drive, Broadview, IL 60155
Phone: 708-652-2037 Fax: 708-652-7010

BAF4102 – Auxiliary Framing Channel Brace Kit [Ceiling / Wall Angle]

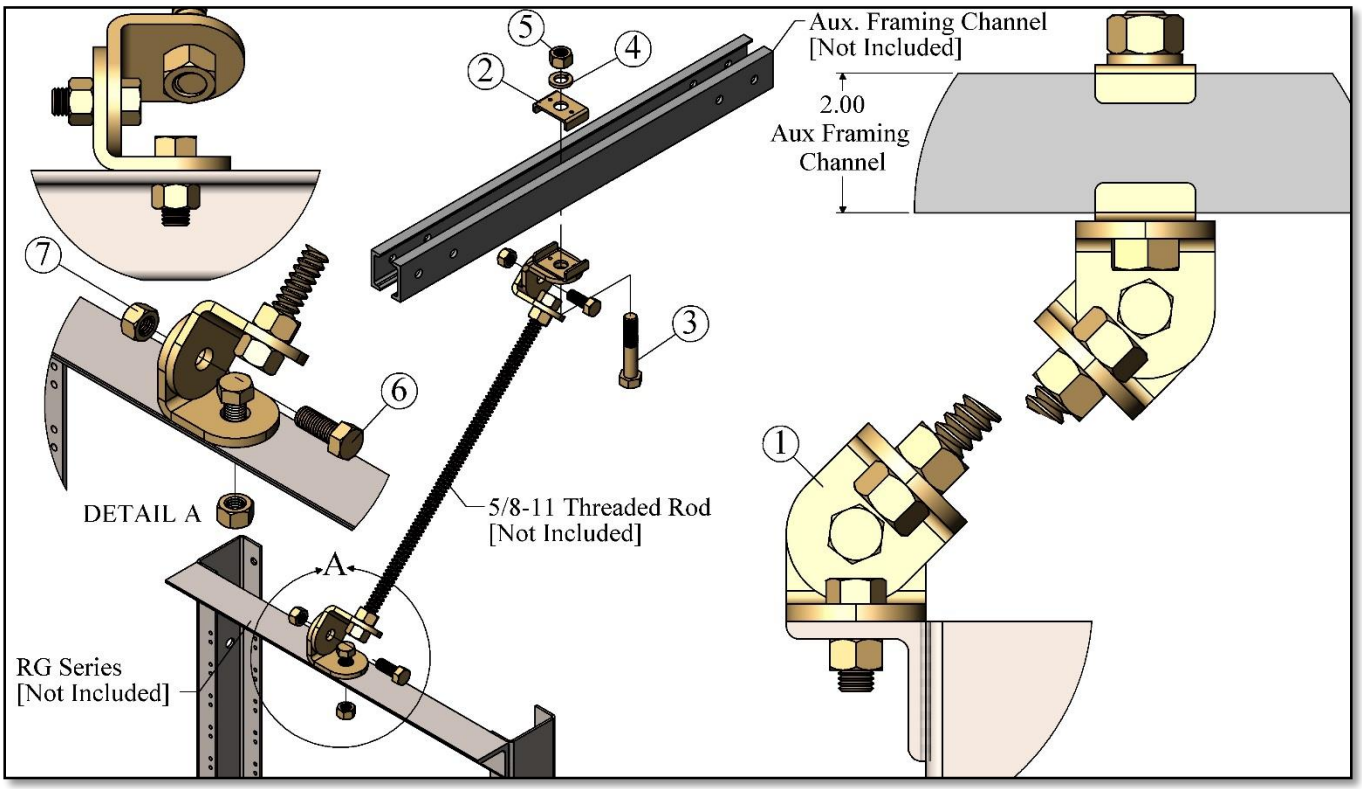

BAF4102 – Auxiliary Framing Channel Brace Kit [Ceiling/ Wall Angle]			
Item	CSF#	QTY	Description
1	BB1	4	Bracing Bracket
2	FC316	2	Framing Clip
3	HH1210	1	5/8-11 HHCS x 3.25” LG. – ZY
4	LW158	1	5/8” Spring Lock Washer - ZY
5	HN148	5	5/8-11 Hex Nut - ZY
6	HH1104	3	1/2-13 HHCS x 1.25” LG. - ZY
7	HN147	3	1/2-13 Hex Nut - ZY

Notes:
Finish Code: Zinc Yellow

RVSD*0317

Specifications subject to change. Please contact CSF Customer Service for more information.
© copyright 2004 Central Steel Fabricators, Inc.
http://www.centralsteelfab.com ◆ 2100 Parkes Drive, Broadview, IL 60155
Phone: 708-652-2037 Fax: 708-652-7010

BRACE AUXILIARY FRAMING TO COLUMNS

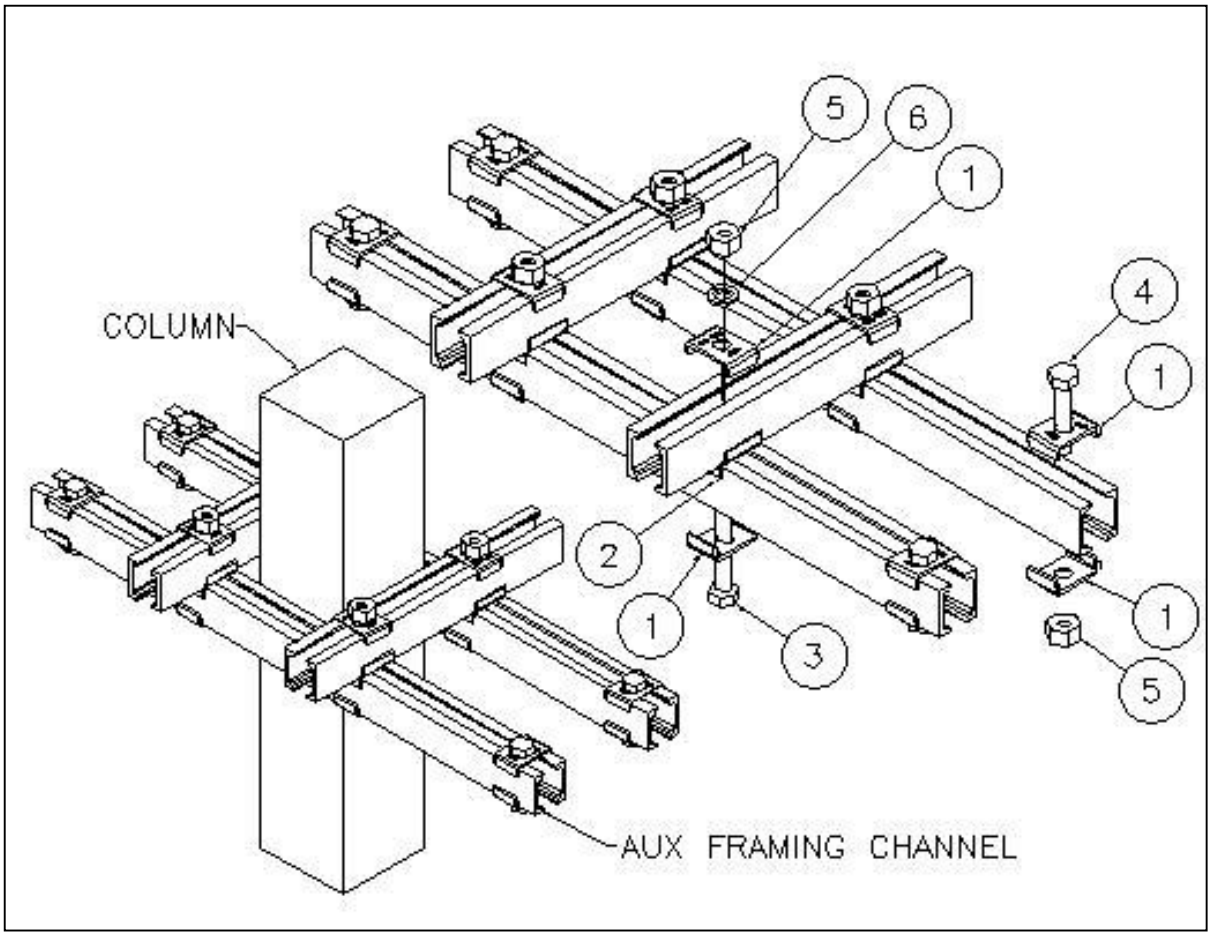

ITEM#	CSF#	BAF3101	BAF3102
1	FC313	16	0
1	FC316	0	16
2	FC323	4	0
2	FC326	0	4
3	HH1215	4	4
4	HH1209	4	4
5	HN148	8	8
6	LW158	8	8

NOTES:
- FINISH: ZINC AND YELLOW
- AUX FRAMING CHANNEL NOT INCLUDED

Specifications subject to change. Please contact CSF Customer Service for more information.
© copyright 2004 Central Steel Fabricators, Inc.
http://www.centralsteelfab.com ◆ 2100 Parkes Drive, Broadview, IL 60155
Phone: 708-652-2037 Fax: 708-652-7010

BAF3801 – Auxiliary Framing Bar Brace Kit

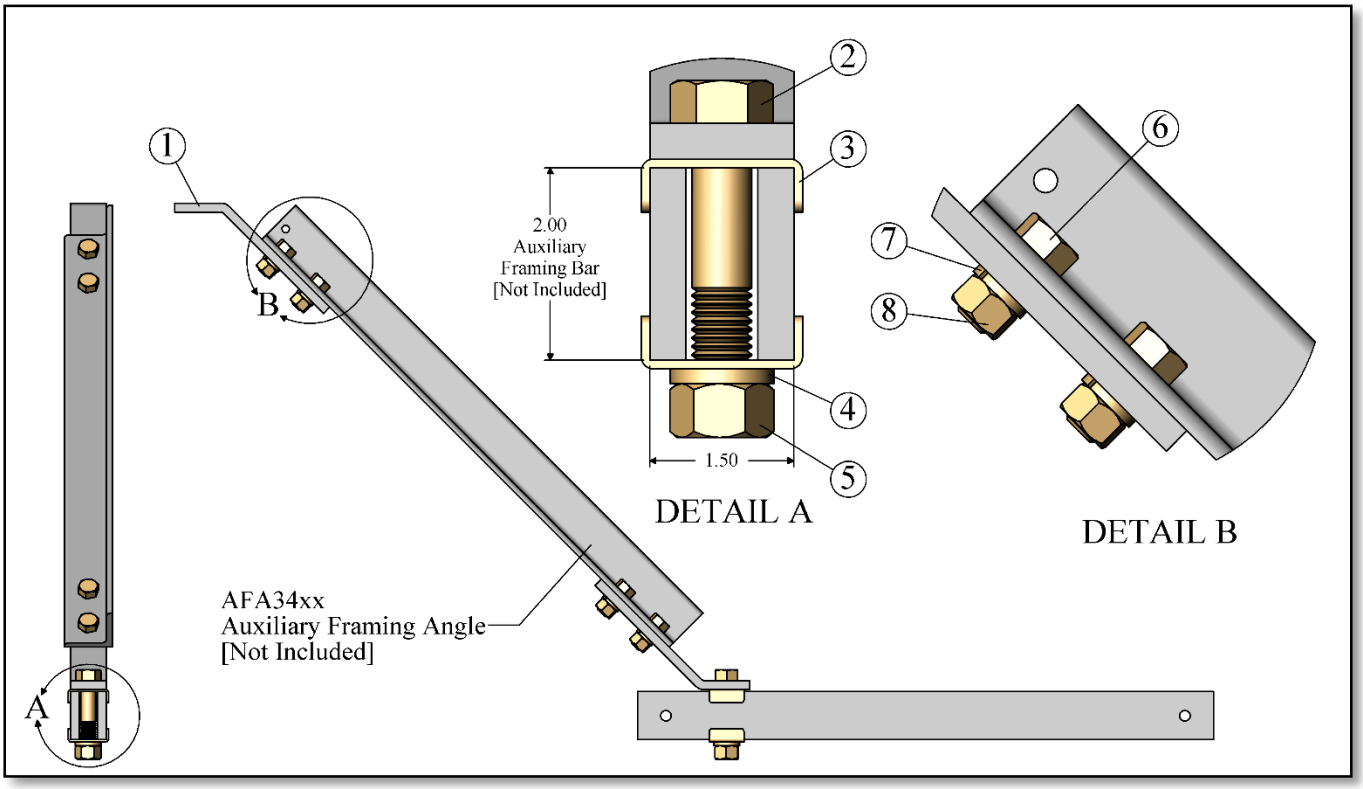

BAF3801 – Auxiliary Framing Bar Brace Kit			
Item#	QTY	CSF P/N#	Description
1	2	A1690	Support Bracket
2	1	HH1210	5/8-11 HHCS x 3.25” LG. – ZY
3	2	FC313	Framing Clip
4	1	LW158	5/8” Spring Lock Washer – ZY
5	1	HN148	5/8-11 Hex Nut –ZY
6	4	HH1104	1/2-13 HHCS x 1.25” LG. – ZY
7	4	LW157	1/2” Spring Lock Washer - ZY
8	4	HN147	1/2-13 Hex Nut - ZY

Notes:
- Finish Code: Zinc and Yellow

RVSD*0617

Specifications subject to change. Please contact CSF Customer Service for more information.

© copyright 2004 Central Steel Fabricators, Inc.
http://www.centralsteelfab.com ◆ 2100 Parkes Drive, Broadview, IL 60155
Phone: 708-652-2037 Fax: 708-652-7010

BAF3802 – Auxiliary Framing Channel Brace Kit

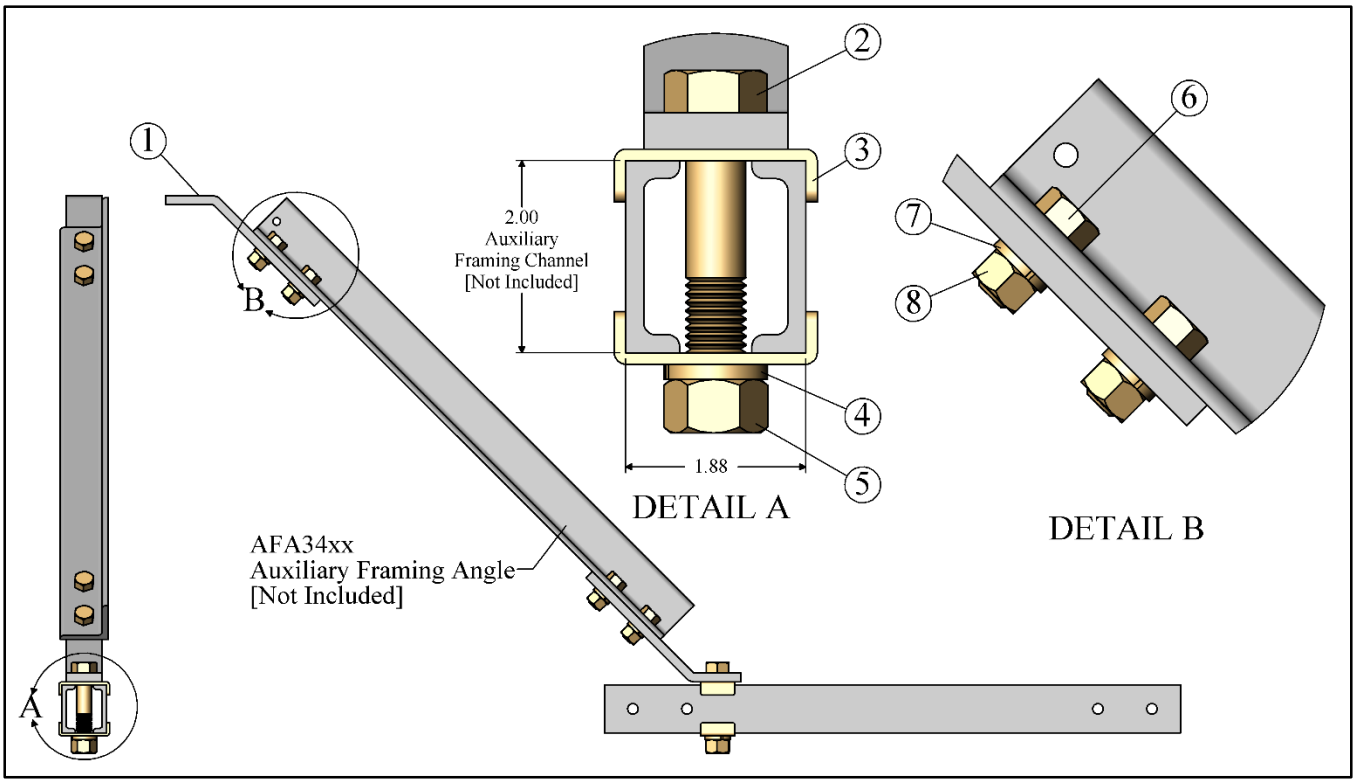

BAF3802 – Auxiliary Framing Channel Brace Kit			
Item#	QTY	CSF P/N#	Description
1	2	A1690	Support Bracket
2	1	HH1210	5/8-11 HHCS x 3.25” LG. – ZY
3	2	FC316	Framing Clip
4	1	LW158	5/8” Spring Lock Washer – ZY
5	1	HN148	5/8-11 Hex Nut –ZY
6	4	HH1104	1/2-13 HHCS x 1.25” LG. – ZY
7	4	LW157	1/2” Spring Lock Washer - ZY
8	4	HN147	1/2-13 Hex Nut - ZY

Notes:
- Finish Code: Zinc and Yellow

RVSD*0617

Specifications subject to change. Please contact CSF Customer Service for more information.

© copyright 2004 Central Steel Fabricators, Inc.
http://www.centralsteelfab.com ◆ 2100 Parkes Drive, Broadview, IL 60155
Phone: 708-652-2037 Fax: 708-652-7010

SBA3802 – Auxiliary Framing Channel Brace Kit

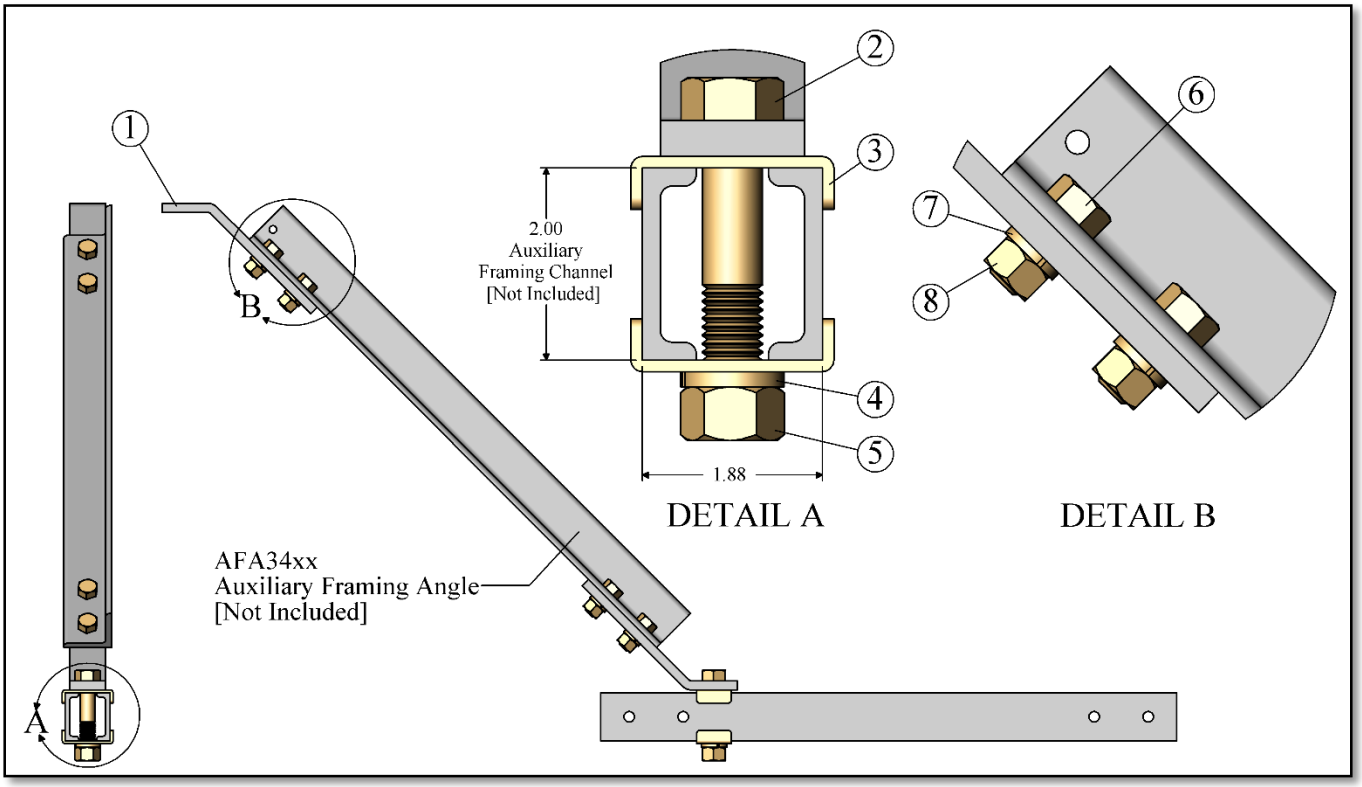

SBA3802 – Auxiliary Framing Channel Brace Kit			
Item#	QTY	CSF P/N#	Description
1	2	A1690	Support Bracket
2	1	HH1211	5/8-11 HHCS x 3.50” LG. – ZY
3	2	FC316	Framing Clip
4	1	LW158	5/8” Spring Lock Washer – ZY
5	1	HN148	5/8-11 Hex Nut –ZY
6	4	HH1104	1/2-13 HHCS x 1.25” LG. – ZY
7	4	LW157	1/2” Spring Lock Washer - ZY
8	4	HN147	1/2-13 Hex Nut - ZY

Notes:
- Finish Code: Zinc and Yellow

RVSD*0617

Specifications subject to change. Please contact CSF Customer Service for more information.

© copyright 2004 Central Steel Fabricators, Inc.
http://www.centralsteelfab.com ◆ 2100 Parkes Drive, Broadview, IL 60155
Phone: 708-652-2037 Fax: 708-652-7010

CAF2901 – Auxiliary Framing Bar Connection Cross Over

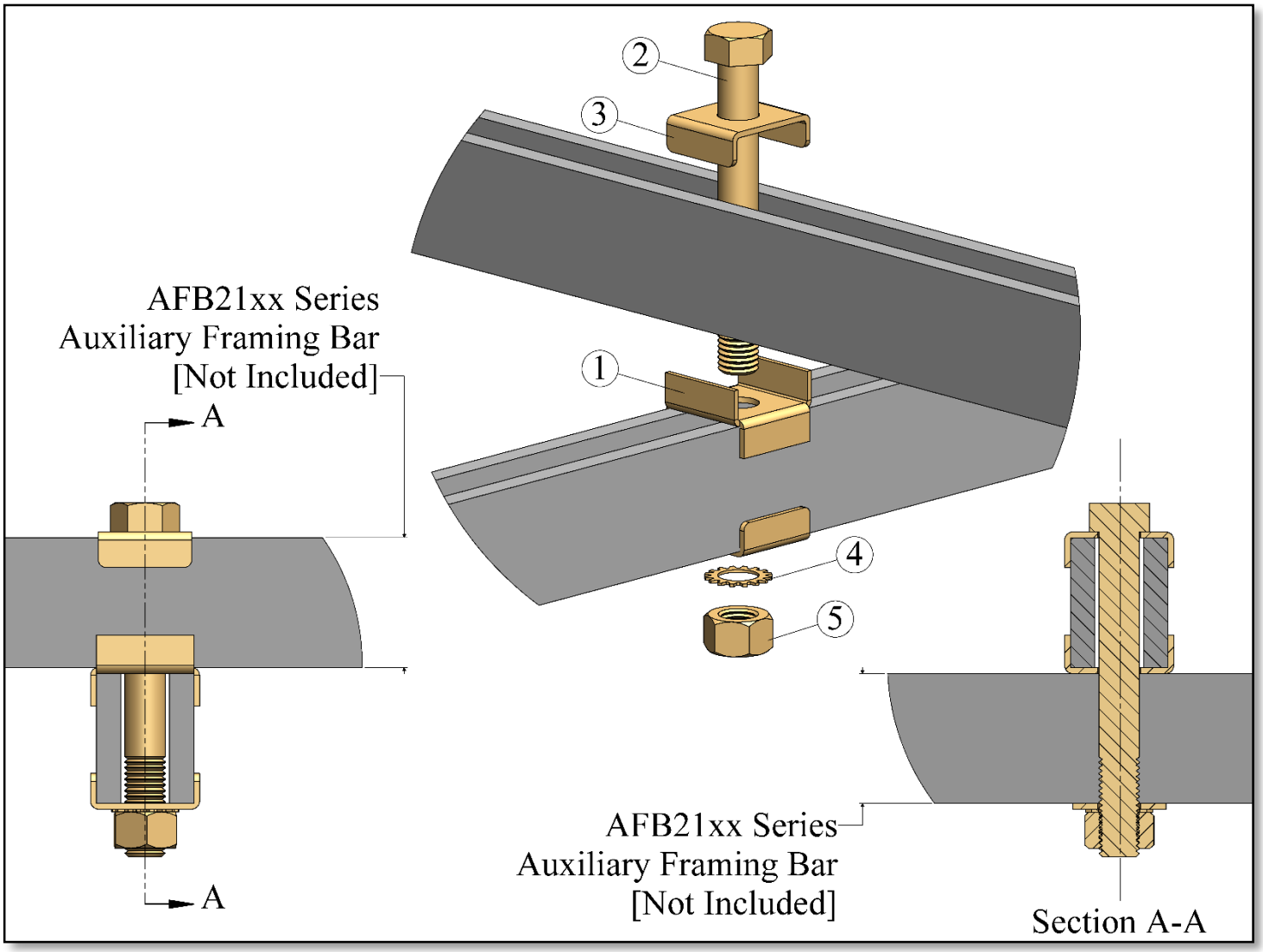

CAF2901 – Auxiliary Framing Bar Connection Cross Over			
Item#	QTY	CSF P/N#	Description
1	1	FC323	Auxiliary Framing Bar Cross Over Clip
2	1	HH1215	5/8-11 Hex Head Cap Screw x 5.00” Lg.
3	2	FC313	Framing Clip
4	1	LWE158	5/8-11 External Tooth Lock Washer
5	1	HN148	5/8-11 Hex Nut

Finish Code: Zinc and Yellow

RVSD*1217

Specifications subject to change. Please contact CSF Customer Service for more information.

© copyright 2004 Central Steel Fabricators, Inc.
http://www.centralsteelfab.com ◆ 2100 Parkes Drive, Broadview, IL 60155
Phone: 708-652-2037 Fax: 708-652-7010

CAF2902 – Auxiliary Framing Channel Connection Cross Over

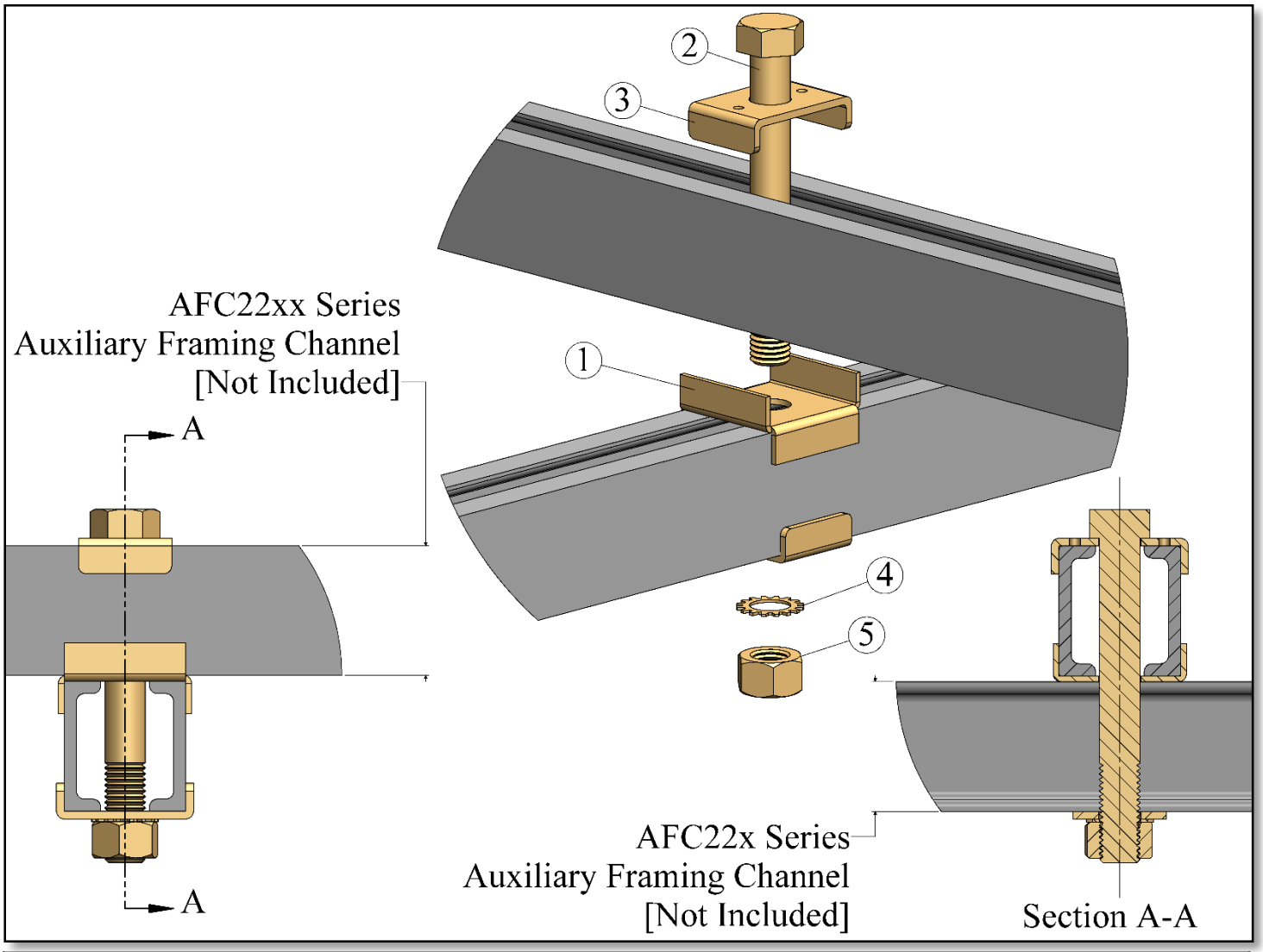

CAF2902 – Auxiliary Framing Channel Connection Cross Over			
Item#	QTY	CSF P/N#	Description
1	1	FC326	Auxiliary Framing Channel Cross Over Clip
2	1	HH1215	5/8-11 Hex Head Cap Screw x 5.00” Lg.
3	2	FC316	Framing Clip
4	1	LWE158	5/8-11 External Tooth Lock Washer
5	1	HN148	5/8-11 Hex Nut

Finish Code: Zinc and Yellow

RVSD*1217

Specifications subject to change. Please contact CSF Customer Service for more information.

© copyright 2004 Central Steel Fabricators, Inc.
http://www.centralsteelfab.com ◆ 2100 Parkes Drive, Broadview, IL 60155
Phone: 708-652-2037 Fax: 708-652-7010

CLIP J-BOLT KIT - CABLE RACK 1.50" TO 1.50" FRAMING BAR

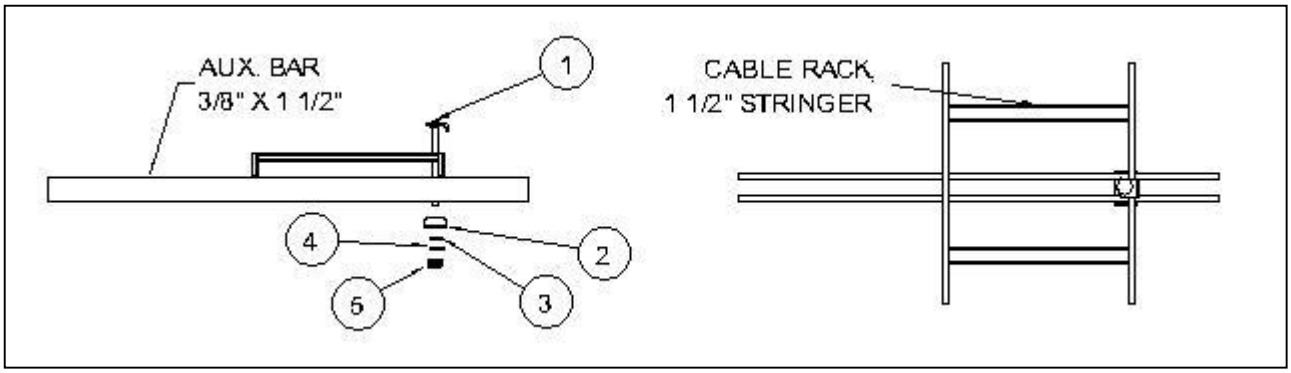

ITEM #	CSF#	QTY
1	CJB3	1
2	FC312	1
3	LWE157	1
4	LW157	1
5	HN147	1

NOTES:
- FINISH: ZINC AND YELLOW
- KIT COMES WITH LWE157 AND LW157

Specifications subject to change. Please contact CSF Customer Service for more information.
© copyright 2004 Central Steel Fabricators, Inc.
http://www.centralsteelfab.com ◆ 2100 Parkes Drive, Broadview, IL 60155
Phone: 708-652-2037 Fax: 708-652-7010

CLIP J-BOLT KIT

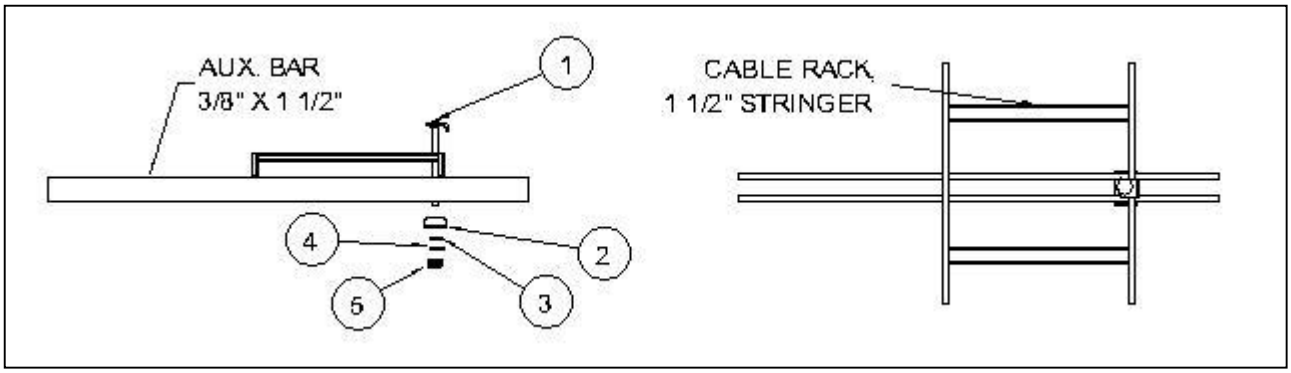

ITEM#	CSF#	CJBAK (1 1/2")	CJB5K (2")
1	CJB4	1	0
1	CJB5	0	1
2	JBC	1	1
3	LWE157	1	1
4	LW157	1	1
5	HN147	1	1

NOTES:

- FINSH: ZINC AND YELLOW

Specifications subject to change. Please contact CSF Customer Service for more information.
© copyright 2004 Central Steel Fabricators, Inc.
http://www.centralsteelfab.com ◆ 2100 Parkes Drive, Broadview, IL 60155
Phone: 708-652-2037 Fax: 708-652-7010

CMB2K CONDUIT MOUNTING BRACKET FROM CABLE RACK

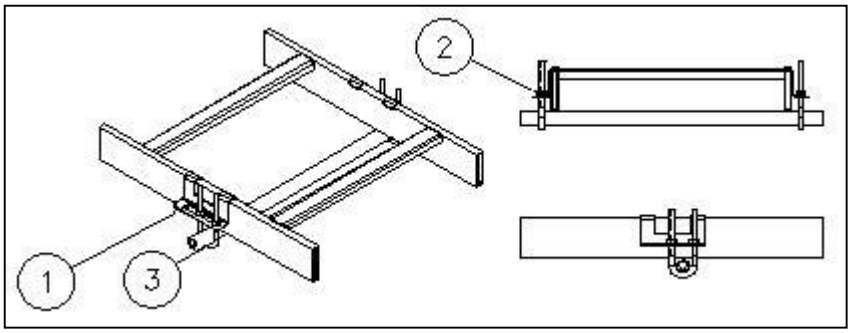

CMB2K		
ITEM#	CSF#	QTY
1	CMB2	2
2	HN144	4
3	UB245	2

NOTES:
-CABLE RACK AND CONDUIT NOT INCLUDED
- FINISH:ZINC AND YELLOW

Specifications subject to change. Please contact CSF Customer Service for more information.
© copyright 2004 Central Steel Fabricators, Inc.
http://www.centralsteelfab.com ◆ 2100 Parkes Drive, Broadview, IL 60155
Phone: 708-652-2037 Fax: 708-652-7010

CMBXXX CONDUIT MOUNTING BRACKET ASSEMBLY

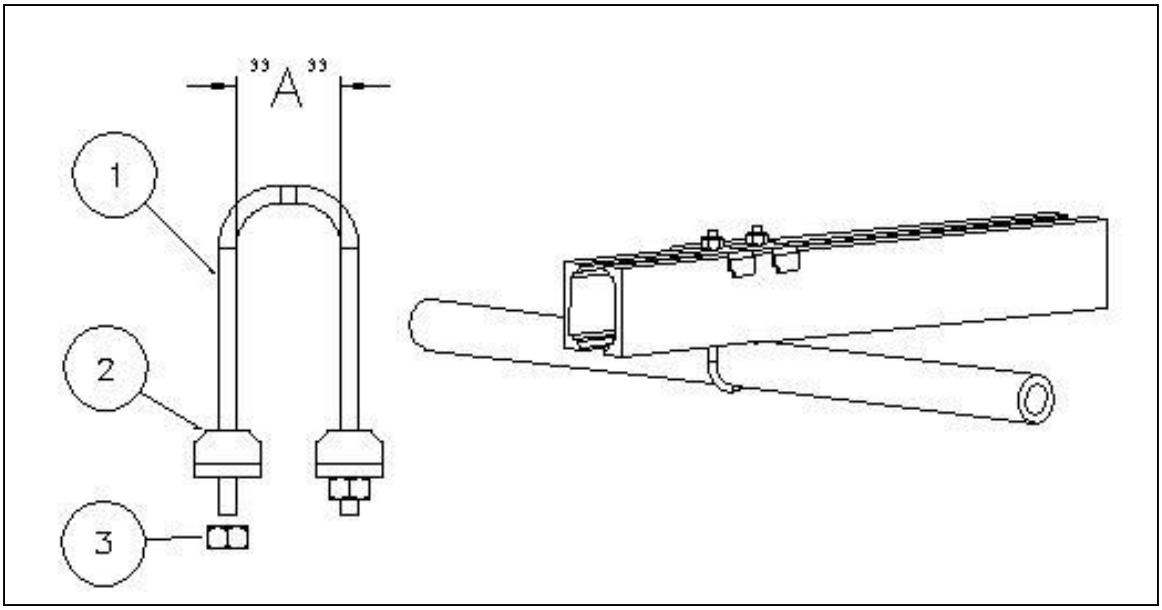

CMBXXX		
CSF #	"A"	ITEM #1
CMB050	1/2"	UB245
CMB075	3/4"	UB246
CMB100	1"	UB247
CMB150	1 1/2"	UB249

HARDWARE		
ITEM#	CSF#	QTY
2	FC414	2
3	HN144	2

NOTES:
- FINISH: ZINC AND YELLOW
- AUX FRAMING AND CONDUIT NOT INCLUDED

RVSD*0414

Specifications subject to change. Please contact CSF Customer Service for more information.

© copyright 2004 Central Steel Fabricators, Inc.
http://www.centralsteelfab.com ◆ 2100 Parkes Drive, Broadview, IL 60155
Phone: 708-652-2037 Fax: 708-652-7010

MOUNTING AUXILIARY FRAMING TO WALL ANGLE

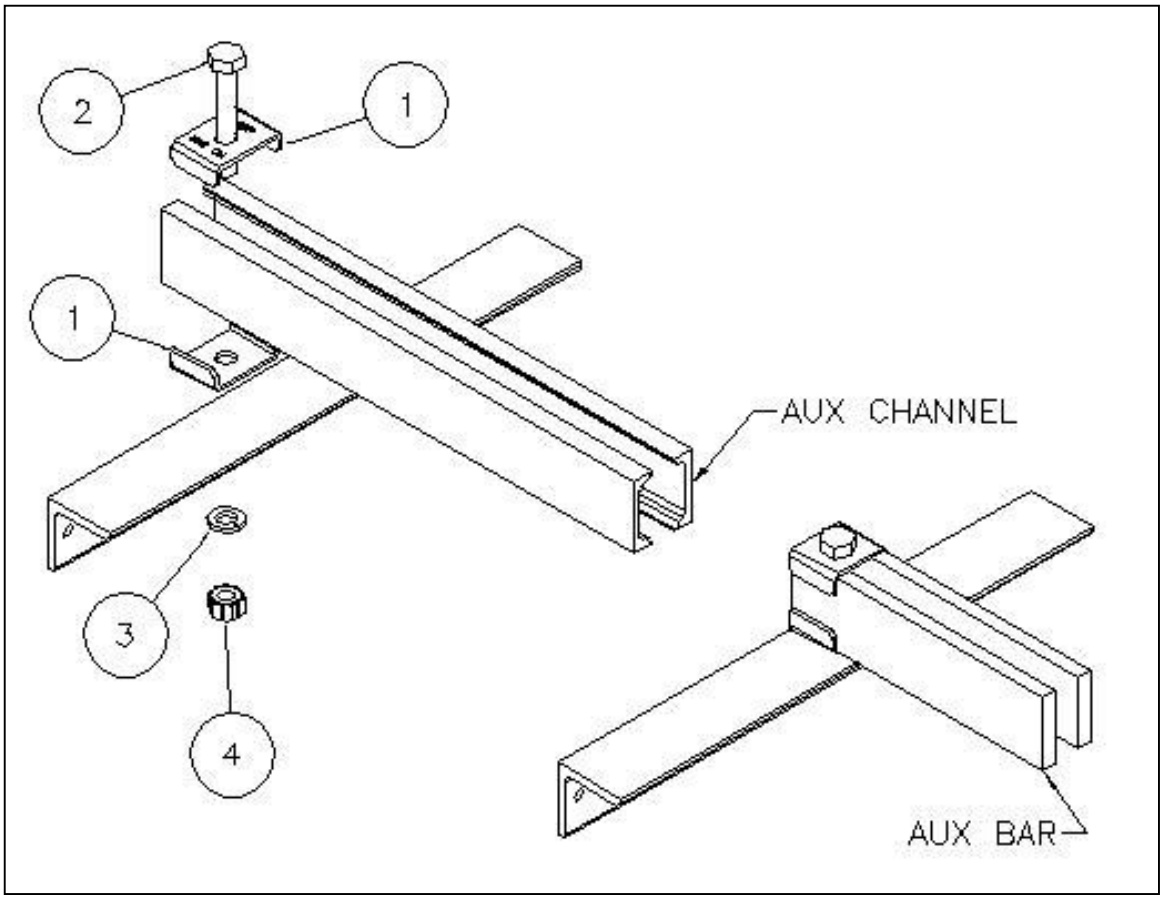

MAF2701 & MAF2702			
ITEM#	CSF#	MAF2701 (BAR)	MAF2702 (CHNL)
1	FC312	2	0
2	FC315	0	2
3	HN1111	1	1
4	LW157	1	1
5	HN147	1	1

NOTES:
- AUX FRAMING AND WALL ANGLE NOT INCLUDED
- FINISH: ZINC AND YELLOW

Specifications subject to change. Please contact CSF Customer Service for more information.
© copyright 2004 Central Steel Fabricators, Inc.
http://www.centralsteelfab.com ◆ 2100 Parkes Drive, Broadview, IL 60155
Phone: 708-652-2037 Fax: 708-652-7010

PS42XX Series – Pipe Stand [1 Level] Auxiliary Framing Channel

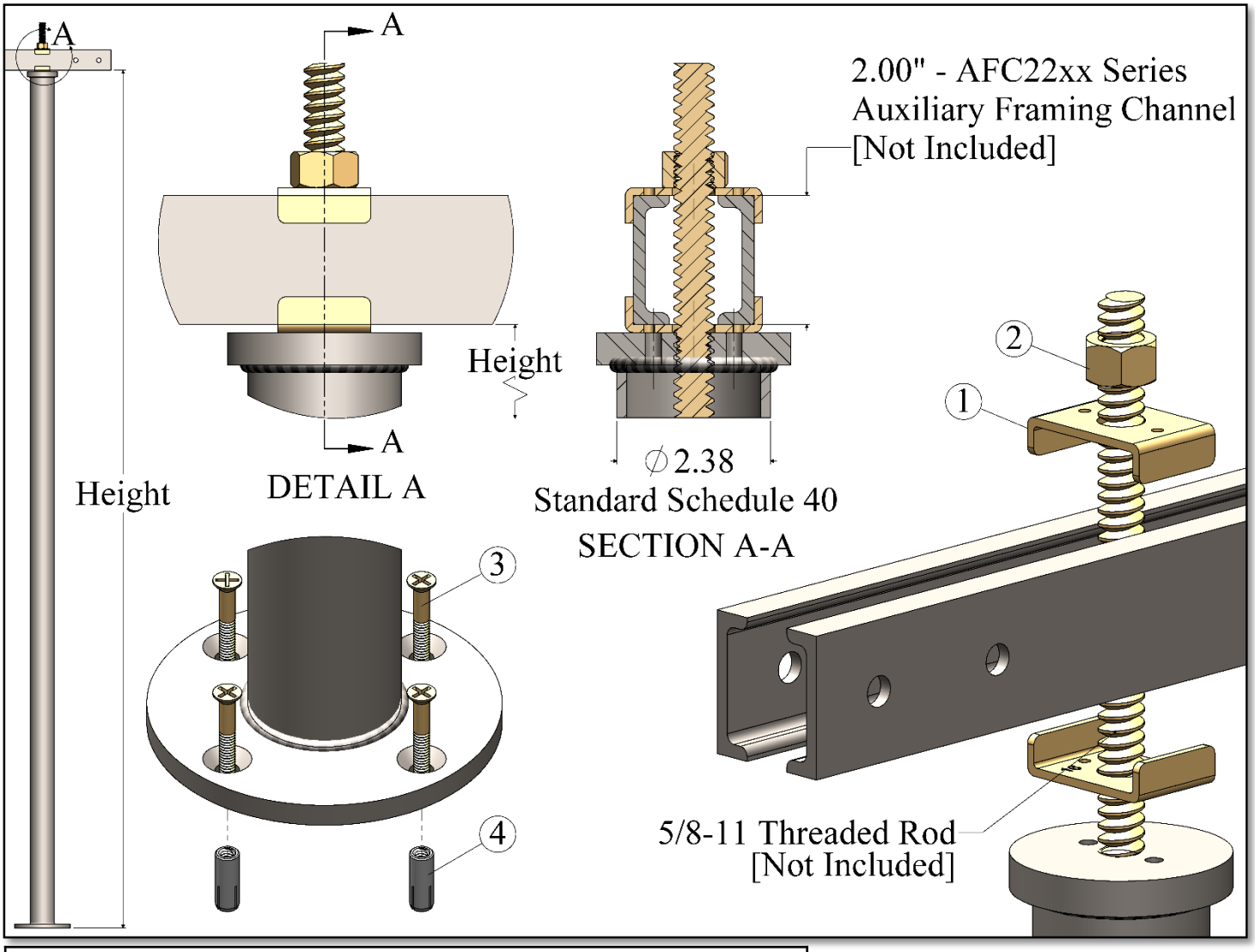

PS42xx Series – Pipe Stand [1 Level] Auxiliary Framing Channel		
CSF P/N#	Height	Description
PS4207	7'-0"	Pipe Stand - Auxiliary Framing Channel
PS4208	7'-6"	Pipe Stand - Auxiliary Framing Channel
PS4209	8'-0"	Pipe Stand - Auxiliary Framing Channel
PS4210	9'-0"	Pipe Stand - Auxiliary Framing Channel
PS4211	11'-6"	Pipe Stand - Auxiliary Framing Channel

Installation Hardware Kit – B.O.M			
PS42xx Series – Pipe Stand [1 Level] Auxiliary Framing Channel			
Item	CSF P/N#	Description	QTY
1	FC316	Framing Clip [5/8" Hardware] - ZY	2
2	HN148	5/8-11 Hex Nut – ZY	3
3	FH0710	1/4-20 Flat Head x 1.75" Lg. - ZY	4
4	DIA25	1/4-20 x 1.00" Lg. – Drop In Anchor	4

Note:
- Kits includes all mounting hardware for framing clips.
- PS Series defaults to: Telco Gray DG Finish.
- See tech data for paint codes.

RVSD*1217

Specifications subject to change. Please contact CSF Customer Service for more information.

© copyright 2004 Central Steel Fabricators, Inc.
http://www.centralsteelfab.com ◆ 2100 Parkes Drive, Broadview, IL 60155
Phone: 708-652-2037 Fax: 708-652-7010

PS43XX Series – Pipe Stand [2 Level] Auxiliary Framing Channel

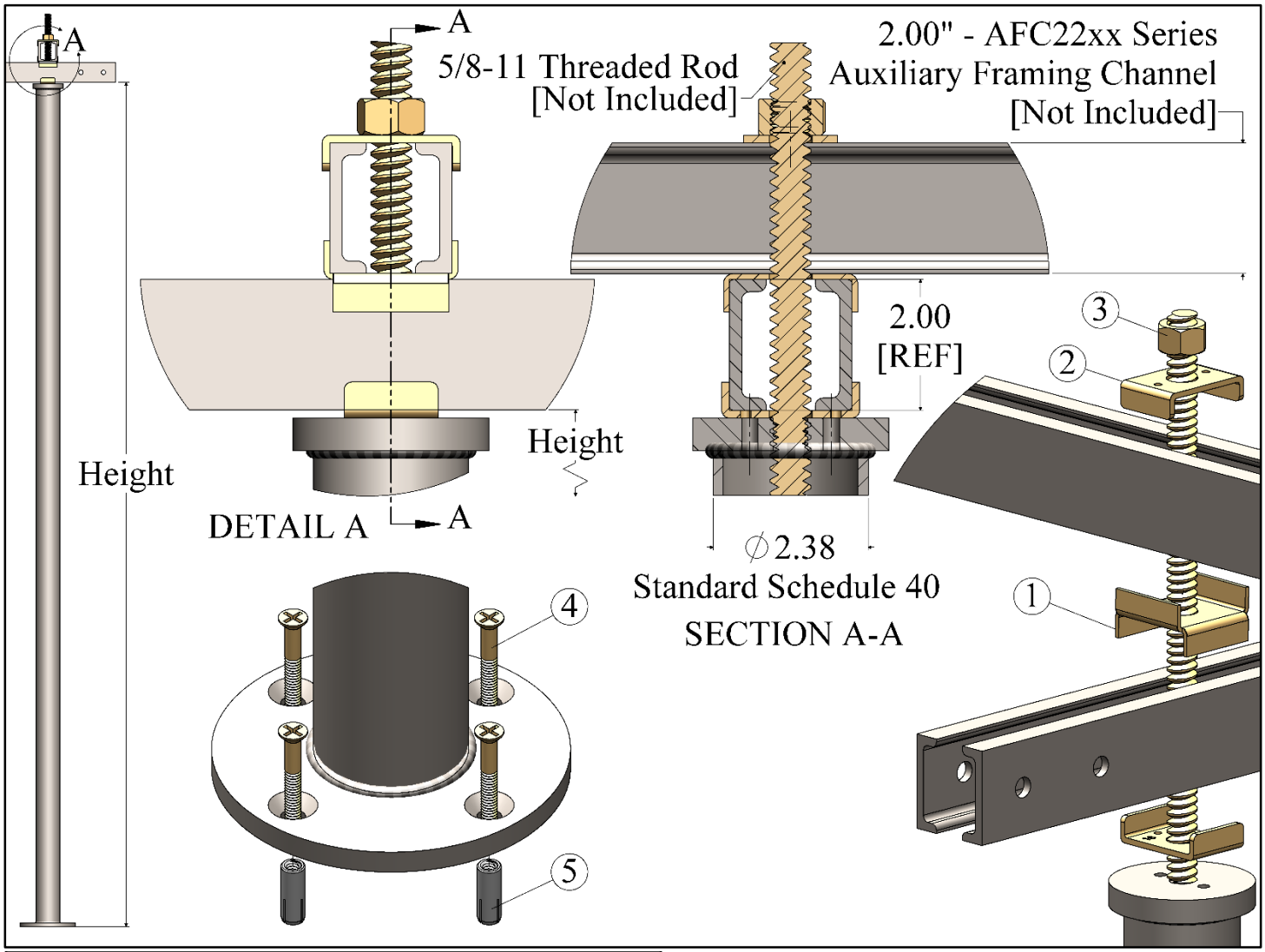

PS43xx Series – Pipe Stand [2 Levels] Auxiliary Framing Channel		
CSF P/N#	Height	Description
PS4307	7'-0"	Pipe Stand - Auxiliary Framing Channel
PS4308	7'-6"	Pipe Stand - Auxiliary Framing Channel
PS4309	8'-0"	Pipe Stand - Auxiliary Framing Channel
PS4310	9'-0"	Pipe Stand - Auxiliary Framing Channel
PS4311	11'-6"	Pipe Stand - Auxiliary Framing Channel

Installation Hardware Kit – B.O.M			
PS43xx Series – Pipe Stand [2 Level] Auxiliary Framing Channel			
Item	CSF P/N#	DESCRIPTION	QTY
1	FC326	Framing Clip [5/8" Hardware] Crossover- ZY	1
2	FC316	Framing Clip [5/8" Hardware] - ZY	2
3	HN148	5/8-11 Hex Nut – ZY	3
4	FH0710	1/4-20 Flat Head x 1.75" Lg. - ZY	4
5	DIA25	1/4-20 x 1.00" Lg. – Drop In Anchor	4

Note:
- Kits includes all mounting hardware for framing clips.
- PS Series defaults to: Telco Gray DG Finish.
- See tech data for paint codes.

RVSD*1217

CSF Customer Service for more information.

© copyright 2004 Central Steel Fabricators, Inc.
http://www.centralsteelfab.com ◆ 2100 Parkes Drive, Broadview, IL 60155
Phone: 708-652-2037 Fax: 708-652-7010

PS42XX Series – Pipe Stand [1 Level] Auxiliary Framing Bar

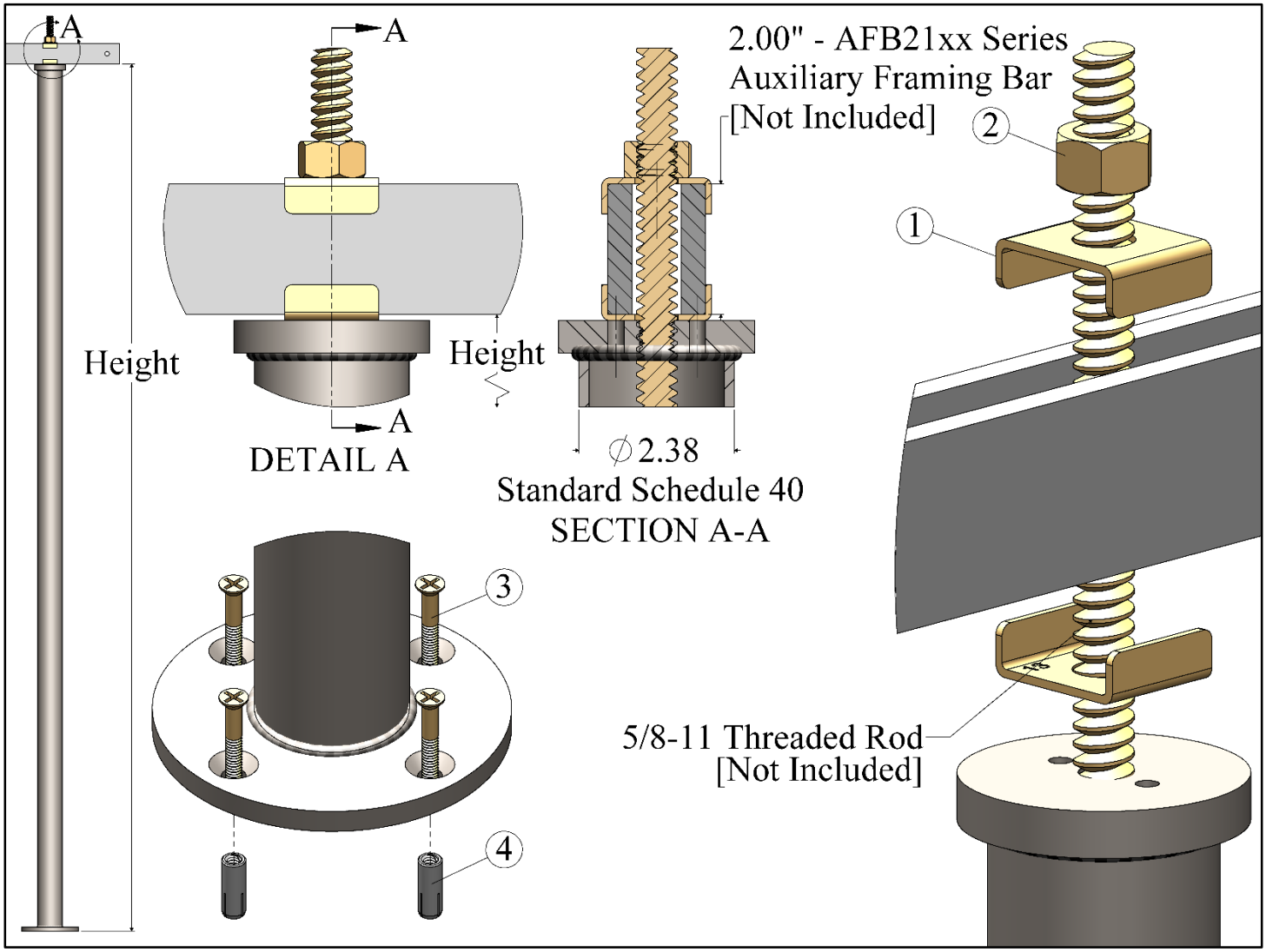

PS42xx Series – Pipe Stand [1 Level] Auxiliary Framing Bar		
CSF P/N#	Height	Description
PS4201	7'-0"	Pipe Stand - Auxiliary Framing Bar
PS4202	7'-6"	Pipe Stand - Auxiliary Framing Bar
PS4203	8'-0"	Pipe Stand - Auxiliary Framing Bar
PS4204	9'-0"	Pipe Stand - Auxiliary Framing Bar
PS4205	11'-6"	Pipe Stand - Auxiliary Framing Bar

Installation Hardware Kit – B.O.M			
PS42xx Series – Pipe Stand [1 Level] Auxiliary Framing Bar			
Item	CSF P/N#	Description	QTY
1	FC313	Framing Clip [5/8" Hardware] - ZY	2
2	HN148	5/8-11 Hex Nut – ZY	3
3	FH0710	1/4-20 Flat Head x 1.75" Lg. - ZY	4
4	DIA25	1/4-20 x 1.00" Lg. – Drop In Anchor	4

Note:
- Kits includes all mounting hardware for framing clips.
- PS Series defaults to: Telco Gray DG Finish.
- See tech data for paint codes.

RVSD*1217

Specifications subject to change. Please contact CSF Customer Service for more information.

© copyright 2004 Central Steel Fabricators, Inc.
http://www.centralsteelfab.com ◆ 2100 Parkes Drive, Broadview, IL 60155
Phone: 708-652-2037 Fax: 708-652-7010

PS43XX Series – Pipe Stand [2 Level] Auxiliary Framing Bar

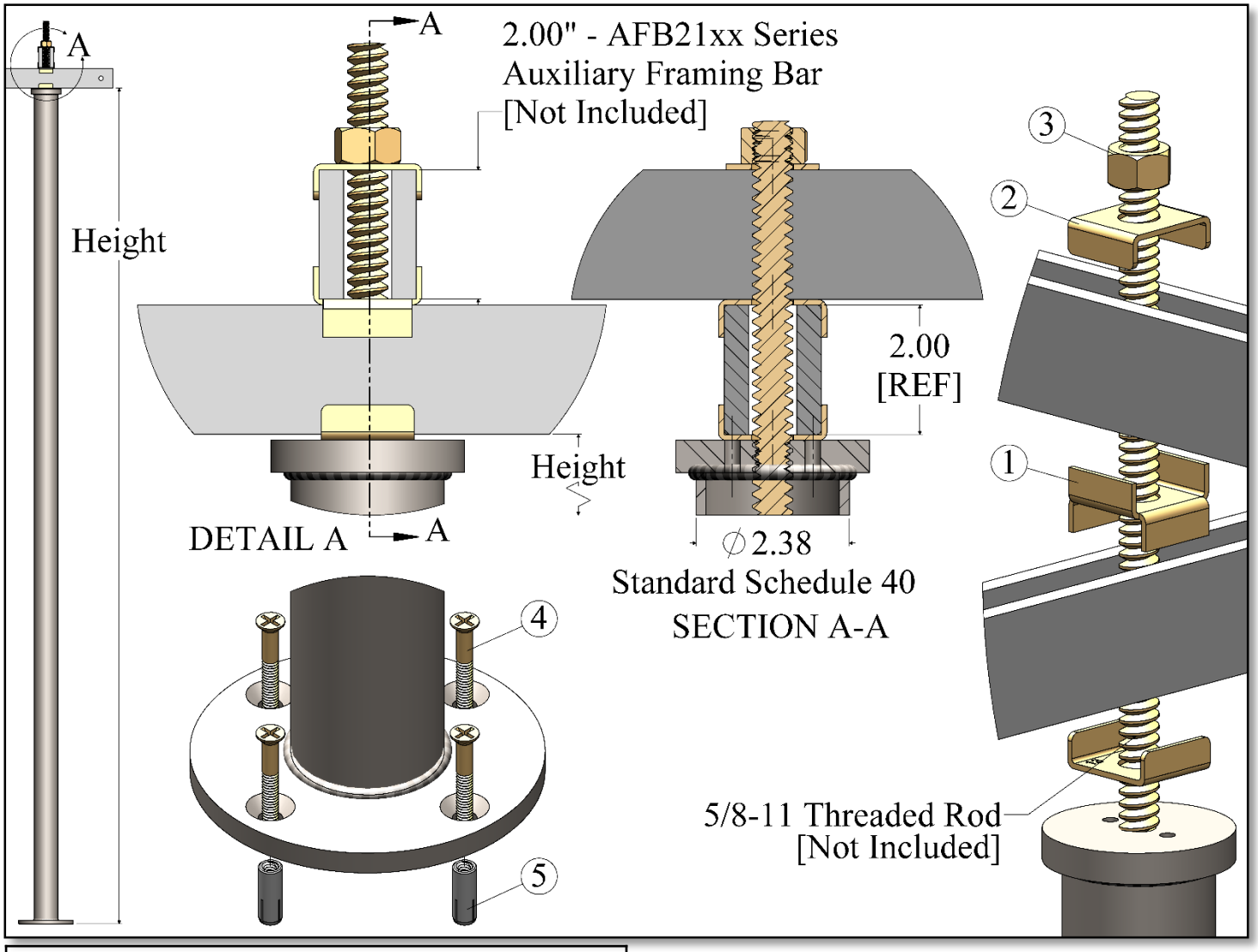

PS43xx Series – Pipe Stand [2 Level] Auxiliary Framing Bar		
CSF P/N#	Height	Description
PS4301	7'-0"	Pipe Stand - Auxiliary Framing Bar
PS4302	7'-6"	Pipe Stand - Auxiliary Framing Bar
PS4303	8'-0"	Pipe Stand - Auxiliary Framing Bar
PS4304	9'-0"	Pipe Stand - Auxiliary Framing Bar
PS4305	11'-6"	Pipe Stand - Auxiliary Framing Bar

Installation Hardware Kit – B.O.M			
PS43xx Series – Pipe Stand [2 Level] Auxiliary Framing Bar			
Item	CSF P/N#	Description	QTY
1	FC323	Framing Clip [5/8" Hardware] Crossover - ZY	1
1	FC313	Framing Clip [5/8" Hardware] - ZY	2
2	HN148	5/8-11 Hex Nut – ZY	3
3	FH0710	1/4-20 Flat Head x 1.75" Lg. - ZY	4
4	DIA25	1/4-20 x 1.00" Lg. – Drop In Anchor	4

Note:
- Kits includes all mounting hardware for framing clips.
- PS Series defaults to: Telco Gray DG Finish.
- See tech data for paint codes.

RVSD*1217

ct CSF Customer Service for more information.

© copyright 2004 Central Steel Fabricators, Inc.
http://www.centralsteelfab.com ◆ 2100 Parkes Drive, Broadview, IL 60155
Phone: 708-652-2037 Fax: 708-652-7010

2PFL-D - Pipe Floor Flange [Pre Drill Template]

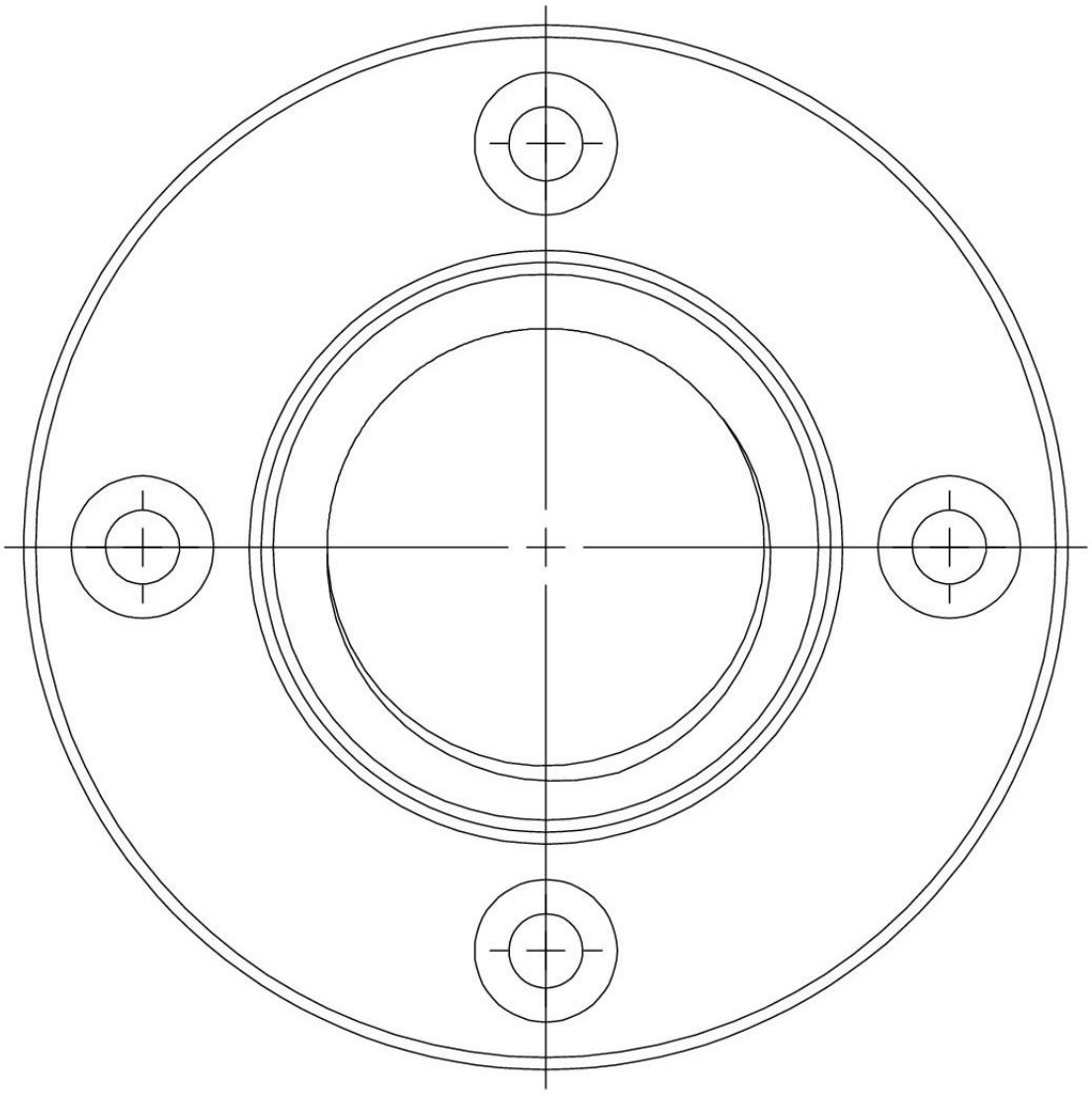

2PFL-D – Pipe Floor Flange		
CSF P/N#	Material	DESCRIPTION
2PFL-D	Cast Iron	2.00” Pipe Floor Flange for PS42xx and PS43xx Series

Note:
- The 2PFL-D illustration above is 1:1 scale when printed: letter [8.50 x 11.00] layout
- Once printed each countersunk hole should be 4.25” offset.

Specifications subject to change. Please contact CSF Customer Service for more information.
© copyright 2004 Central Steel Fabricators, Inc.
http://www.centralsteelfab.com ◆ 2100 Parkes Drive, Broadview, IL 60155
Phone: 708-652-2037 Fax: 708-652-7010

PSE SERIES PIPE STAND SEISMIC

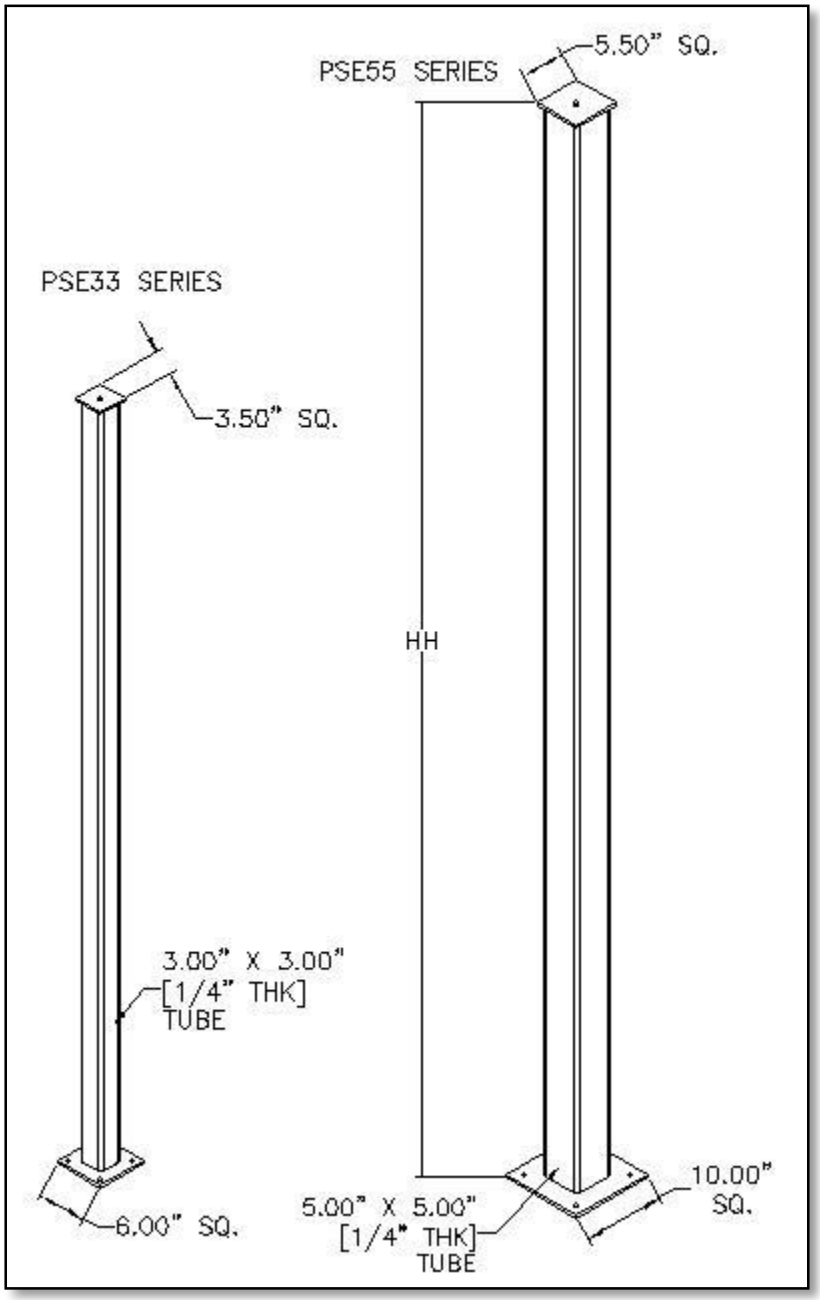

PSE33HHHXX	
CSF#	HHH
PSE33094XX	94.00"
PSE33105XX	105.00"

PSE55HHHXX	
CSF#	HHH
PSE55084XX	84.00"
PSE55112XX	112.00"
PSE55118XX	118.00"
PSE55132XX	132.00"
PSE55138XX	138.00"

NOTES:

- MOUNTING HOLES IN BASE ARE DIA. .75
- ORDER FLOOR MOUNTING HARDWARE SEPARATELY
- TUBE WALL THICKNESS .25"
- FINISH: SEE TECH DATA FOR PAINT CODES
- OTHER SIZES AND FINISHED AVAILABLE UPON REQUEST

RVSD*0612

Specifications subject to change. Please contact CSF Customer Service for more information.

© copyright 2004 Central Steel Fabricators, Inc.
http://www.centralsteelfab.com ◆ 2100 Parkes Drive, Broadview, IL 60155
Phone: 708-652-2037 Fax: 708-652-7010

PS5312xx – Adjustable Pipe Stand

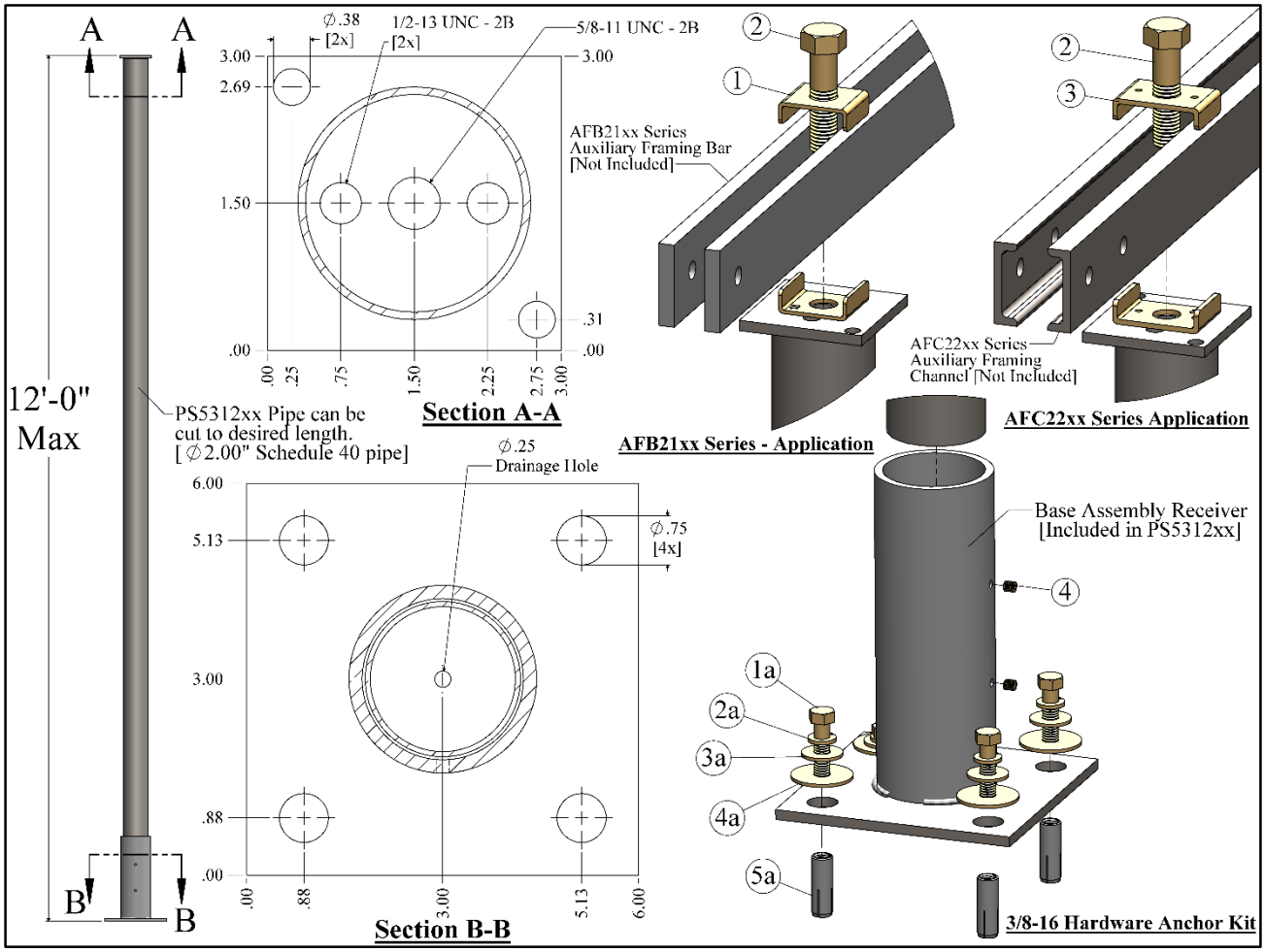

PS53 - Hardware Kit [Included in PS5312xx]			
Item#	QTY	CSF P/N#	Description
1	2	FC313	Framing Clip [AFB21xx Series Application]
2	1	HH1207	5/8-11 Hex Head Cap Screw x 2.50” LG.
3	2	FC316	Framing Clip [AFC22xx Series Application]
4	2	SS0600	Socket Set Screw - 1/4-20 x 1/4” LG.
5	2	HN148	5/8-11 Hex Nut [Not Shown]

DIA37K02 – Drop In Anchor Kit [3/8” Hardware] – [Included in PS5312xx]			
Item#	QTY	CSF P/N#	Description
1a	4	HH1007	3/8-16 Hex Head Cap Screw x 1.50” LG.
2a	4	LW156	3/8” Spring Lock Washer
3a	4	FW166	3/8” Flat Washer [1.00” O.D.]
4a	4	FW166F	3/8” Flat Washer [1.50” O.D.]
5a	4	DIA37	3/8-16 Drop In Anchor

© copyright 2004 Central Steel Fabricators, Inc.
http://www.centralsteelfab.com ◆ 2100 Parkes Drive, Broadview, IL 60155
Phone: 708-652-2037 Fax: 708-652-7010

SPLICE KIT FOR AUXILIARY CHANNEL- 2.00" X 1.00"

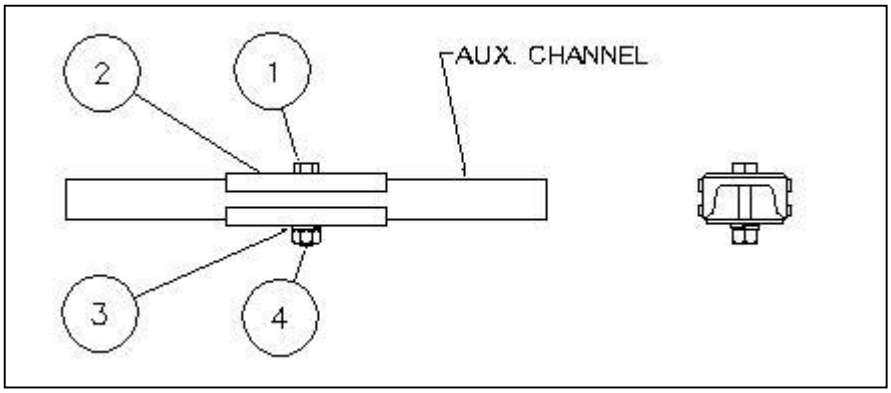

SAC0501		
ITEM#	CSF#	QTY
1	HH1008	1
2	A1595	2
3	LW156	1
4	HN146	1

NOTES:
- FINISH: ZINC AND YELLOW

Specifications subject to change. Please contact CSF Customer Service for more information.
© copyright 2004 Central Steel Fabricators, Inc.
http://www.centralsteelfab.com ◆ 2100 Parkes Drive, Broadview, IL 60155
Phone: 708-652-2037 Fax: 708-652-7010

SUPPORT AUXILIARY FRAMING

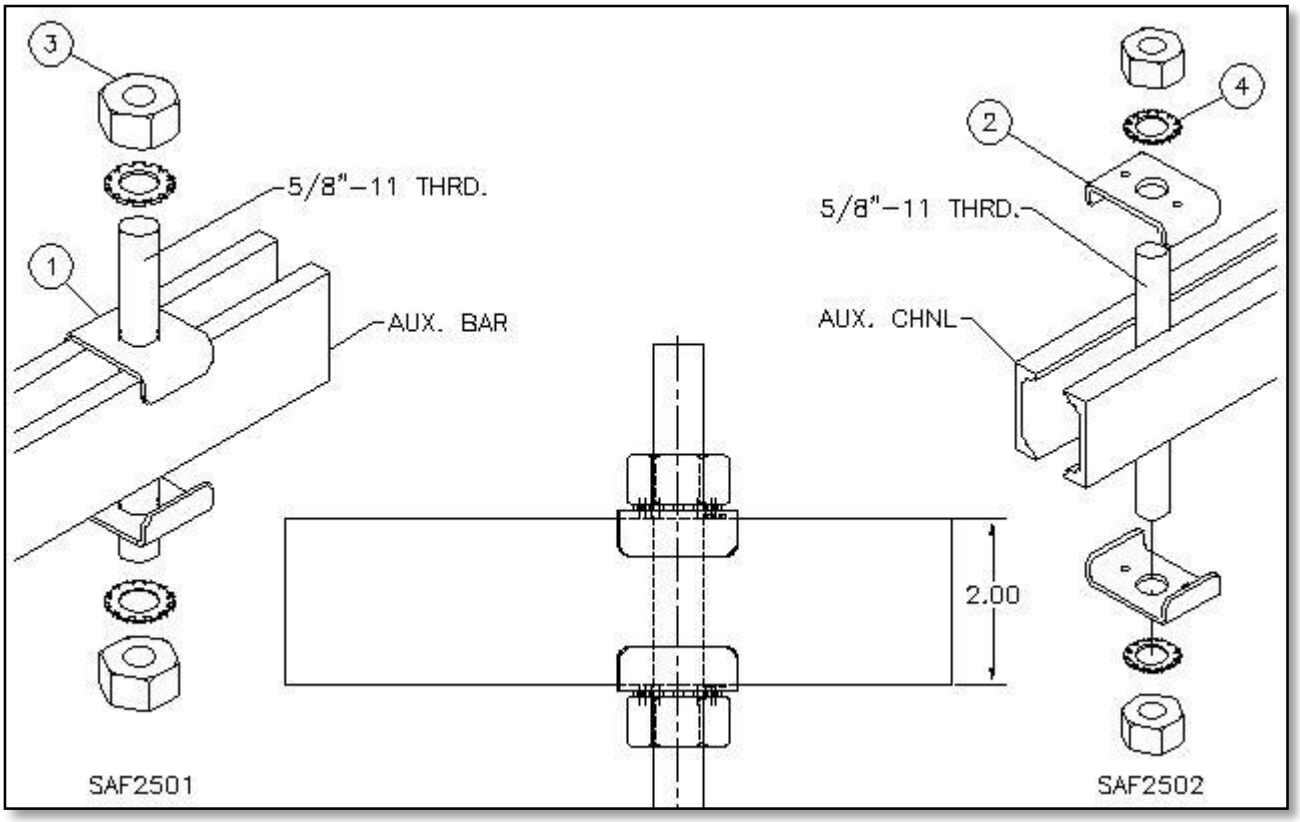

ITEM#	CSF#	SAF2501 (BAR)	SAF2502 (CHNL)
1	FC313	2	0
2	FC316	0	2
3	HN148	2	2
4	LWE158	2	2
5	LW158	2	2

NOTES:

- FINISH: ZINC AND YELLOW
- EITHER LOCK WASHER CAN BE USED IN INSTALLATION

RVSD*0113

Specifications subject to change. Please contact CSF Customer Service for more information.
© copyright 2004 Central Steel Fabricators, Inc.
http://www.centralsteelfab.com ◆ 2100 Parkes Drive, Broadview, IL 60155
Phone: 708-652-2037 Fax: 708-652-7010

SAF2601 – Auxiliary Framing Bar Support Cross Over

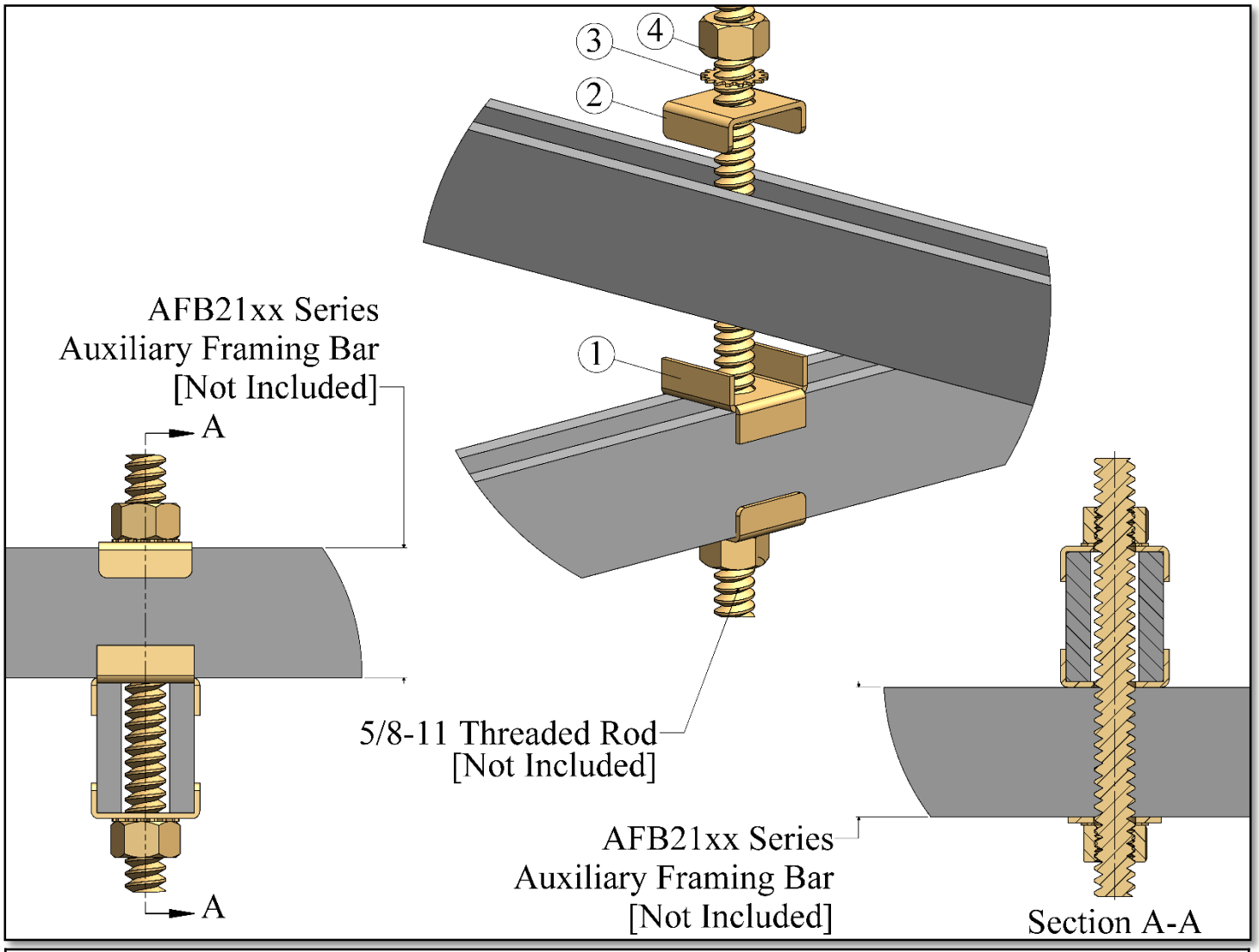

SAF2601 – Auxiliary Framing Bar Support Cross Over			
Item#	QTY	CSF P/N#	Description
1	1	FC323	Auxiliary Framing Bar Cross Over Clip
2	2	FC313	Framing Clip
3	2	LWE158	5/8” External Tooth Lock Washer
4	2	HN148	5/8-11 Hex Nut

Finish Code: Zinc and Yellow

RVSD*1217

Specifications subject to change. Please contact CSF Customer Service for more information.

© copyright 2004 Central Steel Fabricators, Inc.
http://www.centralsteelfab.com ◆ 2100 Parkes Drive, Broadview, IL 60155
Phone: 708-652-2037 Fax: 708-652-7010

SAF2602 – Auxiliary Framing Channel Support Cross Over

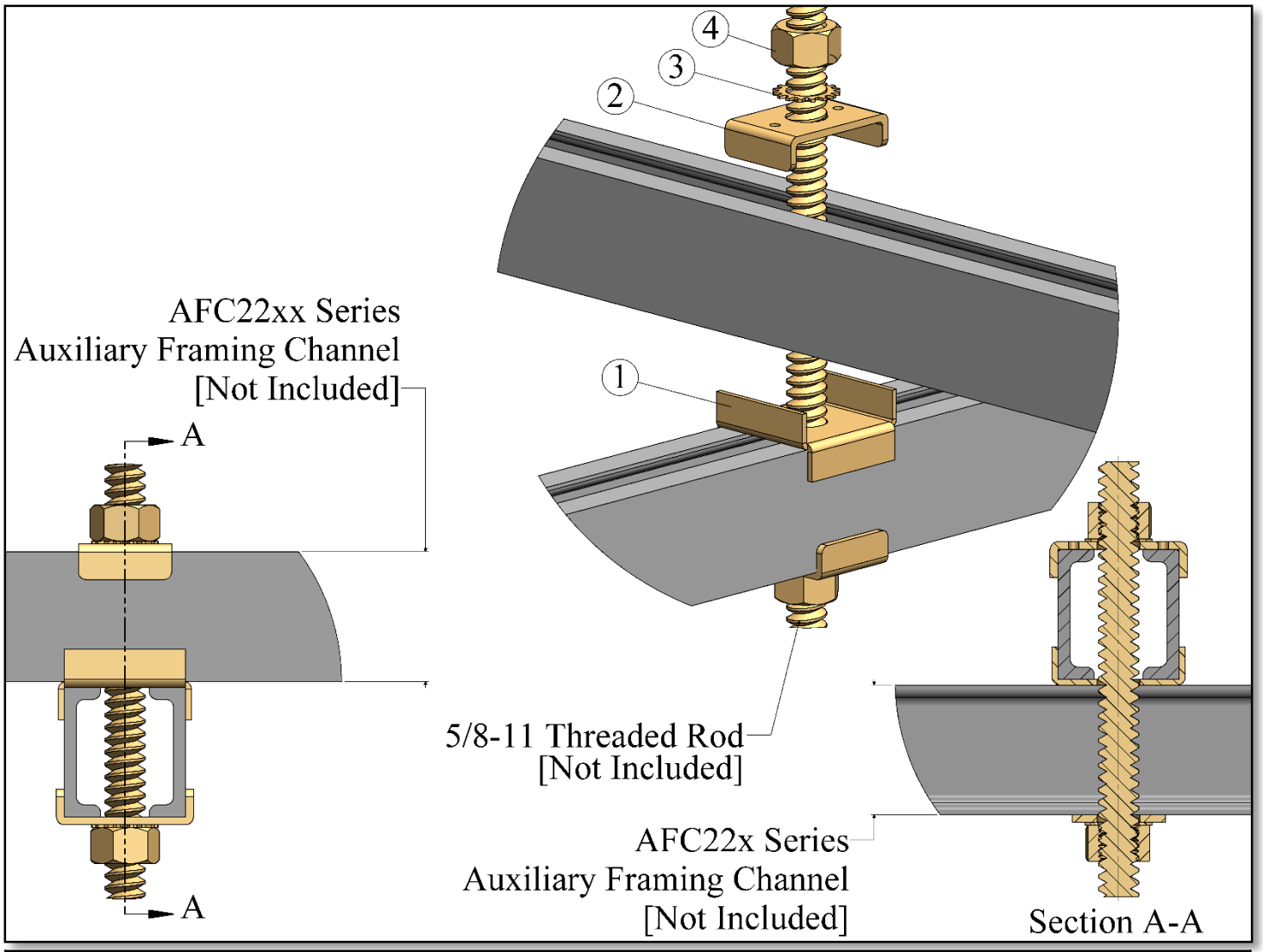

SAF2601 – Auxiliary Framing Channel Support Cross Over			
Item#	QTY	CSF P/N#	Description
1	1	FC326	Auxiliary Framing Channel Cross Over Clip
2	2	FC316	Framing Clip
3	2	LWE158	5/8” External Tooth Lock Washer
4	2	HN148	5/8-11 Hex Nut

Finish Code: Zinc and Yellow

RVSD*1217

Specifications subject to change. Please contact CSF Customer Service for more information.

© copyright 2004 Central Steel Fabricators, Inc.
http://www.centralsteelfab.com ◆ 2100 Parkes Drive, Broadview, IL 60155
Phone: 708-652-2037 Fax: 708-652-7010

SPLICE AUXILIARY FRAMING

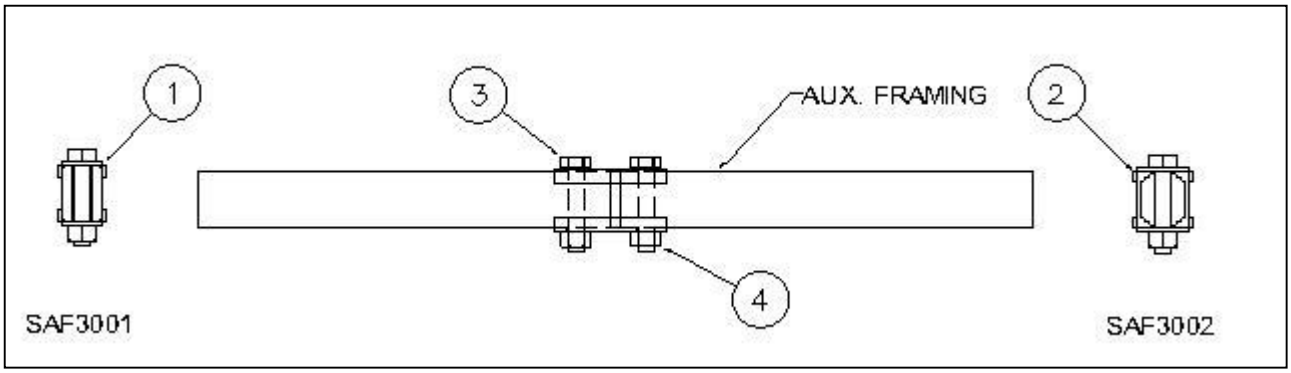

ITEM#	CSF#	SAF3001 (BAR)	SAF3002 (CHNL)
1	A2283-1	2	0
2	A2283-2	0	2
3	HH1209	2	2
4	HN148	2	2

NOTES:
- FINISH: ZINC AND YELLOW

Specifications subject to change. Please contact CSF Customer Service for more information.
© copyright 2004 Central Steel Fabricators, Inc.
http://www.centralsteelfab.com ◆ 2100 Parkes Drive, Broadview, IL 60155
Phone: 708-652-2037 Fax: 708-652-7010

FASTEN TOP ANGLE TO AUXILIARY FRAMING

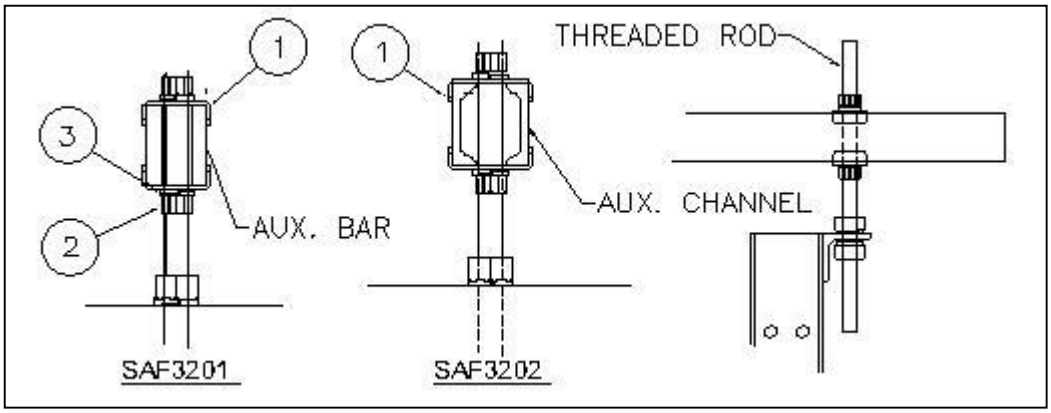

ITEM#	CSF#	SAF3201 (BAR)	SAF3202 (CHNL)
1	FC313	2	0
1	FC316	0	2
2	HN148	4	4
3	LW158	4	4

NOTES:
- FINISH: ZINC AND YELLOW

Specifications subject to change. Please contact CSF Customer Service for more information.
© copyright 2004 Central Steel Fabricators, Inc.
http://www.centralsteelfab.com ◆ 2100 Parkes Drive, Broadview, IL 60155
Phone: 708-652-2037 Fax: 708-652-7010

SBA3901 – Auxiliary Framing Bar Support and Brace Kit

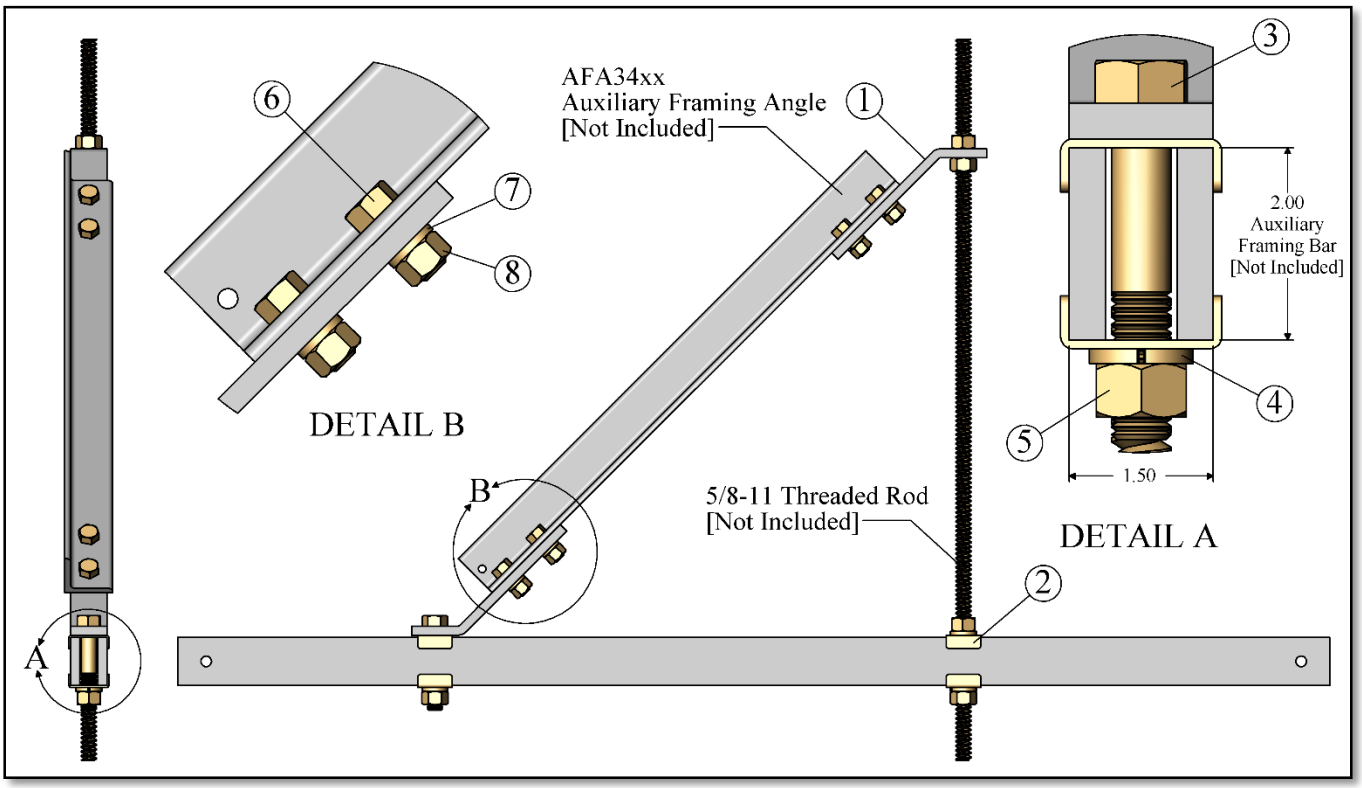

SBA3901 – Auxiliary Framing Bar Support and Brace Kit			
Item#	QTY	CSF P/N#	Description
1	2	A1690	Support Bracket
2	4	FC313	Framing Clip
3	1	HH1211	5/8-11 HHCS x 3.50” LG. – ZY
4	3	LW158	5/8” Spring Lock Washer – ZY
5	5	HN148	5/8-11 Hex Nut –ZY
6	4	HH1104	1/2-13 HHCS x 1.25” LG. – ZY
7	4	LW157	1/2” Spring Lock Washer - ZY
8	4	HN147	1/2-13 Hex Nut - ZY

Notes:
- Finish Code: Zinc and Yellow

RVSD*0617

Specifications subject to change. Please contact CSF Customer Service for more information.

© copyright 2004 Central Steel Fabricators, Inc.
http://www.centralsteelfab.com ◆ 2100 Parkes Drive, Broadview, IL 60155
Phone: 708-652-2037 Fax: 708-652-7010

SBA3902 – Auxiliary Framing Channel Support and Brace Kit

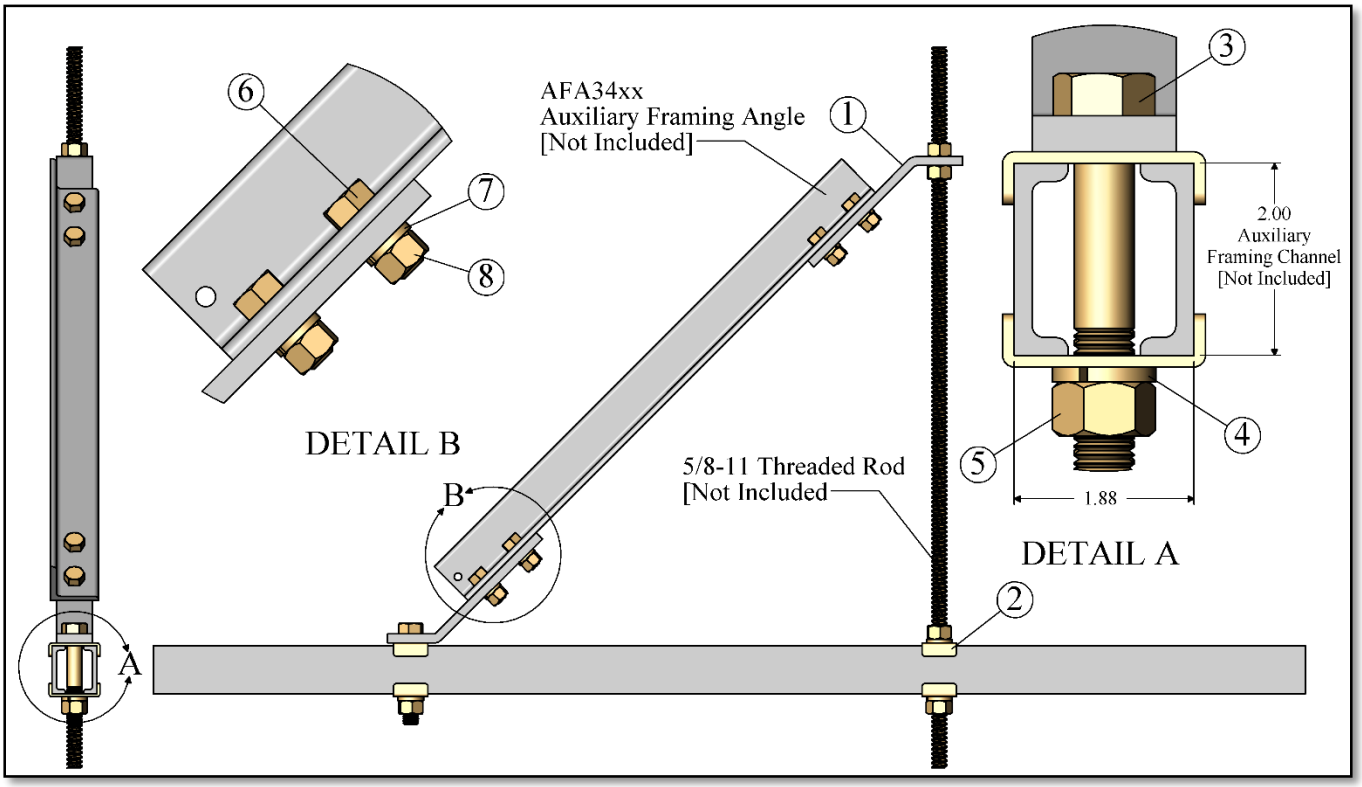

SBA3902 – Auxiliary Framing Channel Support and Brace Kit			
Item#	QTY	CSF P/N#	Description
1	2	A1690	Support Bracket
2	4	FC316	Framing Clip
3	1	HH1212	5/8-11 HHCS x 3.75” LG. – ZY
4	3	LW158	5/8” Spring Lock Washer – ZY
5	5	HN148	5/8-11 Hex Nut –ZY
6	4	HH1104	1/2-13 HHCS x 1.25” LG. – ZY
7	4	LW157	1/2” Spring Lock Washer - ZY
8	4	HN147	1/2-13 Hex Nut - ZY

Notes:
- Finish Code: Zinc and Yellow

RVSD*0617

Specifications subject to change. Please contact CSF Customer Service for more information.

© copyright 2004 Central Steel Fabricators, Inc.
http://www.centralsteelfab.com ◆ 2100 Parkes Drive, Broadview, IL 60155
Phone: 708-652-2037 Fax: 708-652-7010

SEISMIC, AUXILIARY CHANNEL BRACING KIT

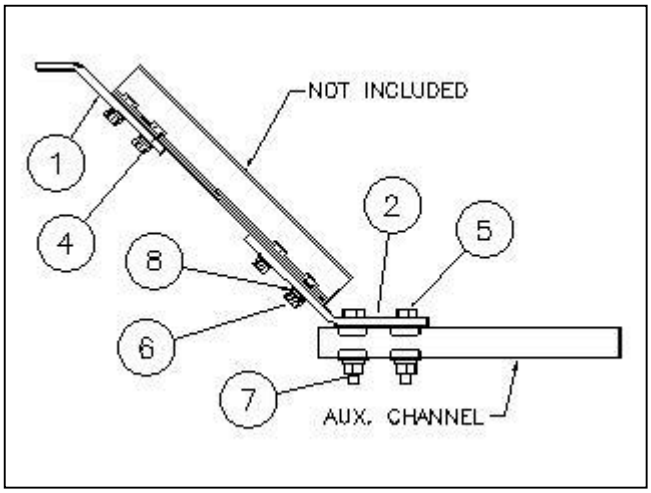

SBA3802EQ		
ITEM#	CSF#	QTY.
1	A1690	1
2	A1690EQ	1
3	FC316	6
4	HH1104	4
5	HH1211	2
6	HN147	4
7	HN148	6
8	LWE157	4
9	LWE158	6

NOTES:
- FINISH: DG
- ALL HARDWARE IS ZINC AND YELLOW

RVSD*1210

Specifications subject to change. Please contact CSF Customer Service for more information.
© copyright 2004 Central Steel Fabricators, Inc.
http://www.centralsteelfab.com ◆ 2100 Parkes Drive, Broadview, IL 60155
Phone: 708-652-2037 Fax: 708-652-7010

BRACING KIT WITH AFA3403

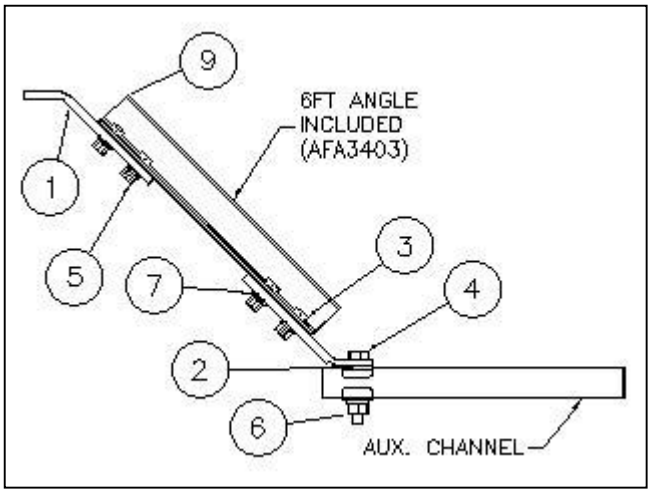

SBA3802K		
ITEM#	CSF#	QTY.
1	A1690	2
2	FC316	2
3	HH1004	4
4	HH1210	1
5	HN147	4
6	HN148	1
7	LW157	4
8	LW158	1
9	AFA3403	1

NOTES:
- FINISH: DG
- ALL HARDWARE IS ZINC AND YELLOW

Specifications subject to change. Please contact CSF Customer Service for more information.
© copyright 2004 Central Steel Fabricators, Inc.
http://www.centralsteelfab.com ◆ 2100 Parkes Drive, Broadview, IL 60155
Phone: 708-652-2037 Fax: 708-652-7010

SCXX - STRAIGHT CLAMP KIT FOR 1.50” & 2.00” STRINGER

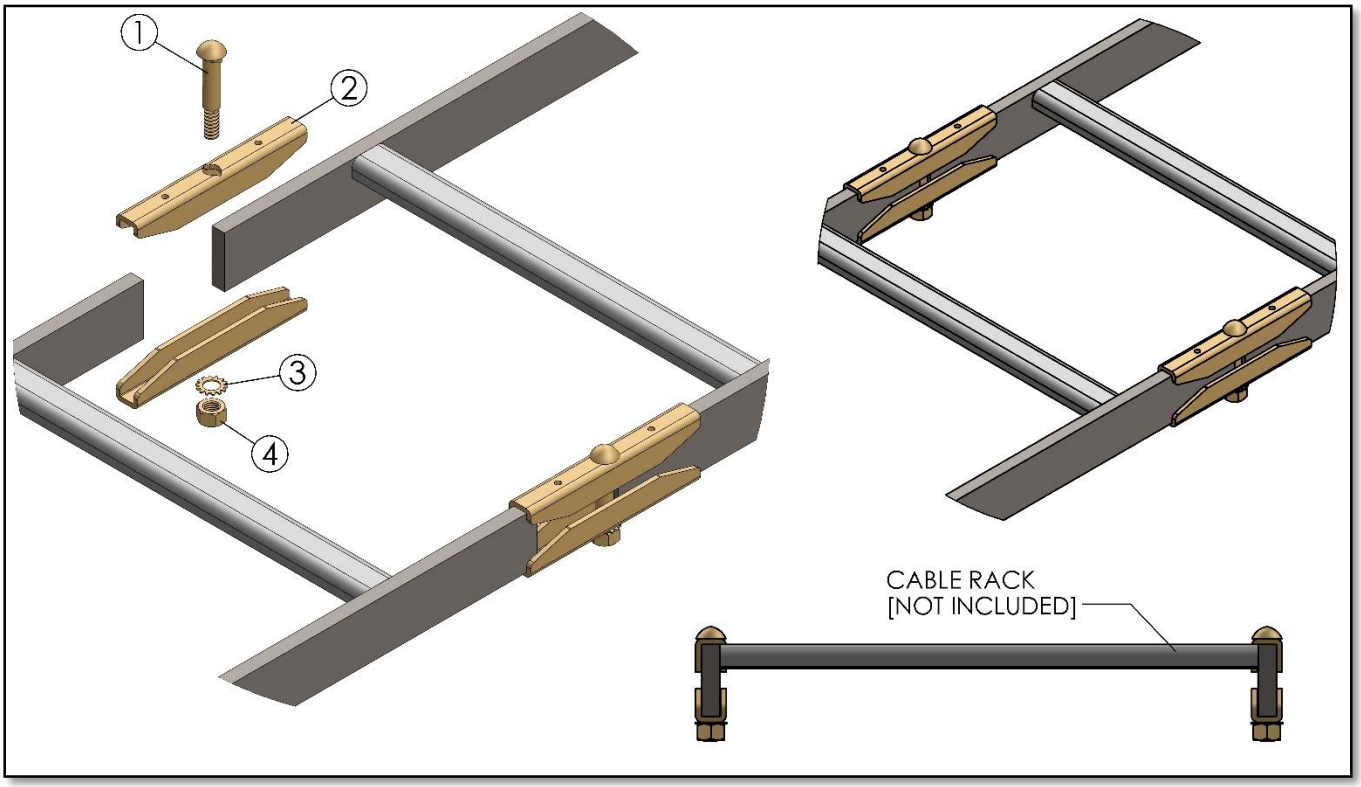

SC12 – STRAIGHT CLAMP KIT [PAIR] - 1.50” STRINGER			
ITEM#	CSF#	QTY	DESCRIPTION
1	SC	4	STRAIGHT CLAMP BRACKET
2	CB172	2	3/8-16 CONNECTION BOLT DMD X 2.12” LG – ZY
3	LWE156	2	3/8” EXTERNAL TOOTH LOCKWASHER – ZY
4	HN146	2	3/8-16 HEX NUT - ZY

SC22 – STRAIGHT CLAMP KIT [PAIR] - 2.00” STRINGER			
ITEM#	CSF#	QTY	DESCRIPTION
1	SC	4	STRAIGHT CLAMP BRACKET
2	CB173	2	3/8-16 CONNECTION BOLT DMD X 2.69” LG – ZY
3	LWE156	2	3/8” EXTERNAL TOOTH LOCKWASHER – ZY
4	HN146	2	3/8-16 HEX NUT - ZY

NOTES:
- FINISH: ZINC AND YELLOW

RVSD*1215

Specifications subject to change. Please contact CSF Customer Service for more information.

© copyright 2004 Central Steel Fabricators, Inc.
http://www.centralsteelfab.com ◆ 2100 Parkes Drive, Broadview, IL 60155
Phone: 708-652-2037 Fax: 708-652-7010

SC22 – NON SEISMIC CABLE RACK JUNCTION KIT
2.00” SOLID BAR STRINGER

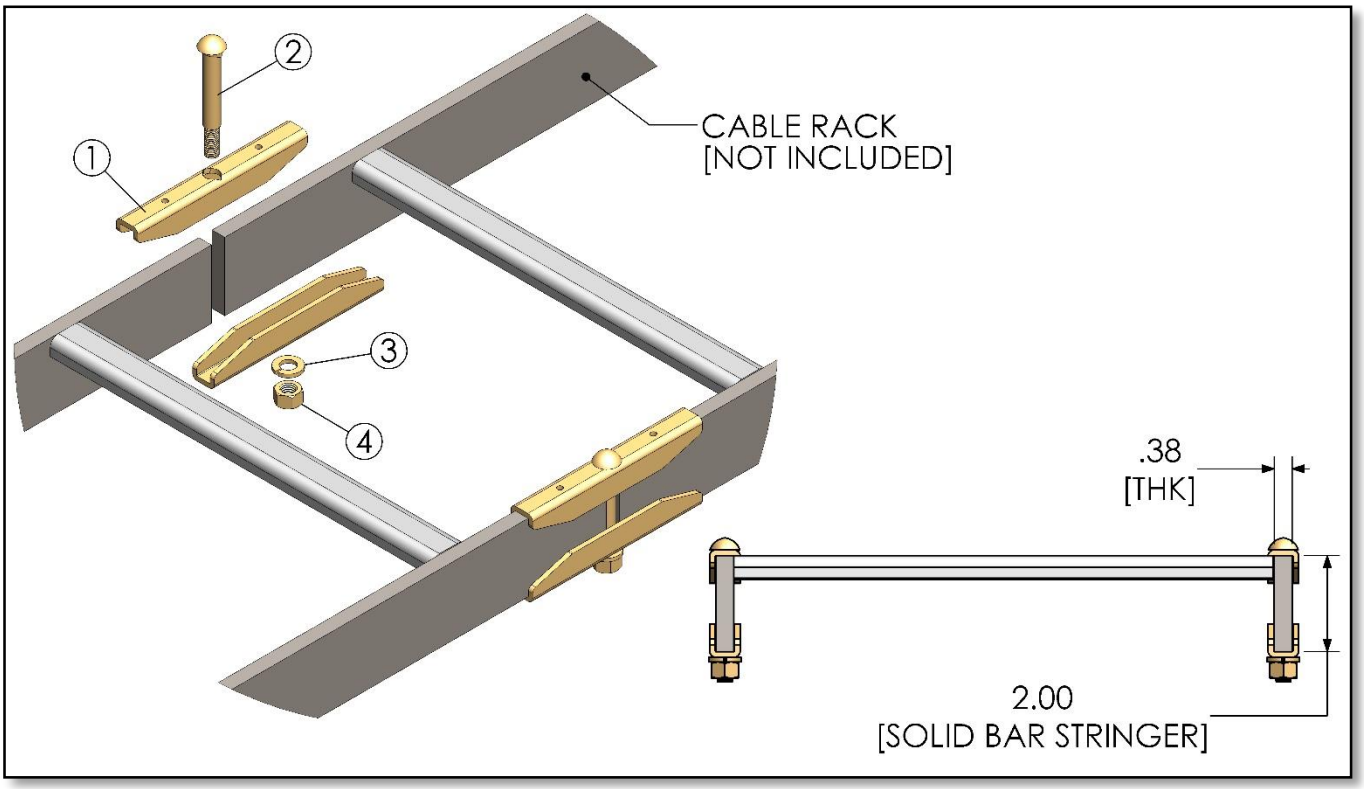

SC22 – NON SEISMIC CABLE RACK JUNCTION KIT			
ITEM#	CSF#	QTY	DESCRIPTION
1	SC	4	STRAIGHT CLAMP BRACKET
2	CB173	2	3/8-16 CONNECTION BOLT DMD X 2.69” LG – ZY
3	LWE156	2	3/8” EXTERNAL TOOTH LOCKWASHER – ZY
4	HN146	2	3/8-16 HEX NUT - ZY

NOTES:
- FINISH: ZINC AND YELLOW

RVSD*0116

Specifications subject to change. Please contact CSF Customer Service for more information.

© copyright 2004 Central Steel Fabricators, Inc.
http://www.centralsteelfab.com ◆ 2100 Parkes Drive, Broadview, IL 60155
Phone: 708-652-2037 Fax: 708-652-7010

SJB6401 – Spanner "J" Bolt Kit - 1.50" Cable Rack To Auxiliary Framing Bar

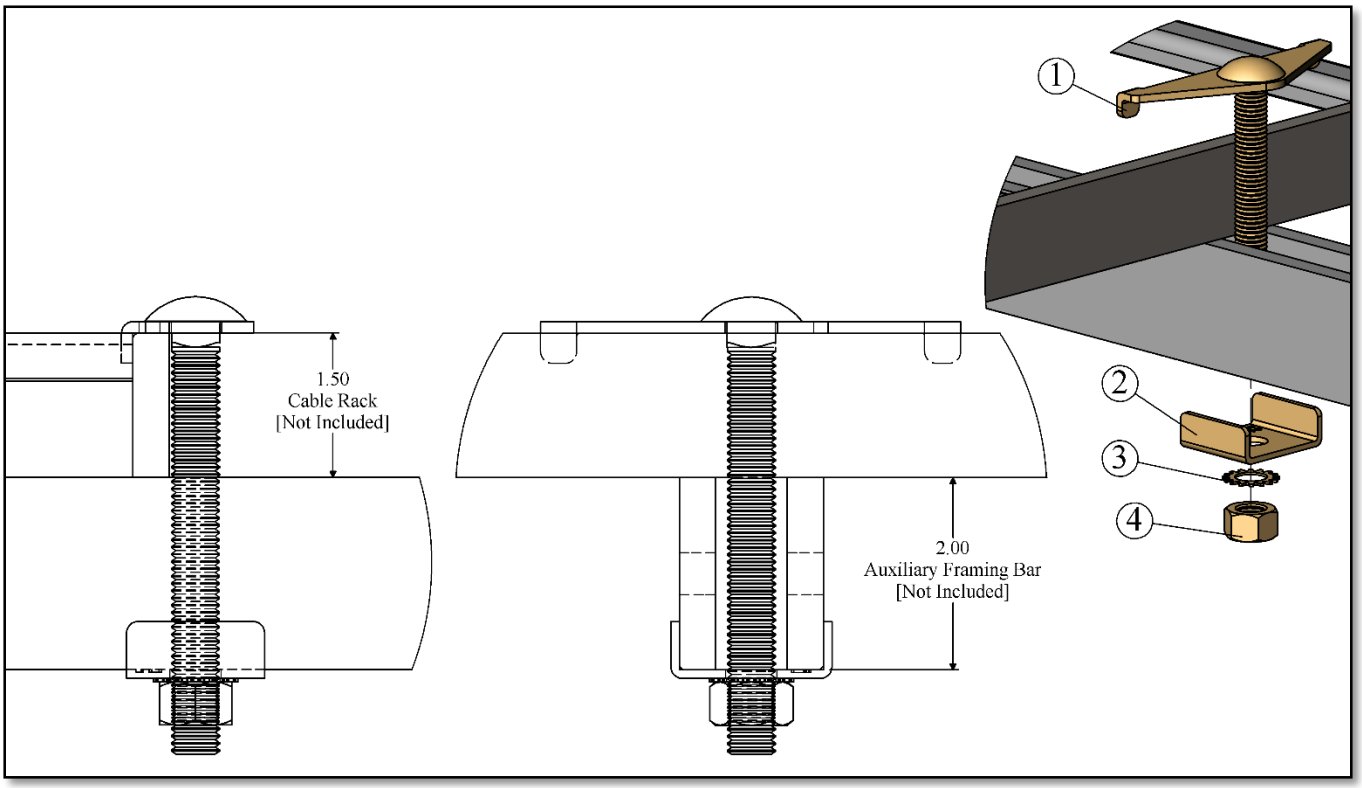

SJB6401 – Spanner "J" Bolt - 1.50" Cable Rack to Auxiliary Framing Bar			
Item#	CSF#	QTY	Description
1	SJB4	1	Spanner "J" Bolt – ZY
2	FC312	1	Framing Clip
3	LWE157	1	1/2" External Tooth Lock Washer - ZY
4	HN147	1	1/2-13 Hex Nut - ZY

Notes: Finish Code: Zinc and Yellow

RVSD*0517

Specifications subject to change. Please contact CSF Customer Service for more information.

© copyright 2004 Central Steel Fabricators, Inc.
http://www.centralsteelfab.com ◆ 2100 Parkes Drive, Broadview, IL 60155
Phone: 708-652-2037 Fax: 708-652-7010

SJB6402 – Spanner "J" Bolt Kit – 2.00" Cable Rack To Auxiliary Framing Bar

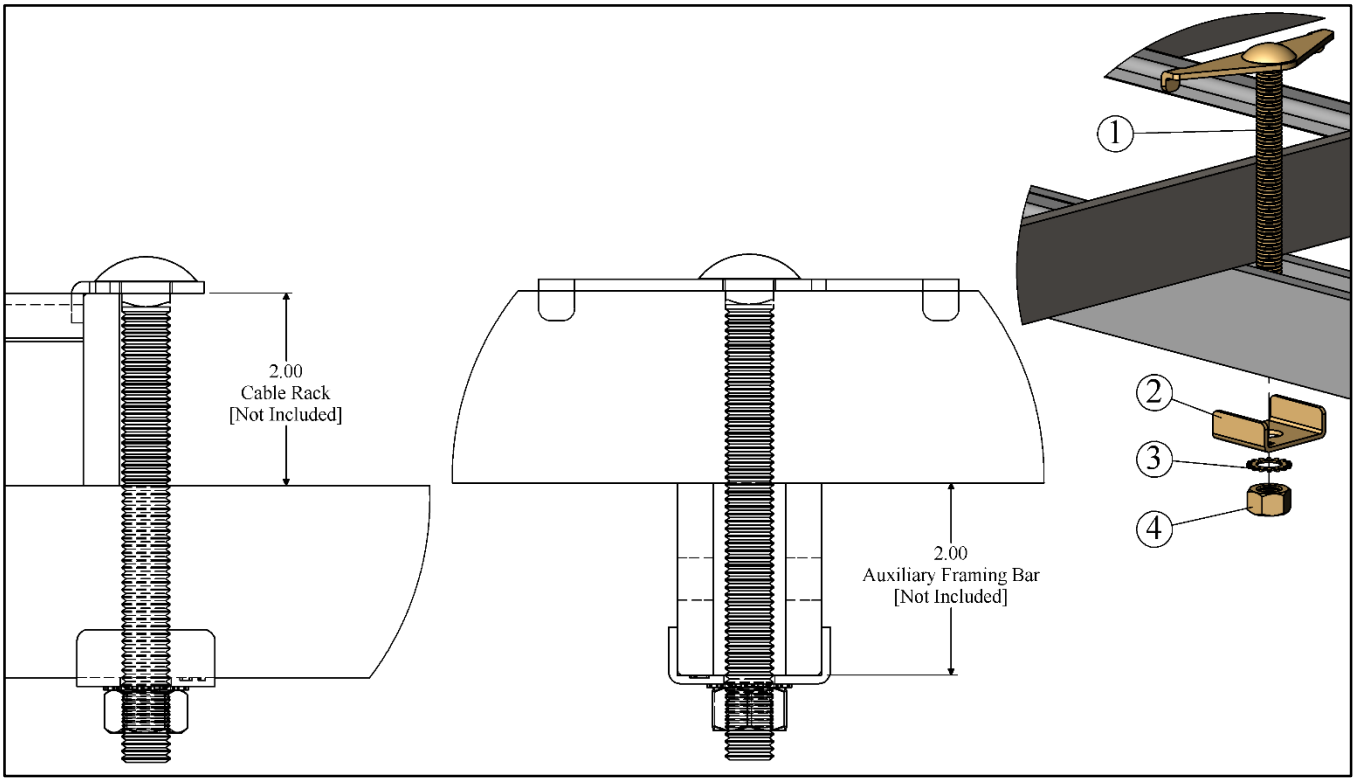

SJB6402 – Spanner "J" Bolt - 2.00" Cable Rack to Auxiliary Framing Bar			
Item#	CSF#	QTY	Description
1	SJB5	1	Spanner "J" Bolt – ZY
2	FC312	1	Framing Clip
3	LWE157	1	1/2" External Tooth Lock Washer - ZY
4	HN147	1	1/2-13 Hex Nut - ZY

Notes: Finish Code: Zinc and Yellow

RVSD*0517

Specifications subject to change. Please contact CSF Customer Service for more information.

© copyright 2004 Central Steel Fabricators, Inc.
http://www.centralsteelfab.com ◆ 2100 Parkes Drive, Broadview, IL 60155
Phone: 708-652-2037 Fax: 708-652-7010

SJB6401C – Spanner "J" Bolt Kit - 1.50" Cable Rack To Auxiliary Framing Channel

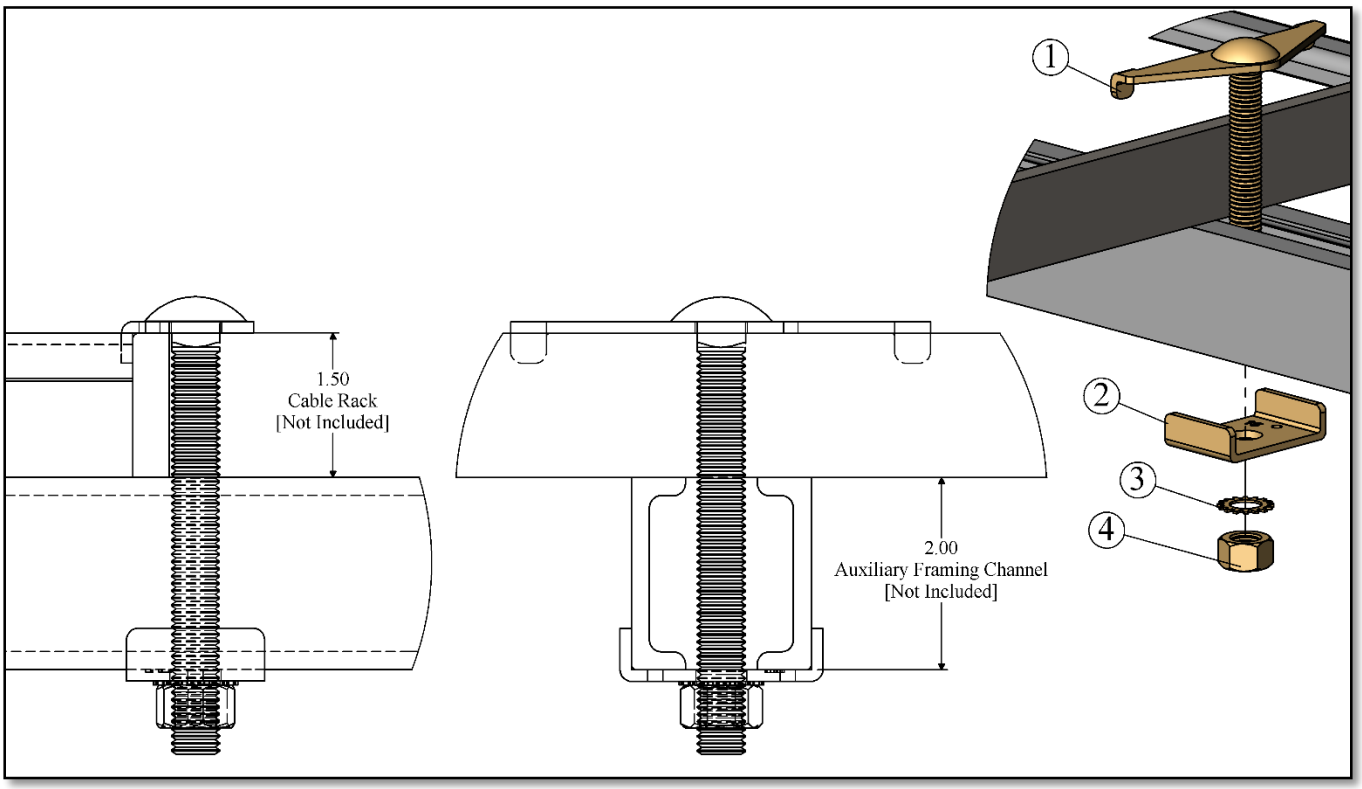

SJB6401C – Spanner "J" Bolt - 1.50" Cable Rack to Auxiliary Framing Channel			
Item#	CSF#	QTY	Description
1	SJB4	1	Spanner "J" Bolt – ZY
2	FC315	1	Framing Clip
3	LWE157	1	1/2" External Tooth Lock Washer - ZY
4	HN147	1	1/2-13 Hex Nut - ZY

Notes: Finish Code: Zinc and Yellow

RVSD*0517

Specifications subject to change. Please contact CSF Customer Service for more information.

© copyright 2004 Central Steel Fabricators, Inc.
http://www.centralsteelfab.com ◆ 2100 Parkes Drive, Broadview, IL 60155
Phone: 708-652-2037 Fax: 708-652-7010

SJB6402C – Spanner "J" Bolt Kit – 2.00" Cable Rack To Auxiliary Framing Channel

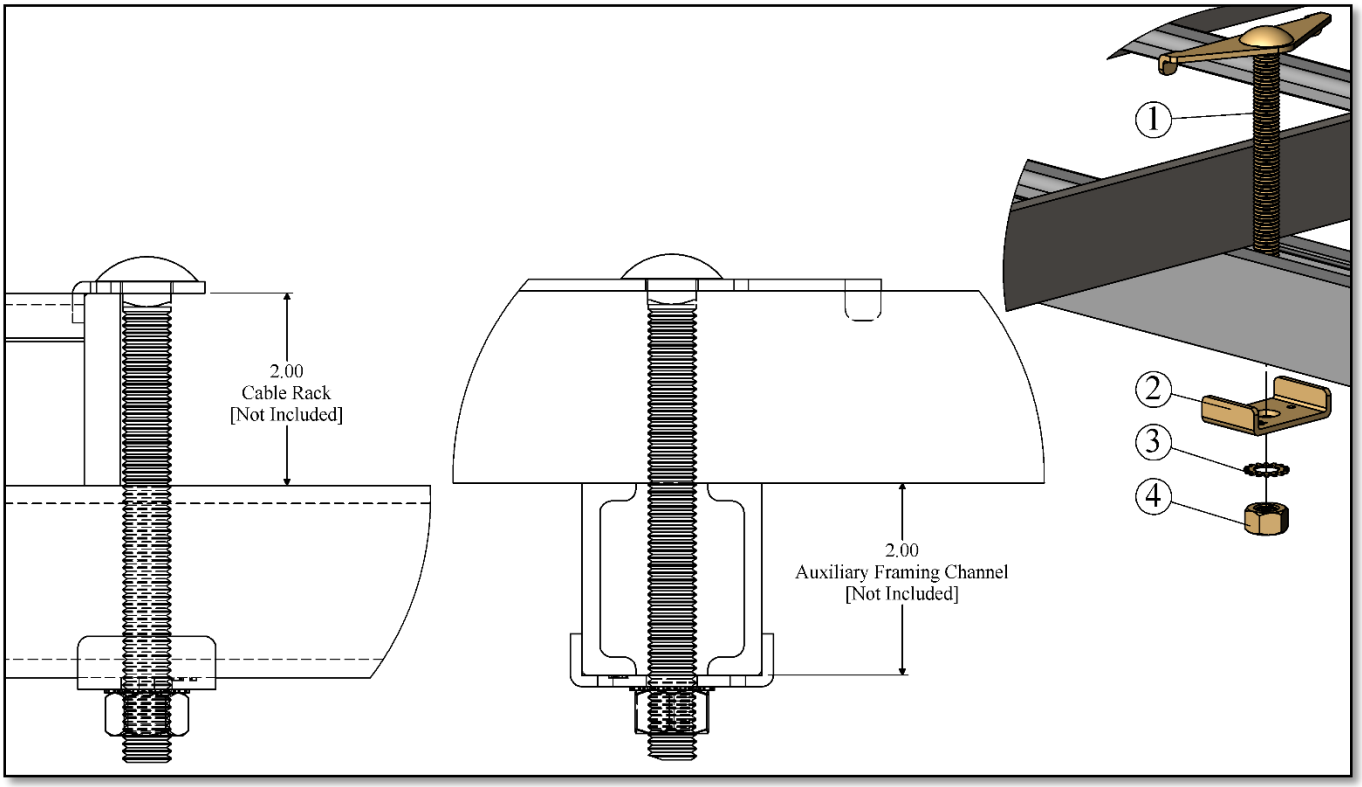

SJB6402C – Spanner "J" Bolt - 2.00" Cable Rack to Auxiliary Framing Channel			
Item#	CSF#	QTY	Description
1	SJB5	1	Spanner "J" Bolt – ZY
2	FC315	1	Framing Clip
3	LWE157	1	1/2" External Tooth Lock Washer - ZY
4	HN147	1	1/2-13 Hex Nut - ZY

Notes: Finish Code: Zinc and Yellow

RVSD*0517

Specifications subject to change. Please contact CSF Customer Service for more information.

© copyright 2004 Central Steel Fabricators, Inc.
http://www.centralsteelfab.com ◆ 2100 Parkes Drive, Broadview, IL 60155
Phone: 708-652-2037 Fax: 708-652-7010

SJB6401CCN – Spanner "J" Bolt Kit - 1.50" Cable Rack To Auxiliary Framing Channel [Continuity]

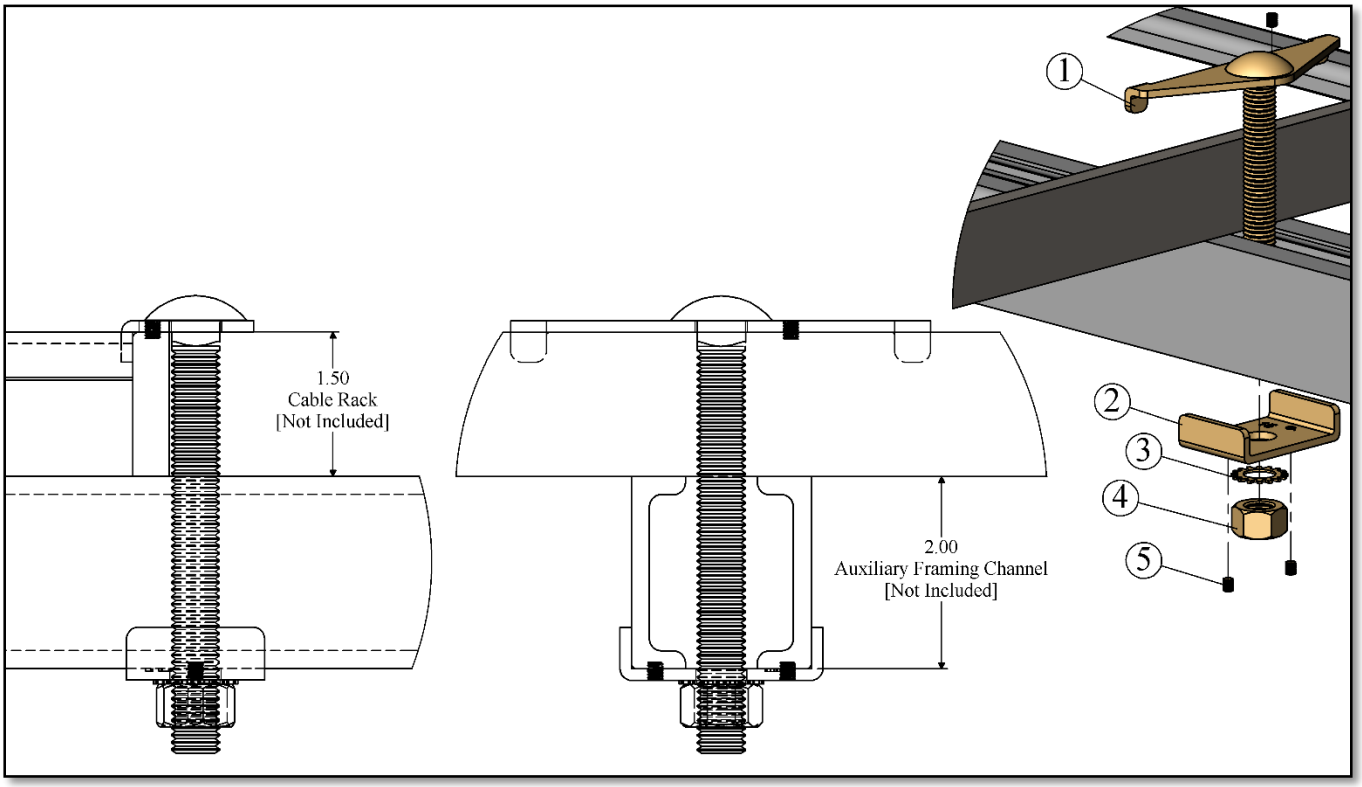

SJB6401CCN – Spanner "J" Bolt Kit - 1.50" Cable Rack to Auxiliary Framing Channel [Continuity]			
Item#	CSF#	QTY	Description
1	SJB4CN	1	Spanner "J" Bolt [Continuity] – ZY
2	FC315CN	1	Framing Clip [Continuity]
3	LWE157	1	1/2" External Tooth Lock Washer - ZY
4	HN147	1	1/2-13 Hex Nut - ZY
5	SS0303	3	#10-32 x 3/16 Socket Set Screw

Notes: Finish Code: Zinc and Yellow

RVSD*0617

Specifications subject to change. Please contact CSF Customer Service for more information.

© copyright 2004 Central Steel Fabricators, Inc.
http://www.centralsteelfab.com ◆ 2100 Parkes Drive, Broadview, IL 60155
Phone: 708-652-2037 Fax: 708-652-7010

SJB6402CCN – Spanner "J" Bolt Kit – 2.00" Cable Rack To Auxiliary Framing Channel [Continuity]

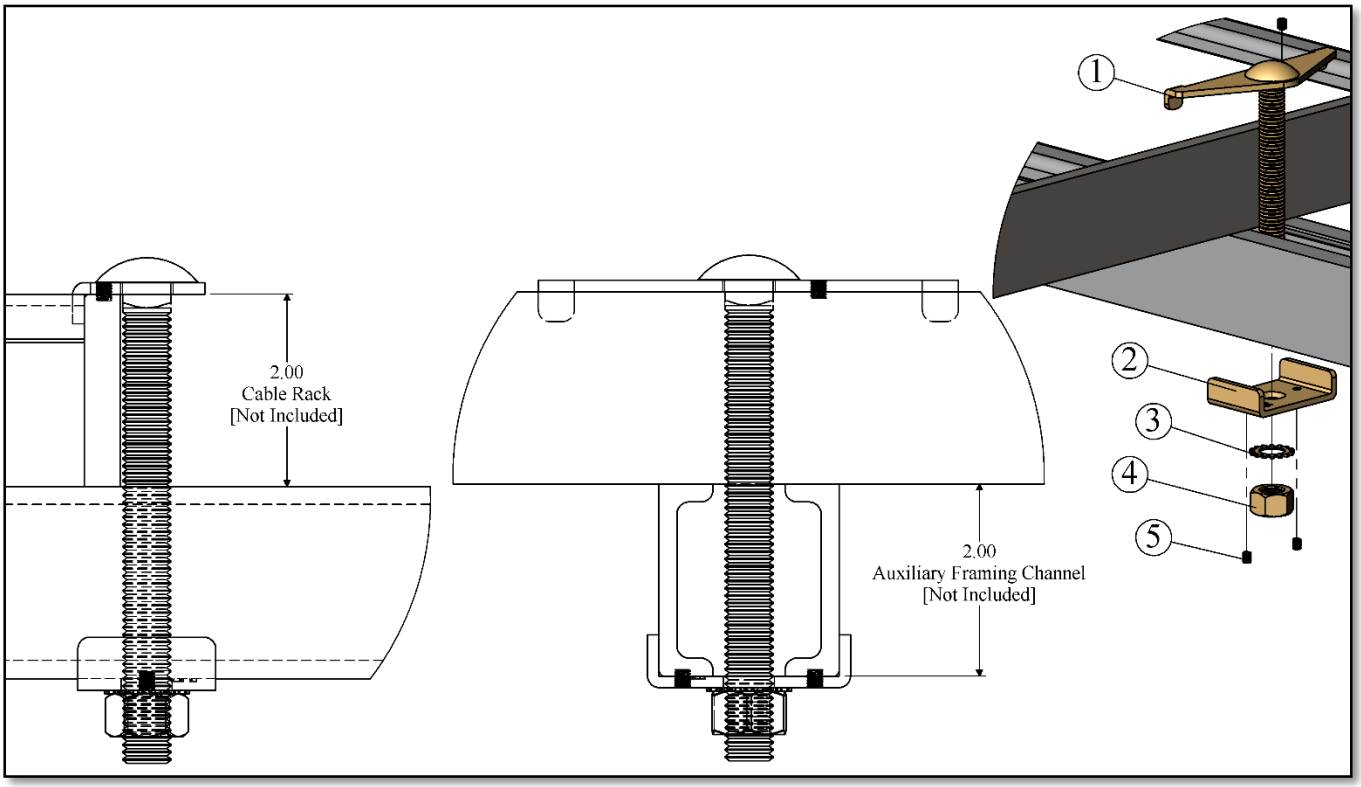

SJB6402CCN – Spanner "J" Bolt Kit - 2.00" Cable Rack to Auxiliary Framing Channel [Continuity]			
Item#	CSF#	QTY	Description
1	SJB5CN	1	Spanner "J" Bolt [Continuity] – ZY
2	FC315CN	1	Framing Clip [Continuity]
3	LWE157	1	1/2" External Tooth Lock Washer - ZY
4	HN147	1	1/2-13 Hex Nut - ZY
5	SS0303	3	#10-32 x 3/16 Socket Set Screw

Notes: Finish Code: Zinc and Yellow

RVSD*0617

Specifications subject to change. Please contact CSF Customer Service for more information.

© copyright 2004 Central Steel Fabricators, Inc.
http://www.centralsteelfab.com ◆ 2100 Parkes Drive, Broadview, IL 60155
Phone: 708-652-2037 Fax: 708-652-7010

SPT62XX SERIES – INSULATION SPLIT TUBE

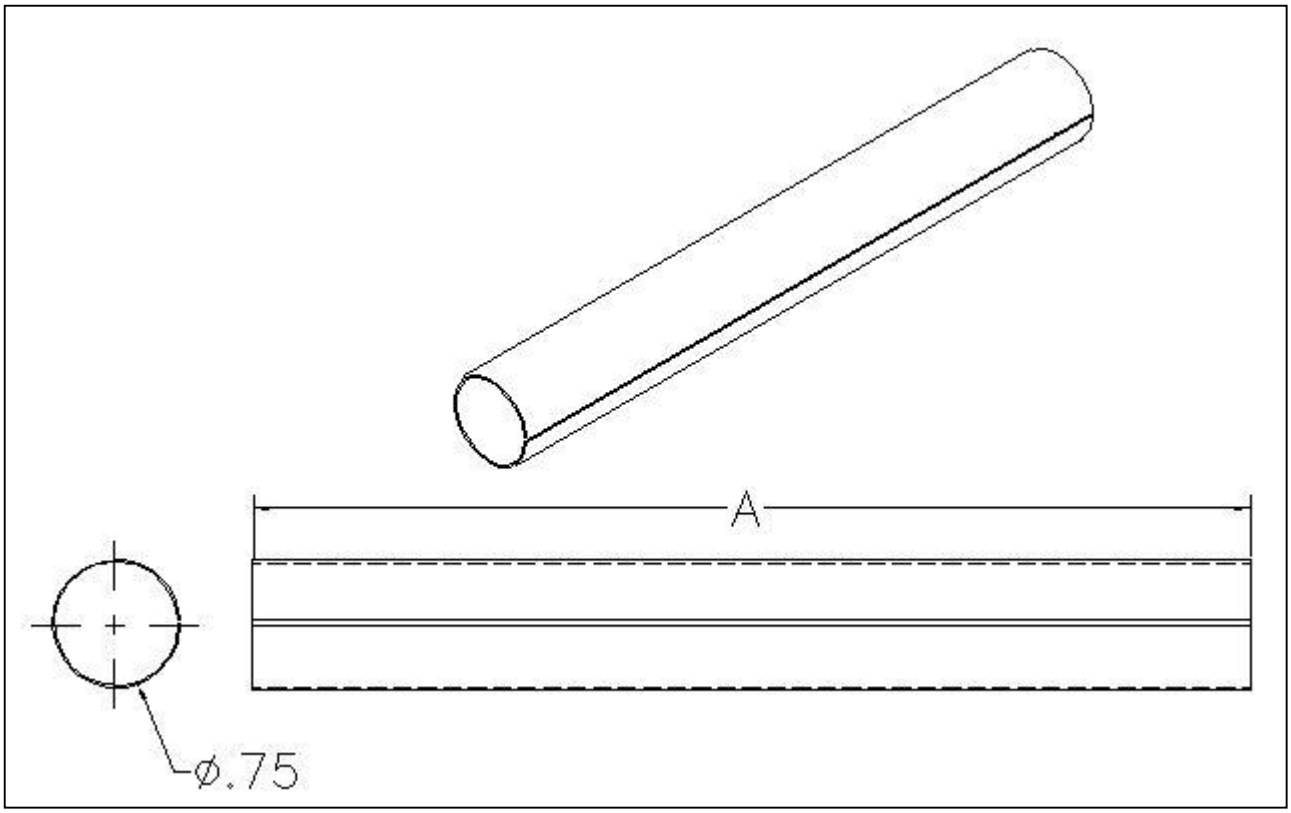

CSF#	DESCRIPTION
SPT6208	.75” X 8.00” LG. INSULATING SPLIT TUBE
SPT6212	.75” X 12.00” LG. INSULATING SPLIT TUBE
SPT6218	.75” X 18.00” LG. INSULATING SPLIT TUBE
SPT6224	.75” X 24.00” LG. INSULATING SPLIT TUBE
SPT6272	.75" X 72.00” LG. INSULATING SPLIT TUBE

- FINISH: GRAY ONLY

Specifications subject to change. Please contact CSF Customer Service for more information.
© copyright 2004 Central Steel Fabricators, Inc.
http://www.centralsteelfab.com ◆ 2100 Parkes Drive, Broadview, IL 60155
Phone: 708-652-2037 Fax: 708-652-7010

MAF2705 - INSULATION MOUNTING KIT AFC TO BAY [5/8" HARDWARE]

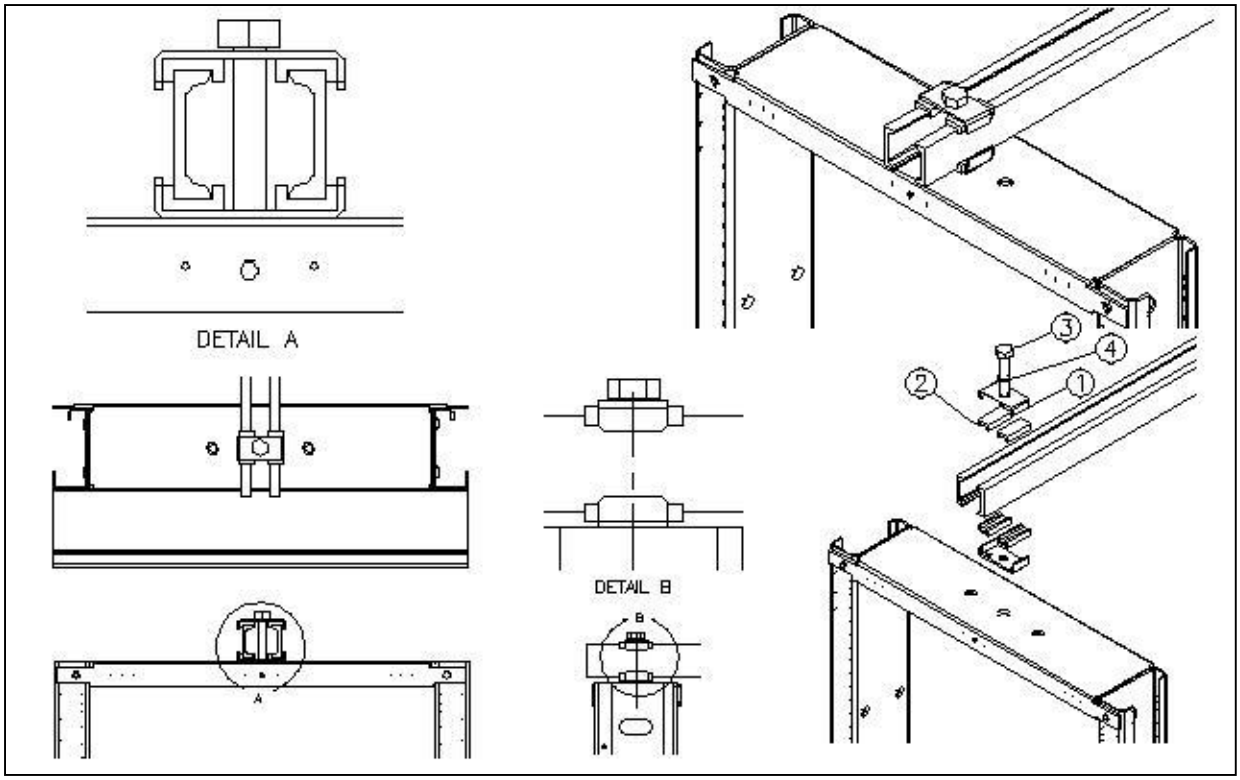

MAF2705 - INSULATION MOUNTING KIT [AFC TO BAY]			
ITEM#	QTY	CSF#	DESCRIPTION
1	2	FC318	FRAMING CLIP
2	4	CI6602	9/16" X 3/16" X 2.00" CHANNEL INSULATION
3	1	HH1212	5/8"-11 HHCS X 3.75" LG. ZY GR5
4	1	LWE158	5/8" EXTERNAL TOOTH LOCK WASHER

NOTES:
- AUX. FRAMING NOT INLUDED
- FINISH: ZINC AND YELLOW

Specifications subject to change. Please contact CSF Customer Service for more information.
© copyright 2004 Central Steel Fabricators, Inc.
http://www.centralsteelfab.com ◆ 2100 Parkes Drive, Broadview, IL 60155
Phone: 708-652-2037 Fax: 708-652-7010

AFS4602 - AUXILIARY CHANNEL SPLICE – RIGID – ZY [1/2” HARDWARE]

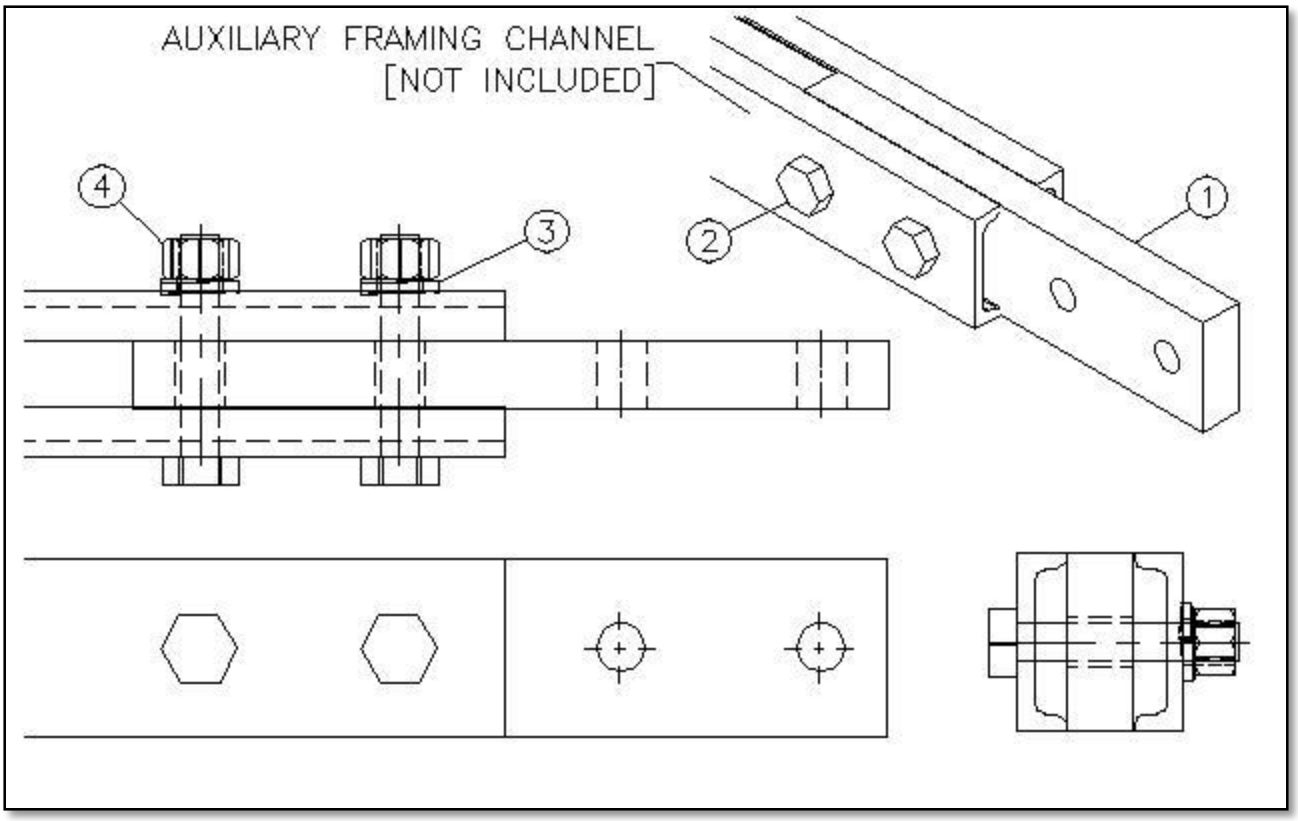

AFS4602 – AUXILIARY CHANNEL SPLICE – RIGID – ZY [1/2” HARDWARE]			
ITEM#	QTY	CSF#	DESCRIPTION
1	1	A6168	BRACE BAR FOR AFS4602 ZY
2	4	HH1109	1/2–13 HHCS X 2.50” ZY
3	4	LW157	1/2” SPRING LOCKWASHER ZY
4	4	HN147	1/2–13 HEX NUT ZY

NOTES:
- AUX. FRAMING NOT INLUDED
- FINISH: ZINC AND YELLOW
- WHEN USING THIS KIT WITH CSF AFC22 SERIES CHANNEL, HOLES IN CHANNEL WILL NEED TO BE DRILLED TO .56” TO ACCOMMODATE THE 1/2” HARDWARE IN THIS KIT.

Specifications subject to change. Please contact CSF Customer Service for more information.
© copyright 2004 Central Steel Fabricators, Inc.
http://www.centralsteelfab.com ◆ 2100 Parkes Drive, Broadview, IL 60155
Phone: 708-652-2037 Fax: 708-652-7010

CJB6301 - "J" Bolt Clip Assembly Kit For 1.50" Cable Rack To Auxiliary Framing Bar

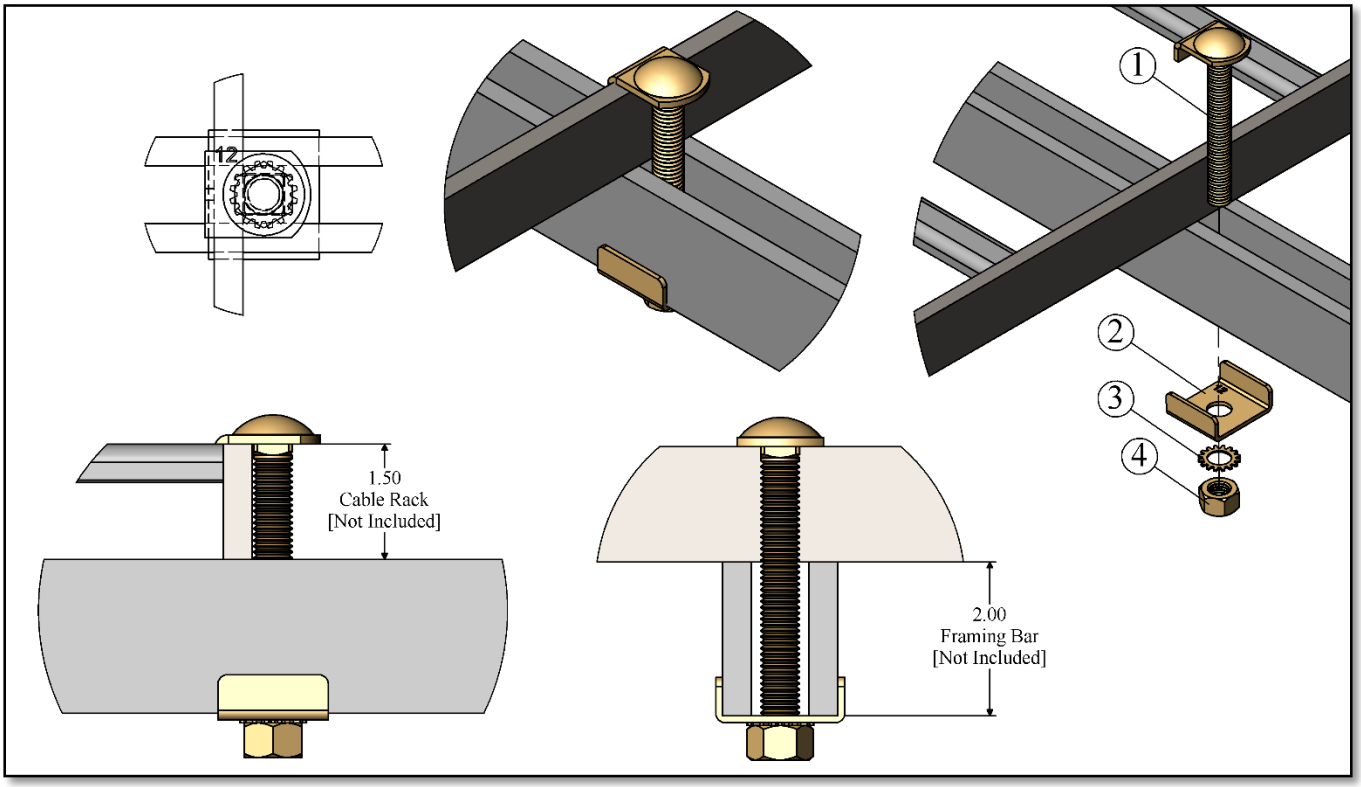

CJB6301 - "J" Bolt Clip Assembly Kit For 1.50" Cable Rack To Auxiliary Framing Bar			
Item#	CSF#	QTY	Description
1	CJB4	1	"J" Bolt Clip x 4.38" LG. - ZY
2	FC312	1	Framing Clip – ZY
3	LWE157	1	1/2" External Tooth Lock Washer – ZY
4	HN147	1	1/2-13 Hex Nut - ZY

RVSD*0517

Specifications subject to change. Please contact CSF Customer Service for more information.

© copyright 2004 Central Steel Fabricators, Inc.
http://www.centralsteelfab.com ◆ 2100 Parkes Drive, Broadview, IL 60155
Phone: 708-652-2037 Fax: 708-652-7010

CJB6302 - "J" Bolt Clip Assembly Kit For 2.00" Cable Rack To Auxiliary Framing Bar

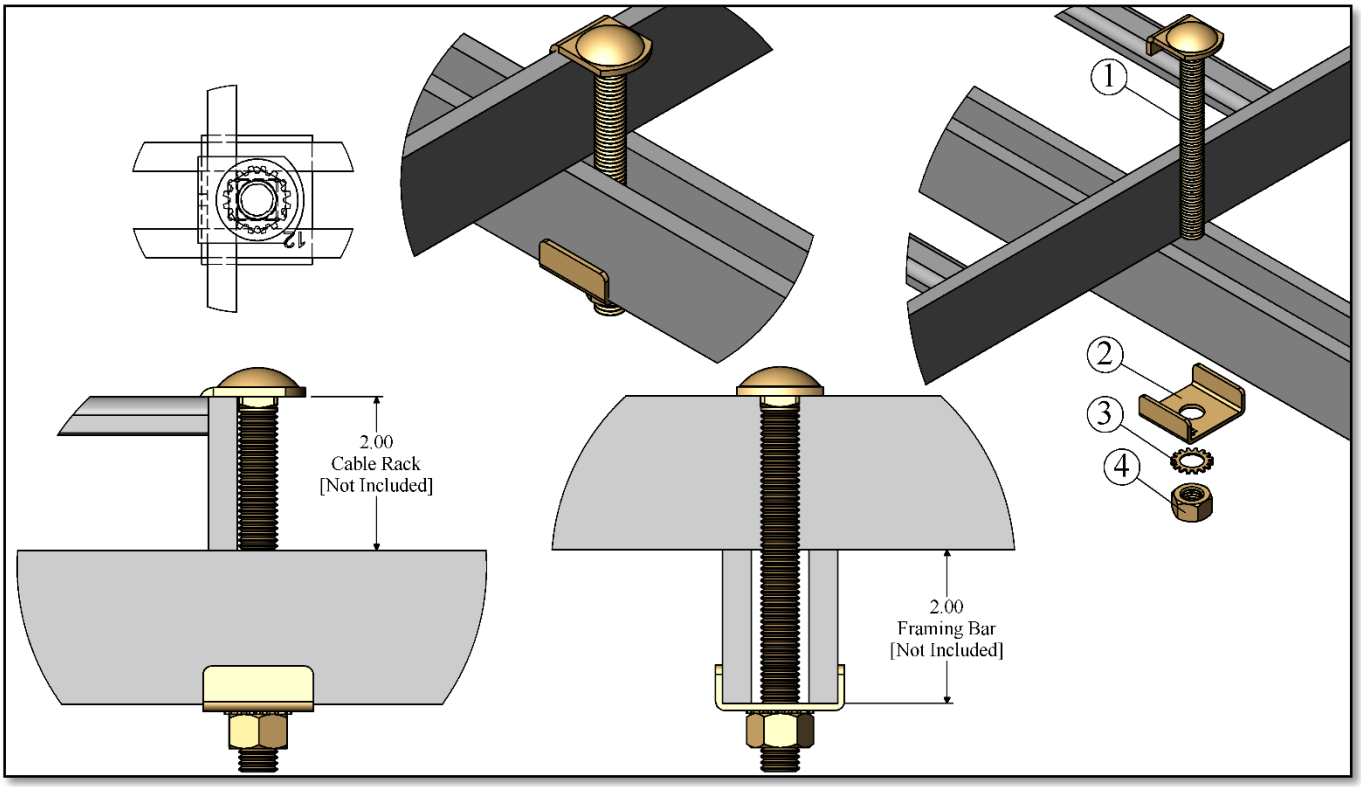

CJB6302 - "J" Bolt Clip Assembly Kit For 2.00" Cable Rack To Auxiliary Framing Bar			
Item#	CSF#	QTY	Description
1	CJB5	1	"J" Bolt Clip x 4.88" LG. - ZY
2	FC312	1	Framing Clip – ZY
3	LWE157	1	1/2" External Tooth Lock Washer – ZY
4	HN147	1	1/2-13 Hex Nut - ZY

RVSD*0517

Specifications subject to change. Please contact CSF Customer Service for more information.

© copyright 2004 Central Steel Fabricators, Inc.
http://www.centralsteelfab.com ◆ 2100 Parkes Drive, Broadview, IL 60155
Phone: 708-652-2037 Fax: 708-652-7010

CJB6301C - “J” Bolt Clip Assembly Kit For 1.50” Cable Rack To Auxiliary Framing Channel

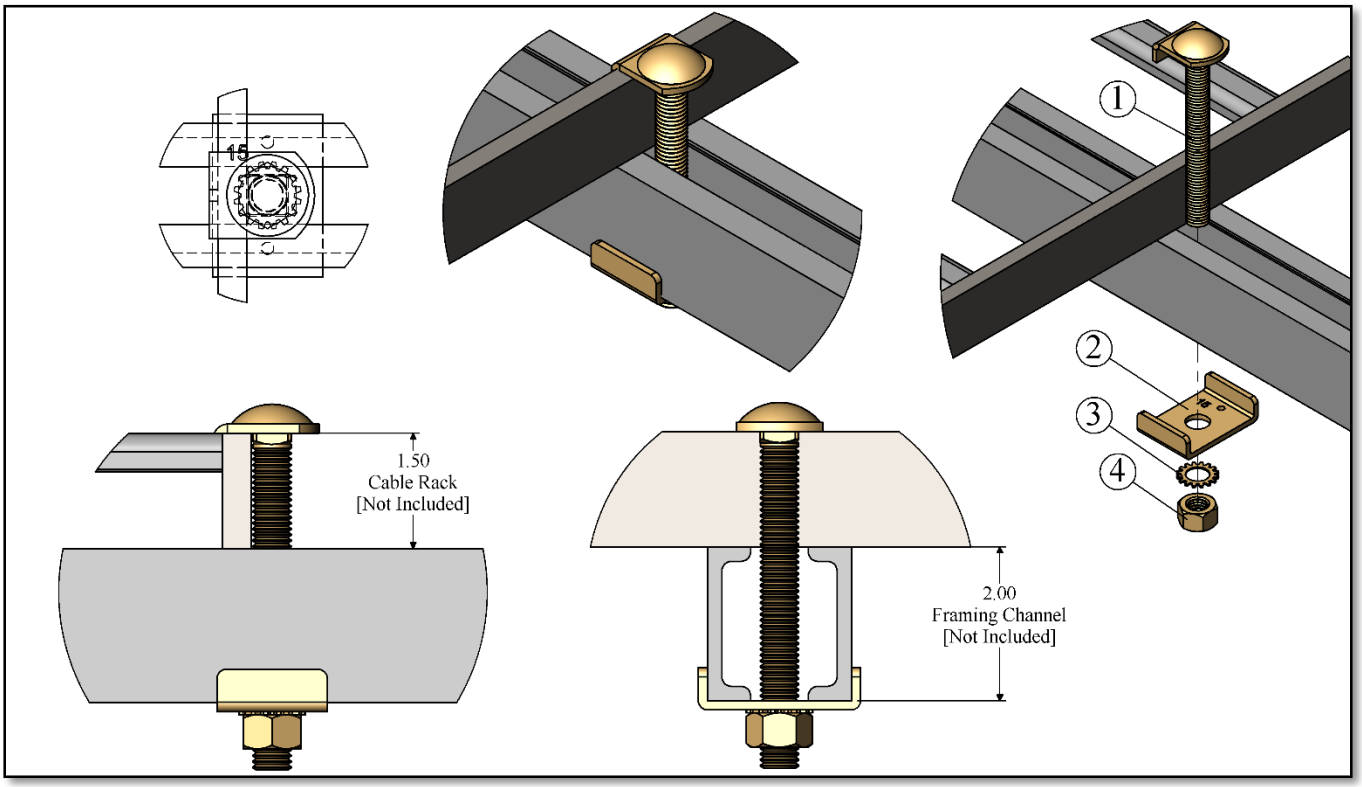

CJB6301C - “J” Bolt Clip Assembly Kit For 1.50” Cable Rack To Auxiliary Framing Channel			
Item#	CSF#	QTY	Description
1	CJB4	1	“J” Bolt Clip x 4.38” LG. - ZY
2	FC315	1	Framing Clip – ZY
3	LWE157	1	1/2” External Tooth Lock Washer – ZY
4	HN147	1	1/2-13 Hex Nut - ZY

RVSD*0517

Specifications subject to change. Please contact CSF Customer Service for more information.

© copyright 2004 Central Steel Fabricators, Inc.
http://www.centralsteelfab.com ◆ 2100 Parkes Drive, Broadview, IL 60155
Phone: 708-652-2037 Fax: 708-652-7010

CJB6302C - “J” Bolt Clip Assembly Kit For 2.00” Cable Rack To Auxiliary Framing Channel

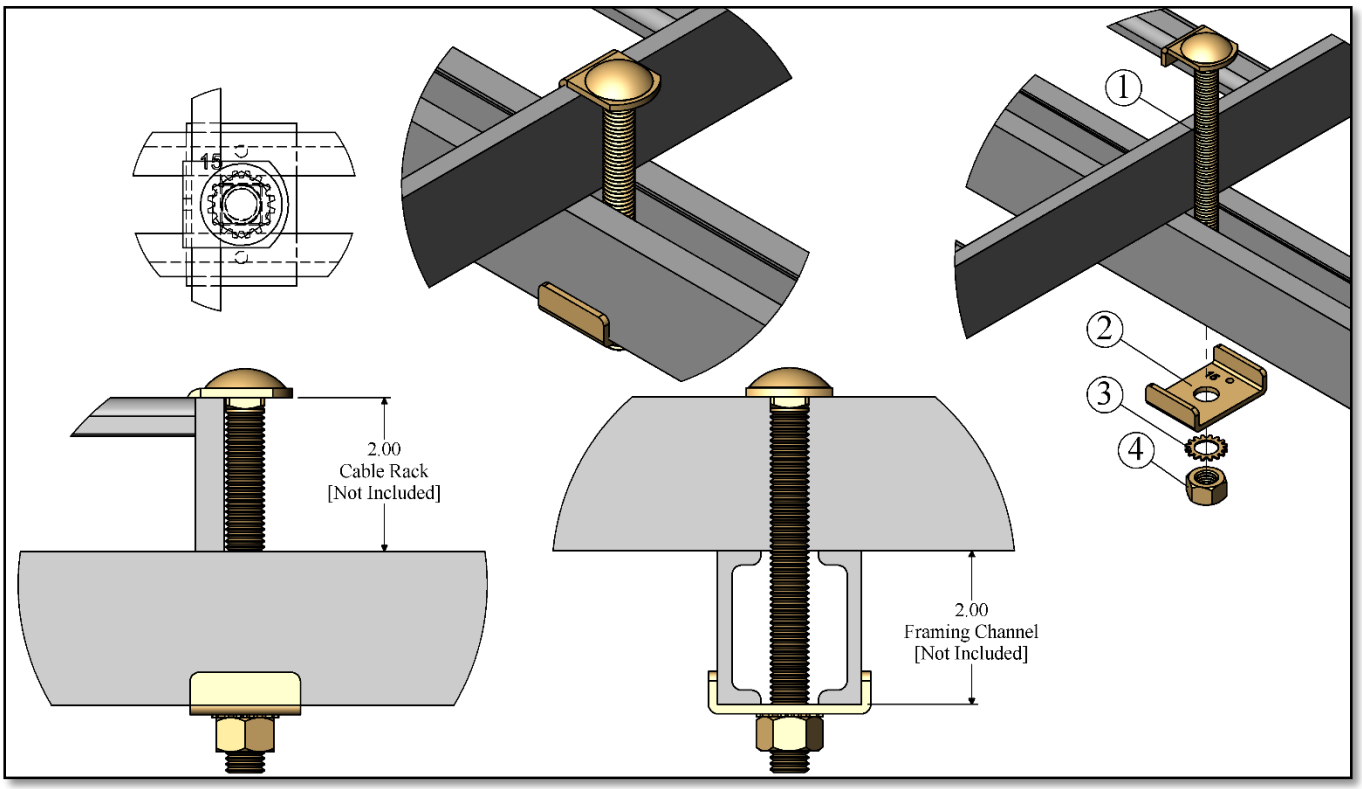

CJB6302C - “J” Bolt Clip Assembly Kit For 2.00” Cable Rack To Auxiliary Framing Channel			
Item#	CSF#	QTY	Description
1	CJB5	1	“J” Bolt Clip x 4.88” LG. - ZY
2	FC315	1	Framing Clip – ZY
3	LWE157	1	1/2” External Tooth Lock Washer – ZY
4	HN147	1	1/2-13 Hex Nut - ZY

RVSD*0517

Specifications subject to change. Please contact CSF Customer Service for more information.

© copyright 2004 Central Steel Fabricators, Inc.
http://www.centralsteelfab.com ◆ 2100 Parkes Drive, Broadview, IL 60155
Phone: 708-652-2037 Fax: 708-652-7010

CJB6302CK - "J" Bolt Clip Assembly Kit For 2.00" Cable Rack To Auxiliary Framing Channel [Pair]

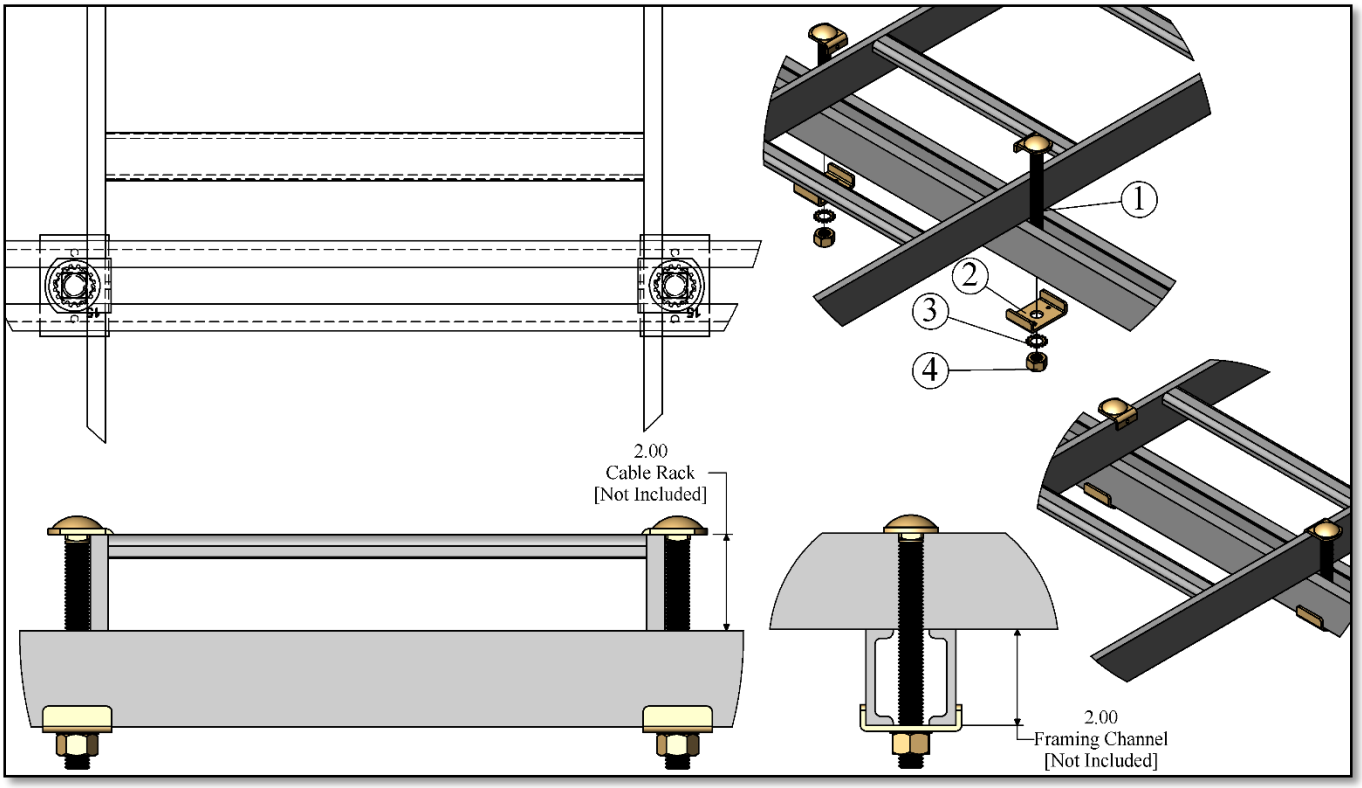

CJB6302CK - "J" Bolt Clip Assembly Kit For 2.00" Cable Rack To Auxiliary Framing Channel [Pair]			
Item#	CSF#	QTY	Description
1	CJB5	2	"J" Bolt Clip x 4.88" LG. - ZY
2	FC315	2	Framing Clip – ZY
3	LWE157	2	1/2" External Tooth Lock Washer – ZY
4	HN147	2	1/2-13 Hex Nut - ZY

RVSD*0517

Specifications subject to change. Please contact CSF Customer Service for more information.

© copyright 2004 Central Steel Fabricators, Inc.
http://www.centralsteelfab.com ◆ 2100 Parkes Drive, Broadview, IL 60155
Phone: 708-652-2037 Fax: 708-652-7010

CLIP J-BOLT 5-3/8" [JBC + SW] KIT

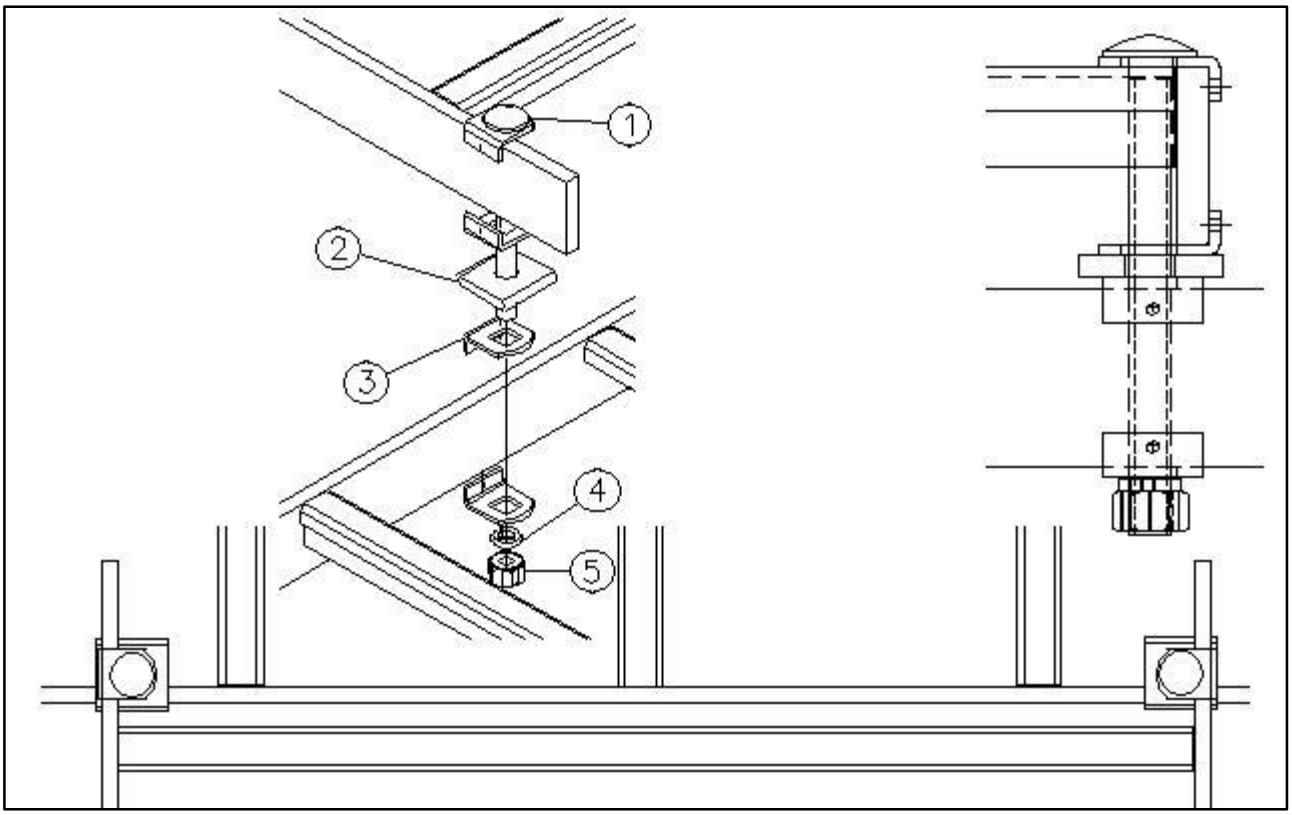

CJB5.5K1			
ITEM#	QTY#	CSF P/N#	DESCRIPTION
1	1	CJB5.5	1/2 – 13 CLIP "J" BOLT X 5.375" LG. CARRIAGE BOLT
2	1	SW50	1/2" HOLE SQUARE WASHER ZY
3	3	JBC	"J" BOLT CLIP ZY
4	1	LW157	1/2" SPRING LOCKWASHERZY
5	1	HN147	1/2 – 13 HEX NUT ZY

RVSD*0414

Specifications subject to change. Please contact CSF Customer Service for more information.

© copyright 2004 Central Steel Fabricators, Inc.
http://www.centralsteelfab.com ◆ 2100 Parkes Drive, Broadview, IL 60155
Phone: 708-652-2037 Fax: 708-652-7010

BAF4005 – BRACE AUXILIARY FRAMING KIT 45 DEGREES

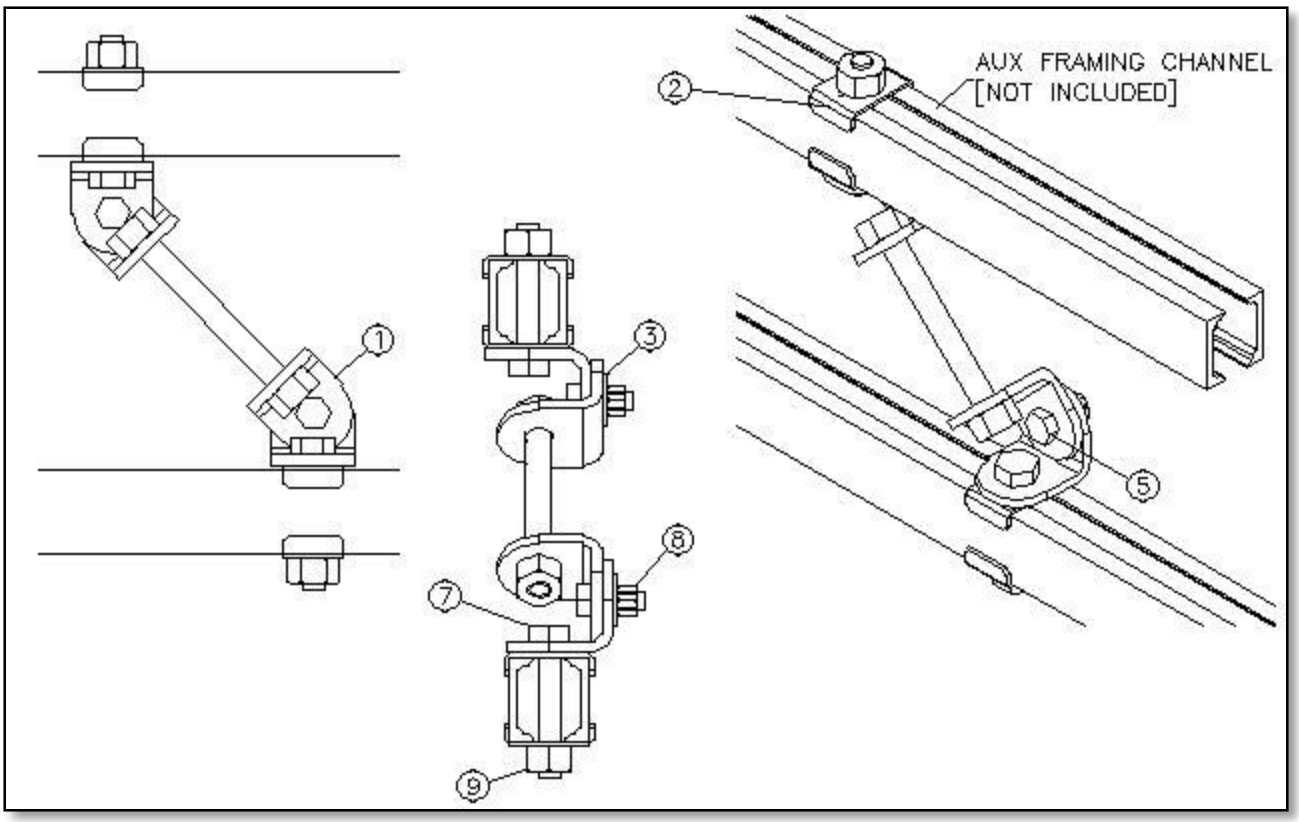

BAF4005- BRACE AUXILIARY FRAMING KIT 45 DEGREES			
ITEM#	QTY	CSF#	DESCRIPTION
1	4	BB1	BRACING BRACKET
2	4	FC316	FRAMING CLIP
3	4	FW167	1/2” FLAT WASHER ZY
4	1	FW168	5/8” FLAT WASHER ZY [NOT SHOWN]
5	2	HH1104	12-13 HHCS X 1.25” LG. ZY
6	1	HH1201	5/8”-11 HHCS X 1.00” LG. ZY [NOT SHOWN]
7	2	HH1210	5/8”-11 HHCS X 3.25” LG. ZY
8	2	HN147	12-13 HEX NUT ZY
9	6	HN148	5/8”-11 HEX NUT ZY

NOTES:
- AUX. FRAMING NOT INCLUDED
- FINISH: ZINC AND YELLOW

Specifications subject to change. Please contact CSF Customer Service for more information.
© copyright 2004 Central Steel Fabricators, Inc.
http://www.centralsteelfab.com ◆ 2100 Parkes Drive, Broadview, IL 60155
Phone: 708-652-2037 Fax: 708-652-7010

MAF2707 – STIFFENING CLIP KIT 5/8”

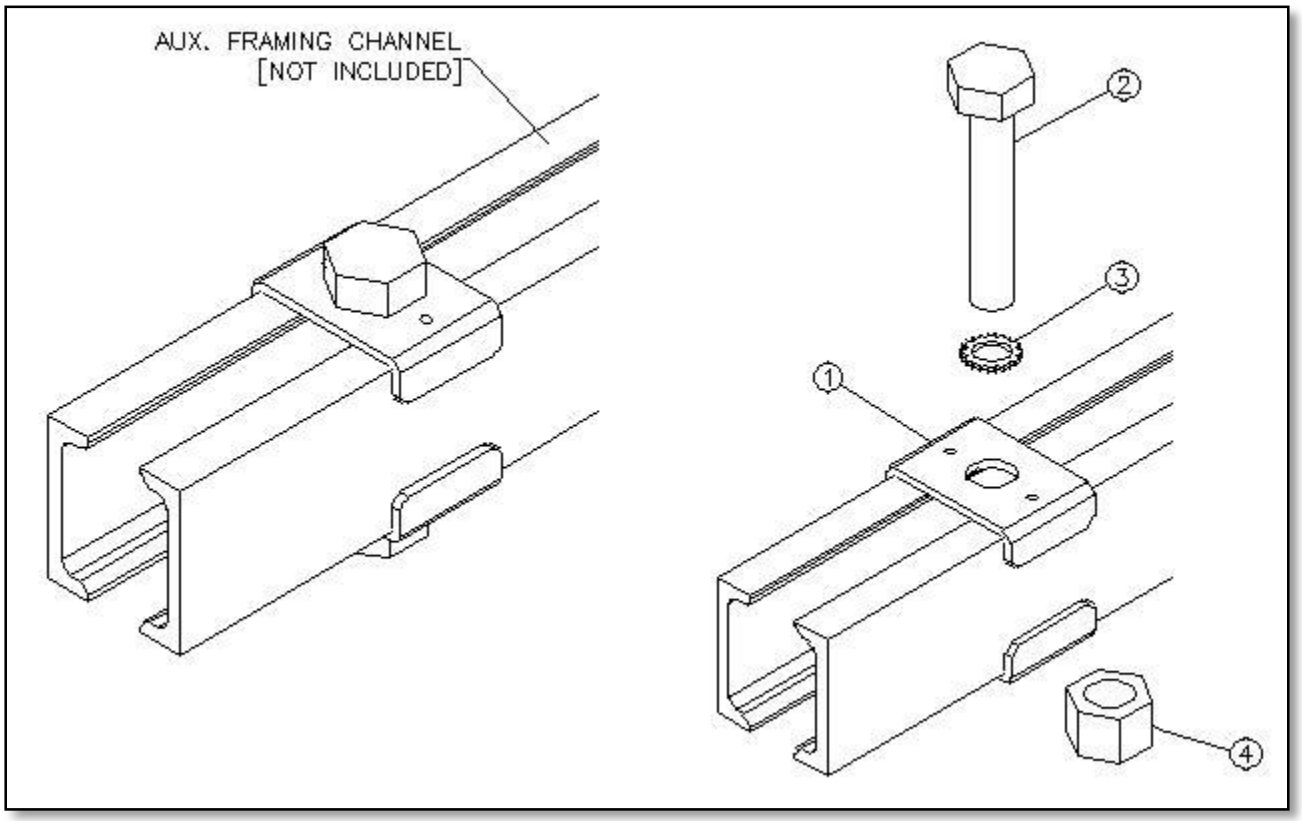

MAF2707- STIFFENING CLIP KIT 5/8”			
ITEM#	QTY	CSF#	DESCRIPTION
1	2	FC316	FRAMING CLIP
2	1	HH1209	5/8-11 HHCS X 3.00” ZY
3	1	LWE158	5/8 EXTERNAL TOOTH LOCKWASHER
4	1	HN148	5/8” – 11 HEX NUT ZY

NOTES:
- AUX. FRAMING NOT INCLUDED
- FINISH: ZINC AND YELLOW

Specifications subject to change. Please contact CSF Customer Service for more information.
© copyright 2004 Central Steel Fabricators, Inc.
http://www.centralsteelfab.com ◆ 2100 Parkes Drive, Broadview, IL 60155
Phone: 708-652-2037 Fax: 708-652-7010

EPQ4545DGK – EQ PLATE 4.50” X 4.50” SLOTTED

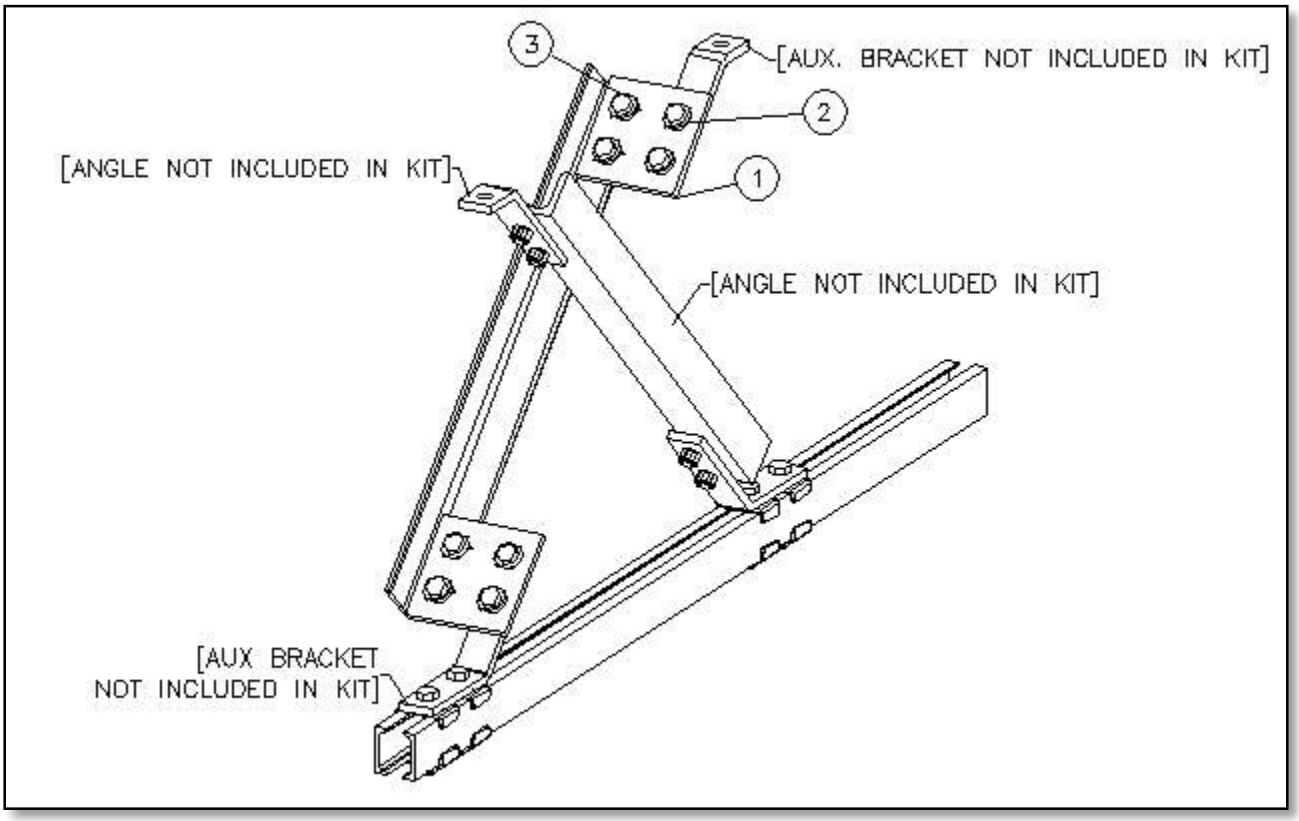

EQP4545DGK			
ITEM#	QTY	CSF#	DESCRIPTION
1	2	EQP4545DG	EQ PLATE 4.50” X 4.50” SLOTTED
2	8	FW167	1/2” FLAT WASHER ZY
3	8	HH1106	1/2 – 13 HHCS X 1.75” ZY
4	8	LWE157	1/2“ EXT. TOOTH LOCKWASHER ZY
5	8	HN148	1/2 - 13 HEX NUT ZY

NOTES:
- AUX. FRAMING NOT INCLUDED
- AUX. BRACKET NOT INCLUDED
- FINISH: ZINC AND YELLOW

Specifications subject to change. Please contact CSF Customer Service for more information.
© copyright 2004 Central Steel Fabricators, Inc.
http://www.centralsteelfab.com ◆ 2100 Parkes Drive, Broadview, IL 60155
Phone: 708-652-2037 Fax: 708-652-7010

FCA316 – FRAMING CHANNEL SLOTTED CLIP ASSEMBLY

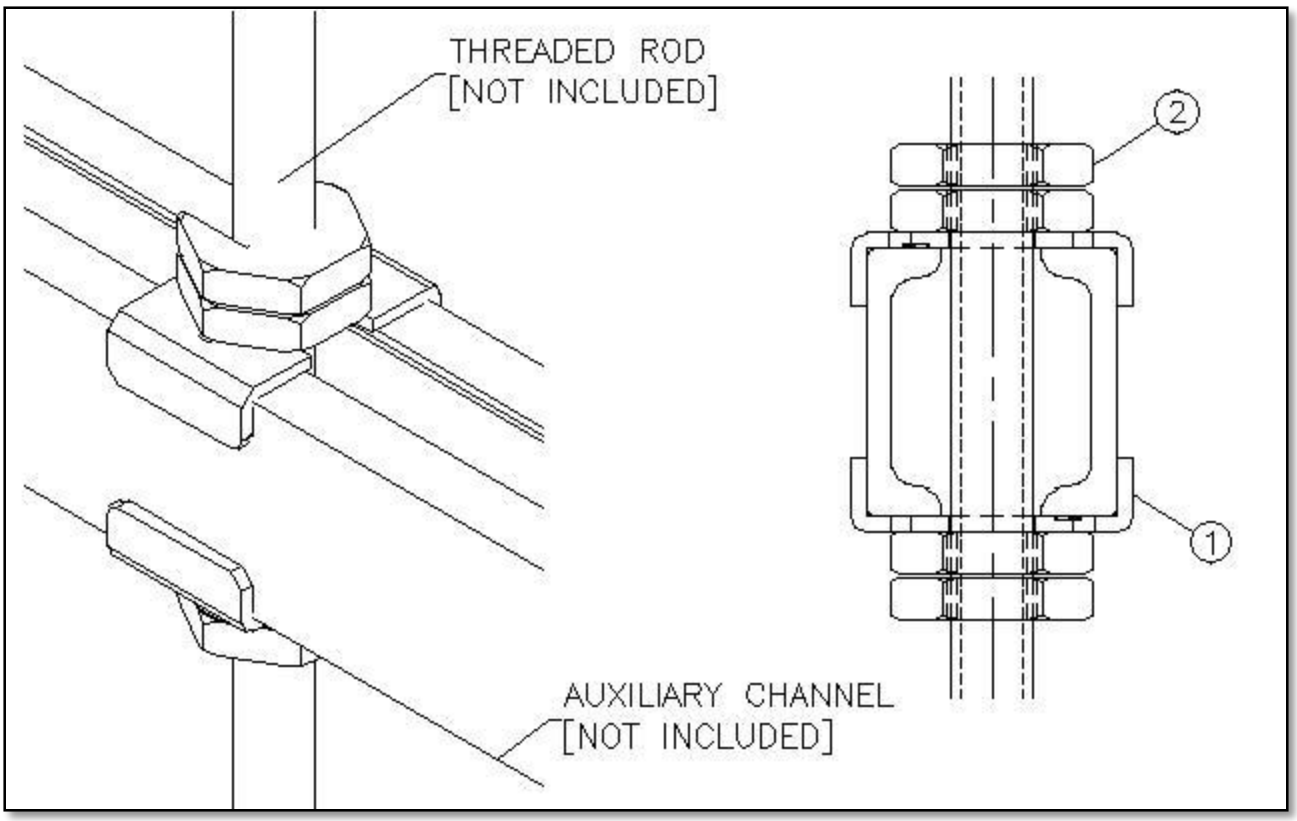

FCA316 – FRAMING CHANNEL SLOTTED CLIP ASSEMBLY			
ITEM#	QTY	CSF#	DESCRIPTION
1	2	FC316S	FRAMING CLIP SLOTTED
2	2	HNS62	5/8-11 SPLIT LOCKING HEX NUT ZY

NOTES:
- AUX. FRAMING NOT INCLUDED
- THREADED ROD NOT INCLUDED
- FINISH: ZINC AND YELLOW

Specifications subject to change. Please contact CSF Customer Service for more information.
© copyright 2004 Central Steel Fabricators, Inc.
http://www.centralsteelfab.com ◆ 2100 Parkes Drive, Broadview, IL 60155
Phone: 708-652-2037 Fax: 708-652-7010

FCA326 – FRAMING CHANNEL CROSSOVER SLOTTED CLIP ASSEMBLY

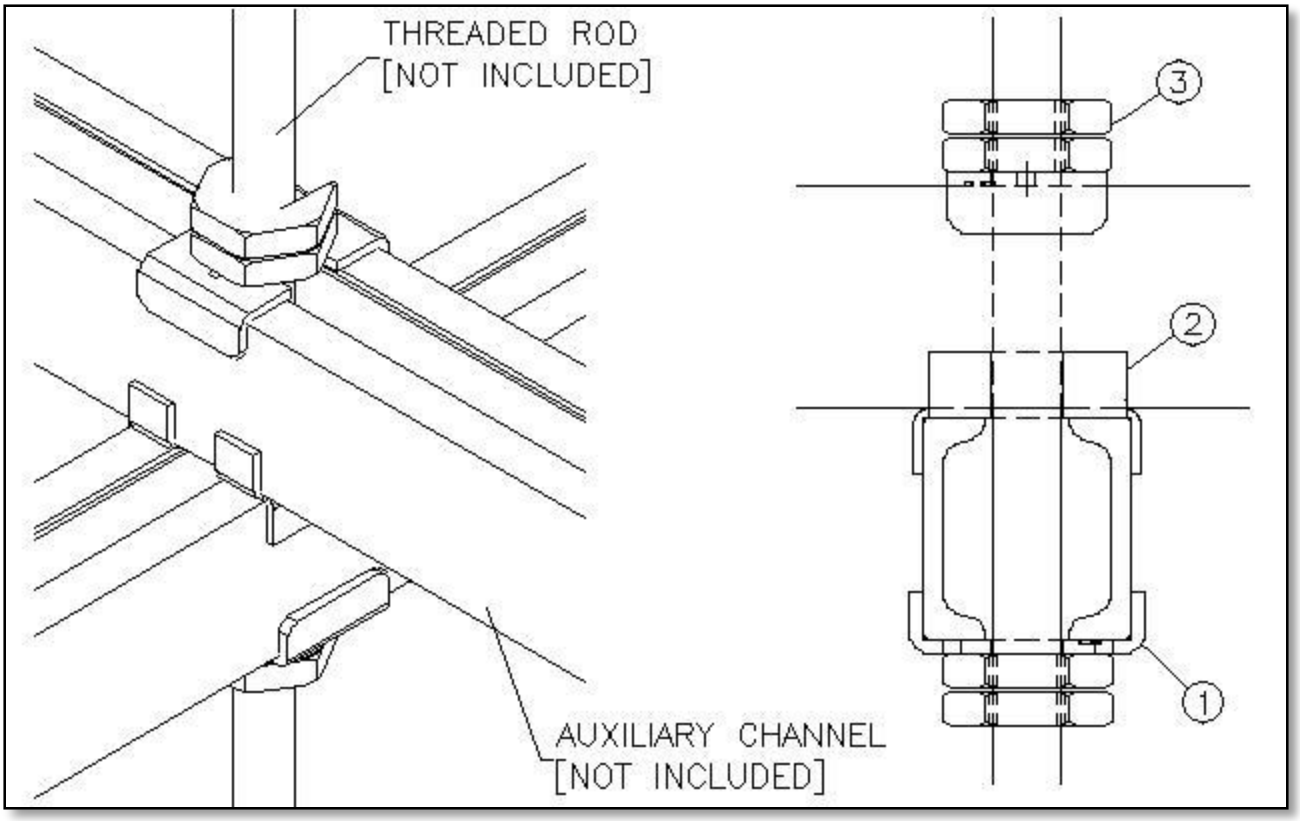

FCA326 – CHANNEL CROSSOVER SLOTTED CLIP ASSEMBLY			
ITEM#	QTY	CSF#	DESCRIPTION
1	2	FC316S	FRAMING CLIP SLOTTED
2	1	FC326S	FRAMING CHANNEL CROSSOVER SLOTTED
3	2	HNS62	5/8-11 SPLIT LOCKING HEX NUT ZY

NOTES:
- AUX. FRAMING NOT INCLUDED
- THREADED ROD NOT INCLUDED
- FINISH: ZINC AND YELLOW

Specifications subject to change. Please contact CSF Customer Service for more information.
© copyright 2004 Central Steel Fabricators, Inc.
http://www.centralsteelfab.com ◆ 2100 Parkes Drive, Broadview, IL 60155
Phone: 708-652-2037 Fax: 708-652-7010

AFT4119XXK – HEAVY DUTY "T" JUNCTION KIT EQ.

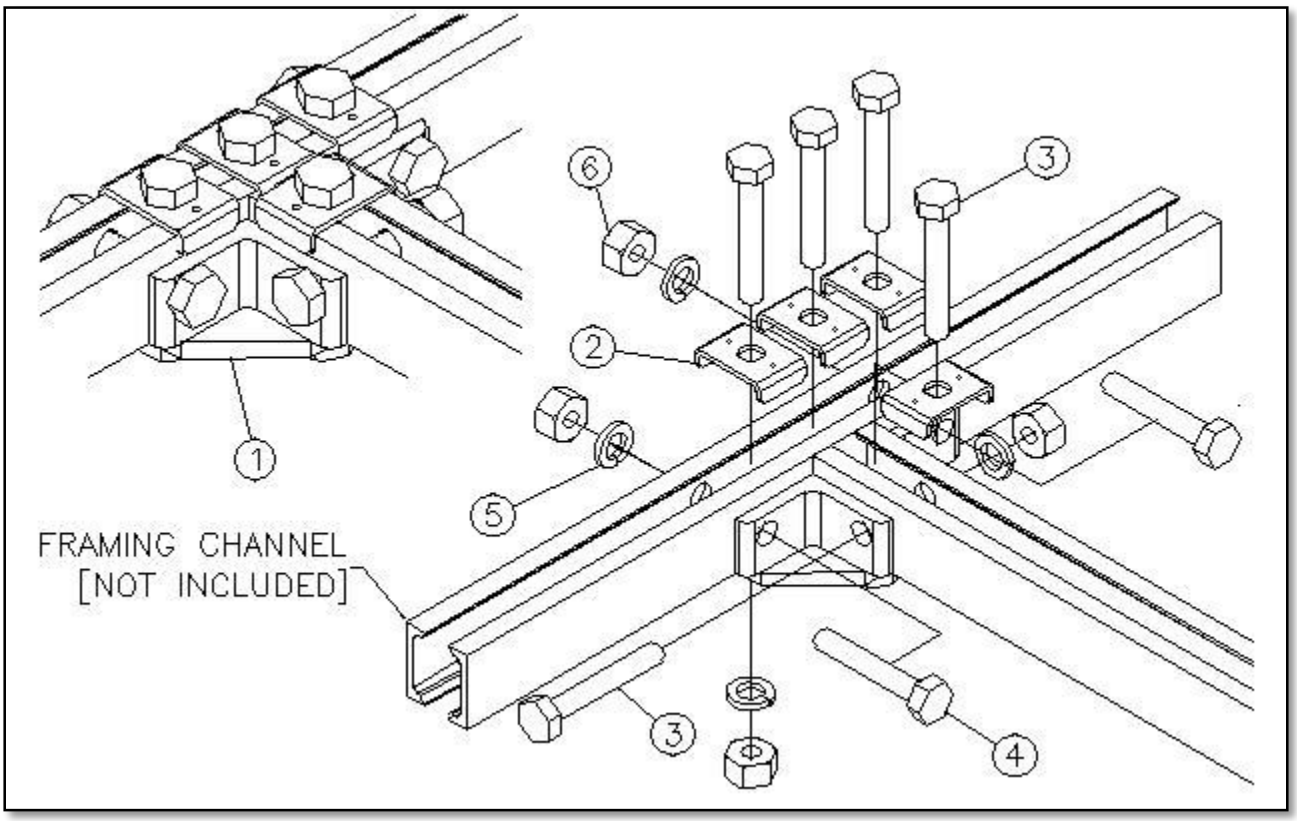

AFT4119XXK – HEAVY DUTY "T" JUNCTION KIT EQ.			
ITEM#	QTY	CSF#	DESCRIPTION
1	1	AFT4119XX	HEAVY DUTY "T" JUNCTION BRACKET EQ.
2	4	FC316	FRAMING CLIP FOR 5/8" HARDWARE – ZY
3	5	HH1211	5/8-11 HHCS X 3.50" LG. – ZY
4	2	HH1210	5/8-11 HHCS X 3.25" LG. – ZY
5	7	LW158	5/8" SPRING LOCKWASHER - ZY
6	7	HN148	5/8-11 HEX NUT - ZY

NOTES:
- AUX. FRAMING NOT INCLUDED
- COLORS: DG OR ZY

Specifications subject to change. Please contact CSF Customer Service for more information.
© copyright 2004 Central Steel Fabricators, Inc.
http://www.centralsteelfab.com ◆ 2100 Parkes Drive, Broadview, IL 60155
Phone: 708-652-2037 Fax: 708-652-7010

Contents

• Cable Racks
• 1-1/2” Cable Rack Solid Bar / Bar
• 1-1/2” Cable Rack Channel / Channel
• 1-1/2” Cable Rack Tube / Channel
• 2” Cable Rack Channel / Channel
• 2” Cable Rack Solid Bar / Channel
• 2” Cable Rack Tube / Channel
• 1-1/2” Solid Bar 90 Degree Outside Cable Rack
• 2” Solid Bar 90 Degree Outside Cable Rack
• 1-1/2” Solid Bar 90 Degree Inside Cable Rack
• 2” Solid Bar 90 Degree Inside Cable Rack
• Tubular Cable Rack 90 Degree Sweep
• Tubular Cable Rack 90 Degree Turn
• Pre-Drilled Earthquake Mount Solid Bar Cable Rack
• Aux. Cable Brackets
• Aux. Cable Brackets

• ACB9R Aux. Cable Bracket
• Aux. Conduit Mounting kit
• CCXX Corner Clamp Kits
• End Closing Bar For 1-1/2” And 2” Cable Rack
• End Closing Tube For 1-1/2 And 2” Cable Rack
• JBA38XX J-Bolt Assembly With Plate
• JBA390X J-Bolt Assembly
• SCE825 Seismic Cable Rack Splice 1-1/2” And 2” Stringer
• HRN Series Bar Horn Kit
• Wire Horn Kit
• Offset Wire Horn Kit – WHXXB
• Compartment Kit – WH08C
• 8.00” Wire Horn Divider Kit ZY
• CCXXCN Corner Clamp Kit For 1-1/2” And 2” Stringer
• Straight Clamp Kit For 1-1/2” And 2” Stringer
• Straight Clamp Kit Different Width Stringers Continuity
• ACS08KCN Aux. Channel Splice Kit
• SAF3002CN Aux. Channel Splice Kit 2 – Bolt Continuity
• Cable Guide Assembly - CGA02250 Kit
• Cable Guide Assembly - CGA05775 Kit
• Cable Guide Assembly - CGA07500 Kit
• Cable Guide Assembly – CGA107750 Kit
• Distribution Plastic Posts Kit – DPP03K4 Kit

Specifications subject to change. Please contact CSF Customer Service for more information.
© copyright 2004 Central Steel Fabricators, Inc.
http://www.centralsteelfab.com ◆ 2100 Parkes Drive, Broadview, IL 60155
Phone: 708-652-2037 Fax: 708-652-7010

Cable Rack Series

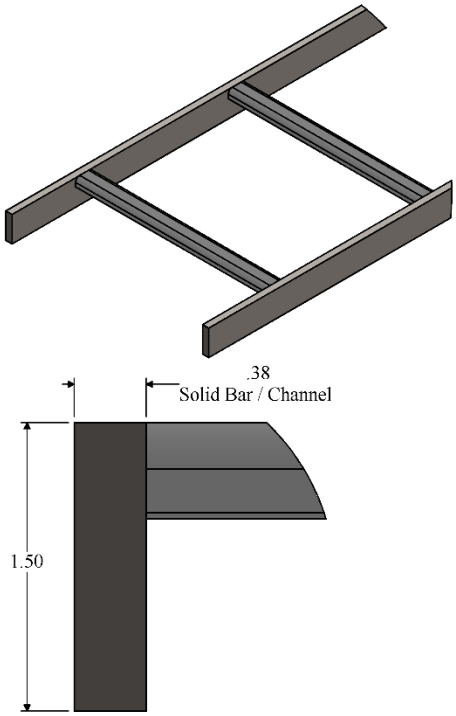

110xx Series - Solid Bar/ Channel

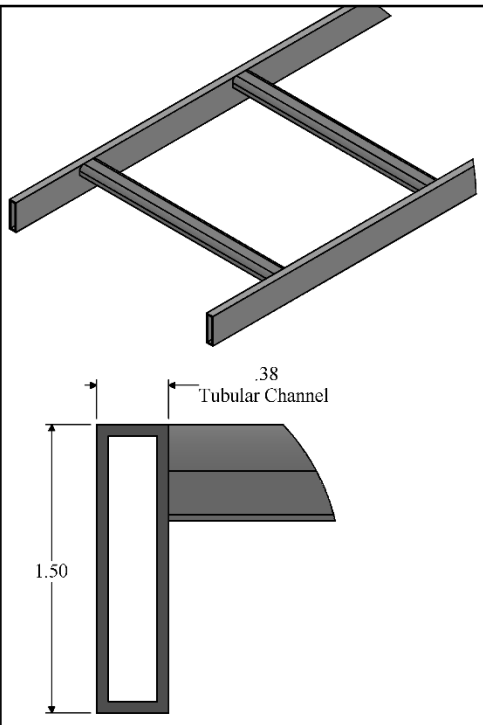

100xx Series - Tubular Channel

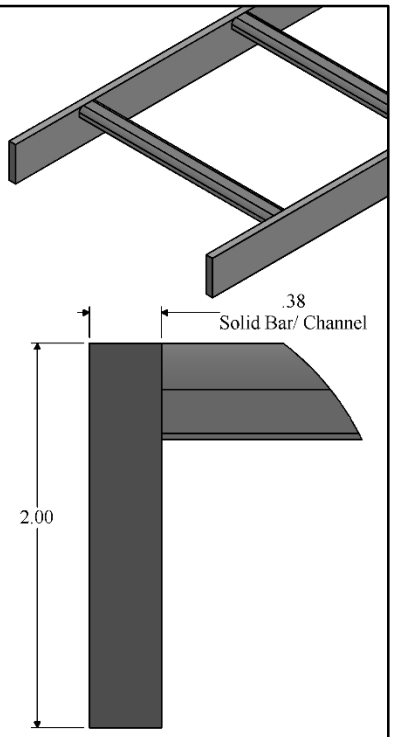

210xx Series - Solid Bar/ Channel

Cable Rack Series	
CSF#	Description
110xx Series	1.50” Cable Rack Solid Bar/ Channel
100xx Series	1.50” Cable Rack Tubular Channel
210xx Series	2.00” Cable Rack Solid Bar/ Channel

Notes:
- All Cable Racks are 116.50” in length.

RVSD*0217

Specifications subject to change. Please contact CSF Customer Service for more information.

© copyright 2004 Central Steel Fabricators, Inc.
http://www.centralsteelfab.com ◆ 2100 Parkes Drive, Broadview, IL 60155
Phone: 708-652-2037 Fax: 708-652-7010

1.50" CABLE RACK CHANNEL/CHANNEL

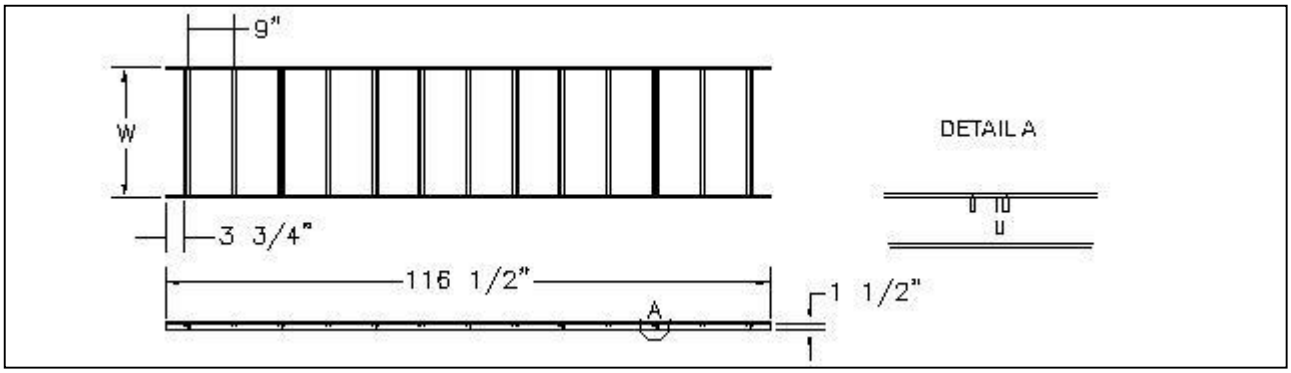

PART#	"W" WIDTH
12005	5.00"
12006	6.00"
12009	9.00"
12010	10.00"
12011	11.00"
12012	12.00"
12015	15.00"
12018	18.00"
12020	20.00"
12021	21.00"
12024	24.00"
12025	25.00"
12027	27.00"
12030	30.00"
12036	36.00"

NOTES:
- ALTERNATE CROSS MEMBERS HAVE REINFORCING RIB ON 25" WIDTH AND UP
-THIS PRODUCT COLOR DEFAULTS TO DG, OTHER COLORS AVAILABLE UPON REQUEST. -OTHER WIDTHS AVAILABLE UPON REQUEST

Specifications subject to change. Please contact CSF Customer Service for more information.
© copyright 2004 Central Steel Fabricators, Inc.
http://www.centralsteelfab.com ◆ 2100 Parkes Drive, Broadview, IL 60155
Phone: 708-652-2037 Fax: 708-652-7010

110xx Series - 1.50" Cable Rack Solid Bar/ Channel

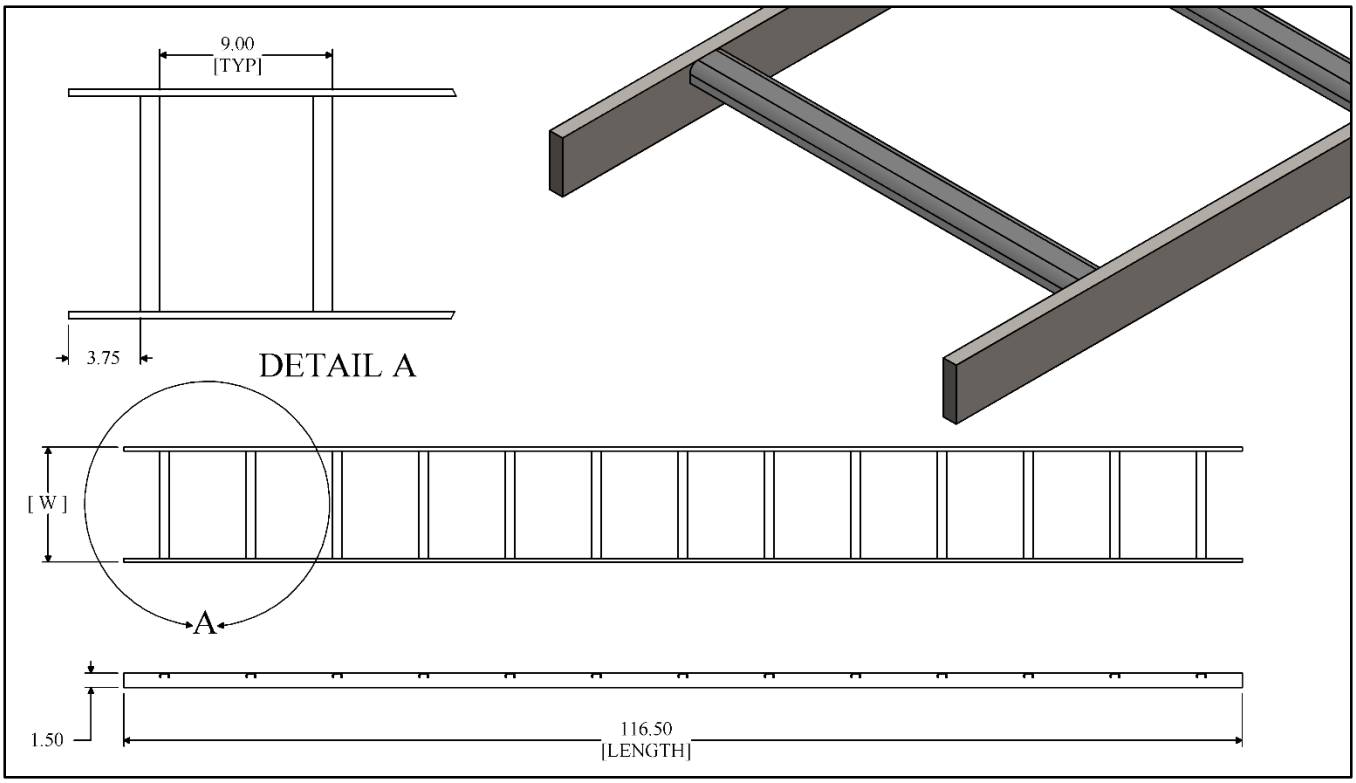

110XX Series – 1.50" x [w] x 116.50 Length - Cable Rack Solid Bar/ Channel		
CSF#	Description	Width [W]
11005	Cable Rack Solid Bar/ Channel	5.00"
11006	Cable Rack Solid Bar/ Channel	6.00"
11009	Cable Rack Solid Bar/ Channel	9.00"
11010	Cable Rack Solid Bar/ Channel	10.00"
11012	Cable Rack Solid Bar/ Channel	12.00"
11015	Cable Rack Solid Bar/ Channel	15.00"
11018	Cable Rack Solid Bar/ Channel	18.00"
11020	Cable Rack Solid Bar/ Channel	20.00"
11024	Cable Rack Solid Bar/ Channel	24.00"
11025	Cable Rack Solid Bar/ Channel	25.00"
11030	Cable Rack Solid Bar/ Channel	30.00"
11036	Cable Rack Solid Bar/ Channel	36.00"

Notes:
- Alternate cross members have reinforcing rib on 25.00"width and up.
- This product color defaults to DG, other colors available upon request.
- Other widths available upon request.

RVSD*0217

Specifications subject to change. Please contact CSF Customer Service for more information.

© copyright 2004 Central Steel Fabricators, Inc.
http://www.centralsteelfab.com ◆ 2100 Parkes Drive, Broadview, IL 60155
Phone: 708-652-2037 Fax: 708-652-7010

100xx Series - 1.50" Cable Rack Tubular Channel

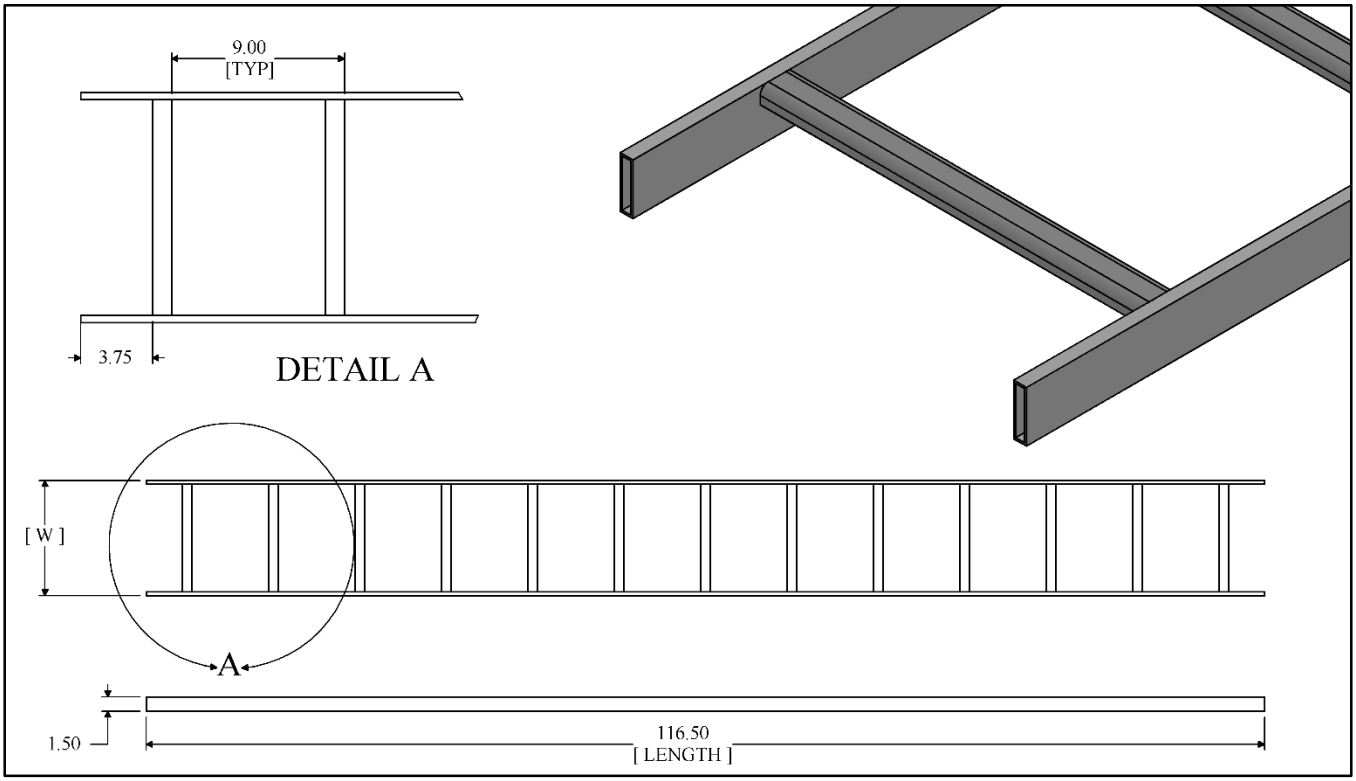

100XX Series – 1.50" x [w] x 116.50 Length - Cable Rack Tubular Channel		
CSF#	Description	Width [W]
10005	Cable Rack Tubular Channel	5.00"
10006	Cable Rack Tubular Channel	6.00"
10009	Cable Rack Tubular Channel	9.00"
10010	Cable Rack Tubular Channel	10.00"
10012	Cable Rack Tubular Channel	12.00"
10015	Cable Rack Tubular Channel	15.00"
10018	Cable Rack Tubular Channel	18.00"
10020	Cable Rack Tubular Channel	20.00"
10024	Cable Rack Tubular Channel	24.00"
10025	Cable Rack Tubular Channel	25.00"
10030	Cable Rack Tubular Channel	30.00"
10036	Cable Rack Tubular Channel	36.00"

Notes:
- Zinc and yellow finish is UL grounding conductor classified.
- Alternate cross members have reinforcing rib on 25.00"width and up.
- This product color defaults to DG, other colors available upon request.
- Other widths available upon request.

RVSD*0217

Specifications subject to change. Please contact CSF Customer Service for more information.

© copyright 2004 Central Steel Fabricators, Inc.
http://www.centralsteelfab.com ◆ 2100 Parkes Drive, Broadview, IL 60155
Phone: 708-652-2037 Fax: 708-652-7010

2.00" CABLE RACK CHANNEL/CHANNEL

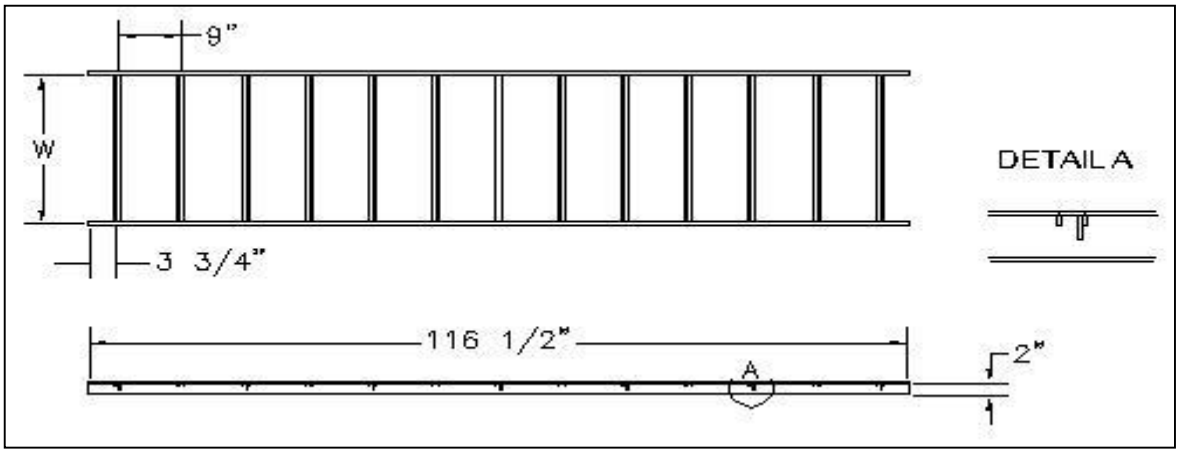

PART#	"W" WIDTH
22005	5.00"
22006	6.00"
22009	9.00"
22010	10.00"
22011	11.00"
22012	12.00"
22015	15.00"
22018	18.00"
21020	20.00"
22021	21.00"
22024	24.00"
22025	25.00"
22027	27.00"
22030	30.00"
21036	36.00"

NOTES:

- ALTERNATE CROSS MEMBERS HAVE REINFORCING RIB ON 25" WIDTH AND UP

- THIS PRODUCT COLOR DEFAULTS TO DG, OTHER COLORS AVAILABLE UPON REQUEST.
-OTHER WIDTHS AVAILABLE UPON REQUEST

Specifications subject to change. Please contact CSF Customer Service for more information.
© copyright 2004 Central Steel Fabricators, Inc.
http://www.centralsteelfab.com ◆ 2100 Parkes Drive, Broadview, IL 60155
Phone: 708-652-2037 Fax: 708-652-7010

210xx Series - 2.00" Cable Rack Solid Bar/ Channel

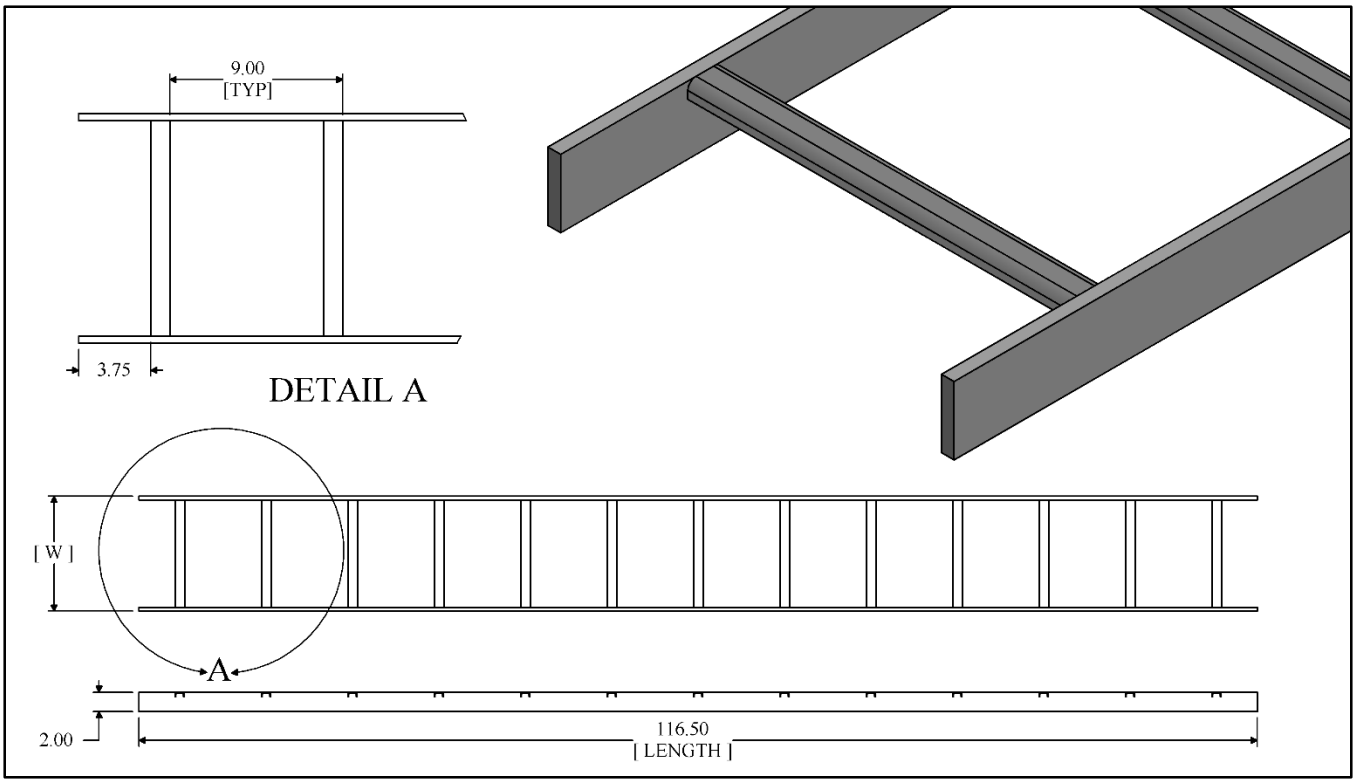

210XX Series – 2.00" x [w] x 116.50 Length - Cable Rack Solid Bar/ Channel		
CSF#	Description	Width [W]
21005	Cable Rack Solid Bar/ Channel	5.00"
21006	Cable Rack Solid Bar/ Channel	6.00"
21009	Cable Rack Solid Bar/ Channel	9.00"
21010	Cable Rack Solid Bar/ Channel	10.00"
21012	Cable Rack Solid Bar/ Channel	12.00"
21015	Cable Rack Solid Bar/ Channel	15.00"
21018	Cable Rack Solid Bar/ Channel	18.00"
21020	Cable Rack Solid Bar/ Channel	20.00"
21024	Cable Rack Solid Bar/ Channel	24.00"
21025	Cable Rack Solid Bar/ Channel	25.00"
21030	Cable Rack Solid Bar/ Channel	30.00"
21036	Cable Rack Solid Bar/ Channel	36.00"

Notes:
- Alternate cross members have reinforcing rib on 25.00"width and up.
- This product color defaults to DG, other colors available upon request.
- Other widths available upon request.

RVSD*0217

Specifications subject to change. Please contact CSF Customer Service for more information.

© copyright 2004 Central Steel Fabricators, Inc.
http://www.centralsteelfab.com ◆ 2100 Parkes Drive, Broadview, IL 60155
Phone: 708-652-2037 Fax: 708-652-7010

2.00" CABLE RACK TUBE/CHANNEL

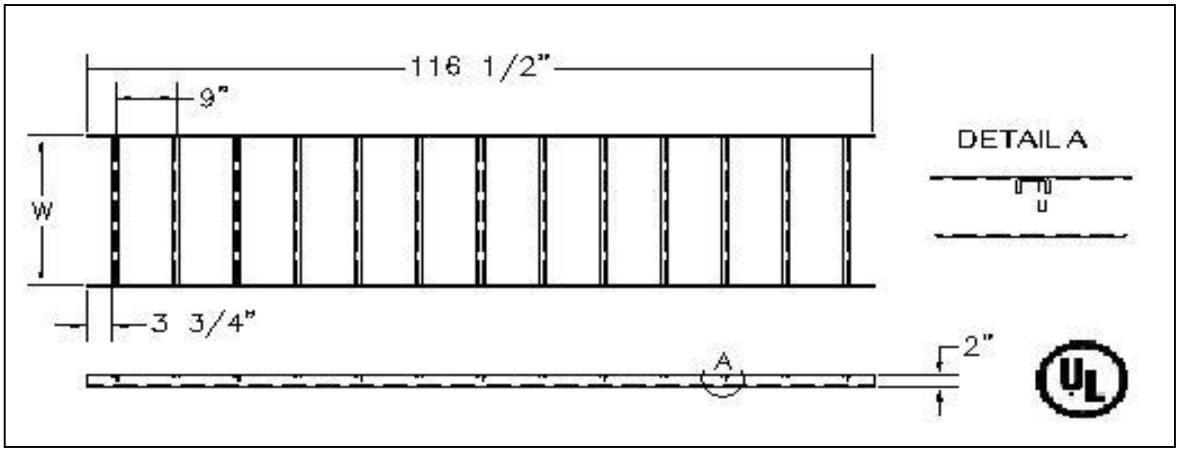

PART#	"W" WIDTH
20005	5.00"
20006	6.00"
20009	9.00"
20010	10.00"
20011	11.00"
20012	12.00"
20015	15.00"
20018	18.00"
20020	20.00"
20021	21.00"
20024	24.00"
20025	25.00"
20027	27.00"
20030	30.00"
20036	36.00"

NOTES:
- ZINC AND YELLOW FINISH IS UL GROUNDING CONDUCTOR CLASSIFIED
- ALTERNATE CROSS MEMBERS HAVE REINFORCING RIB ON 25" WIDTH AND UP
-THIS PRODUCT COLOR DEFAULTS TO DG, OTHER COLORS AVAILABLE UPON REQUEST. -OTHER WIDTHS AVAILABLE UPON REQUEST

Specifications subject to change. Please contact CSF Customer Service for more information.
© copyright 2004 Central Steel Fabricators, Inc.
http://www.centralsteelfab.com ◆ 2100 Parkes Drive, Broadview, IL 60155
Phone: 708-652-2037 Fax: 708-652-7010

2.00” T/C CABLE RACK [TUBULAR]

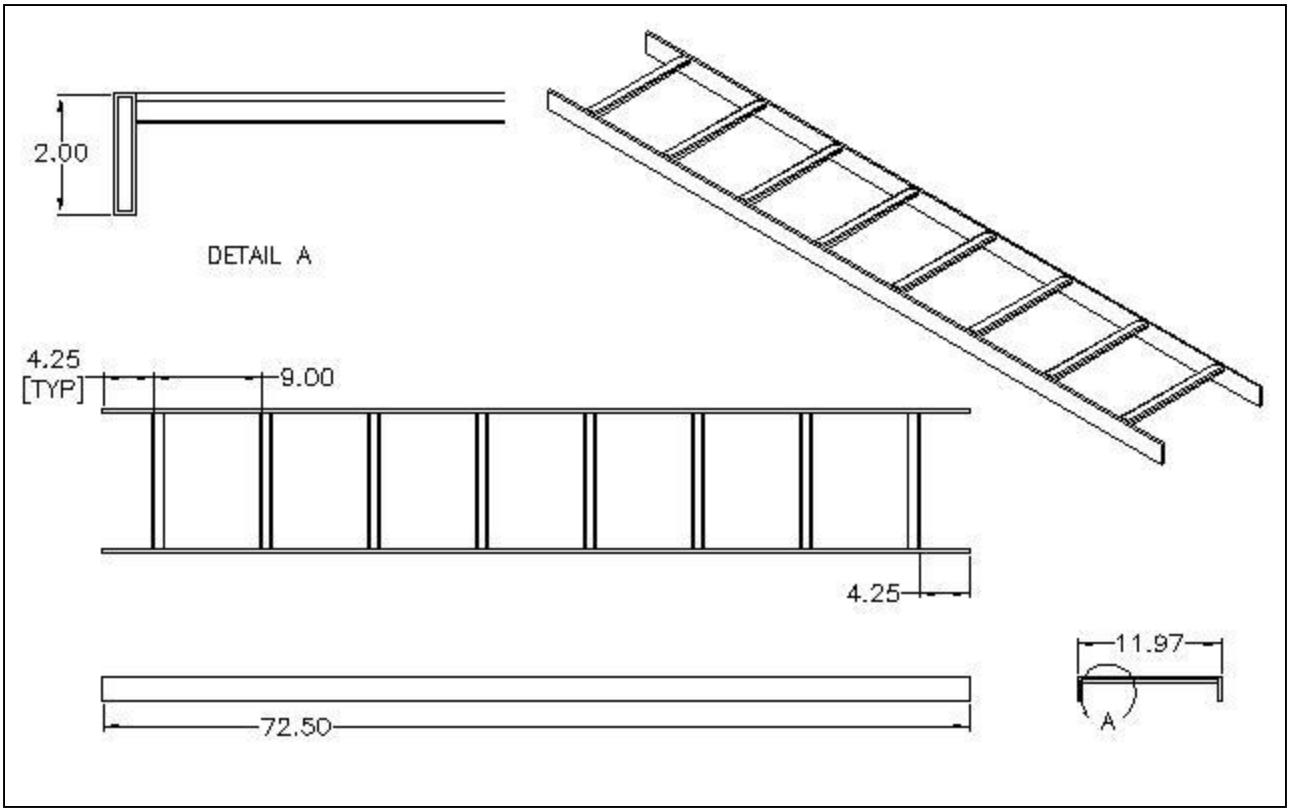

PART#	DESCRIPTION
20012i-725	2.00” X 12.00” X 72.50” T/C CABLE RACK [TUBULAR]

NOTES:
- ZINC AND YELLOW FINISH IS UL GROUNDING CONDUCTOR CLASSIFIED
-THIS PRODUCT COLOR DEFAULTS TO DG, OTHER COLORS AVAILABLE UPON REQUEST. -OTHER WIDTHS AVAILABLE UPON REQUEST

Specifications subject to change. Please contact CSF Customer Service for more information.
© copyright 2004 Central Steel Fabricators, Inc.
http://www.centralsteelfab.com ◆ 2100 Parkes Drive, Broadview, IL 60155
Phone: 708-652-2037 Fax: 708-652-7010

1.50" SOLID BAR 90 DEGREE OUTSIDE CABLE RACK

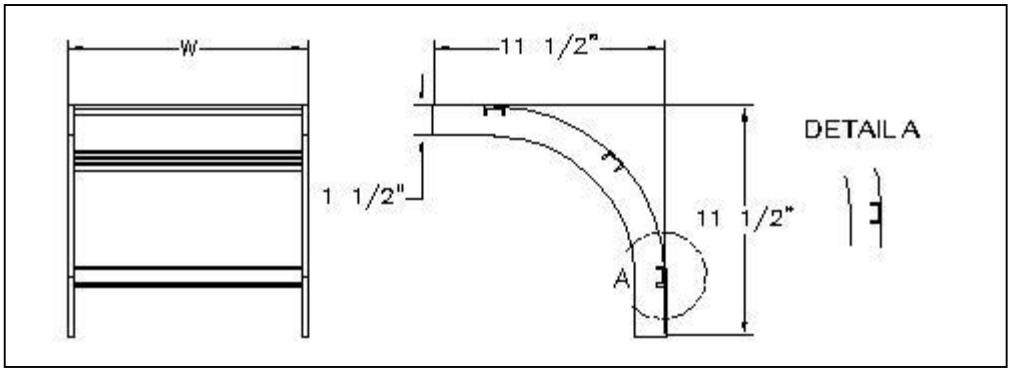

PART#	"W" WIDTH
11305XX	5.00"
11306XX	6.00"
11309XX	9.00"
11310XX	10.00"
11311XX	11.00"
11312XX	12.00"
11315XX	15.00"
11318XX	18.00”
11320XX	20.00"
11321XX	21.00"
11324XX	24.00"
11325XX	25.00"
11327XX	27.00"
11330XX	30.00"
11336XX	36.00"

NOTES:
- ZINC AND YELLOW PLATING IS UL GROUNDING CONDUCTOR CLASSIFIED
-ALTERNATE CROSS MEMBERS HAVE REINFORCING RIB ON 25" WIDTH AND UP
-OTHER WIDTHS AND FINISHES AVAILABLE UPON REQUEST
-CERTAIN SIZES SUBJECT TO MINIMUM ORDER QUANTITIES AND LONGER LEAD-TIMES

Specifications subject to change. Please contact CSF Customer Service for more information.
© copyright 2004 Central Steel Fabricators, Inc.
http://www.centralsteelfab.com ◆ 2100 Parkes Drive, Broadview, IL 60155
Phone: 708-652-2037 Fax: 708-652-7010

2.00" SOLID BAR 90 DEGREE OUTSIDE CABLE RACK

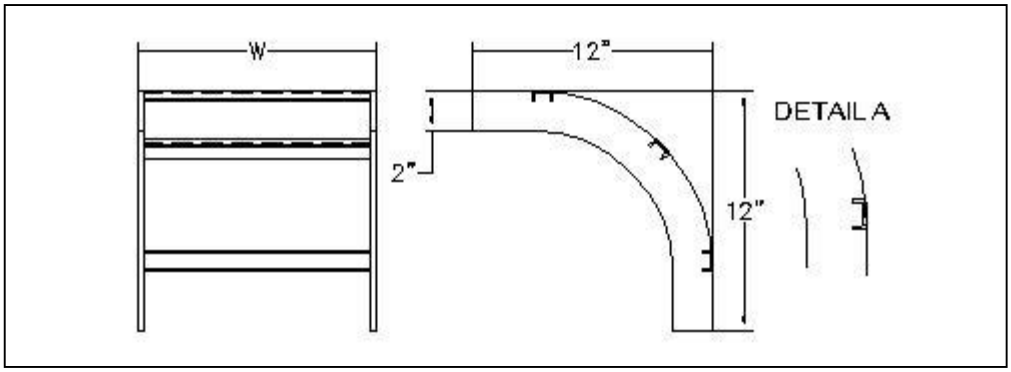

PART#	"W" WIDTH
21305XX	5"
21306XX	6"
21309XX	9"
21310XX	10"
21311XX	11"
21312XX	12"
21315XX	15"
21318XX	18"
21320XX	20"
21321XX	21"
21324XX	24"
21325XX	25"
21327XX	27"
21330XX	30"
21336XX	36"

NOTES:
- ALTERNATE CROSS MEMBERS HAVE REINFORCING RIB ON 25" WIDTH AND UP
- OTHER WIDTHS AND FINISHES AVAILABLE UPON REQUEST
- CERTAIN SIZES SUBJECT TO MINIMUM ORDER QUANTITIES AND LONGER LEAD-TIMES

Specifications subject to change. Please contact CSF Customer Service for more information.
© copyright 2004 Central Steel Fabricators, Inc.
http://www.centralsteelfab.com ◆ 2100 Parkes Drive, Broadview, IL 60155
Phone: 708-652-2037 Fax: 708-652-7010

1.50" SOLID BAR 90 DEGREE INSIDE CABLE RACK

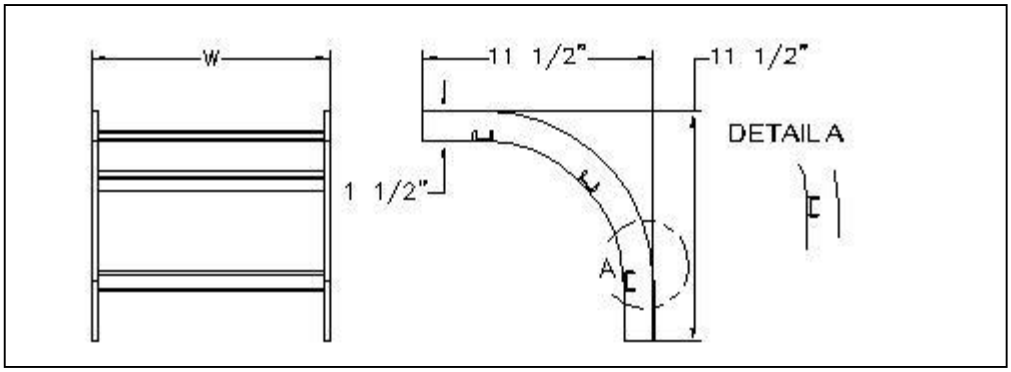

PART#	"W" WIDTH
11405XX	5.00"
11406XX	6.00"
11409XX	9.00"
11410XX	10.00"
11411XX	11.00"
11412XX	12.00"
11415XX	15.00"
11418XX	18.00"
11420XX	20.00"
11421XX	21.00"
11424XX	24.00"
11425XX	25.00"
11427XX	27.00"
11430XX	30.00"
11436XX	36.00"

NOTES:
- ZINC AND YELLOW PLATING IS UL GROUNDING CONDUCTOR CLASSIFIED
- ALTERNATE CROSS MEMBERS HAVE REINFORCING RIB ON 25" WIDTH AND UP
- OTHER WIDTHS AND FINISHES AVAILABLE UPON REQUEST
- CERTAIN SIZES SUBJECT TO MINIMUM ORDER QUANTITIES AND LONGER LEAD-TIMES

Specifications subject to change. Please contact CSF Customer Service for more information.
© copyright 2004 Central Steel Fabricators, Inc.
http://www.centralsteelfab.com ◆ 2100 Parkes Drive, Broadview, IL 60155
Phone: 708-652-2037 Fax: 708-652-7010

2.00" SOLID BAR 90 DEGREE INSIDE CABLE RACK

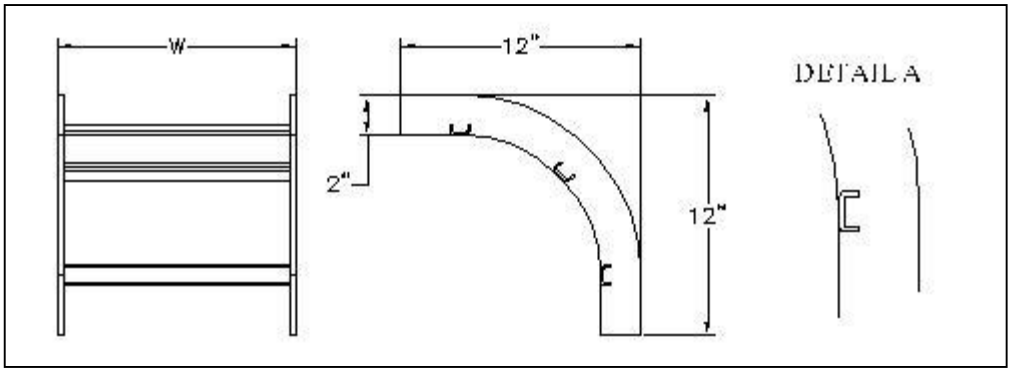

PART#	"W" WIDTH
21405XX	5"
21406XX	6"
21409XX	9"
21410XX	10"
21411XX	11"
21412XX	12"
21415XX	15"
21418XX	18"
21420XX	20"
21421XX	21"
21424XX	24"
21425XX	25"
21427XX	27"
21430XX	30"
21436XX	36"

NOTES:
- ALTERNATE CROSS MEMBERS HAVE REINFORCING RIB ON 25" WIDTH AND UP
- OTHER WIDTHS AND FINISHES AVAILABLE UPON REQUEST
- CERTAIN SIZES SUBJECT TO MINIMUM ORDER QUANTITIES AND LONGER LEAD-TIMES

Specifications subject to change. Please contact CSF Customer Service for more information.
© copyright 2004 Central Steel Fabricators, Inc.
http://www.centralsteelfab.com ◆ 2100 Parkes Drive, Broadview, IL 60155
Phone: 708-652-2037 Fax: 708-652-7010

TUBULAR CABLE RACK 90 DEGREE SWEEP

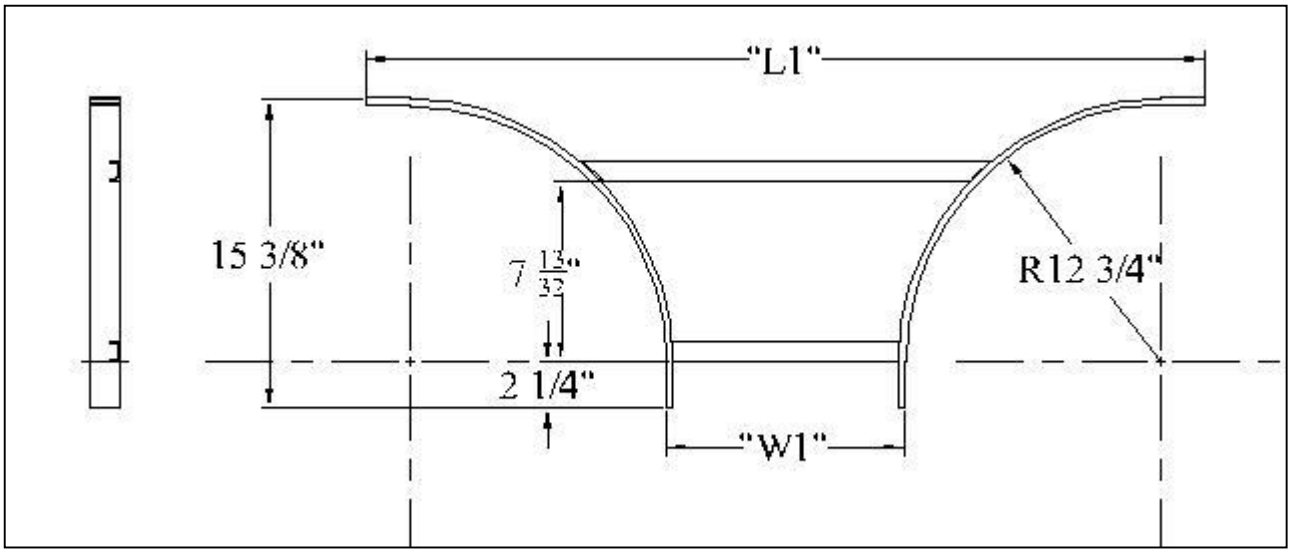

CSF #	"W1" WIDTH	"L1" LENGTH
30812SXX	12"	48"

NOTES:
- ZINC AND YELLOW PLATING IS UL GROUNDING CONDUCTOR CLASSIFIED
- OTHER SIZES AND FINISHES AVAILABLE UPON REQUEST
- CERTAIN SIZES SUBJECT TO MINIMUM ORDER QUANTITIES AND LONGER LEAD-TIMES

Specifications subject to change. Please contact CSF Customer Service for more information.
© copyright 2004 Central Steel Fabricators, Inc.
http://www.centralsteelfab.com ◆ 2100 Parkes Drive, Broadview, IL 60155
Phone: 708-652-2037 Fax: 708-652-7010

TUBULAR CABLE RACK 90 DEGREE TURN

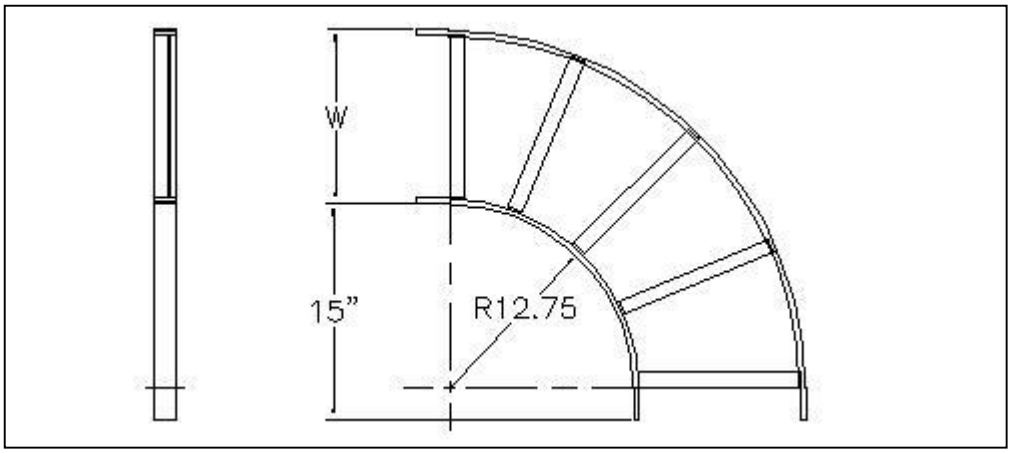

CSF#	"W" WIDTH
68012XX	12"

NOTES:
- ZINC AND YELLOW PLATING IS UL GROUNDING CONDUCTOR CLASSIFIED
- OTHER SIZES AND FINISHES AVAILABLE UPON REQUEST
- CERTAIN SIZES SUBJECT TO MINIMUM ORDER QUANTITIES AND LONGER LEAD-TIMES

Specifications subject to change. Please contact CSF Customer Service for more information.
© copyright 2004 Central Steel Fabricators, Inc.
http://www.centralsteelfab.com ◆ 2100 Parkes Drive, Broadview, IL 60155 ◆
Phone: 708-652-2037 Fax: 708-652-7010

PREDRILLED EARTHQUAKE MOUNT SOLID BAR CABLE RACKS

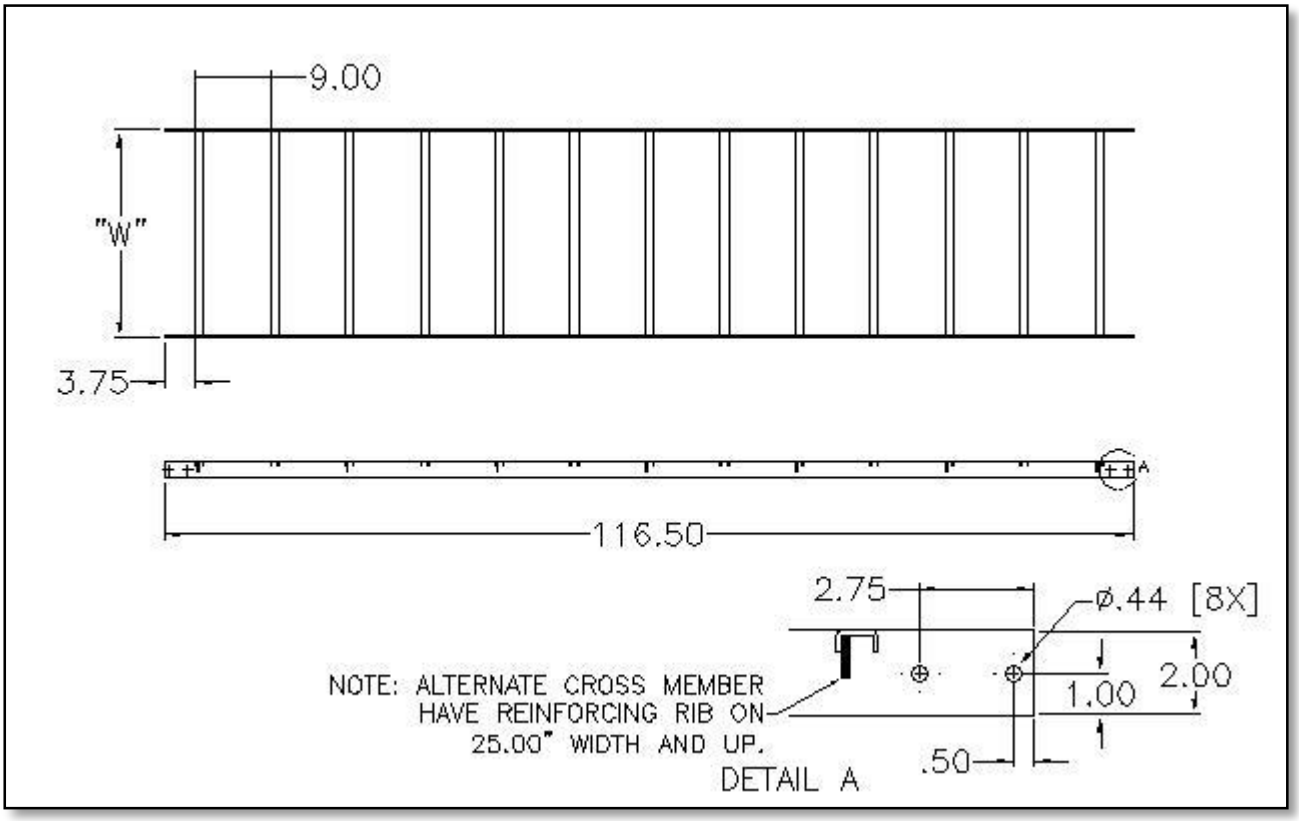

PART#	DESCRIPTION "W"
46005	CABLE RACK PUNCHED 2.00" X 5.00" X 116.50" LG.
46006	CABLE RACK PUNCHED 2.00" X 6.00" X 116.50" LG.
46009	CABLE RACK PUNCHED 2.00" X 9.00" X 116.50" LG.
46010	CABLE RACK PUNCHED 2.00" X 10.00" X 116.50" LG.
46011	CABLE RACK PUNCHED 2.00" X 11.00" X 116.50" LG.
46012	CABLE RACK PUNCHED 2.00" X 12.00" X 116.50" LG.
46015	CABLE RACK PUNCHED 2.00" X 15.00" X 116.50" LG.
46018	CABLE RACK PUNCHED 2.00" X 18.00" X 116.50" LG.
46020	CABLE RACK PUNCHED 2.00" X 20.00" X 116.50" LG.
46021	CABLE RACK PUNCHED 2.00" X 21.00" X 116.50" LG.
46024	CABLE RACK PUNCHED 2.00" X 24.00" X 116.50" LG.
46025	CABLE RACK PUNCHED 2.00" X 25.00" X 116.50" LG.
46027	CABLE RACK PUNCHED 2.00" X 27.00" X 116.50" LG.
46030	CABLE RACK PUNCHED 2.00" X 30.00" X 116.50" LG.
46036	CABLE RACK PUNCHED 2.00" X 36.00" X 116.50" LG.

FINISH SUFFIX	POWER COAT PAINT FINISH
CB	CENTRAL OFFICE BLUE
DG	DARK GRAY

OTHER SIZES AND FINISHES AVAILABLE UPON REQUEST

Specifications subject to change. Please contact CSF Customer Service for more information.

© copyright 2004 Central Steel Fabricators, Inc.
http://www.centralsteelfab.com ◆ 2100 Parkes Drive, Broadview, IL 60155
Phone: 708-652-2037 Fax: 708-652-7010

Auxiliary Cable Brackets Series Selection

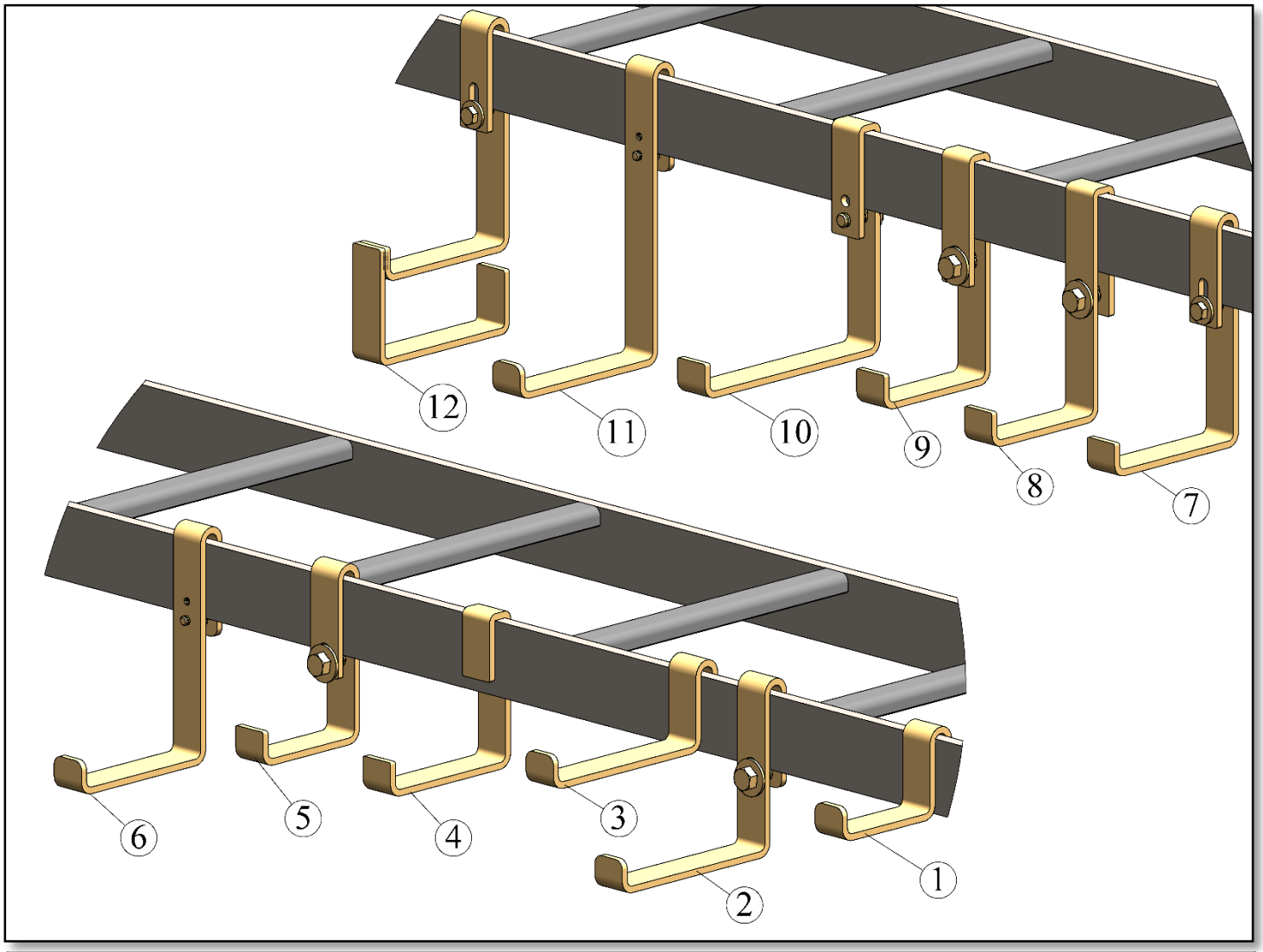

Auxiliary Cable Brackets Series Selection		
Item#	CSF#	Description
1	ACB1s	Auxiliary Cable Bracket [Drop 2.22" x Shelf 3.00"] mounts onto 1.50"/ 2.00" Cable Rack
2	ACB2	Auxiliary Cable Bracket [Drop 4.50" x Shelf 5.00"] mounts onto 1.50"/ 2.00" Cable Rack
3	ACB2s	Auxiliary Cable Bracket [Drop 2.22" x Shelf 5.00"] mounts onto 1.50"/ 2.00" Cable Rack
4	ACB44	Auxiliary Cable Bracket [Drop 4.00" x Shelf 4.00"] mounts onto 1.50"/ 2.00" Cable Rack [Reverse]
5	ACB53R	Auxiliary Cable Bracket [Drop 4.62" x Shelf 3.12"] mounts onto 1.50"/ 2.00" Cable Rack – [Reverse]
6	ACB6	Auxiliary Cable Bracket [Drop 6.06" x Shelf 4.12"] mounts onto 1.50"/ 2.00" Cable Rack
7	ACB6R	Auxiliary Cable Bracket [Drop 6.06" x Shelf 4.12"] mounts onto 1.50"/ 2.00" Cable Rack – [Reverse]
8	ACB63	Auxiliary Cable Bracket [Drop 6.00" x Shelf 3.50"] mounts onto 1.50"/ 2.00" Cable Rack
9	ACB63R	Auxiliary Cable Bracket [Drop 6.00" x Shelf 3.50"] mounts onto 1.50"/ 2.00" Cable Rack [Reverse]
10	ACB66R	Auxiliary Cable Bracket [Drop 6.00" x Shelf 6.00"] mounts onto 1.50"/ 2.00" Cable Rack [Reverse]
11	ACB8	Auxiliary Cable Bracket [Drop 7.81" x Shelf 4.62"] mounts onto 1.50"/ 2.00" Cable Rack
12	ACB9R	Auxiliary Cable Bracket [Drop 6.06" x Shelf 4.12"] mounts onto 1.50"/ 2.00" Cable Rack – [Reverse]

© copyright 2004 Central Steel Fabricators, Inc.
http://www.centralsteelfab.com ◆ 2100 Parkes Drive, Broadview, IL 60155
Phone: 708-652-2037 Fax: 708-652-7010

ACB1s - Auxiliary Cable Bracket

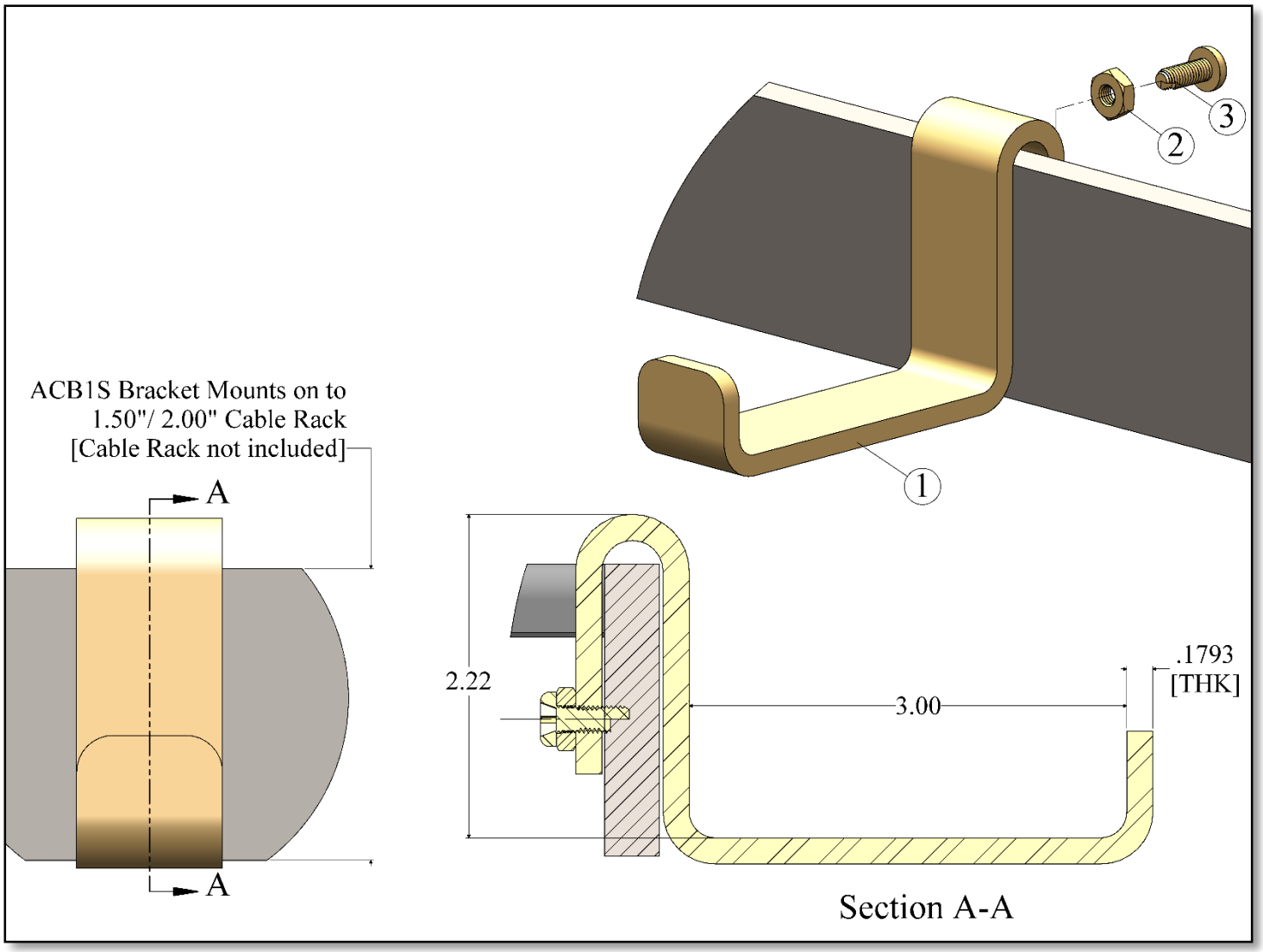

ACB1s - Auxiliary Cable Bracket		
Item#	CSF#	Description
1	ACB1s	Auxiliary Cable Bracket [Drop 2.22” x Shelf 3.00”] mounts onto 1.50”/ 2.00” Cable Rack
2	HN142	10-32 Hex Nut
3	PH0305FST	10-32 x .50” LG - Pan Head Phil Cutting

Notes:

- Finish Codes: See Tech Data for Paint Codes
- Also available [DG] Telephone Gray

RVSD*1017

Specifications subject to change. Please contact CSF Customer Service for more information.

© copyright 2004 Central Steel Fabricators, Inc.
http://www.centralsteelfab.com ◆ 2100 Parkes Drive, Broadview, IL 60155
Phone: 708-652-2037 Fax: 708-652-7010

ACB2 - Auxiliary Cable Bracket

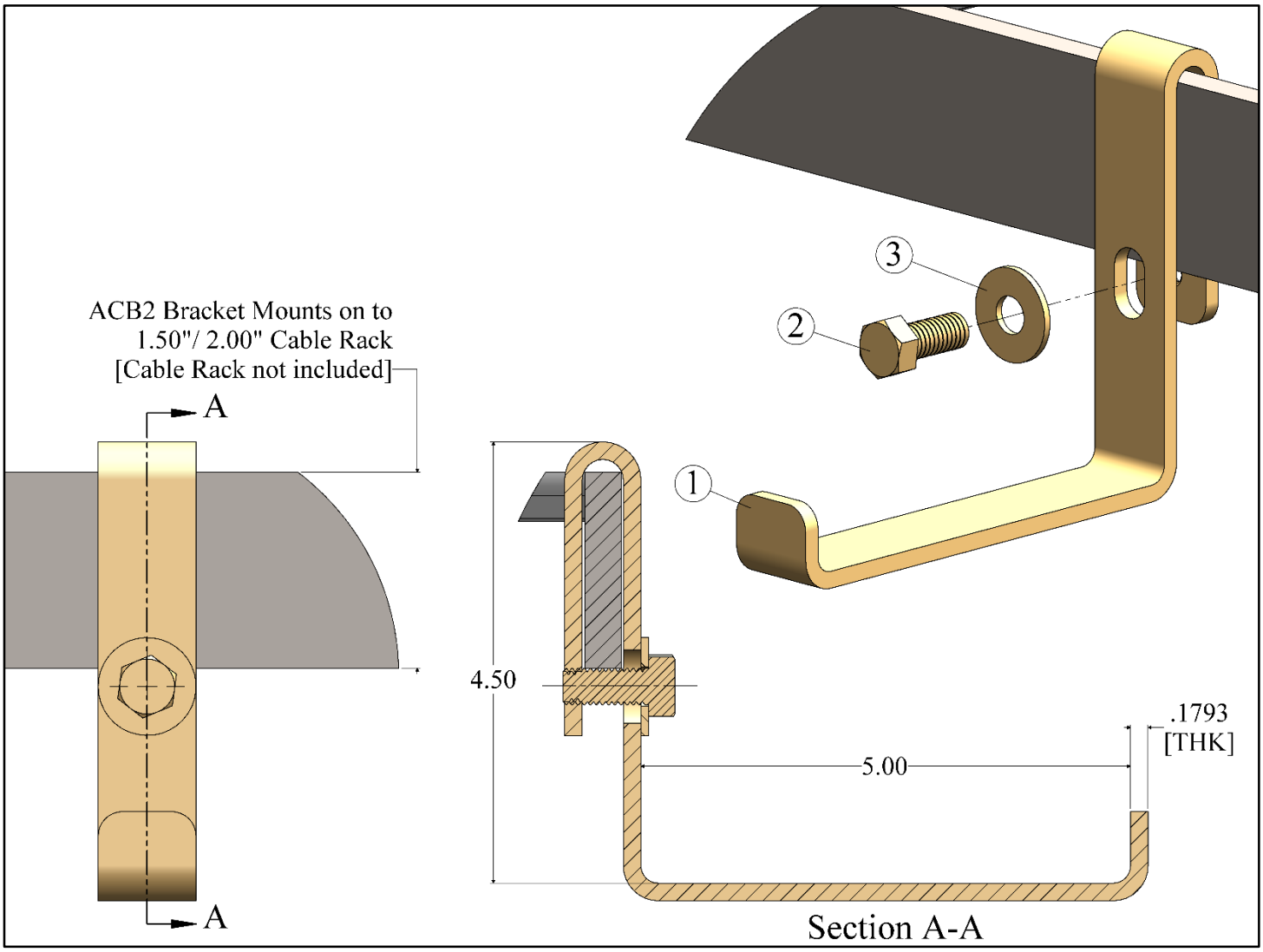

ACB2 - Auxiliary Cable Bracket		
Item#	CSF#	Description
1	ACB2	Auxiliary Cable Bracket [Drop 4.50” x Shelf 5.00”] mounts onto 1.50”/ 2.00” Cable Rack
2	HH1004	3/8-16 x .88” LG. - Hex Head Cap Screw
3	FW166	3/8” Flat Washer

Notes:

- Finish Codes: See Tech Data for Paint Codes
- Also available [DG] Telephone Gray

RVSD*1017

Specifications subject to change. Please contact CSF Customer Service for more information.

© copyright 2004 Central Steel Fabricators, Inc.
http://www.centralsteelfab.com ◆ 2100 Parkes Drive, Broadview, IL 60155
Phone: 708-652-2037 Fax: 708-652-7010

ACB2s - Auxiliary Cable Bracket

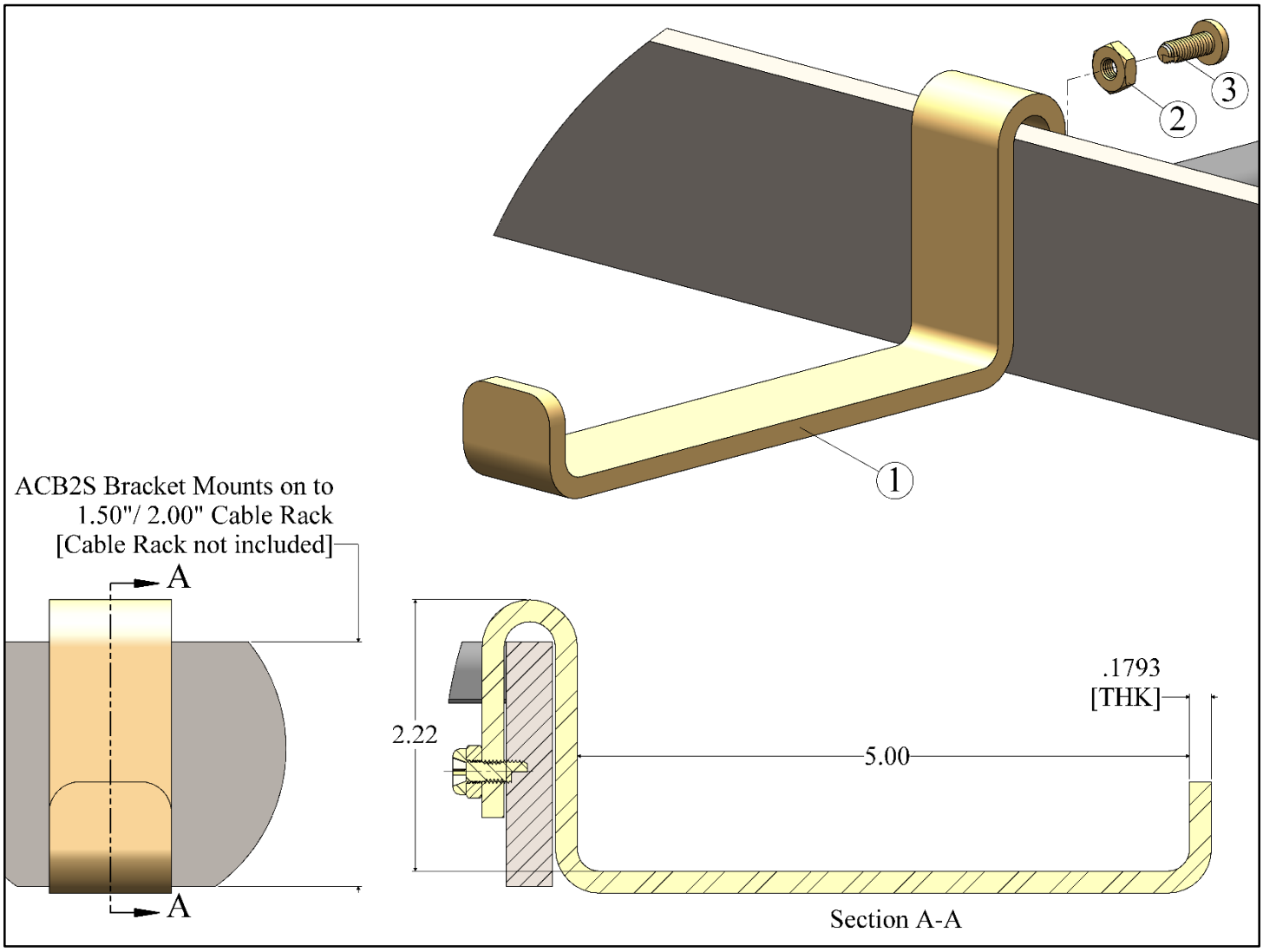

ACB2s - Auxiliary Cable Bracket		
Item#	CSF#	Description
1	ACB2s	Auxiliary Cable Bracket [Drop 2.22” x Shelf 5.00”] mounts onto 1.50”/ 2.00” Cable Rack
2	HN142	10-32 Hex Nut
3	PH0305FST	10-32 x .50” LG – Pan Head Phil Cutting

Notes:

- Finish Codes: See Tech Data for Paint Codes
- Also available [DG] Telephone Gray

RVSD*1017

Specifications subject to change. Please contact CSF Customer Service for more information.

© copyright 2004 Central Steel Fabricators, Inc.
http://www.centralsteelfab.com ◆ 2100 Parkes Drive, Broadview, IL 60155
Phone: 708-652-2037 Fax: 708-652-7010

ACB44 - Auxiliary Cable Bracket [Reverse]

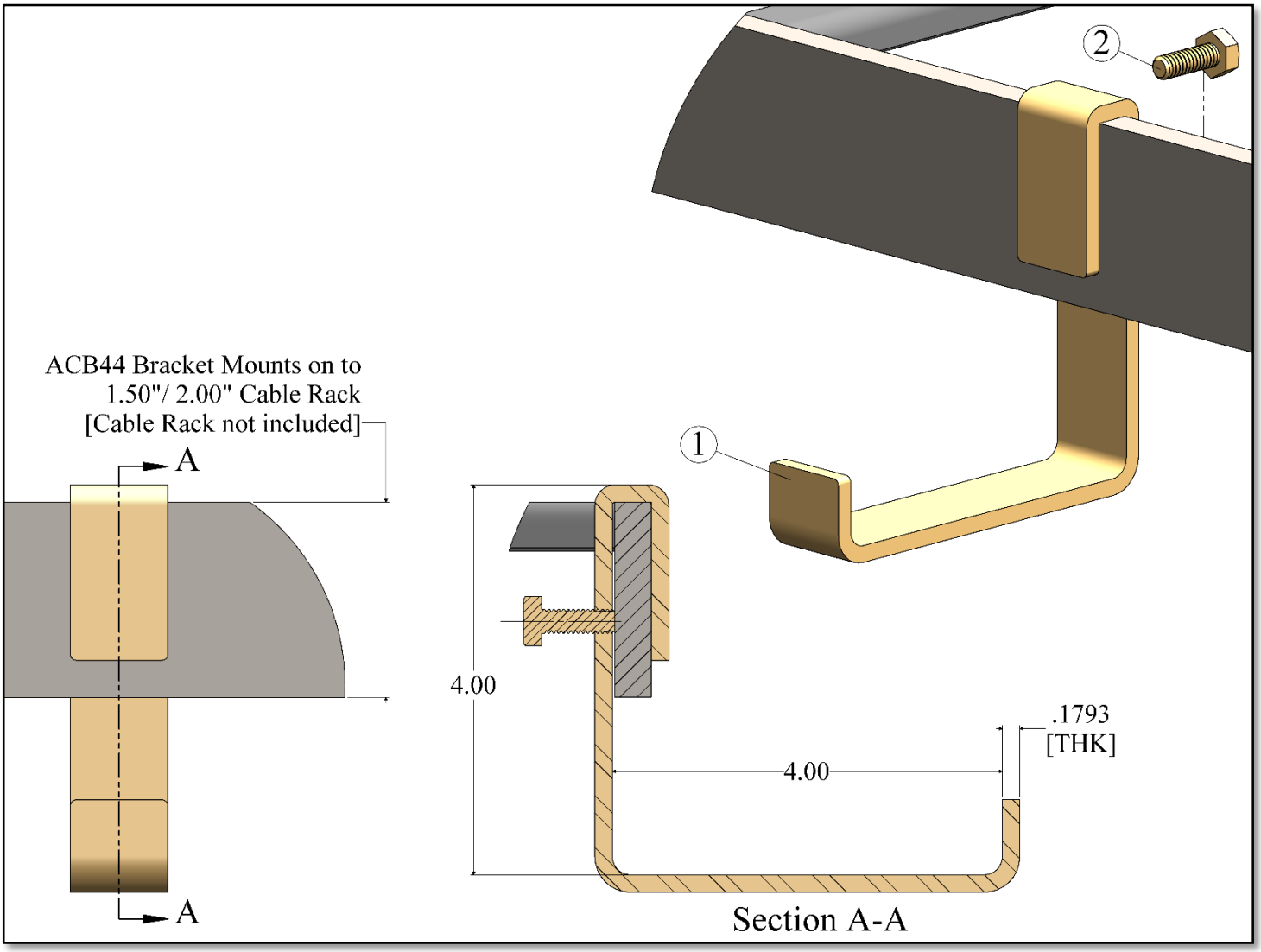

ACB44 - Auxiliary Cable Bracket [Reverse]		
Item#	CSF#	Description
1	ACB44	Auxiliary Cable Bracket [Drop 4.00” x Shelf 4.00”] mounts onto 1.50”/ 2.00” Cable Rack [Reverse]
2	HH0603	1/4-20 x .75” LG - Hex Head Cap Screw

Notes:

- Finish Codes: See Tech Data for Paint Codes
- Also available [DG] Telephone Gray

RVSD*1017

Specifications subject to change. Please contact CSF Customer Service for more information.

© copyright 2004 Central Steel Fabricators, Inc.
http://www.centralsteelfab.com ◆ 2100 Parkes Drive, Broadview, IL 60155
Phone: 708-652-2037 Fax: 708-652-7010

ACB53R - Auxiliary Cable Bracket [Reverse]

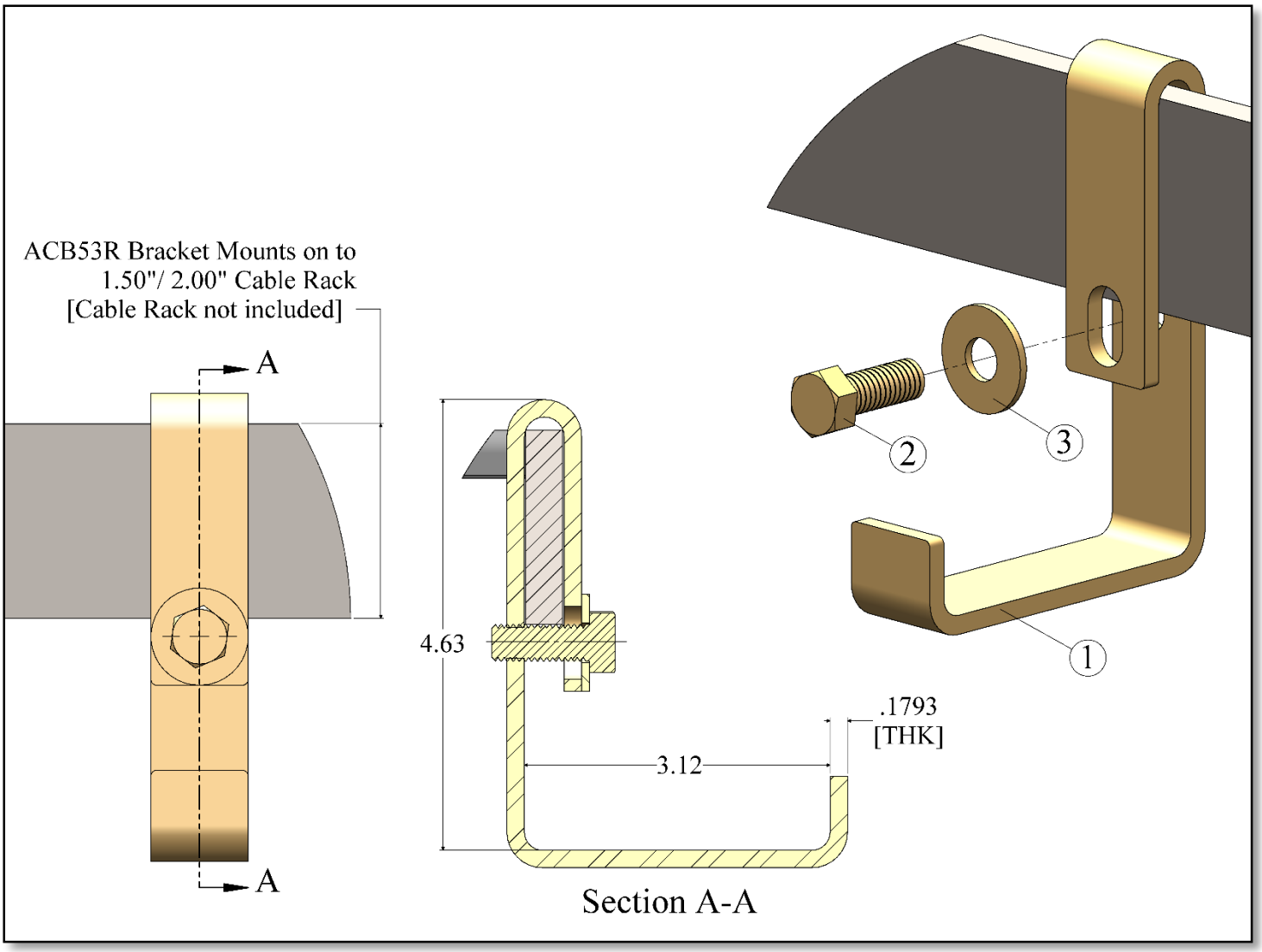

ACB53R - Auxiliary Cable Bracket [Reverse]		
Item#	CSF#	Description
1	ACB53R	Auxiliary Cable Bracket [Drop 4.62” x Shelf 3.12”] mounts onto 1.50”/ 2.00” Cable Rack – [Reverse]
2	HH1005	3/8-16 x 1.00” LG. - Hex Head Cap Screw
3	FW166	3/8” Flat Washer

Notes:

- Finish Codes: See Tech Data for Paint Codes
- Also available [DG] Telephone Gray

RVSD*1017

Specifications subject to change. Please contact CSF Customer Service for more information.

© copyright 2004 Central Steel Fabricators, Inc.
http://www.centralsteelfab.com ◆ 2100 Parkes Drive, Broadview, IL 60155
Phone: 708-652-2037 Fax: 708-652-7010

ACB6 - Auxiliary Cable Bracket

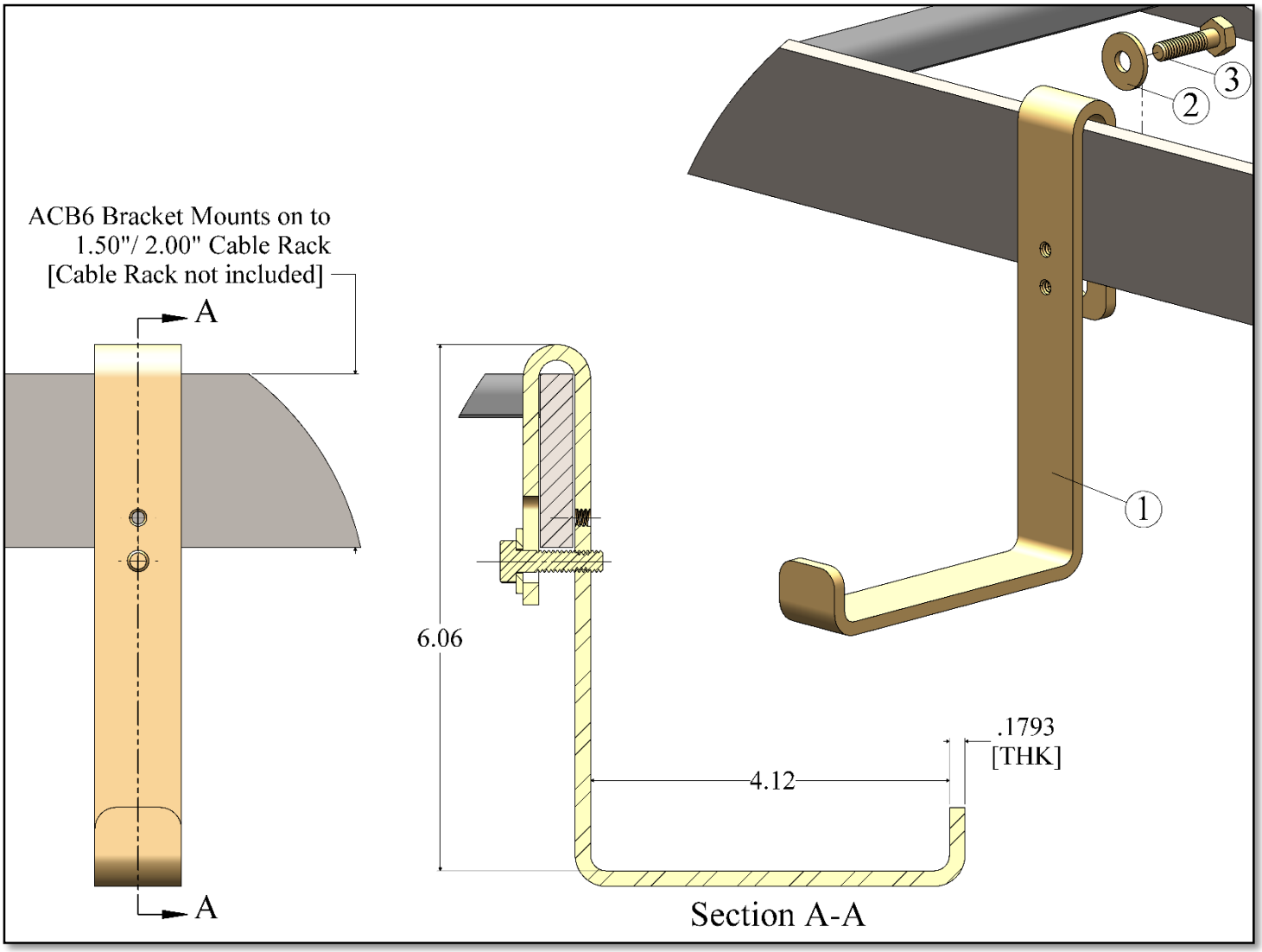

ACB6 - Auxiliary Cable Bracket		
Item#	CSF#	Description
1	ACB6	Auxiliary Cable Bracket [Drop 6.06” x Shelf 4.12”] mounts onto 1.50”/ 2.00” Cable Rack
2	FW164	1/4” Flat Washer
3	HH0605	1/4-20 x 1.00” LG. - Hex Head Cap Screw

Notes:

- Finish Codes: See Tech Data for Paint Codes
- Also available [DG] Telephone Gray

RVSD*1017

Specifications subject to change. Please contact CSF Customer Service for more information.

© copyright 2004 Central Steel Fabricators, Inc.
http://www.centralsteelfab.com ◆ 2100 Parkes Drive, Broadview, IL 60155
Phone: 708-652-2037 Fax: 708-652-7010

ACB6R - Auxiliary Cable Bracket [Reverse]

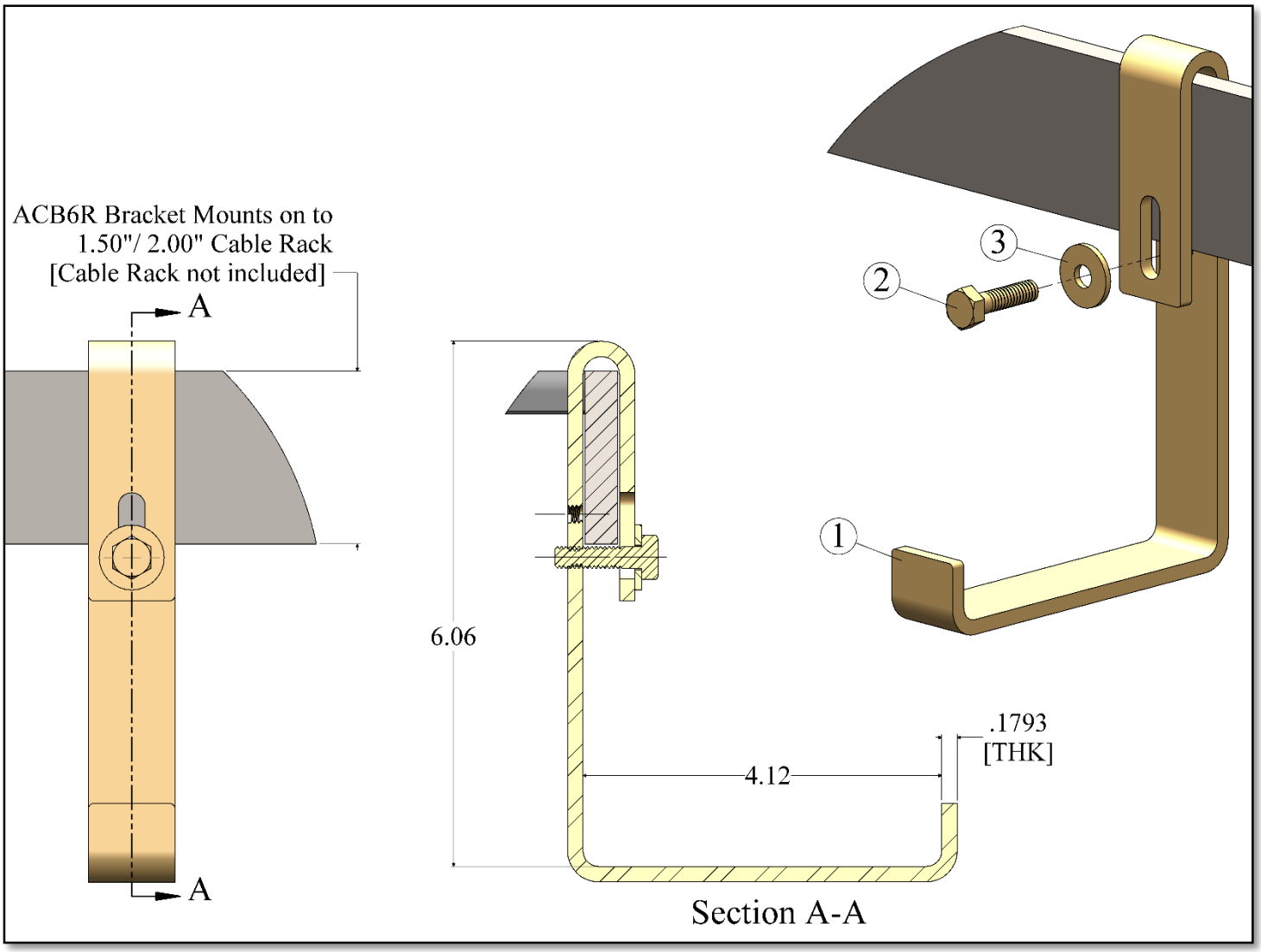

ACB6R - Auxiliary Cable Bracket [Reverse]		
Item#	CSF#	Description
1	ACB6R	Auxiliary Cable Bracket [Drop 6.06” x Shelf 4.12”] mounts onto 1.50”/ 2.00” Cable Rack – [Reverse]
2	HH0605	1/4-20 x 1.00” LG. - Hex Head Cap Screw
3	FW164	1/4” Flat Washer

Notes:

- Finish Codes: See Tech Data for Paint Codes
- Also available [DG] Telephone Gray

RVSD*1017

Specifications subject to change. Please contact CSF Customer Service for more information.

© copyright 2004 Central Steel Fabricators, Inc.
http://www.centralsteelfab.com ◆ 2100 Parkes Drive, Broadview, IL 60155
Phone: 708-652-2037 Fax: 708-652-7010

ACB63 - Auxiliary Cable Bracket

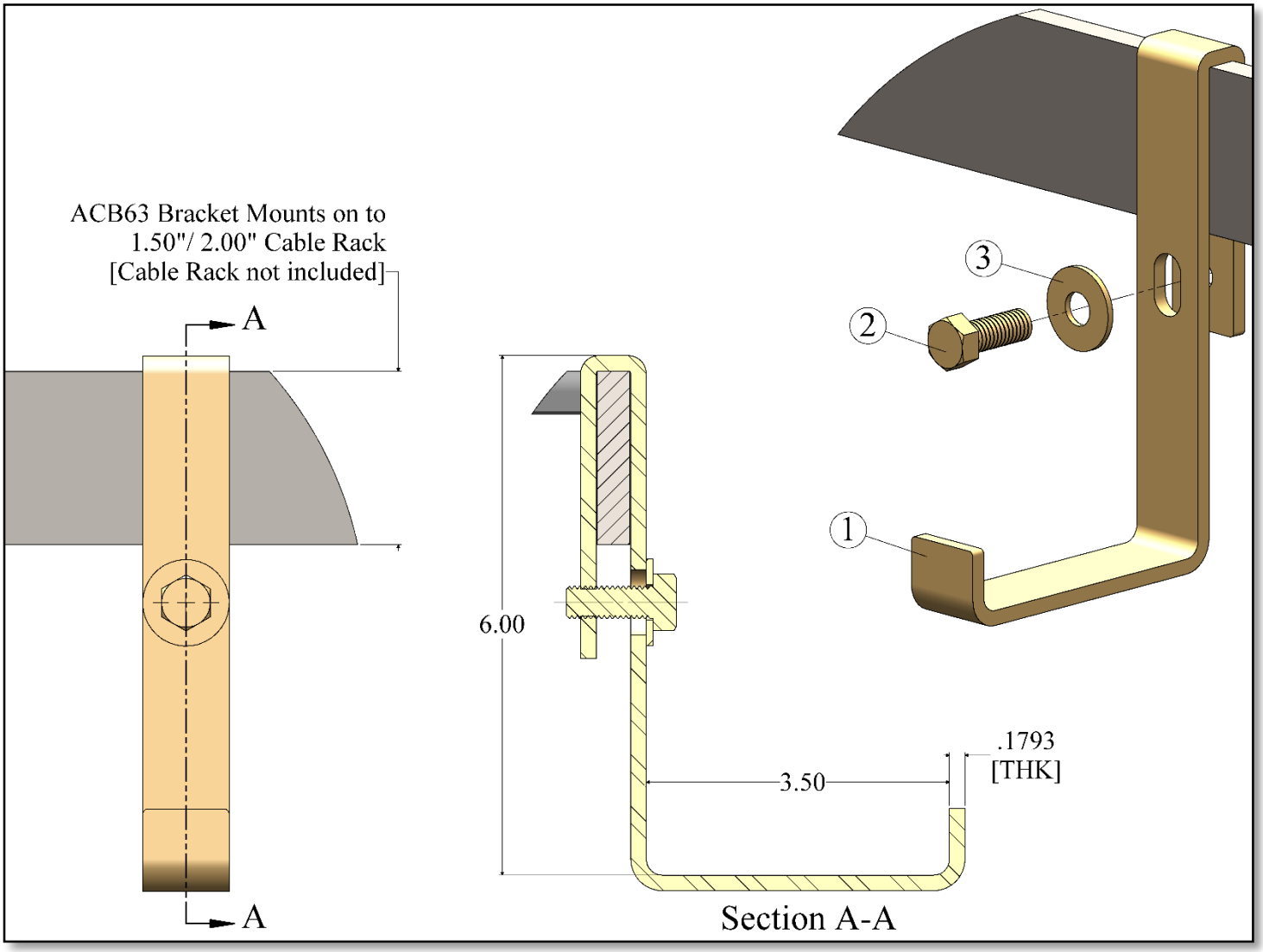

ACB63 - Auxiliary Cable Bracket		
Item#	CSF#	Description
1	ACB63	Auxiliary Cable Bracket [Drop 6.00” x Shelf 3.50”] mounts onto 1.50”/ 2.00” Cable Rack
2	HH1005	3/8-16 x 1.00” LG. - Hex Head Cap Screw
3	FW166	3/8” Flat Washer

Notes:

- Finish Codes: See Tech Data for Paint Codes
- Also available [DG] Telephone Gray

RVSD*1017

Specifications subject to change. Please contact CSF Customer Service for more information.

© copyright 2004 Central Steel Fabricators, Inc.
http://www.centralsteelfab.com ◆ 2100 Parkes Drive, Broadview, IL 60155
Phone: 708-652-2037 Fax: 708-652-7010

ACB63R - Auxiliary Cable Bracket [Reverse]

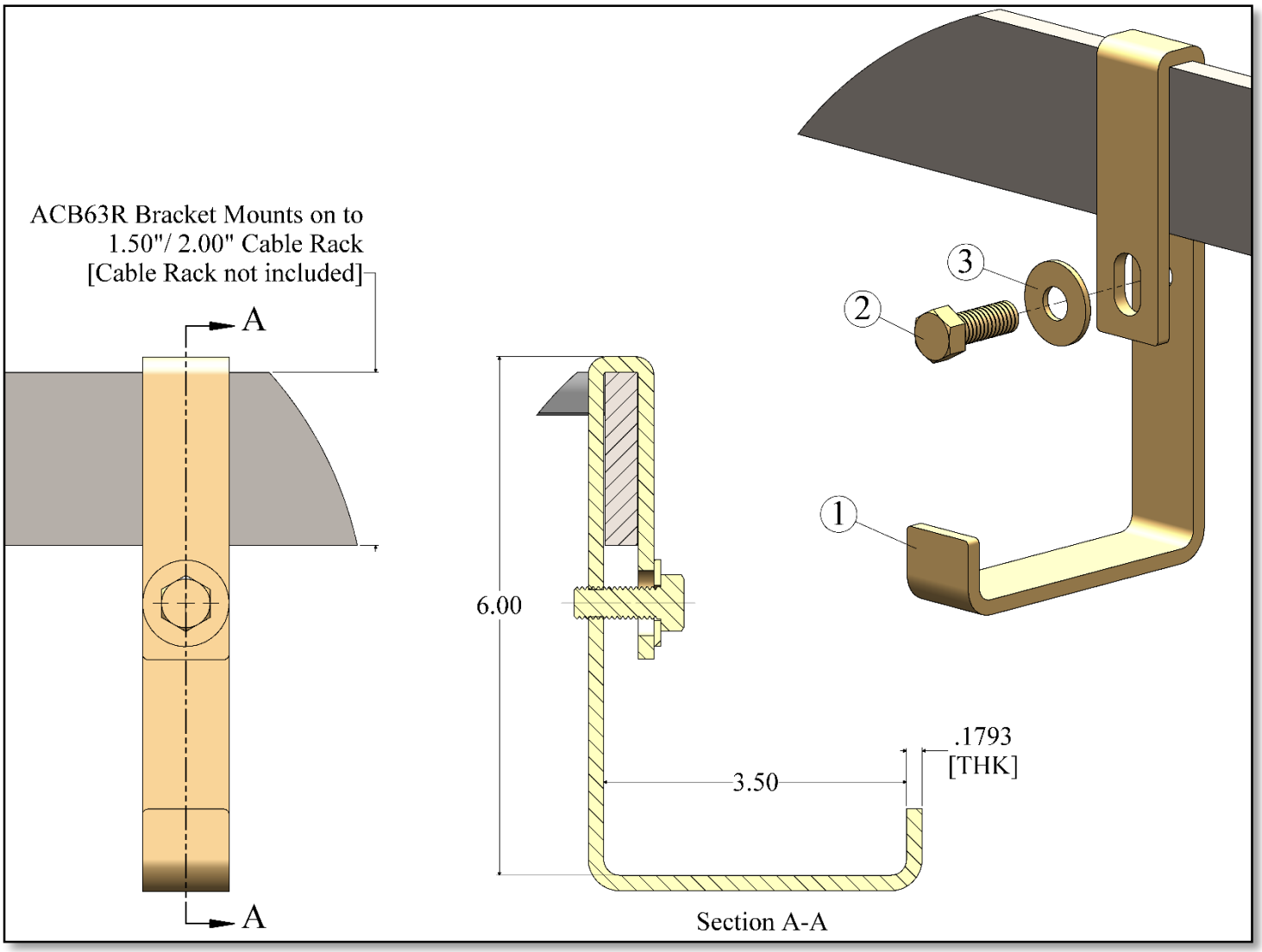

ACB63R - Auxiliary Cable Bracket [Reverse]		
Item#	CSF#	Description
1	ACB63R	Auxiliary Cable Bracket [Drop 6.00” x Shelf 3.50”] mounts onto 1.50”/ 2.00” Cable Rack [Reverse]
2	HH1005	3/8-16 x 1.00” LG. - Hex Head Cap Screw
3	FW166	3/8” Flat Washer

Notes:

- Finish Codes: See Tech Data for Paint Codes
- Also available [DG] Telephone Gray

RVSD*1017

Specifications subject to change. Please contact CSF Customer Service for more information.
© copyright 2004 Central Steel Fabricators, Inc.
http://www.centralsteelfab.com ◆ 2100 Parkes Drive, Broadview, IL 60155
Phone: 708-652-2037 Fax: 708-652-7010

ACB66R - Auxiliary Cable Bracket [Reverse]

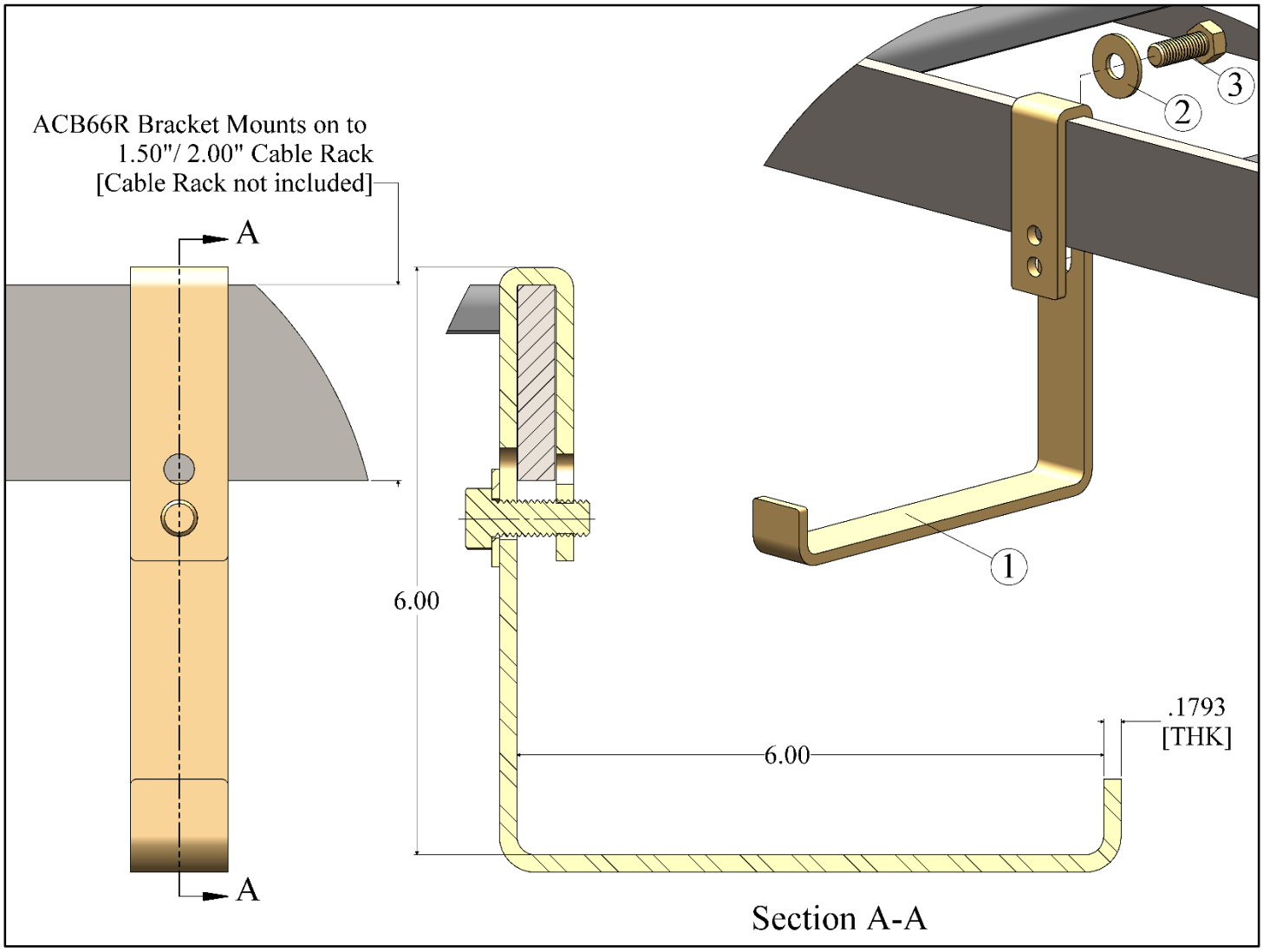

ACB66R - Auxiliary Cable Bracket [Reverse]		
Item#	CSF#	Description
1	ACB66R	Auxiliary Cable Bracket [Drop 6.00” x Shelf 6.00”] mounts onto 1.50”/ 2.00” Cable Rack [Reverse]
2	FW166	3/8” Flat Washer
3	HH1005	3/8-16 x 1.00” LG. - Hex Head Cap Screw

Notes:

- Finish Codes: See Tech Data for Paint Codes
- Also available [DG] Telephone Gray

RVSD*1017

Specifications subject to change. Please contact CSF Customer Service for more information.

© copyright 2004 Central Steel Fabricators, Inc.
http://www.centralsteelfab.com ◆ 2100 Parkes Drive, Broadview, IL 60155
Phone: 708-652-2037 Fax: 708-652-7010

ACB8 - Auxiliary Cable Bracket

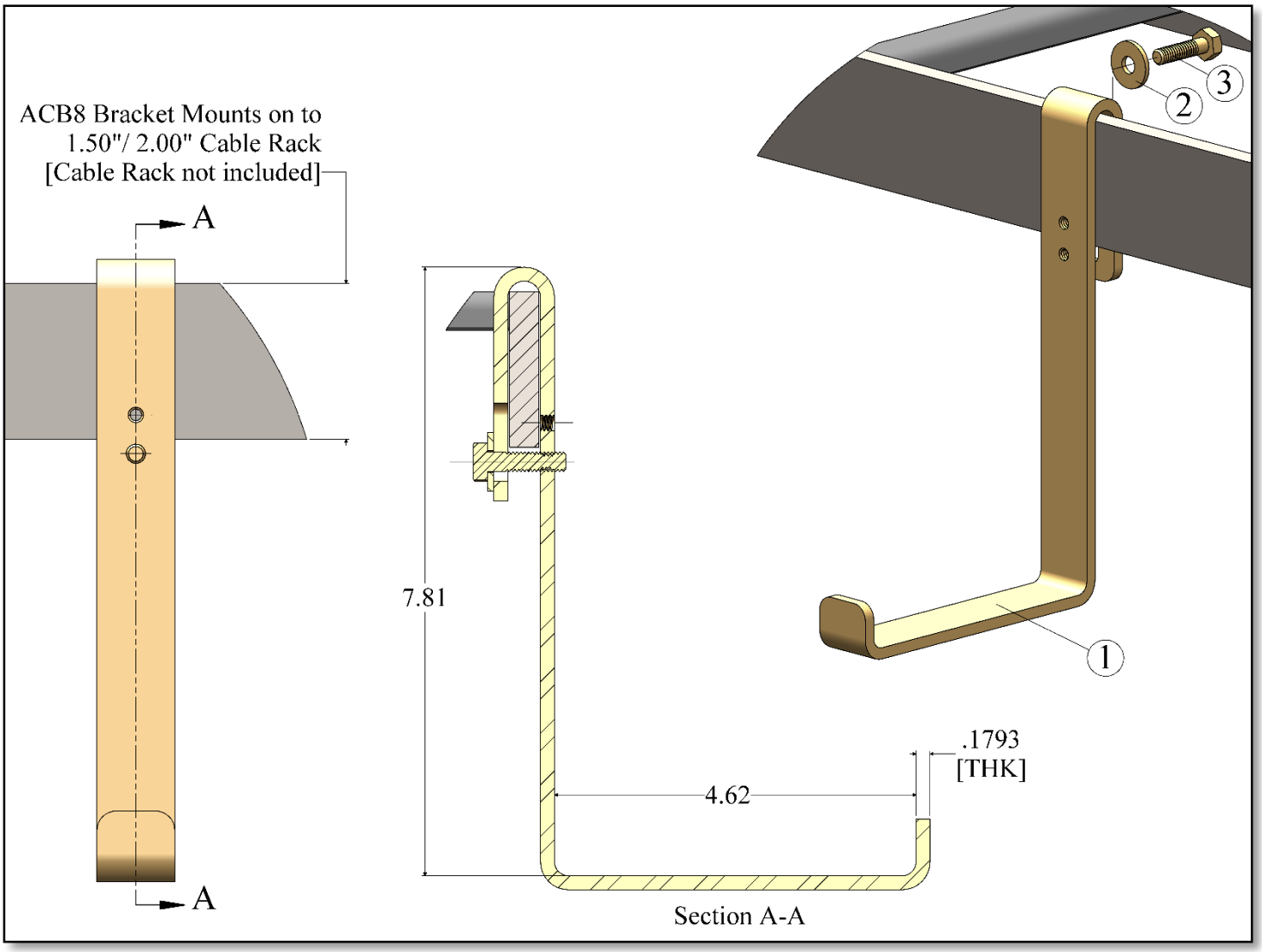

ACB8 - Auxiliary Cable Bracket		
Item#	CSF#	Description
1	ACB8	Auxiliary Cable Bracket [Drop 7.81” x Shelf 4.62”] mounts onto 1.50”/ 2.00” Cable Rack
2	FW164	1/4” Flat Washer
3	HH0605	1/4-20 x 1.00” LG. - Hex Head Cap Screw

Notes:

- Finish Codes: See Tech Data for Paint Codes
- Also available [DG] Telephone Gray

RVSD*1017

Specifications subject to change. Please contact CSF Customer Service for more information.

© copyright 2004 Central Steel Fabricators, Inc.
http://www.centralsteelfab.com ◆ 2100 Parkes Drive, Broadview, IL 60155
Phone: 708-652-2037 Fax: 708-652-7010

ACB9R - Auxiliary Cable Bracket [Reverse]

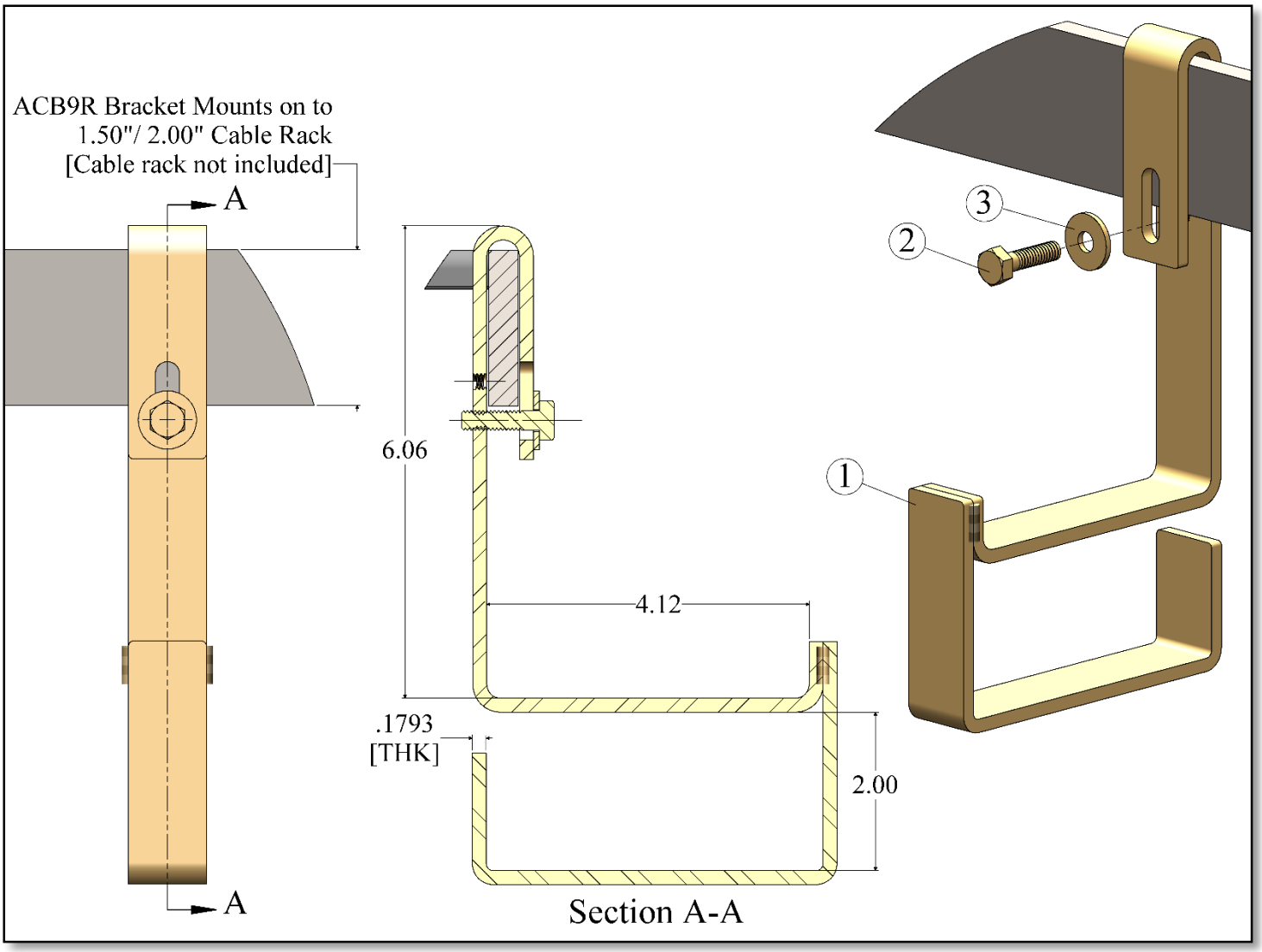

ACB9R - Auxiliary Cable Bracket [Reverse]		
Item#	CSF#	Description
1	ACB9R	Auxiliary Cable Bracket [Drop 6.06” x Shelf 4.12”] mounts onto 1.50”/ 2.00” Cable Rack – [Reverse]
2	HH0605	1/4-20 x 1.00” LG. - Hex Head Cap Screw
3	FW164	1/4” Flat Washer

Notes:

- Finish Codes: See Tech Data for Paint Codes
- Also available [DG] Telephone Gray

RVSD*1017

Specifications subject to change. Please contact CSF Customer Service for more information.

© copyright 2004 Central Steel Fabricators, Inc.
http://www.centralsteelfab.com ◆ 2100 Parkes Drive, Broadview, IL 60155
Phone: 708-652-2037 Fax: 708-652-7010

CMP050 - AUXILIARY CONDUIT MOUNTING KIT

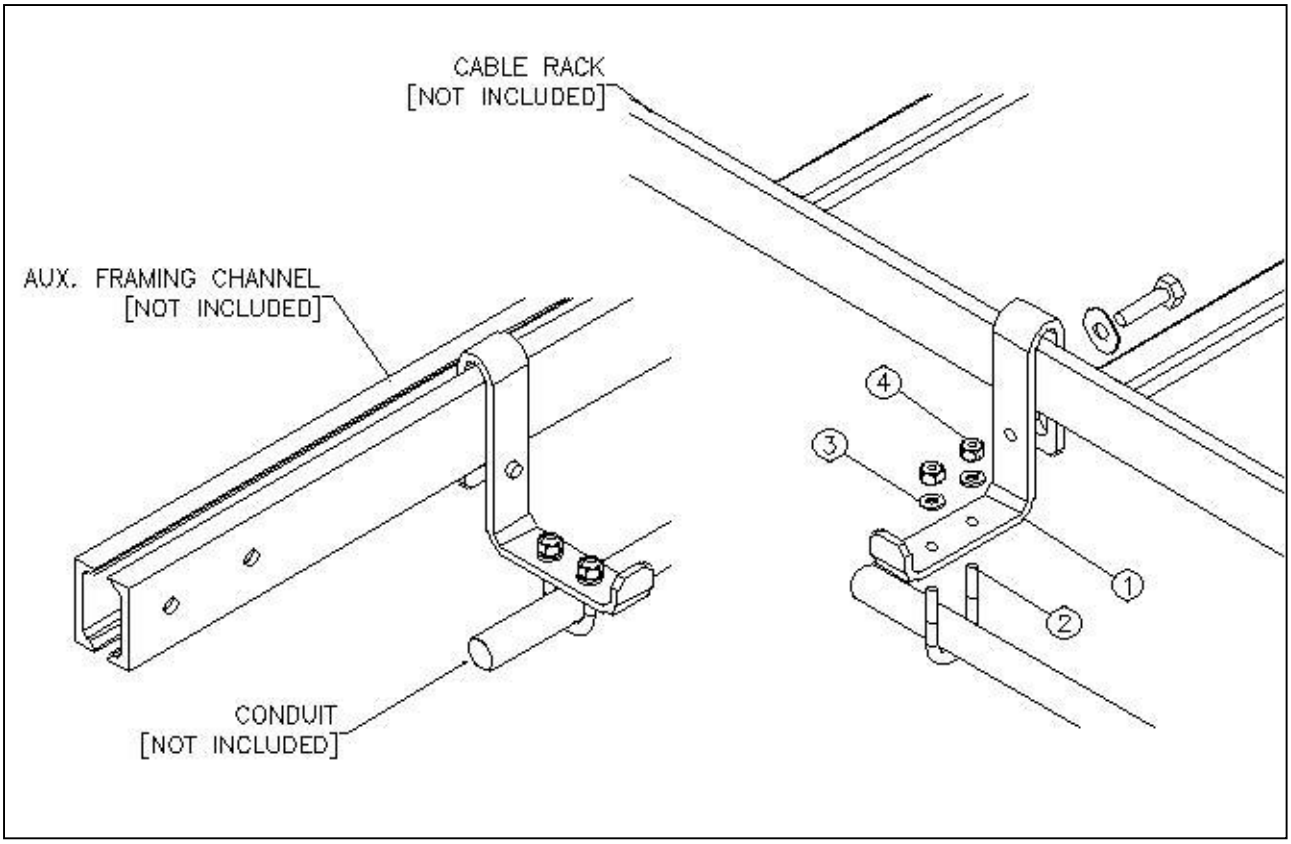

CMP050 – AUX. CONDUIT MOUNTING KIT			
ITEM#	QTY#	CSF P/N#	DESCRIPTION
1	1	ACB4-CMP	AUXILIARY CABLE BRACKET FOR CMP KIT
2	1	UB240	1/4 – 20 U-BOLT 1.75 X [1.12 WIDE]
3	2	LW154	1/4 – 20 SPRING LOCKWASHER
4	2	HN144	1/4 – 20 HEX NUT

NOTES:
-INCLUDES MOUNTING HARDWARE
-FINISHES: ZINC AND YELLOW, SEE TECH DATA FOR PAINT CODES

Specifications subject to change. Please contact CSF Customer Service for more information.
© copyright 2004 Central Steel Fabricators, Inc.
http://www.centralsteelfab.com ◆ 2100 Parkes Drive, Broadview, IL 60155
Phone: 708-652-2037 Fax: 708-652-7010

CC1 – Corner Clamp Kit – [1.50” Cable Rack]

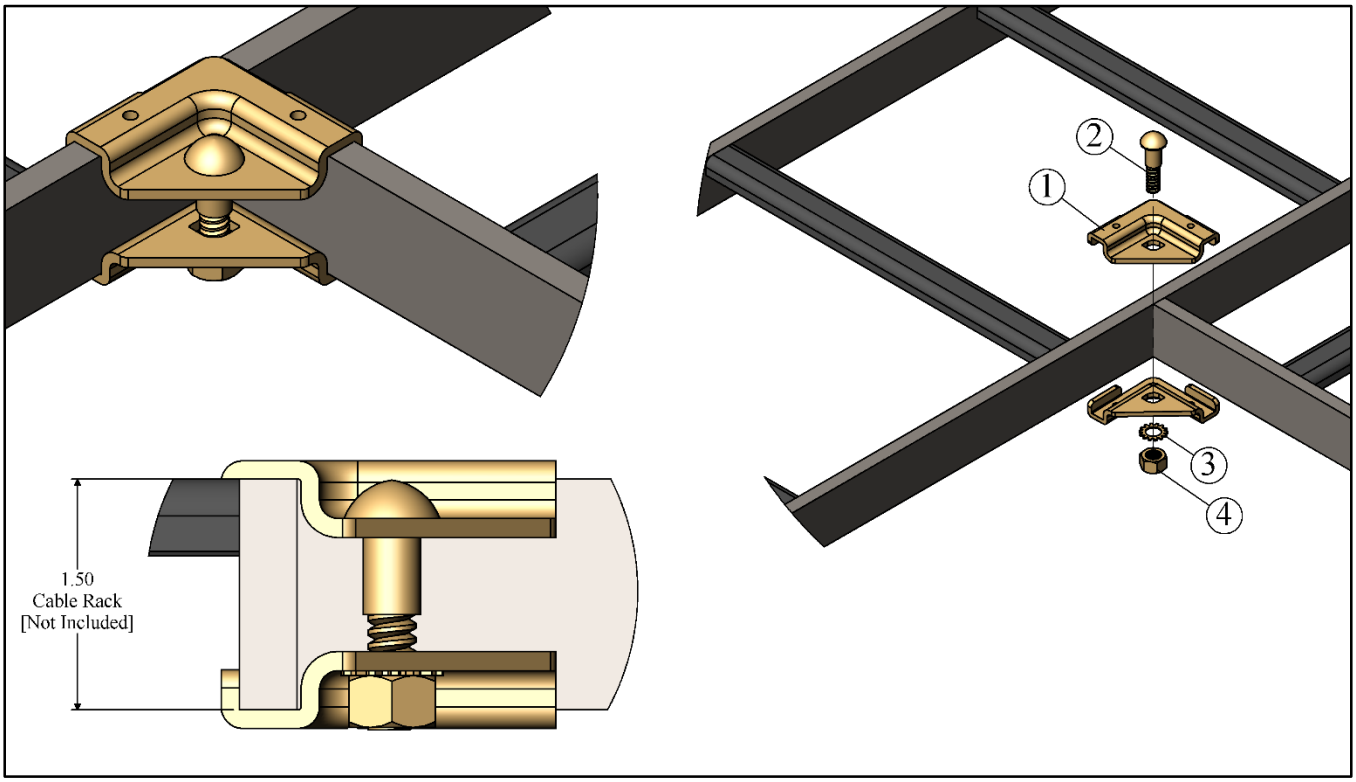

CC1 – Corner Clamp Kit [1.50” Cable Rack]			
Item#	QTY#	CSF P/N#	Description
1	2	CC	Corner Clamp Bracket – ZY
2	1	CB171	3/8-16 Connection Bolt x 1.38” LG. - ZY
3	1	LWE156	3/8” External Tooth Lock Washer – ZY
4	1	HN146	3/8-16 Hex Nut - ZY

Notes :
- Corner Clamps fit Tube/ Bar and Channel Stringer
- Finish Code: Zinc and Yellow
- Cable Rack Not Included in kit.

RVSD*0417

Specifications subject to change. Please contact CSF Customer Service for more information.

© copyright 2004 Central Steel Fabricators, Inc.
http://www.centralsteelfab.com ◆ 2100 Parkes Drive, Broadview, IL 60155
Phone: 708-652-2037 Fax: 708-652-7010

CC12 – Corner Clamp Kit – [1.50” Cable Rack] Pair

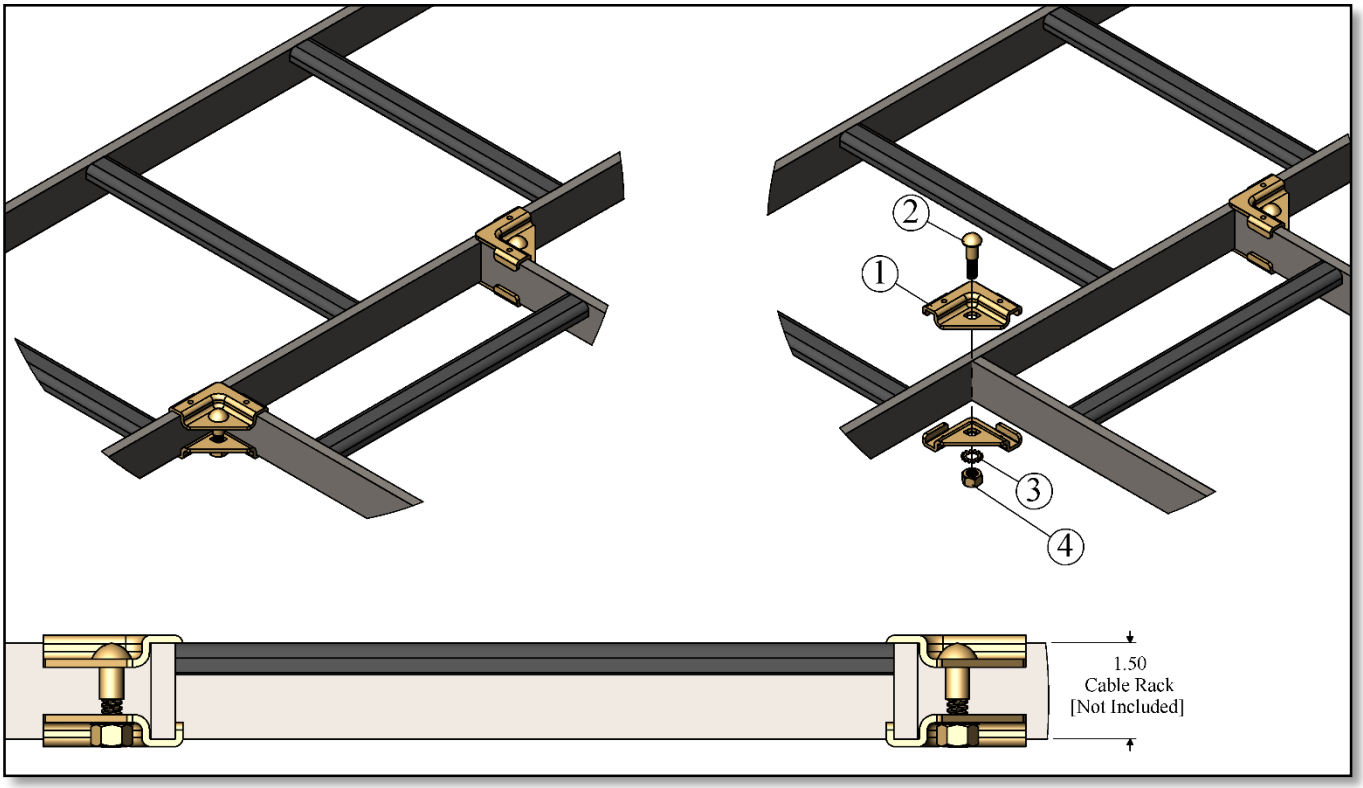

CC12 – Corner Clamp Kit [1.50” Cable Rack] Pair			
Item#	QTY#	CSF P/N#	Description
1	4	CC	Corner Clamp Bracket – ZY
2	2	CB171	3/8-16 Connection Bolt x 1.38” LG. - ZY
3	2	LWE156	3/8” External Tooth Lock Washer – ZY
4	2	HN146	3/8-16 Hex Nut - ZY

Notes :
- Corner Clamps fit Tube/ Bar and Channel Stringer
- Finish Code: Zinc and Yellow
- Cable Rack Not Included in kit.

RVSD*0417

Specifications subject to change. Please contact CSF Customer Service for more information.

© copyright 2004 Central Steel Fabricators, Inc.
http://www.centralsteelfab.com ◆ 2100 Parkes Drive, Broadview, IL 60155
Phone: 708-652-2037 Fax: 708-652-7010

CC2 – Corner Clamp Kit – [2.00” Cable Rack]

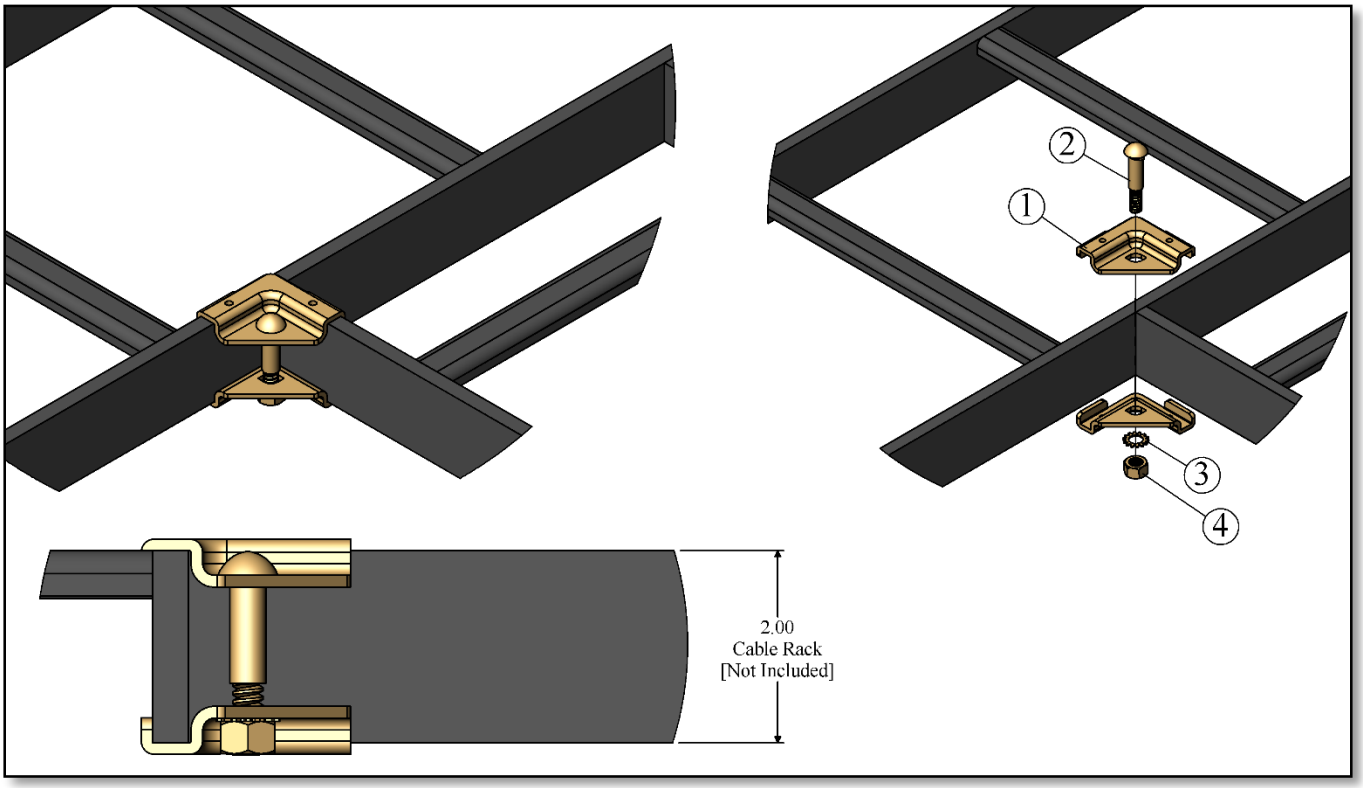

CC2 – Corner Clamp Kit [2.00” Cable Rack]			
Item#	QTY#	CSF P/N#	Description
1	2	CC	Corner Clamp Bracket – ZY
2	1	CB170	3/8-16 Connection Bolt x 1.88” LG. - ZY
3	1	LWE156	3/8” External Tooth Lock Washer – ZY
4	1	HN146	3/8-16 Hex Nut - ZY

Notes :
- Corner Clamps fit Tube/ Bar and Channel Stringer
- Finish Code: Zinc and Yellow
- Cable Rack Not Included in kit.

RVSD*0417

Specifications subject to change. Please contact CSF Customer Service for more information.

© copyright 2004 Central Steel Fabricators, Inc.
http://www.centralsteelfab.com ◆ 2100 Parkes Drive, Broadview, IL 60155
Phone: 708-652-2037 Fax: 708-652-7010

CC22 – Corner Clamp Kit – [2.00” Cable Rack] Pair

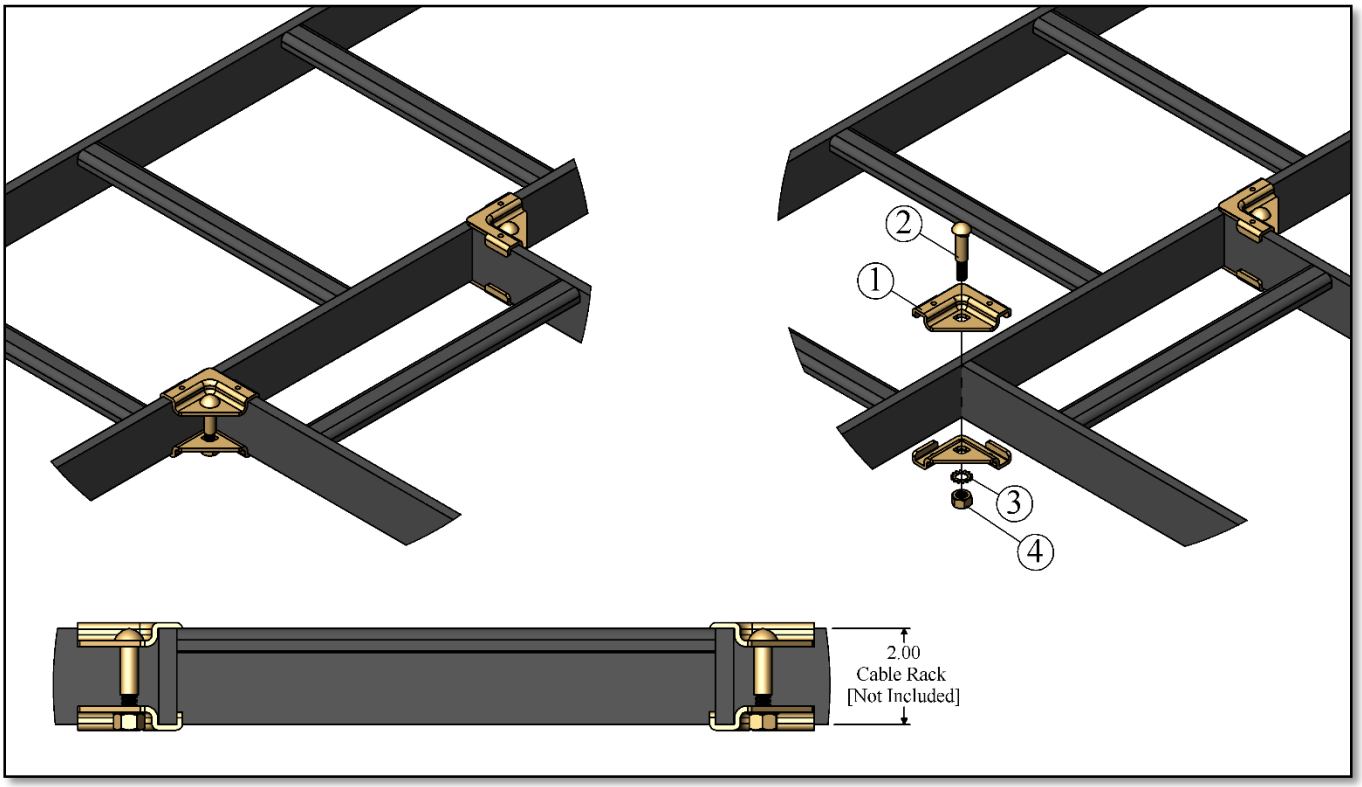

CC22 – Corner Clamp Kit [2.00” Cable Rack] Pair			
Item#	QTY#	CSF P/N#	Description
1	4	CC	Corner Clamp Bracket – ZY
2	2	CB170	3/8-16 Connection Bolt x 1.88” LG. - ZY
3	2	LWE156	3/8” External Tooth Lock Washer – ZY
4	2	HN146	3/8-16 Hex Nut - ZY

Notes :
- Corner Clamps fit Tube/ Bar and Channel Stringer
- Finish Code: Zinc and Yellow
- Cable Rack Not Included in kit.

RVSD*0417

Specifications subject to change. Please contact CSF Customer Service for more information.

© copyright 2004 Central Steel Fabricators, Inc.
http://www.centralsteelfab.com ◆ 2100 Parkes Drive, Broadview, IL 60155
Phone: 708-652-2037 Fax: 708-652-7010

End Closing Bar For 1.50“/ 2.00" Cable Rack

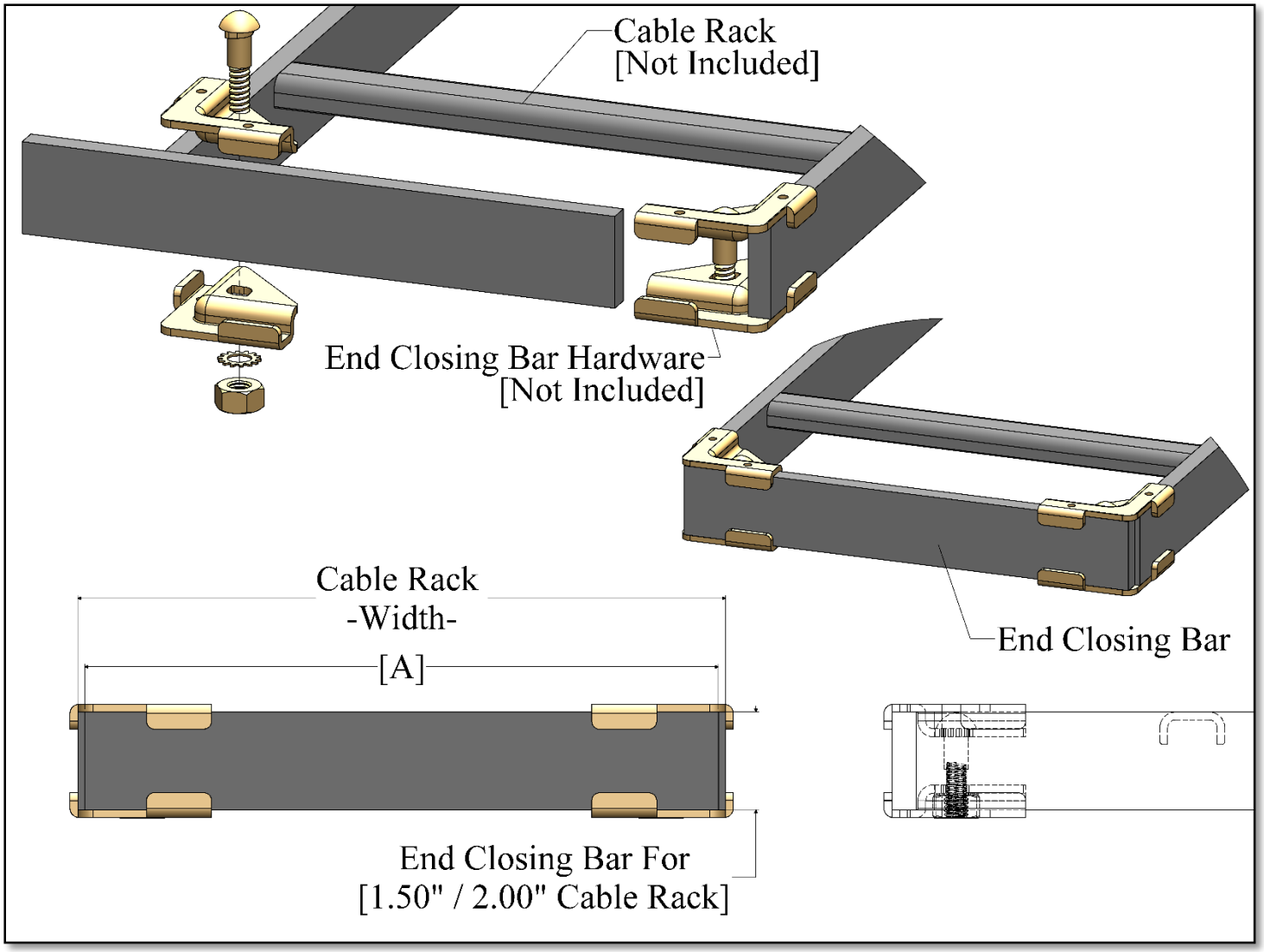

EB1xx – [1.50” End Closing Bar]			EB2xx – [2.00” End Closing Bar]		
CSF P/N#	[A]	Description: 1.50” Cable Rack [Width]	CSF P/N#	[A]	Description: 2.00” Cable Rack [Width]
EB105	4.75”	5.00” x 1.50” Cable Rack Width	EB205	4.75”	5.00” x 2.00” Cable Rack Width
EB106	5.75”	6.00” x 1.50” Cable Rack Width	EB206	5.75”	6.00” x 2.00” Cable Rack Width
EB110	9.75”	10.00” x 1.50” Cable Rack Width	EB210	9.75”	10.00” x 2.00” Cable Rack Width
EB112	11.75”	12.00” x 1.50” Cable Rack Width	EB212	11.75”	12.00” x 2.00” Cable Rack Width
EB115	14.75”	15.00” x 1.50” Cable Rack Width	EB215	14.75”	15.00” x 2.00” Cable Rack Width
EB118	17.75”	18.00” x 1.50” Cable Rack Width	EB218	17.75”	18.00” x 2.00” Cable Rack Width
EB120	19.75”	20.00” x 1.50” Cable Rack Width	EB220	19.75”	20.00” x 2.00” Cable Rack Width
EB124	23.75”	24.00” x 1.50” Cable Rack Width	EB224	23.75”	24.00” x 2.00” Cable Rack Width
EB125	24.75”	25.00” x 1.50” Cable Rack Width	EB225	24.75”	25.00” x 2.00” Cable Rack Width
EB130	29.75”	30.00” x 1.50” Cable Rack Width	EB230	29.75”	30.00” x 2.00” Cable Rack Width

© copyright 2004 Central Steel Fabricators, Inc.
http://www.centralsteelfab.com ◆ 2100 Parkes Drive, Broadview, IL 60155
Phone: 708-652-2037 Fax: 708-652-7010

END CLOSING TUBE FOR 1.50” CABLE RACK

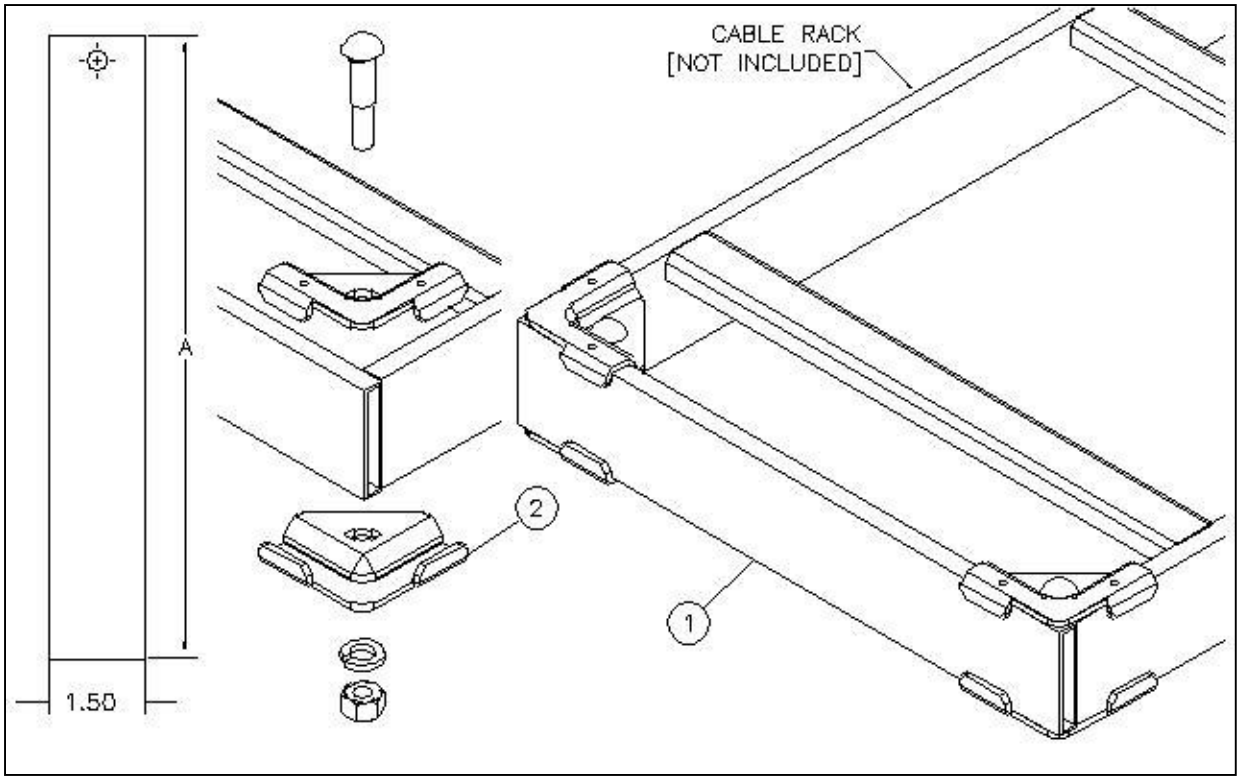

ET1XXK01 – END TUBE KIT W/ CC12			
ITEM#	QTY#	CSF P/N#	DESCRIPTION
1	1	ET1XX	E/C TUBE FOR 1.50” STRINGER
2	1	CC12	CORNER CLAMP KIT 1.50” STRINGER

1 1/2" END BAR ONLY		
CSF#	"A"	CABLE RACK WIDTH
ET105	5.00"	5.00"
ET106	6.00"	6.00"
ET112	12.00"	12.00"
ET115	15.00"	15.00"
ET118	18.00"	18.00"
ET120	20.00"	20.00"
ET124	24.00"	24.00"
ET130	30.00"	30.00"

NOTES:
- FOR ET1XX ADD "KO1" FOR KIT, I.E. EB110K01
- FINISH: ZINC AND YELLOW

RVSD*0511

Specifications subject to change. Please contact CSF Customer Service for more information.

© copyright 2004 Central Steel Fabricators, Inc.
http://www.centralsteelfab.com ◆ 2100 Parkes Drive, Broadview, IL 60155
Phone: 708-652-2037 Fax: 708-652-7010

JBA38xx Series – "J" Bolt Assembly w/ Plate [Auxiliary Framing Channel to Cable Rack]

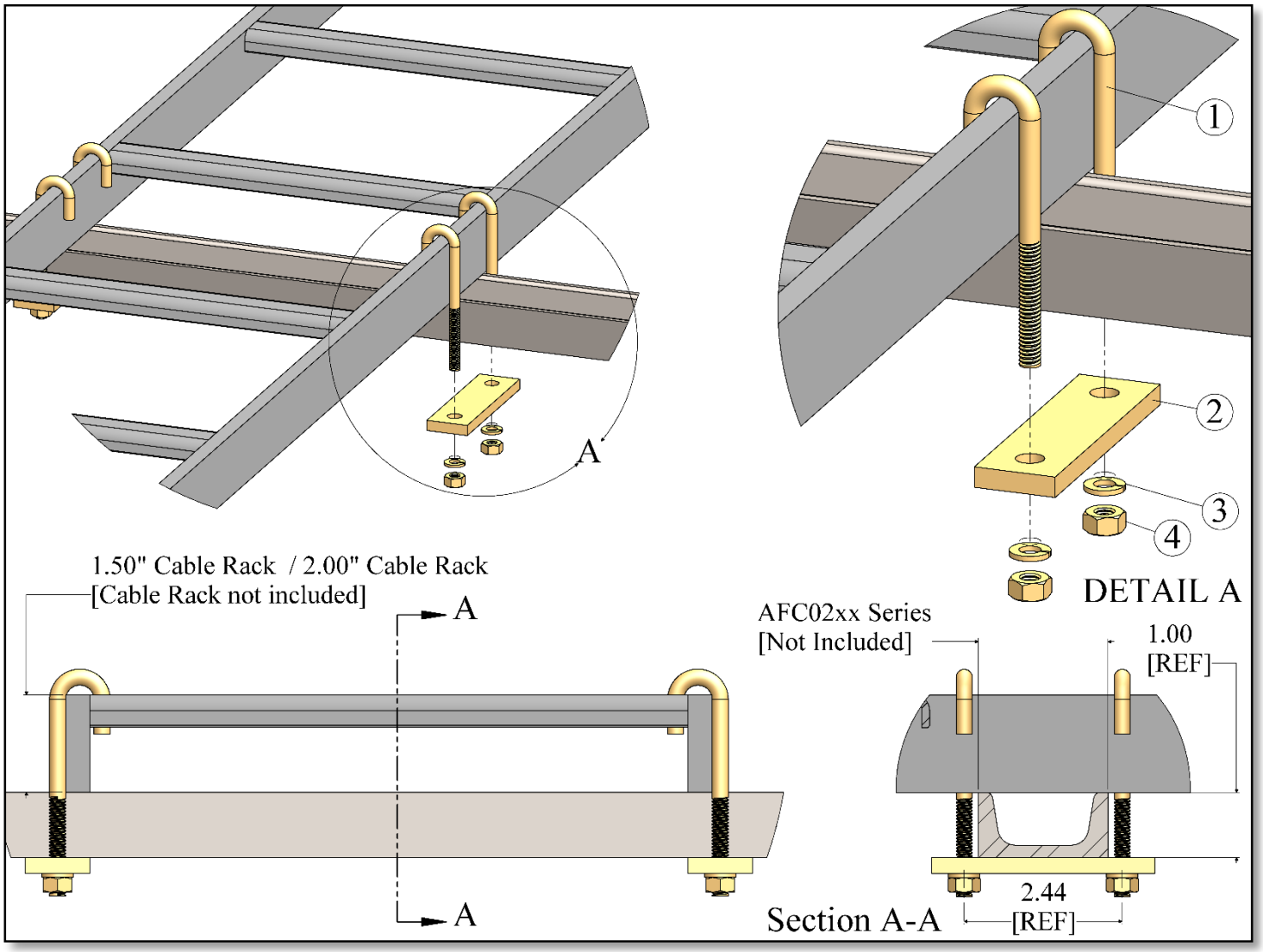

JBA3801 – "J" Bolt Assembly w/ Plate [Auxiliary Framing Channel to 1.50" Cable Rack]			
ITEM#	CSF#	QTY	Description
1	JB242	4	1/4-20 - "J" Bolt
2	THP281	2	Two Hole Plate
3	LW154	4	1/4" Spring Lock Washer
4	HN144	4	1/4-20 – Hex Nut

JBA3802 – "J" Bolt Assembly w/ Plate [Auxiliary Framing Channel to 2.00" Cable Rack]			
ITEM#	CSF#	QTY	Description
1	JB248	4	5/16-18 - "J" Bolt
2	THP281	2	Two Hole Plate
3	LW155	4	5/16" Spring Lock Washer
4	HN145	4	5/16-18 – Hex Nut

© copyright 2004 Central Steel Fabricators, Inc.

http://www.centralsteelfab.com ◆ 2100 Parkes Drive, Broadview, IL 60155
Phone: 708-652-2037 Fax: 708-652-7010

JBA390X J-BOLT ASSEMBLY

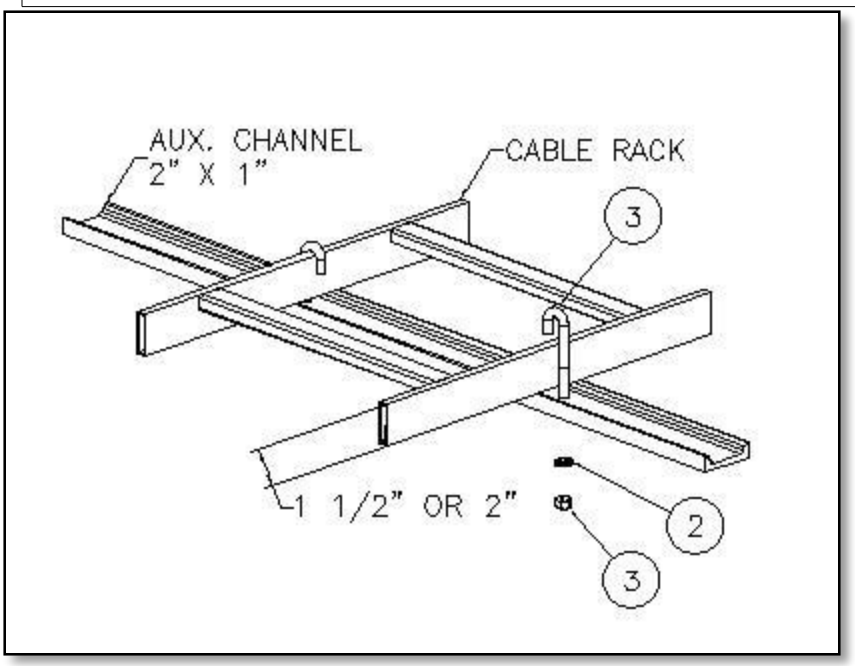

JBA3902-JBA3903			
ITEM #	CSF#	JBA3902 1.50" STRINGER	JBA3903 2.00" STRINGER
1	JB246	4	0
	JB248	0	4
2	LW155	4	4
3	HN145	4	4

NOTES:
- CABLE RACK AND AUX. FRAMING NOT INCLUDED
- FINISH: ZINC AND YELLOW

Specifications subject to change. Please contact CSF Customer Service for more information.
© copyright 2004 Central Steel Fabricators, Inc.
http://www.centralsteelfab.com ◆ 2100 Parkes Drive, Broadview, IL 60155
Phone: 708-652-2037 Fax: 708-652-7010

SCE825 SEISMIC CABLE RACK SPLICE 1.50” AND 2.00” STRINGER

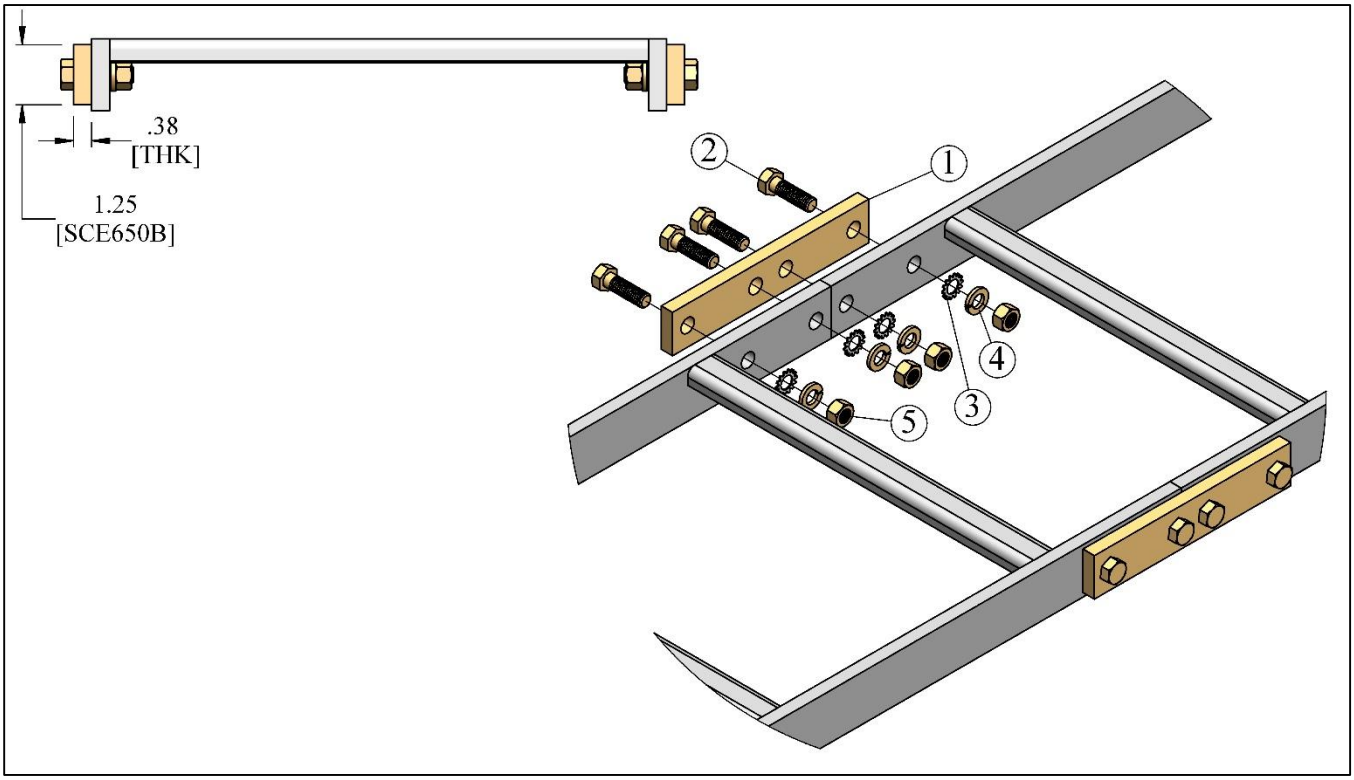

SCE825 – SEISMIC CABLE RACK SPLICE – 1.50” AND 2.00” STRINGER			
ITEM#	QTY	CSF#	DESCRIPTION
1	2	SCE650B	SPLICE BAR - 1.25” X 6.25”
2	8	HH1006	3/8-16 HHCS X 1.25” LG. – ZY
3	8	LWE156	3/8” EXTERNAL TOOTH LOCKWASHER – ZY
4	8	LW156	3/8” SPRING LOCKWASHER - ZY
5	8	HN146	3/8-16 HEX NUT – ZY

NOTES:
- SPLICE REQUIRES HOLES DRILLED IN CABLE RACK
- FINISH: ZINC AND YELLOW

RVSD*1215

Specifications subject to change. Please contact CSF Customer Service for more information.

© copyright 2004 Central Steel Fabricators, Inc.
http://www.centralsteelfab.com ◆ 2100 Parkes Drive, Broadview, IL 60155
Phone: 708-652-2037 Fax: 708-652-7010

SCE825K01 - SEISMIC CABLE RACK JUNCTION KIT

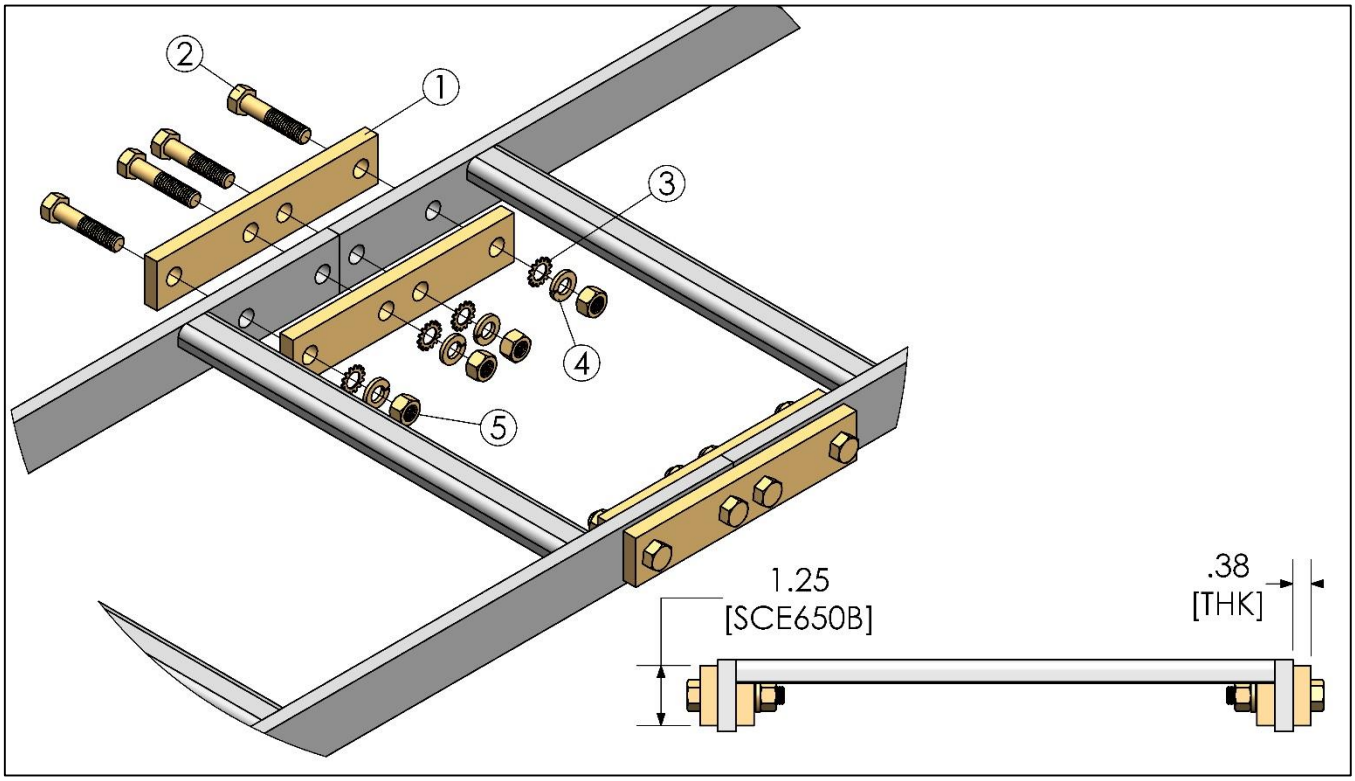

SCE825K01 – SEISMIC CABLE RACK JUNCTION KIT - 1.50” AND 2.00” STRINGER			
ITEM#	QTY	CSF#	DESCRIPTION
1	4	SCE650B	SPLICE BAR - 1.25” X 6.25”
2	8	HH1008	3/8-16 HHCS X 1.75” LG. – ZY
3	8	LWE156	3/8” EXTERNAL TOOTH LOCKWASHER – ZY
4	8	LW156	3/8” SPRING LOCKWASHER - ZY
5	8	HN146	3/8-16 HEX NUT – ZY

NOTES:
- SPLICE REQUIRES HOLES DRILLED IN CABLE RACK
- FINISH: ZINC AND YELLOW

RVSD*1215

Specifications subject to change. Please contact CSF Customer Service for more information.

© copyright 2004 Central Steel Fabricators, Inc.
http://www.centralsteelfab.com ◆ 2100 Parkes Drive, Broadview, IL 60155
Phone: 708-652-2037 Fax: 708-652-7010

HRN Series - Bar Horn Kits

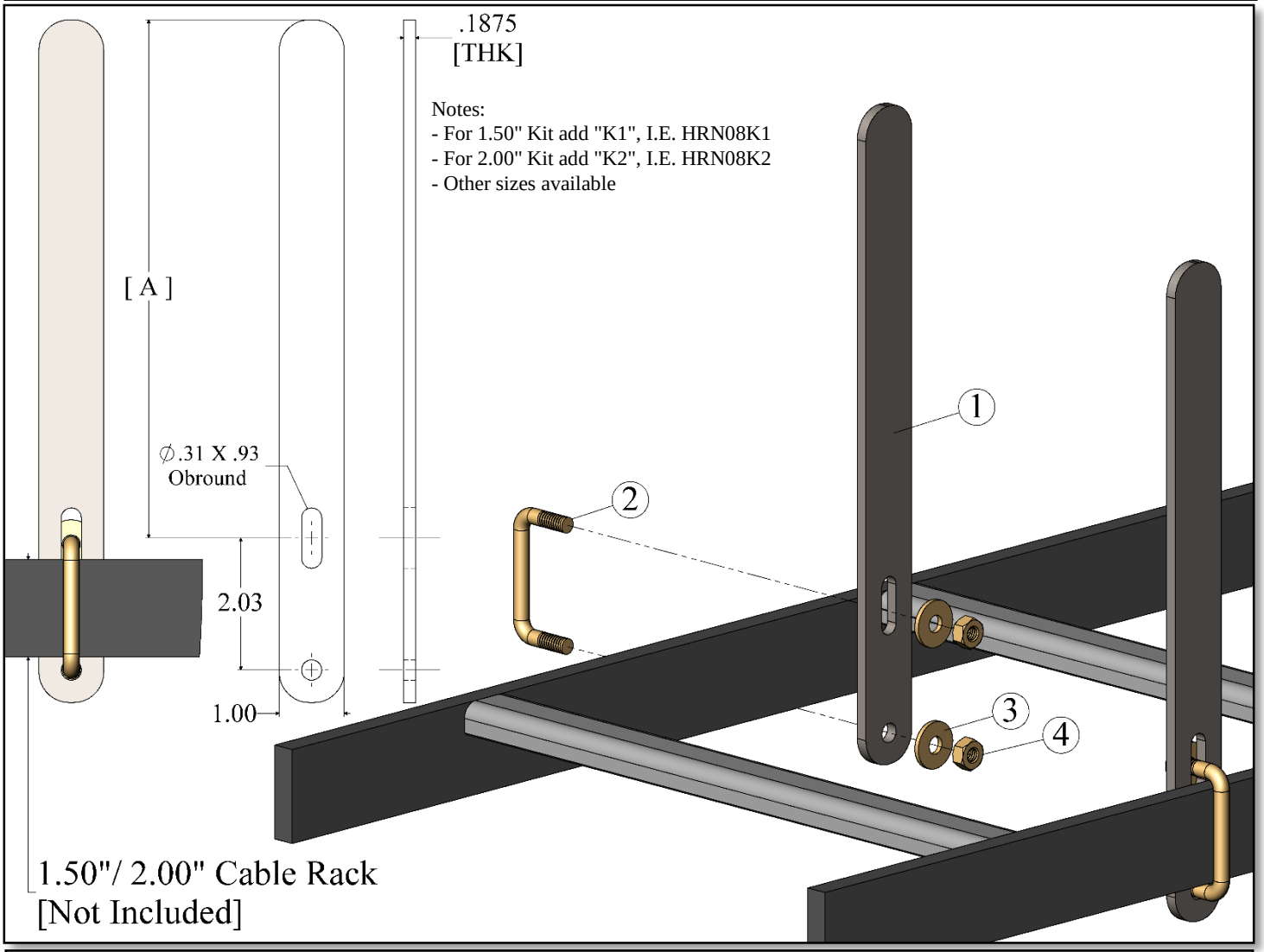

HRN Series		
CSF P/N#	[A]	Description
HRN04xx	4.00"	Bar Type Horn 1.00” x 6.47” Length
HRN08xx	8.00"	Bar Type Horn 1.00” x 10.47” Length

1.50" Cable Rack Stringer Kit – “K1”			
ITEM#	CSF P/N#	Description	QTY
1	HRNxx	Bar Type Horn	1
2	UBS141	U-Bolt Square x 1/4-20 Thread	1
3	FW164	1/4” Flat Washer	2
4	HN144	1/4-20 Hex Nut	2

2.00" Cable Rack Stringer Kit – “K2”			
Item#	CSF P/N#	Description	QTY
1	HRNxx	Bar Type Horn	1
2	UBS142	U-Bolt Square x 1/4-20 Thread - ZY	1
3	FW164	1/4” Flat washer - ZY	2
4	HN144	1/4-20 Hex Nut - ZY	2

Wire Horn – Series

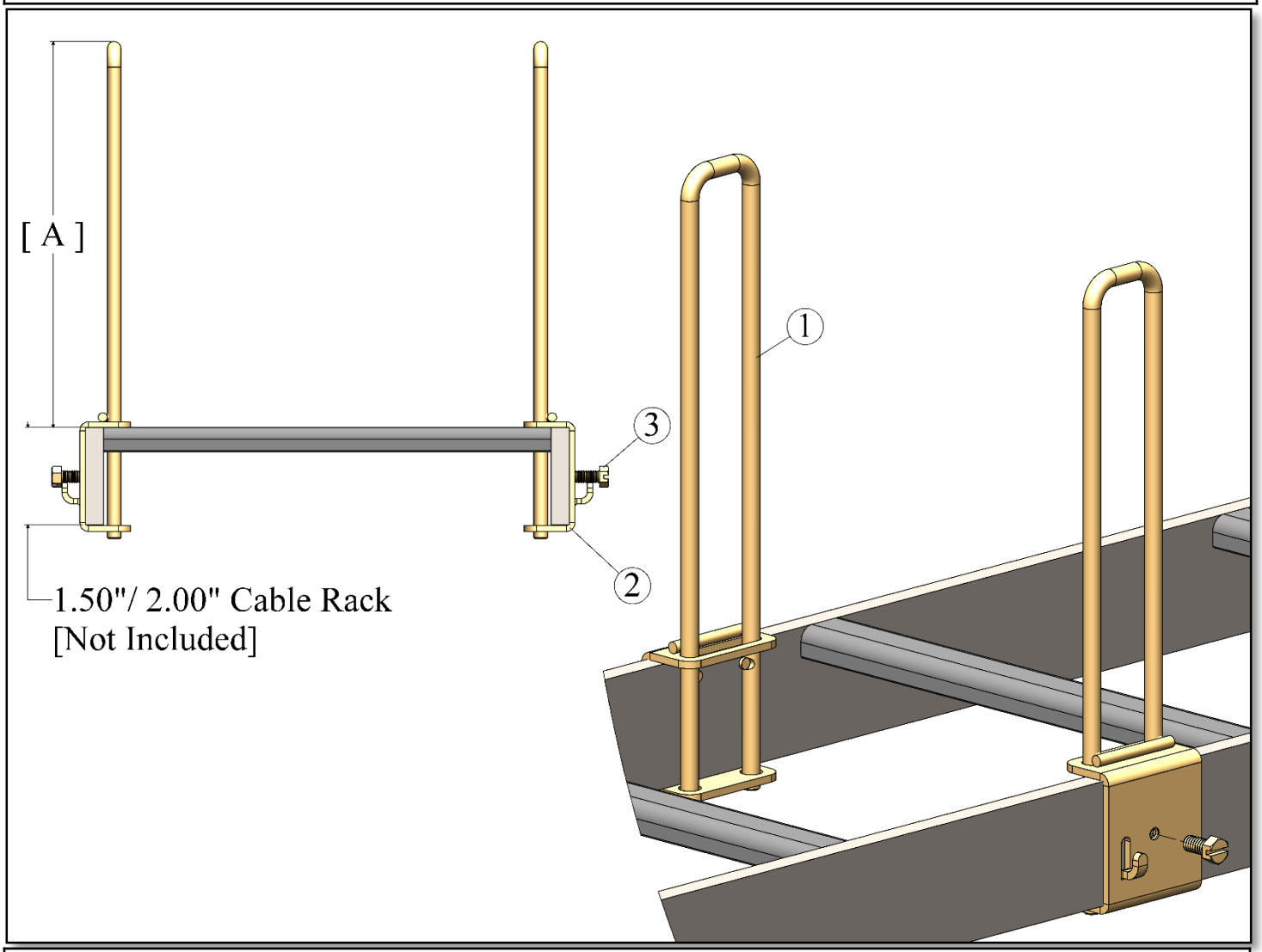

1.50" Cable Rack Stringer Kit – [K1/ K113]				
CSF P/N#	[A]	Item#1 - WHxx – Wire Horn [QTY]	Item# 2 - WHB15 - Wire Horn Bracket - [QTY]	Item#3 – HH0601s – 1/4-20 Hex Head Machine Screw x 1/2" LG. – Slotted [QTY]
WH04K1	4.00"	1	1	1
WH04K113	4.00"	13	13	13
WH08K1	8.00"	1	1	1
WH08K113	8.00"	13	13	13
WH12K1	12.00"	1	1	1
WH12K113	12.00"	13	13	13
WH14K1	14.00"	1	1	12
WH14K113	14.00"	13	13	13

2.00" Cable Rack Stringer Kit – [K2/ K213]				
CSF P/N#	[A]	Item#1 - WHxx – Wire Horn [QTY]	Item# 2 – WHB20 - Wire Horn Bracket - [QTY]	Item#3 – HH0601s – 1/4-20 Hex Head Machine Screw x 1/2" LG. – Slotted [QTY]
WH04K2	4.00"	1	1	1
WH04K213	4.00"	13	13	13
WH08K2	8.00"	1	1	1
WH08K213	8.00"	13	13	13
WH12K2	12.00"	1	1	1
WH12K213	12.00"	13	13	13
WH14K2	14.00"	1	1	12
WH14K213	14.00"	13	13	13

WHxxBK – Offset Wire Horn Series

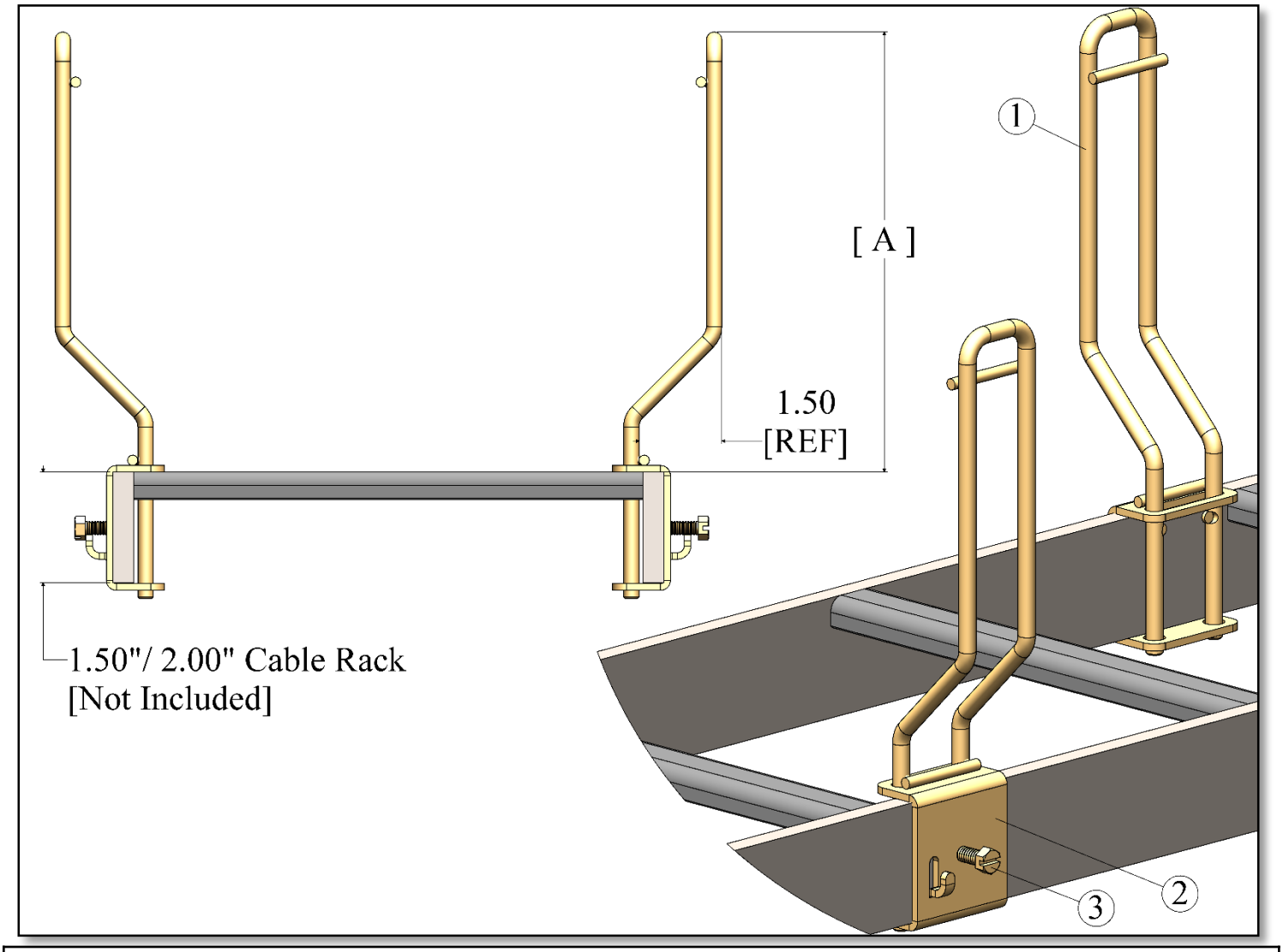

1.50" Cable Rack Stringer Kit – [K1/ K113]				
CSF P/N#	[A]	Item#1 - WHxxB – Wire Horn [QTY]	Item# 2 - WHB15 - Wire Horn Bracket - [QTY]	Item#3 – HH0601s – 1/4-20 Hex Head Machine Screw x 1/2" LG. – Slotted [QTY]
WH08BK1	8.00"	1	1	1
WH08BK113	8.00"	13	13	13
WH12BK1	12.00"	1	1	1
WH12BK113	12.00"	13	13	13

2.00" Cable Rack Stringer Kit – [K2/ K213]				
CSF P/N#	[A]	Item#1 - WHxxB – Wire Horn [QTY]	Item# 2 – WHB20 - Wire Horn Bracket - [QTY]	Item#3 – HH0601s – 1/4-20 Hex Head Machine Screw x 1/2" LG. – Slotted [QTY]
WH08BK2	8.00"	1	1	1
WH08BK213	8.00"	13	13	13
WH12BK2	12.00"	1	1	1
WH12BK213	12.00"	13	13	13

Finish Code: Zinc and Yellow

Specifications subject to change. Please contact CSF Customer Service for more information. RVSD*1217

© copyright 2004 Central Steel Fabricators, Inc.
http://www.centralsteelfab.com ◆ 2100 Parkes Drive, Broadview, IL 60155
Phone: 708-652-2037 Fax: 708-652-7010

WH08CKxx – Compartment Wire Horn Kits

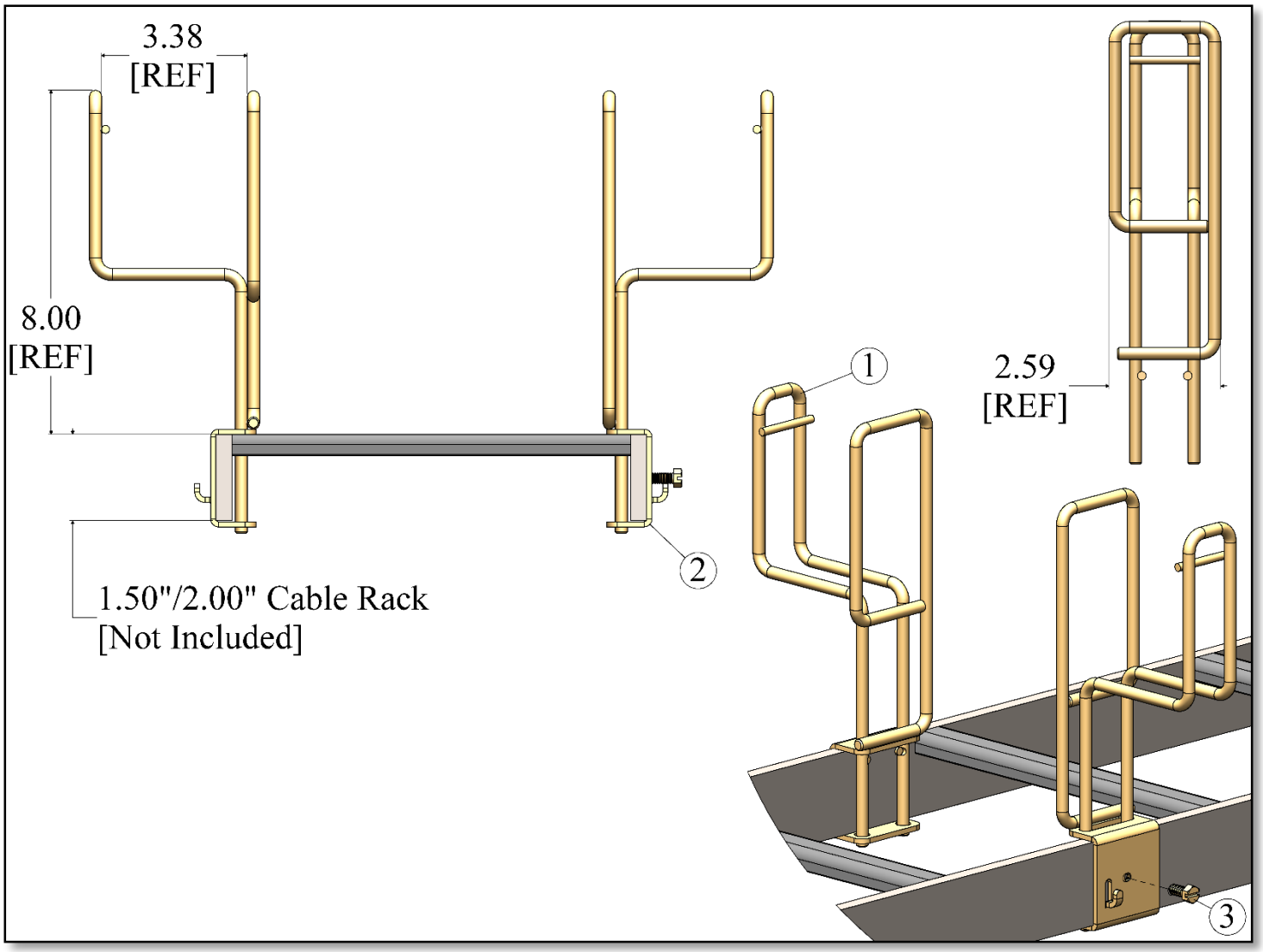

1.50" Cable Rack Stringer Kit – [K1/ K113]				
CSF P/N#	Height	Item#1 – WH08C – Wire Horn [QTY]	Item# 2 – WHB15 - Wire Horn Bracket - [QTY]	Item#3 – HH0601s – 1/4-20 Hex Head Machine Screw x 1/2" LG. – Slotted [QTY]
WH08CK1	8.00"	1	1	1
WH08CK113	8.00"	13	13	13

2.00" Cable Rack Stringer Kit – [K2/ K213]				
CSF P/N#	Height	Item#1 – WH08C – Wire Horn [QTY]	Item# 2 – WHB20 - Wire Horn Bracket - [QTY]	Item#3 – HH0601s – 1/4-20 Hex Head Machine Screw x 1/2" LG. – Slotted [QTY]
WH08CK2	8.00"	1	1	1
WH08CK213	8.00"	13	13	13

- Finish Code: Zinc and Yellow

RVSD*1217

Specifications subject to change. Please contact CSF Customer Service for more information.

© copyright 2004 Central Steel Fabricators, Inc.
http://www.centralsteelfab.com ◆ 2100 Parkes Drive, Broadview, IL 60155
Phone: 708-652-2037 Fax: 708-652-7010

8.00” WIRE HORN DIVIDER KIT ZY – WH08DK

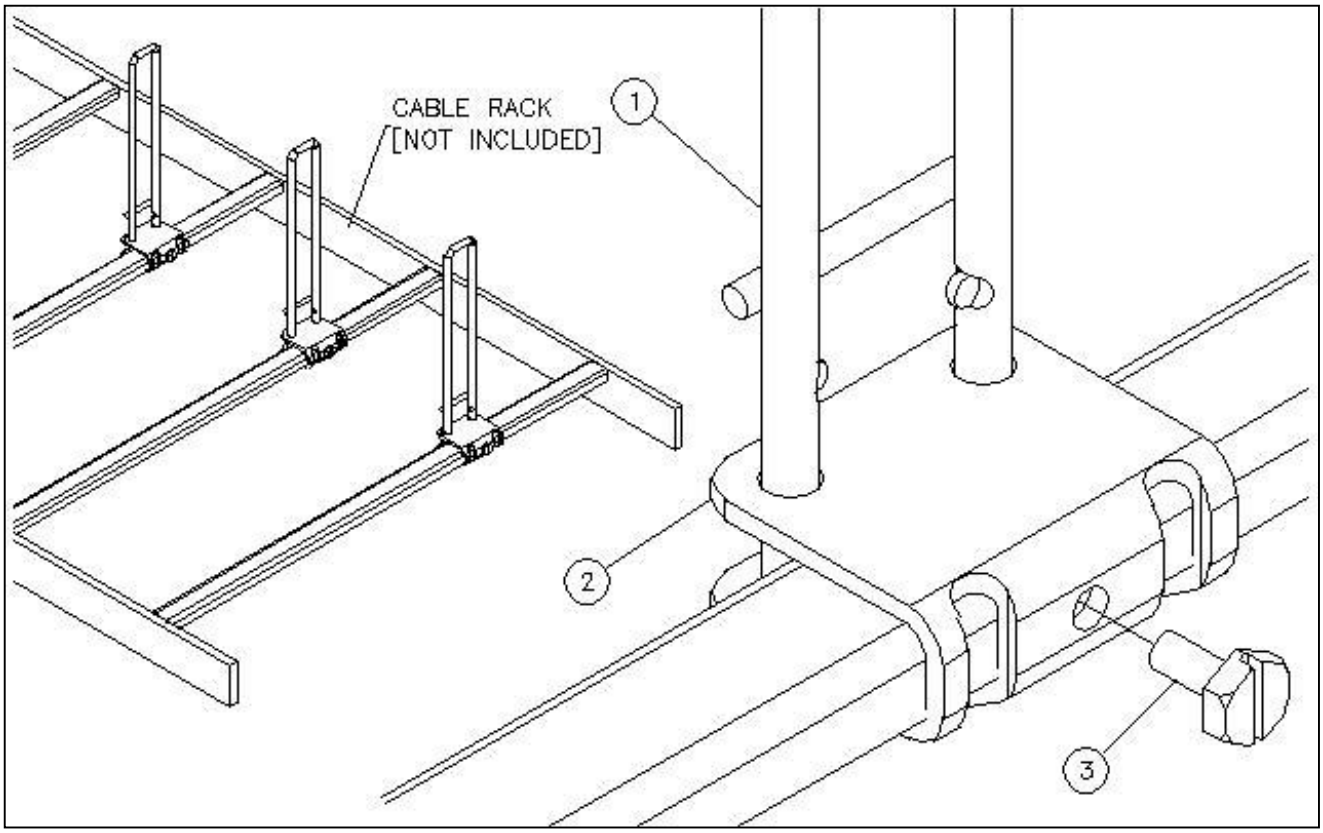

WH08DK			
ITEM#	QTY	CSF#	DESCRIPTION
1	1	WH08	8.00” WIRE HORN ZY
2	1	WHB05	WIRE HORN BRACKET ZY
3	1	HH0601S	1/4-20 HHMS X ½” LG. SLOTTED ZY

NOTES:
- CABLE RACK NOT INCLUDED
- FINISH: ZINC AND YELLOW

Specifications subject to change. Please contact CSF Customer Service for more information.
© copyright 2004 Central Steel Fabricators, Inc.
http://www.centralsteelfab.com ◆ 2100 Parkes Drive, Broadview, IL 60155
Phone: 708-652-2037 Fax: 708-652-7010

CCXXCN CORNER CLAMP KIT FOR 1.50” AND 2.00” STRINGER

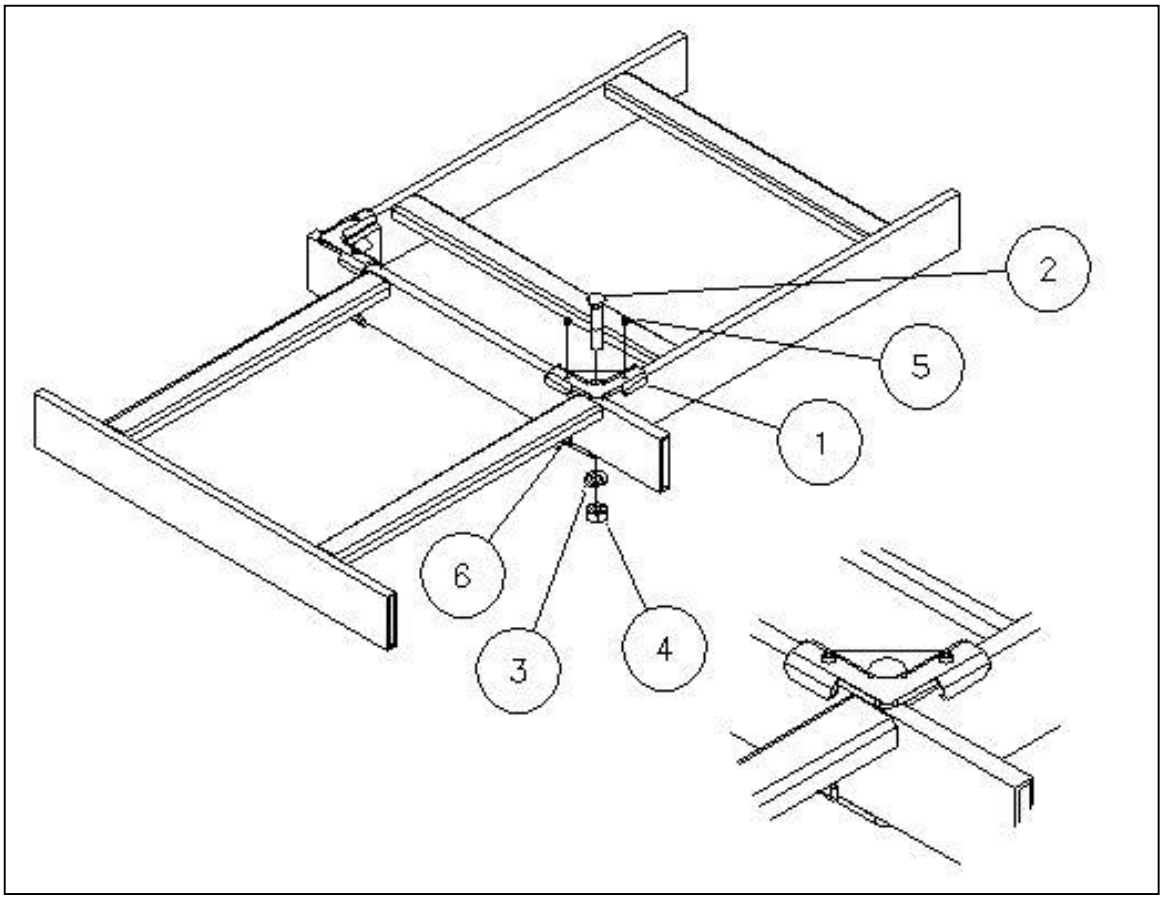

ITEM#	CSF#	CC12CN	CC22CN
1	CCCN	2	2
2	CB170	0	2
2	CB171	2	0
3	LW156	2	2
4	HN146	2	2
5	SS0303	4	4
6	CC	2	2

NOTES:

-INSTALLATION TECHNICIAN SHOULD CHECK CONNECTIONS WITH AN OHM METER TO VERIFY CONTINUITY.

-APPLY NO-OX TO SET SCREW AND POINT OF ATTACHMENT TO PREVENT OXIDATION OF CONNECTION.
- FINISH: ZINC AND YELLOW
- CABLE RACK NOT INCLUDED

RVSD*0215

Specifications subject to change. Please contact CSF Customer Service for more information.

© copyright 2004 Central Steel Fabricators, Inc.
http://www.centralsteelfab.com ◆ 2100 Parkes Drive, Broadview, IL 60155
Phone: 708-652-2037 Fax: 708-652-7010

STRAIGHT CLAMP KIT FOR 1.50" & 2.00" STRINGER

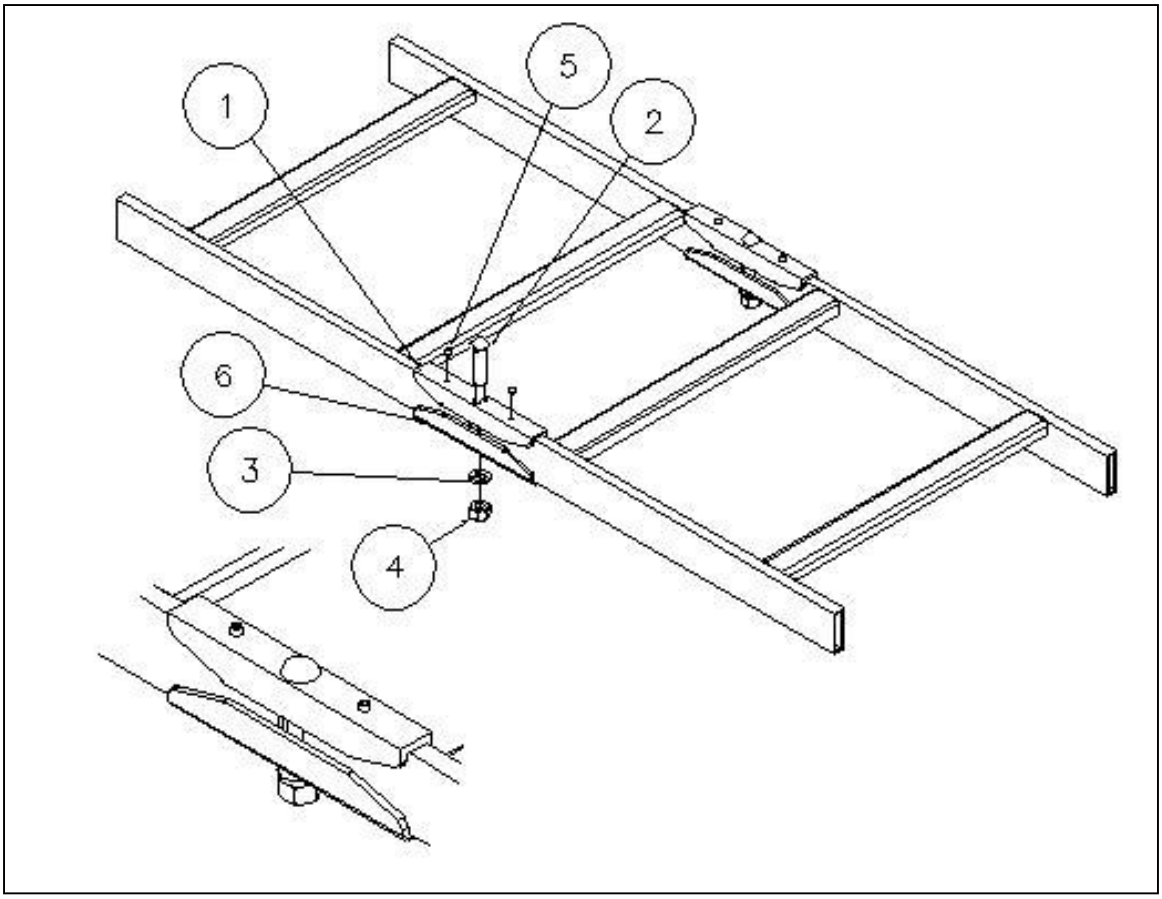

STRINGER SIZE:		1.50”	2.00”
ITEM#	CSF#	SC12CN	SC22CN
1	SCCN	2	2
2	CB172	2	0
2	CB173	0	2
3	LW156	2	2
4	HN146	2	2
5	SS0303	4	4
6	SC	2	2

NOTES:
-INSTALLATION TECHNICIAN SHOULD CHECK CONNECTIONS WITH AN OHM METER TO VERIFY CONTINUITY.
-APPLY NO-OX TO SET SCREW AND POINT OF ATTACHMENT TO PREVENT OXIDATION OF CONNECTION.
-FINISH: ZINC AND YELLOW
-CABLE RACK NOT INCLUDED

Specifications subject to change. Please contact CSF Customer Service for more information.
© copyright 2004 Central Steel Fabricators, Inc.
http://www.centralsteelfab.com ◆ 2100 Parkes Drive, Broadview, IL 60155
Phone: 708-652-2037 Fax: 708-652-7010

STRAIGHT CLAMP KIT DIFFERENT WIDTH STRINGERS CONTINUITY

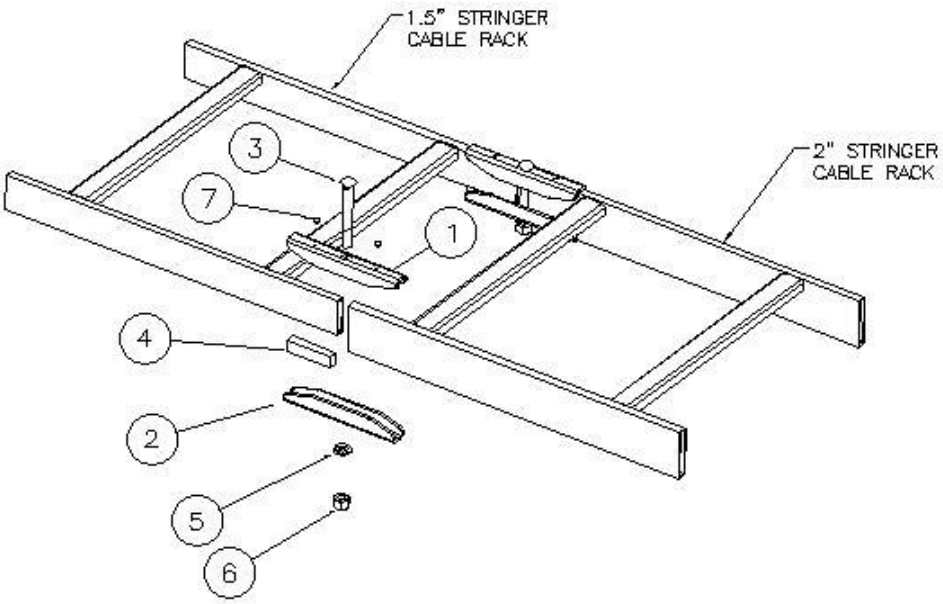

SC22DWCN		
ITEM#	CSF#	QUANTITY
1	SC	2
2	SCCN	2
3	CB173	2
4	A2243	2
5	LW156	2
6	HN146	4
7	SS0303	4

NOTES:
-INSTALLATION TECHNICIAN SHOULD CHECK CONNECTIONS WITH AN OHM METER TO VERIFY CONTINUITY.
-APPLY NO-OX TO SET SCREW AND POINT OF ATTACHMENT TO PREVENT OXIDATION OF CONNECTION.
-FINISH: ZINC AND YELLOW
-CABLE RACK NOT INCLUDED

Specifications subject to change. Please contact CSF Customer Service for more information.
© copyright 2004 Central Steel Fabricators, Inc.
http://www.centralsteelfab.com ◆ 2100 Parkes Drive, Broadview, IL 60155
Phone: 708-652-2037 Fax: 708-652-7010

ACS08KCN AUXILIARY CHANNEL SPLICE KIT

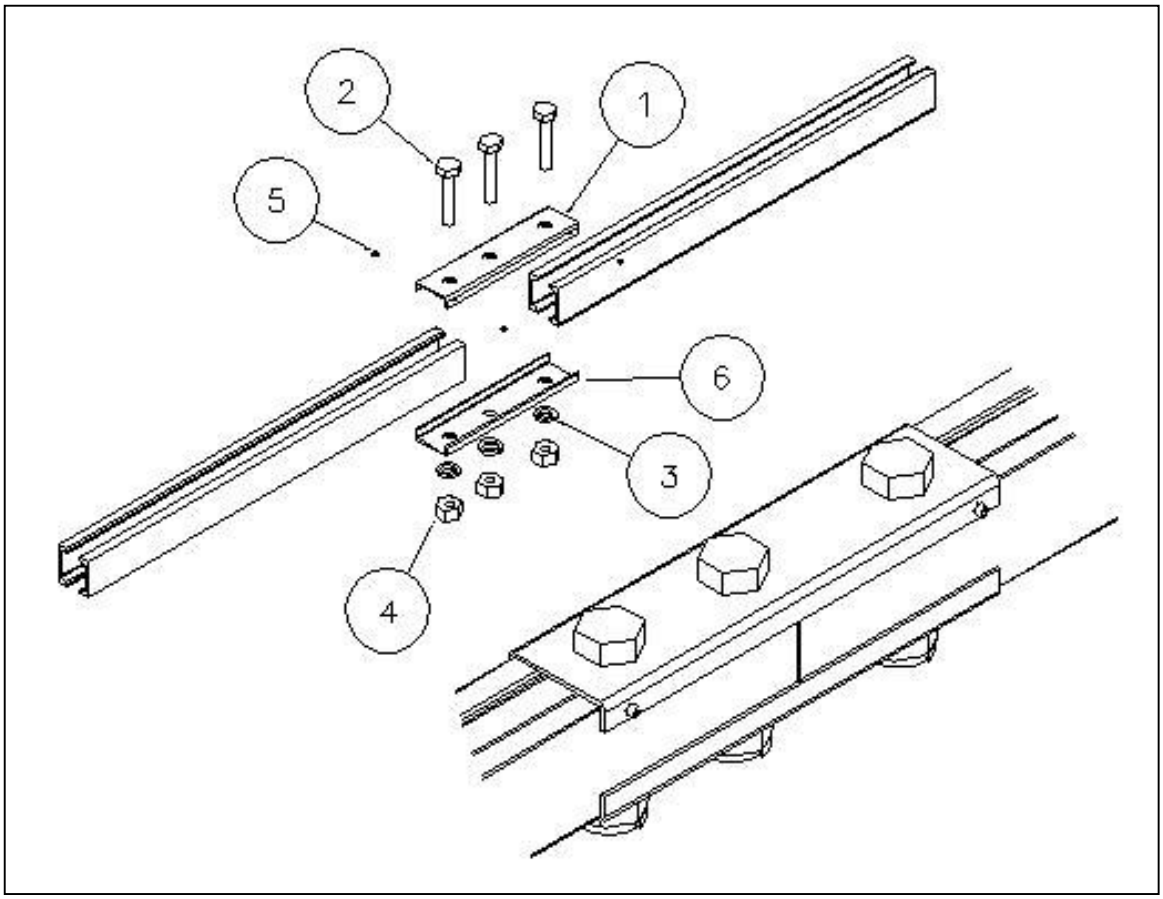

ACS08KCN		
ITEM#	CSF#	QTY
1	ACS08CN	1
2	HH1209	3
3	LW158	3
4	HN148	3
5	SS0303	4
6	ACS08	1

NOTES:
-INSTALLATION TECHNICIAN SHOULD CHECK CONNECTIONS WITH AN OHM METER TO VERIFY CONTINUITY.
-APPLY NO-OX TO SET SCREW AND POINT OF ATTACHMENT TO PREVENT OXIDATION OF CONNECTION.
-FINISH: ZINC AND YELLOW
-AUXILIARY FRAMING NOT INCLUDED

Specifications subject to change. Please contact CSF Customer Service for more information.
© copyright 2004 Central Steel Fabricators, Inc.
http://www.centralsteelfab.com ◆ 2100 Parkes Drive, Broadview, IL 60155
Phone: 708-652-2037 Fax: 708-652-7010

SAF3002CN AUXILIARY CHANNEL SPLICE KIT 2-BOLT CONTINUITY

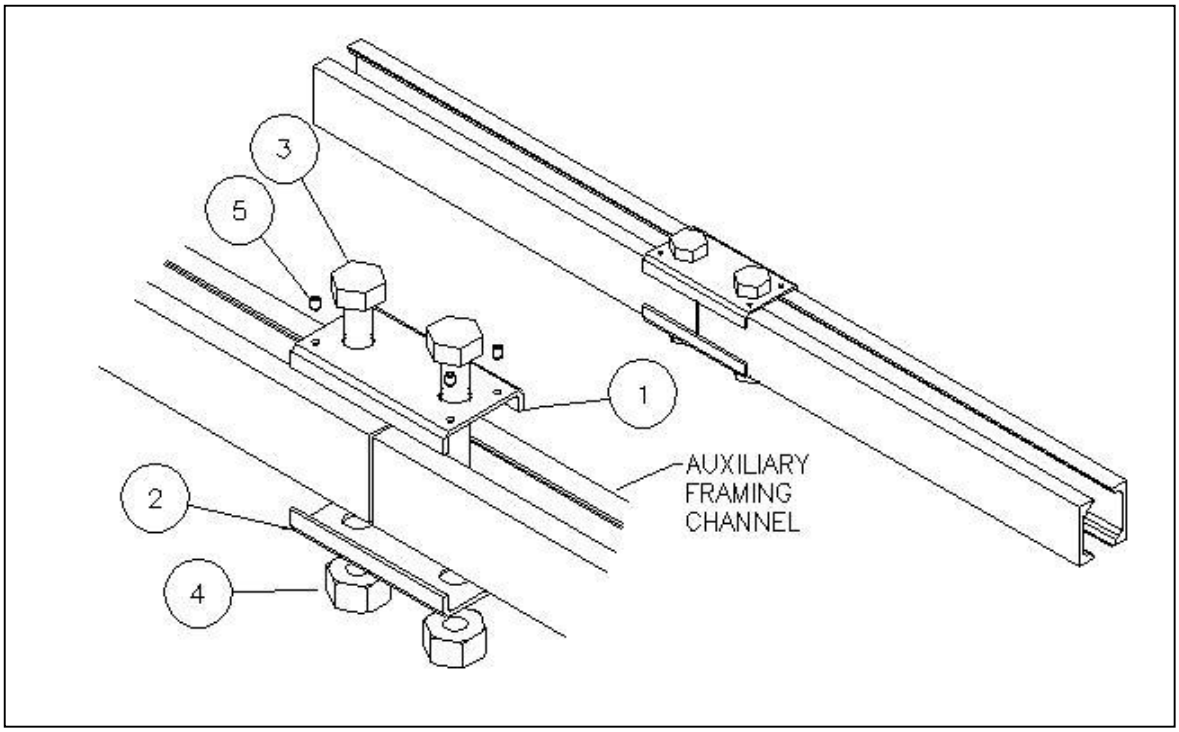

SAF3002CN		
ITEM#	CSF#	QTY
1	A2283-2CN	1
2	A2283-2	1
3	HH1209	2
4	HN148	2
5	SS0303	4

NOTES:
-INSTALLATION TECHNICIAN SHOULD CHECK CONNECTIONS WITH AN OHM METER TO VERIFY CONTINUITY.
-APPLY NO-OX TO SET SCREW AND POINT OF ATTACHMENT TO PREVENT OXIDATION OF CONNECTION.
-FINISH: ZINC AND YELLOW
-AUXILIARY FRAMING NOT INCLUDED

Specifications subject to change. Please contact CSF Customer Service for more information.
© copyright 2004 Central Steel Fabricators, Inc.
http://www.centralsteelfab.com ◆ 2100 Parkes Drive, Broadview, IL 60155
Phone: 708-652-2037 Fax: 708-652-7010

CABLE GUIDE ASSEMBLY- CGA02250 KIT

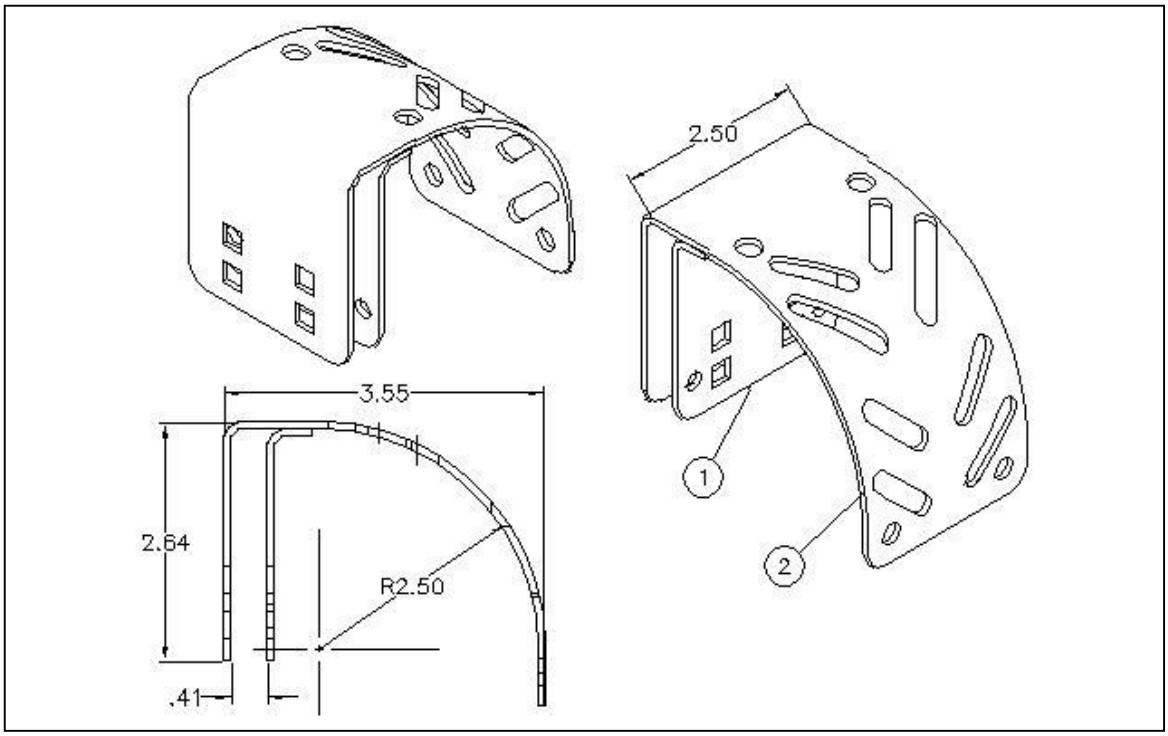

CGA02250DGK			
ITEM#	QTY	CSF#	DESCRIPTION
1	1	CGA0250H	CABLE GUIDE HOOK 2.50” LG.
2	1	CGA0250B	CABLE GUIDE BASE 2.50” LG. W/ 2.50” RADIUS

NOTES:
- FINISH: SEE TECH DATA FOR PAINT CODES

Specifications subject to change. Please contact CSF Customer Service for more information.
© copyright 2004 Central Steel Fabricators, Inc.
http://www.centralsteelfab.com ◆ 2100 Parkes Drive, Broadview, IL 60155
Phone: 708-652-2037 Fax: 708-652-7010

CABLE GUIDE ASSEMBLY- CGA05775 KIT

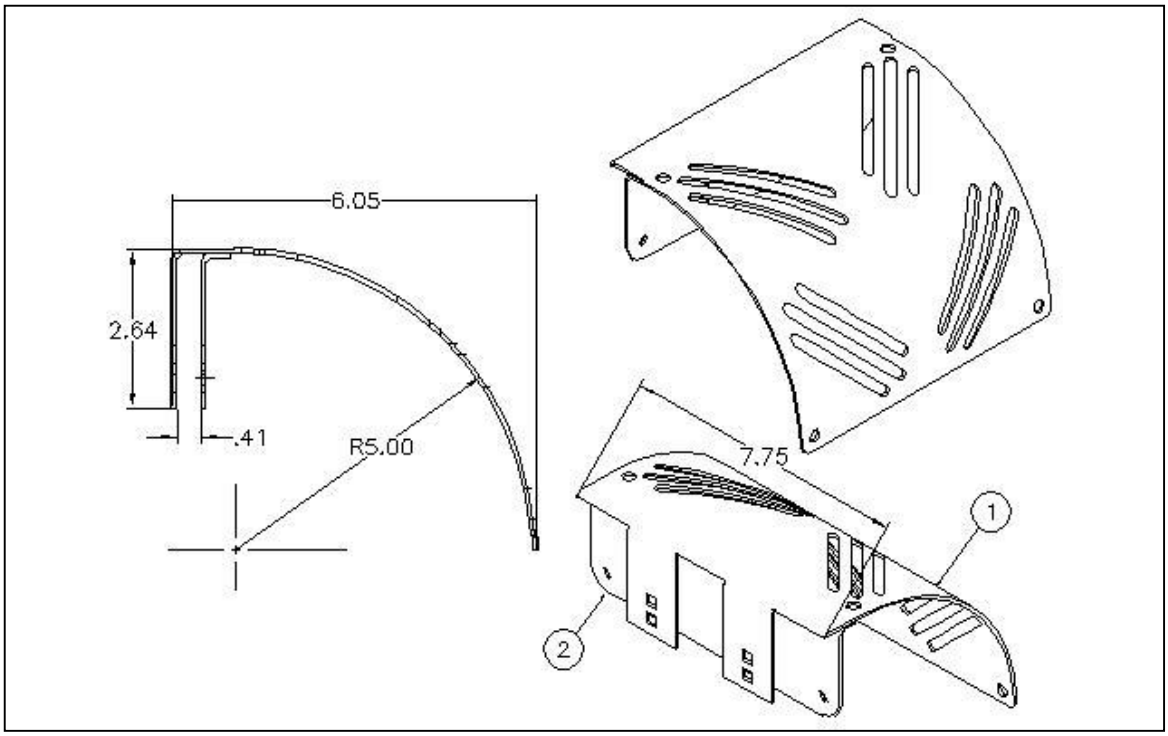

CGA05775DGK			
ITEM#	QTY	CSF#	DESCRIPTION
1	1	CGA05775B	CABLE GUIDE BASE 7.75” LG. W/ 5.00” RADIUS
2	1	CGA05775H	CABLE GUIDE HOOK 7.75” LG.

NOTES:
-FINISH: SEE TECH DATA FOR PAINT CODES

Specifications subject to change. Please contact CSF Customer Service for more information.
© copyright 2004 Central Steel Fabricators, Inc.
http://www.centralsteelfab.com ◆ 2100 Parkes Drive, Broadview, IL 60155
Phone: 708-652-2037 Fax: 708-652-7010

CABLE GUIDE ASSEMBLY- CGA07500 KIT

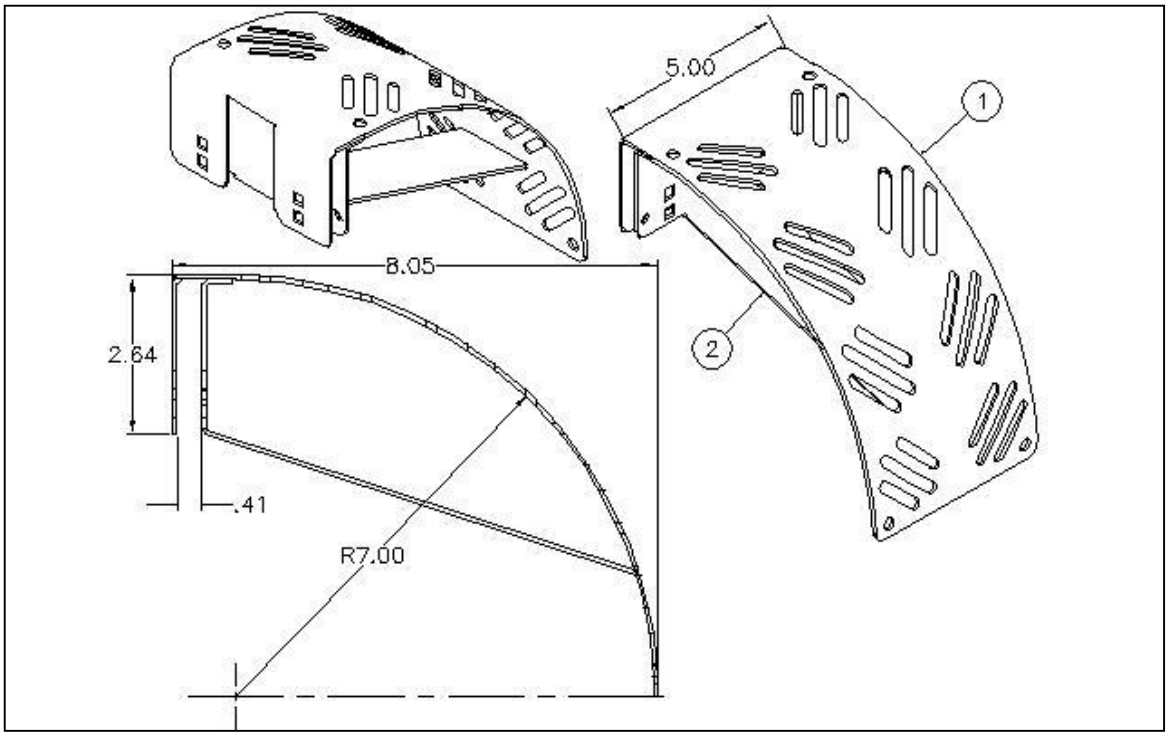

CGA07500DGK			
ITEM#	QTY	CSF#	DESCRIPTION
1	1	CGA0750B	CABLE GUIDE BASE 5.00” LG. W/ 7.00” RADIUS
2	1	CGA0750HSB	HOOK SUPPORT BAR 5.00” LG.

NOTES:
-FINISH: SEE TECH DATA FOR PAINT CODES

Specifications subject to change. Please contact CSF Customer Service for more information.
© copyright 2004 Central Steel Fabricators, Inc.
http://www.centralsteelfab.com ◆ 2100 Parkes Drive, Broadview, IL 60155
Phone: 708-652-2037 Fax: 708-652-7010

CABLE GUIDE ASSEMBLY- CGA10775 KIT

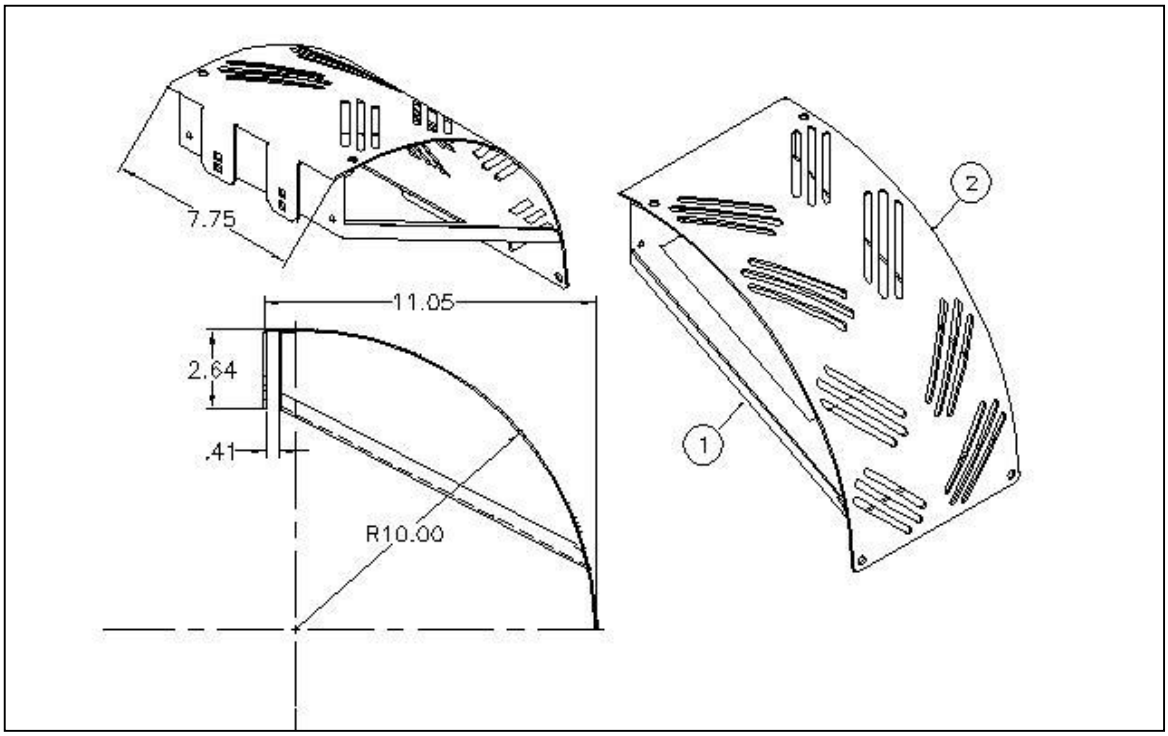

CGA10775DGK			
ITEM#	QTY	CSF#	DESCRIPTION
1	1	CGA10775HSB	HOOK SUPPORT BAR 7.75” LG.
2	1	CGA10775B	CABLE GUIDE BASE 7.75” LG. W/ 10.00” RADIUS

NOTES:
-FINISH: SEE TECH DATA FOR PAINT CODES

Specifications subject to change. Please contact CSF Customer Service for more information.
© copyright 2004 Central Steel Fabricators, Inc.
http://www.centralsteelfab.com ◆ 2100 Parkes Drive, Broadview, IL 60155
Phone: 708-652-2037 Fax: 708-652-7010

DISTRIBUTION PLASTIC POST KIT– DPP03K04

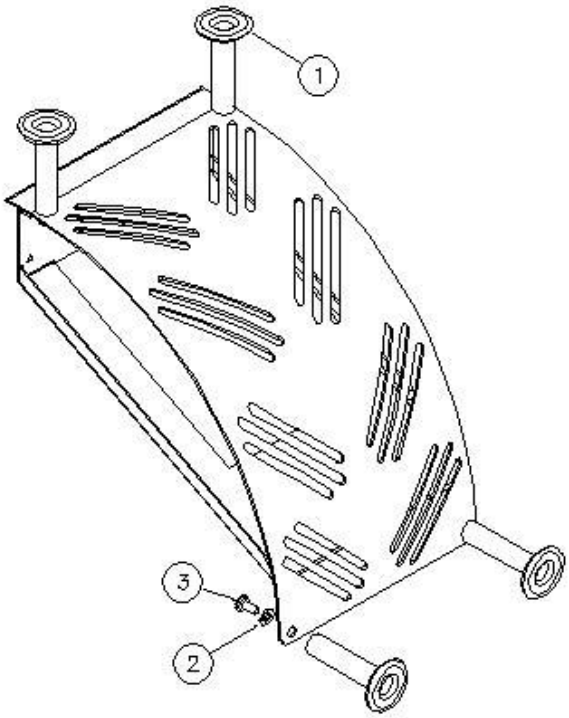

DPP03K04			
ITEM#	QTY	CSF#	DESCRIPTION
1	4	DPP03	DISTRIBUTION PLASTIC POST 3” LONG
2	4	LW154SS	¼” SPRING LOCK WASHER STAINLESS STEEL
3	4	RH0605ST	¼” – 20 SL PHMS SELF TAP .50” ZY

NOTES:
- CGA SOLD SEPARATELY

Specifications subject to change. Please contact CSF Customer Service for more information.
© copyright 2004 Central Steel Fabricators, Inc.
http://www.centralsteelfab.com ◆ 2100 Parkes Drive, Broadview, IL 60155
Phone: 708-652-2037 Fax: 708-652-7010

SUPPORT CABLE TURN – SCT0136DG

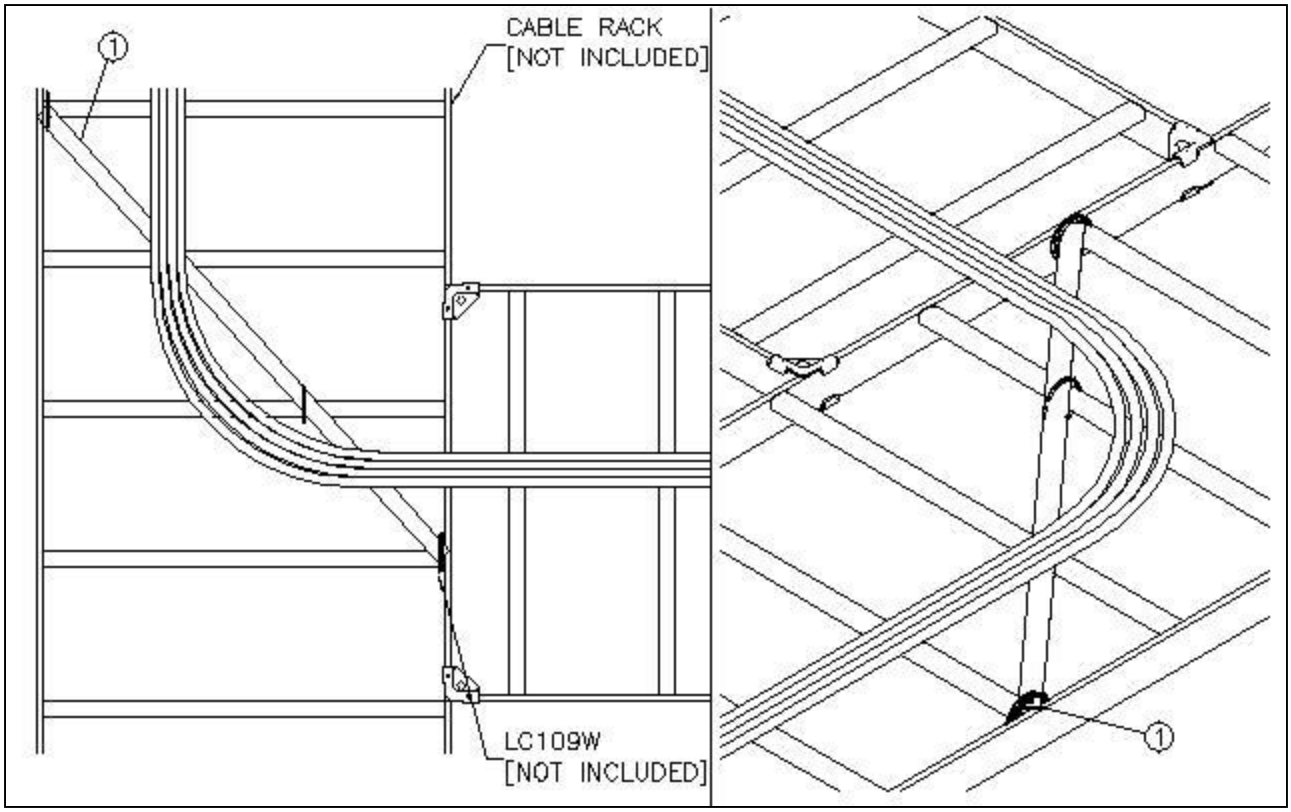

SUPPORT CABLE TURN – SCT0136DG			
ITEM#	QTY	CSF#	DESCRIPTION
1	1	SCT0136DG	SUPPORT CABLE TURN 36.00”

NOTES:

- 36” LONG – CUT IN FIELD TO DESIRED LENGTH
- LC109W – 9 PLY LACING CORD SOLD SEPARATELY

Specifications subject to change. Please contact CSF Customer Service for more information.
© copyright 2004 Central Steel Fabricators, Inc.
http://www.centralsteelfab.com ◆ 2100 Parkes Drive, Broadview, IL 60155
Phone: 708-652-2037 Fax: 708-652-7010

ACR8101 – ATTACH CABLE RACK KIT ZY

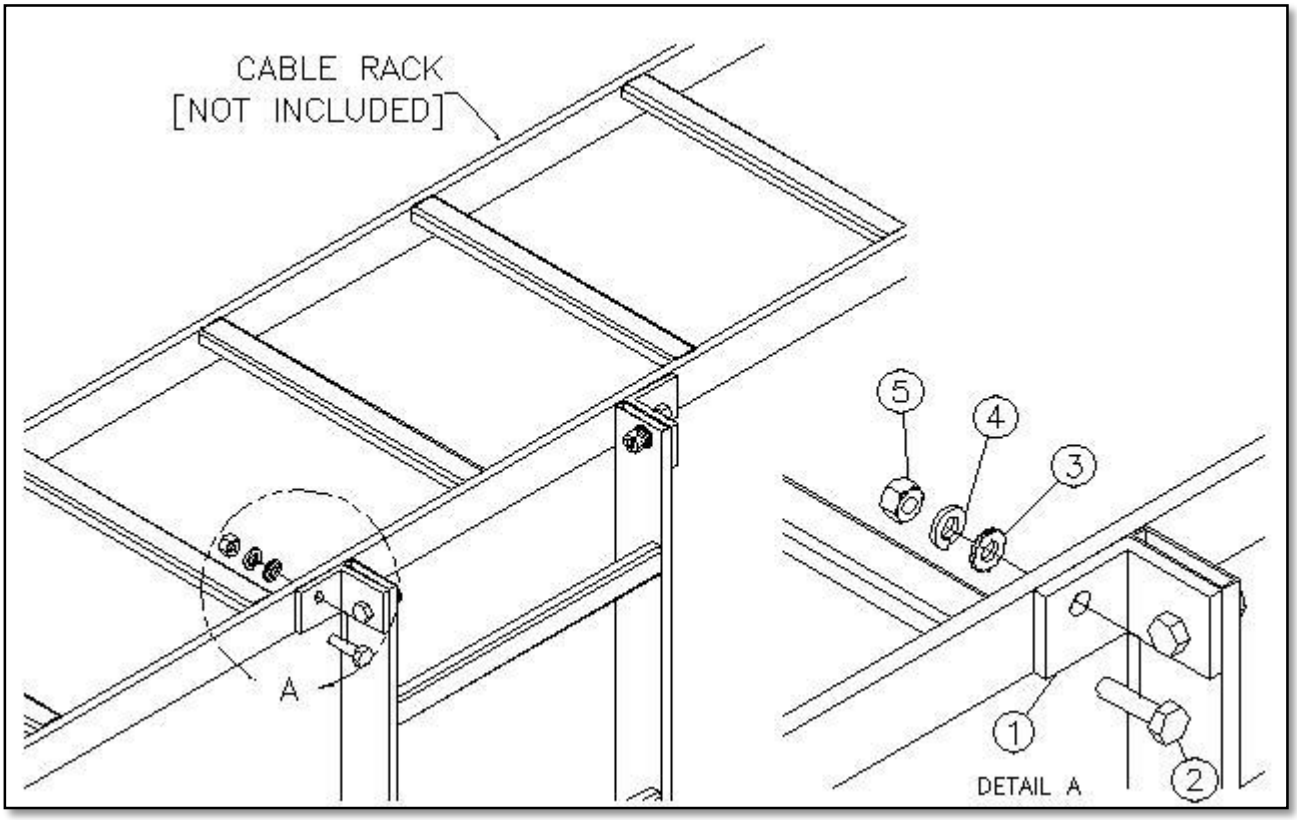

ACR8101 – ATTACH CABLE RACK KIT ZY			
ITEM#	QTY	CSF#	DESCRIPTION
1	2	A2251	2.00” X 2.00” X [1/4” THK] X 1.50” WIDE ANGLE BRACKET
2	4	HH1006	3/8-16 HHCS X 1.25” LG. - ZY
3	4	LWE156	3/8” EXTERNAL TOOTH LOCKWASHER ZY
4	4	LW156	3/8” SPRING LOCK WASHER ZY
5	4	HN146	3/8-16 HEX NUT ZY

Specifications subject to change. Please contact CSF Customer Service for more information.
© copyright 2004 Central Steel Fabricators, Inc.
http://www.centralsteelfab.com ◆ 2100 Parkes Drive, Broadview, IL 60155
Phone: 708-652-2037 Fax: 708-652-7010

CJB6202 – Clip "J" Bolt Kit [1.50" Cable Rack to UST120 Unistrut]

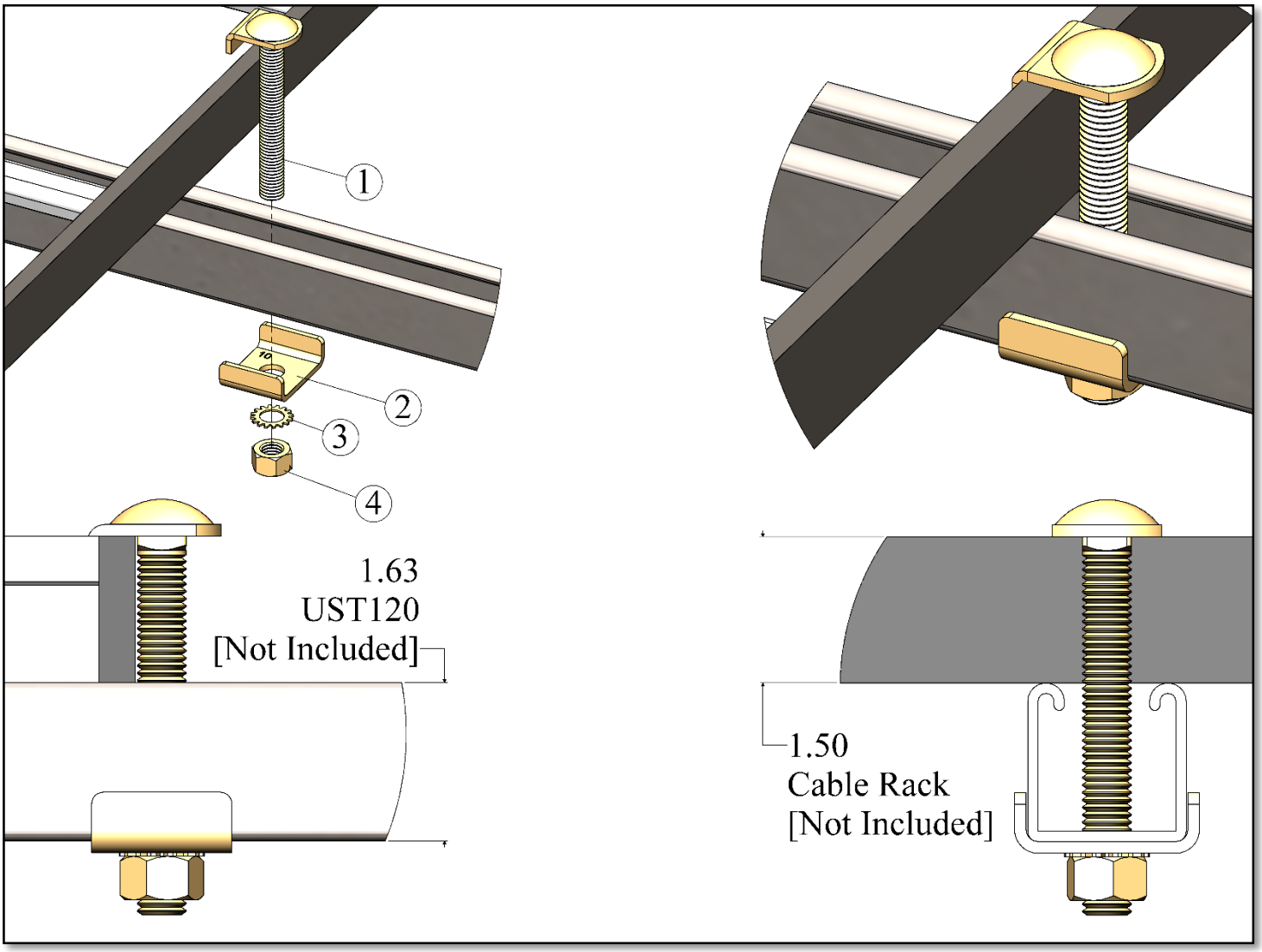

CJB6202 – Clip "J" Bolt Kit [1.50" Cable Rack to UST120 Unistrut]			
Item#	CSF P/N#	QTY	Description
1	CJB3	1	1/2-13 Clip "J" Bolt x 3.88" LG.
2	FC310	1	Framing Clip
3	LWE157	1	1/2" External Tooth Lock Washer
4	HN147	1	1/2-13 Hex Nut

Specifications subject to change. Please contact CSF Customer Service for more information.
© copyright 2004 Central Steel Fabricators, Inc.

http://www.centralsteelfab.com ◆ 2100 Parkes Drive, Broadview, IL 60155
Phone: 708-652-2037 Fax: 708-652-7010

CJB6203 – Clip "J" Bolt Kit [2.00" Cable Rack to UST120 Unistrut]

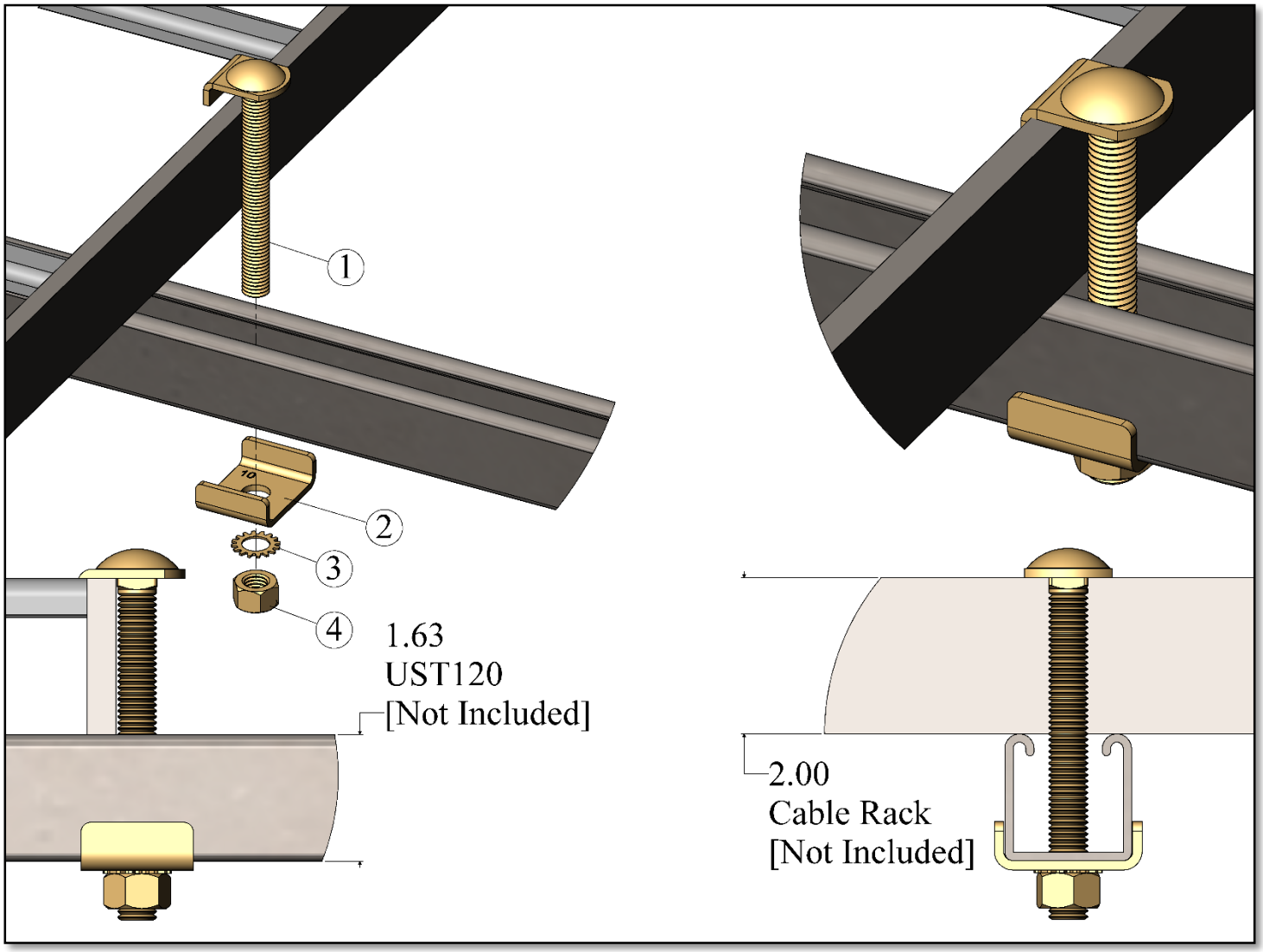

CJB6203 – Clip "J" Bolt Kit [2.00" Cable Rack to UST120 Unistrut]			
Item#	CSF P/N#	QTY	Description
1	CJB4	1	1/2-13 Clip "J" Bolt x 4.38" LG.
2	FC310	1	Framing Clip
3	LWE157	1	1/2" External Tooth Lock Washer
4	HN147	1	1/2-13 Hex Nut

RVSD*1217

Specifications subject to change. Please contact CSF Customer Service for more information.

© copyright 2004 Central Steel Fabricators, Inc.

http://www.centralsteelfab.com ◆ 2100 Parkes Drive, Broadview, IL 60155
Phone: 708-652-2037 Fax: 708-652-7010

Contents

- RS7100 Series Unequal Flange Racks
- RS7200 Series Unequal Flange Racks
- RS7300 Series Unequal Flange Racks
- RS8100 Series Unequal Flange Racks
- RS8200 Series Unequal Flange Racks
- RS8300 Series Unequal Flange Racks
- Base Bumper Rail
- Base Filler Extension
- Unequal Flange Base Filler
- Base Bumper Rail Base Filler RU
- Network Bay Base Filler
- Cabling Section
- Cable Tie Bar
- Cable Ring Tie Bar
- Designation Card Holder
- Duplex Power Outlet
- Duplex Power Kit RU [Pair]
- Economy Rack
- Enclosed End Guard
- EGAXX25 15” To 24” Compartmentalized End Guard
- Network Bay End Guard With 2-1/2” or 5” Filler Kits
- UEF Bay End Guard With 2-1/2” Or 5” Filler Kits
- End Guard Kit
- End Guard Shield Kit
- End Guard Shield kit [EGS25XX]
- End Guard Shield kit [EGS35XX]
- End Guard Shield kit [EGS47XX]
- Seismic End Shield Kit
- Seismic End Shield Kit [ESE25XX]
- Seismic End Shield Kit [ESE35XX]
- Seismic End Shield Kit [ESE47XX]
- End Cover Kit [ECXXXX]
- End Cover Kit [EC25XX]
- End Cover Kit [EC35XX]
- End Cover Kit [EC47XX]
- Network Filler Panel Cable Section
- WMP23XX Wire Management Panel
- VCR0204XXK – Vertical Cable Bracket
- WHG1823XX Wire Harness Guard
- Jumper Through
- 23.00” Heat Deflector Kit
- 2.00” X 23.00” Adjustable Heat Baffle
- Equipment Shelf
- Collapsible Writing Shelf
- CTOX23XX Cable Troughs
- RX0300 Series Extension Rack Kit
- RX0400 Series Extension Rack Kit
- RX0500 Series Extension Rack Kit
- RX0600 Series Extension Rack Kit
- RX1100 Series Extension Rack Kit
- RX1200 Series Extension Rack Kit
- RX1300 Series Extension Rack Kit
- RX1400 Series Extension Rack Kit
- RXE04XX Series Seismic Extension Rack Kit 19.00”
- RXE16XX Series Seismic Extension Rack Kit 23.00”
- RG3XXXXX Series
- RS Series Floor Support
- RS Series Gated Relay Rack
- GRA Series Guard Rail Adapter
- GRB Series Guard Rail Bumper
- GRE Series Guard Rail Extension
- GRT Series Guard Rail Transition
- ISS Insulating Strip
- RNP Series Blank And AC Power Strips
- RNPS19XXK – AC Power Strip Series
- RNPS23XXK – AC Power Strip Series
- RNPB01XXK – Blank Power Strip Series
- RNPB02XXK – Blank Power Strip Series
- RNPB05XXK – Blank Power Strip Series
- RNPB07XXK – Blank Power Strip Series
- RNPB10XXK – Blank Power Strip Series
- RNPB19XXK – Blank Power Strip Series
- RNPB23XXK – Blank Power Strip Series
- Blank Panel (EIA) Mounting Hole Pattern
- Blank Panel (WECO) Mounting Hole Pattern
- Universal Blank Panel
- RA200 Series Rack Adapters
- RA300 Series Rack Adapters
- RA400 Series Rack Adapters
- RA700 Series Universal To EIA Rack Adapters
- RA800 Series Universal To WECO Rack Adapters
- Rack Cover
- RUB Series Guard Box Extender
- RF 3101 Rack Fastener
- Extension Rack 1” Hole Spacing
- Extension Rack 1” Hole Spacing – 19” Wide
- Extension Rack 1” Hole Spacing – 23” Wide
- Extension Rack 1.75” Hole Spacing – 19” Wide
- Extension Rack 1.75” Hole Spacing – 23” Wide
- RGR0500 Series Rear Guard Rail
- GRA Series Guard Rail

Specifications subject to change. Please contact CSF Customer Service for more information.

© copyright 2004 Central Steel Fabricators, Inc.
http://www.centralsteelfab.com ◆ 2100 Parkes Drive, Broadview, IL 60155
Phone: 708-652-2037 Fax: 708-652-7010

Contents

- RN5 Series Guard Box Wide Flanged 1.75” Hole Spacing
- RN5 Series Guard Box Wide Flanged 1” Hole Spacing
- RN6 Series Guard Box Narrow Flanged 1.75” Hole Spacing
- RN6 Series Guard Box Narrow Flanged 1” Hole Spacing
- Seismic Z4 Guard Box Wide Flange 1.75” Hole Spacing
- Seismic Z4 Guard Box Wide Flange 1” Hole Spacing
- Seismic Z4 Guard Box Narrow Flange 1.75” Hole Spacing
- Seismic Z4 Guard Box Narrow Flange 1” Hole Spacing
- R400 Series Network Bay Cover
- Network Bay Filler Panel And Base Filler Unit With Hardware
- FP Series Network Bay Filler Panel
- FPA Series Network Bay Filler Panel Kit
- RGR Series Rear Guard Rail
- RU5 Series Guard Box Wide Flanged 1.75” Hole Spacing
- RU5 Series Guard Box Wide Flanged 1” Hole Spacing
- RU6 Series Guard Box Narrow Flanged 1.75” Hole Spacing
- RU6 Series Guard Box Flanged 1” Hole Pattern
- Seismic Z4 Guard Wide Flange 1.75” Hole Spacing
- Seismic Z4 Guard Box Wide Flange 1” Hole Spacing
- Seismic Z4 Guard Box Narrow Flange 1.75” Hole Spacing
- Seismic Z4 Guard Box Narrow Flange 1” Hole Spacing
- FLX Series Filler Panel Kit With Base Filler
- FL Series Unequal Flange Filler Panel
- FLA Series Filler Panel Kit With Base Filler
- IP Series Unequal Flange Insulating Pads And Kits
- IP Series Network Rack Insulating Pads And kits
- WHBX19XX - Series Wire Harness Bracket
- WHBX23XX - Series Wire Harness Bracket
- CLB Series Cable Lacing Bracket
- RN Base Extender
- RN Removable Guard Box With Cover
- SIGMA Series RNX - BAY
- SIGMA Series Base Filler
- SIGMA Series 5” Removable Base
- SIGMA Series Base Filler Extension
- SIGMA Series Guard Rail Extension
- SIGMA Series End Guard
- SIGMA Series Extension Rack
- EGX16 SIGMA Series End Guard
- Bay Junction Kit ZY – JK0301

Specifications subject to change. Please contact CSF Customer Service for more information.
© copyright 2004 Central Steel Fabricators, Inc.
http://www.centralsteelfab.com ◆ 2100 Parkes Drive, Broadview, IL 60155
Phone: 708-652-2037 Fax: 708-652-7010

RS7100 Series – 1.75” TO 1.75 MOUNTING

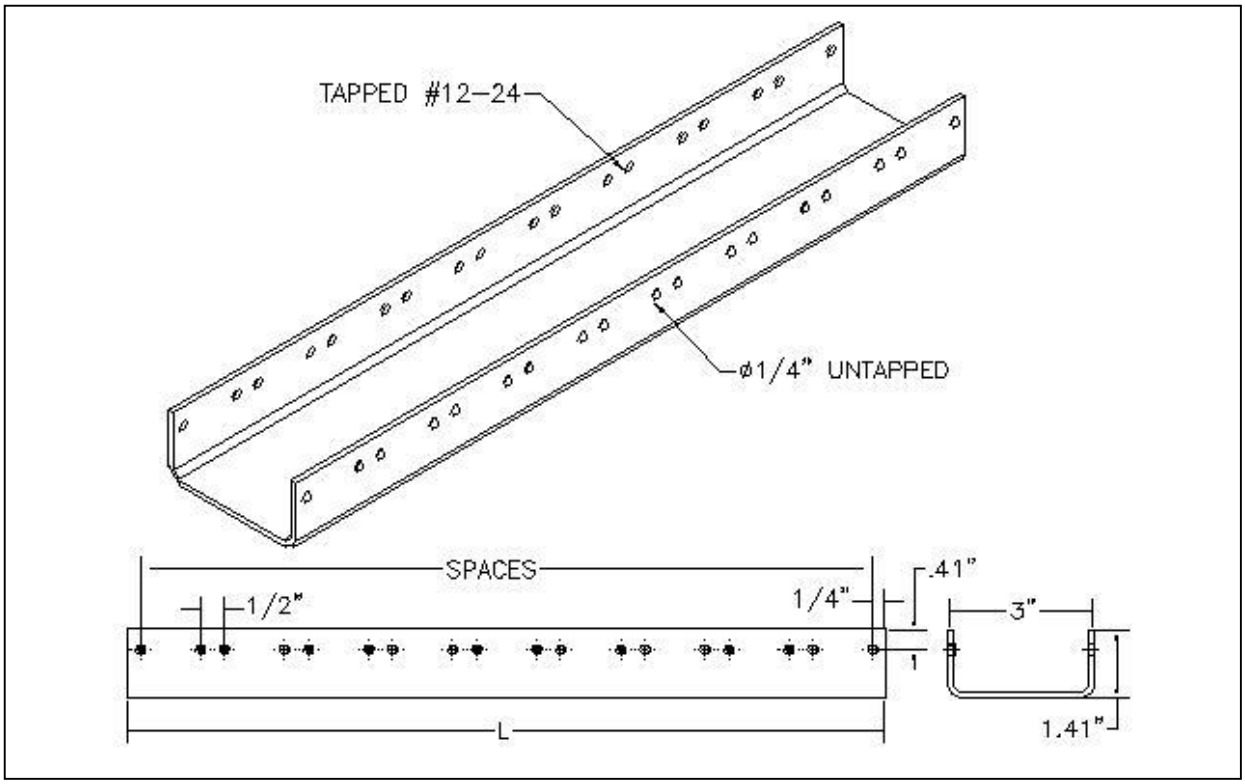

CSF#	RMU	L
RS7101XX	1	1 3/4"
RS7102XX	2	3 1/2"
RS7103XX	3	5 1/4"
RS7104XX	4	7"
RS7105XX	5	8 3/4"
RS7106XX	6	10 1/2"

NOTES:
FINISHES: SEE TECH DATA FOR PAINT CODES
KIT INCLUDES ALL MOUNTING HARDWARE

RVSD*1010

Specifications subject to change. Please contact CSF Customer Service for more information.

© copyright 2004 Central Steel Fabricators, Inc.
http://www.centralsteelfab.com ◆ 2100 Parkes Drive, Broadview, IL 60155
Phone: 708-652-2037 Fax: 708-652-7010

RS7200 Series – 1.75” To 1.75” MOUNTING

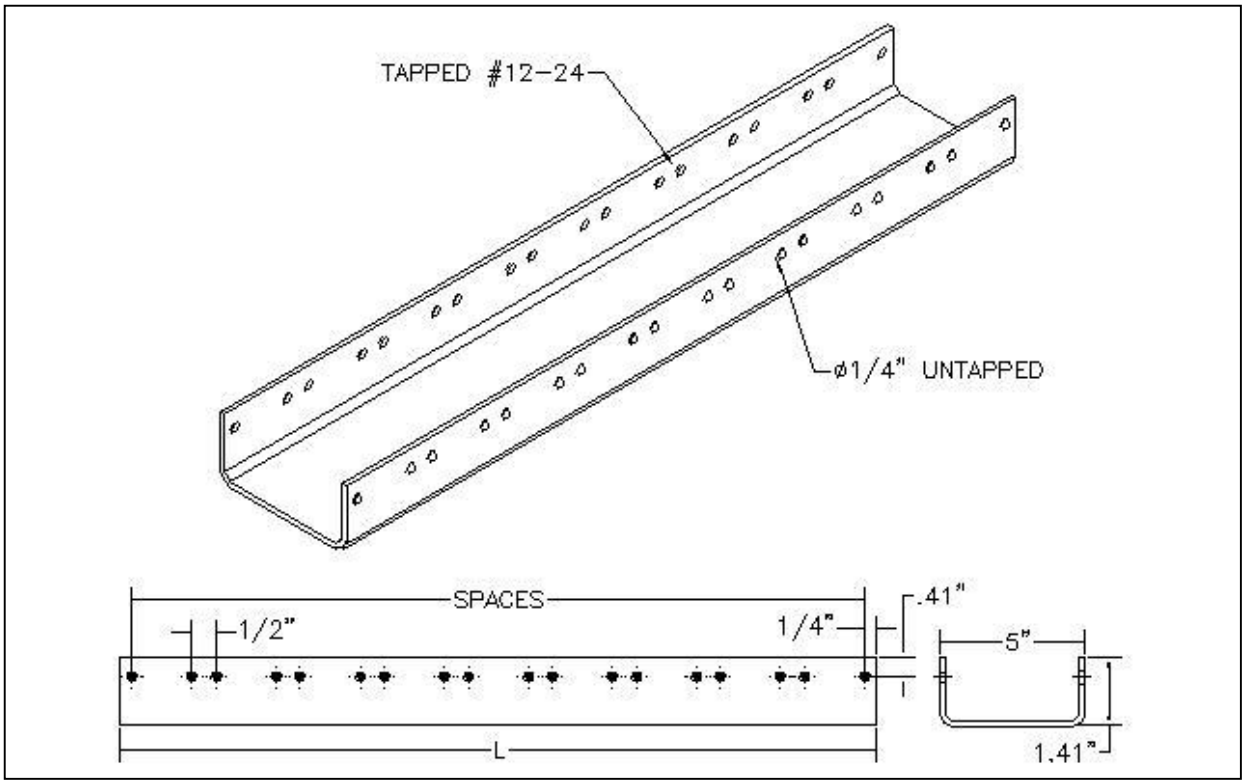

BRACKET QTY	CSF#	RMU	LENGTH	HARDWARE QTY
2	RS7201XX	1	1.75"	8
2	RS7202XX	2	3.50"	8
2	RS7203XX	3	5.25"	8
2	RS7204XX	4	7.00"	8
2	RS7205XX	5	8.75"	12
2	RS7206XX	6	10.50”	16

NOTES:
FINISHES: SEE COLOR CHART
KIT INCLUDES ALL MOUNTING HARDWARE
OTHER DEPTHS AVAILABLE

RVSD*0312

Specifications subject to change. Please contact CSF Customer Service for more information.

© copyright 2004 Central Steel Fabricators, Inc.
http://www.centralsteelfab.com ◆ 2100 Parkes Drive, Broadview, IL 60155
Phone: 708-652-2037 Fax: 708-652-7010

RS7300 Series – 1.75” TO 1.75” MOUNTING

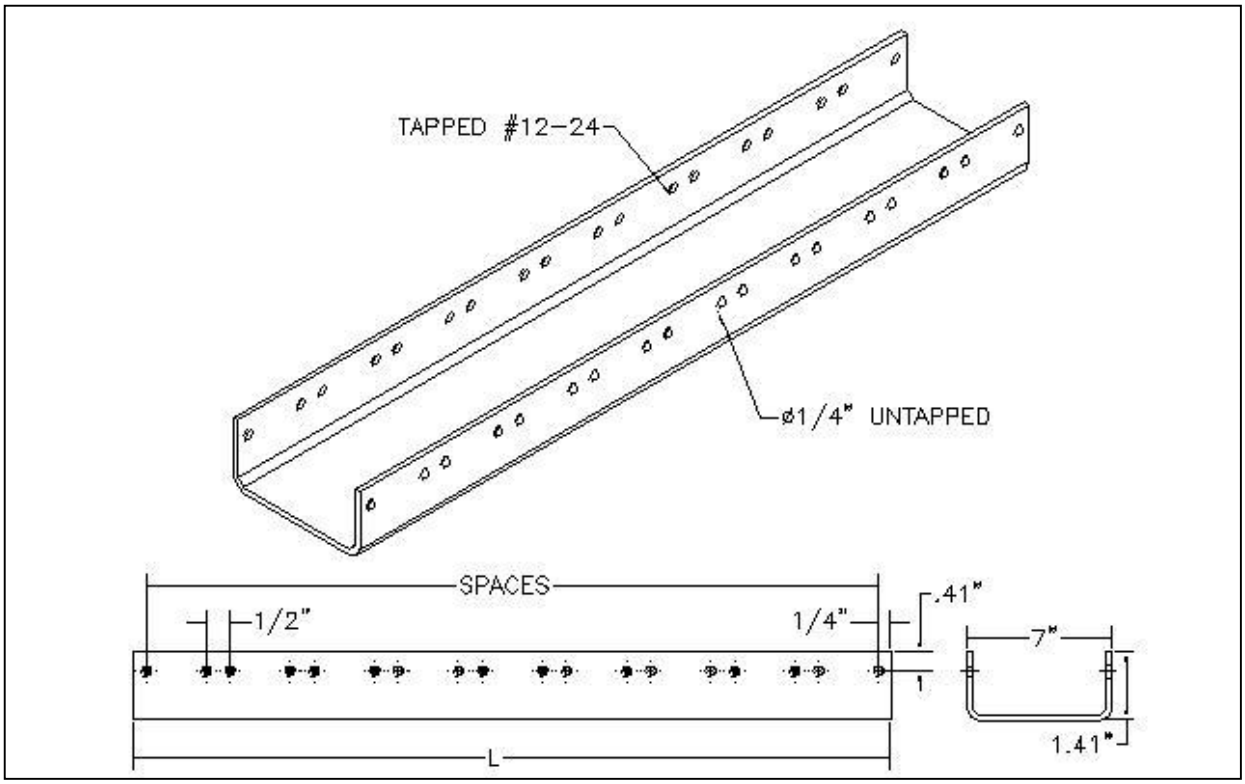

CSF#	RMU	L
RS7301XX	1	1 3/4"
RS7302XX	2	3 1/2"
RS7303XX	3	5 1/4"
RS7304XX	4	7"
RS7305XX	5	8 3/4"
RS7306XX	6	10 1/2"

NOTES:
FINISHES: SEE COLOR CHART
KIT INCLUDES ALL MOUNTING HARDWARE
OTHER DEPTHS AVAILABLE

RVSD*1010

Specifications subject to change. Please contact CSF Customer Service for more information.

© copyright 2004 Central Steel Fabricators, Inc.
http://www.centralsteelfab.com ◆ 2100 Parkes Drive, Broadview, IL 60155
Phone: 708-652-2037 Fax: 708-652-7010

RS8100 Series – 1.00” TO 1.00” MOUNTING

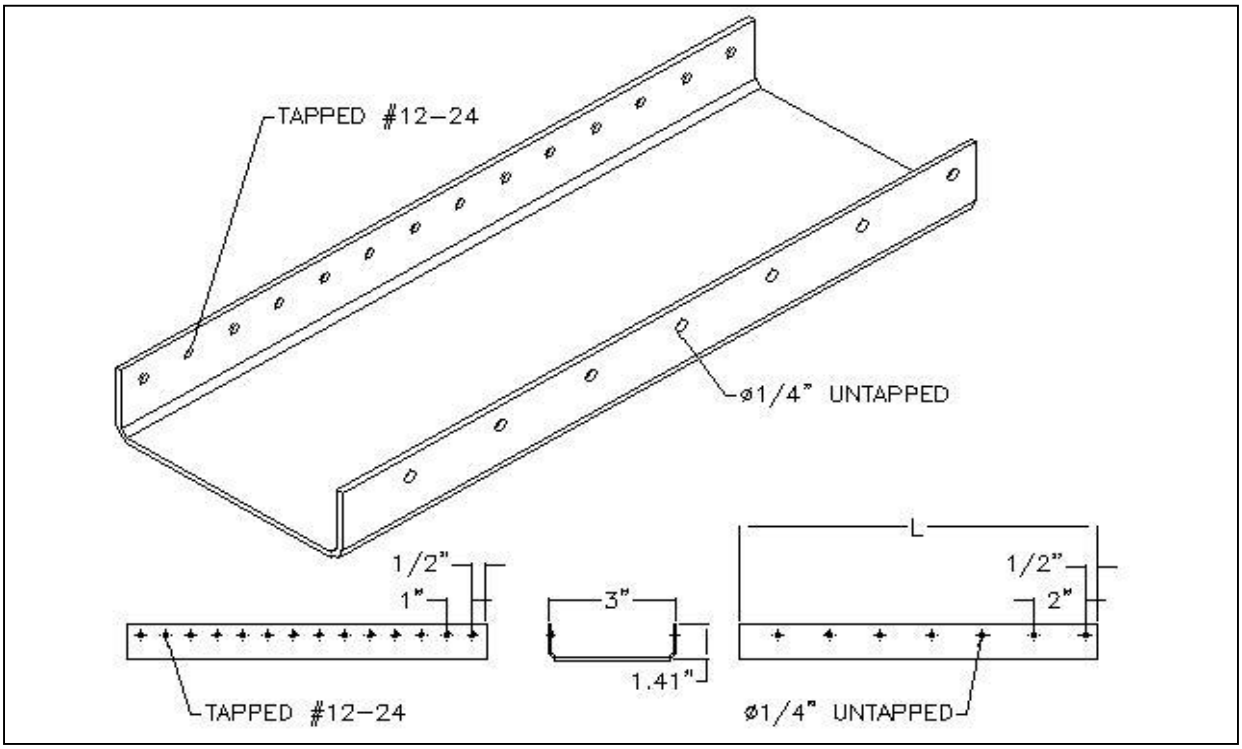

CSF#	RMU	L
RS8101XX	1	2"
RS8102XX	2	4"
RS8103XX	3	6"
RS8104XX	4	8"
RS8105XX	5	10"
RS8106XX	6	12"
RS8107XX	7	14"
RS8108XX	8	16"
RS8109XX	9	18"
RS8110XX	10	20"
RS8111XX	11	22"
RS8112XX	12	24"
RS8113XX	13	26"
RS8114XX	14	28"
RS8115XX	15	30"

NOTES:
FINISHES: SEE TECH DATA FOR PAINT CODES
KIT INCLUDES ALL MOUNTING HARDWARE

Specifications subject to change. Please contact CSF Customer Service for more information.

© copyright 2004 Central Steel Fabricators, Inc.
http://www.centralsteelfab.com ◆ 2100 Parkes Drive, Broadview, IL 60155
Phone: 708-652-2037 Fax: 708-652-7010

RS8200 Series – 1.00” TO 1.00” MOUNTING

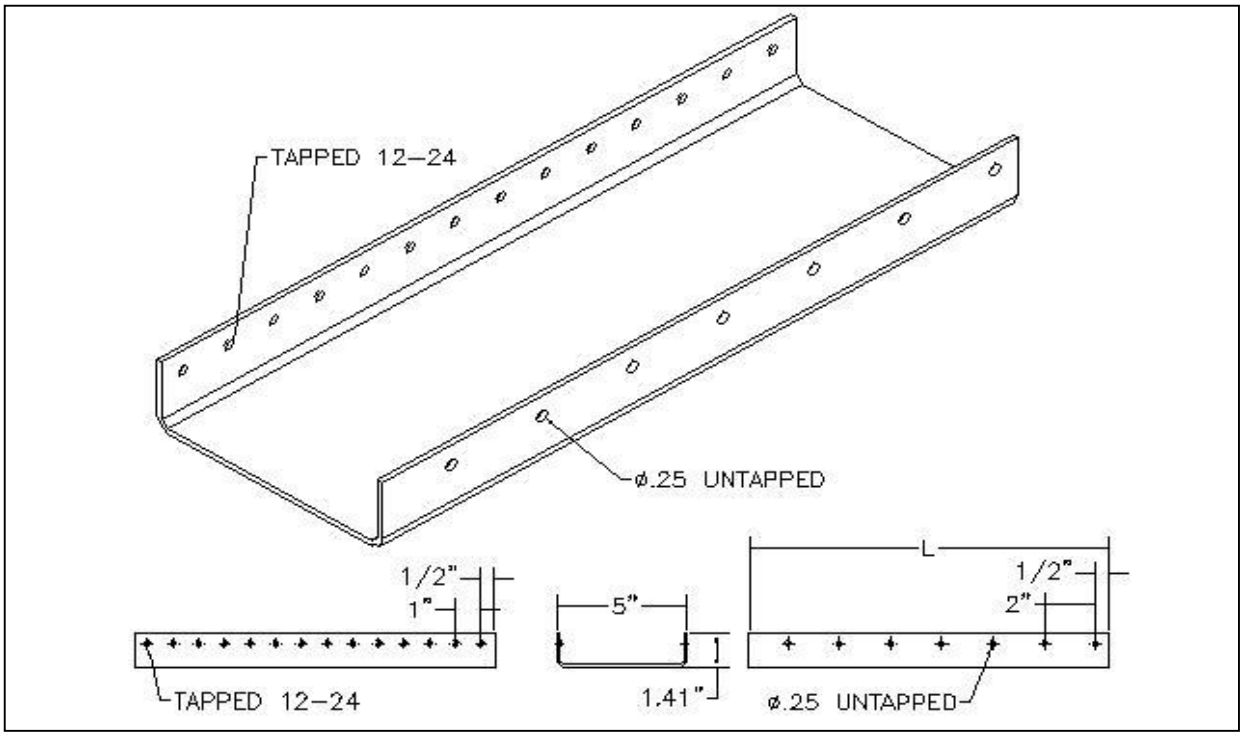

CSF#	RMU	L
RS8201XX	1	2"
RS8202XX	2	4"
RS8203XX	3	6"
RS8204XX	4	8"
RS8205XX	5	10"
RS8206XX	6	12"
RS8207XX	7	14"
RS8208XX	8	16"
RS8209XX	9	18"
RS8210XX	10	20"
RS8211XX	11	22"
RS8212XX	12	24"
RS8213XX	13	26"
RS8214XX	14	28"
RS8215XX	15	30"

NOTES:
FINISHES: SEE TECH DATA FOR PAINT CODES
KIT INCLUDES ALL MOUNTING HARDWARE

Specifications subject to change. Please contact CSF Customer Service for more information.

© copyright 2004 Central Steel Fabricators, Inc.
http://www.centralsteelfab.com ◆ 2100 Parkes Drive, Broadview, IL 60155
Phone: 708-652-2037 Fax: 708-652-7010

RS8300 Series – 1.00” to 1.00” MOUNTING

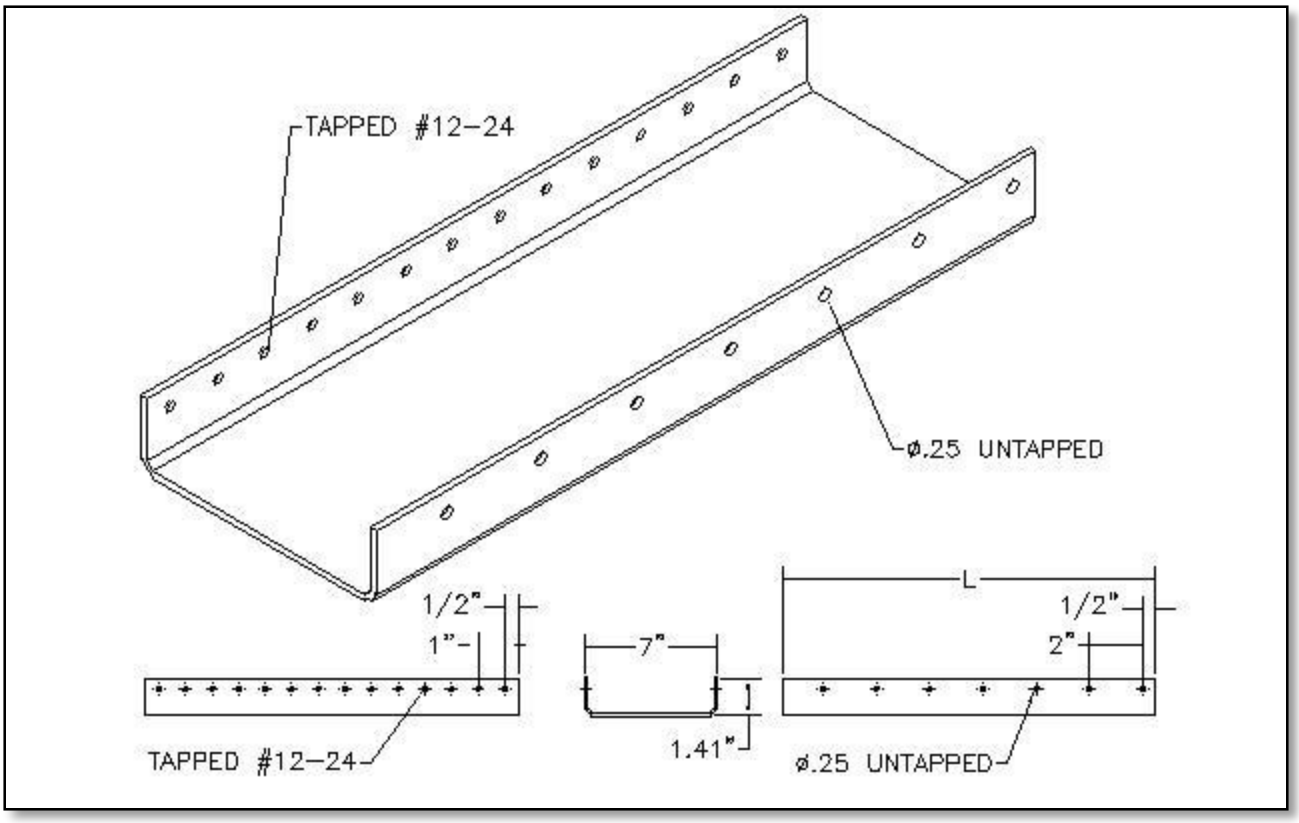

CSF#	RMU	L
RS8301XX	1	2"
RS8302XX	2	4"
RS8303XX	3	6"
RS8304XX	4	8"
RS8305XX	5	10"
RS8306XX	6	12"
RS8307XX	7	14"

NOTES:
FINISHES: SEE TECH DATA FOR PAINT CODES
KIT INCLUDES ALL MOUNTING HARDWARE

RVSD*1211

Specifications subject to change. Please contact CSF Customer Service for more information.

© copyright 2004 Central Steel Fabricators, Inc.
http://www.centralsteelfab.com ◆ 2100 Parkes Drive, Broadview, IL 60155
Phone: 708-652-2037 Fax: 708-652-7010

BASE BUMPER RAIL

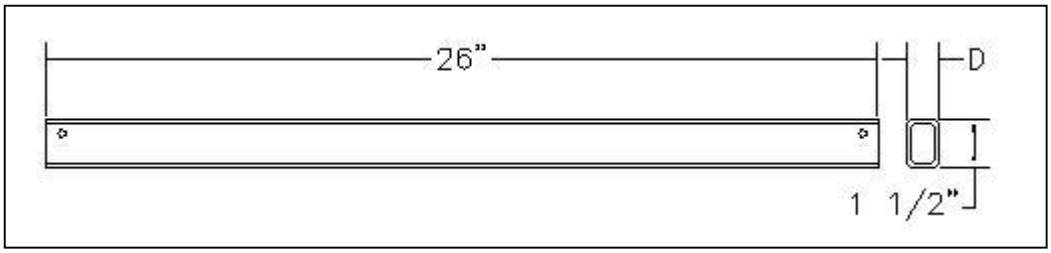

CSF#	D
BBR231XX	1"
BBR232XX	2"

NOTES:
-KIT INCLUDES ALL MOUNTING HARDWARE & BASE SUMPER RAIL
-OTHER SIZES AND FINISHES AVAILABLE UPON REQUEST
-FINISHES: SEE TECH DATA FOR PAINT CODES

Specifications subject to change. Please contact CSF Customer Service for more information.
© copyright 2004 Central Steel Fabricators, Inc.
http://www.centralsteelfab.com ◆ 2100 Parkes Drive, Broadview, IL 60155
Phone: 708-652-2037 Fax: 708-652-7010

BASE FILLER EXTENSION

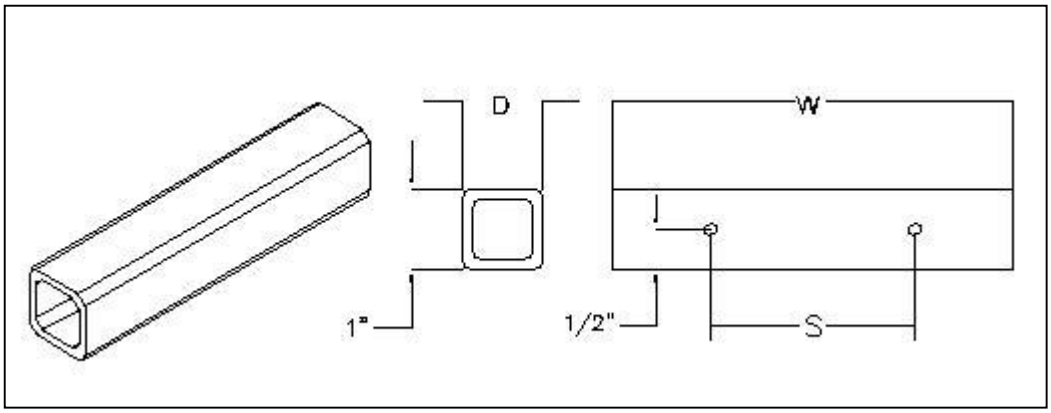

PART#	"D"	"W"	"S"
BFE101XX	1"	10"	5"
BFE102XX	2"	10"	5"
BFE103XX	3"	10"	5"
BFE201XX	1"	2.5"	1.63"
BFE202XX	2"	2.5"	1.63"
BFE203XX	3"	2.5"	1.63"
BFE501XX	1"	5"	2.56"
BFE502XX	2"	5"	2.56"
BFE503XX	3"	5"	2.56"

NOTES:

- KITS INCLUDES ALL MOUNTING HARDWARE AND BASE FILLER EXTENSION
- OTHER SIZES AND FINISHES AVAILABLE UPON REQUEST

Specifications subject to change. Please contact CSF Customer Service for more information.
© copyright 2004 Central Steel Fabricators, Inc.
http://www.centralsteelfab.com ◆ 2100 Parkes Drive, Broadview, IL 60155
Phone: 708-652-2037 Fax: 708-652-7010

UNEQUAL FLANGE BASE FILLER

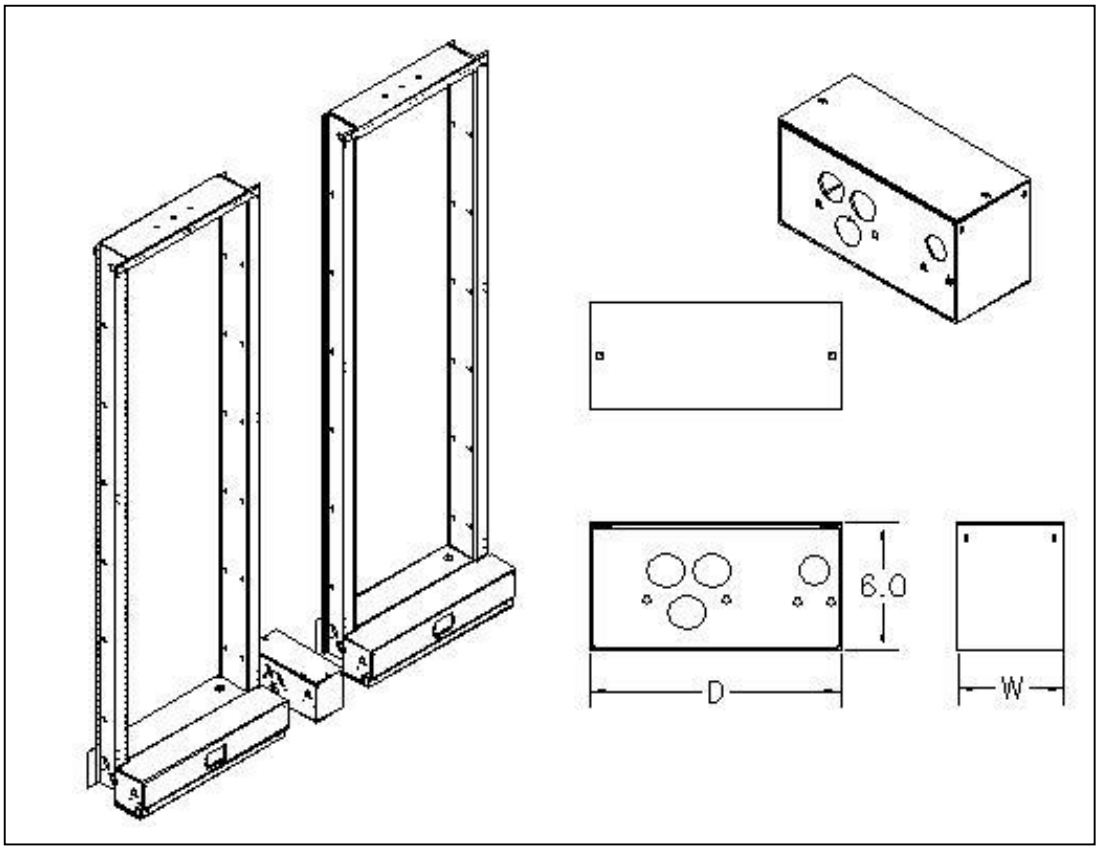

BASE FILLER WITH SIDES BFUWWDDXX		
PART#	"W"	"D"
BFU2510XX	2.50"	10.00"
BFU2512XX	2.50"	12.00"
BFU2515XX	2.50"	15.00"
BFU5010XX	5.00"	10.00"
BFU5012XX	5.00"	12.00"
BFU5015XX	5.00"	15.00"
BFU7512XX	7.50"	12.00"
BFU7515XX	7.50"	15.00"
BFU1012XX	10.00"	12.00"
BFU1015XX	10.00"	15.00"

BASE FILLER NO SIDES BFOWWDDXX		
PART#	"W"	"D"
BFO2510XX	2.50"	10.00"
BFO2512XX	2.50"	12.00"
BFO2515XX	2.50"	15.00"
BFO5010XX	5.00"	10.00"
BFO5012XX	5.00"	12.00"
BFO5015XX	5.00"	15.00"
BFO7512XX	7.50"	12.00"
BFO7515XX	7.50"	15.00"
BFO1012XX	10.00"	12.00"
BFO1015XX	10.00"	15.00"

NOTES:

-KIT INCLUDES ALL MOUNTING HARDWARE, COVER, AND BASE FILLER UNIT

-IF NO FILLER PANEL IS USED ADD A “K” TO THE END OF THE PART NUMBERS ABOVE TO RECEIVE TIE PLATES.

-OTHER SIZES AVAILABLE UPON REQUEST

Specifications subject to change. Please contact CSF Customer Service for more information.

© copyright 2004 Central Steel Fabricators, Inc.

http://www.centralsteelfab.com ◆ 2100 Parkes Drive, Broadview, IL 60155
Phone: 708-652-2037 Fax: 708-652-7010

BASE BUMPER RAIL BASE FILLER RU

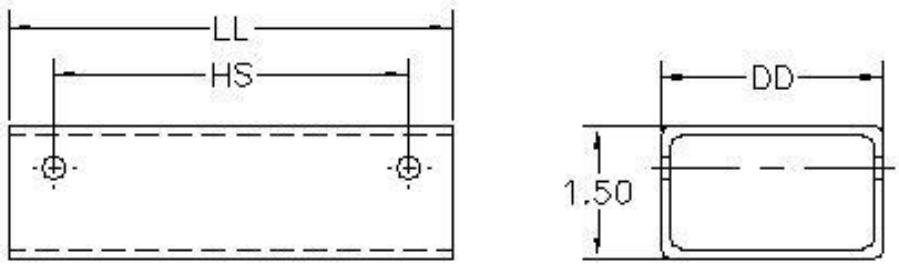

CSF#	LL	DD	HS
BBR021XX	2.50"	1.00"	1.50"
BBR051XX	5.00"	1.00"	4.00"
BBR052XX	5.00"	2.00"	4.00"
BBR0525XX	5.00"	2.5 "	4.00"
BBR0530XX	5.00"	3.00"	4.00"
BBR1025XX	10.00"	2.50"	9.00"

NOTES:

-KIT INCLUDES ALL MOUNTING HARDWARE & BASE BUMPER RAIL

-FINISHES: SEE TECH DATA FOR PAINT CODES

-OTHER SIZES AND FINISHES AVAILABLE UPON REQUEST

RVSD*1010

Specifications subject to change. Please contact CSF Customer Service for more information.

© copyright 2004 Central Steel Fabricators, Inc.
http://www.centralsteelfab.com ◆ 2100 Parkes Drive, Broadview, IL 60155
Phone: 708-652-2037 Fax: 708-652-7010

NETWORK BAY BASE FILLER

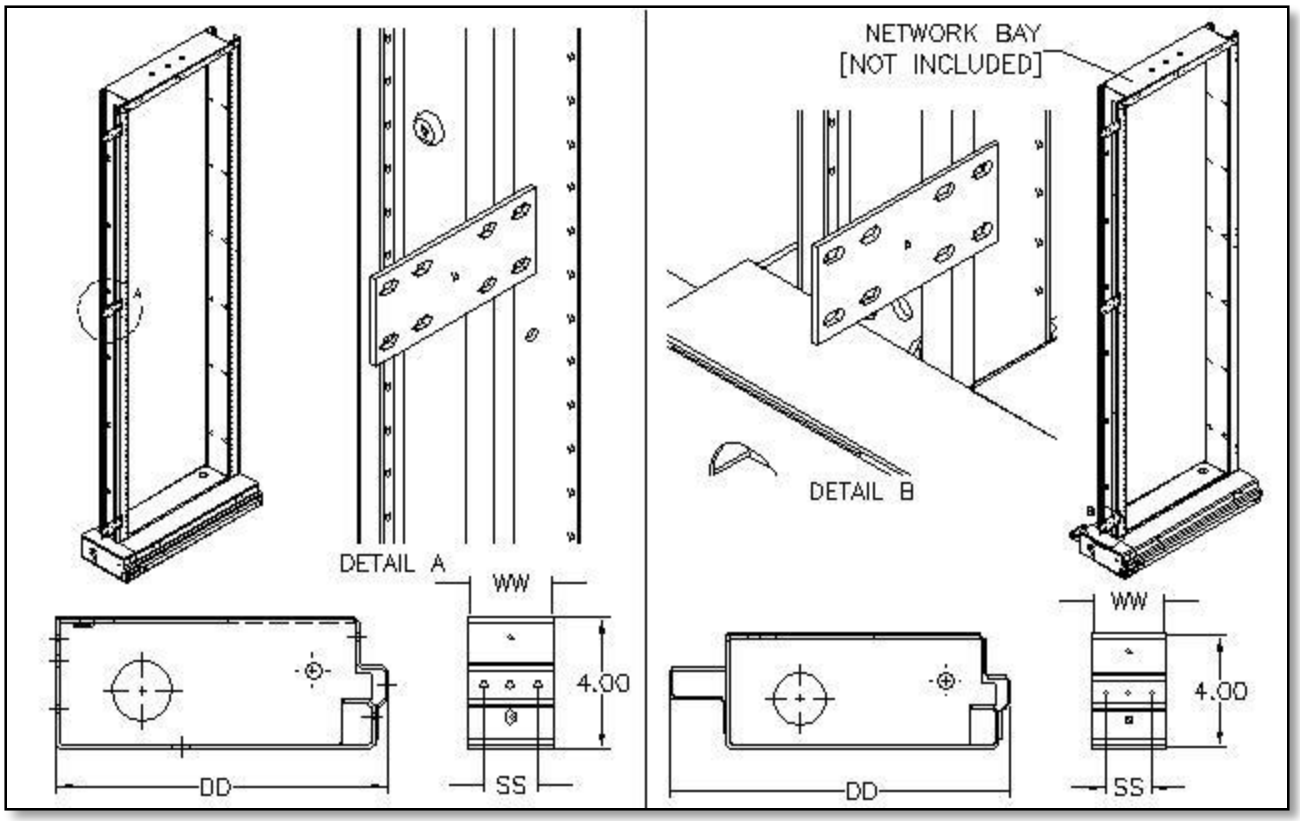

PART#	"WW"	“DD"	“SS"
BFN100XX	10.00"	10.00"	5.00"
BFN250XX	2.50"	10.00"	1.63"
BFN500XX	5.00"	10.00"	2.56"

PART#	"WW"	“DD"	“SS"
BFN102XX	10.00"	12.00"	5.00"
BFN252XX	2.50"	12.00"	1.63"
BFN502XX	5.00"	12.00"	2.56"

NOTES:

-KIT INCLUDES ALL MOUNTING HARDWARE AND BASE FILLER

-OTHER SIZES AND FINISHES AVAILABLE UPON REQUEST

RVSD*0112

Specifications subject to change. Please contact CSF Customer Service for more information.

© copyright 2004 Central Steel Fabricators, Inc.
http://www.centralsteelfab.com ◆ 2100 Parkes Drive, Broadview, IL 60155
Phone: 708-652-2037 Fax: 708-652-7010

Cable Section Framework Series

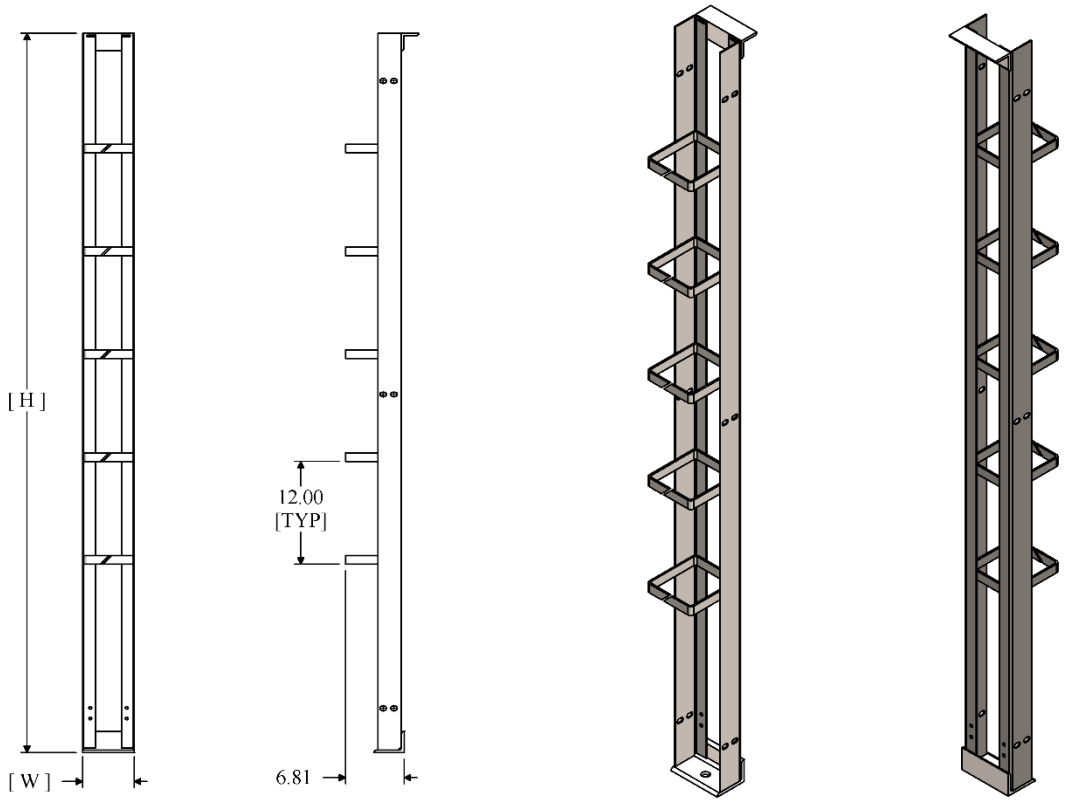

Cable Section Framework Series			
CSF#	[W]	[H]	Description
CS425xx	4.00	84.00	Cable Section Framework – 4.00” x 84.00”
CS4901xx	6.00	84.00	Cable Section Framework – 6.00” x 84.00”
CS4902xx	6.00	90.00	Cable Section Framework – 6.00” x 90.00”

Notes:

- Other sizes and finishes available upon request.
- Finish Code: See Tech Data for paint codes
- Kit Includes all hardware for specified sizes and cabling section.

RVSD*0917

Specifications subject to change. Please contact CSF Customer Service for more information.

© copyright 2004 Central Steel Fabricators, Inc.
http://www.centralsteelfab.com ◆ 2100 Parkes Drive, Broadview, IL 60155
Phone: 708-652-2037 Fax: 708-652-7010

CS4901XXK – Cable Section Framework w/ Cover + Hardware Assembly Kit

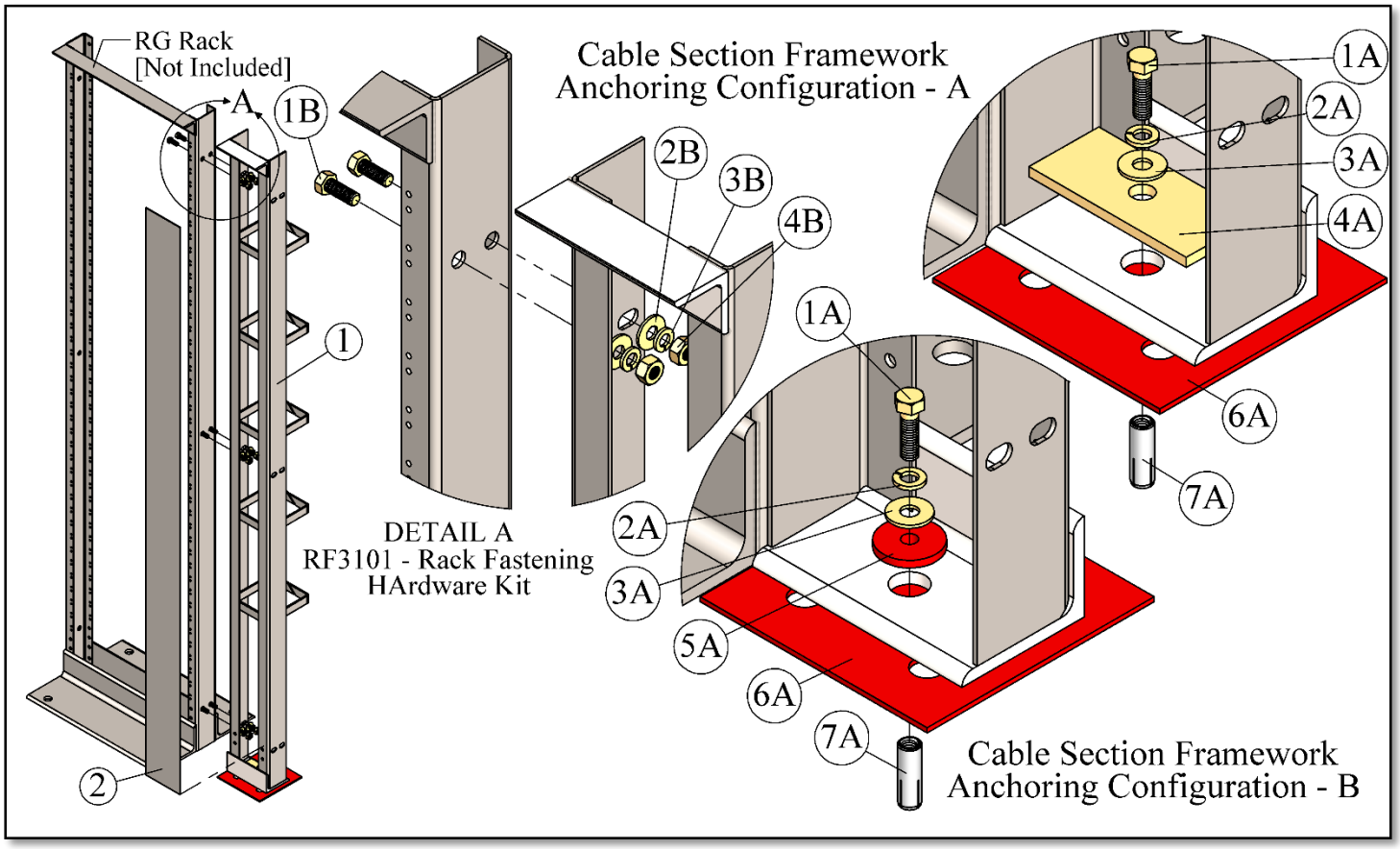

CS4901 - Cable Section Framework w/ Cover			
Item	CSF#	QTY	Description
1	CS25	1	Cable Section Framework – 6.00” x 84.00”
2	CSC25	1	Cable Section Framework Cover - 84.00”

Cable Section Framework Hardware Kit			
Item	CSF#	QTY	Description
1A	HH1006	1	3/8-16 HHCS x 1.25”
2A	LW156	1	3/8” Spring Lock Washer
3A	FW166	1	3/8” Flat Washer
4A	HDP2450	1	Hold Down Plate
5A	IB6202	1	Insulation Bushing for 3/8” Hex Bolt
6A	IP7068	1	Insulation Pad – 6.50” x 6.50”
7A	DIA37	1	3/8-16 Drop In Anchor

RF3101 – Rack Fastening Hardware			
Item	CSF#	QTY	Description
1B	HH1005	6	3/8-16 HHCS x 1.00”
2B	FW166	6	3/8” Flat Washer
3B	LW156	6	3/8” Spring Lock Washer
4B	HN146	6	3/8-16 Hex Nut

© copyright 2004 Central Steel Fabricators, Inc.
http://www.centralsteelfab.com ◆ 2100 Parkes Drive, Broadview, IL 60155
Phone: 708-652-2037 Fax: 708-652-7010

CABLE TIE BAR

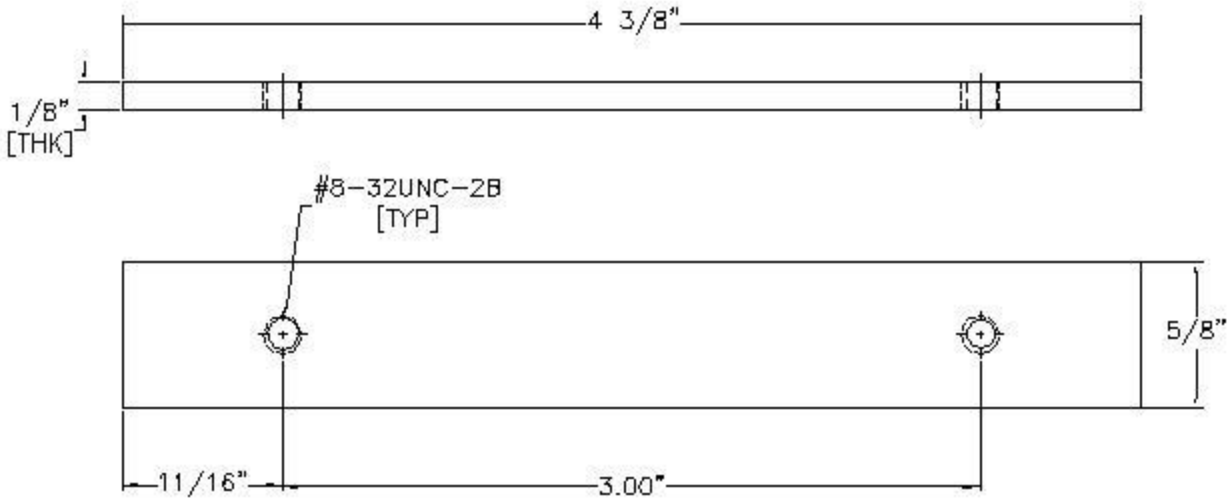

CSF#	QTY	TYPE	LENGTH
CTB1901	12	B	4 3/8"
CTB1902	14	B	4 3/8"
CTB1903	16	B	4 3/8"
CTB1904	20	B	4 3/8"

NOTES:
-FINISHES: ZINC AND YELLOW
-OTHER SIZES AND FINISHES AVAILABLE UPON REQUEST
-KIT INCLUDES ALL MOUNTING HARDWARE AND CABLE TIE BAR

Specifications subject to change. Please contact CSF Customer Service for more information.
© copyright 2004 Central Steel Fabricators, Inc.
http://www.centralsteelfab.com ◆ 2100 Parkes Drive, Broadview, IL 60155
Phone: 708-652-2037 Fax: 708-652-7010

CABLE RING TIE BAR

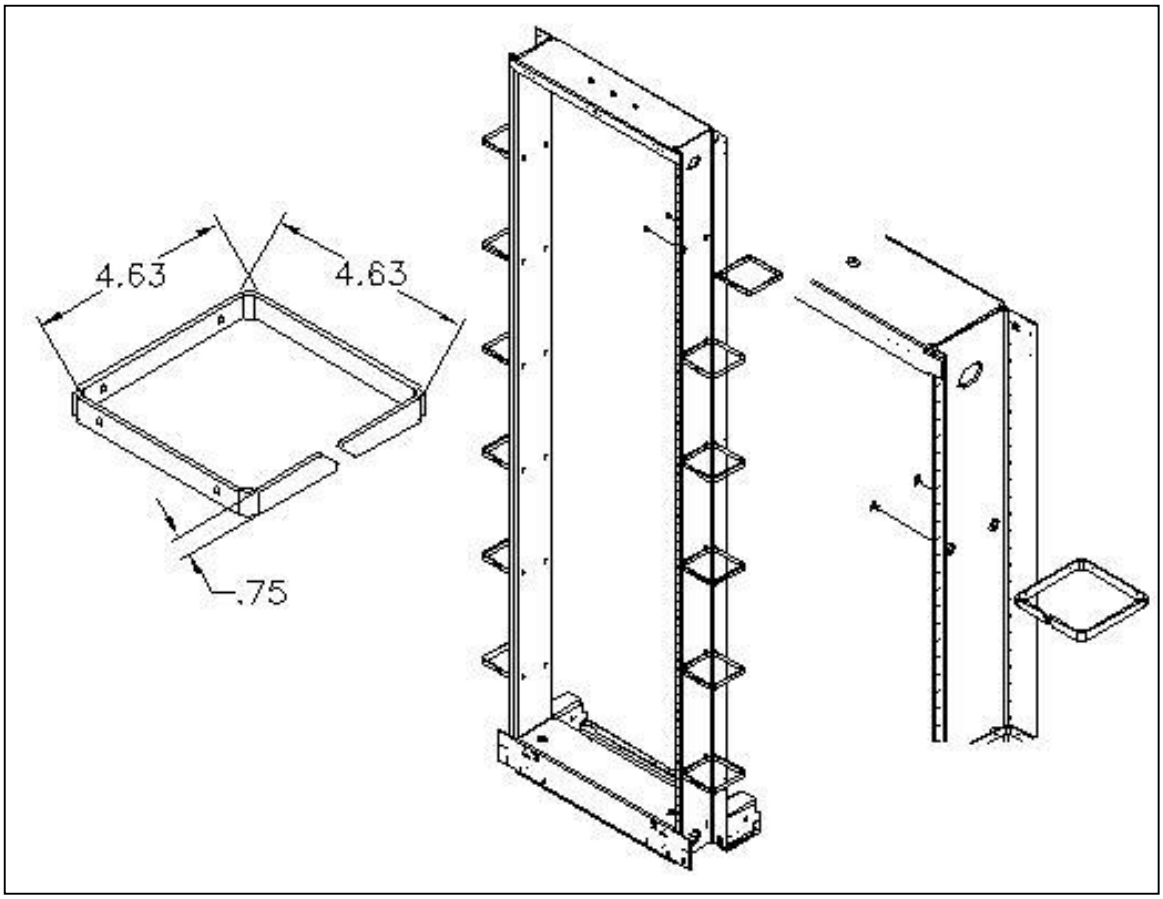

CSF#	QTY OF RINGS
CR4646XX	1
CR4646XXK06	6
CR4646XXK12	12

NOTES:
-KIT INCLUDES ALL MOUNTING HARDWARE

RVSD*1211

Specifications subject to change. Please contact CSF Customer Service for more information.

© copyright 2004 Central Steel Fabricators, Inc.
http://www.centralsteelfab.com ◆ 2100 Parkes Drive, Broadview, IL 60155 ◆
Phone: 708-652-2037 Fax: 708-652-7010

DESIGNATION CARD HOLDER

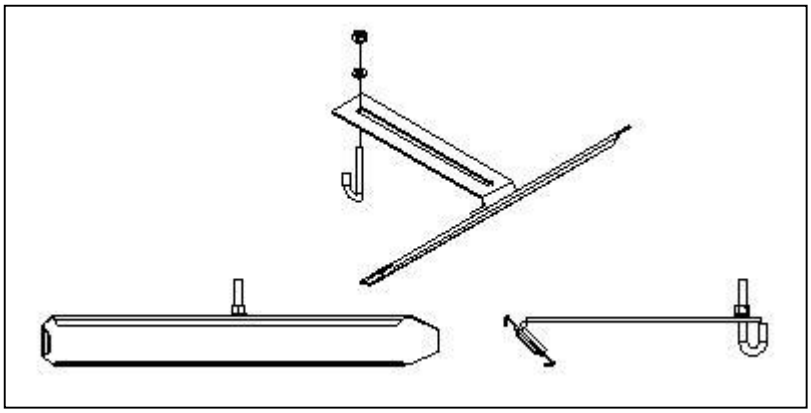

CSF#
DCH99XX

NOTES:
-FINISHES: SEE TECH DATA FOR PAINT CODES

Specifications subject to change. Please contact CSF Customer Service for more information.
© copyright 2004 Central Steel Fabricators, Inc.
http://www.centralsteelfab.com ◆ 2100 Parkes Drive, Broadview, IL 60155
Phone: 708-652-2037 Fax: 708-652-7010

DPK02 - DUPLEX POWER KIT RU – GUARD BOX

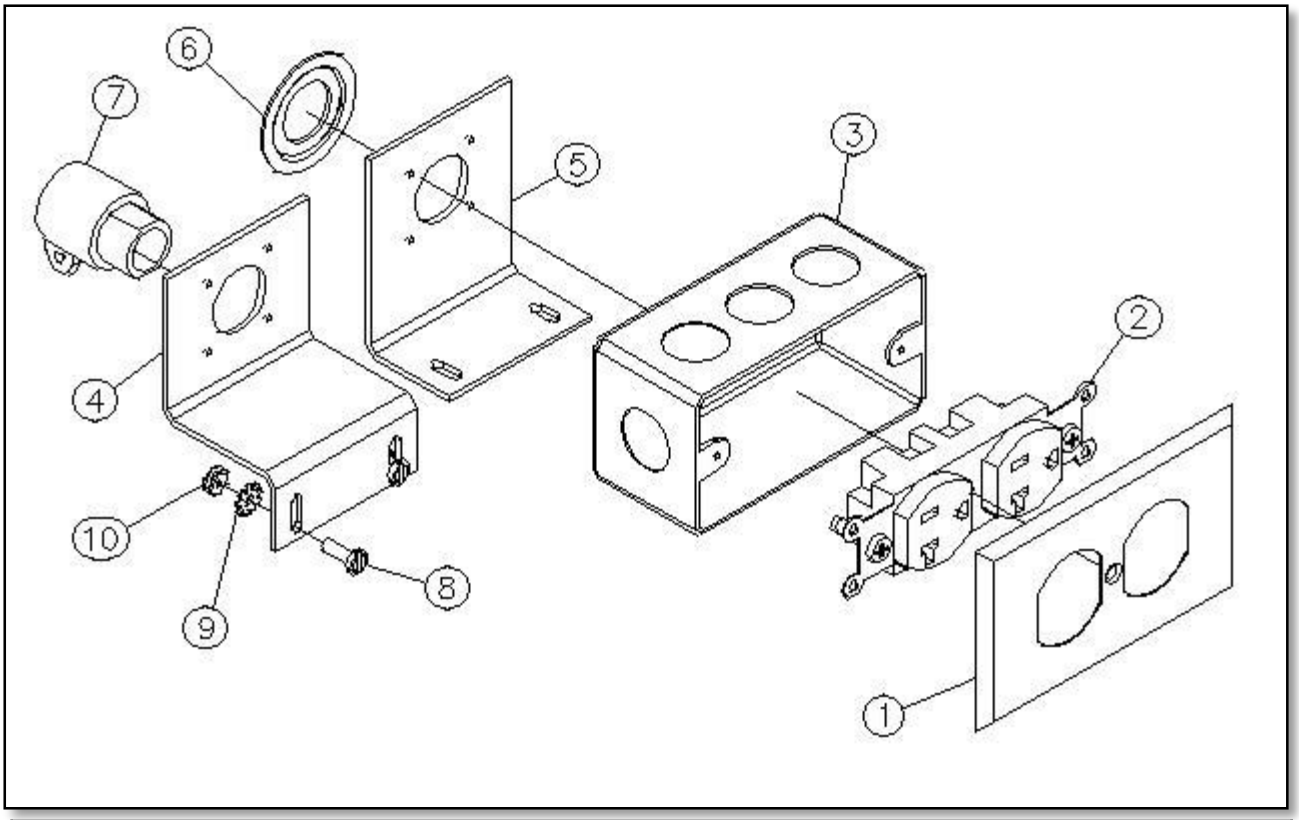

DPK02 – DUPLEX POWER KIT RU – GUARD BOX			
ITEM	QTY	PART #	DESCRIPTION
1	1	SDC01	SINGLE DUPLEX COVER
2	1	CRB5362	DUPLEX RECPT BROWN 20A 125 VOLTS
3	1	660RACO	ELECTRICAL HANDY BOX RACO #660 SINGLE
4	1	DMB05ZY	DUPLEX MOUNTING BRACKET/ REAR GRDRL “Z” ZY
5	1	DMB02ZY	DUPLEX MOUNTING BRACKET/ GUARD BOX “L” ZY
6	4	RW100-50	REDUCING WASHER 1.00” TO .50”
7	2	NWC50	NON-METALIC WIRE CONNECTOR .50”
8	6	PH0206	#8-32 X 1/2” PAN HEAD M/S ZY
9	2	LWE151	#8-32 EXTERNAL TOOTH LOCKWASHER ZY
10	2	HN141	#8-32 HEX NUT ZY

NOTES:
-FINISHES: SEE TECH DATA FOR PAINT CODES
-OTHER FINISHES AVAILABLE UPON REQUEST

RVSD*0514

Specifications subject to change. Please contact CSF Customer Service for more information.

© copyright 2004 Central Steel Fabricators, Inc.
http://www.centralsteelfab.com ◆ 2100 Parkes Drive, Broadview, IL 60155
Phone: 708-652-2037 Fax: 708-652-7010

DPK03 - DUPLEX POWER KIT RU [PAIR]

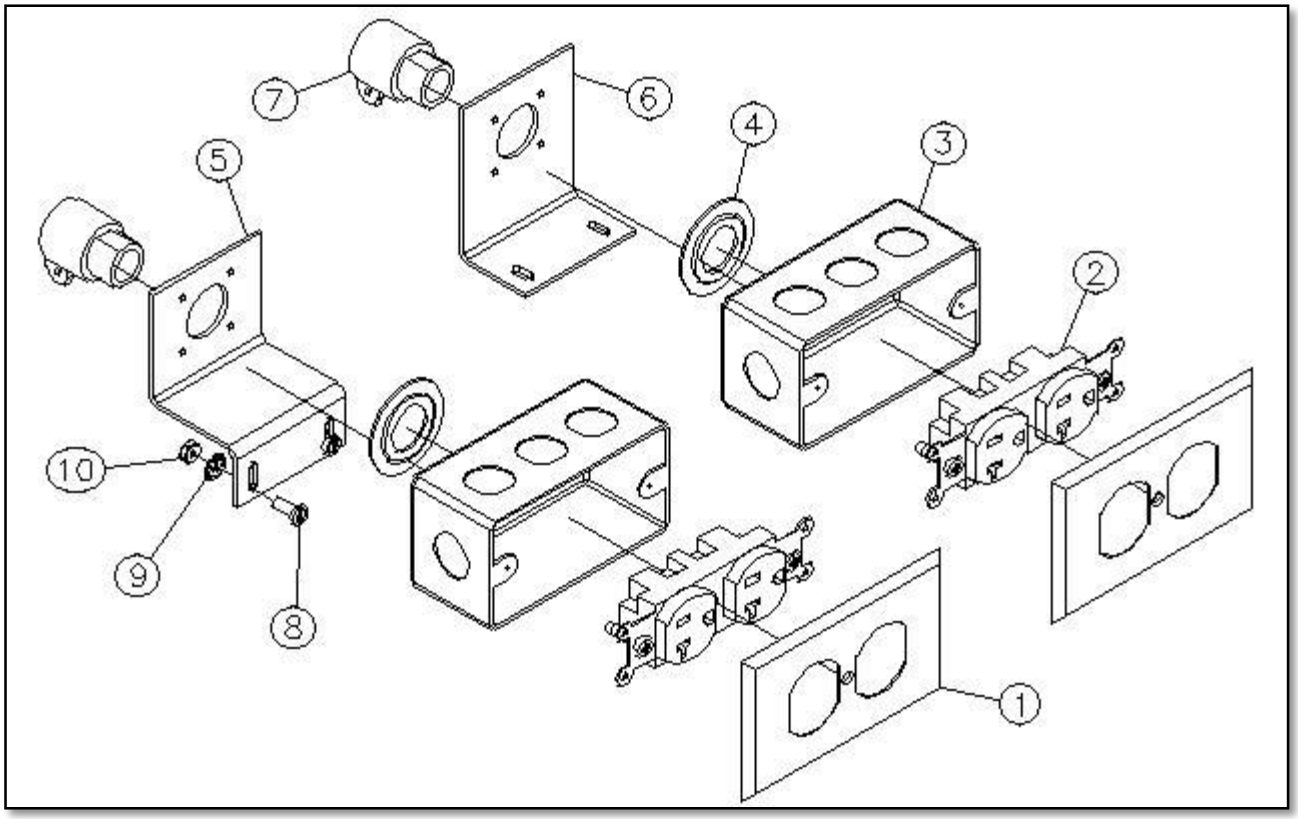

DPK03 – DUPLEX POWER KIT RU [PAIR]			
ITEM	QTY	PART #	DESCRIPTION
1	2	SDC01	SINGLE DUPLEX COVER
2	2	CRB5362	DUPLEX RECPT BROWN 20A 125 VOLTS
3	2	660RACO	ELECTRICAL HANDY BOX RACO #660 SINGLE
4	8	RW100-50	REDUCING WASHER 1.00” TO .50”
5	1	DMB05ZY	DUPLEX MOUNTING BRACKET/ REAR GRDRL “Z” ZY
6	1	DMB02ZY	DUPLEX MOUNTING BRACKET/ GUARD BOX “L” ZY
7	4	NWC50	NON-METALIC WIRE CONNECTOR .50”
8	12	PH0206	#8-32 X ½” PAN HEAD M/S ZY
9	4	LWE151	#8-32 EXTERNAL TOOTH LOCKWASHER ZY
10	2	HN141	#8-32 HEX NUT ZY

NOTES:
-FINISHES: SEE TECH DATA FOR PAINT CODES
-OTHER FINISHES AVAILABLE UPON REQUEST

RVSD*0514

Specifications subject to change. Please contact CSF Customer Service for more information.

© copyright 2004 Central Steel Fabricators, Inc.
http://www.centralsteelfab.com ◆ 2100 Parkes Drive, Broadview, IL 60155
Phone: 708-652-2037 Fax: 708-652-7010

ECONOMY RACK

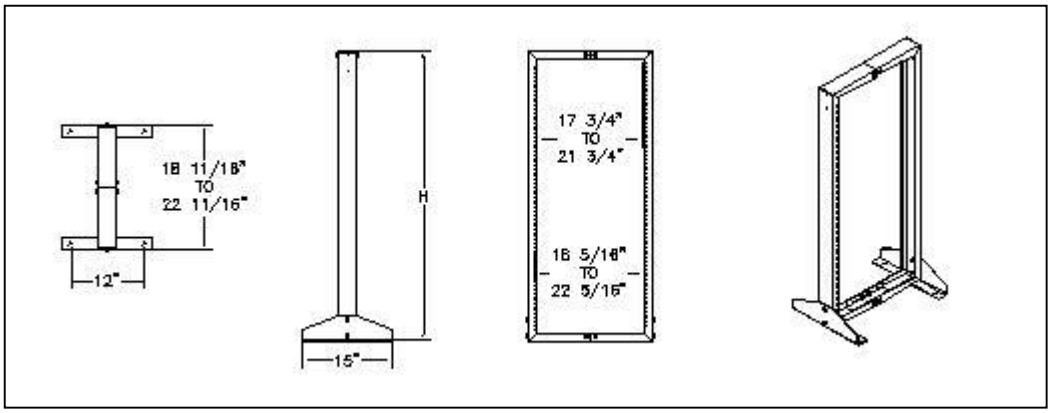

CSF#	H
RE0710XX	48"
RE0720XX	72"

NOTES:
-FINISHES: SEE TECH DATA FOR PAINT CODES
-OTHER SIZES AND FINISHES AVAILABLE UPON REQUEST
-KIT INCLUDES ALL HARDWARE FOR SPECIFIED SAIZES AND ECONOMY RACK

Specifications subject to change. Please contact CSF Customer Service for more information.
© copyright 2004 Central Steel Fabricators, Inc.
http://www.centralsteelfab.com ◆ 2100 Parkes Drive, Broadview, IL 60155
Phone: 708-652-2037 Fax: 708-652-7010

ECONOMY RACK

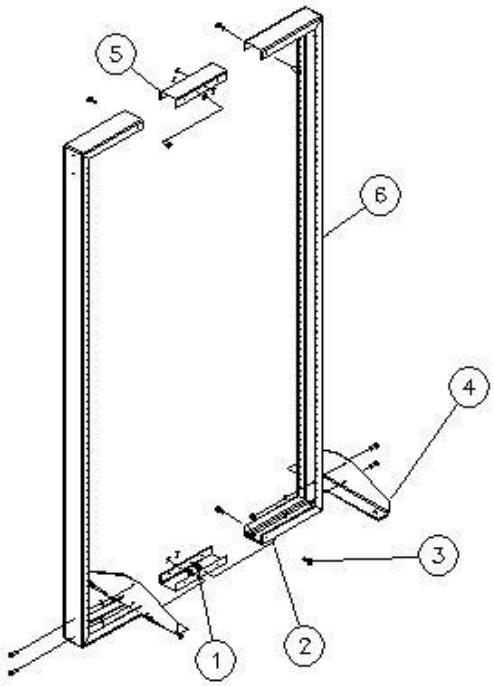

ITEM	QTY	PART #	DESCRIPTION
1	12	HN145 HEXAGON NUT – 5/16”	HEXAGON NUT
2	12	LW155 HELICAL LOCK WASHER – 5/16”	HELICAL SPRING LOCK WASHER
3	12	HH0805 HEAVY HEX BOLT – 5/16” X 1”	HEAVY HEX BOLTS
4	2	REOFB 1	FOOTBASE, ECONOMY RACK
5	2	REOX 1	SPLICE, CONNECTING, ECONO RACK
6	2	REU9XX	RACK, 3” FORMED, ECONOMY RACK, 72” / 48” (1” SPC) #12-24UNC-2B (TAPPED)

NOTES:
-FINISHES: SEE TECH DATA FOR PAINT CODES
-OTHER SIZES AND FINISHES AVAILABLE UPON REQUEST
-KIT INCLUDES ALL HARDWARE FOR SPECIFIED SAIZES AND ECONOMY RACK

Specifications subject to change. Please contact CSF Customer Service for more information.
© copyright 2004 Central Steel Fabricators, Inc.
http://www.centralsteelfab.com ◆ 2100 Parkes Drive, Broadview, IL 60155
Phone: 708-652-2037 Fax: 708-652-7010

ENCLOSED END GUARD

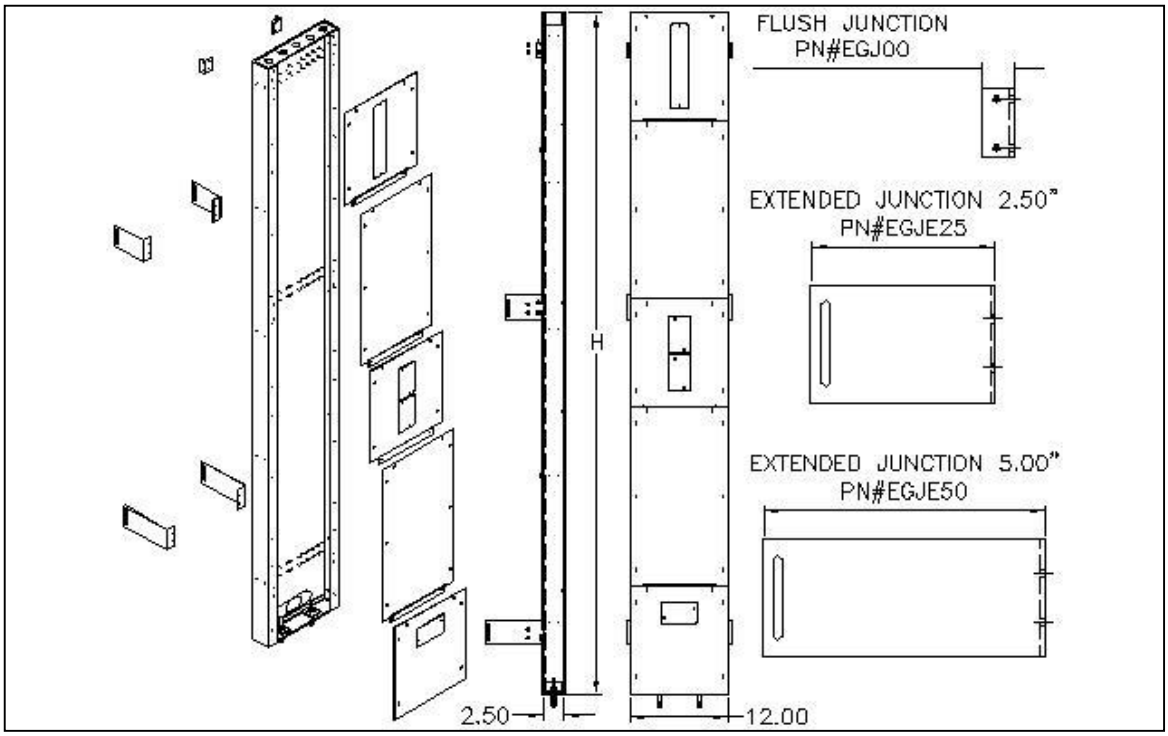

CSF#	HEIGHT
EGA1225XX	7’-0”

NOTES:
-FINISHES: SEE TECH DATA FOR PAINT CODES
-KIT INCLUDES ALL [3X] MOUNTING HARDWARE, PANELS AND END GUARD

Specifications subject to change. Please contact CSF Customer Service for more information.
© copyright 2004 Central Steel Fabricators, Inc.
http://www.centralsteelfab.com ◆ 2100 Parkes Drive, Broadview, IL 60155
Phone: 708-652-2037 Fax: 708-652-7010

EGAXX25 15” TO 24” COMPARTMENTALIZED END GUARD

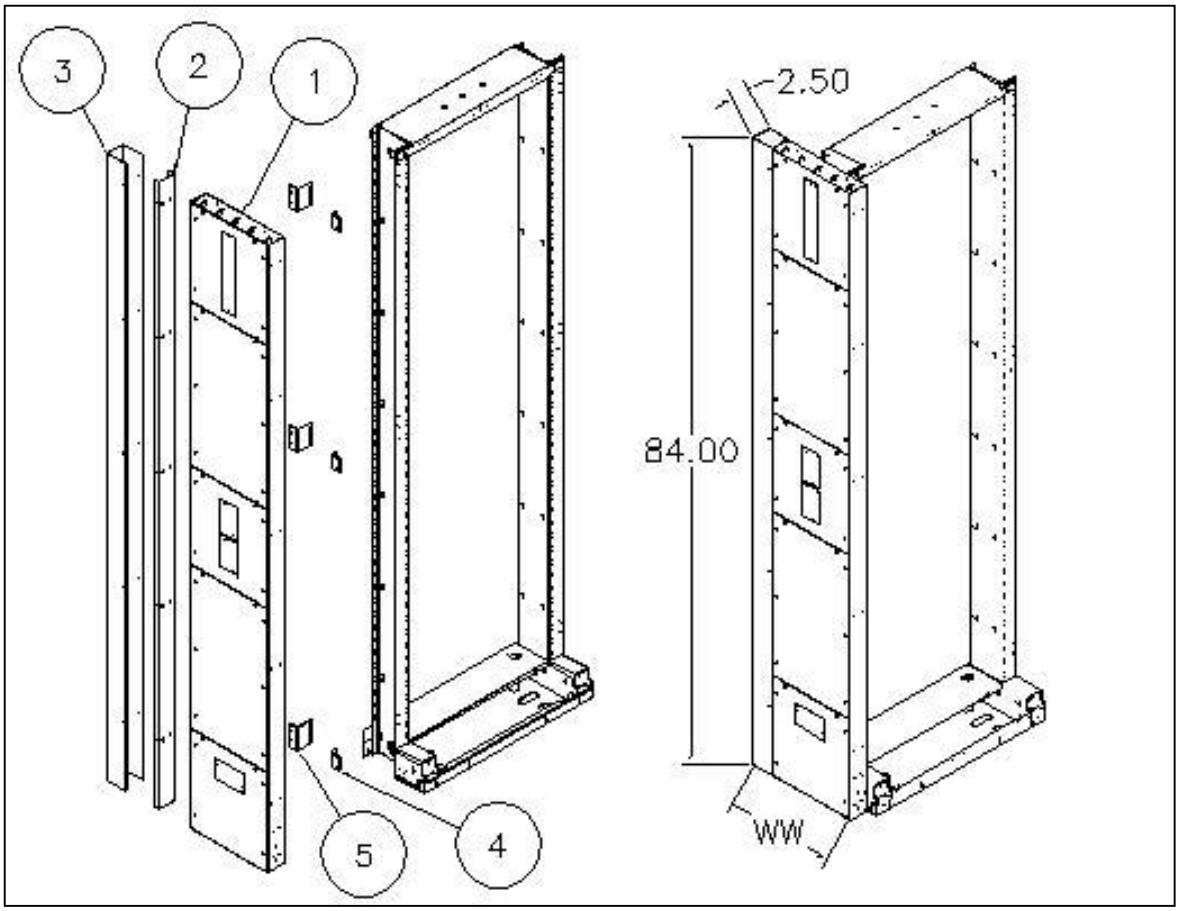

ITEM #	CSF#	EGA1525XX WW=15.00”	EGA1825XX WW=18.00”	EGA2125XX WW=21.00”	EGA2425XX WW=24.00”
1	EGA1225	1	1	1	1
2	EGEMB84	1	2	3	4
3	EGE0384	1	2	3	4
4	EGJ00	3	3	3	3
5	EGJEXX	3	3	3	3

NOTES:
-OTHER FINISHES AND SIZES AVAILABLE UPON REQUEST
-FINISHES: SEE TECH DATA FOR PAINT CODES
-KIT INCLUDES ALL MOUNTING HARDWARE, PANELS, AND END GUARD
-RELAY RACK NOT INCLUDED
-END GUARD WIDENER CAN BE PURCHASED SEPARATELY

Specifications subject to change. Please contact CSF Customer Service for more information.
© copyright 2004 Central Steel Fabricators, Inc.
http://www.centralsteelfab.com ◆ 2100 Parkes Drive, Broadview, IL 60155
Phone: 708-652-2037 Fax: 708-652-7010

EGXXXX – END GUARD KIT

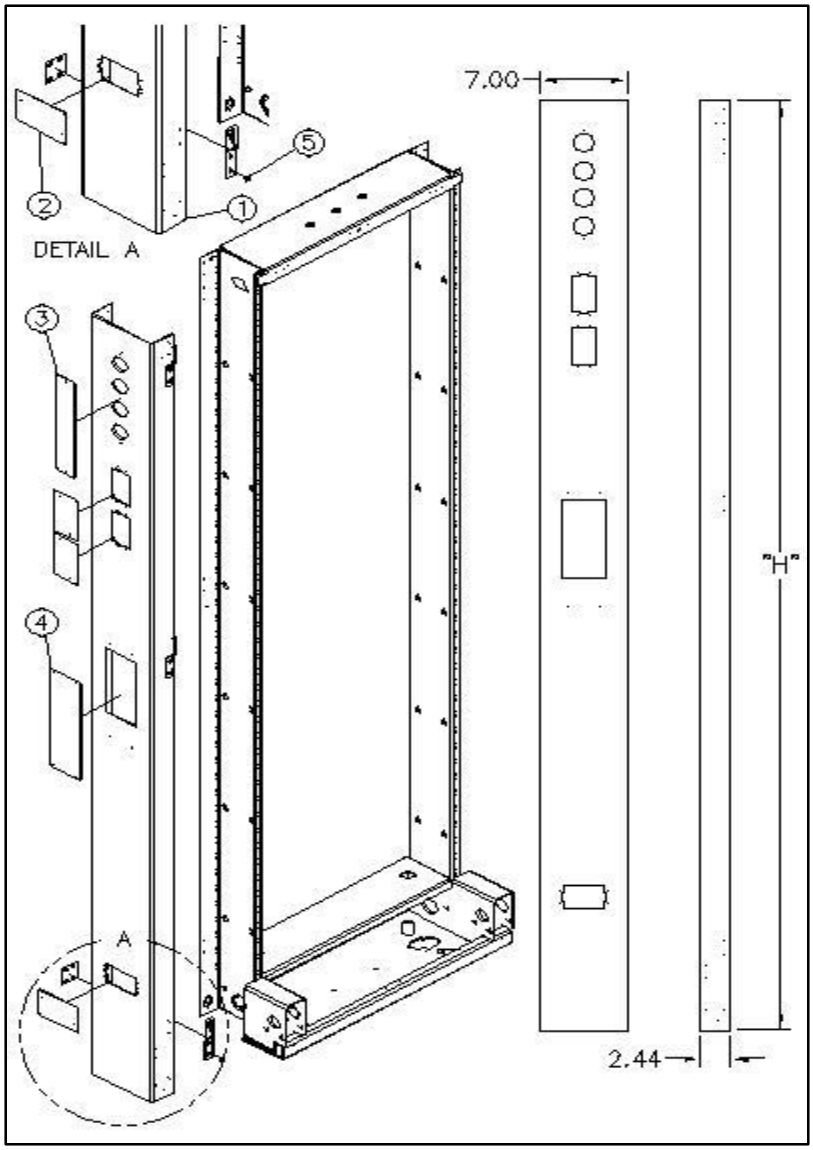

CSF#	H
EG25XX	7‘-0”
EG30XX	8‘-0”
EG35XX	9‘-0”
EG47XX	11' -6"

NOTES:

-KIT INCLUDES ALL MOUNTING HARDWARE & END GUARDS

EGXXXX – END GUARD NETWORK BAY			
ITEM	QTY	PART #	DESCRIPTION
1	1	EGXXXX	END GUARD
2	3	EGC06	2.75” X 4.50” EG PLATE
3	1	P186701M	2.13” X 10.50” EG PLATE NO KNOCKOUT
4	1	P186702	3.50” X 10.75” EG PLATE
5	12	PH0400FST	12-24 X 1/4” PH PHIL CUTTING ZY
6	1	EG KIT	END GUARD HARDWARE KIT [NOT SHOWN]

Specifications subject to change. Please contact CSF Customer Service for more information.
© copyright 2004 Central Steel Fabricators, Inc.
http://www.centralsteelfab.com ◆ 2100 Parkes Drive, Broadview, IL 60155
Phone: 708-652-2037 Fax: 708-652-7010

END GUARD SHIELD KIT

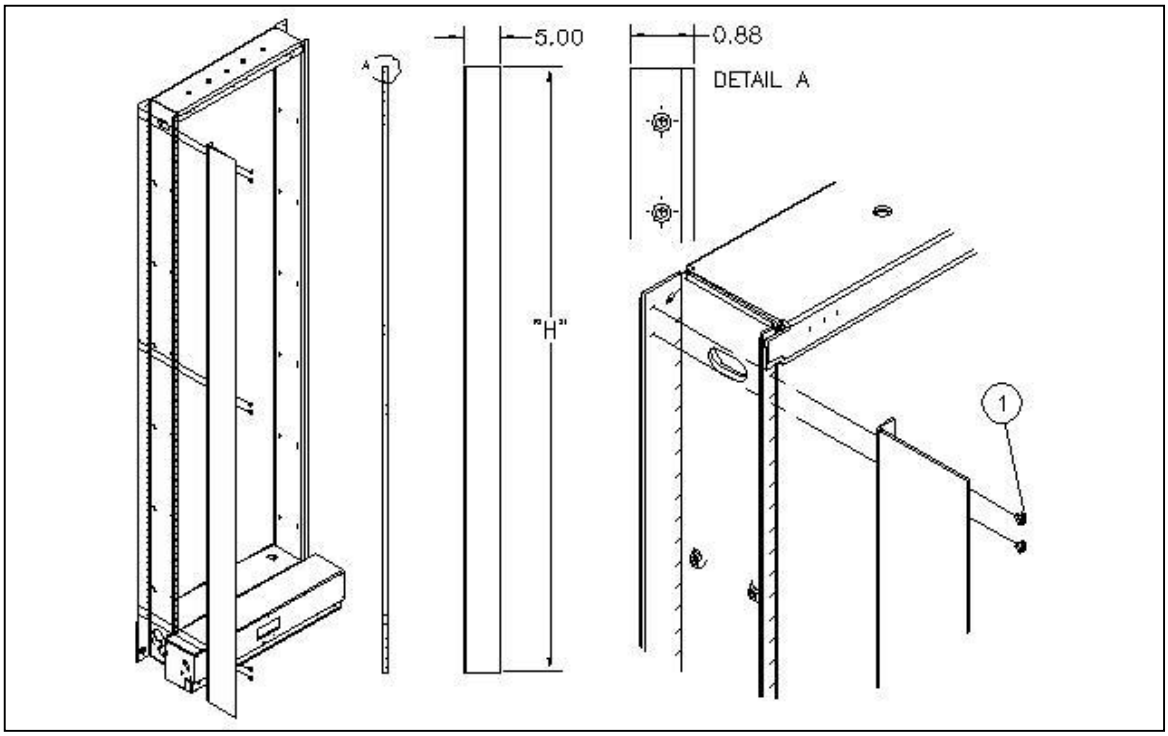

CSF#	H
EGS25XX	7'
EGS35XX	9'
EGS47XX	11'-6"

EGS HARDWARE		
ITEM#	CSF#	DESCRIPTION
1	PH0400FST	12-24 X 1/4" PH PHIL

NOTES:
-KIT INCLUDES ALL MOUNTING HARDWARE & END GUARD SHIELD.
-EGSXX SERIES - END SHIELD FOR USE ON STANDARD DUTY RU & RN BAYS.
-SEE ESEXX SERIES FOR RUE & RNE HEAVY DUTY SEISMIC BAYS.
-EGS CAN BE INSTALL EITHER ON RIGHT OR LEFT SIDE.

Specifications subject to change. Please contact CSF Customer Service for more information.
© copyright 2004 Central Steel Fabricators, Inc.
http://www.centralsteelfab.com ◆ 2100 Parkes Drive, Broadview, IL 60155
Phone: 708-652-2037 Fax: 708-652-7010

END GUARD SHIELD [EGS25XX] KIT

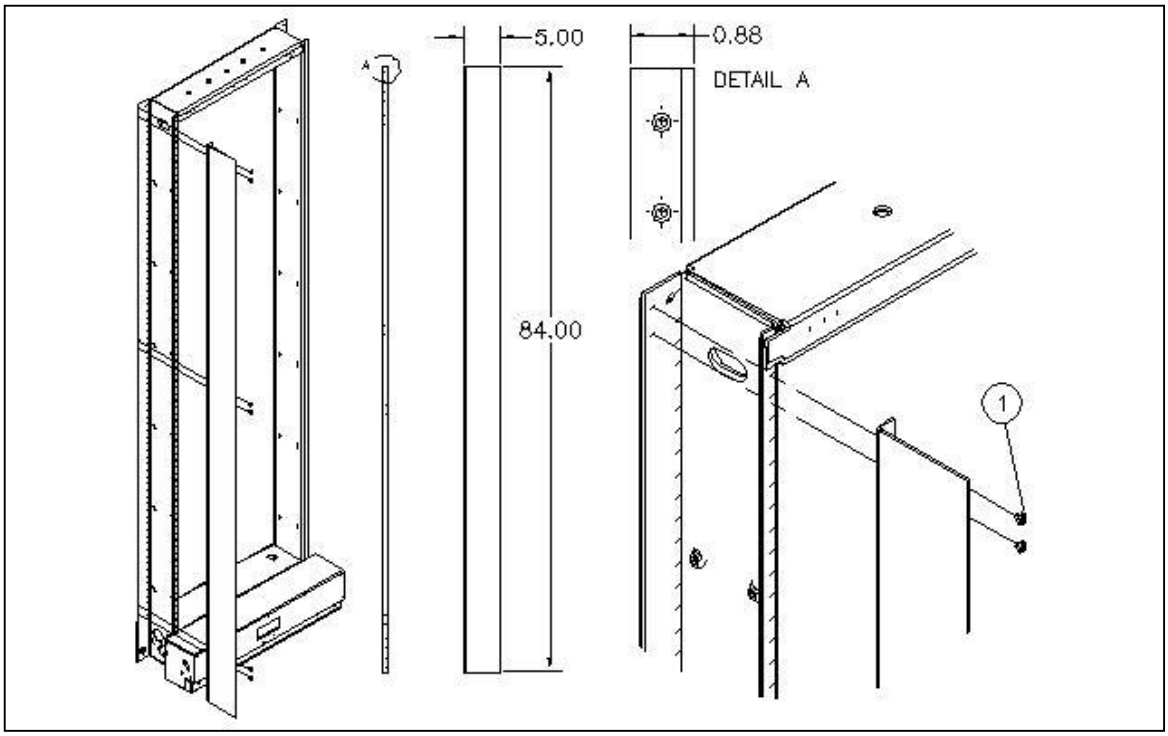

CSF#	H
EGS25XX	7‘-0”

EGS HARDWARE			
ITEM#	QTY#	CSF#	DESCRIPTION
1	6	PH0400FST	12-24 X 1/4” PH PHIL

NOTES:
-KIT INCLUDES ALL MOUNTING HARDWARE & END GUARD SHIELD.
-EGSXX SERIES - END SHIELD FOR USE ON STANDARD DUTY RU & RN BAYS.
-SEE ESEXX SERIES FOR RUE & RNE HEAVY DUTY SEISMIC BAYS.
-EGS CAN BE INSTALL EITHER ON RIGHT OR LEFT SIDE.

Specifications subject to change. Please contact CSF Customer Service for more information.
© copyright 2004 Central Steel Fabricators, Inc.
http://www.centralsteelfab.com ◆ 2100 Parkes Drive, Broadview, IL 60155
Phone: 708-652-2037 Fax: 708-652-7010

END GUARD SHIELD [EGS35XX] KIT

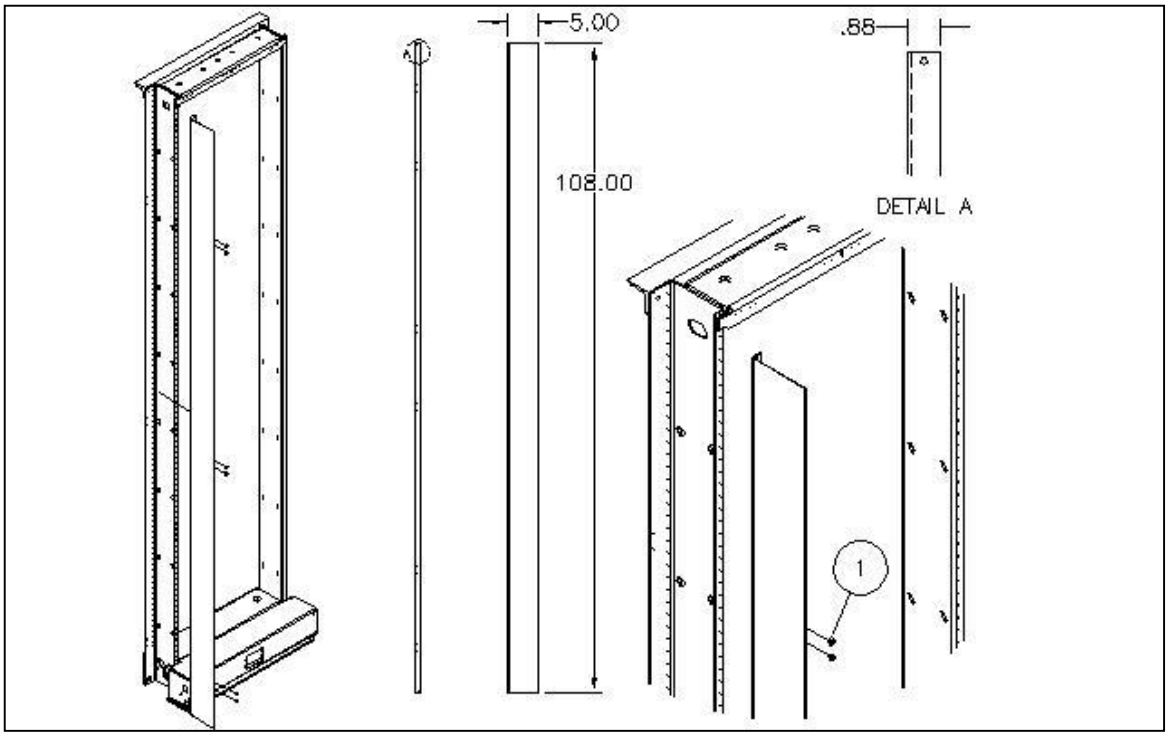

CSF#	H
EGS35XX	9'

EGS HARDWARE			
ITEM#	QTY#	CSF#	DESCRIPTION
1	6	PH0400FST	12-24 X 1/4” PH PHIL

NOTES:
-KIT INCLUDES ALL MOUNTING HARDWARE & END GUARD SHIELD.
-EGSXX SERIES - END SHIELD FOR USE ON STANDARD DUTY RU & RN BAYS.
-SEE ESEXX SERIES FOR RUE & RNE HEAVY DUTY SEISMIC BAYS.
-EGS CAN BE INSTALL EITHER ON RIGHT OR LEFT SIDE.

Specifications subject to change. Please contact CSF Customer Service for more information.
© copyright 2004 Central Steel Fabricators, Inc.
http://www.centralsteelfab.com ◆ 2100 Parkes Drive, Broadview, IL 60155
Phone: 708-652-2037 Fax: 708-652-7010

END GUARD SHIELD [EGS47XX] KIT

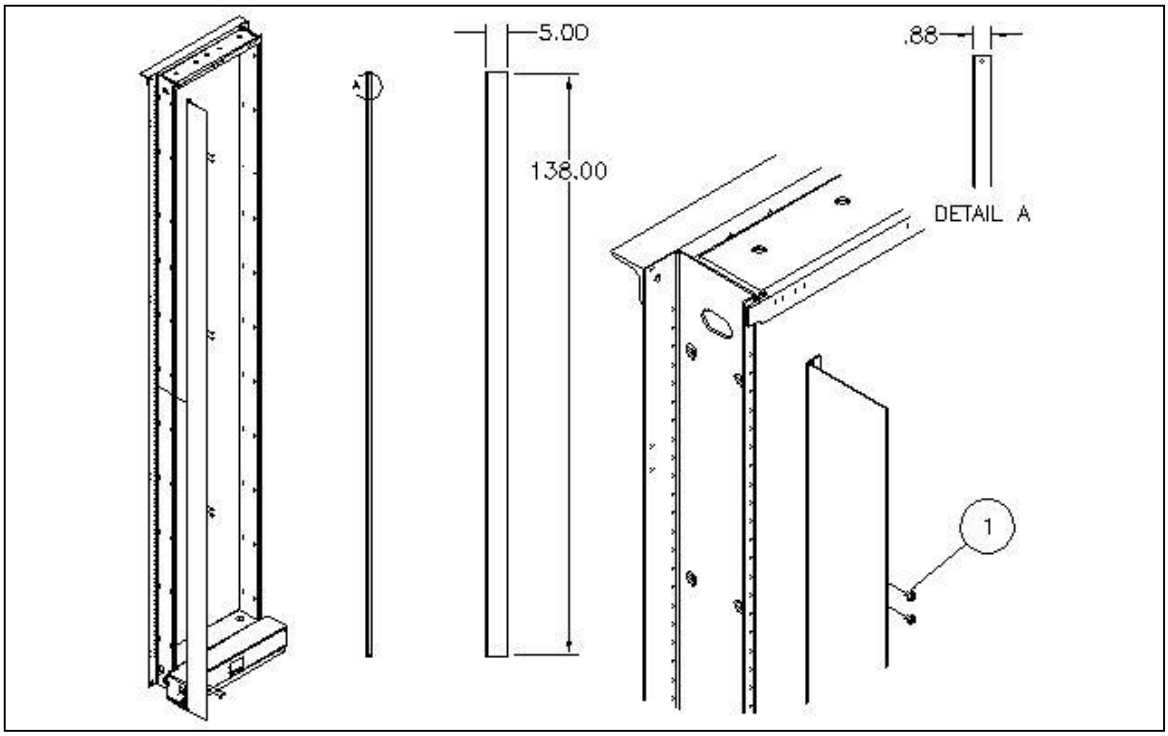

CSF#	H
EGS47XX	11‘-6"

EGS HARDWARE			
ITEM#	QTY#	CSF#	DESCRIPTION
1	8	PH0400FST	12-24 X 1/4” PH PHIL

NOTES:
-KIT INCLUDES ALL MOUNTING HARDWARE & END GUARD SHIELD.
-EGSXX SERIES - END SHIELD FOR USE ON STANDARD DUTY RU & RN BAYS.
-SEE ESEXX SERIES FOR RUE & RNE HEAVY DUTY SEISMIC BAYS.
-EGS CAN BE INSTALL EITHER ON RIGHT OR LEFT SIDE.

Specifications subject to change. Please contact CSF Customer Service for more information.
© copyright 2004 Central Steel Fabricators, Inc.
http://www.centralsteelfab.com ◆ 2100 Parkes Drive, Broadview, IL 60155
Phone: 708-652-2037 Fax: 708-652-7010

SEISMIC END SHIELD KIT

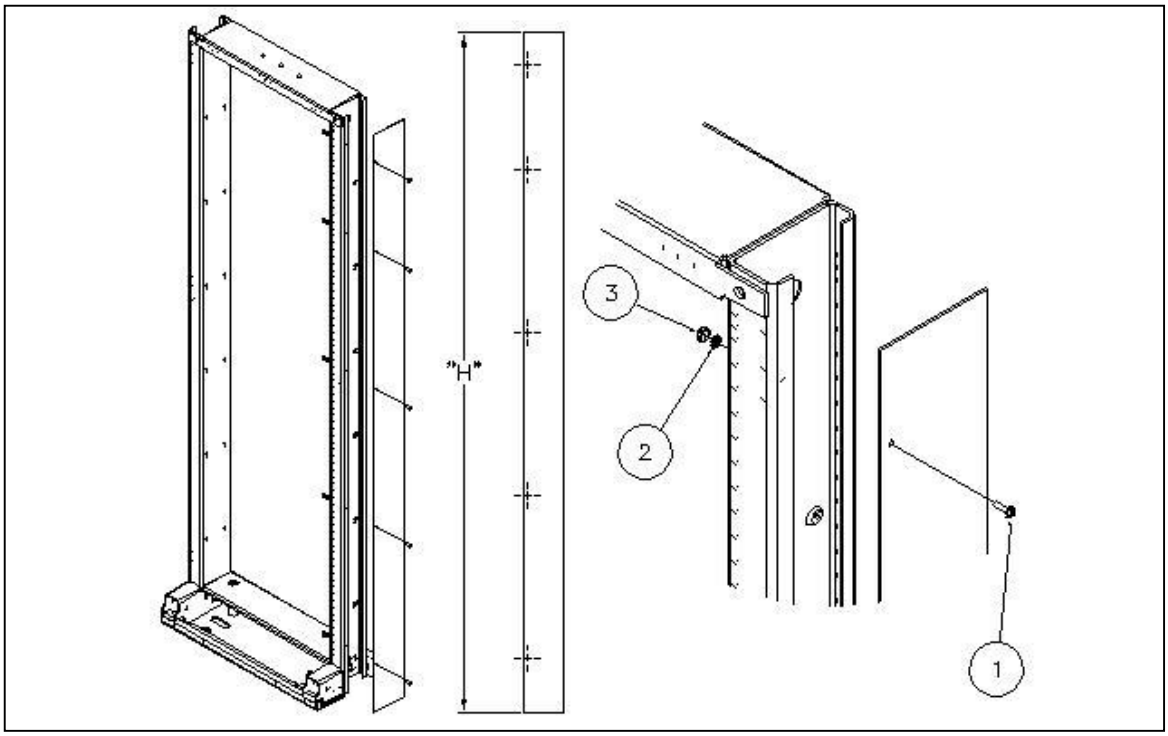

CSF#	H
ESE25XX	7'
ESE35XX	9'
ESE47XX	11'-6"

ESE HARDWARE KIT			
ITEM#	CSF#	QTY	DESCRIPTION
1	PH0404	5	12-24 X 5/8" PAN HEAD
2	LWE153	5	#12 EXT. TOOTH LOCKWASHER
3	HN143	5	12-24 HEX NUT

NOTES:

-KIT INCLUDES ALL MOUNTING HARDWARE & END SHIELD.

-ESEXX SERIES – END SHIELD FOR USE ON RUE & RNE, HEAVY DUTY SEISMIC BAYS

-SEE EGSXX SERIES FOR STANDARD DUTY RU & RN BAYS.

-ESE CAN BE INSTALL EITHER ON RIGHT OR LEFT SIDE.

- RELAY RACK NOT INCLUDED

Specifications subject to change. Please contact CSF Customer Service for more information.

© copyright 2004 Central Steel Fabricators, Inc.

http://www.centralsteelfab.com ◆ 2100 Parkes Drive, Broadview, IL 60155
Phone: 708-652-2037 Fax: 708-652-7010

SEISMIC END SHIELD [ESE25XX] KIT

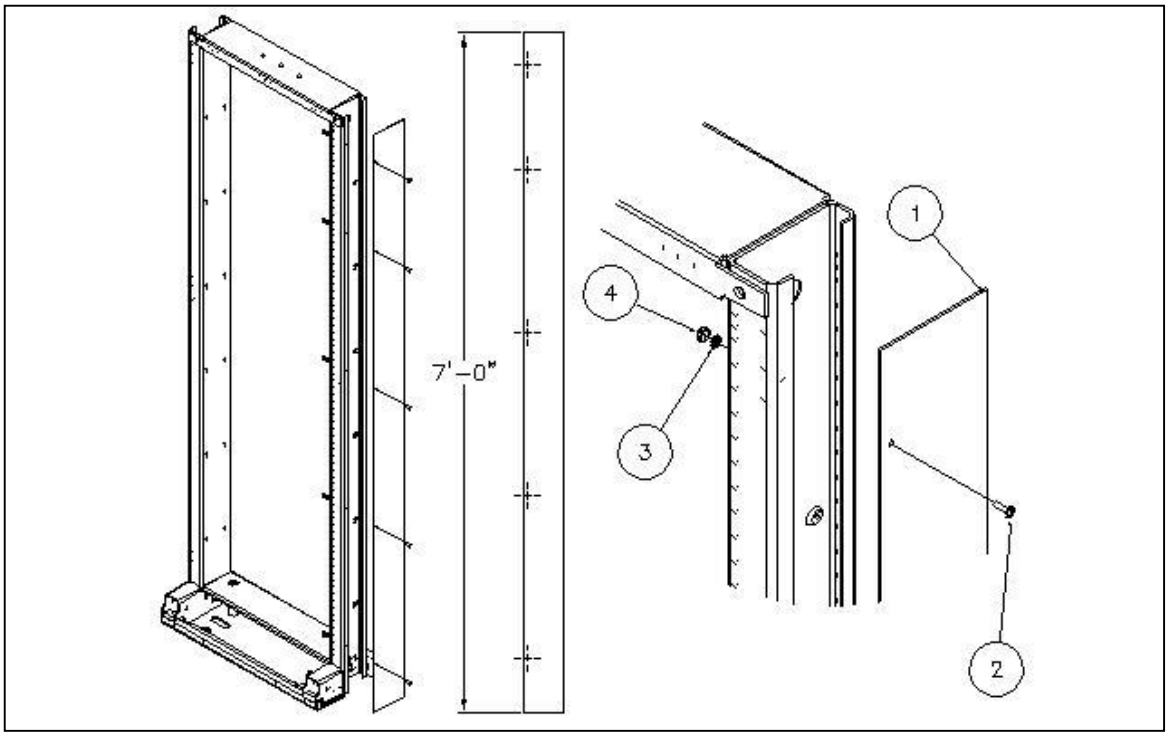

CSF#	H
ESE25XX	7'-0"

ESE HARDWARE KIT			
ITEM#	CSF#	QTY	DESCRIPTION
1	ESE25XX	1	SEISMIC END SHIELD [7'-0"]
2	PH0404	5	12-24 X 5/8" PAN HEAD
3	LWE153	5	#12 EXT. TOOTH LOCKWASHER
4	HN143	5	12-24 HEX NUT

NOTES:

-KIT INCLUDES ALL MOUNTING HARDWARE & END SHIELD.

-ESEXX SERIES – END SHIELD FOR USE ON RUE & RNE, HEAVY DUTY SEISMIC BAYS

-SEE EGSXX SERIES FOR STANDARD DUTY RU & RN BAYS.

-ESE CAN BE INSTALL EITHER ON RIGHT OR LEFT SIDE.

- RELAY RACK NOT INCLUDED

Specifications subject to change. Please contact CSF Customer Service for more information.

© copyright 2004 Central Steel Fabricators, Inc.

http://www.centralsteelfab.com ◆ 2100 Parkes Drive, Broadview, IL 60155
Phone: 708-652-2037 Fax: 708-652-7010

SEISMIC END SHIELD [ESE35XX] KIT

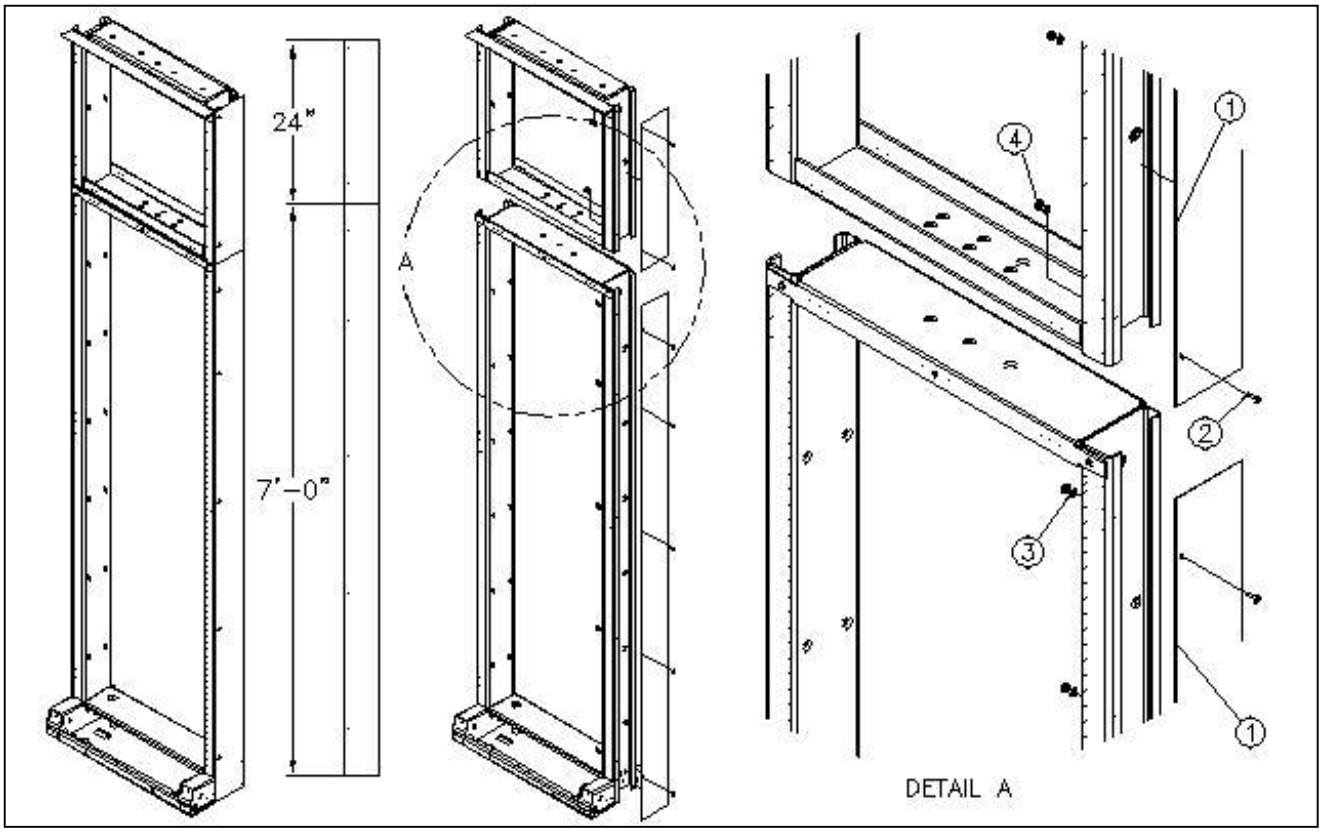

CSF#	H
ESE35XX	9'-0"

[ESE35XX] HARDWARE KIT			
ITEM#	CSF#	QTY	DESCRIPTION
1	ESE35XX	1	SEISMIC END SHIELD
2	PH0404	5	12-24 X 5/8" PAN HEAD
3	LWE153	5	#12 EXT. TOOTH LOCKWASHER
4	HN143	5	12-24 HEX NUT

NOTES:

-KIT INCLUDES ALL MOUNTING HARDWARE & END SHIELD.

-ESEXX SERIES – END SHIELD FOR USE ON RUE & RNE, HEAVY DUTY SEISMIC BAYS

-SEE EGSXX SERIES FOR STANDARD DUTY RU & RN BAYS.

-ESE CAN BE INSTALL EITHER ON RIGHT OR LEFT SIDE.

- RELAY RACK NOT INCLUDED

Specifications subject to change. Please contact CSF Customer Service for more information.

© copyright 2004 Central Steel Fabricators, Inc.

http://www.centralsteelfab.com ◆ 2100 Parkes Drive, Broadview, IL 60155
Phone: 708-652-2037 Fax: 708-652-7010

SEISMIC END SHIELD [ESE47XX] KIT

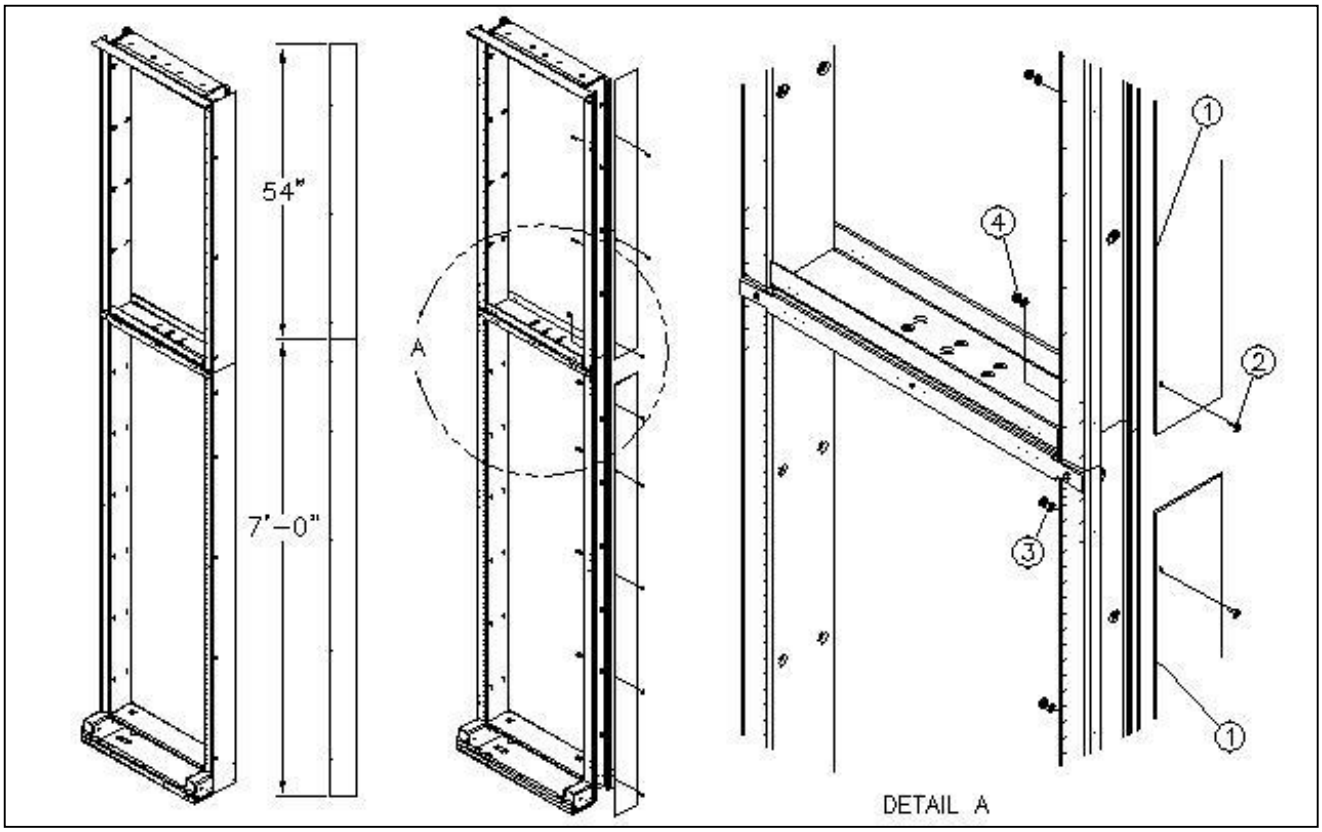

CSF#	H
ESE47XX	11'-6"

[ESE47XX] HARDWARE KIT			
ITEM#	CSF#	QTY	DESCRIPTION
1	ESE47XX	1	SEISMIC END SHIELD
2	PH0404	5	12-24 X 5/8" PAN HEAD
3	LWE153	5	#12 EXT. TOOTH LOCKWASHER
4	HN143	5	12-24 HEX NUT

NOTES:

-KIT INCLUDES ALL MOUNTING HARDWARE & END SHIELD.

-ESEXX SERIES – END SHIELD FOR USE ON RUE & RNE, HEAVY DUTY SEISMIC BAYS

-SEE EGSXX SERIES FOR STANDARD DUTY RU & RN BAYS.

-ESE CAN BE INSTALL EITHER ON RIGHT OR LEFT SIDE.

- RELAY RACK NOT INCLUDED

Specifications subject to change. Please contact CSF Customer Service for more information.

© copyright 2004 Central Steel Fabricators, Inc.

http://www.centralsteelfab.com ◆ 2100 Parkes Drive, Broadview, IL 60155
Phone: 708-652-2037 Fax: 708-652-7010

END COVER [ECXXXX] KIT

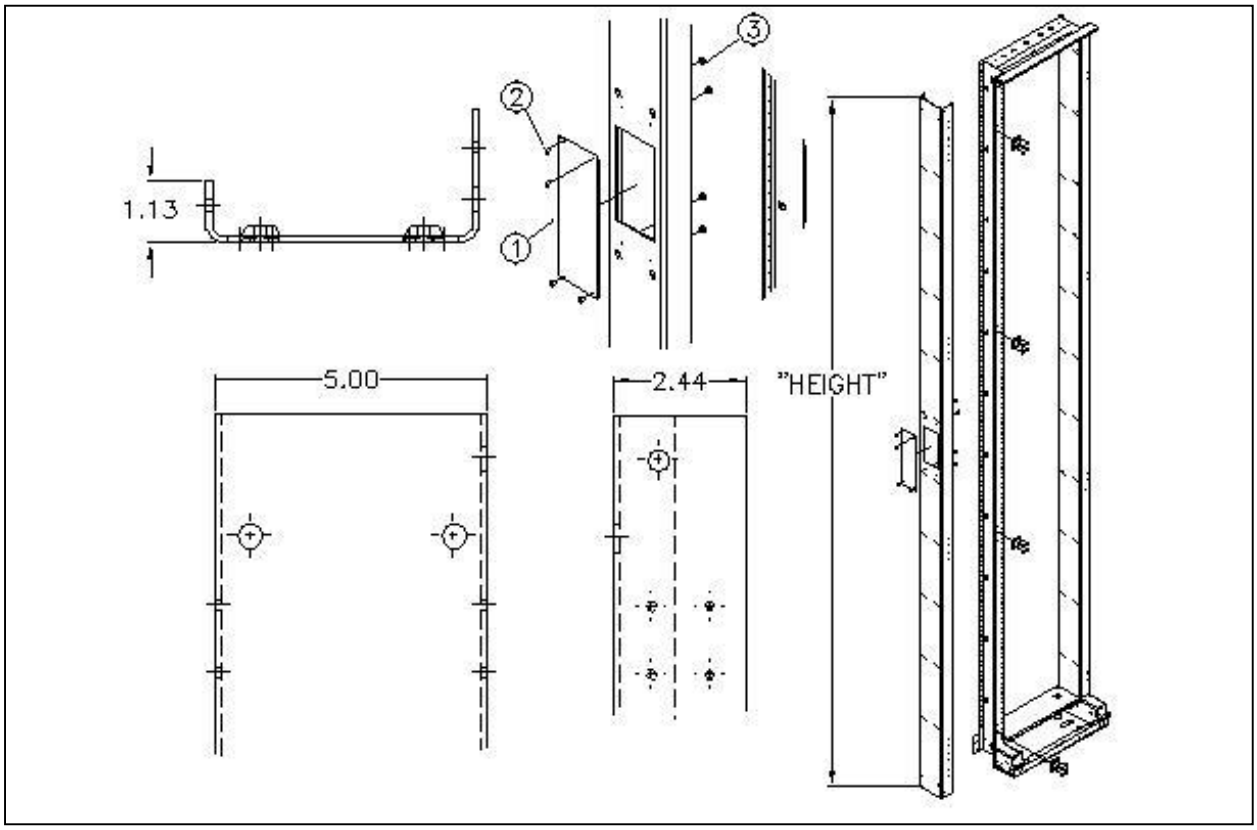

CSF#	HEIGHT
EC25XX	7' – 0"
EC35XX	9' – 0"
EC47XX	11' - 6"

[ECXX] KIT			
ITEM#	CSF#	QTY	DESCRIPTION
1	P186702	1	3.50" x 10.75" EC-COVER PLATE
2	RH0203	4	8-32 ROUND HEAD X 5/16"
3	HN141	4	8-32 HEX NUT

NOTES:

-KIT INCLUDES ALL MOUNTING HARDWARE & END COVER

-ECXX SERIES – END COVER FOR USE ON SEISMIC NETWORK BAYS & NETWORK BAYS.

-END COVER CAN BE INSTALL EITHER ON RIGHT OR LEFT SIDE.

Specifications subject to change. Please contact CSF Customer Service for more information.

© copyright 2004 Central Steel Fabricators, Inc.

http://www.centralsteelfab.com ◆ 2100 Parkes Drive, Broadview, IL 60155
Phone: 708-652-2037 Fax: 708-652-7010

END COVER [EC25XX] KIT

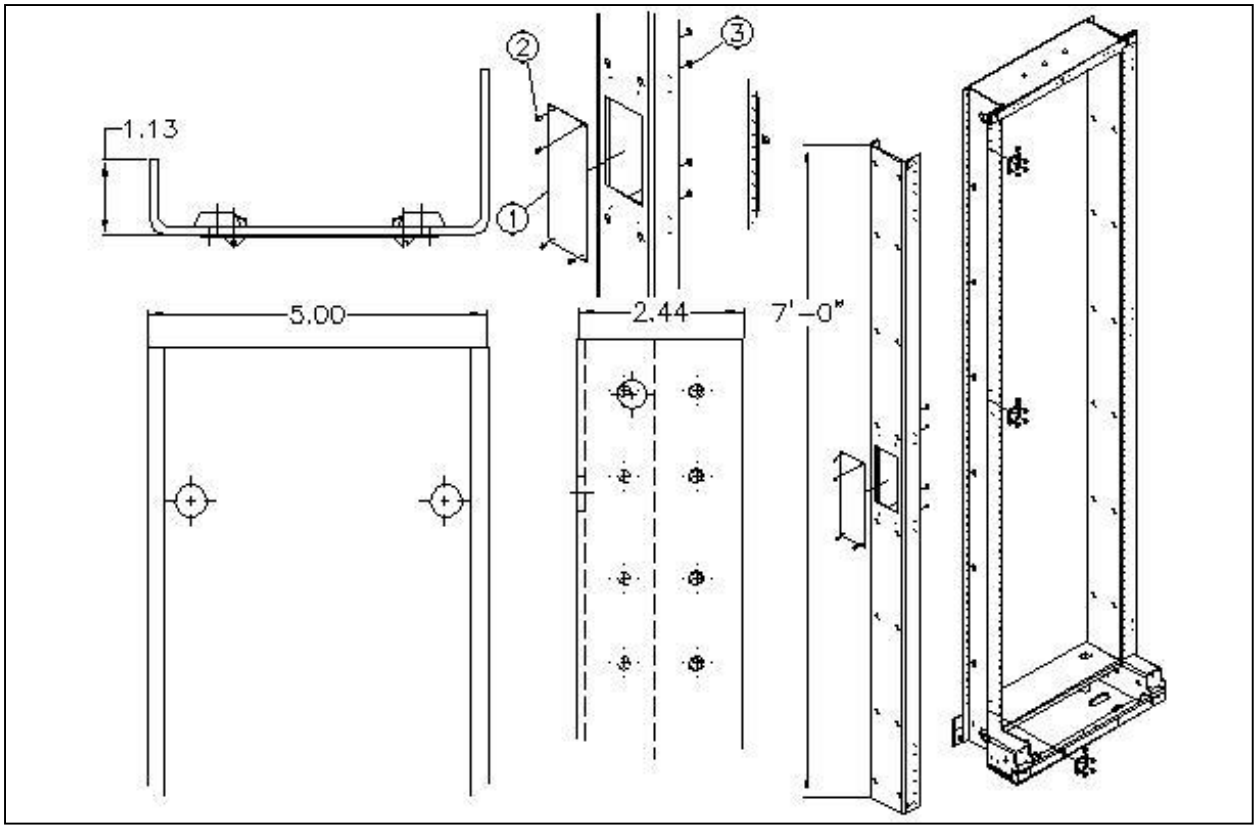

CSF#	HEIGHT
EC25XX	7' – 0"

[ECXX] KIT			
ITEM#	CSF#	QTY	DESCRIPTION
1	P186702	1	3.50" x 10.75" EC-COVER PLATE
2	RH0203	4	8-32 ROUND HEAD X 5/16"
3	HN141	4	8-32 HEX NUT

NOTES:
-KIT INCLUDES ALL MOUNTING HARDWARE & END COVER
-ECXX SERIES – END COVER FOR USE ON SEISMIC NETWORK BAYS & NETWORK BAYS.
-END COVER CAN BE INSTALL EITHER ON RIGHT OR LEFT SIDE.

Specifications subject to change. Please contact CSF Customer Service for more information.
© copyright 2004 Central Steel Fabricators, Inc.
http://www.centralsteelfab.com ◆ 2100 Parkes Drive, Broadview, IL 60155
Phone: 708-652-2037 Fax: 708-652-7010

END COVER [EC35XX] KIT

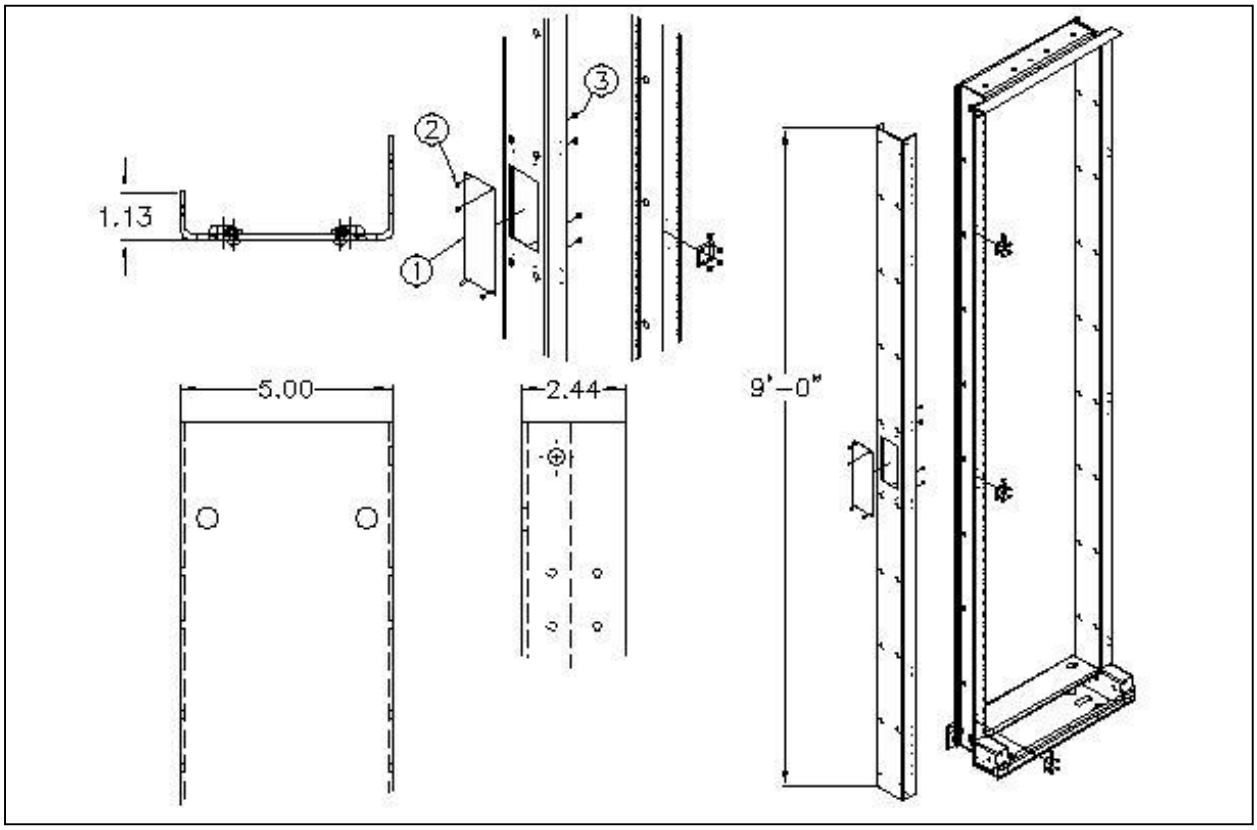

CSF#	HEIGHT
EC35XX	9‘ – 0”

[ECXX] KIT			
ITEM#	CSF#	QTY	DESCRIPTION
1	P186702	1	3.50” x 10.75” EC-COVER PLATE
2	RH0203	4	8-32 ROUND HEAD X 5/16”
3	HN141	4	8-32 HEX NUT

NOTES:
-KIT INCLUDES ALL MOUNTING HARDWARE & END COVER
-ECXX SERIES – END COVER FOR USE ON SEISMIC NETWORK BAYS & NETWORK BAYS.
-END COVER CAN BE INSTALL EITHER ON RIGHT OR LEFT SIDE.

Specifications subject to change. Please contact CSF Customer Service for more information.
© copyright 2004 Central Steel Fabricators, Inc.
http://www.centralsteelfab.com ◆ 2100 Parkes Drive, Broadview, IL 60155
Phone: 708-652-2037 Fax: 708-652-7010

END COVER [EC47XX] KIT

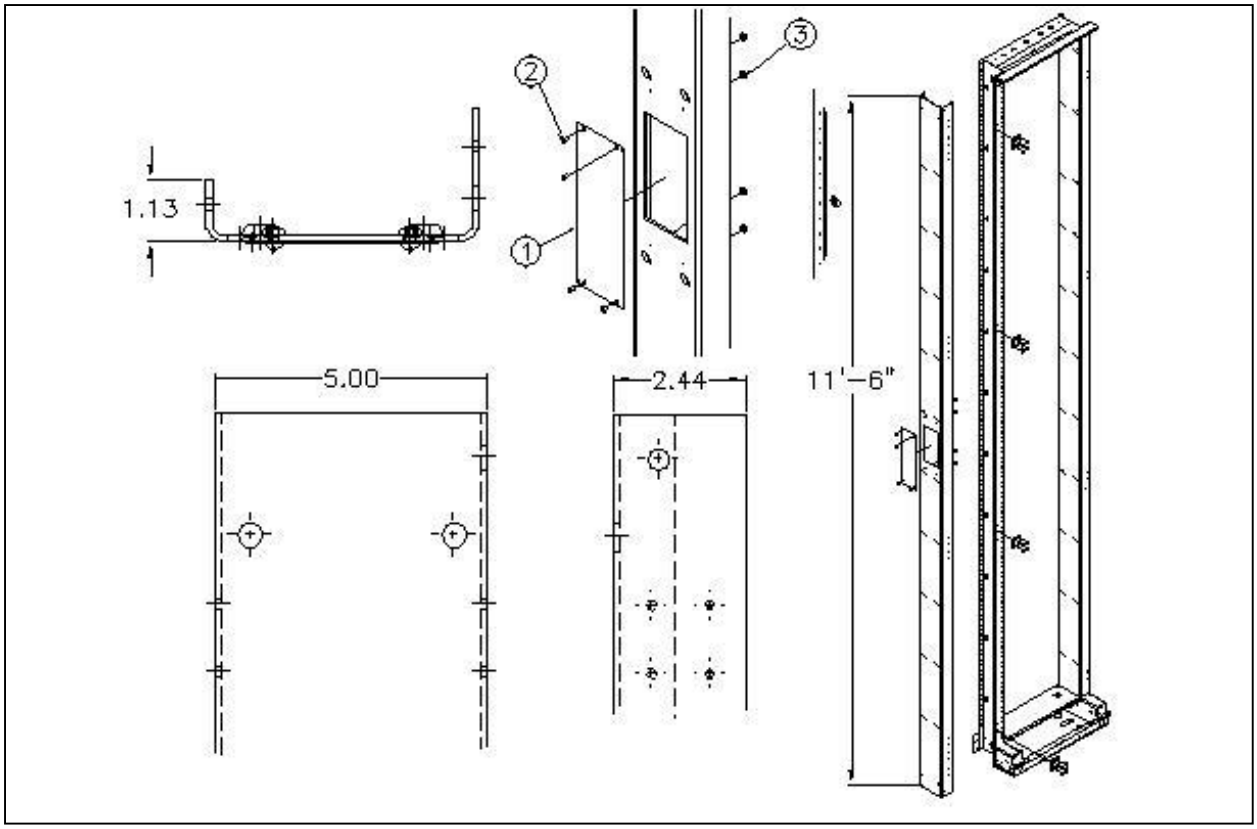

CSF#	HEIGHT
EC47XX	11‘ - 6”

[ECXX] KIT			
ITEM#	CSF#	QTY	DESCRIPTION
1	P186702	1	3.50” x 10.75” EC-COVER PLATE
2	RH0203	4	8-32 ROUND HEAD X 5/16”
3	HN141	4	8-32 HEX NUT

NOTES:
-KIT INCLUDES ALL MOUNTING HARDWARE & END COVER
-ECXX SERIES – END COVER FOR USE ON SEISMIC NETWORK BAYS & NETWORK BAYS.
-END COVER CAN BE INSTALL EITHER ON RIGHT OR LEFT SIDE.

Specifications subject to change. Please contact CSF Customer Service for more information.
© copyright 2004 Central Steel Fabricators, Inc.
http://www.centralsteelfab.com ◆ 2100 Parkes Drive, Broadview, IL 60155
Phone: 708-652-2037 Fax: 708-652-7010

NETWORK FILLER PANEL CABLE SECTION

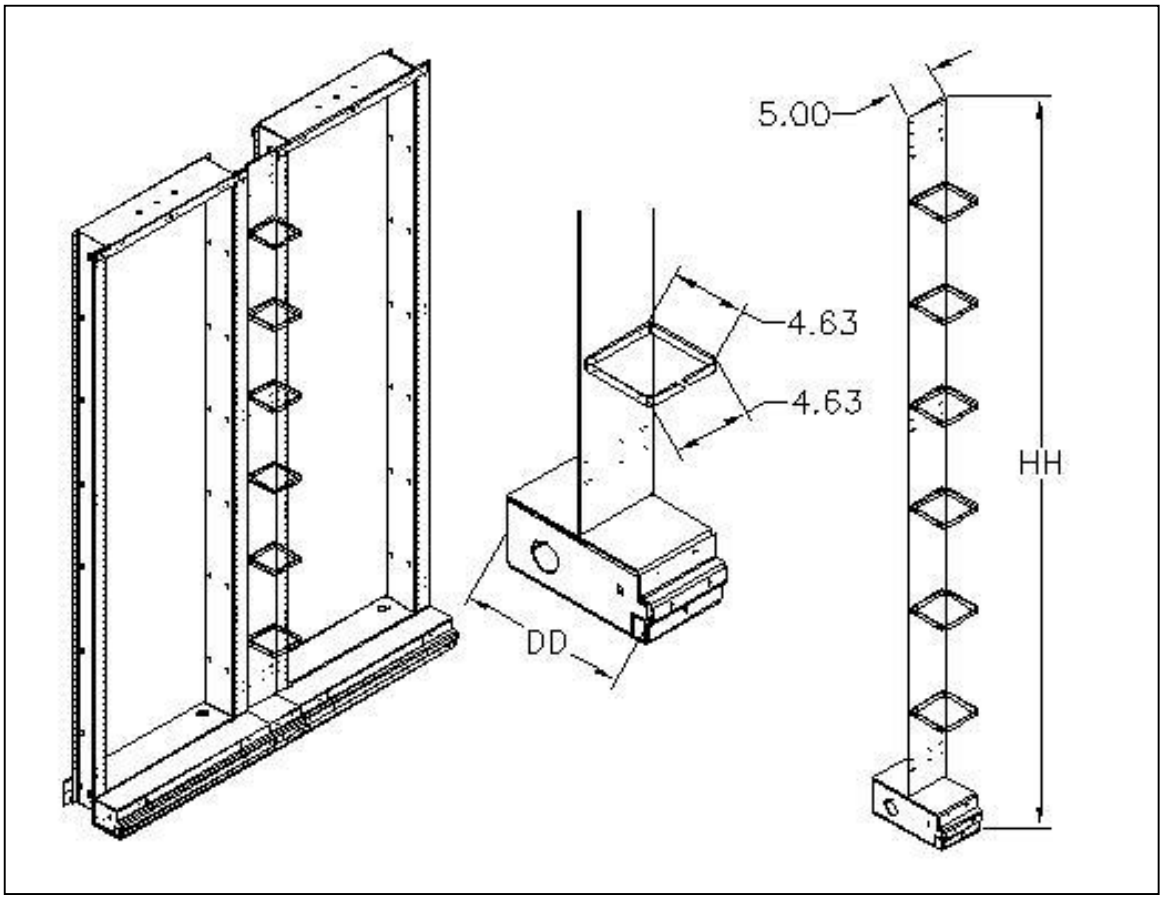

CSF#	DD	HH
FPD051025XXK	10.00	7'
FPD051030XXK	10.00	8'
FPD051035XXK	10.00	9'
FPD051047XXK	10.00	11‘-6"

NOTES:
-FILLER PANEL CAN BE REVERSED TO USE THE CABLE RINGS WITHIN THE DUCT
-KIT INCLUDES FILLER PANEL, CABLE RINGS, BASE, AND ALL MOUNTING HARDWARE
-RELAY RACKS NOT INCLUDED
-OTHER SIZES AVAILABLE UPON REQUEST

Specifications subject to change. Please contact CSF Customer Service for more information.
© copyright 2004 Central Steel Fabricators, Inc.
http://www.centralsteelfab.com ◆ 2100 Parkes Drive, Broadview, IL 60155
Phone: 708-652-2037 Fax: 708-652-7010

WMP23XX WIRE MANAGEMENT PANEL

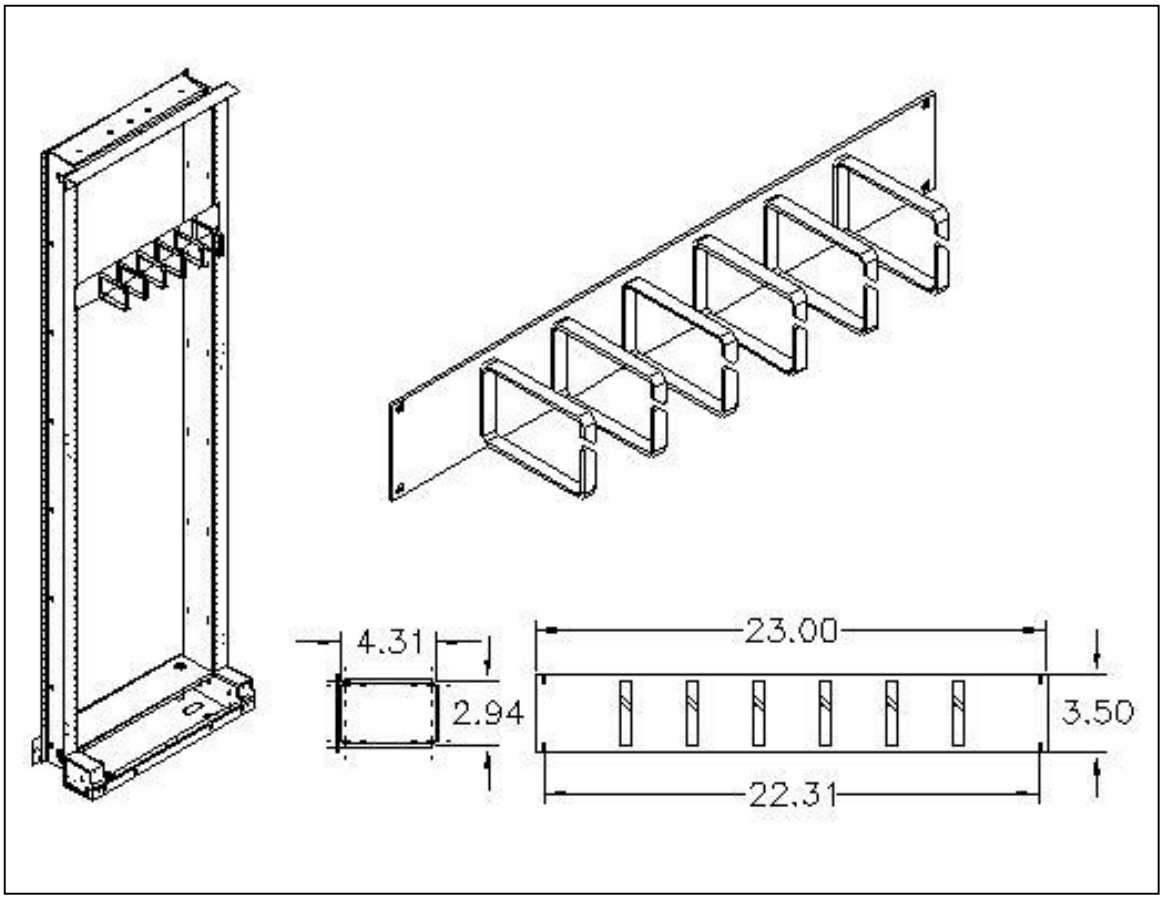

CSF#	W
WMP23XX	23.00”

NOTES:
-KIT INCLUDES ALL MOUNTING HARDWARE
-OTHER SIZES AND FINISHES AVAILABLE UPON REQUEST
-BAY NOT INCLUDED

Specifications subject to change. Please contact CSF Customer Service for more information.

© copyright 2004 Central Steel Fabricators, Inc.
http://www.centralsteelfab.com ◆ 2100 Parkes Drive, Broadview, IL 60155
Phone: 708-652-2037 Fax: 708-652-7010

VCR0204XXK – VERTICAL CABLE BRACKET 2.00” X 4.00”

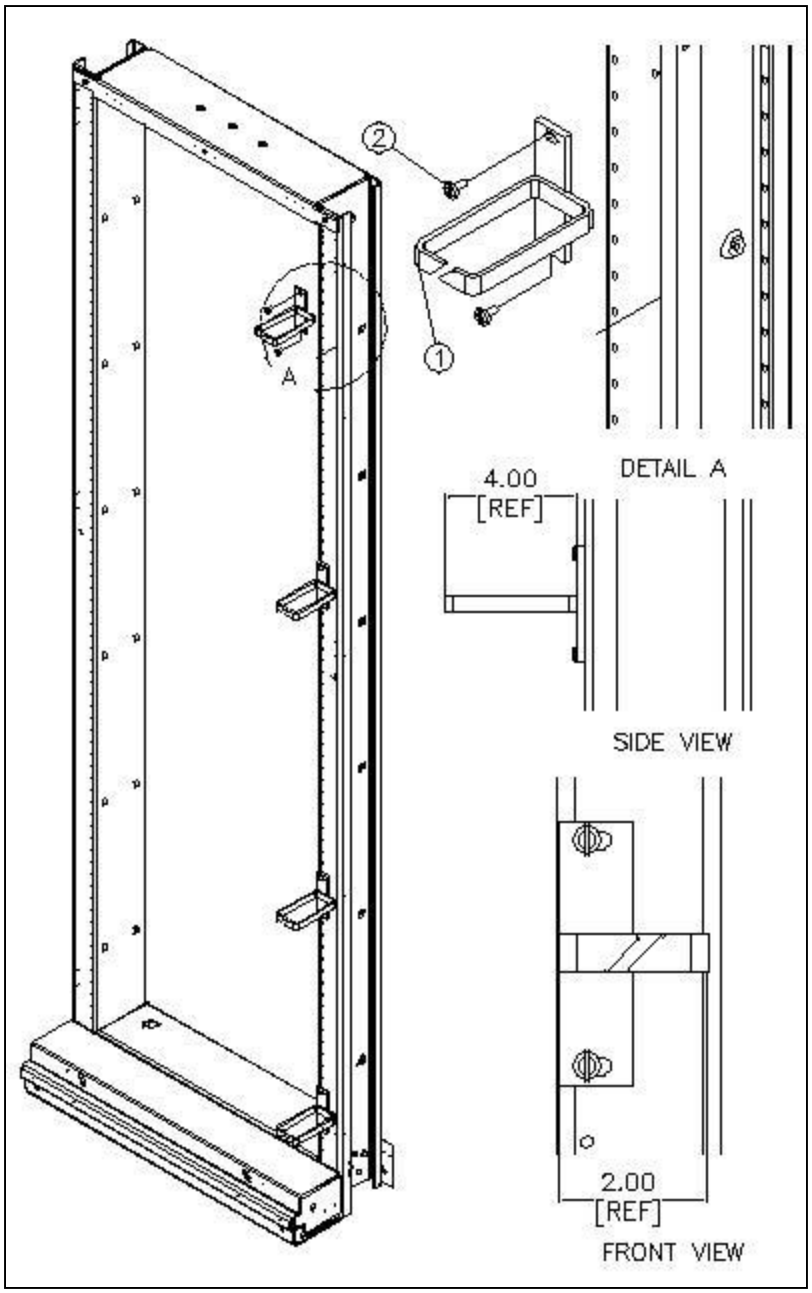

VCR0204XXK – VERTICAL CABLE BRACKET KIT			
ITEM#	CSF#	QTY	DESCRIPTION
1	VCR0204	1	VERTICAL CABLE BRACKET 2.00” X 4.00”
2	PH0401FST	2	12-24 X 3/8” PH PHIL CUTTING

NOTES:
-KIT INCLUDES ALL MOUNTING HARDWARE
-AVAILABLE IN CB AND DG
-BAY NOT INCLUDED

Specifications subject to change. Please contact CSF Customer Service for more information.

© copyright 2004 Central Steel Fabricators, Inc.
http://www.centralsteelfab.com ◆ 2100 Parkes Drive, Broadview, IL 60155
Phone: 708-652-2037 Fax: 708-652-7010

WHG1823XX - WIRE HARNESS GUARD

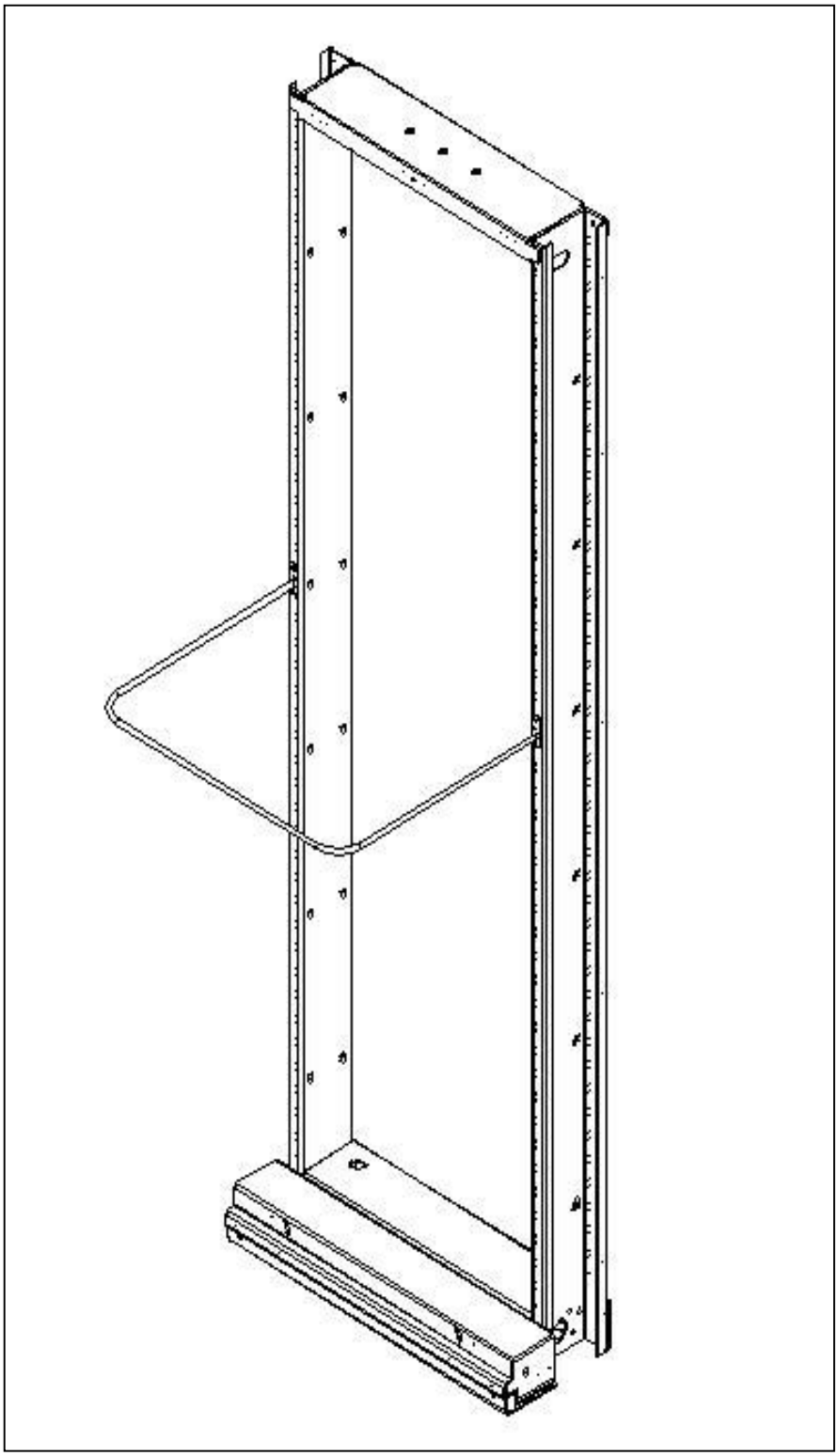

WHG1823 – WIRE HARNESS GUARD	
CSF#	DESCRIPTION
WHG1823XX	18.00 X 23.00”

NOTES:
-FINISH: ZINC CLEAR

Specifications subject to change. Please contact CSF Customer Service for more information.

© copyright 2004 Central Steel Fabricators, Inc.
http://www.centralsteelfab.com ◆ 2100 Parkes Drive, Broadview, IL 60155
Phone: 708-652-2037 Fax: 708-652-7010

JTXXXX JUMPER THROUGH

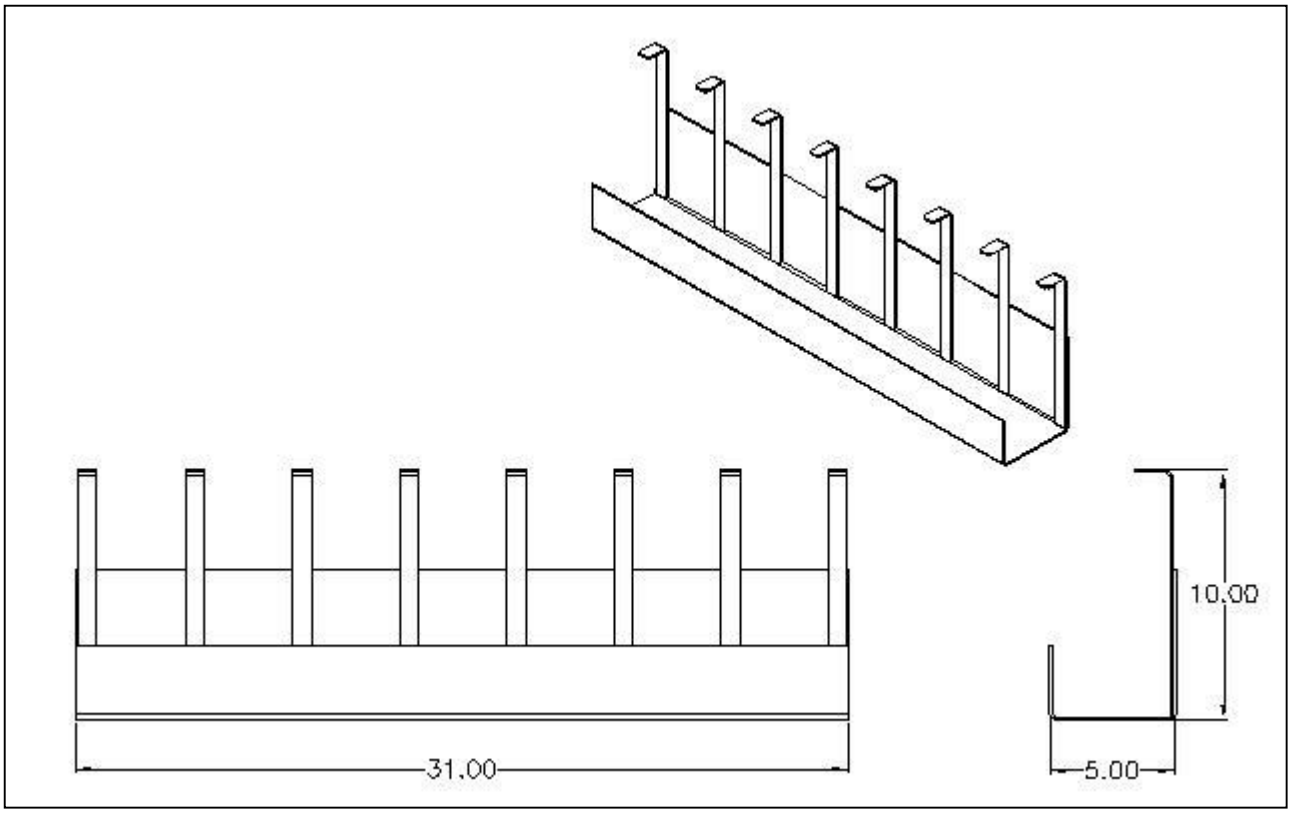

CSF#	W
JT310510i	31.00”

NOTES:
-KIT INCLUDES ALL MOUNTING HARDWARE
-OTHER SIZES AND FINISHES AVAILABLE UPON REQUEST
-BAY NOT INCLUDED

Specifications subject to change. Please contact CSF Customer Service for more information.
© copyright 2004 Central Steel Fabricators, Inc.
http://www.centralsteelfab.com ◆ 2100 Parkes Drive, Broadview, IL 60155
Phone: 708-652-2037 Fax: 708-652-7010

23.00” HEAT DEFLECTOR KIT – CLEAR CHROMATE

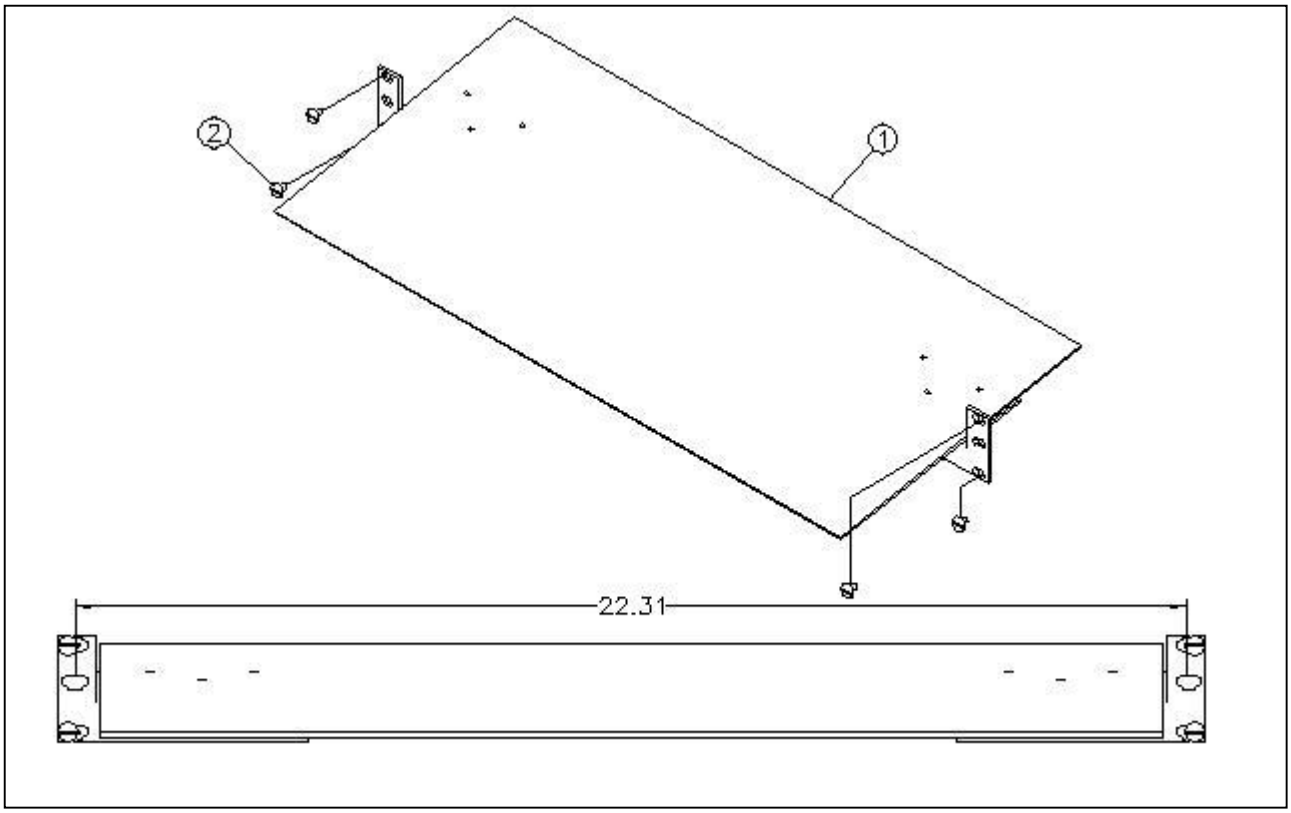

HDU7802CC KIT			
ITEM#	CSF#	QTY	DESCRIPTION
1	HDU7802CC	1	23.00” HEAT DEFLECTOR
2	PH0400FST	4	12-24 X 1/4 PH PHIL CUTTING ZY

NOTES:
-KIT INCLUDES ALL MOUNTING HARDWARE
-OTHER SIZES AND FINISHES AVAILABLE UPON REQUEST
- FINISH: CLEAR CHROMATE

Specifications subject to change. Please contact CSF Customer Service for more information.
© copyright 2004 Central Steel Fabricators, Inc.
http://www.centralsteelfab.com ◆ 2100 Parkes Drive, Broadview, IL 60155
Phone: 708-652-2037 Fax: 708-652-7010

ADJUSTABLE HEAT BAFFLE - 19.00” / 23.00”

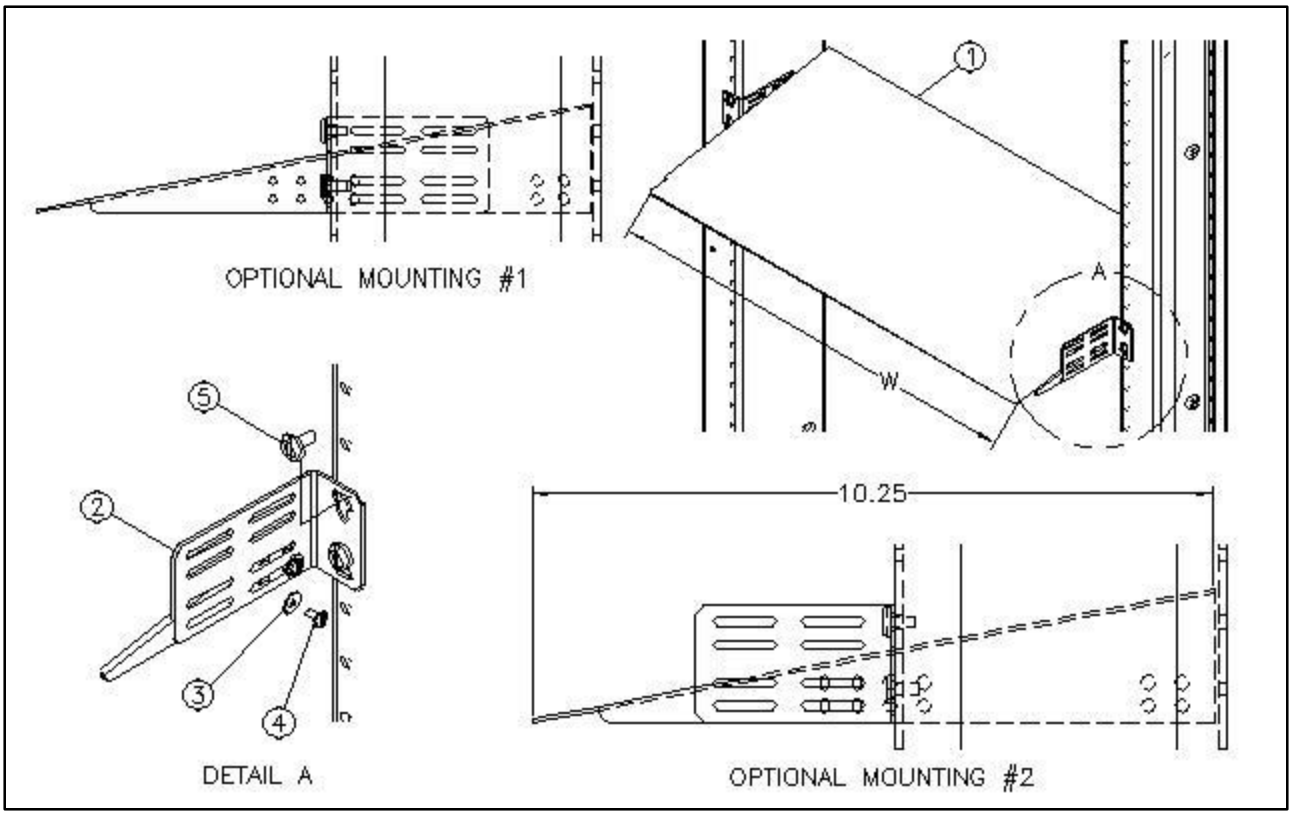

AHB - HARDWARE			
ITEM#	CSF#	QTY	DESCRIPTION
2	ME223	2	MOUNTING EAR
3	FW160	4	#6 FLAT WASHER ZY
4	PH0102FST	4	6-32 X 1/4” PH PHIL CUTTING ZY [NOT SHOWN]
5	PH0401FST	4	12-24 X 3/8 PH PHIL CUTTING

AHB2XXXX HEAT BAFFLE		
ITEM	CSF#	W
1	AHB219XX	19.00”
1	AHB223XX	23.00”

NOTES:
-KIT INCLUDES ALL MOUNTING HARDWARE
-OTHER SIZES AND FINISHES AVAILABLE UPON REQUEST
-HEAT BAFFLE CAN ALSO BE INSTALLED FLUSH ON TO THE BAY
-FINISHES: SEE TECH DATA FOR PAINT CODES

RVSD*0612

Specifications subject to change. Please contact CSF Customer Service for more information.

© copyright 2004 Central Steel Fabricators, Inc.
http://www.centralsteelfab.com ◆ 2100 Parkes Drive, Broadview, IL 60155
Phone: 708-652-2037 Fax: 708-652-7010

EQUIPMENT SHELF

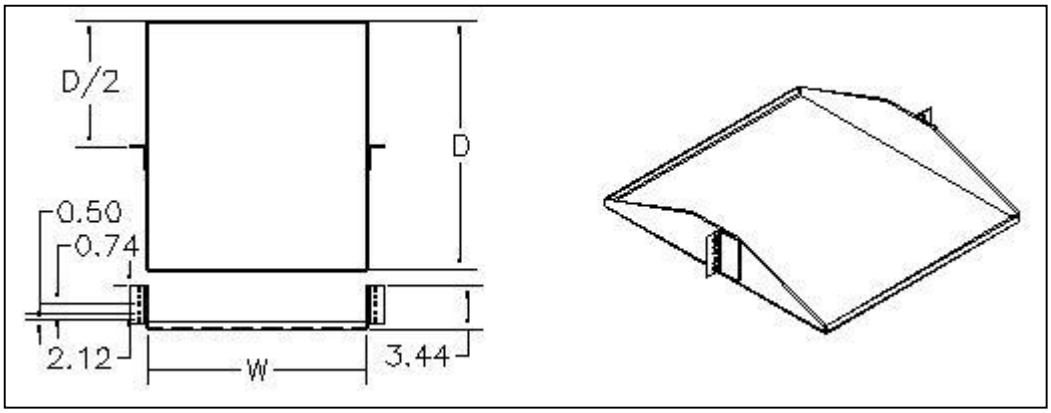

CSF#	W	D
EQS6204XX	17 1/4"	19 1/2"
EQS6207XX	21 1/4"	15 1/2"
EQS6208XX	21 1/4"	19 1/2"

NOTES:
-KIT INCLUDES ALL MOUNTING HARDWARE AND EQUIPMENT SHELF

Specifications subject to change. Please contact CSF Customer Service for more information.
© copyright 2004 Central Steel Fabricators, Inc.
http://www.centralsteelfab.com ◆ 2100 Parkes Drive, Broadview, IL 60155 ◆
Phone: 708-652-2037 Fax: 708-652-7010

EQUIPMENT SHELF

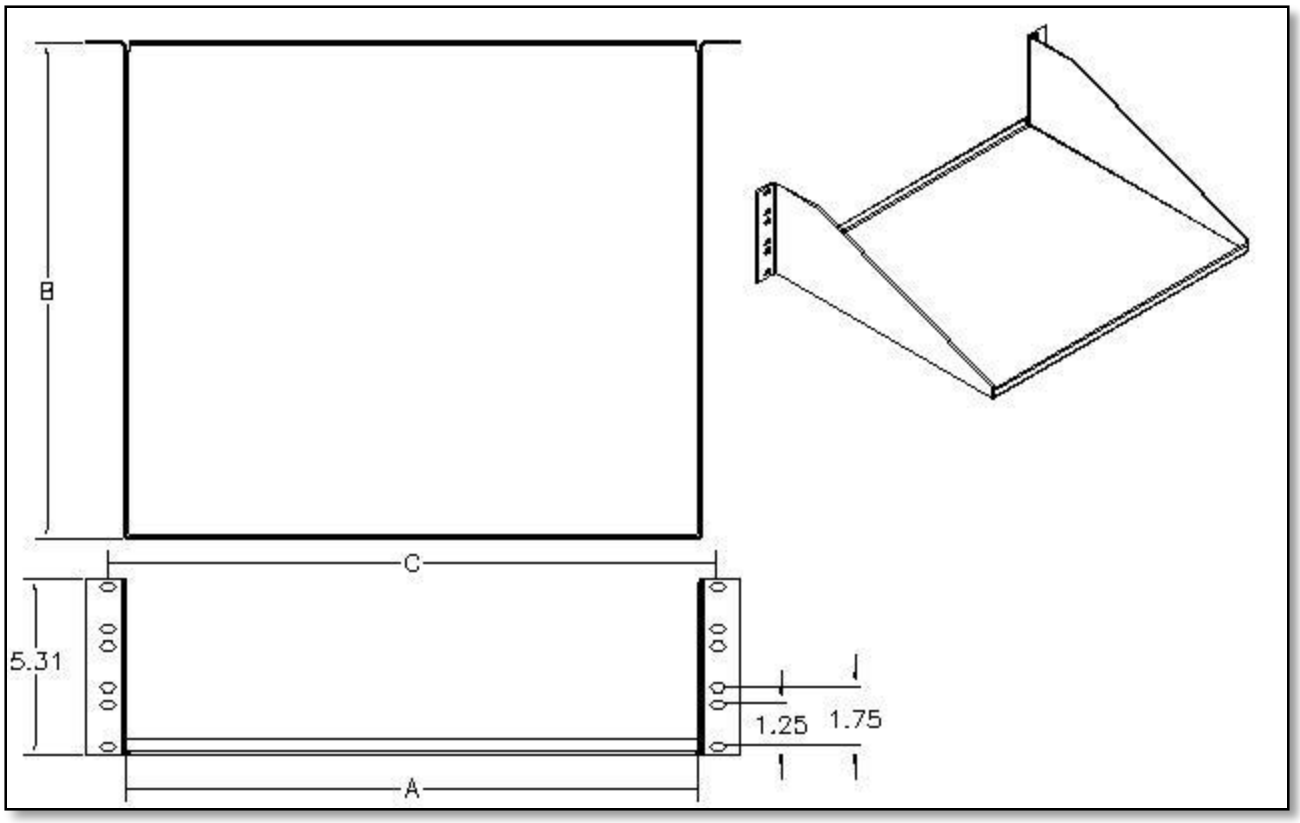

CSF#	A	B	C
EQS7701XX	17.19"	10.00"	18.31”
EQS7702XX	17.19"	12.00"	18.31”
EQS7703XX	17.19"	15.00"	18.31”
EQS7704XX	21.19"	10.00"	22.31”
EQS7705XX	21.19"	12.00"	22.31”
EQS7706XX	21.19"	15.00"	22.31”

NOTES:

-KIT INCLUDES ALL MOUNTING HARDWARE & EQUIPMENT SHELF

RVSD*0812

Specifications subject to change. Please contact CSF Customer Service for more information.

© copyright 2004 Central Steel Fabricators, Inc.
http://www.centralsteelfab.com ◆ 2100 Parkes Drive, Broadview, IL 60155
Phone: 708-652-2037 Fax: 708-652-7010

EQUIPMENT SHELF

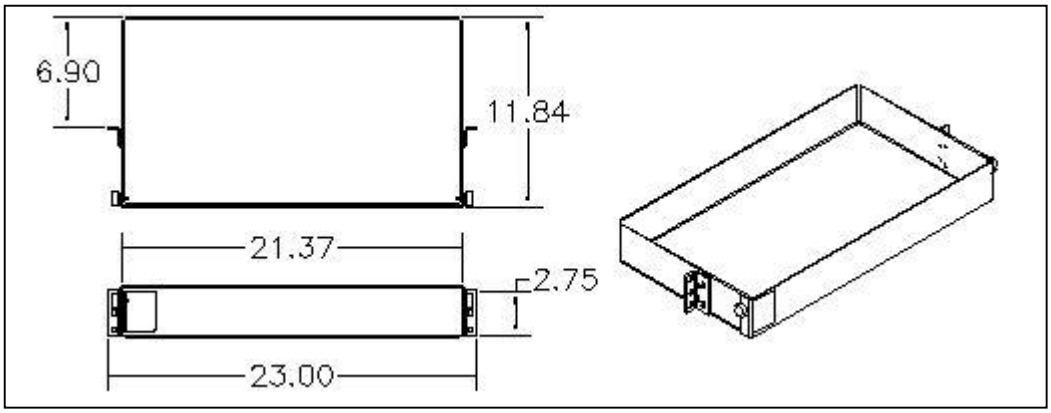

CSF#
EQS1121XX

NOTES:
-KIT INCLUDES ALL MOUNTING HARDWARE & EQUIPMENT SHELF

Specifications subject to change. Please contact CSF Customer Service for more information.
© copyright 2004 Central Steel Fabricators, Inc.
http://www.centralsteelfab.com ◆ 2100 Parkes Drive, Broadview, IL 60155 ◆
Phone: 708-652-2037 Fax: 708-652-7010

COLLAPSIBLE WRITING SHELF

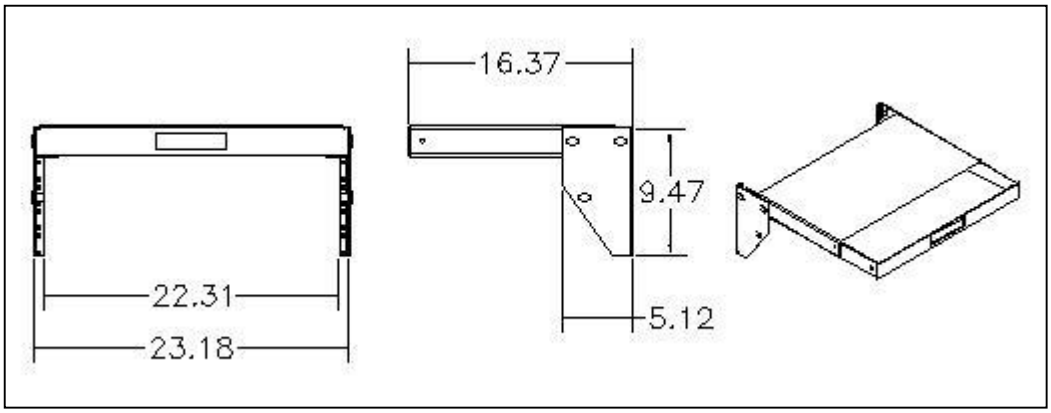

CSF#
CWS6104XX

NOTES:
-KIT INCLUDES ALL MOUNTING HARDWARE & EQUIPMENT SHELF

Specifications subject to change. Please contact CSF Customer Service for more information.
© copyright 2004 Central Steel Fabricators, Inc.
http://www.centralsteelfab.com ◆ 2100 Parkes Drive, Broadview, IL 60155
Phone: 708-652-2037 Fax: 708-652-7010

CT0X23XX CABLE TROUGHS

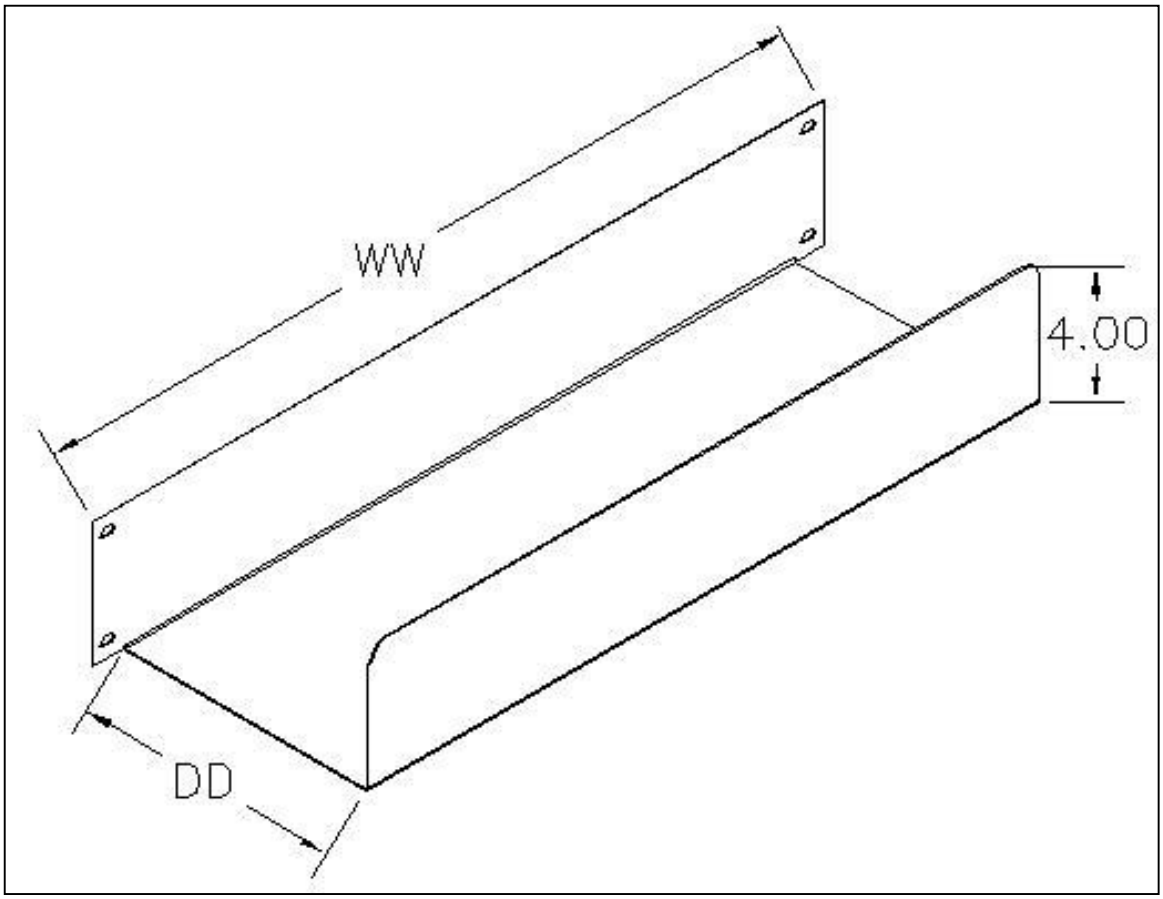

ITEM	WW	DD
CT0523XX	23.25"	5.00"
CT0823XX	23.25"	8.00"

NOTES:
-FINISHES: SEE TECH DATA FOR PAINT CODES
-OTHER SIZES AND FINISHES AVAILABLE UPON REQUEST
-KIT INCLUDES ALL MOUNTING HARDWARE

Specifications subject to change. Please contact CSF Customer Service for more information.
© copyright 2004 Central Steel Fabricators, Inc.
http://www.centralsteelfab.com ◆ 2100 Parkes Drive, Broadview, IL 60155
Phone: 708-652-2037 Fax: 708-652-7010

RX0300 Series EXTENSION RACK KIT

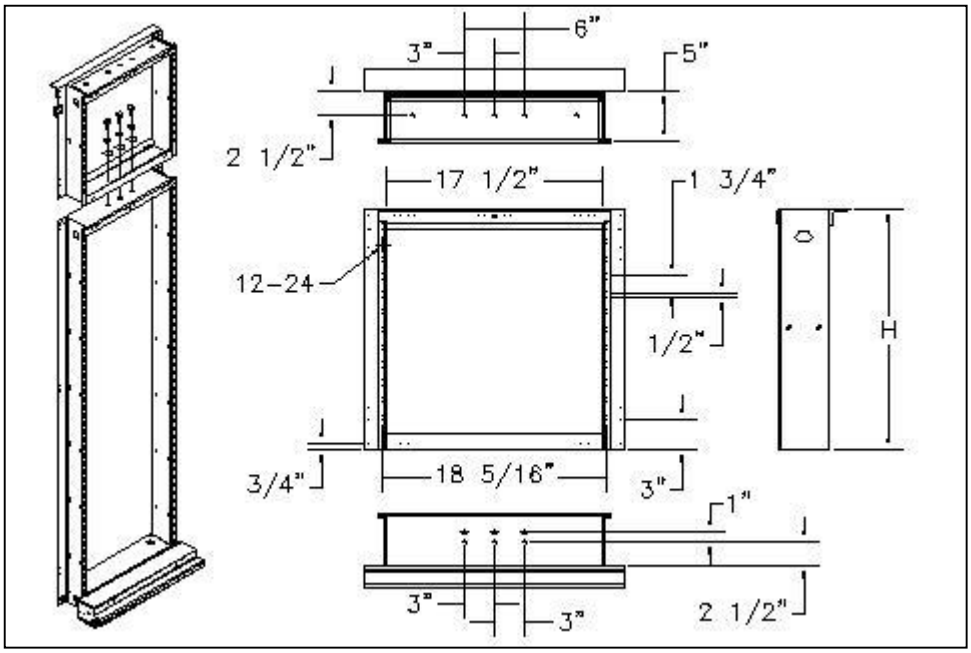

CSF#	H
RX0300XX	1'
RX0301XX	1' 6"
RX0301XX	2'
RX0303XX	2' 6"
RX0307XX	3' 6"

NOTES:
-KIT INCLUDES ALL MOUNTING HARDWARE & EXTENSION RACK

Specifications subject to change. Please contact CSF Customer Service for more information.
© copyright 2004 Central Steel Fabricators, Inc.
http://www.centralsteelfab.com ◆ 2100 Parkes Drive, Broadview, IL 60155
Phone: 708-652-2037 Fax: 708-652-7010

RX0400 Series EXTENSION RACK KIT

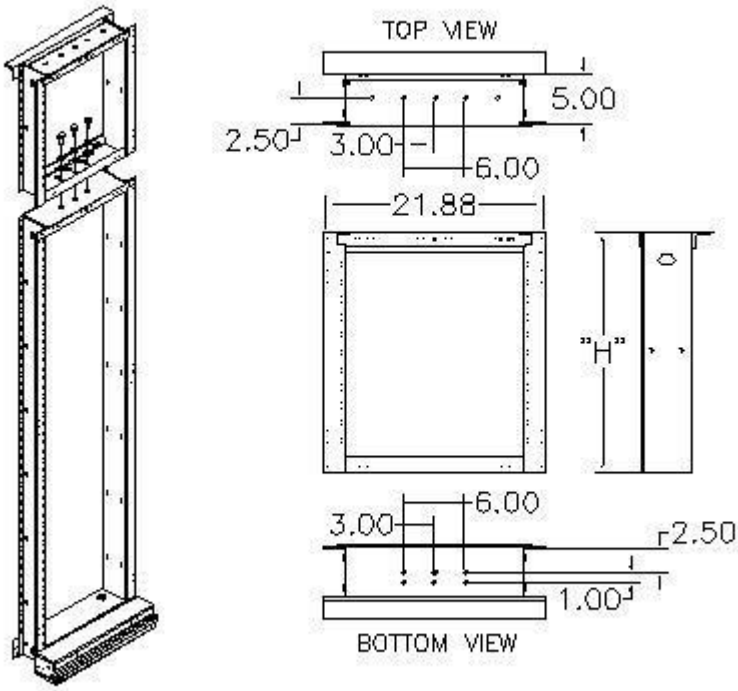

CSF#	H
RX0400XX	1'-0"
RX0401XX	1'-6"
RX0402XX	2'-0"
RX0403XX	2'-6"
RX0407XX	3'-6"
RX0412XX	4'-6"

NOTES:
- KIT INCLUDES ALL MOUNTING HARDWARE & EXTENSION RACK
- FINISHES: SEE TECH DATA FOR PAINT CODES
- OTHER SIZES AND FINISHES AVAILABLE UPON REQUEST

Specifications subject to change. Please contact CSF Customer Service for more information.
© copyright 2004 Central Steel Fabricators, Inc.
http://www.centralsteelfab.com ◆ 2100 Parkes Drive, Broadview, IL 60155
Phone: 708-652-2037 Fax: 708-652-7010

RX0500 Series EXTENSION RACK KIT

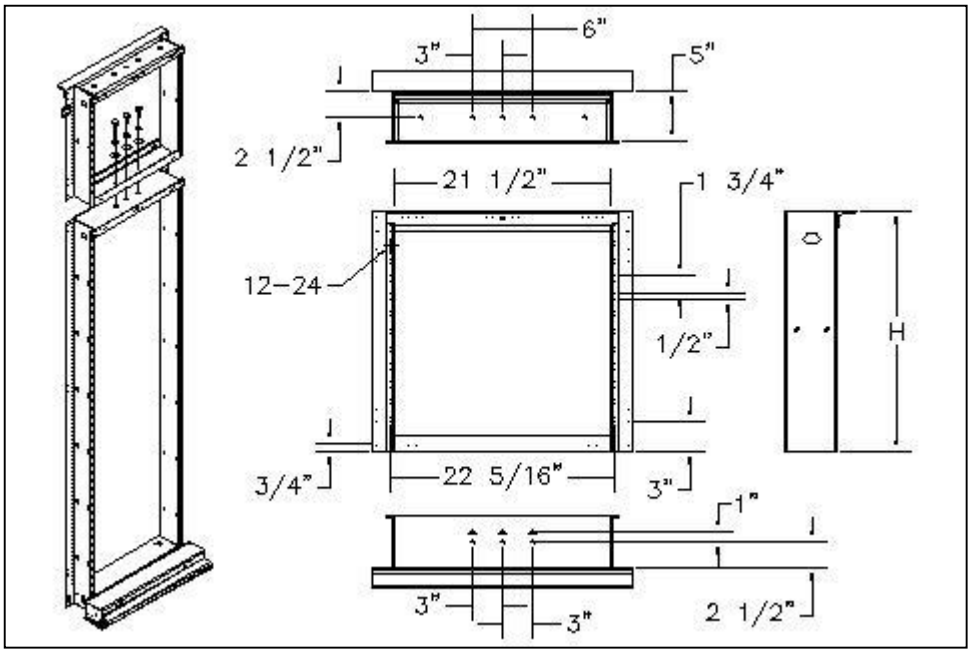

CSF#	H
RX0500XX	1‘-0”
RX0501XX	1‘- 6"
RX0501XX	2’-0”
RX0503XX	2‘- 6"
RX0507XX	3‘- 6"
RX0512XX	4‘- 6"

NOTES:
-KIT INCLUDES ALL MOUNTING HARDWARE & EXTENSION RACK

Specifications subject to change. Please contact CSF Customer Service for more information.
© copyright 2004 Central Steel Fabricators, Inc.
http://www.centralsteelfab.com ◆ 2100 Parkes Drive, Broadview, IL 60155
Phone: 708-652-2037 Fax: 708-652-7010

RX0600 Series EXTENSION RACK KIT

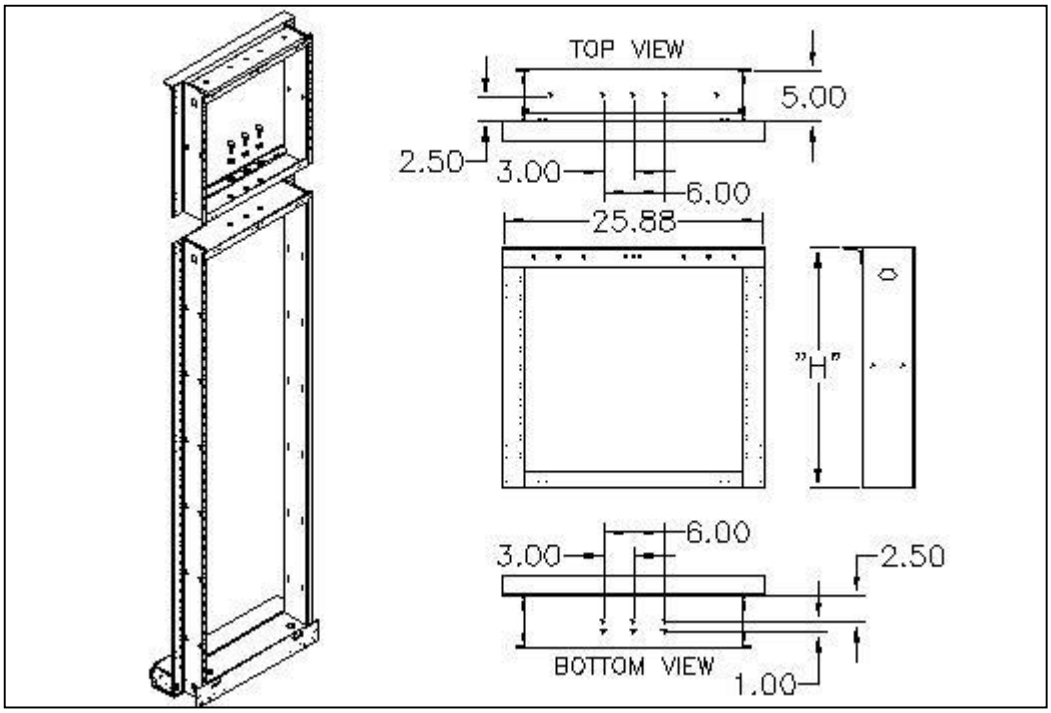

CSF#	H
RX0600XX	1'-0"
RX0601XX	1'-6"
RX0602XX	2'-0"
RX0603XX	2'-6"
RX0607XX	3'-6"
RX0612XX	4'-6"

NOTES:
- KIT INCLUDES ALL MOUNTING HARDWARE & EXTENSION RACK
- FINISHES: SEE TECH DATA FOR PAINT CODES
- OTHER SIZES AND FINISHES AVAILABLE UPON REQUEST

Specifications subject to change. Please contact CSF Customer Service for more information.
© copyright 2004 Central Steel Fabricators, Inc.
http://www.centralsteelfab.com ◆ 2100 Parkes Drive, Broadview, IL 60155
Phone: 708-652-2037 Fax: 708-652-7010

RX1100 Series EXTENSION RACK KIT

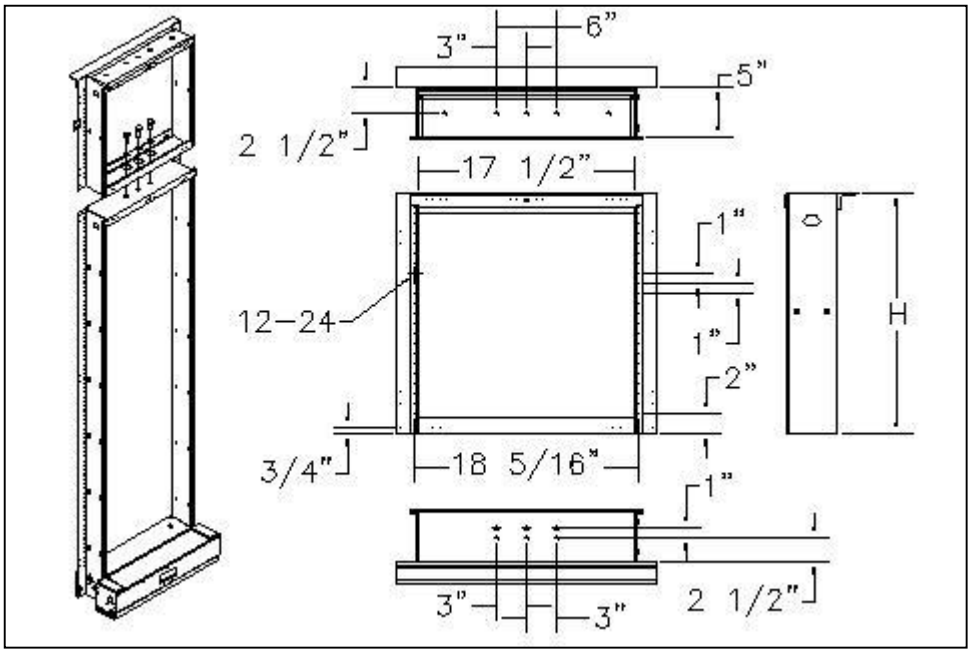

CSF#	H
RX1100XX	1‘-0”
RX1101XX	1‘- 6"
RX1101XX	2‘-0”
RX1103XX	2‘- 6"
RX1107XX	3‘- 6"
RX1112XX	4‘- 6"

NOTES:
-KIT INCLUDES ALL MOUNTING HARDWARE & EXTENSION RACK

Specifications subject to change. Please contact CSF Customer Service for more information.
© copyright 2004 Central Steel Fabricators, Inc.
http://www.centralsteelfab.com ◆ 2100 Parkes Drive, Broadview, IL 60155
Phone: 708-652-2037 Fax: 708-652-7010

RX1200 Series EXTENSION RACK KIT

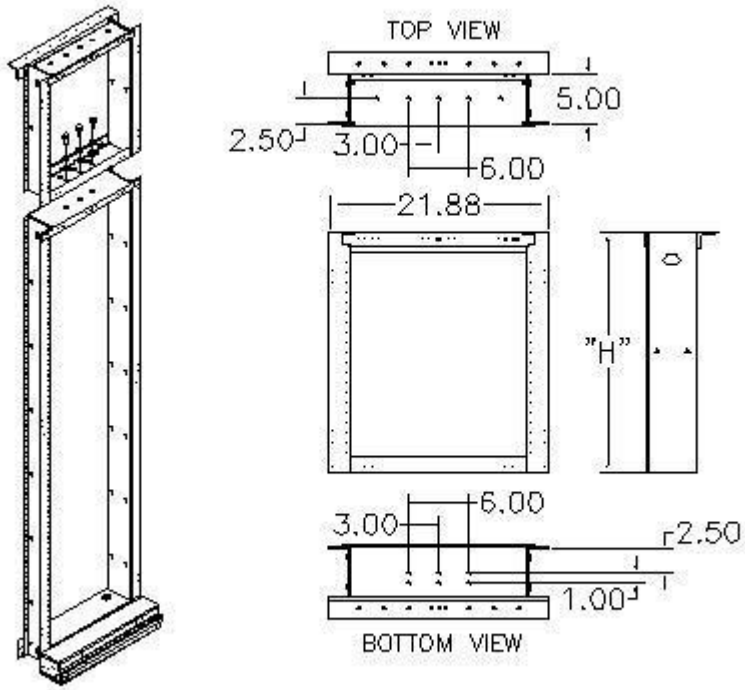

CSF#	H
RX1200XX	1'-0"
RX1201XX	1'-6"
RX1202XX	2'-0"
RX1203XX	2'-6"
RX1207XX	3'-6"
RX1212XX	4'-6"

NOTES:
- KIT INCLUDES ALL MOUNTING HARDWARE & EXTENSION RACK
- FINISHES: SEE TECH DATA FOR PAINT CODES
- OTHER SIZES AND FINISHES AVAILABLE UPON REQUEST

Specifications subject to change. Please contact CSF Customer Service for more information.
© copyright 2004 Central Steel Fabricators, Inc.
http://www.centralsteelfab.com ◆ 2100 Parkes Drive, Broadview, IL 60155
Phone: 708-652-2037 Fax: 708-652-7010

RX14XX Series EXTENSION RACK KIT

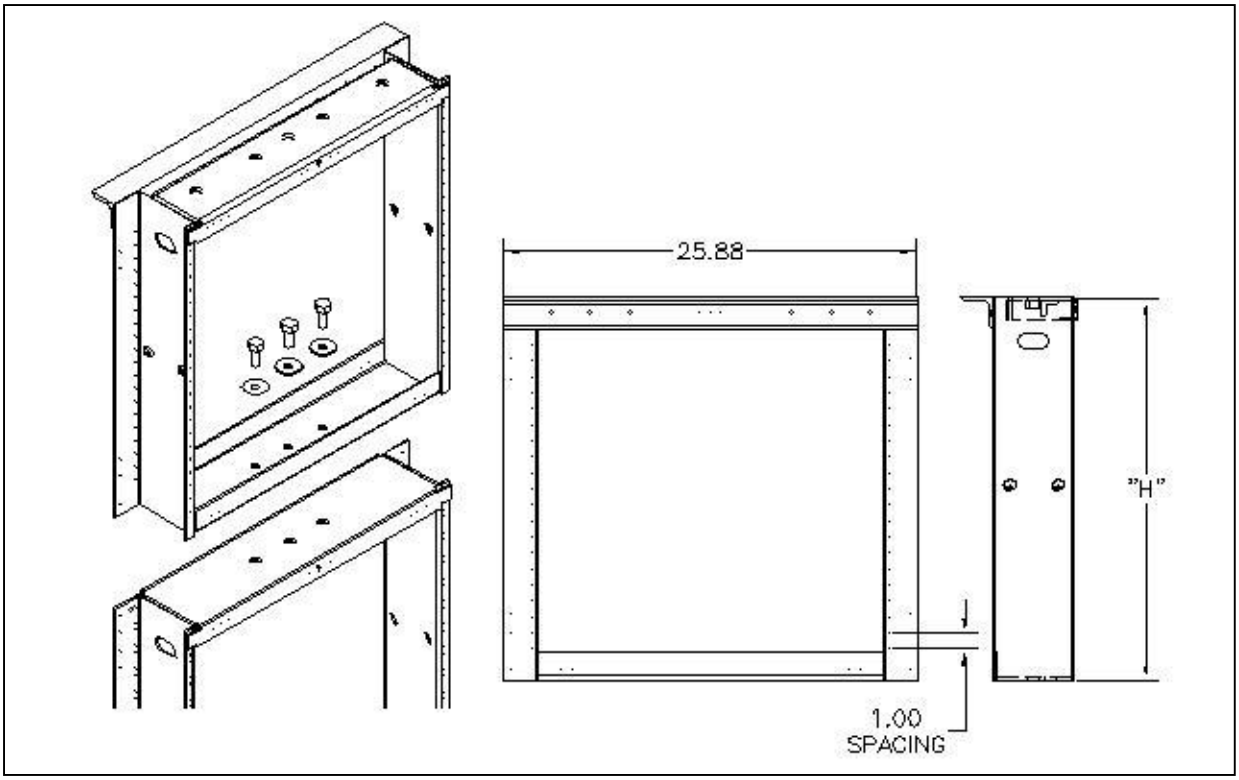

CSF#	H
RX1402XX	2‘-0”
RX1412XX	4‘- 6"

NOTES:
-KIT INCLUDES ALL MOUNTING HARDWARE & EXTENSION RACK
-FINISH: SEE TECH DATA FOR PAINT CODES
-OTHER SIZES AND FINISHES AVAILABLE UPON REQUEST

RVSD*0711

Specifications subject to change. Please contact CSF Customer Service for more information.

© copyright 2004 Central Steel Fabricators, Inc.
http://www.centralsteelfab.com ◆ 2100 Parkes Drive, Broadview, IL 60155
Phone: 708-652-2037 Fax: 708-652-7010

RX1400 Series EXTENSION RACK KIT

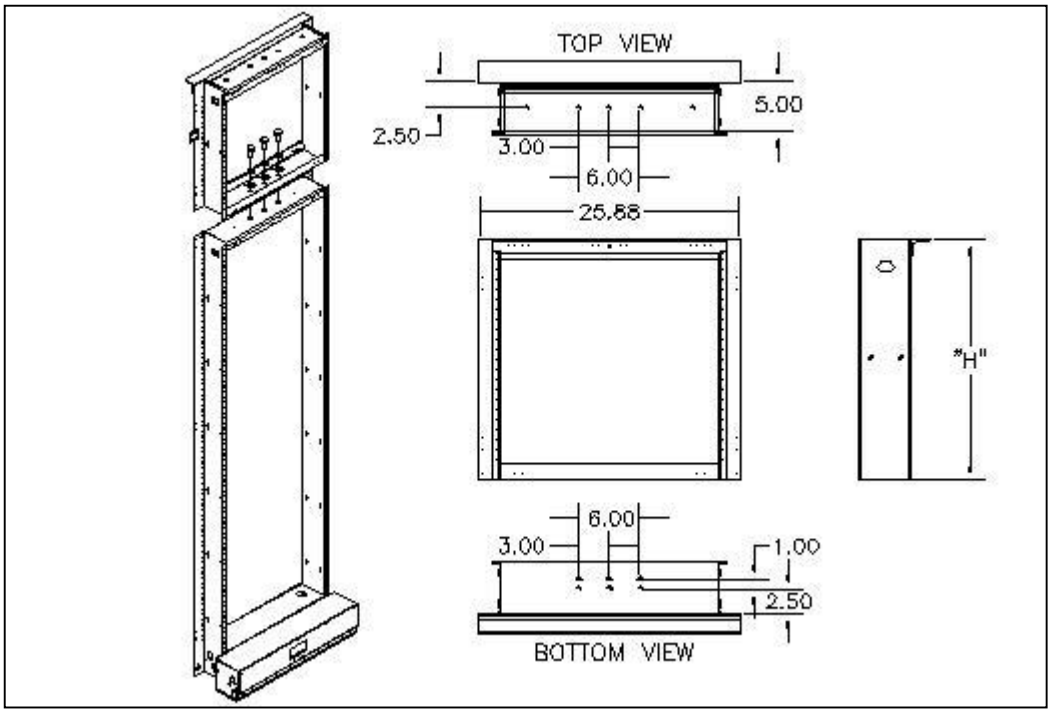

CSF#	H
RX1400XX	1'-0"
RX1401XX	1'-6"
RX1402XX	2'-0"
RX1403XX	2'-6"
RX1407XX	3'-6"
RX1412XX	4'-6"

NOTES:
- KIT INCLUDES ALL MOUNTING HARDWARE & EXTENSION RACK
- FINISHES: SEE TECH DATA FOR PAINT CODES
- OTHER SIZES AND FINISHES AVAILABLE UPON REQUEST

Specifications subject to change. Please contact CSF Customer Service for more information.
© copyright 2004 Central Steel Fabricators, Inc.
http://www.centralsteelfab.com ◆ 2100 Parkes Drive, Broadview, IL 60155
Phone: 708-652-2037 Fax: 708-652-7010

RXE04XXXX Series SEISMIC EXTENDER RACK KIT 19.00”

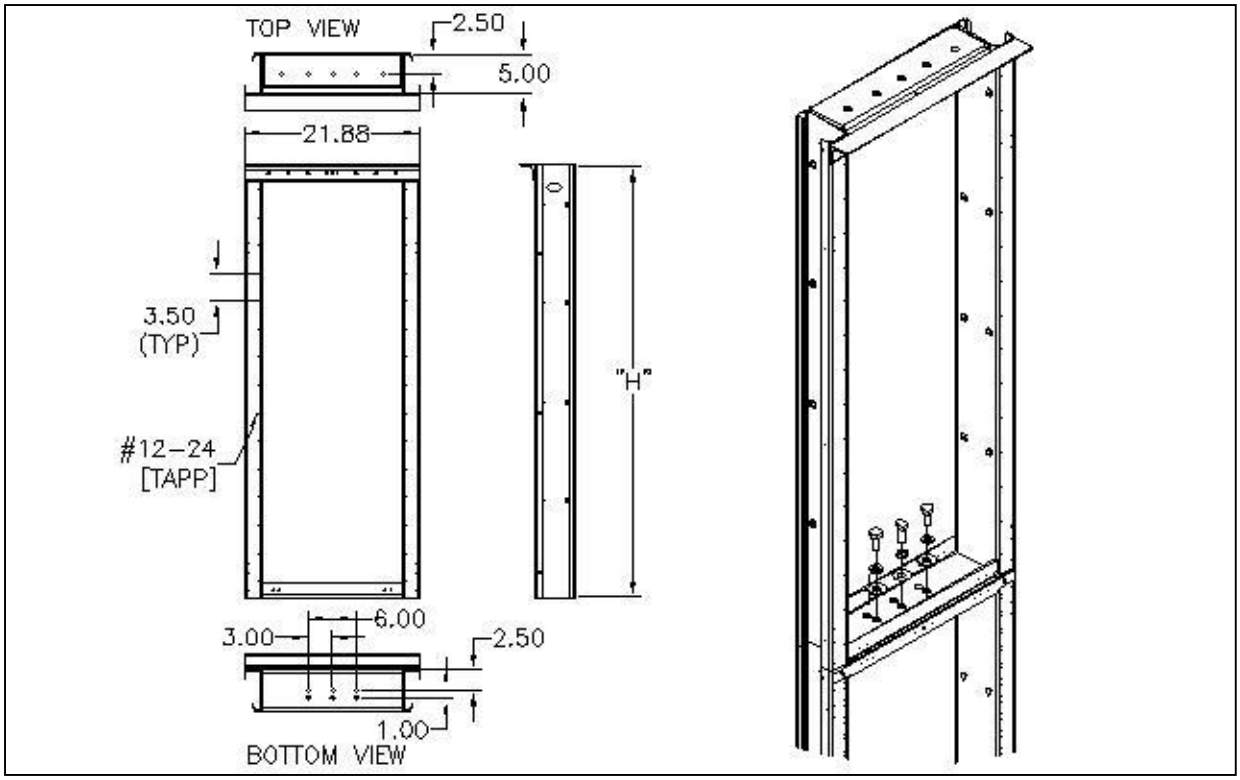

CSF#	HEIGHT “H”
RXE0402XX	24.00"
RXE0412XX	54.00"

NOTES:
- KIT INCLUDES ALL MOUNTING HARDWARE & EXTENSION RACK
- FINISHES: SEE TECH DATA FOR PAINT CODES
- OTHER SIZES AND FINISHES AVAILABLE UPON REQUEST

Specifications subject to change. Please contact CSF Customer Service for more information.
© copyright 2004 Central Steel Fabricators, Inc.
http://www.centralsteelfab.com ◆ 2100 Parkes Drive, Broadview, IL 60155
Phone: 708-652-2037 Fax: 708-652-7010

RXE16XXXX Series SEISMIC EXTENDER RACK KIT 23”

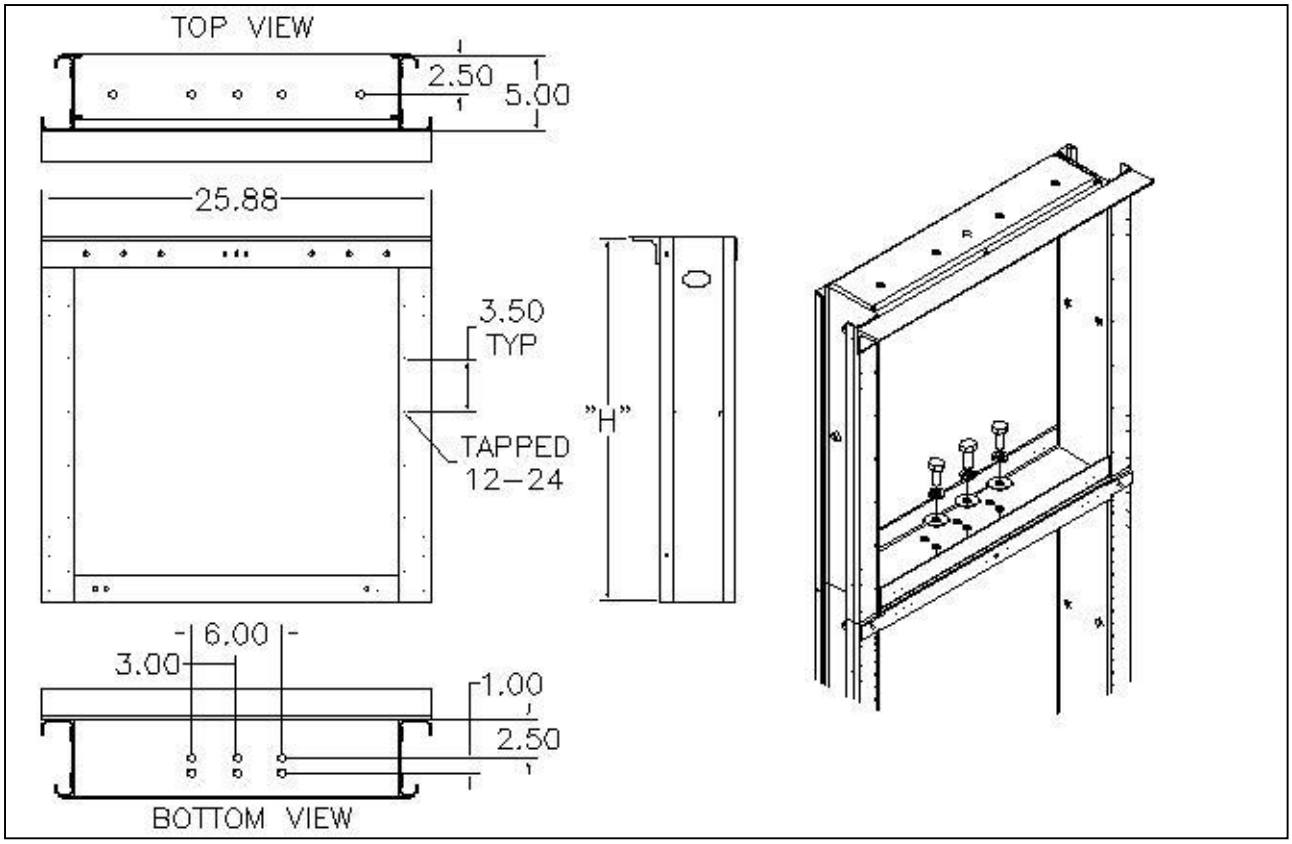

CSF#	HEIGHT “H”
RXE1602XX	24.00"
RXE1612XX	54.00"

NOTES:
- KIT INCLUDES ALL MOUNTING HARDWARE & EXTENSION RACK
- FINISHES: SEE TECH DATA FOR PAINT CODES
- OTHER SIZES AND FINISHES AVAILABLE UPON REQUEST

Specifications subject to change. Please contact CSF Customer Service for more information.
© copyright 2004 Central Steel Fabricators, Inc.
http://www.centralsteelfab.com ◆ 2100 Parkes Drive, Broadview, IL 60155
Phone: 708-652-2037 Fax: 708-652-7010

RG3XXXXX Series

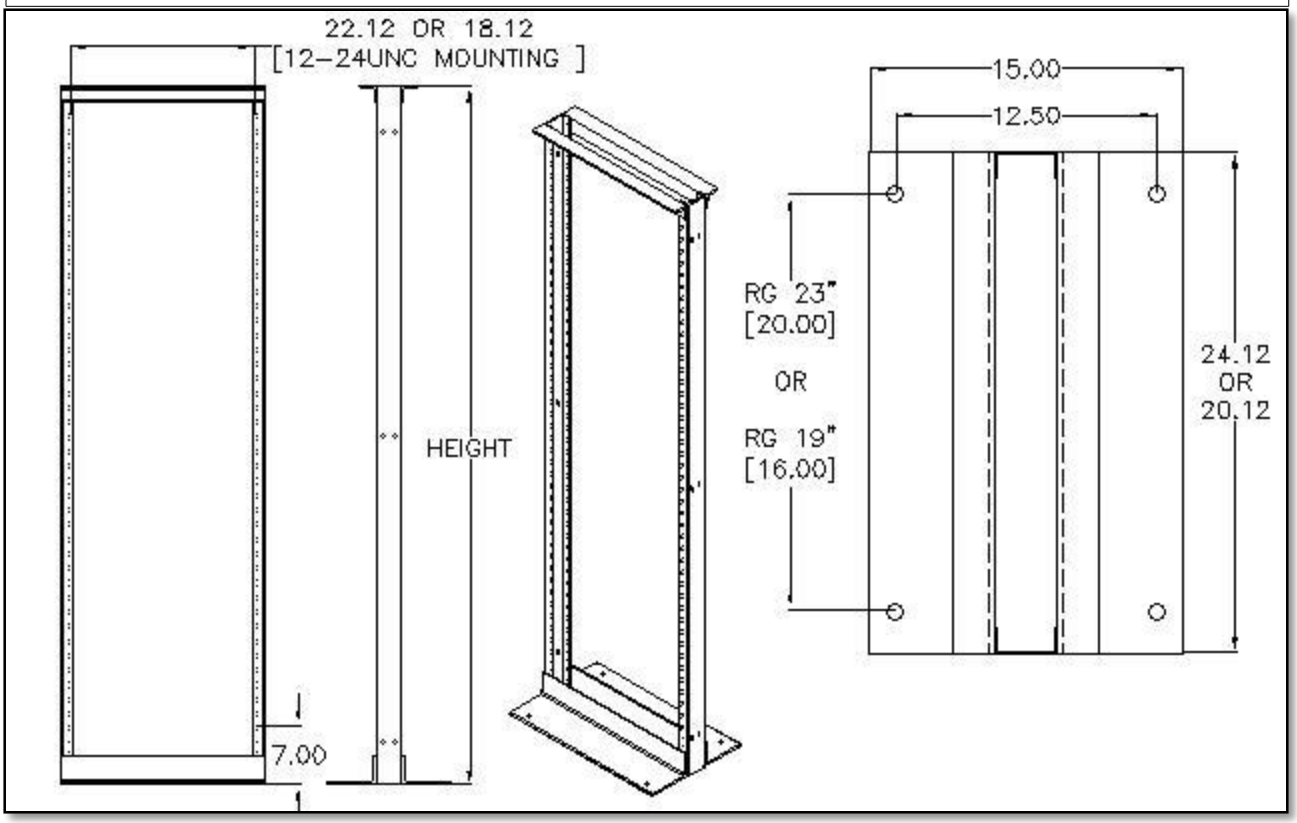

1.75" HOLE SPACING DOUBLE SIDED				
19"			23"	
WELDED	BOLTED	H	WELDED	BOLTED
RG0425XX-2	RG0525XX-2	7‘-0”	RG3025XX	RG3125XX

5/8" HOLE SPACING DOUBLE SIDED				
19"			23"	
WELDED	BOLTED	H	WELDED	BOLTED
RG3625XX	RG3725XX	7‘-0”	RG3825XX	RG3925XX

NOTES:
-KIT INCLUDES ALL MOUNTING HARDWARE FOR SPECIFIED SIZES & FORMED RELAY RACK
-COLOR CODE = XX

RVSD*0613

Specifications subject to change. Please contact CSF Customer Service for more information.

© copyright 2004 Central Steel Fabricators, Inc.
http://www.centralsteelfab.com ◆ 2100 Parkes Drive, Broadview, IL 60155
Phone: 708-652-2037 Fax: 708-652-7010

RG Series – Formed Relay Rack

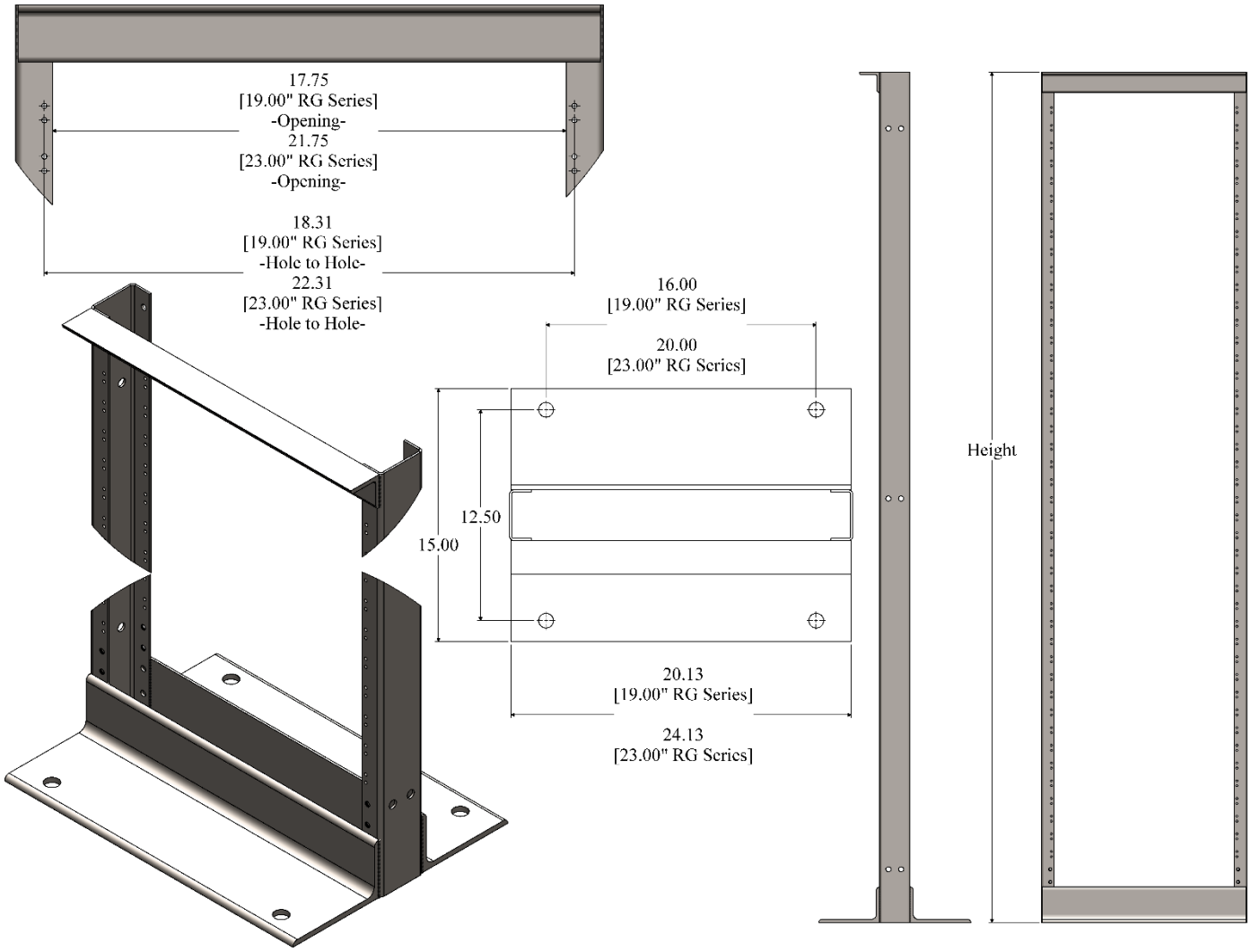

1.75" Hole Spacing Double Sided				
19.00“ Formed Relay Rack			23.00“ Formed Relay Rack	
Welded	Bolted	Height	Welded	Bolted
RG0425XX	RG0525XX	7‘-0”	RG0625XX	RG0725XX

Notes:
- Order floor anchoring and top support hardware separately.
- For connecting hardware order P/N# RF3101
- Other heights available: contact sales@centralsteelfab.com

RVSD*1017

Specifications subject to change. Please contact CSF Customer Service for more information.
© copyright 2004 Central Steel Fabricators, Inc.
http://www.centralsteelfab.com ◆ 2100 Parkes Drive, Broadview, IL 60155
Phone: 708-652-2037 Fax: 708-652-7010

RGxx25 Series – Formed Relay Rack

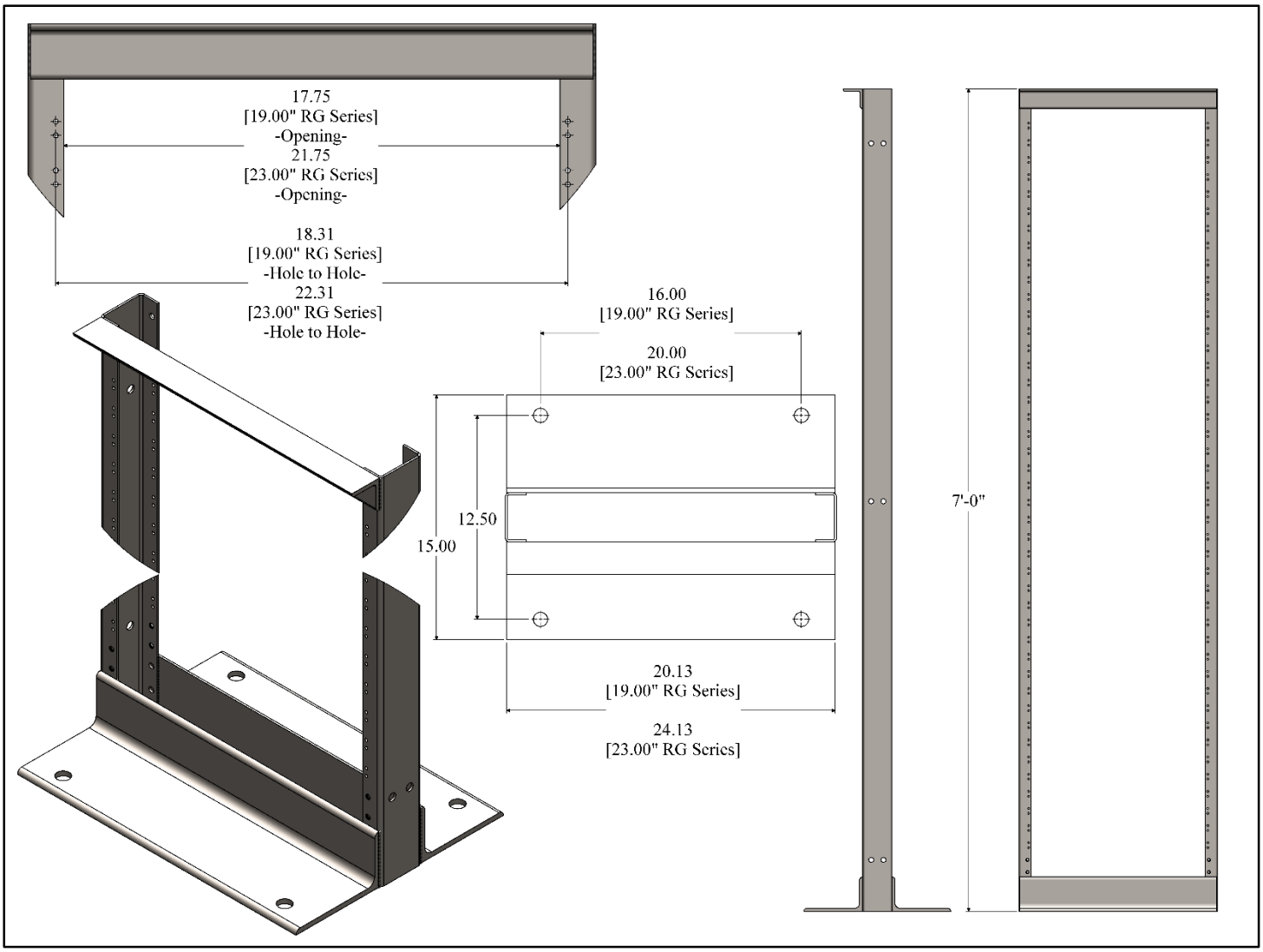

1.75" Hole Spacing Double Sided				
19.00“ Formed Relay Rack			23.00“ Formed Relay Rack	
Welded	Bolted	Height	Welded	Bolted
RG0425XX	RG0525XX	7‘-0”	RG0625XX	RG0725XX

Notes:
- Order floor anchoring and top support hardware separately.
- For connecting hardware order P/N# RF3101
- Other heights available: contact sales@centralsteelfab.com

RVSD*1017

Specifications subject to change. Please contact CSF Customer Service for more information.
© copyright 2004 Central Steel Fabricators, Inc.
http://www.centralsteelfab.com ◆ 2100 Parkes Drive, Broadview, IL 60155
Phone: 708-652-2037 Fax: 708-652-7010

RGXX30 Series – Formed Relay Rack

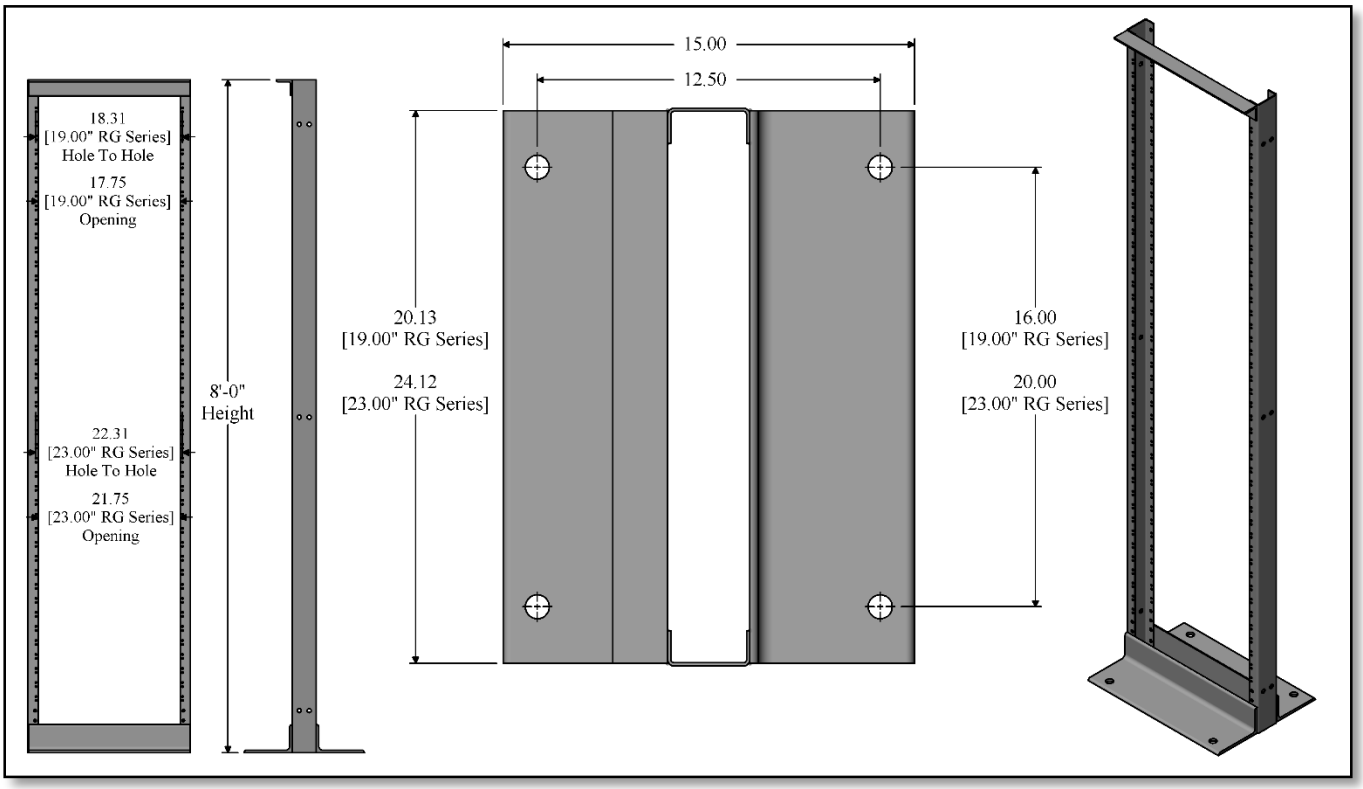

1.75" Hole Spacing Double Sided				
19.00“ Formed Relay Rack			23.00“ Formed Relay Rack	
Welded	Bolted	Height	Welded	Bolted
RG0430XX	RG0530XX	8‘-0”	RG0630XX	RG0730XX

Notes:

- Order Floor Anchoring and Top Support Hardware separately.
- For Connecting Hardware order P/N# RF3101

RVSD*0417

Specifications subject to change. Please contact CSF Customer Service for more information.

© copyright 2004 Central Steel Fabricators, Inc.
http://www.centralsteelfab.com ◆ 2100 Parkes Drive, Broadview, IL 60155
Phone: 708-652-2037 Fax: 708-652-7010

RGXX35 Series – Formed Relay Rack

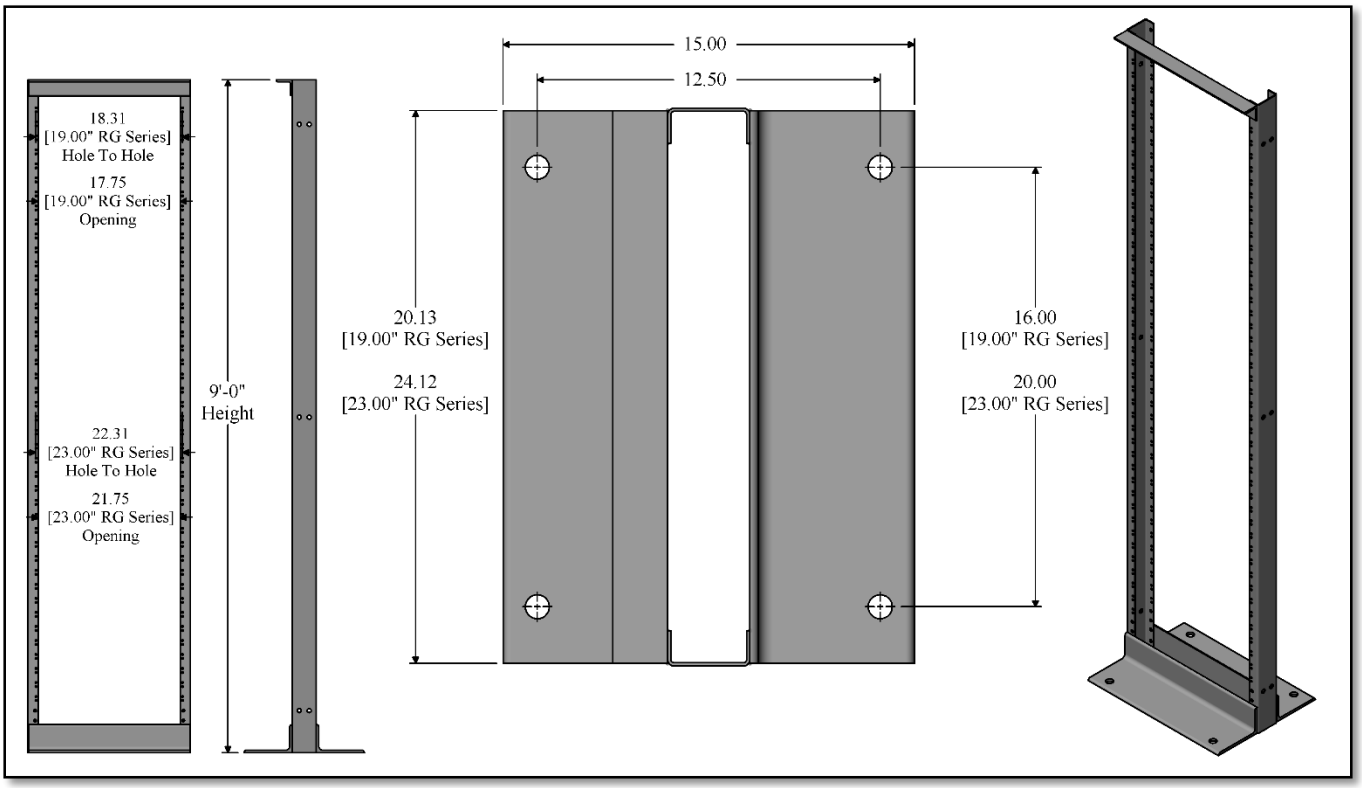

1.75" Hole Spacing Double Sided				
19.00“ Formed Relay Rack			23.00“ Formed Relay Rack	
Welded	Bolted	Height	Welded	Bolted
RG0435XX	RG0535XX	9‘-0”	RG0635XX	RG0735XX

Notes:

- Order Floor Anchoring and Top Support Hardware separately.
- For Connecting Hardware order P/N# RF3101

RVSD*0417

Specifications subject to change. Please contact CSF Customer Service for more information.

© copyright 2004 Central Steel Fabricators, Inc.
http://www.centralsteelfab.com ◆ 2100 Parkes Drive, Broadview, IL 60155
Phone: 708-652-2037 Fax: 708-652-7010

RGXX47 Series – Formed Relay Rack

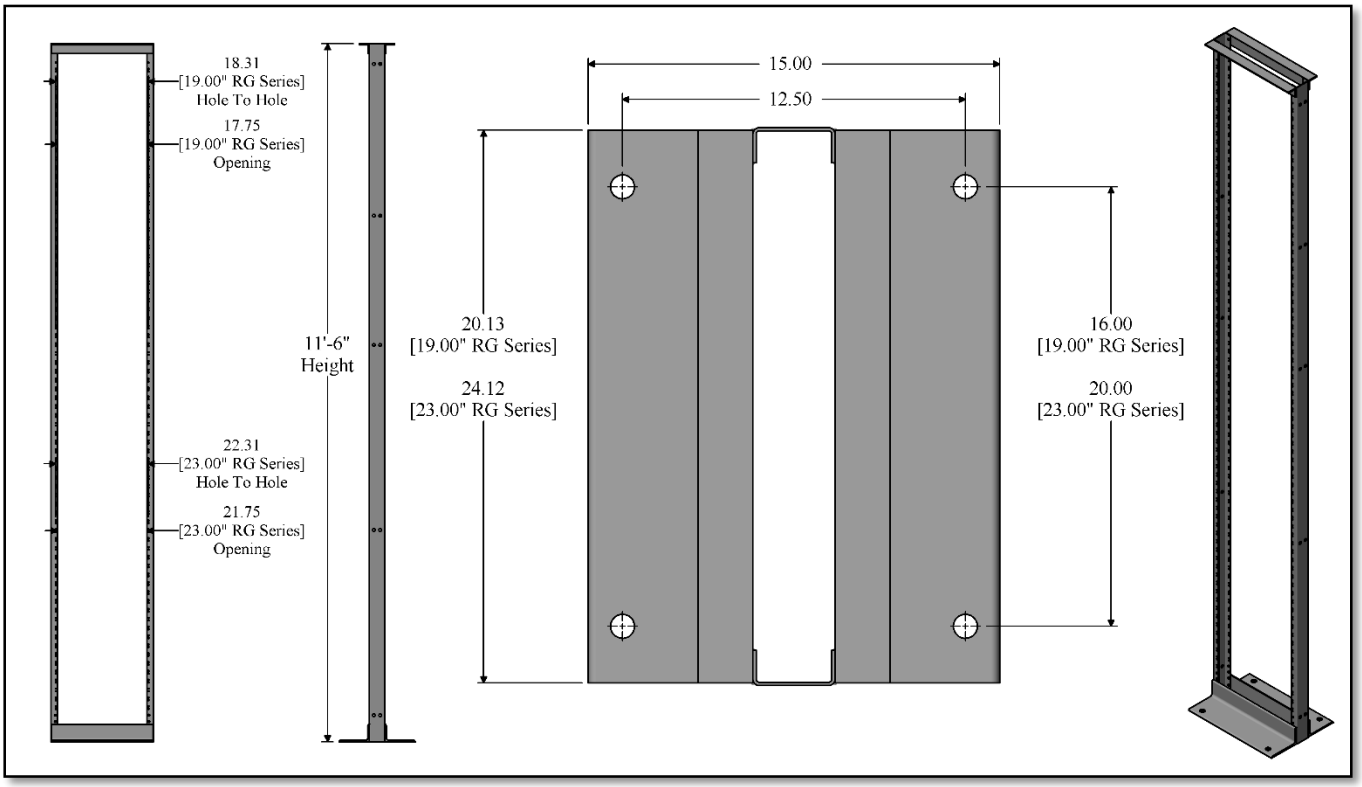

1.75" Hole Spacing Double Sided				
19.00“ Formed Relay Rack			23.00“ Formed Relay Rack	
Welded	Bolted	Height	Welded	Bolted
RG2847XX	RG2947XX	11‘-6”	RG3047XX	RG3147XX

NOTES:

- Order Floor Anchoring and Top Support Hardware separately.
- For Connecting Hardware order P/N# RF3101

Specifications subject to change. Please contact CSF Customer Service for more information.

© copyright 2004 Central Steel Fabricators, Inc.

http://www.centralsteelfab.com ◆ 2100 Parkes Drive, Broadview, IL 60155
Phone: 708-652-2037 Fax: 708-652-7010

RS Series GATED RELAY RACK

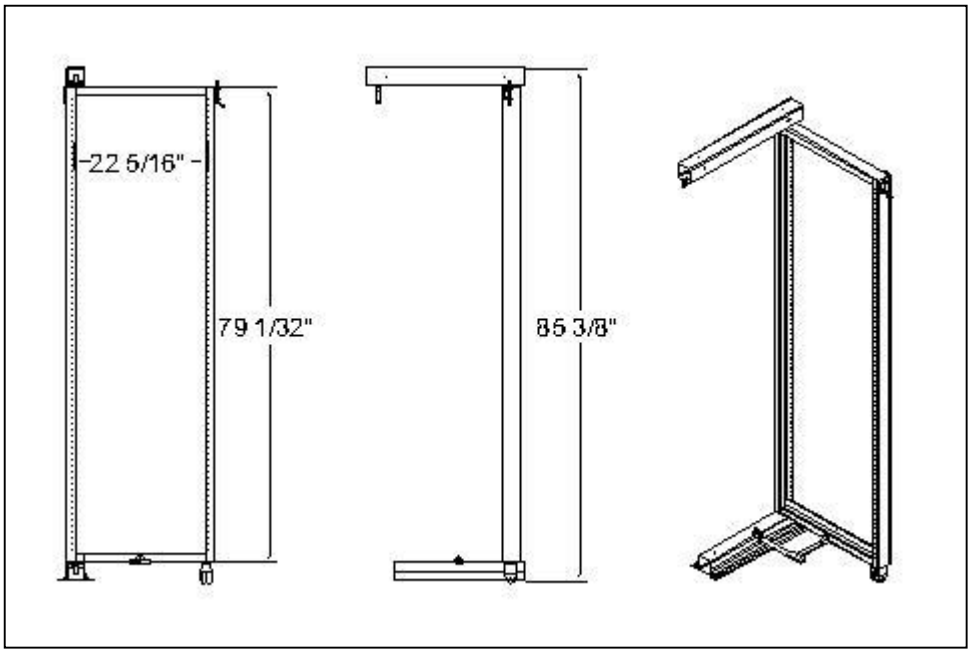

CSF#
RS0625XX

NOTES:
- RACK CAN BE ASSEMBLED TO SWING RIGHT OR LEFT

Specifications subject to change. Please contact CSF Customer Service for more information.
© copyright 2004 Central Steel Fabricators, Inc.
http://www.centralsteelfab.com ◆ 2100 Parkes Drive, Broadview, IL 60155 ◆
Phone: 708-652-2037 Fax: 708-652-7010

GRA Series GUARD RAIL ADAPTER

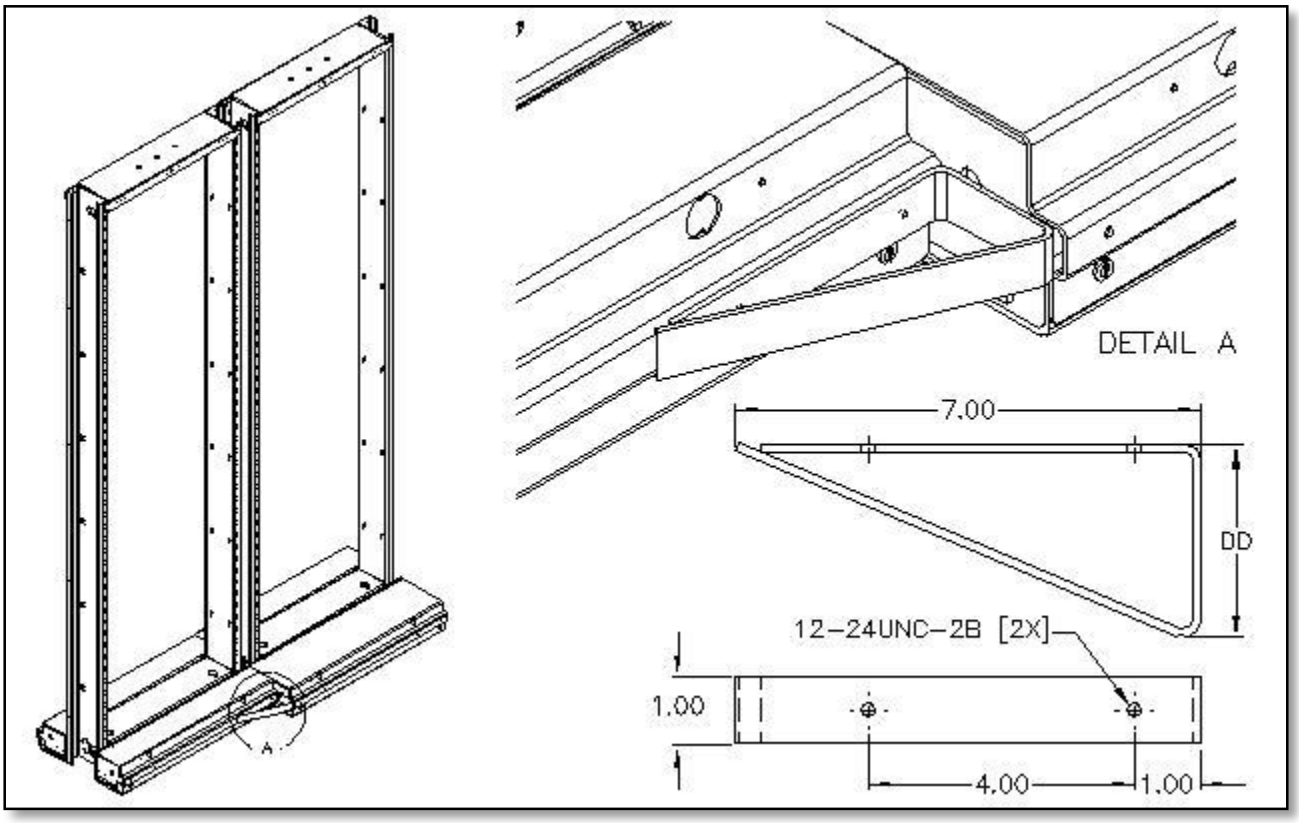

CSF #	W	CSF #	W
GRA01XX	1.00"	GRA08XX	8.00"
GRA02XX	2.00"	GRA09XX	9.00"
GRA03XX	3.00"	GRA10XX	10.00"
GRA04XX	4.00"	GRA11XX	11.00"
GRA05XX	5.00"	GRA12XX	12.00"
GRA06XX	6.00"	GRA13XX	13.00"
GRA07XX	7.00"	GRA15XX	15.00"

NOTES:

- KIT INCLUDES ALL MOUNTING HARDWARE & GUARD RAIL ADAPTER

Specifications subject to change. Please contact CSF Customer Service for more information.
© copyright 2004 Central Steel Fabricators, Inc.
http://www.centralsteelfab.com ◆ 2100 Parkes Drive, Broadview, IL 60155
Phone: 708-652-2037 Fax: 708-652-7010

GRB Series GUARD RAIL BUMPER

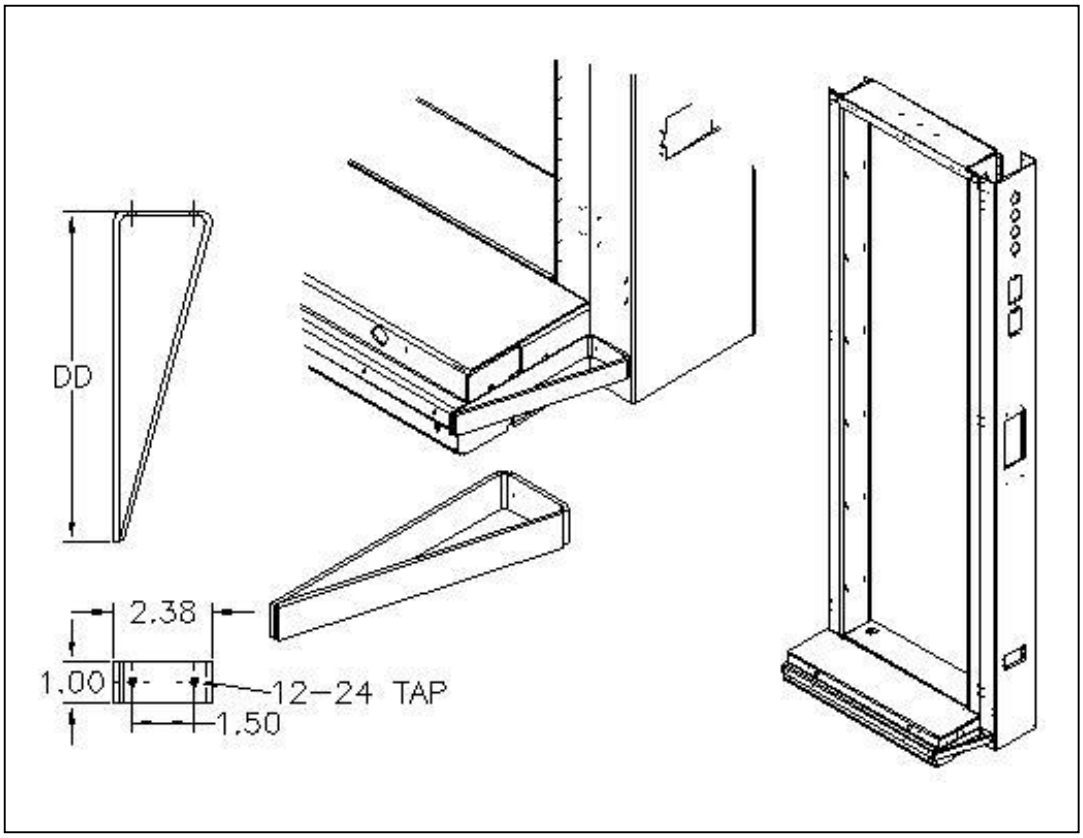

CSF #	W	CSF #	W
GRB01XX	1.00"	GRB11XX	11.00"
GRB02XX	2.00"	GRB12XX	12.00"
GRB03XX	3.00"	GRB13XX	13.00"
GRB04XX	4.00"	GRB15XX	15.00"
GRB05XX	5.00"	GRB16XX	16.00"
GRB06XX	6.00"	GRB17XX	17.00"
GRB07XX	7.00"	GRB18XX	18.00"
GRB08XX	8.00"	GRB20XX	20.00"
GRB09XX	9.00"	GRB25XX	25.00"
GRB10XX	10.00"		

NOTES:

- KIT INCLUDES ALL MOUNTING HARDWARE & GUARD RAIL BUMPER

Specifications subject to change. Please contact CSF Customer Service for more information.

© copyright 2004 Central Steel Fabricators, Inc.
http://www.centralsteelfab.com ◆ 2100 Parkes Drive, Broadview, IL 60155
Phone: 708-652-2037 Fax: 708-652-7010

GRE Series GUARD RAIL EXTENTION

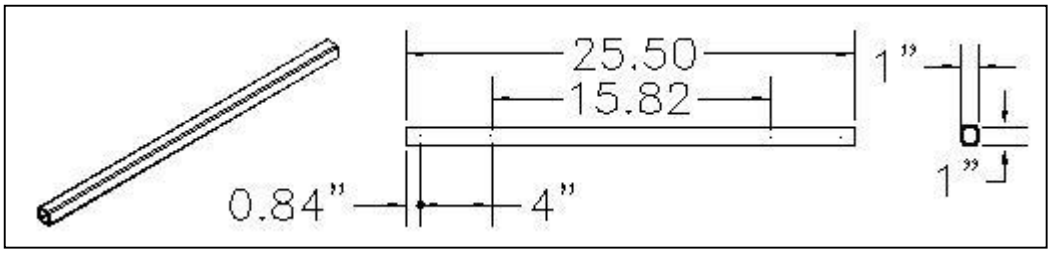

CSF #	W
GRE01XX	1.00"
GRE02XX	2.00"
GRE03XX	3.00"

NOTES:
- KIT INCLUDES ALL MOUNTING HARDWARE & GUARD RAIL ADAPTER

Specifications subject to change. Please contact CSF Customer Service for more information.
© copyright 2004 Central Steel Fabricators, Inc.
http://www.centralsteelfab.com ◆ 2100 Parkes Drive, Broadview, IL 60155 ◆
Phone: 708-652-2037 Fax: 708-652-7010

GRT Series GUARD RAIL TRANSITION

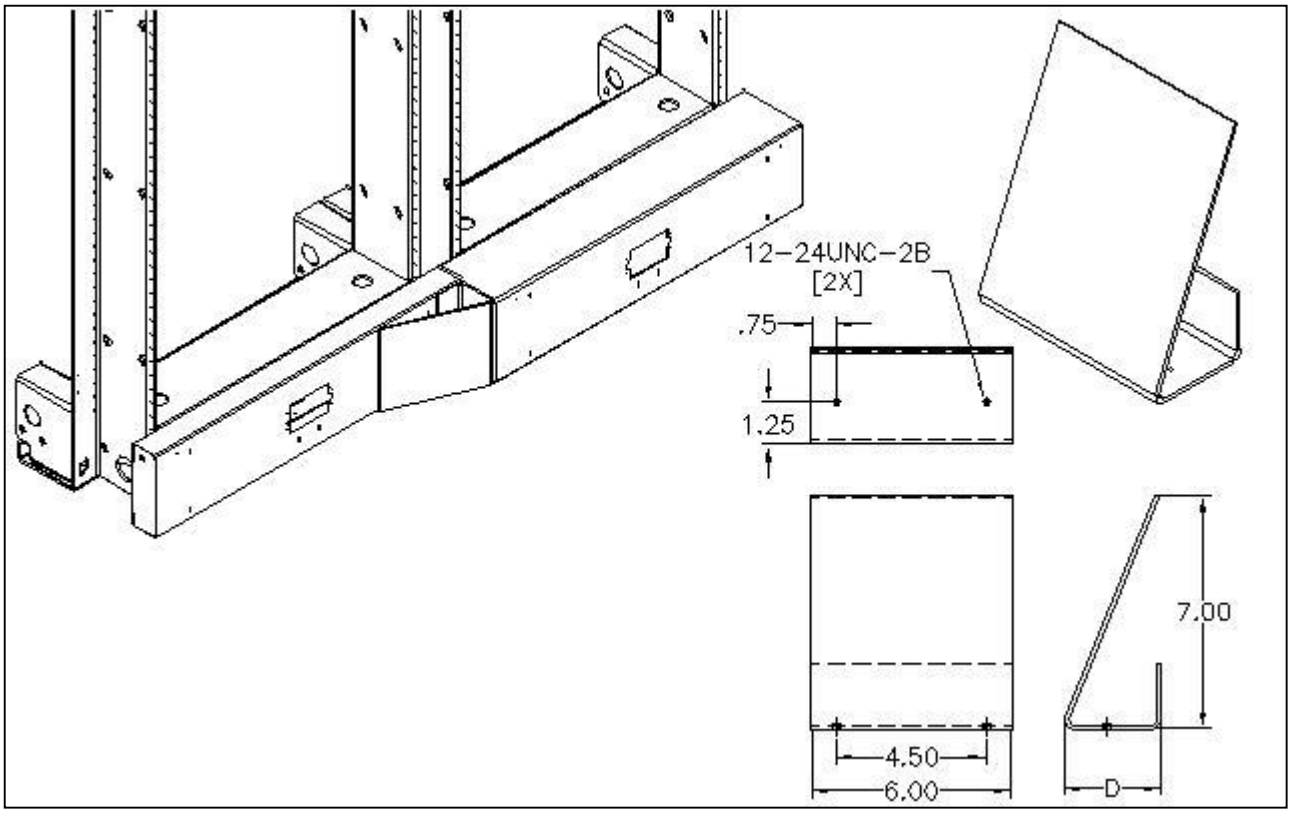

CSF #	D
GRT01XX	1.00"
GRT02XX	2.00"
GRT03XX	3.00"
GRT04XX	4.00"
GRT05XX	5.00"
GRT06XX	6.00"
GRT07XX	7.00"
GRT08XX	8.00"
GRT09XX	9.00"
GRT10XX	10.00"

CSF #	D
GRT11XX	11.00"
GRT12XX	12.00"
GRT15XX	15.00"
GRT16XX	16.00"
GRT18XX	18.00"
GRT19XX	19.00"
GRT20XX	20.00"

NOTES:

- KIT INCLUDES ALL MOUNTING HARDWARE & GUARD RAIL TRANSITION
- OTHER DEPTHS AVAILABLE UPON REQUEST

RVSD*0911

Specifications subject to change. Please contact CSF Customer Service for more information.

© copyright 2004 Central Steel Fabricators, Inc.
http://www.centralsteelfab.com ◆ 2100 Parkes Drive, Broadview, IL 60155
Phone: 708-652-2037 Fax: 708-652-7010

ISS888CL – Insulation Strip for Network Bays

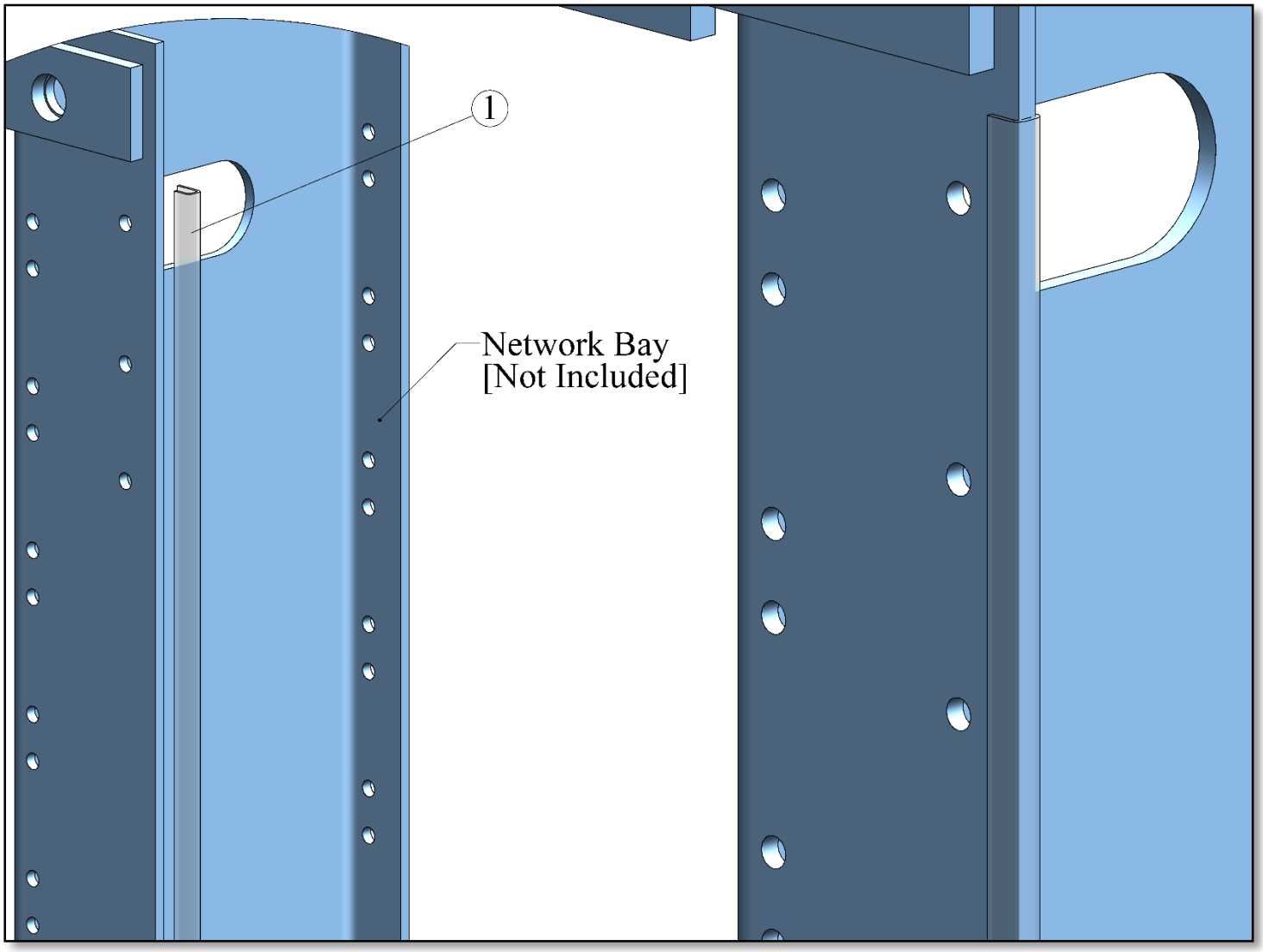

ISS888CL – Insulation Strip For Network Bays				
Item	CSF#	Color	Description	Length
1	ISS888CL	Clear	Insulation Strip For Network Bays	42.00”

Material: Meets or exceeds UL flammability requirement UL 94 V-1

RVSD*1117

Specifications subject to change. Please contact CSF Customer Service for more information.

© copyright 2004 Central Steel Fabricators, Inc.
http://www.centralsteelfab.com ◆ 2100 Parkes Drive, Broadview, IL 60155
Phone: 708-652-2037 Fax: 708-652-7010

RNP Series BLANK AND AC POWER STRIPS

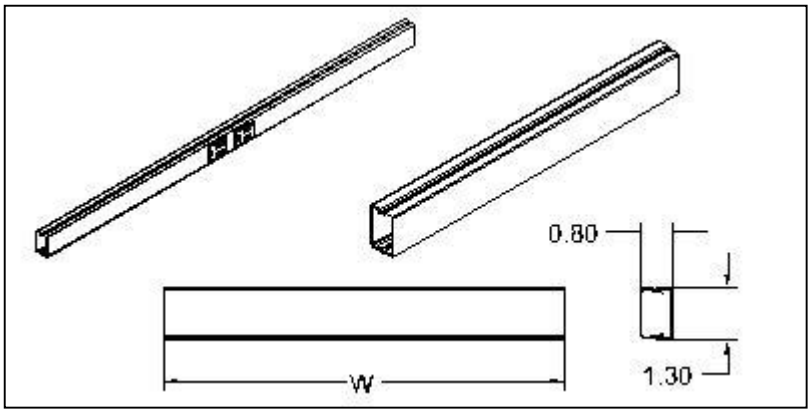

AC POWER STRIP WITH OUTLETS	
CSF#	W
RNPS19XXK	21.88"
RNPS23XXK	25.88"

BLANK POWER STRIPS	
CSF#	W
RNPB01XXK	2"
RNPB02XXK	2.38"
RNPB05XXK	4.88"
RNPB07XXK	7.38"
RNPB10XXK	9.88"
RNPB19XXK	21.88"
RNPB23XXK	25.88"

NOTES:
- KIT INCLUDES ALL MOUNTING HARDWARE
- THE 22" IS FOR A 19" BAY AND A 26" IS FOR A 23" BAY

Specifications subject to change. Please contact CSF Customer Service for more information.
© copyright 2004 Central Steel Fabricators, Inc.
http://www.centralsteelfab.com ◆ 2100 Parkes Drive, Broadview, IL 60155
Phone: 708-652-2037 Fax: 708-652-7010

RNPS19XXK - AC POWER STRIP SERIES

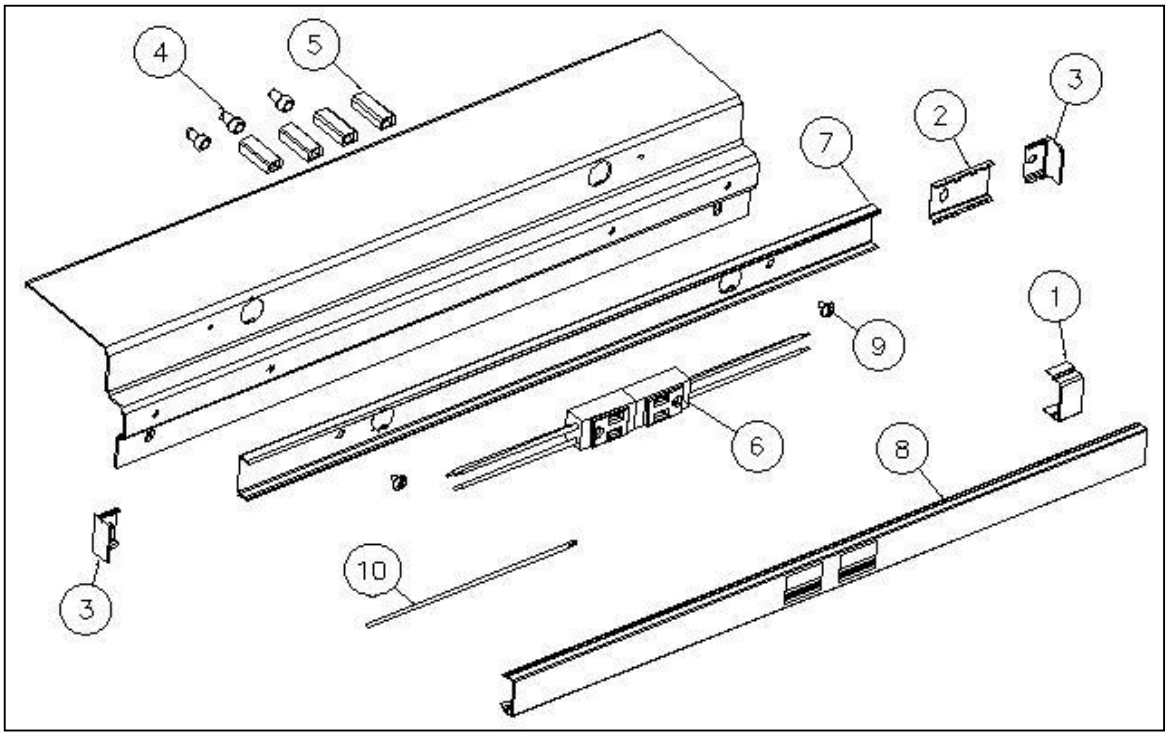

ITEM#	CSF#	QTY	DESCRIPTION
1	WMV2006	1	WIREMOLD COVER CLIP
2	WM2001	1	WIREMOLD COUPLING
3	WMV2010B	2	WIREMOLD BLANK END FITTING
4	PANJN418	3	PANDUIT JN418-212-X PRESSURE CONNECTOR
5	WMW30	2	WIREMOLD PRESSURE TERM CONNECTOR
6	WMS2D30	1	WIREMOLD DUPLEX STRIP 30”
7	RNPB19-BASE	1	WIREMOLD 19” BASE
8	RNPS19-COVER	1	WIREMOLD 19” COVER
9	PH0400FST	2	12-24UNC X 14” PH PHIL CUTTING
10	W012S1GRNK	1	#12 SOL GREEN THNN 8” W LUG
11	WMG30	1	WIREMOLD PRESS TERM CONNECTORS / GREEN

NOTES:
- KIT INCLUDES ALL MOUNTING HARDWARE
- THE 22" IS FOR A 19" BAY AND A 26" IS FOR A 23" BAY

Specifications subject to change. Please contact CSF Customer Service for more information.

© copyright 2004 Central Steel Fabricators, Inc.
http://www.centralsteelfab.com ◆ 2100 Parkes Drive, Broadview, IL 60155
Phone: 708-652-2037 Fax: 708-652-7010

RNPS23XXK - AC POWER STRIP SERIES

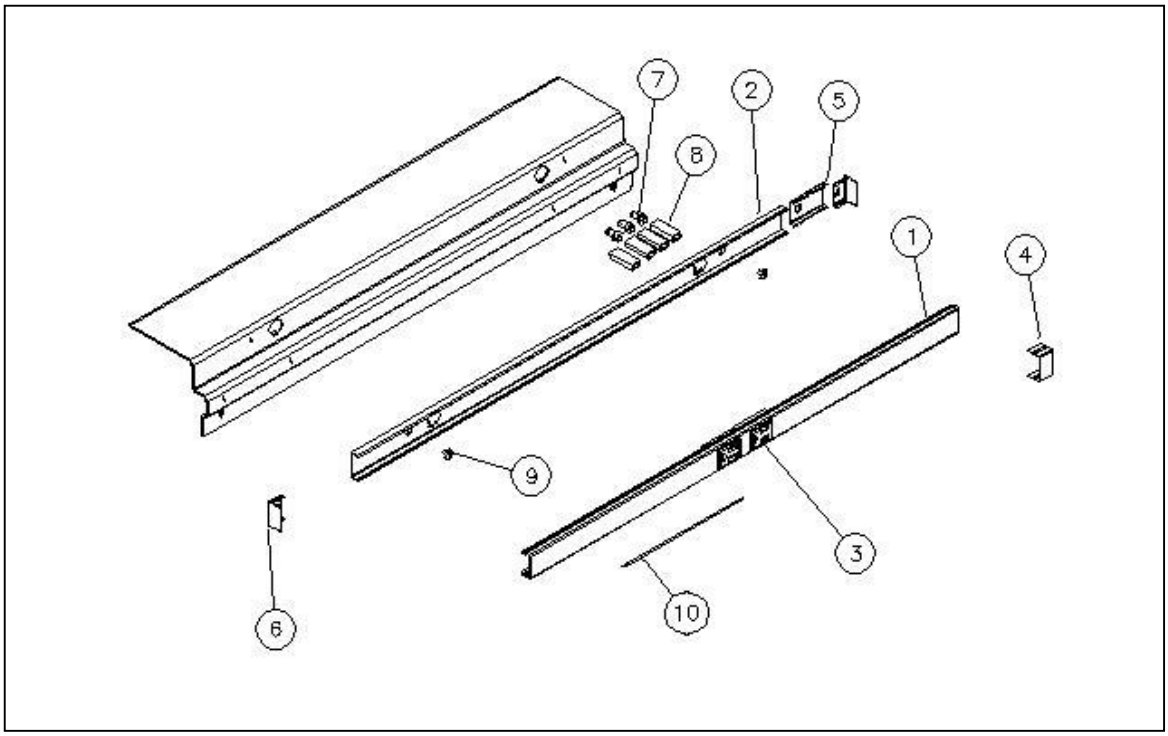

ITEM#	CSF#	QTY	DESCRIPTION
1	RNPS23-COVER	1	WIREMOLD 23” OUTLET COVER
2	RNPB23-BASE	1	WIREMOLD 23” BASE
3	WMS2D30	1	WIREMOLD DUPLEX STRIP 30”
4	WMV2006	1	WIREMOLD COVER CLIP
5	WM2001	1	WIREMOLD COUPLING
6	WMV2010B	2	WIREMOLD BLANK END FITTING
7	PANJN418	3	PANDUIT JN418-212-X PRESSURE CONNECTOR
8	WMW30	2	WIREMOLD PRESSURE TERM CONNECTOR
9	PH0400FST	2	12-24UNC X 14” PH PHIL CUTTING
10	W012S1GRNK	1	#12 SOL GREEN THNN 8” W LUG
11	WMG30	1	WIRE PRESS TERM CONNECTORS / GREEN

NOTES:
- KIT INCLUDES ALL MOUNTING HARDWARE
- THE 22" IS FOR A 19" BAY AND A 26" IS FOR A 23" BAY

Specifications subject to change. Please contact CSF Customer Service for more information.

© copyright 2004 Central Steel Fabricators, Inc.
http://www.centralsteelfab.com ◆ 2100 Parkes Drive, Broadview, IL 60155
Phone: 708-652-2037 Fax: 708-652-7010

RNPB01XXK – BLANK POWER STRIP SERIES

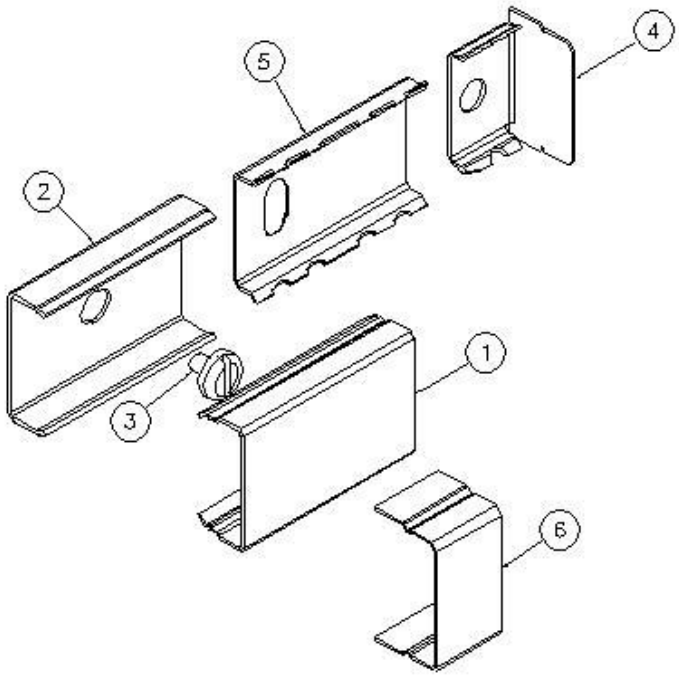

ITEM#	CSF#	QTY	DESCRIPTION
1	RNPB01-COVER	1	WIREMOLD 2.0” COVER
2	RNPB01-BASE	1	WIREMOLD 2.0” BASE
3	PH0400FST	1	12-24UNC X 14” PH PHIL CUTTING
4	WMV2010B	1	WIREMOLD BLANK END FITTING
5	WM2001	1	WIREMOLD COUPLING
6	WMV2006	1	WIREMOLD COVER CLIP

NOTES:
- KIT INCLUDES ALL MOUNTING HARDWARE
- THE 22" IS FOR A 19" BAY AND A 26" IS FOR A 23" BAY

Specifications subject to change. Please contact CSF Customer Service for more information.
© copyright 2004 Central Steel Fabricators, Inc.
http://www.centralsteelfab.com ◆ 2100 Parkes Drive, Broadview, IL 60155
Phone: 708-652-2037 Fax: 708-652-7010

RNPB02XXK – BLANK POWER STRIP SERIES

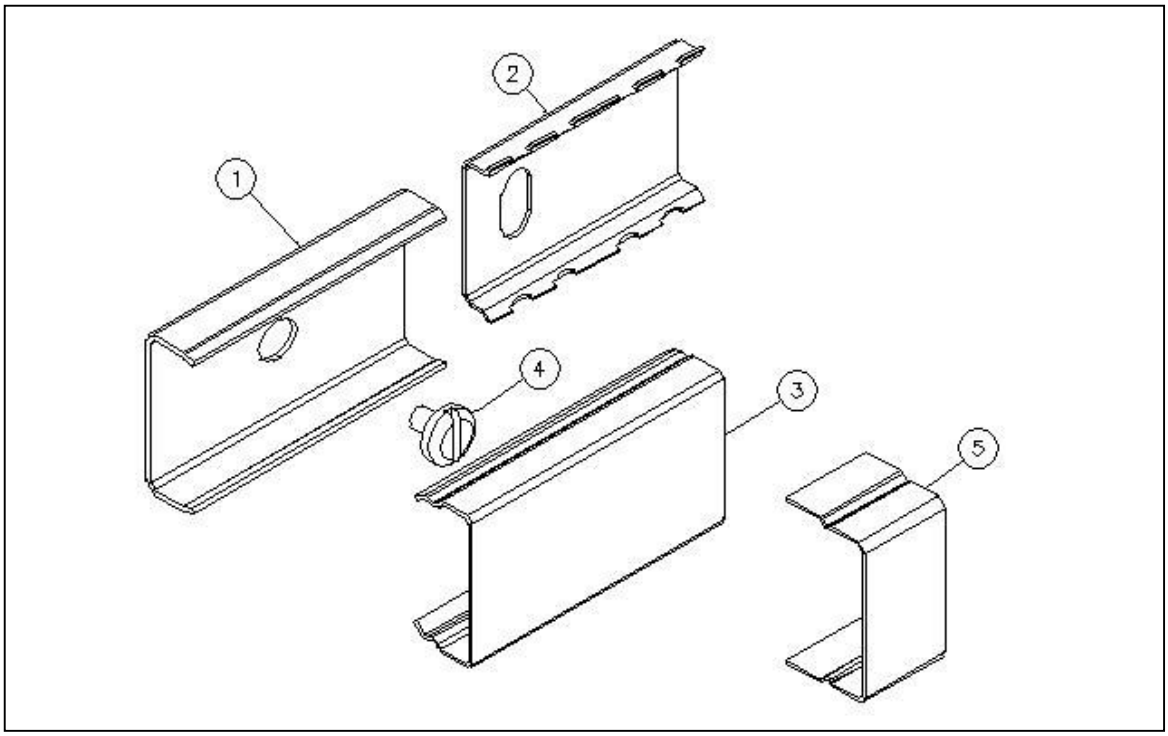

ITEM#	CSF#	QTY	DESCRIPTION
1	RNPB02-BASE	1	WIREMOLD 2.5” BASE
2	WM2001	1	WIREMOLD COUPLING
3	RNPB02-COVER	1	WIREMOLD 2.5” COVER
4	PH0400FST	1	12-24UNC X 14” PH PHIL CUTTING
5	WMV2006	1	WIREMOLD COVER CLIP

NOTES:
- KIT INCLUDES ALL MOUNTING HARDWARE
- THE 22" IS FOR A 19" BAY AND A 26" IS FOR A 23" BAY

Specifications subject to change. Please contact CSF Customer Service for more information.
© copyright 2004 Central Steel Fabricators, Inc.
http://www.centralsteelfab.com ◆ 2100 Parkes Drive, Broadview, IL 60155
Phone: 708-652-2037 Fax: 708-652-7010

RNPB05XXK – BLANK POWER STRIP SERIES

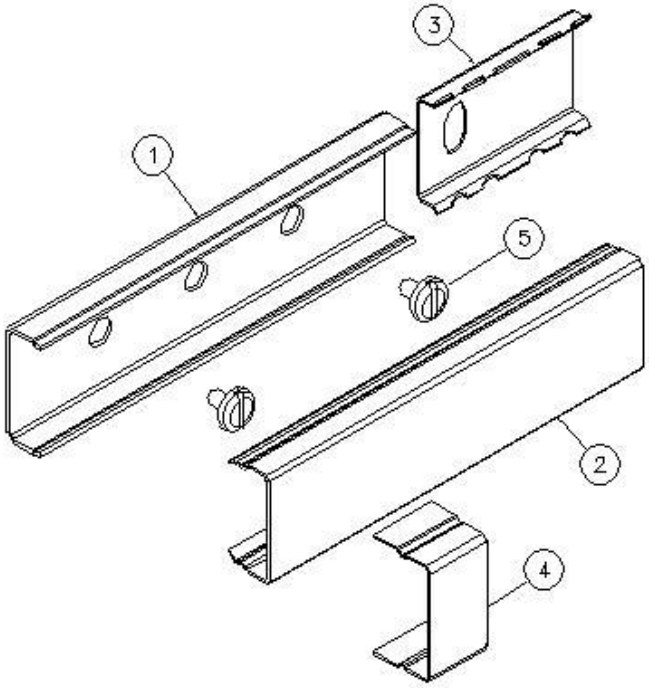

ITEM#	CSF#	QTY	DESCRIPTION
1	RNPB05-BASE	1	WIREMOLD 5.0” BASE
2	RNPB05-COVER	1	WIREMOLD 5.0” COVER
3	WM2001	1	WIREMOLD COUPLING
4	WMV2006	1	WIREMOLD COVER CLIP
5	PH0400FST	2	12-24UNC X 14” PH PHIL CUTTING

NOTES:
- KIT INCLUDES ALL MOUNTING HARDWARE
- THE 22" IS FOR A 19" BAY AND A 26" IS FOR A 23" BAY

Specifications subject to change. Please contact CSF Customer Service for more information.
© copyright 2004 Central Steel Fabricators, Inc.
http://www.centralsteelfab.com ◆ 2100 Parkes Drive, Broadview, IL 60155
Phone: 708-652-2037 Fax: 708-652-7010

RNPB07XXK – BLANK POWER STRIP SERIES

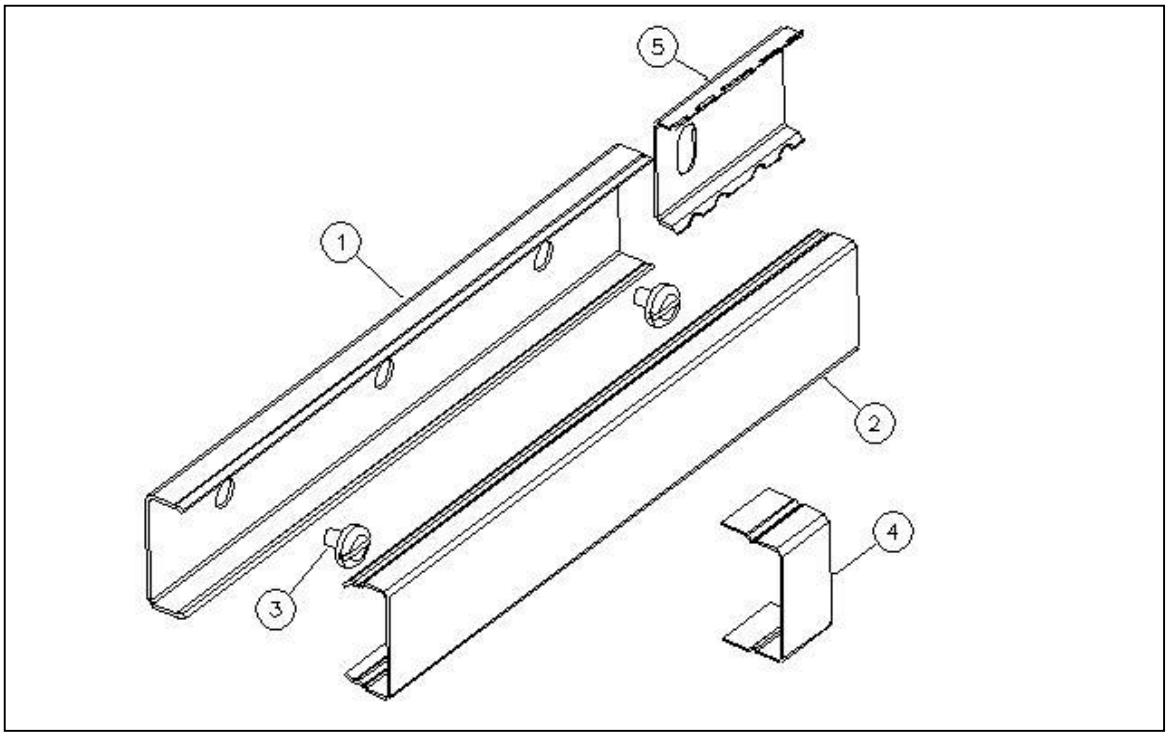

ITEM#	CSF#	QTY	DESCRIPTION
1	RNPB07-BASE	1	WIREMOLD 7.50” BASE
2	RNPB07-COVER	1	WIREMOLD 7.50” COVER
3	PH0400FST	2	12-24UNC X 14” PH PHIL CUTTING
4	WMV2006	1	WIREMOLD COVER CLIP
5	WM2001	1	WIREMOLD COUPLING

NOTES:
- KIT INCLUDES ALL MOUNTING HARDWARE
- THE 22" IS FOR A 19" BAY AND A 26" IS FOR A 23" BAY

Specifications subject to change. Please contact CSF Customer Service for more information.
© copyright 2004 Central Steel Fabricators, Inc.
http://www.centralsteelfab.com ◆ 2100 Parkes Drive, Broadview, IL 60155
Phone: 708-652-2037 Fax: 708-652-7010

RNPB10XXK – BLANK POWER STRIP SERIES

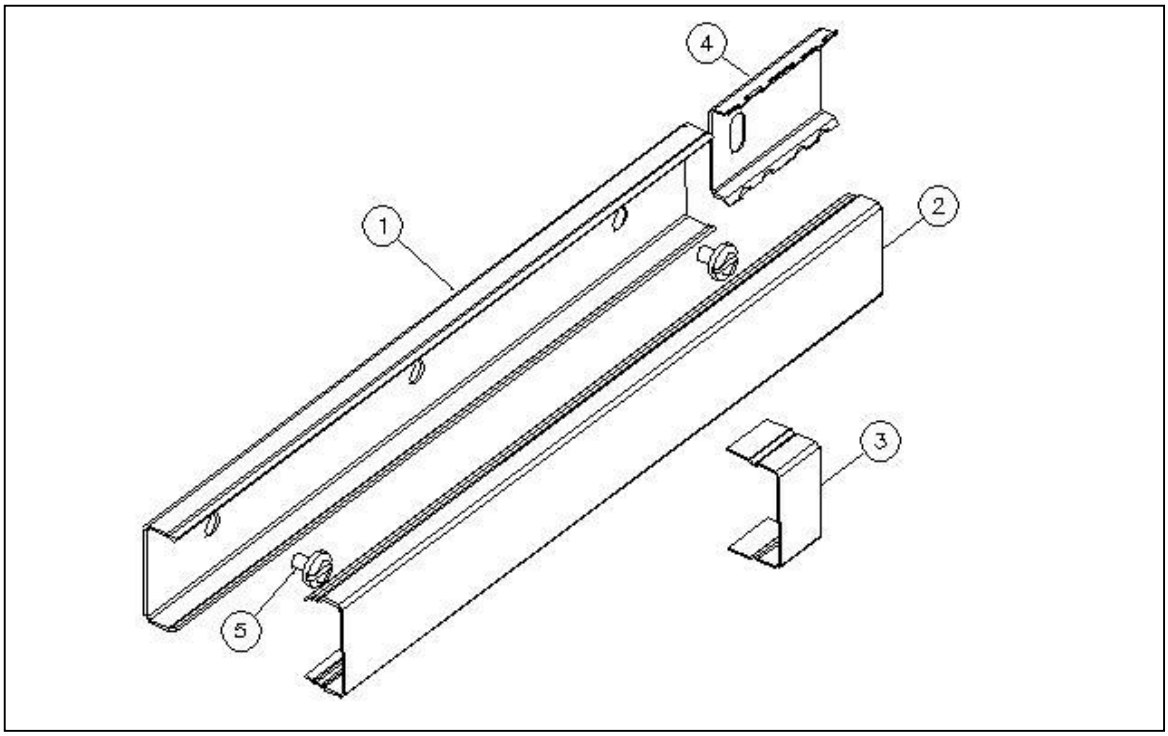

ITEM#	CSF#	QTY	DESCRIPTION
1	RNPB10-BASE	1	WIREMOLD 10.00” BASE
2	RNPB10-COVER	1	WIREMOLD 10.00” COVER
3	WMV2006	1	WIREMOLD COVER CLIP
4	WM2001	1	WIREMOLD COUPLING
5	PH0400FST	2	12-24UNC X 14” PH PHIL CUTTING

NOTES:
- KIT INCLUDES ALL MOUNTING HARDWARE
- THE 22" IS FOR A 19" BAY AND A 26" IS FOR A 23" BAY

Specifications subject to change. Please contact CSF Customer Service for more information.
© copyright 2004 Central Steel Fabricators, Inc.
http://www.centralsteelfab.com ◆ 2100 Parkes Drive, Broadview, IL 60155
Phone: 708-652-2037 Fax: 708-652-7010

RNPB19XXK – BLANK POWER STRIP SERIES

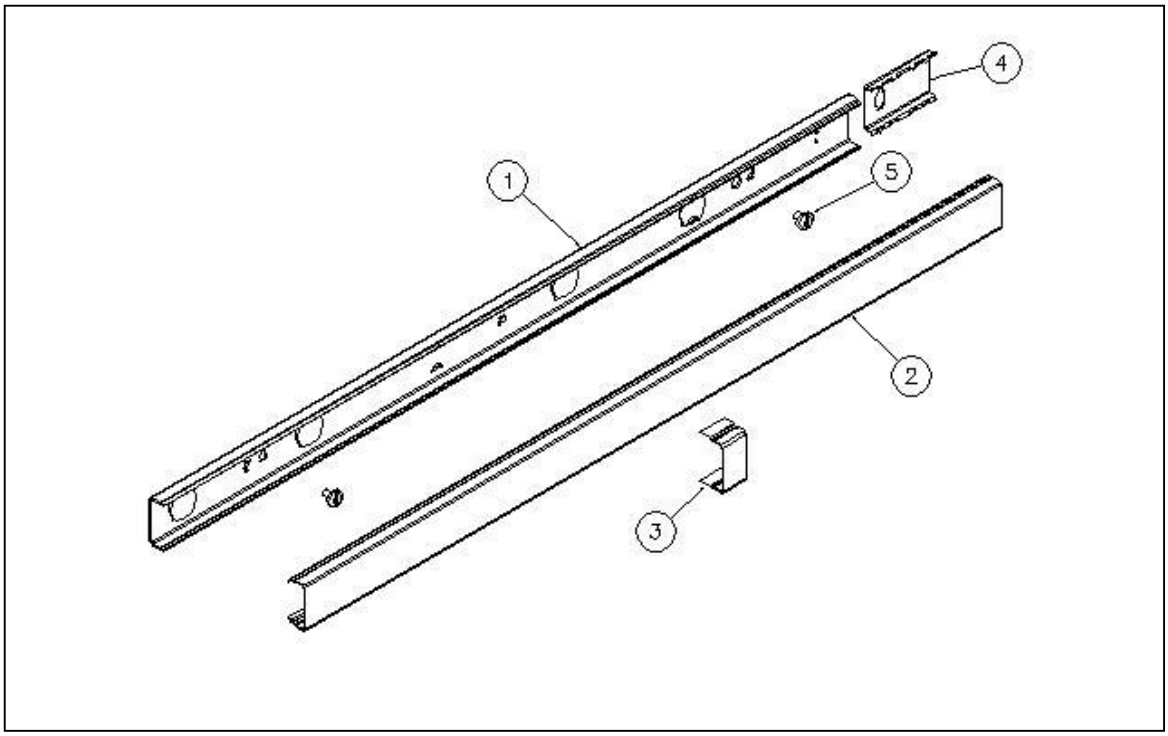

ITEM#	CSF#	QTY	DESCRIPTION
1	RNPB19-BASE	1	WIREMOLD 19” BASE
2	RNPB19-COVER	1	WIREMOLD 19” COVER
3	WMV2006	1	WIREMOLD COVER CLIP
4	WM2001	1	WIREMOLD COUPLING
5	PH0400FST	2	12-24UNC X 14” PH PHIL CUTTING

NOTES:
- KIT INCLUDES ALL MOUNTING HARDWARE
- THE 22" IS FOR A 19" BAY AND A 26" IS FOR A 23" BAY

Specifications subject to change. Please contact CSF Customer Service for more information.
© copyright 2004 Central Steel Fabricators, Inc.
http://www.centralsteelfab.com ◆ 2100 Parkes Drive, Broadview, IL 60155
Phone: 708-652-2037 Fax: 708-652-7010

RNPB23XXK – BLANK POWER STRIP SERIES

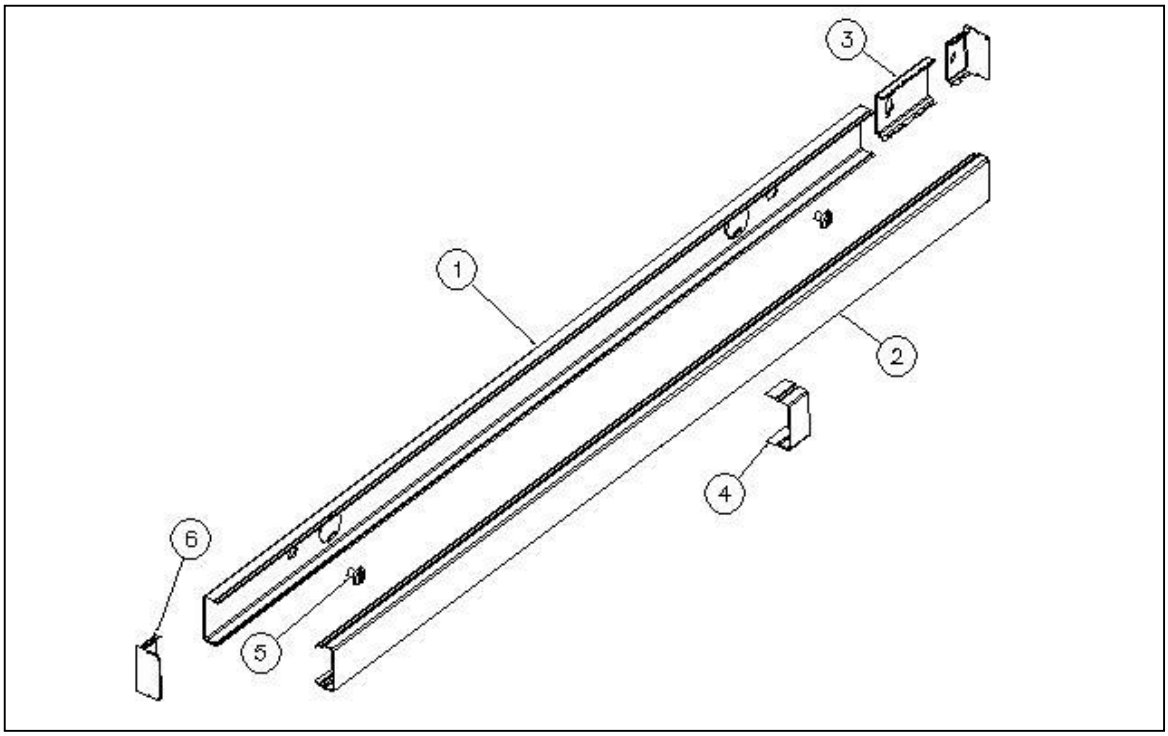

ITEM#	CSF#	QTY	DESCRIPTION
1	RNPB23-BASE	1	WIREMOLD 23” BASE
2	RNPB23-COVER	1	WIREMOLD 23” COVER
3	WM2001	1	WIREMOLD COUPLING
4	WMV2006	1	WIREMOLD COVER CLIP
5	PH0400FST	2	12-24UNC X 14” PH PHIL CUTTING
6	WMV2010	2	WIREMOLD BLANK END FITTING

NOTES:
- KIT INCLUDES ALL MOUNTING HARDWARE
- THE 22" IS FOR A 19" BAY AND A 26" IS FOR A 23" BAY

Specifications subject to change. Please contact CSF Customer Service for more information.
© copyright 2004 Central Steel Fabricators, Inc.
http://www.centralsteelfab.com ◆ 2100 Parkes Drive, Broadview, IL 60155
Phone: 708-652-2037 Fax: 708-652-7010

BLANK PANEL (EIA) MOUNTING HOLE PATTERN

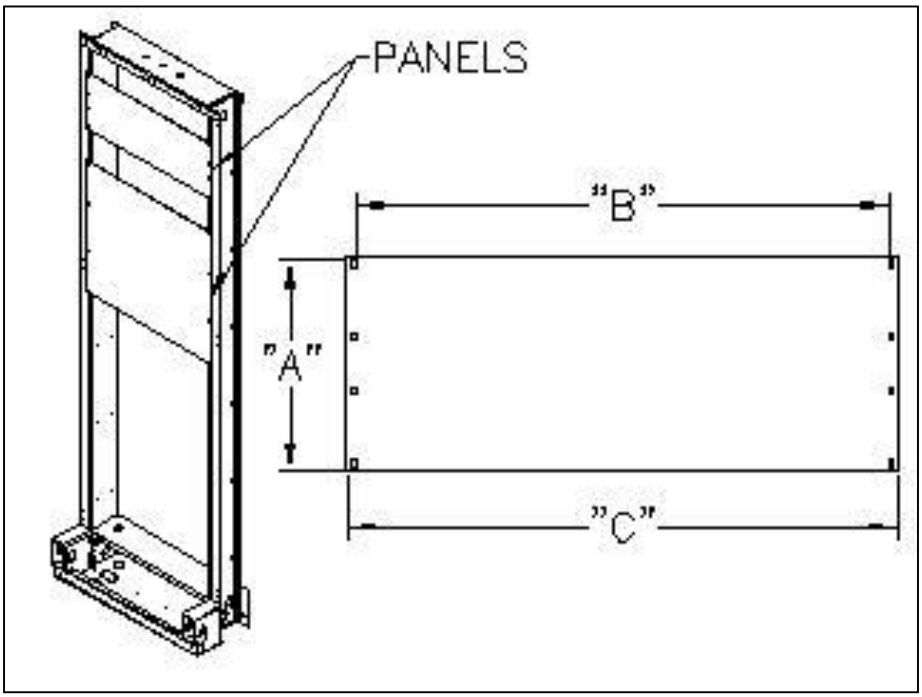

BLANK PANELS 19" EIA				
CSF#	MOUNTING SPACES	"A" DEPTH	"B" MOUNTING	"C" WIDTH
BPE119XX	1	1.75"	18.31"	19.00"
BPE219XX	2	3.50"	18.31"	19.00"
BPE319XX	3	5.25"	18.31"	19.00"
BPE419XX	4	7.00"	18.31"	19.00"

BLANK PANELS 23" EIA				
CSF#	MOUNTING SPACES	"A" DEPTH	"B" MOUNTING	"C" WIDTH
BPE123XX	1	1.75"	22.31"	23.00"
BPE223XX	2	3.50"	22.31"	23.00"
BPE323XX	3	5.25"	22.31"	23.00"
BPE423XX	4	7.00"	22.31"	23.00"

NOTES:
- KIT INCLUDES ALL MOUNTING HARDWARE & BLANK PANEL
- FINISHES: SEE TECH DATA FOR PAINT CODES
- OTHER SIZES AND FINISHES AVAILABLE UPON REQUEST

RVSD*0812

Specifications subject to change. Please contact CSF Customer Service for more information.

© copyright 2004 Central Steel Fabricators, Inc.
http://www.centralsteelfab.com ◆ 2100 Parkes Drive, Broadview, IL 60155
Phone: 708-652-2037 Fax: 708-652-7010

BLANK PANEL 1.75" (EIA) MOUNTING HOLE PATTERN

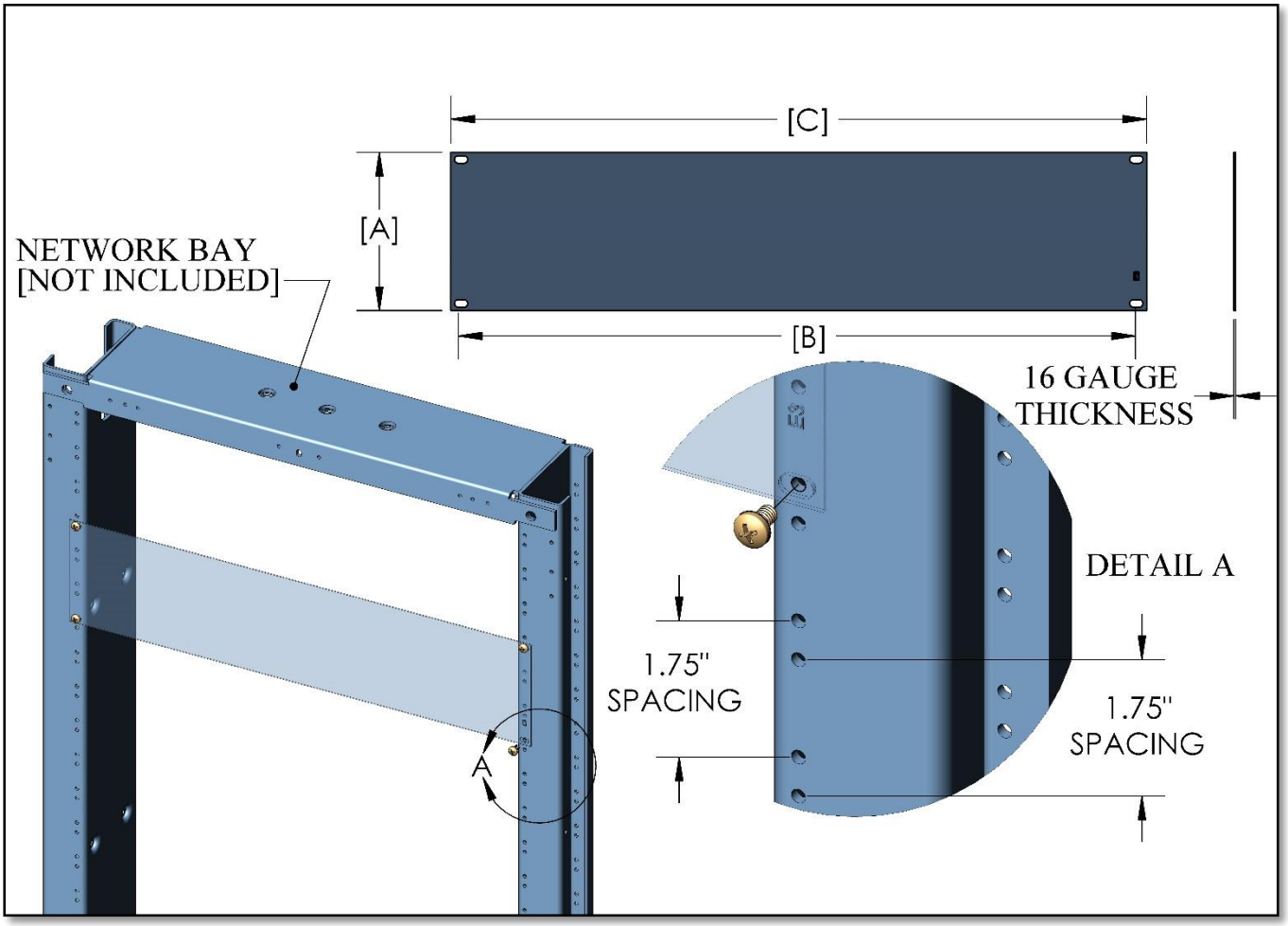

BLANK PANELS 19.00" EIA				
CSF#	MOUNTING SPACES	[A] DEPTH	[B] MOUNTING	[C] WIDTH
BPE119XX	1	1.75"	18.31"	19.00"
BPE219XX	2	3.50"	18.31"	19.00"
BPE319XX	3	5.25"	18.31"	19.00"
BPE419XX	4	7.00"	18.31"	19.00"

BLANK PANELS 23.00" EIA				
CSF#	MOUNTING SPACES	[A] DEPTH	[B] MOUNTING	[C] WIDTH
BPE123XX	1	1.75"	22.31"	23.00"
BPE223XX	2	3.50"	22.31"	23.00"
BPE323XX	3	5.25"	22.31"	23.00"
BPE423XX	4	7.00"	22.31"	23.00"

- KIT INCLUDEDS ALL MOUNTING HARDWARE & BLANK PANEL
- FINISHES: SEE TECH DATA FOR PAINT FINISHES
- OTHER SIZES AND FINISHES AVALIABLE UOPN REQUST

Specifications subject to change. Please contact CSF Customer Service for more information.

© copyright 2004 Central Steel Fabricators, Inc.
http://www.centralsteelfab.com ◆ 2100 Parkes Drive, Broadview, IL 60155
Phone: 708-652-2037 Fax: 708-652-7010

BLANK PANEL 2.00 (WECO) MOUNTING HOLE PATTERN

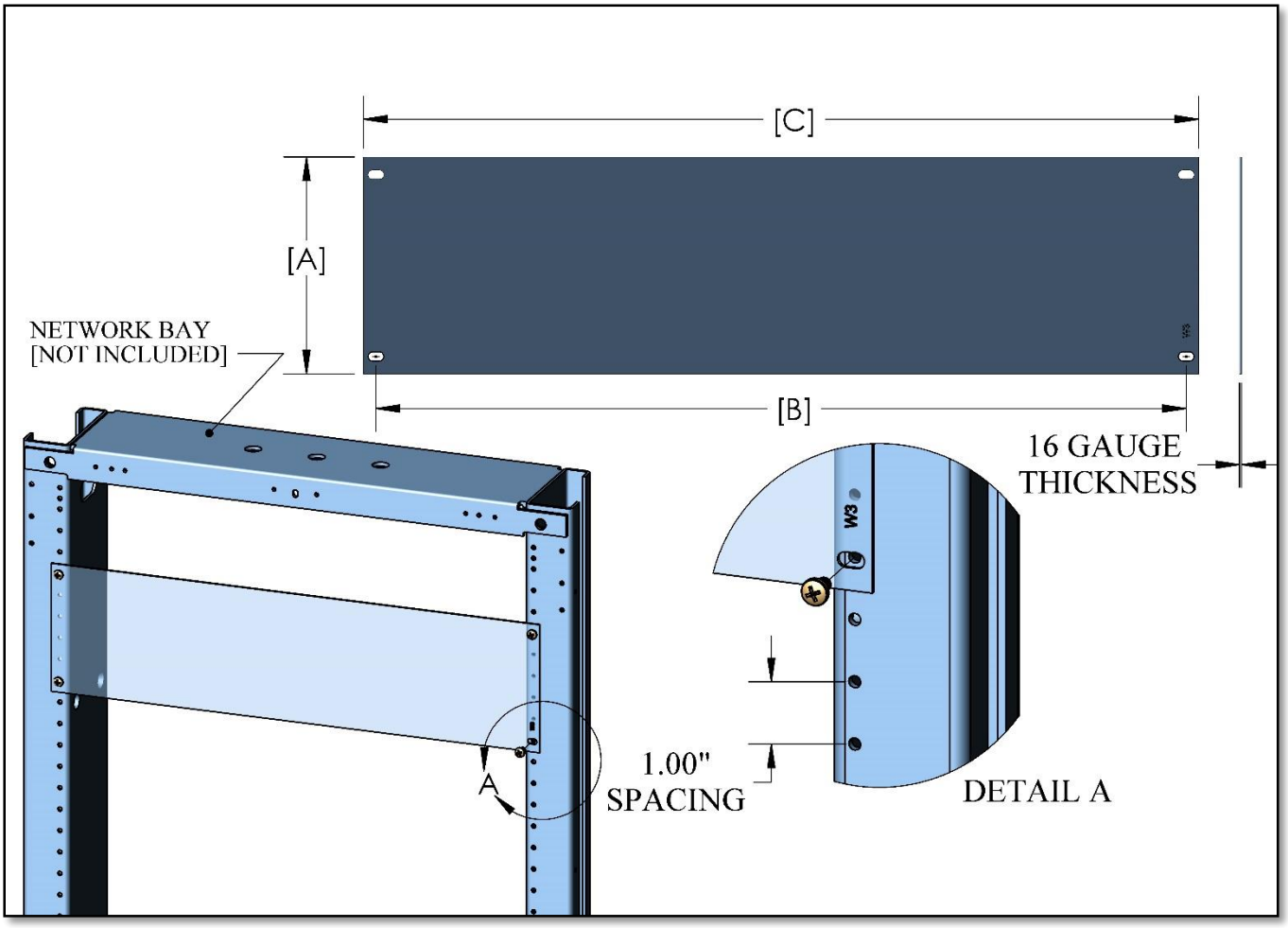

BLANK PANELS 19.00" WECO				
CSF#	MOUNTING SPACES	[A] DEPTH	[B] MOUNTING	[C] WIDTH
BPW119XX	1	2.00"	18.31"	19.00"
BPW219XX	2	4.00"	18.31"	19.00"
BPW319XX	3	6.00"	18.31"	19.00"
BPW419XX	4	8.00"	18.31"	19.00"

BLANK PANELS 23.00" WECO				
CSF#	MOUNTING SPACES	[A] DEPTH	[B] MOUNTING	[C] WIDTH
BPW123XX	1	2.00"	22.31"	23.00"
BPW223XX	2	4.00"	22.31"	23.00"
BPW323XX	3	6.00"	22.31"	23.00"
BPW423XX	4	8.00"	22.31"	23.00"

- KIT INCLUDEDS ALL MOUNTING HARDWARE & BLANK PANEL
- FINISHES: SEE TECH DATA FOR PAINT FINISHES
- OTHER SIZES AND FINISHES AVALIABLE UOPN REQUST

Specifications subject to change. Please contact CSF Customer Service for more information.

© copyright 2004 Central Steel Fabricators, Inc.
http://www.centralsteelfab.com ◆ 2100 Parkes Drive, Broadview, IL 60155
Phone: 708-652-2037 Fax: 708-652-7010

UNIVERSAL BLANK PANEL- MOUNTING HOLE PATTERN FOR 1" OR 1.75"

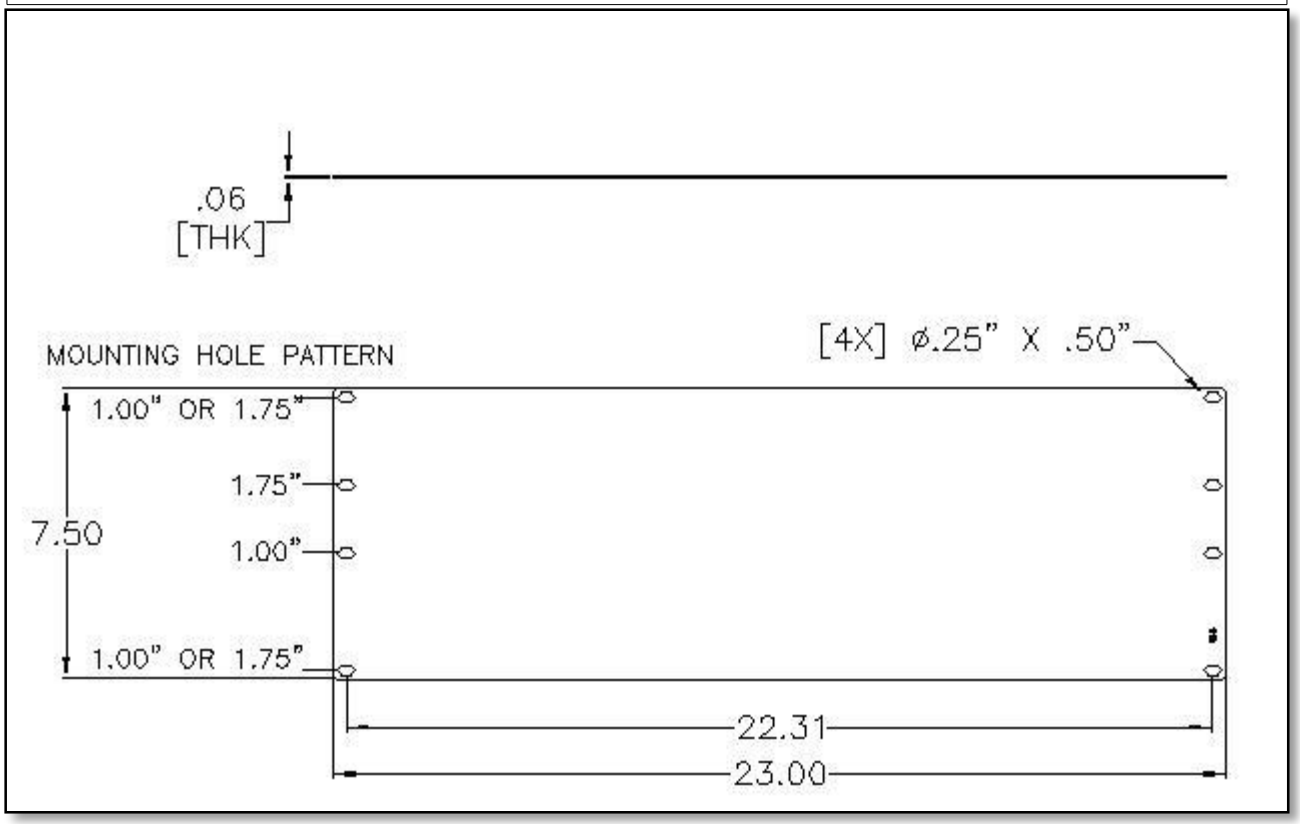

ITEM#	CSF#	DESCRIPTION
1	BPU423XX	UNIVERSAL BLANK PANEL-MOUNTING HOLE PATTERN FOR 1" OR 1.75"

NOTES:
- KIT INCLUDES ALL MOUNTING HARDWARE & BLANK PANEL
- FINISHES: SEE TECH DATA FOR PAINT CODES
- OTHER SIZES AND FINISHES AVAILABLE UPON REQUEST

RVSD*0714

Specifications subject to change. Please contact CSF Customer Service for more information.

© copyright 2004 Central Steel Fabricators, Inc.
http://www.centralsteelfab.com ◆ 2100 Parkes Drive, Broadview, IL 60155
Phone: 708-652-2037 Fax: 708-652-7010

BPU1023XX – UNIVERSAL PANEL 23.00” X 17.50” X [.06 THK]

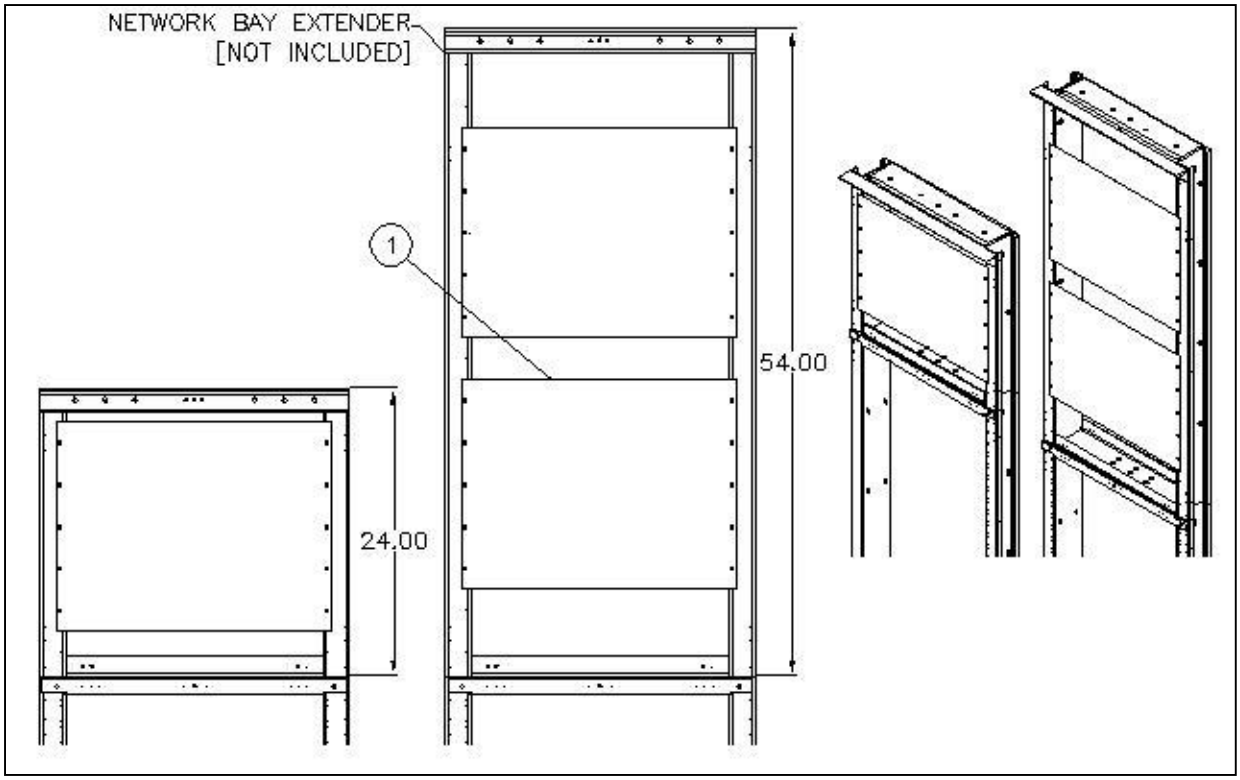

ITEM#	CSF#	DESCRIPTION
1	BPU1023XX	UNIVERSAL PANEL 23.00” X 17.50” X [.06 THK]

NOTES:
- KIT INCLUDES ALL MOUNTING HARDWARE & BLANK PANEL
- FINISHES: SEE TECH DATA FOR PAINT CODES
- OTHER SIZES AND FINISHES AVAILABLE UPON REQUEST

Specifications subject to change. Please contact CSF Customer Service for more information.
© copyright 2004 Central Steel Fabricators, Inc.
http://www.centralsteelfab.com ◆ 2100 Parkes Drive, Broadview, IL 60155
Phone: 708-652-2037 Fax: 708-652-7010

RA200 Series RACK ADAPTERS

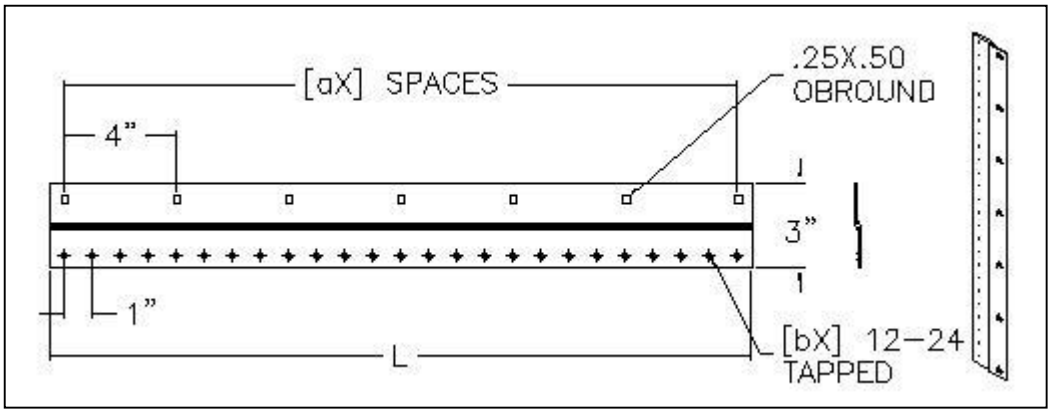

CSF#	[a]	[b]	L
RA207XX	1	7	7"
RA225XX	6	25	25"
RA230XX	7	30	30"
RA275XX	18	75	75"

NOTES:

- KIT INCLUDES ALL MOUNTING HARDWARE AND TWO BRACKETS

Specifications subject to change. Please contact CSF Customer Service for more information.
© copyright 2004 Central Steel Fabricators, Inc.
http://www.centralsteelfab.com ◆ 2100 Parkes Drive, Broadview, IL 60155
Phone: 708-652-2037 Fax: 708-652-7010

RA300 Series RACK ADAPTERS

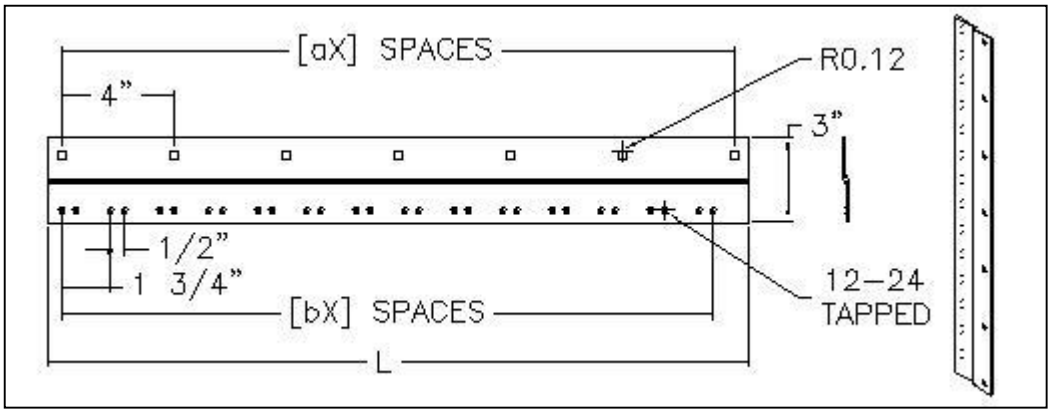

CSF#	[a]	[b]	L
RA307XX	1	7	7"
RA325XX	6	25	25"
RA330XX	7	30	30"
RA375XX	18	75	75"

NOTES:
- KIT INCLUDES ALL MOUNTING HARDWARE AND TWO BRACKETS

Specifications subject to change. Please contact CSF Customer Service for more information.
© copyright 2004 Central Steel Fabricators, Inc.
http://www.centralsteelfab.com ◆ 2100 Parkes Drive, Broadview, IL 60155
Phone: 708-652-2037 Fax: 708-652-7010

RA400 Series RACK ADAPTERS

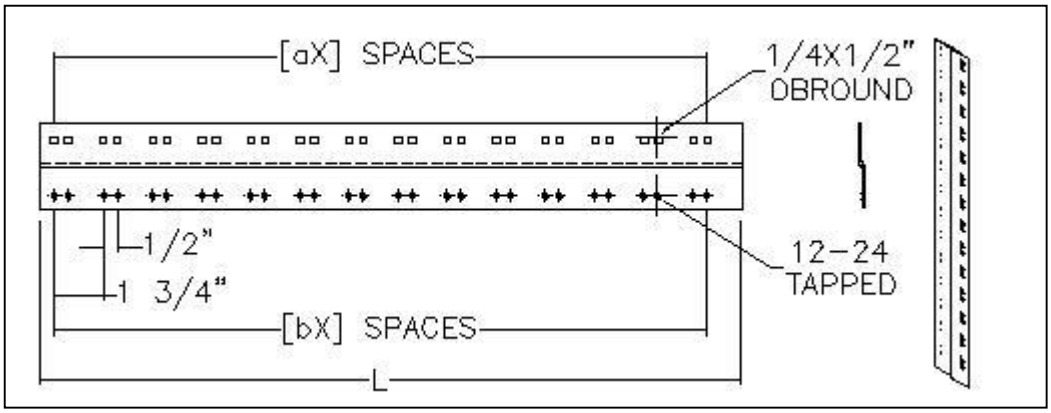

CSF#	[a]	[b]	L
RA407XX	1	7	7"
RA425XX	6	25	25"
RA430XX	7	30	30"
RA475XX	18	75	75"

NOTES:
- KIT INCLUDES ALL MOUNTING HARDWARE AND TWO BRACKETS

Specifications subject to change. Please contact CSF Customer Service for more information.
© copyright 2004 Central Steel Fabricators, Inc.
http://www.centralsteelfab.com ◆ 2100 Parkes Drive, Broadview, IL 60155
Phone: 708-652-2037 Fax: 708-652-7010

RA700 Series UNIVERSAL TO EIA RACK ADAPTERS

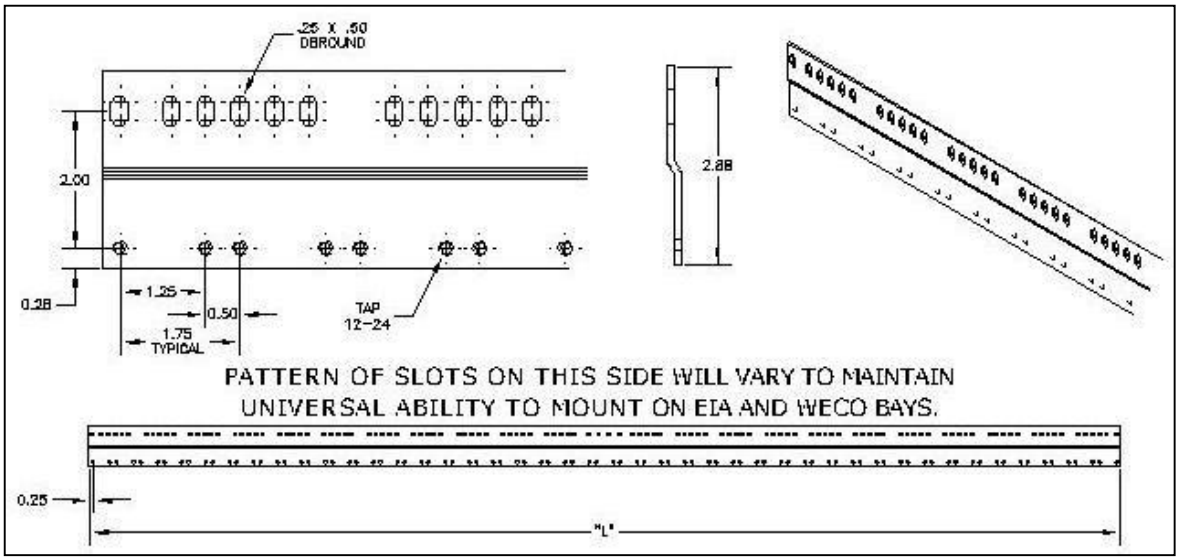

CSF#	MTG SPACES	"L"
RA701XXK	1	1.75"
RA702XXK	2	3.50"
RA703XXK	3	5.25"
RA704XXK	4	7.00"
RA705XXK	5	8.75"
RA706XXK	6	10.50"
RA707XXK	7	12.25"
RA708XXK	8	14.00"
RA709XXK	9	15.75"
RA710XXK	10	17.50"
RA711XXK	11	19.25"
RA712XXK	12	21.00"
RA714XXK	14	24.50

NOTES:

- RACK ADAPTERS ARE DESIGNED TO BE MOUNTED ON EIA (1.75") OR WECO (2.00") RACKS
- ***RA701 IS NOT UNIVERSAL***
- KIT INCLUDES ALL MOUNTING HARDWARE AND TWO BRACKETS

RVSD*11/2016

Specifications subject to change. Please contact CSF Customer Service for more information.

© copyright 2004 Central Steel Fabricators, Inc.
http://www.centralsteelfab.com ◆ 2100 Parkes Drive, Broadview, IL 60155
Phone: 708-652-2037 Fax: 708-652-7010

RA800 Series UNIVERSAL TO WECO RACK ADAPTERS

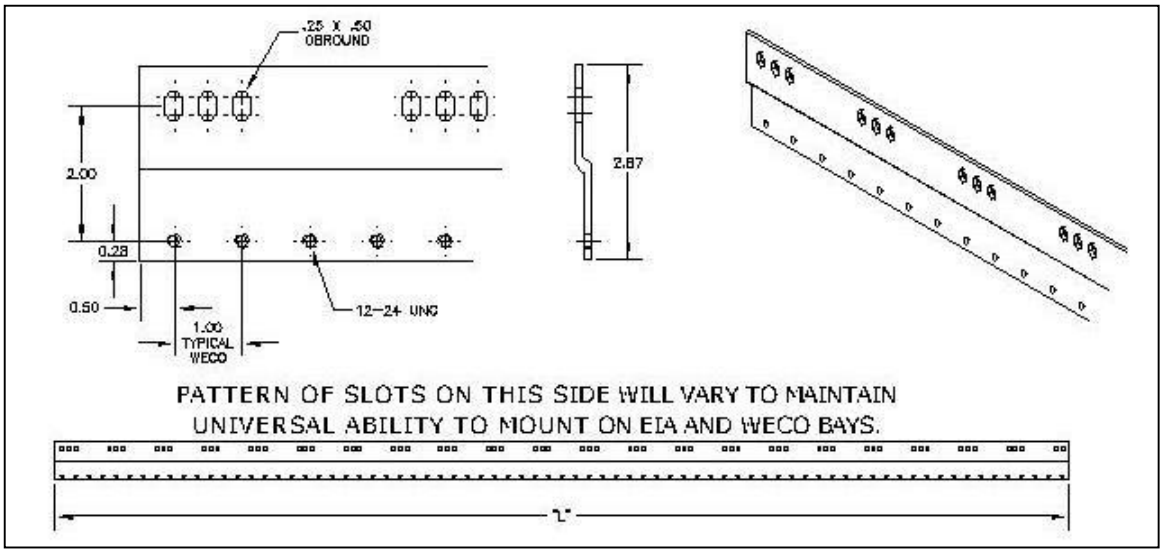

CSF#	MTG SPACES	"L"
RA801XXK	1	2.00"
RA802XXK	2	4.00"
RA803XXK	3	6.00"
RA804XXK	4	8.00"
RA805XXK	5	10.00"
RA806XXK	6	12.00"
RA807XXK	7	14.00"
RA808XXK	8	16.00"
RA809XXK	9	18.00"
RA810XXK	10	20.00"
RA811XXK	11	22.00"
RA812XXK	12	24.00"
RA837XXK	37	75.00"

NOTES:

- RACK ADAPTERS ARE DESIGNED TO BE MOUNTED ON EIA (1.75") OR WECO (2.00") RACKS
- ***RA801 IS NOT UNIVERSAL***
- KIT INCLUDES ALL MOUNTING HARDWARE AND TWO BRACKETS

RVSD*11/2016

Specifications subject to change. Please contact CSF Customer Service for more information.

© copyright 2004 Central Steel Fabricators, Inc.
http://www.centralsteelfab.com ◆ 2100 Parkes Drive, Broadview, IL 60155
Phone: 708-652-2037 Fax: 708-652-7010

UNEQUAL FLANGE RACK COVER [R4XXXX]

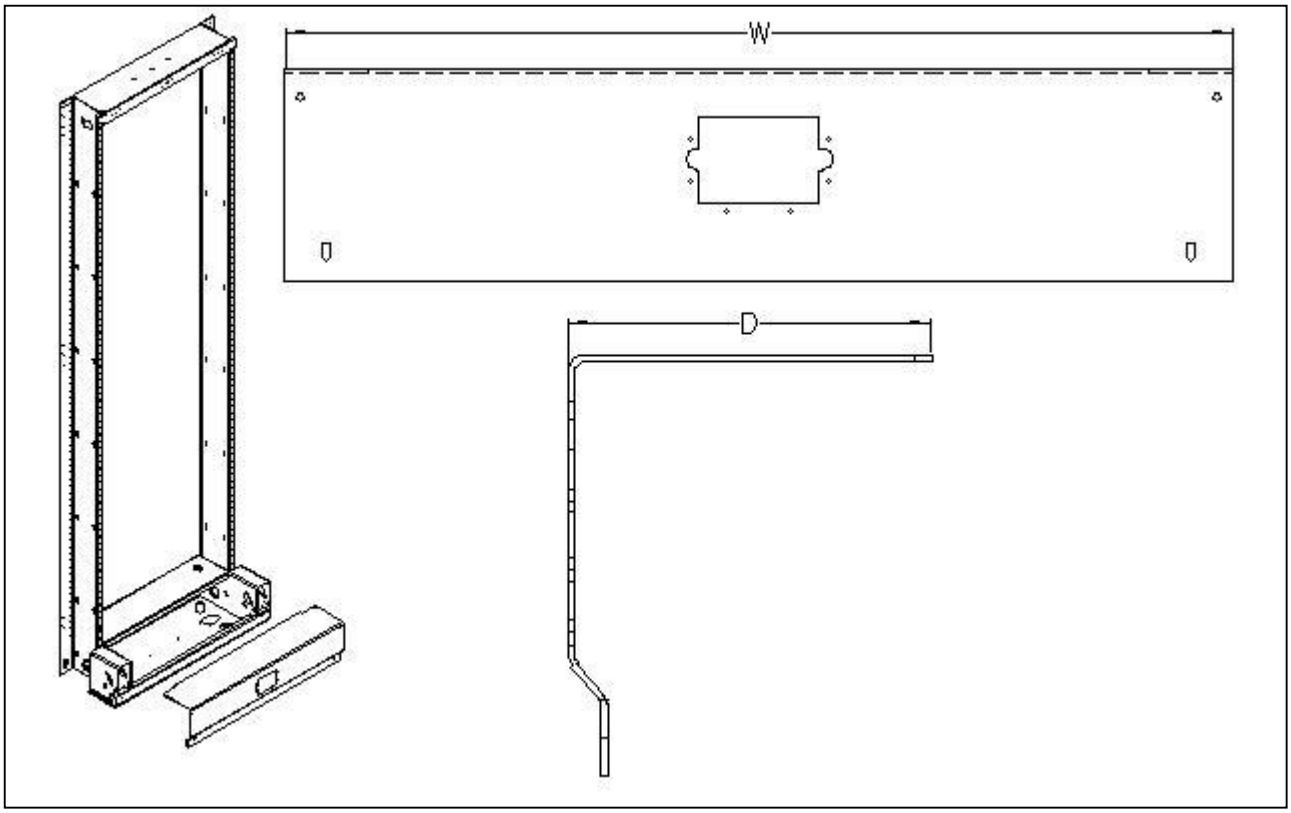

UNEQUAL FLANGE RACK COVER [R4XXXX]			
CSF#	WIGHT	DEPTH	DESCRIPTION
R401XX	26.00"	5.00"	UNEQUAL FLANGE RACK COVER
R404XX	26.00"	6.00"	UNEQUAL FLANGE RACK COVER
R405XX	22.00"	5.00"	UNEQUAL FLANGE RACK COVER

NOTES:
- KIT INCLUDES ALL MOUNTING HARDWARE

Specifications subject to change. Please contact CSF Customer Service for more information.
© copyright 2004 Central Steel Fabricators, Inc.
http://www.centralsteelfab.com ◆ 2100 Parkes Drive, Broadview, IL 60155
Phone: 708-652-2037 Fax: 708-652-7010

RUB Series GUARD BOX EXTENDER

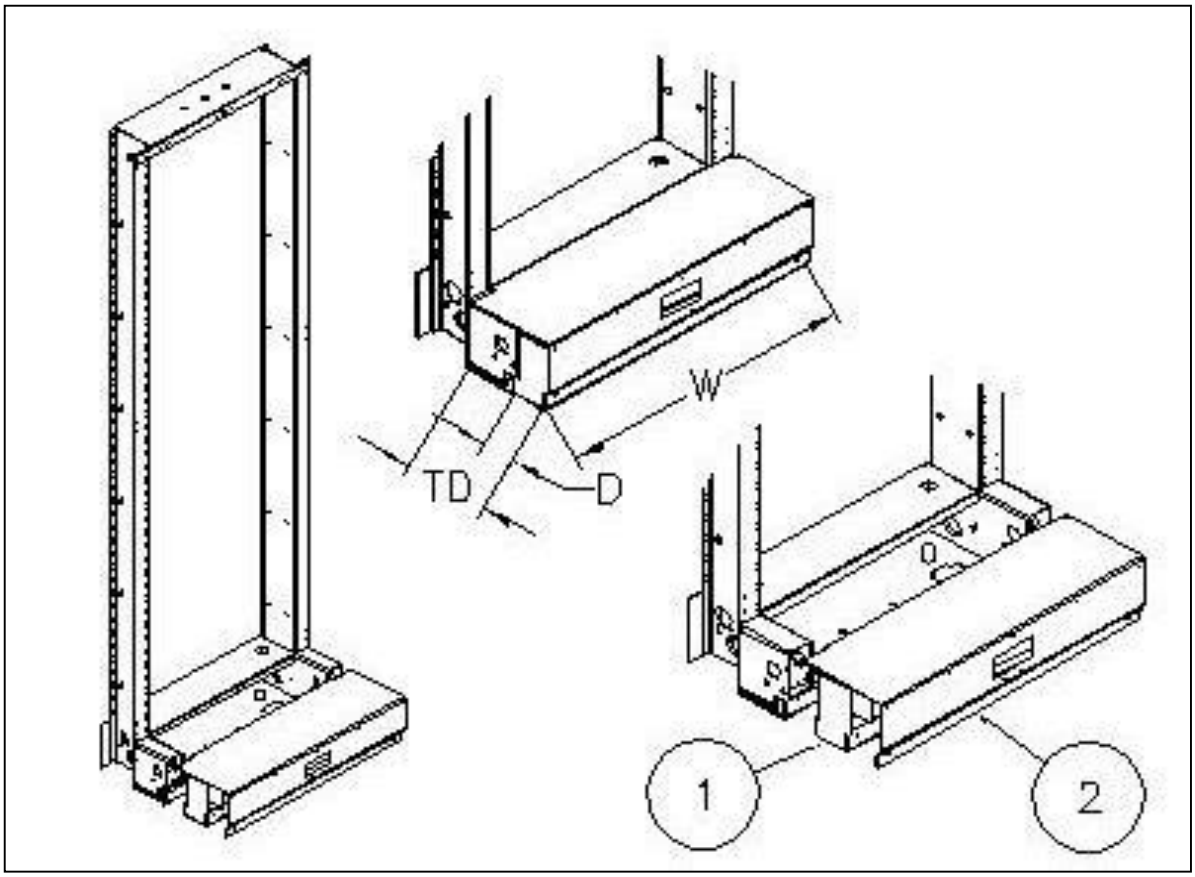

CSF#	W	D	TD	PART 1	PART 2
RUB223XX	25.88	2.00	7.00	BEU223XX	R417XX
RUB323XX	25.88	3.00	8.00	BEU323XX	R408XX
RUB523XX	25.88	5.00	10.00	*BEU523XX	R410XX

NOTES:

- KIT INCLUDES ALL MOUNTING HARDWARE, GUARD BOX EXTENDER, AND COVER
- COVER IS DEEP ENOUGH TO ACCOMMODATE EXTENDER AND EXISTING 5" FIXED GUARD BOX
- OTHER SIZES AND FINISHES AVAILABLE UPON REQUEST
- *BEU523 IS MADE UP OF A BEU223 AND A BEU323

Specifications subject to change. Please contact CSF Customer Service for more information.
© copyright 2004 Central Steel Fabricators, Inc.
http://www.centralsteelfab.com ◆ 2100 Parkes Drive, Broadview, IL 60155
Phone: 708-652-2037 Fax: 708-652-7010

RF3101 – Rack Fastening Hardware

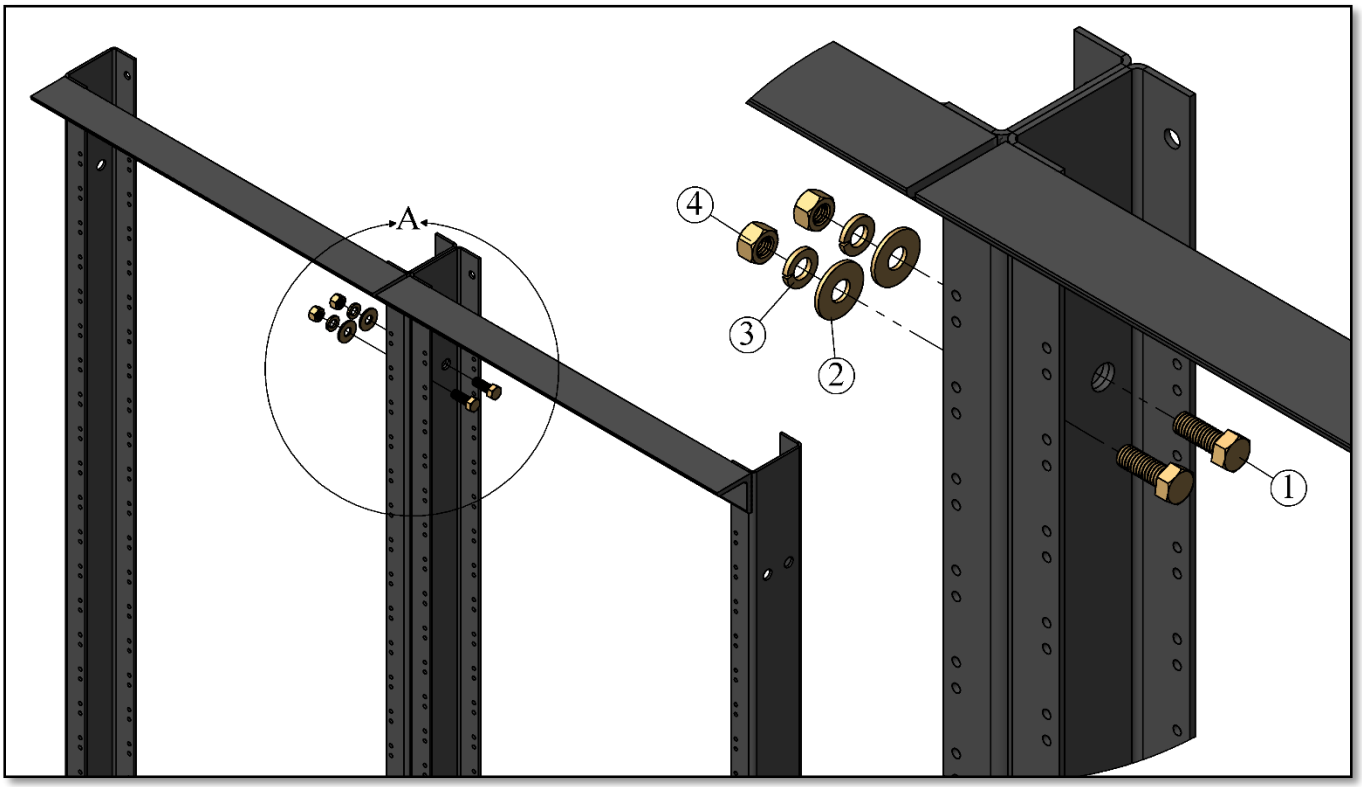

RF3101 – Rack Fastening Hardware			
Item	QTY	Part #	Description
1	6	HH1005	3/8-16 HHCS X 1.00” LG. – ZY
2	6	FW166	3/8” Flat Washer, 1.00” O.D. – ZY
3	6	LW156	3/8” Spring Lockwasher - ZY
4	6	HN146	3/8-16 Hex Nut - ZY

RVSD*0417

Specifications subject to change. Please contact CSF Customer Service for more information.

© copyright 2004 Central Steel Fabricators, Inc.
http://www.centralsteelfab.com ◆ 2100 Parkes Drive, Broadview, IL 60155
Phone: 708-652-2037 Fax: 708-652-7010

EXTENSION RACK 1.00" HOLE SPACING

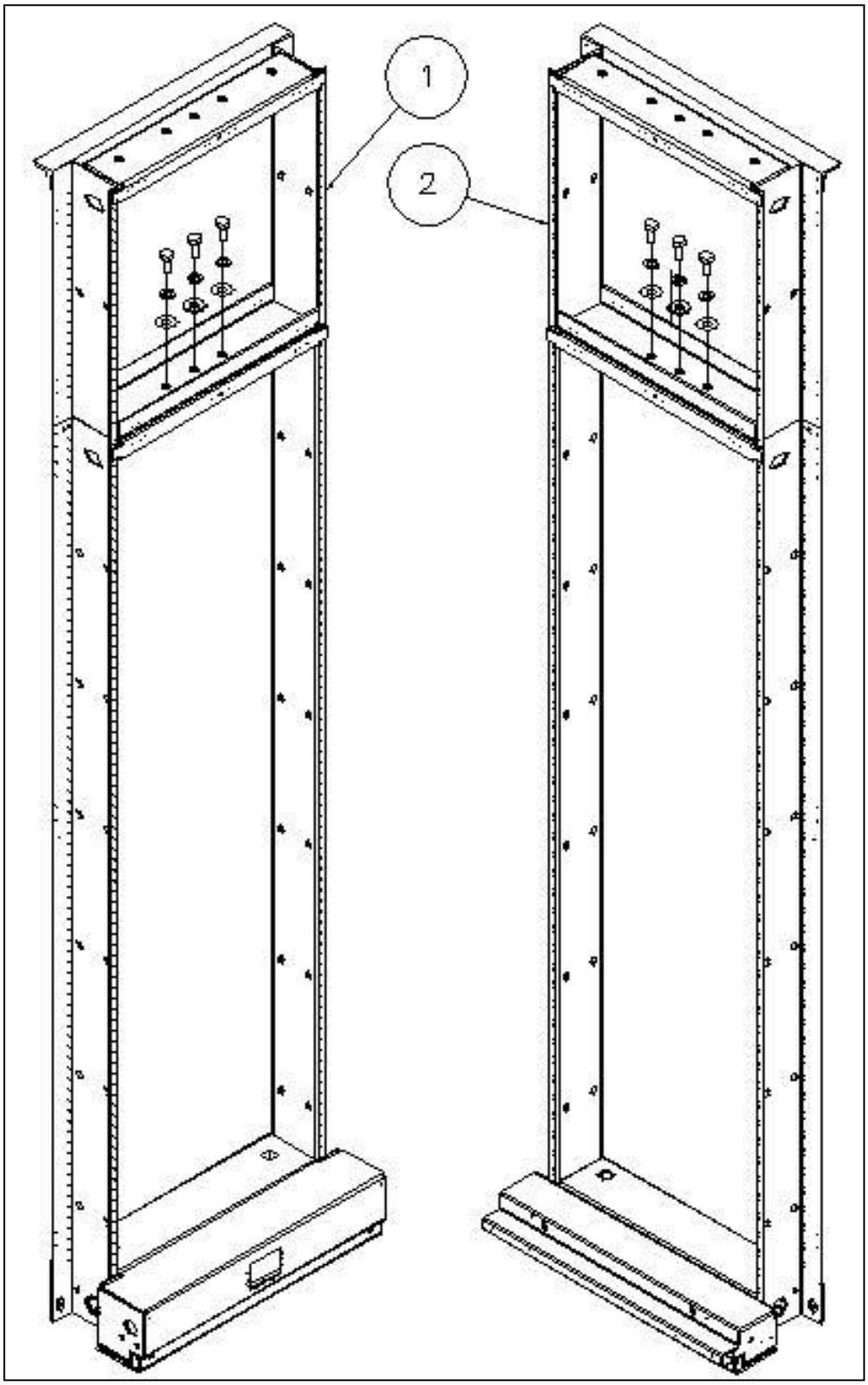

Specifications subject to change. Please contact CSF Customer Service for more information.

© copyright 2004 Central Steel Fabricators, Inc.
http://www.centralsteelfab.com ◆ 2100 Parkes Drive, Broadview, IL 60155
Phone: 708-652-2037 Fax: 708-652-7010

EXTENSION RACK 1.00” HOLE SPACING – 19” WIDE

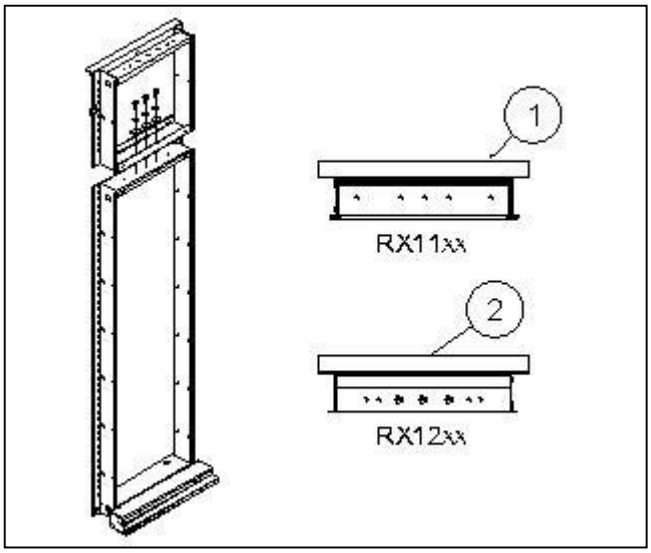

Specifications subject to change. Please contact CSF Customer Service for more information.
© copyright 2004 Central Steel Fabricators, Inc.
http://www.centralsteelfab.com ◆ 2100 Parkes Drive, Broadview, IL 60155 ◆
Phone: 708-652-2037 Fax: 708-652-7010

EXTENSION RACK 1.00” HOLE SPACING – 23” WIDE

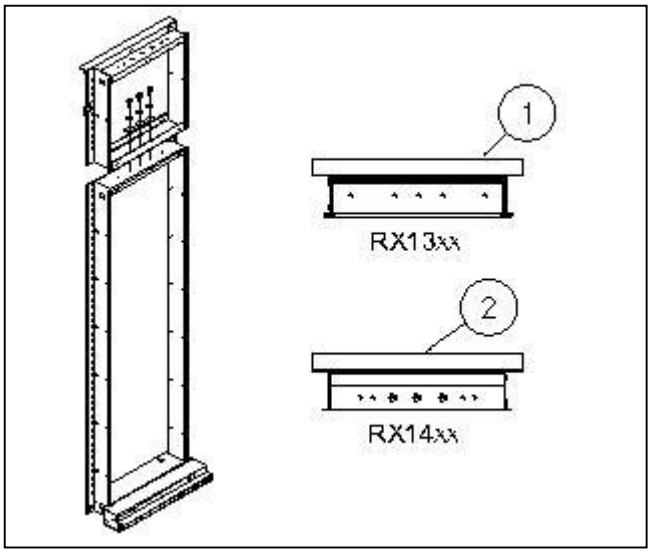

Specifications subject to change. Please contact CSF Customer Service for more information.
© copyright 2004 Central Steel Fabricators, Inc.
http://www.centralsteelfab.com ◆ 2100 Parkes Drive, Broadview, IL 60155
Phone: 708-652-2037 Fax: 708-652-7010

EXTENSION RACK 1.75” HOLE SPACING – 19” WIDE

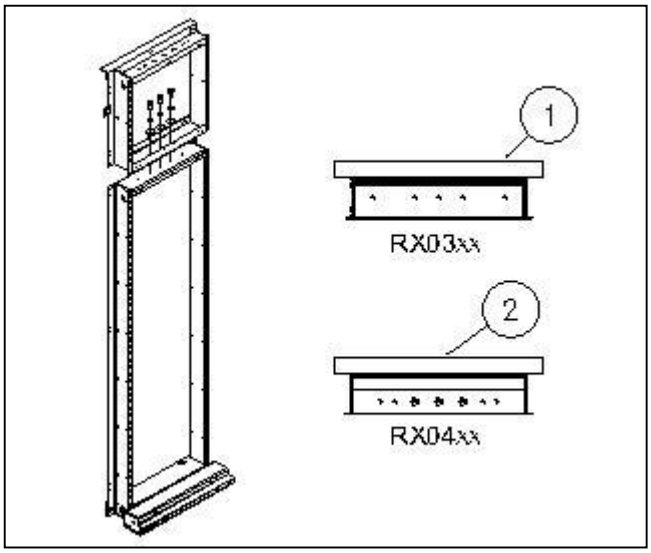

Specifications subject to change. Please contact CSF Customer Service for more information.
© copyright 2004 Central Steel Fabricators, Inc.
http://www.centralsteelfab.com ◆ 2100 Parkes Drive, Broadview, IL 60155
Phone: 708-652-2037 Fax: 708-652-7010

EXTENSION RACK 1.75" HOLE SPACING – 23" WIDE

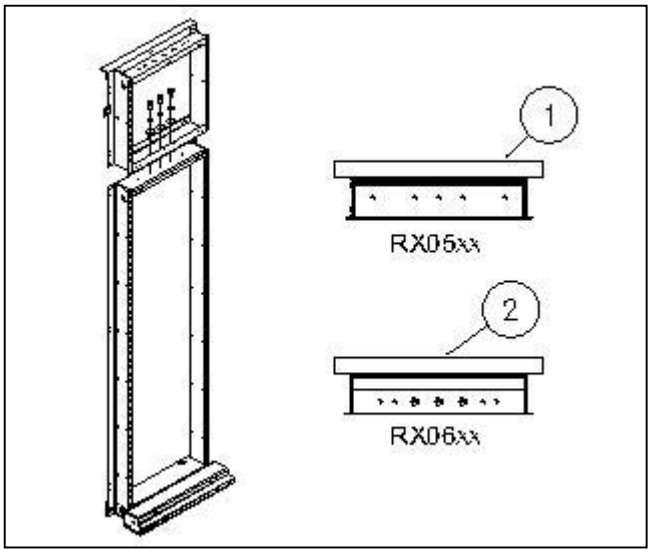

Specifications subject to change. Please contact CSF Customer Service for more information.

© copyright 2004 Central Steel Fabricators, Inc.
http://www.centralsteelfab.com ◆ 2100 Parkes Drive, Broadview, IL 60155
Phone: 708-652-2037 Fax: 708-652-7010

RF 3101 RACK FASTENER

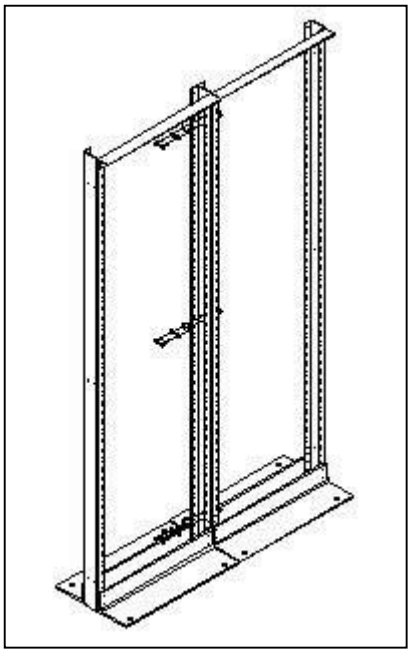

CSF#
RF3101

NOTES:
- KIT INCLUDES ALL HARDWARE FOR FASTENING RACKS

Specifications subject to change. Please contact CSF Customer Service for more information.
© copyright 2004 Central Steel Fabricators, Inc.
http://www.centralsteelfab.com ◆ 2100 Parkes Drive, Broadview, IL 60155 ◆
Phone: 708-652-2037 Fax: 708-652-7010

RGR0500 Series REAR GUARD RAIL

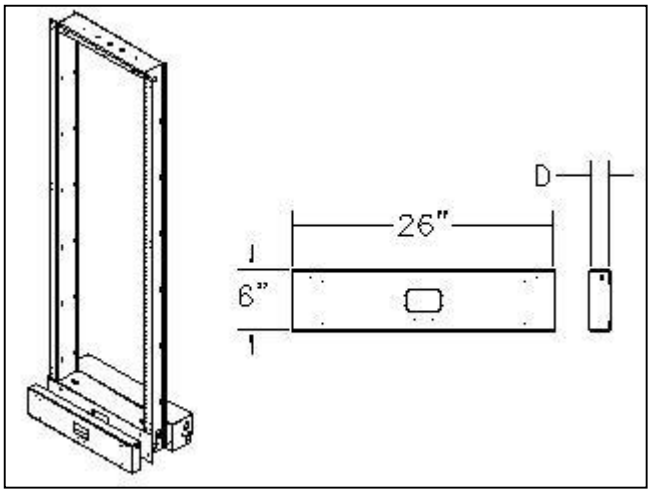

CSF#	D
RGR0501XX	1.00"
RGR0502XX	2.00"
RGR0503XX	3.00"
RGR0504XX	4.00"
RGR0505XX	5.00"
RGR0508XX	8.00"
RGR0510XX	10.00"
RGR0512XX	12.00"
RGR0517XX	17.00”
RGR0520XX	20.00"
RGR0525XX	25.00"

NOTES:
- FINISHES: SEE TECH DATA FOR PAINT CODES
- KIT INCLUDES ALL MOUNTING HARDWARE & COVER PLATES FOR OUTLET CUT OUT.
- UNITS CAN BE JOINED IN SERIES TO CREATE OTHER DEPTHS

RVSD*11/12

Specifications subject to change. Please contact CSF Customer Service for more information.

© copyright 2004 Central Steel Fabricators, Inc.
http://www.centralsteelfab.com ◆ 2100 Parkes Drive, Broadview, IL 60155
Phone: 708-652-2037 Fax: 708-652-7010

GRU Series GUARD RAIL

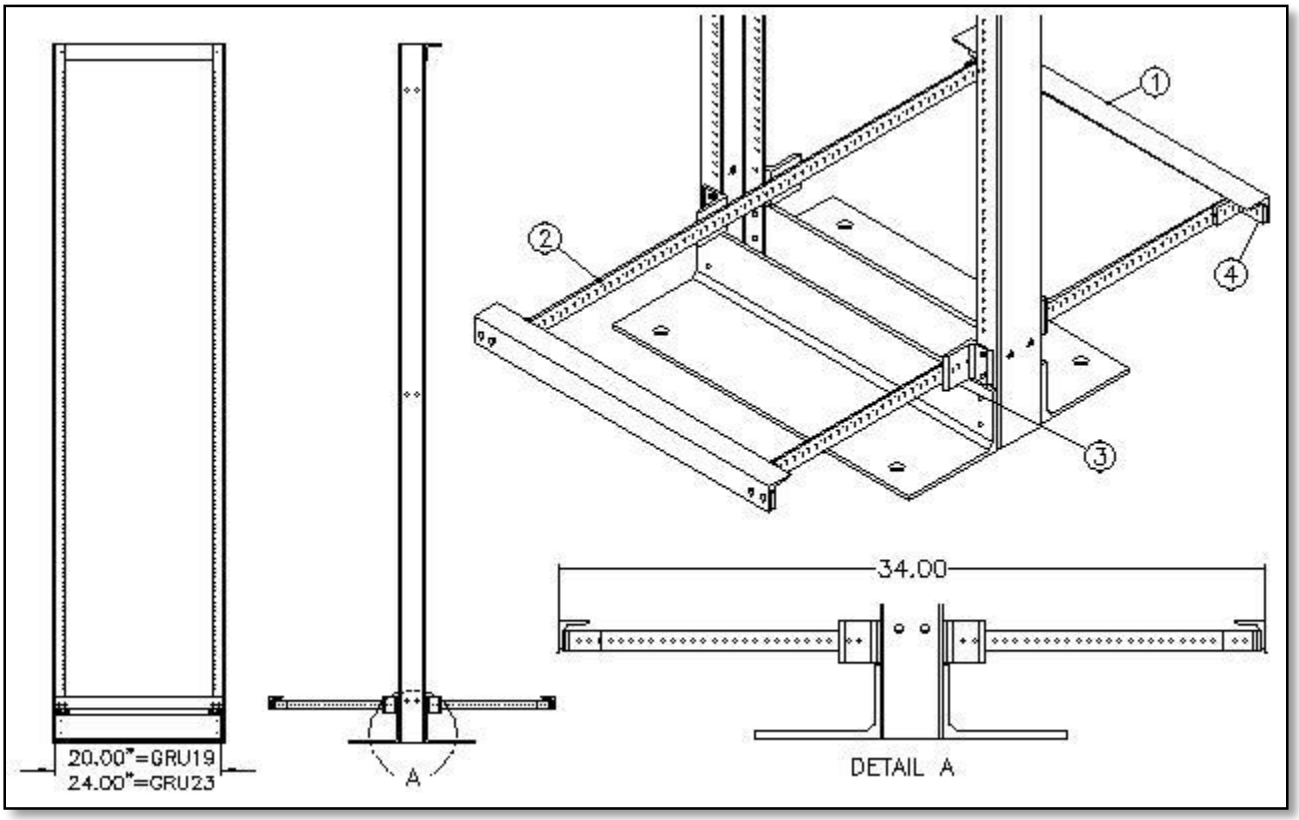

ITEM#	CSF#	QTY	DESCRIPTION
1	GRSAXX	2	GUARD RAIL SUPPORT ANGLE
2	GRAADJ34	2	34.00" ADJUSTABLE RAIL
3	GRABRKT	4	GUARD RAIL ATTACHING BRACKET
4	GRAFRBRKT	4	GUARD RAIL FRONT & REAR BRACKET
5	GRUHDWR	1	GRU HARDWARE KIT [NOT SHOWN]

CSF#	DESCRIPTION
GRU19XX	19.00" UNIVERSAL GUARD RAIL – 34.00" DP.
GRU23XX	23.00" UNIVERSAL GUARD RAIL – 34.00" DP.

NOTES:
- KIT INCLUDES ALL MOUNTING HARDWARE
- FINISHES: SEE TECH DATA FOR PAINT CODES
- GRUXXXX – NON STOCK ITEM, LEAD TIME 18 TO 20 DAYS

RVSD*0715

Specifications subject to change. Please contact CSF Customer Service for more information.

© copyright 2004 Central Steel Fabricators, Inc.
http://www.centralsteelfab.com ◆ 2100 Parkes Drive, Broadview, IL 60155
Phone: 708-652-2037 Fax: 708-652-7010

RN5 Series GUARD BOX WIDE FLANGE [GBWF] 1.75" MTG

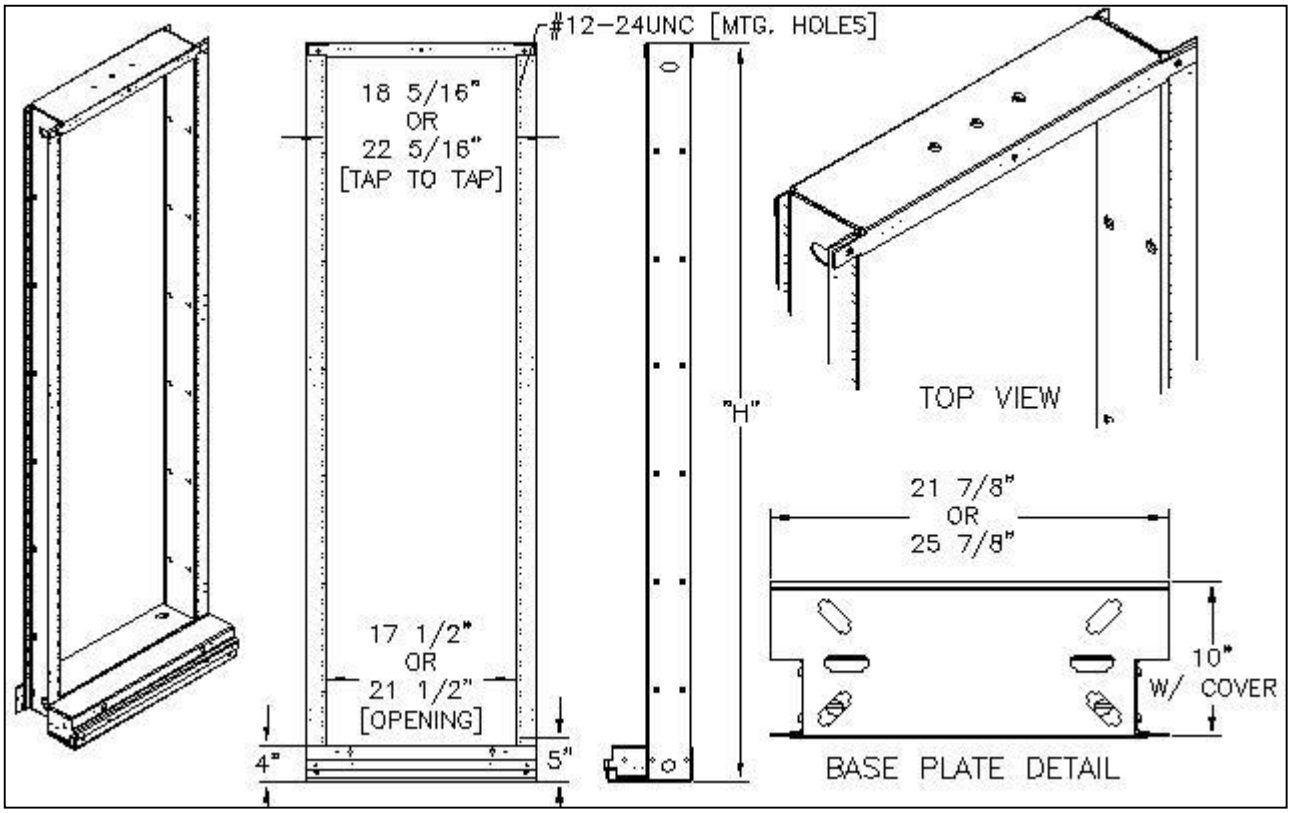

GUARD BOX WIDE FLANGE		
CLOSED DUCT		
1-3/4" HOLE SPACED		
DOUBLE SPACED		
12-24 MOUNTING HOLES		
19"	HEIGHT	23"
RN5025XXK	7'-0"	RN5125XXK

NOTES:
- FINISHES: SEE TECH DATA FOR PAINT CODES
- 9'-0" AND 11'-6" SIZES ARE MADE UP OF A 7'-0" BAY WITH A BAY EXTENDER
- KIT INCLUDES BAY CONNECTING HARDWARE
- ORDER FLOOR ANCHORING AND TOP SUPPORT HARDWARE SEPARATELY

RVSD*0612

Specifications subject to change. Please contact CSF Customer Service for more information.

© copyright 2004 Central Steel Fabricators, Inc.
http://www.centralsteelfab.com ◆ 2100 Parkes Drive, Broadview, IL 60155
Phone: 708-652-2037 Fax: 708-652-7010

RN5 Series GUARD BOX WIDE FLANGE [GBWF] 1.00" MTG

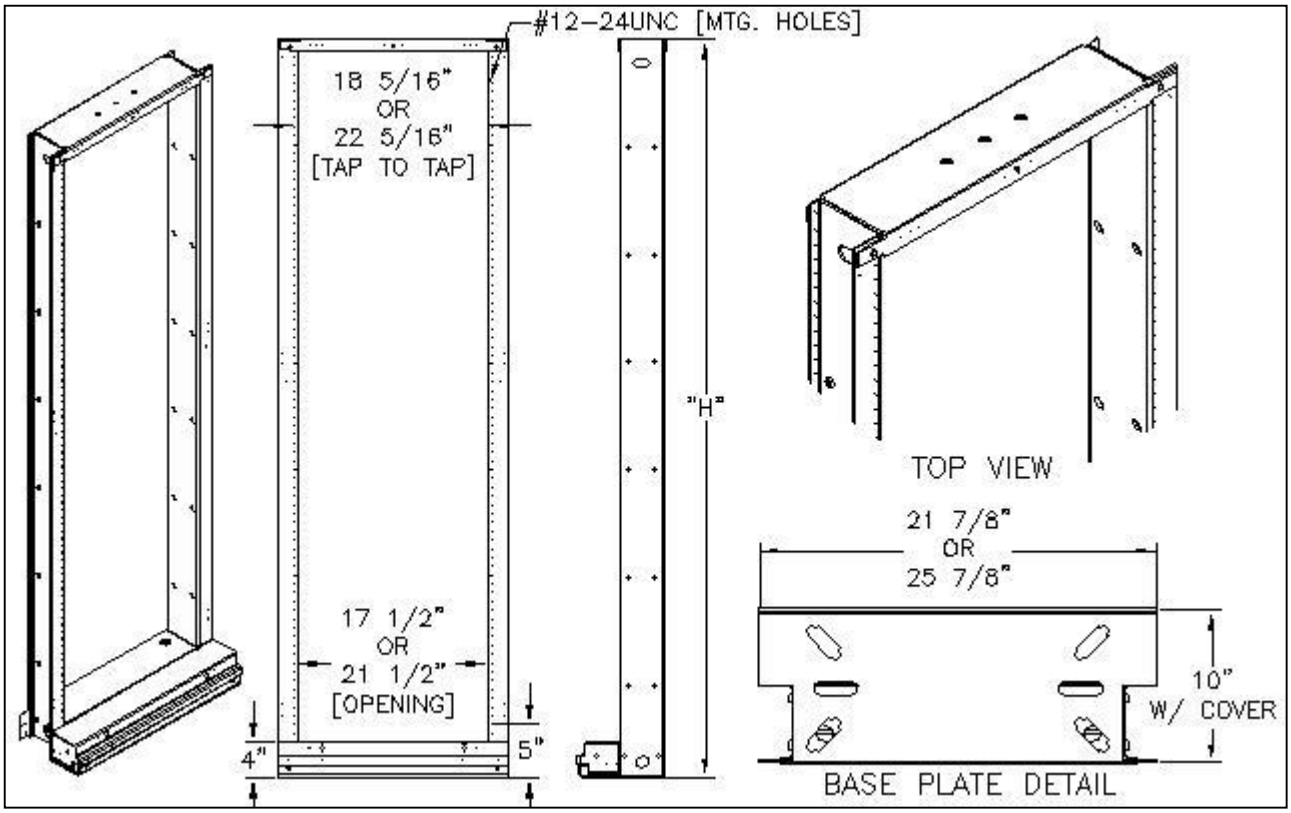

GUARD BOX WIDE FLANGE		
CLOSED DUCT		
1" HOLE SPACED		
DOUBLE SPACED		
12-24 MOUNTING HOLES		
19"	HEIGHT	23"
RN5425XXK	7'-0"	RN5525XXK

NOTES:
- FINISHES: SEE TECH DATA FOR PAINT CODES
- 9'-0" AND 11'-6" SIZES ARE MADE UP OF A 7'-0" BAY WITH A BAY EXTENDER
- KIT INCLUDES BAY CONNECTING HARDWARE
- ORDER FLOOR ANCHORING AND TOP SUPPORT HARDWARE SEPARATELY

RVSD*0612

Specifications subject to change. Please contact CSF Customer Service for more information.

© copyright 2004 Central Steel Fabricators, Inc.
http://www.centralsteelfab.com ◆ 2100 Parkes Drive, Broadview, IL 60155
Phone: 708-652-2037 Fax: 708-652-7010

RN6 Series GUARD BOX NARROW FLANGE [GBNF] 1.75" MTG

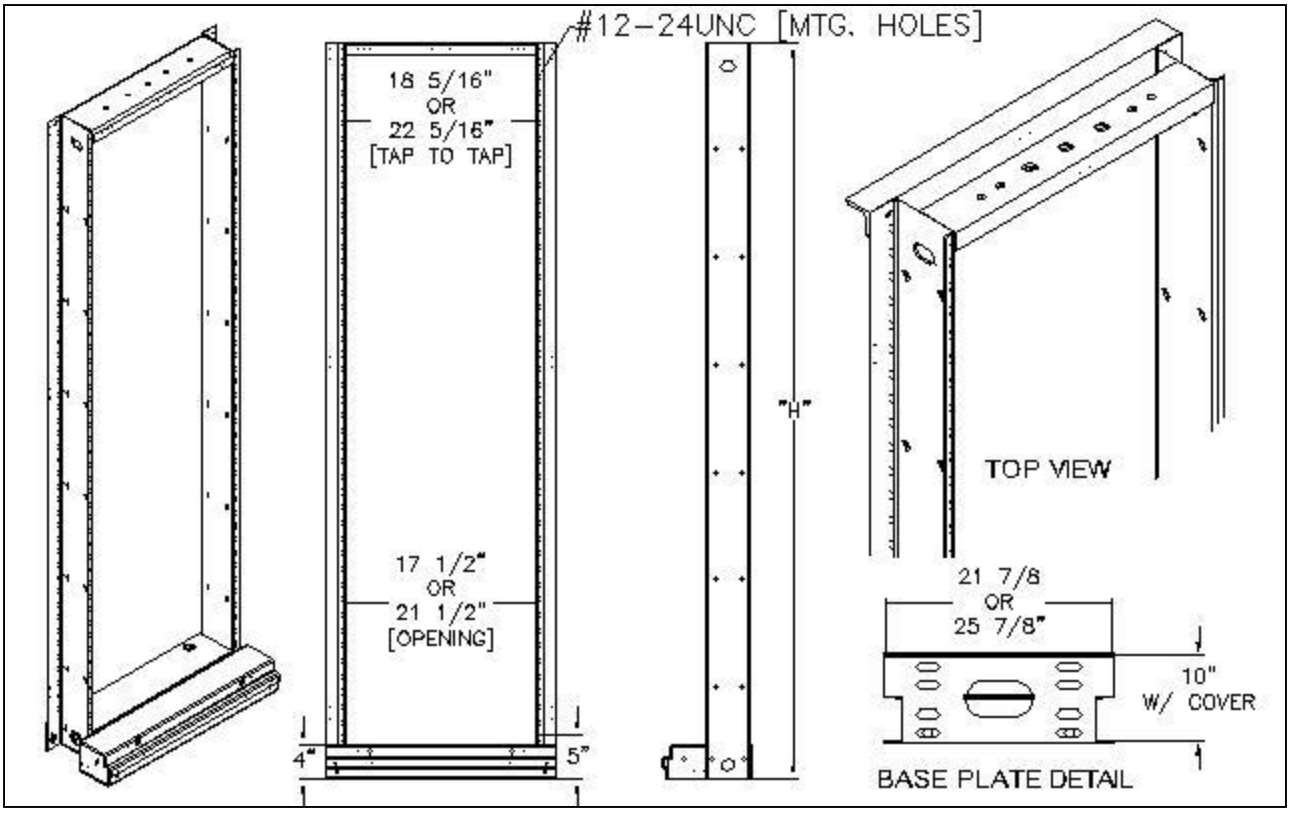

GUARD BOX NARROW FLANGE		
OPEN DUCT		
1-3/4" HOLE SPACED		
DOUBLE SIDED		
12-24 MOUNTING HOLES		
19"	HEIGHT	23"
RN6025XXK	7'-0"	RN6125XXK

NOTES:
- OTHER SIZES AND FINISHES AVAILABLE UPON REQUEST
- INCLUDES RACK BASE COVER
- 9'-0" AND 11'-6" SIZES ARE MADE UP OF A 7'-0" BAY WITH A BAY EXTENDER
- KIT INCLUDES BAY CONNECTING HARDWARE
- ORDER FLOOR ANCHORING AND TOP SUPPORT HARDWARE SEPARATELY

RVSD*0612

Specifications subject to change. Please contact CSF Customer Service for more information.

© copyright 2004 Central Steel Fabricators, Inc.
http://www.centralsteelfab.com ◆ 2100 Parkes Drive, Broadview, IL 60155
Phone: 708-652-2037 Fax: 708-652-7010

RN6 Series GUARD BOX NARROW FLANGE [GBNF] 1.00" MTG

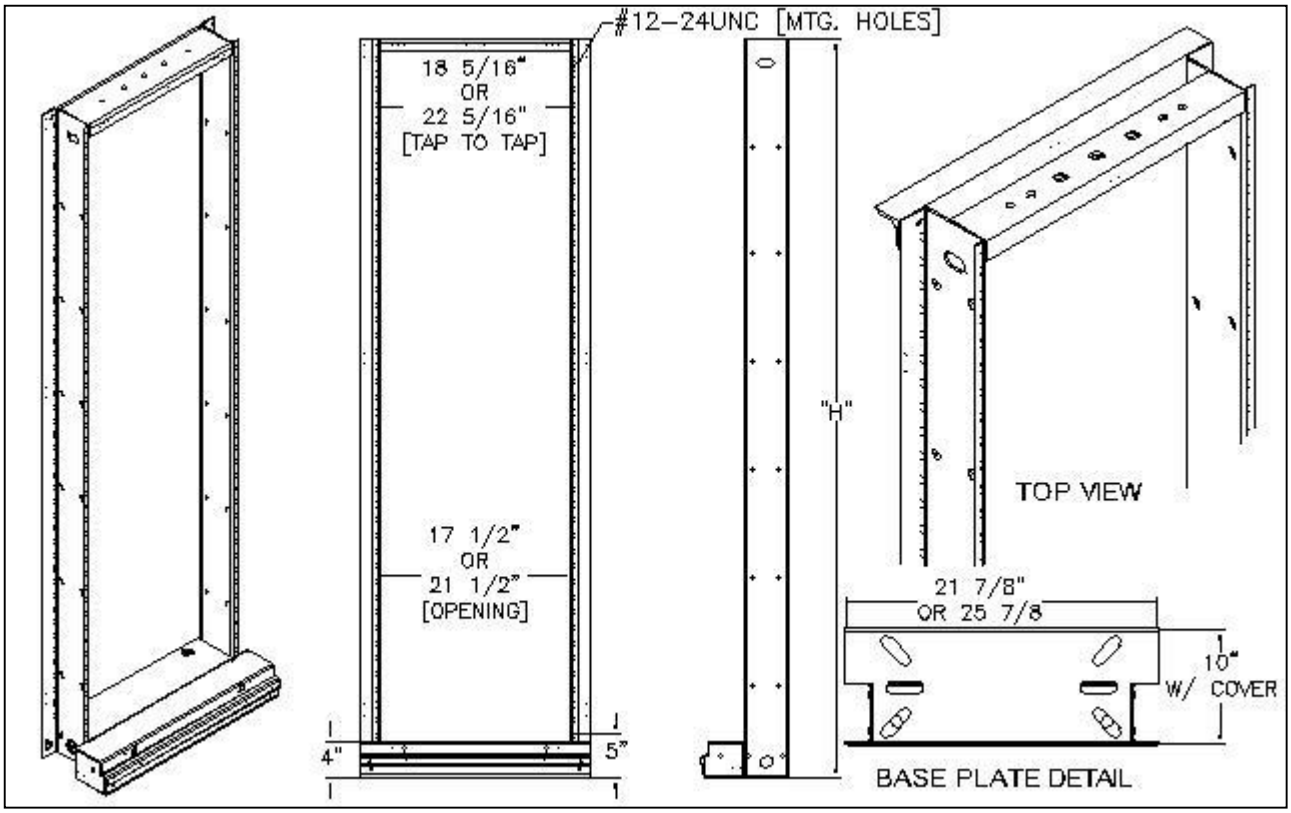

GUARD BOX NARROW FLANGE		
OPEN DUCT		
1" HOLE SPACED		
DOUBLE SPACED		
12-24 MOUNTING HOLES		
19"	HEIGHT	23"
RN6425XXK	7'-0"	RN6525XXK

NOTES:
- FINISHES: SEE TECH DATA FOR PAINT CODES
- 9'-0" AND 11'-6" SIZES ARE MADE UP OF A 7'-0" BAY WITH A BAY EXTENDER
- KIT INCLUDES BAY CONNECTING HARDWARE
- ORDER FLOOR ANCHORING AND TOP SUPPORT HARDWARE SEPARATELY

RVSD*0612

Specifications subject to change. Please contact CSF Customer Service for more information.

© copyright 2004 Central Steel Fabricators, Inc.
http://www.centralsteelfab.com ◆ 2100 Parkes Drive, Broadview, IL 60155
Phone: 708-652-2037 Fax: 708-652-7010

SEISMIC Z4 GUARD BOX WIDE FLANGE [GBWF] 1.75" MTG

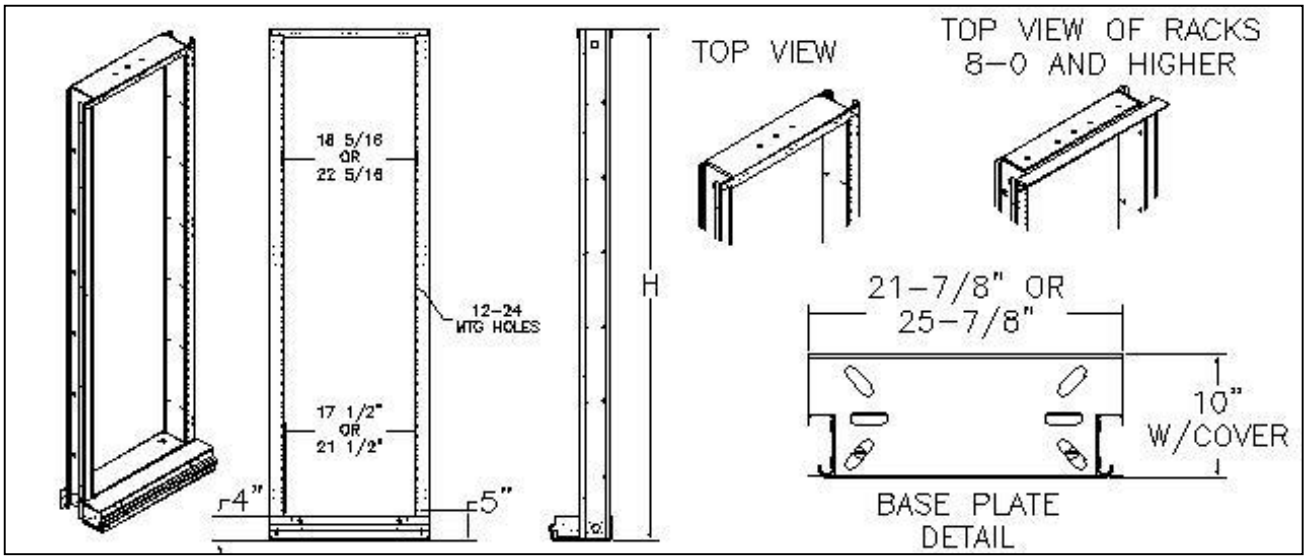

GUARD BOX WIDE FLANGE		
CLOSED DUCT		
1-3/4" HOLE SPACED		
DOUBLE SPACED		
12-24 MOUNTING HOLES		
19"	HEIGHT	23"
RNE5025XXK	7'-0"	RNE5125XXK

NOTES:
- RACK SUCCESSFULLY TESTED FOR USE IN ZONE 4 BY TELCORDIA TO NEBS STANDARDS
- FINISHES: SEE TECH DATA FOR PAINT CODES
- 9'-0" AND 11'-6" SIZES ARE MADE UP OF A 7'-0" BAY WITH A SEISMIC BAY EXTENDER
- KIT INCLUDES BAY CONNECTING HARDWARE
- ORDER FLOOR ANCHORING AND TOP SUPPORT HARDWARE SEPARATELY

RVSD*0612

Specifications subject to change. Please contact CSF Customer Service for more information.

© copyright 2004 Central Steel Fabricators, Inc.
http://www.centralsteelfab.com ◆ 2100 Parkes Drive, Broadview, IL 60155
Phone: 708-652-2037 Fax: 708-652-7010

SEISMIC Z4 GUARD BOX WIDE FLANGE [GBWF] 1.00" MTG

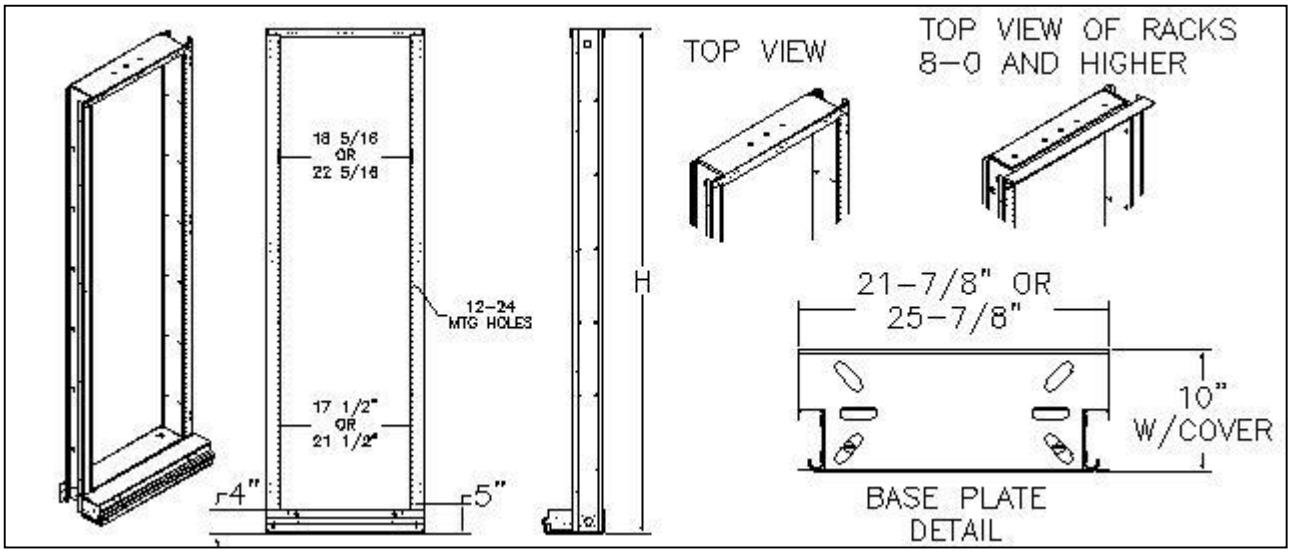

GUARD BOX WIDE FLANGE		
CLOSED DUCT		
1" HOLE SPACED		
DOUBLE SPACED		
12-24 MOUNTING HOLES		
19"	HEIGHT	23"
RNE5425XXK	7'-0"	RNE5525XXK

NOTES:
- RACK SUCCESSFULLY TESTED FOR USE IN ZONE 4 BY TELCORDIA TO NEBS STANDARDS
- 9'-0" AND 11'-6" SIZES ARE MADE UP OF A 7'-0" BAY WITH A SEISMIC BAY EXTENDER
- FINISHES: SEE TECH DATA FOR PAINT CODES
- KIT INCLUDES BAY CONNECTING HARDWARE
- ORDER FLOOR ANCHORING AND TOP SUPPORT HARDWARE SEPARATELY

RVSD*0612

Specifications subject to change. Please contact CSF Customer Service for more information.

© copyright 2004 Central Steel Fabricators, Inc.
http://www.centralsteelfab.com ◆ 2100 Parkes Drive, Broadview, IL 60155
Phone: 708-652-2037 Fax: 708-652-7010

SEISMIC Z4 GUARD BOX NARROW FLANGE [GBNF] 1.75" MTG

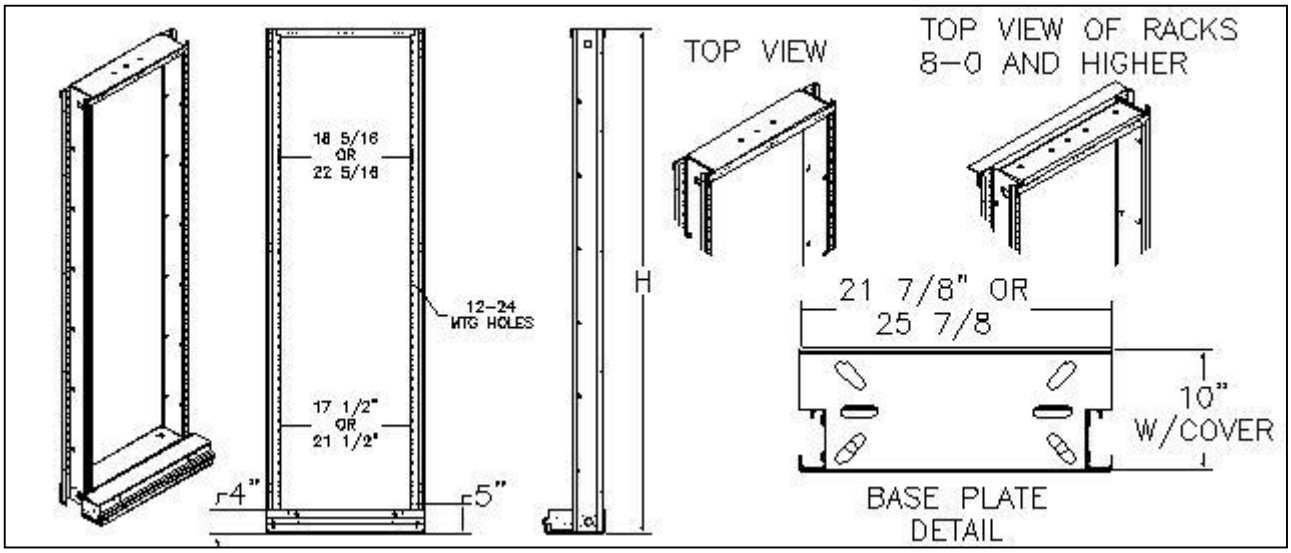

GUARD BOX NARROW FLANGE		
OPEN DUCT		
1-3/4" HOLE SPACED		
DOUBLE SIDED		
12-24 MOUNTING HOLES		
19"	HEIGHT	23"
RNE6025XXK	7'-0"	RNE6125XXK

NOTES:
- RACK SUCCESSFULLY TESTED FOR USE IN ZONE 4 BY TELCORDIA TO NEBS STANDARDS
- OTHER SIZES AND FINISHES AVAILABLE UPON REQUEST
- 9'-0" AND 11'-6" SIZES ARE MADE UP OF A 7'-0" BAY WITH A SEISMIC BAY EXTENDER
- INCLUDES RACK BASE COVER
- KIT INCLUDES BAY CONNECTING HARDWARE
- ORDER FLOOR ANCHORING AND TOP SUPPORT HARDWARE SEPARATELY

RVSD*0612

Specifications subject to change. Please contact CSF Customer Service for more information.

© copyright 2004 Central Steel Fabricators, Inc.
http://www.centralsteelfab.com ◆ 2100 Parkes Drive, Broadview, IL 60155
Phone: 708-652-2037 Fax: 708-652-7010

SEISMIC Z4 GUARD BOX NARROW FLANGE [GBNF] 1.00” MTG

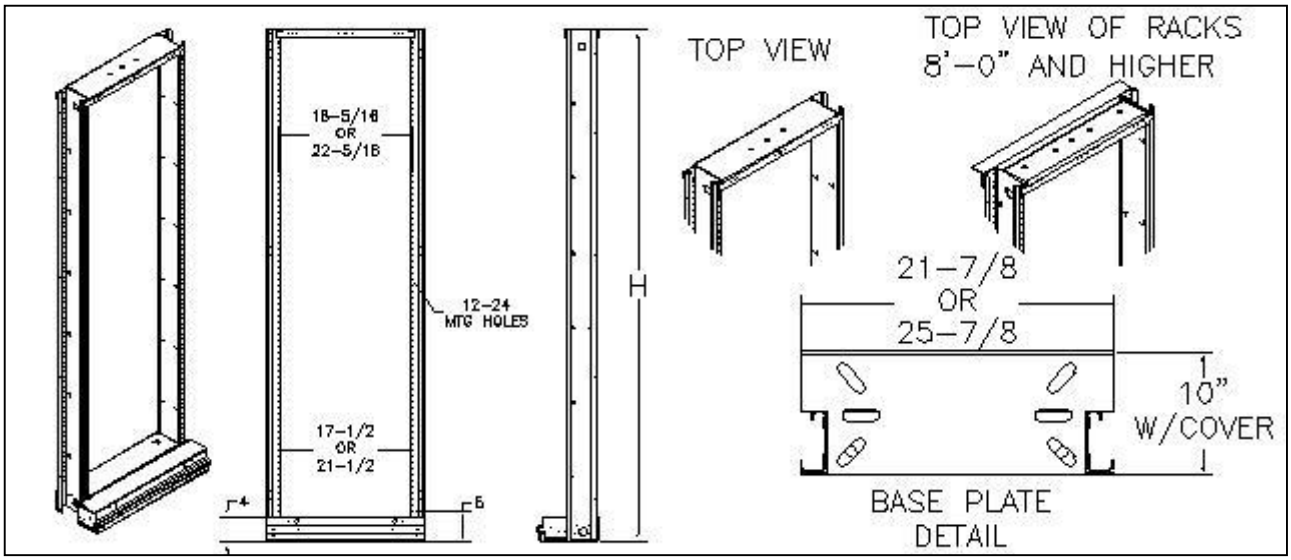

GUARD BOX NARROW FLANGE		
OPEN DUCT		
1" HOLE SPACED		
DOUBLE SPACED		
12-24 MOUNTING HOLES		
19"	HEIGHT	23"
RNE6425XXK	7'-0"	RNE6525XXK

NOTES:
- RACK SUCCESSFULLY TESTED FOR USE IN ZONE 4 BY TELCORDIA TO NEBS STANDARDS
- FINISHES: SEE TECH DATA FOR PAINT CODES
- 9’-0” AND 11’-6” SIZES ARE MADE UP OF A 7’-0” BAY WITH A SEISMIC BAY EXTENDER
- KIT INCLUDES BAY CONNECTING HARDWARE
- ORDER FLOOR ANCHORING AND TOP SUPPORT HARDWARE SEPARATELY

RVSD*0612

Specifications subject to change. Please contact CSF Customer Service for more information.

© copyright 2004 Central Steel Fabricators, Inc.
http://www.centralsteelfab.com ◆ 2100 Parkes Drive, Broadview, IL 60155
Phone: 708-652-2037 Fax: 708-652-7010

R400 Series NETWORK BAY COVER

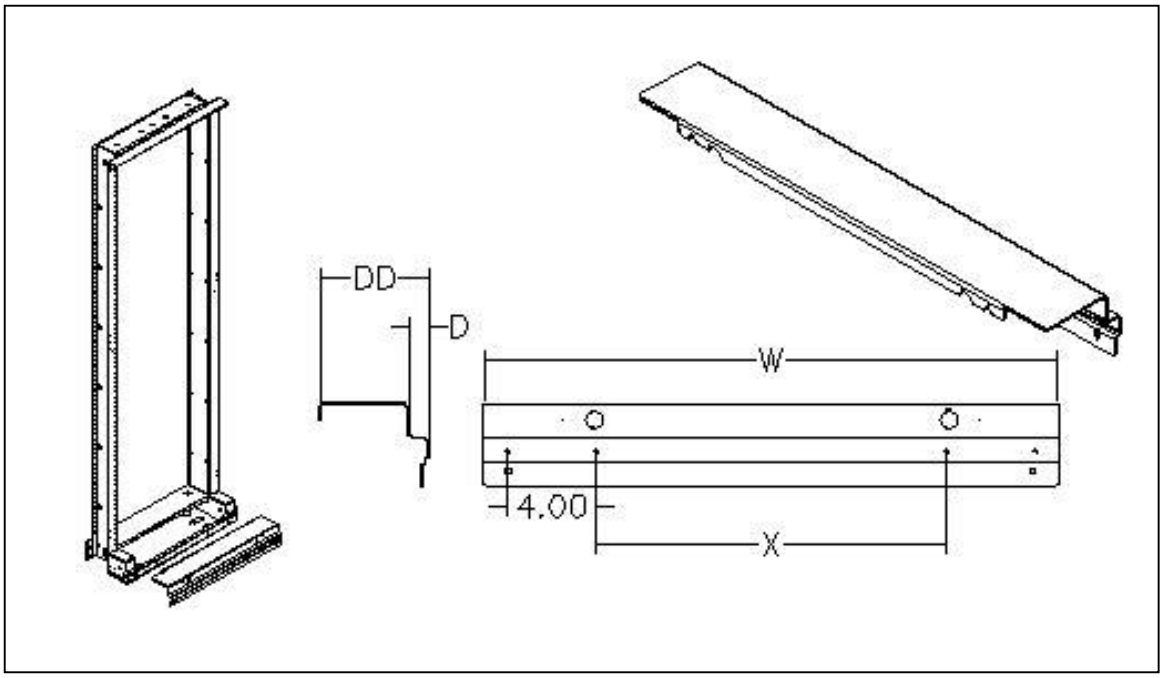

CSF#	W	X	D	DD
R400XX	26"	15.81"	1.00"	5.00"
R402XX	26"	15.81"	2.00"	6.00
R403XX	22"	11.81"	1.00"	5.00"
RNC203XX	26"	15.81"	1.00"	3.00"
RNC207XX	26"	15.81"	1.00"	7.00"
RNC208XX	26"	15.81"	1.00"	8.00"
RNC209XX	26"	15.81"	1.00"	9.00"
RNC210XX	26"	15.81"	1.00"	10.00"
RNC211XX	26"	15.81"	1.00"	11.00"
RNC212XX	26"	15.81"	1.00"	12.00"
RNC213XX	26"	15.81"	1.00"	13.00"
RNC215XX	26"	15.81"	1.00"	15.00"
RNC216XX	26"	15.81"	1.00"	16.00"
RNC217XX	26"	15.81"	1.00"	17.00"
RNC218XX	26"	15.81"	1.00"	18.00"
RNC220XX	26"	15.81"	1.00"	20.00"
RNC223XX	26"	15.81"	1.00"	23.00"

NOTES:

- CLIPS INCLUDED ON ALL COVERS OVER 10” DEEP
- FINISHES: SEE TECH DATA FOR PAINT CODES
-KIT INCLUDES ALL MOUNTING HARDWARE
- CUTOUTS PROVIDED IN FLANGE FOR MOUNTING HARDWARE CLEARANCE
- SEE RNPB AND RNPS PAGE FOR POWER STRIPS

Specifications subject to change. Please contact CSF Customer Service for more information.
© copyright 2004 Central Steel Fabricators, Inc.
http://www.centralsteelfab.com ◆ 2100 Parkes Drive, Broadview, IL 60155
Phone: 708-652-2037 Fax: 708-652-7010

NETWORK BAY FILLER PANEL & BASE FILLER UNIT W/HW

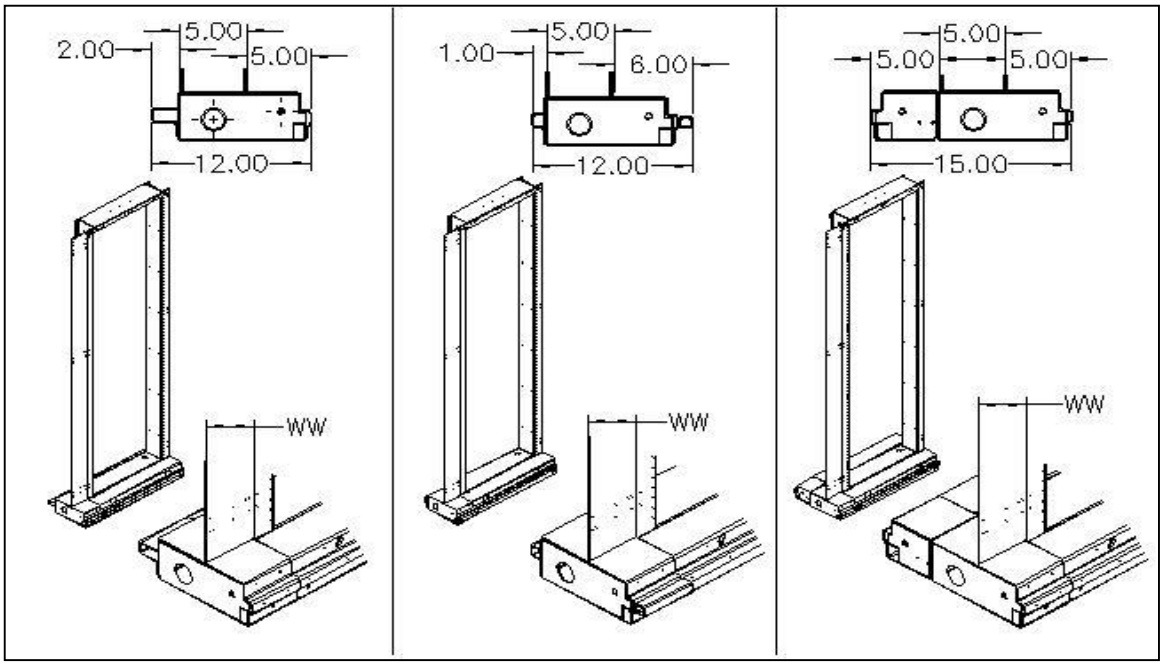

12" FOOTPRINT (5+5+2)			12" FOOTPRINT (6+5+1)			15" FOOTPRINT (5+5+5)		
CSF#	WW	L	CSF#	WW	L	CSF#	WW	L
FPA125XXK	2.50"	84.00"	FPB125XXK	2.50"	84.00"	FPC125XXK	2.50"	84.00"
FPA135XXK	2.50"	108.00"	FPB135XXK	2.50"	108.00"	FPC135XXK	2.50"	108.00"
FPA147XXK	2.50"	138.00"	FPB147XXK	2.50"	138.00"	FPC147XXK	2.50"	138.00"
FPA225XXK	5.00"	84.00"	FPB225XXK	5.00"	84.00"	FPC225XXK	5.00"	84.00"
FPA235XXK	5.00"	108.00"	FPB235XXK	5.00"	108.00"	FPC235XXK	5.00"	108.00"
FPA247XXK	5.00"	138.00"	FPB247XXK	5.00"	138.00"	FPC247XXK	5.00"	138.00"
FPA525XXK	10.00"	84.00"	FPB525XXK	10.00"	84.00"	FPC525XXK	10.00"	84.00"
FPA535XXK	10.00"	108.00"	FPB535XXK	10.00"	108.00"	FPC535XXK	10.00"	108.00"
FPA547XXK	10.00"	138.00"	FPB547XXK	10.00"	138.00"	FPC547XXK	10.00"	138.00"

NOTES:
- SEE RNFILLERPANELKIT FOR FILLER PANEL ONLY
- FINISHES: SEE TECH DATA FOR PAINT CODES
- KIT INCLUDES ALL MOUNTING HARDWARE
- OTHER SIZES AND FINISHES AVAILABLE UPON REQUEST
- BAY NOT INCLUDED

Specifications subject to change. Please contact CSF Customer Service for more information.
© copyright 2004 Central Steel Fabricators, Inc.
http://www.centralsteelfab.com ◆ 2100 Parkes Drive, Broadview, IL 60155
Phone: 708-652-2037 Fax: 708-652-7010

FP Series NETWORK BAY FILLER PANEL

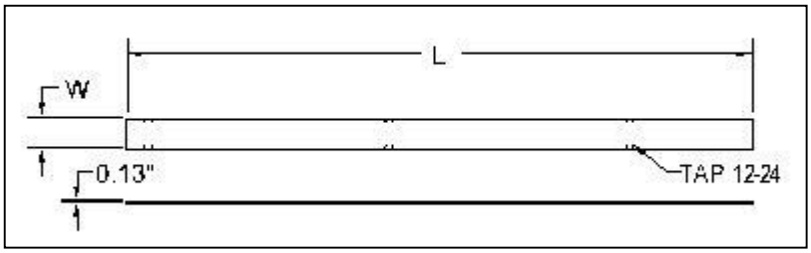

CSF#	W	L
FPX025XX	2″	79-7/8"
FPX035XX	2″	103-7/8"
FPX047XX	2″	133-7/8"
FP125XX	2-1/2"	79-7/8"
FP135XX	2-1/2"	103-7/8"
FP147XX	2-1/2"	133-7/8"
FP225XX	5"	79-7/8"
FP235XX	5"	103-7/8"
FP247XX	5"	133-7/8"
FP525XX	10"	79-7/8"
FP535XX	10"	103-7/8"
FP547XX	10"	133-7/8"

NOTES:
- FP0 SERIES IS FOR USE WITH SIGMA BAYS
- FINISHES: SEE TECH DATA FOR PAINT CODES

Specifications subject to change. Please contact CSF Customer Service for more information.
© copyright 2004 Central Steel Fabricators, Inc.
http://www.centralsteelfab.com ◆ 2100 Parkes Drive, Broadview, IL 60155
Phone: 708-652-2037 Fax: 708-652-7010

FPA Series NETWORK BAY FILLER PANEL KIT

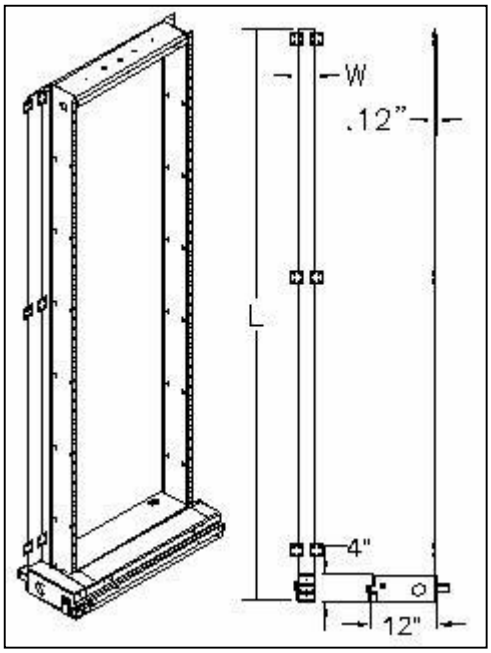

CSF#	W	L
FPA125XXK	2-1/2"	79-7/8"
FPA135XXK	2-1/2"	103-7/8"
FPA147XXK	2-1/2"	133-7/8"
FPA225XXK	5"	79-7/8"
FPA235XXK	5"	103-7/8"
FPA247XXK	5"	133-7/8"
FPA525XXK	10"	79-7/8"
FPA535XXK	10"	103-7/8"
FPA547XXK	10"	133-7/8"

NOTES:
- KIT INCLUDES ALL MOUNTING HARDWARE
- FINISHES: SEE TECH DATA FOR PAINT CODES

Specifications subject to change. Please contact CSF Customer Service for more information.
© copyright 2004 Central Steel Fabricators, Inc.
http://www.centralsteelfab.com ◆ 2100 Parkes Drive, Broadview, IL 60155
Phone: 708-652-2037 Fax: 708-652-7010

RGR Series REAR GUARD RAIL

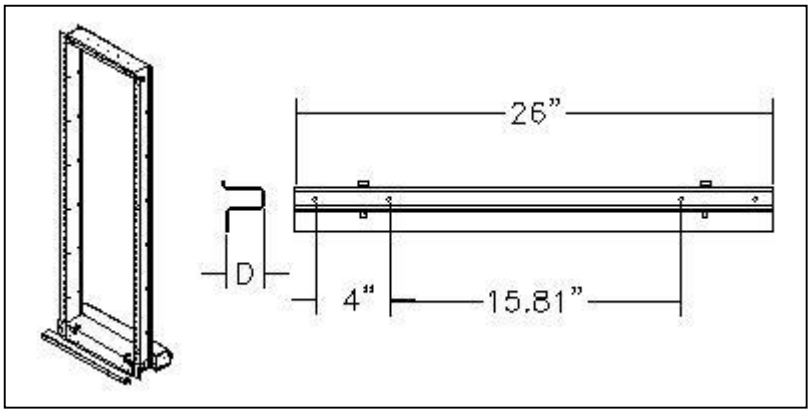

CSF#	D
RGR1XX	1"
RGR2XX	2"

NOTES:
- KIT INCLUDES ALL MOUNTING HARDWARE
- FINISHES: SEE TECH DATA FOR PAINT CODES

Specifications subject to change. Please contact CSF Customer Service for more information.
© copyright 2004 Central Steel Fabricators, Inc.
http://www.centralsteelfab.com ◆ 2100 Parkes Drive, Broadview, IL 60155
Phone: 708-652-2037 Fax: 708-652-7010

RU5 Series GUARD BOX WIDE FLANGE [GBWF] 1.75" MTG

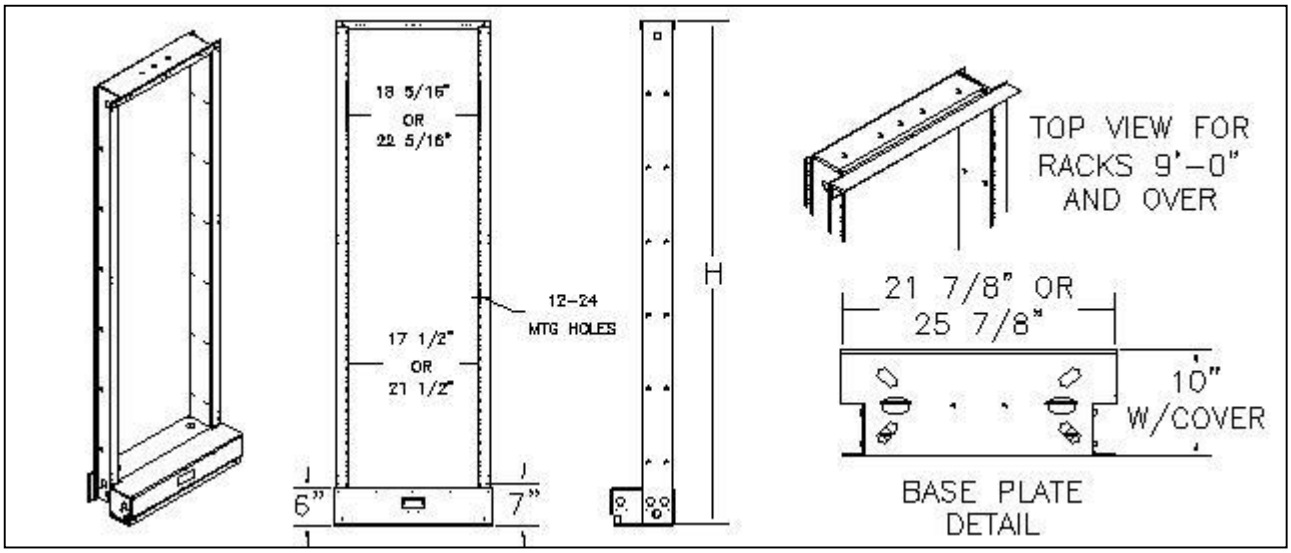

GUARD BOX WIDE FLANGE		
CLOSED DUCT		
1-3/4" HOLE SPACED		
DOUBLE SIDED		
12-24 MOUNTING HOLES		
19"	HEIGHT	23"
RU5025XXK	7'-0"	RU5125XXK

NOTES:
- FINISHES: SEE TECH DATA FOR PAINT CODES
- OTHER SIZES AND FINISHES AVAILABLE UPON REQUEST
- 9'-0" AND 11'-6" SIZES ARE MADE UP OF A 7'-0" BAY WITH A BAY EXTENDER
- KIT INCLUDES BAY CONNECTING HARDWARE
- ORDER FLOOR ANCHORING AND TOP SUPPORT HARDWARE SEPARATELY

RVSD*0612

Specifications subject to change. Please contact CSF Customer Service for more information.
© copyright 2004 Central Steel Fabricators, Inc.
http://www.centralsteelfab.com ◆ 2100 Parkes Drive, Broadview, IL 60155
Phone: 708-652-2037 Fax: 708-652-7010

RU5 Series GUARD BOX WIDE FLANGE [GBWF] 1.00" MTG

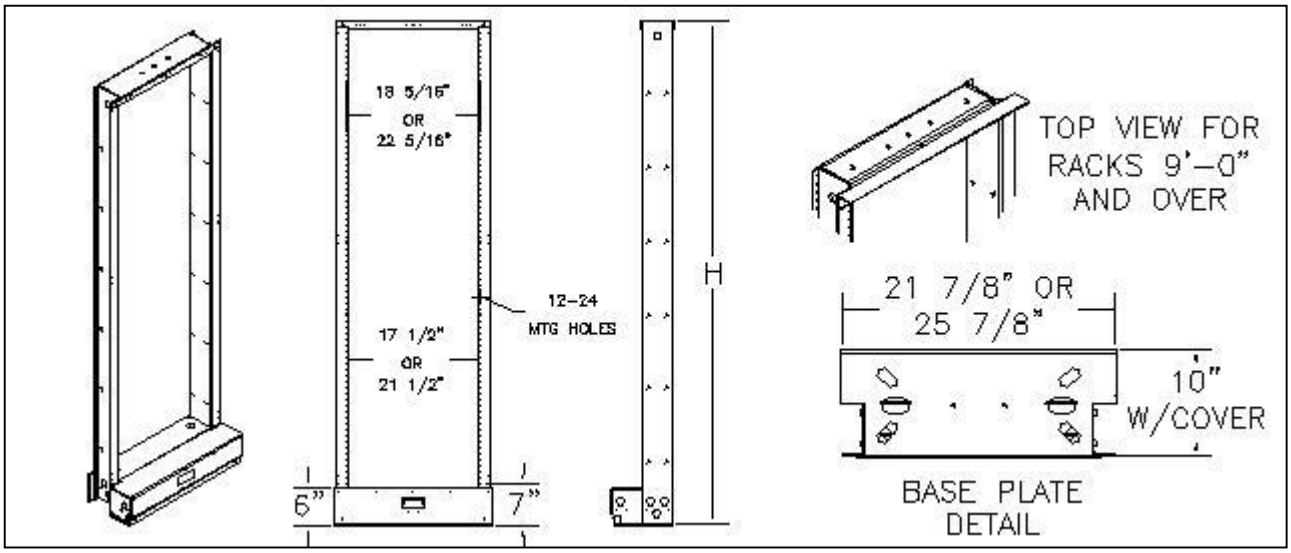

GUARD BOX WIDE FLANGE		
CLOSED DUCT		
1" HOLE SPACED		
DOUBLE SIDED		
12-24 MOUNTING HOLES		
19"	HEIGHT	23"
RU5425XXK	7'-0"	RU5525XXK

NOTES:
- FINISHES: SEE TECH DATA FOR PAINT CODES
- OTHER SIZES AND FINISHES AVAILABLE UPON REQUEST
- 9'-0" AND 11'-6" SIZES ARE MADE UP OF A 7'-0" BAY WITH A BAY EXTENDER
- KIT INCLUDES BAY CONNECTING HARDWARE
- ORDER FLOOR ANCHORING AND TOP SUPPORT HARDWARE SEPARATELY

RVSD*0612

Specifications subject to change. Please contact CSF Customer Service for more information.

© copyright 2004 Central Steel Fabricators, Inc.
http://www.centralsteelfab.com ◆ 2100 Parkes Drive, Broadview, IL 60155
Phone: 708-652-2037 Fax: 708-652-7010

RU6 Series GUARD BOX NARROW FLANGE [GBNF] 1.75” MTG

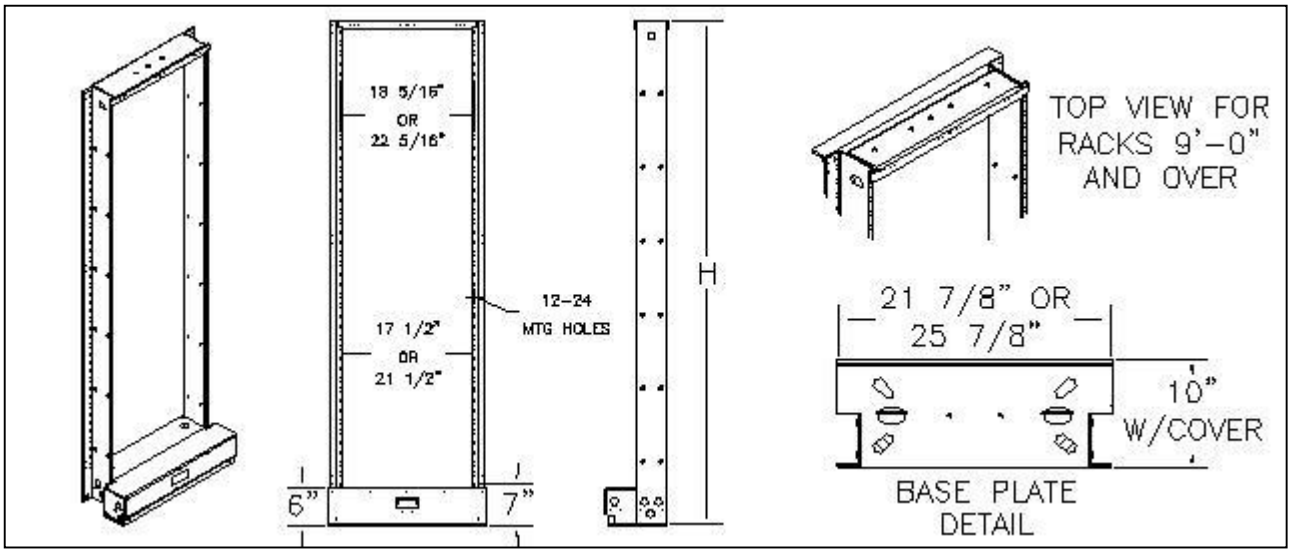

GUARD BOX NARROW FLANGE		
OPEN DUCT		
1-3/4" HOLE SPACED		
DOUBLE SIDED		
12-24 MOUNTING HOLES		
19"	HEIGHT	23"
RU6025XXK	7'-0"	RU6125XXK

NOTES:
- FINISHES: SEE TECH DATA FOR PAINT CODES
- OTHER SIZES AND FINISHES AVAILABLE UPON REQUEST
- 9’-0” AND 11’-6” SIZES ARE MADE UP OF A 7’-0” BAY WITH A BAY EXTENDER
- KIT INCLUDES BAY CONNECTING HARDWARE
- ORDER FLOOR ANCHORING AND TOP SUPPORT HARDWARE SEPARATELY

RVSD*0612

Specifications subject to change. Please contact CSF Customer Service for more information.
© copyright 2004 Central Steel Fabricators, Inc.
http://www.centralsteelfab.com ◆ 2100 Parkes Drive, Broadview, IL 60155
Phone: 708-652-2037 Fax: 708-652-7010

RU6 Series GUARD BOX NARROW FLANGE [GBNF] 1.00” MTG

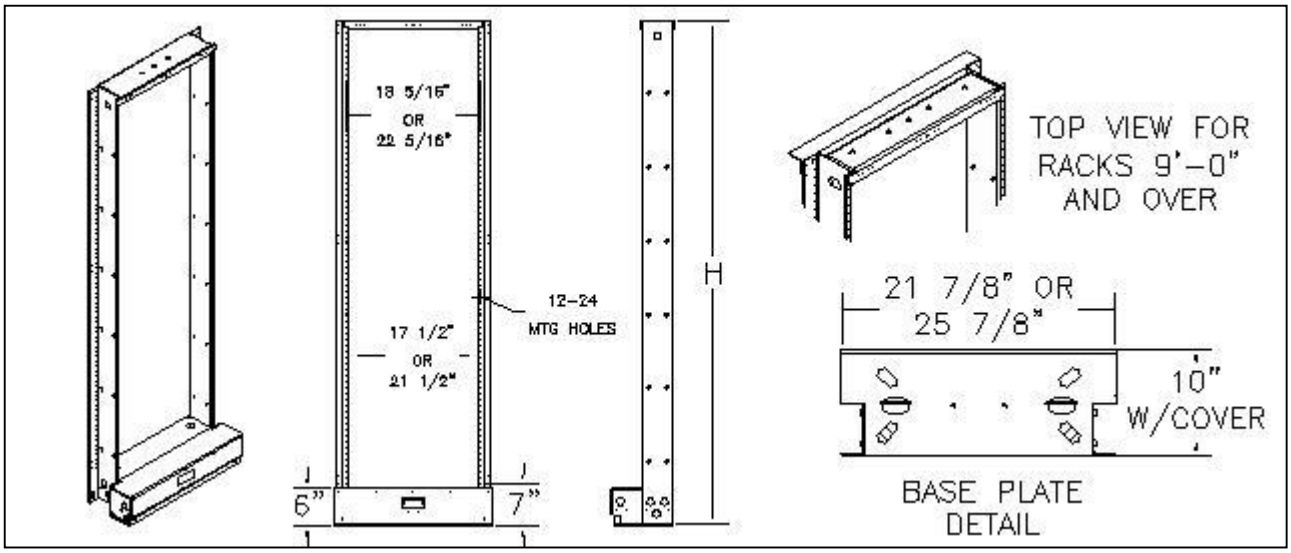

GUARD BOX NARROW FLANGE		
OPEN DUCT		
1" HOLE SPACED		
DOUBLE SIDED		
12-24 MOUNTING HOLES		
19"	HEIGHT	23"
RU6425XXK	7'-0"	RU6525XXK

NOTES:
- FINISHES: SEE TECH DATA FOR PAINT CODES
- OTHER SIZES AND FINISHES AVAILABLE UPON REQUEST
- 9’-0” AND 11’-6” SIZES ARE MADE UP OF A 7’-0” BAY WITH A BAY EXTENDER
- KIT INCLUDES BAY CONNECTING HARDWARE
- ORDER FLOOR ANCHORING AND TOP SUPPORT HARDWARE SEPARATELY

RVSD*0612

Specifications subject to change. Please contact CSF Customer Service for more information.
© copyright 2004 Central Steel Fabricators, Inc.
http://www.centralsteelfab.com ◆ 2100 Parkes Drive, Broadview, IL 60155
Phone: 708-652-2037 Fax: 708-652-7010

SEISMIC Z4 GUARD BOX WIDE FLANGE [GBWF] 1.75" MTG

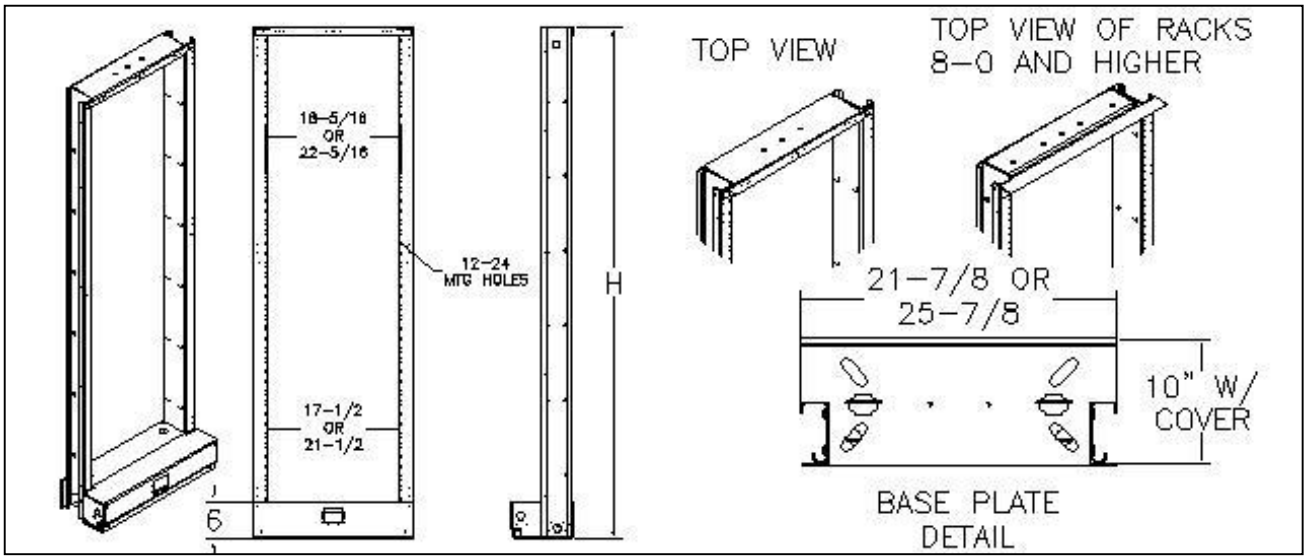

GUARD BOX WIDE FLANGE		
CLOSED DUCT		
1-3/4" HOLE SPACED		
DOUBLE SIDED		
12-24 MOUNTING HOLES		
19"	HEIGHT	23"
RUE5025XXK	7'-0"	RUE5125XXK

NOTES:
- RACK SUCCESSFULLY TESTED FOR USE IN ZONE 4 BY TELCORDIA TO NEBS STANDARDS
- FINISHES: SEE TECH DATA FOR PAINT CODES
- 9'-0" AND 11'-6" SIZES ARE MADE UP OF A 7'-0" BAY WITH A SEISMIC BAY EXTENDER
- KIT INCLUDES BAY CONNECTING HARDWARE
- ORDER FLOOR ANCHORING AND TOP SUPPORT HARDWARE SEPARATELY

RVSD*0612

Specifications subject to change. Please contact CSF Customer Service for more information.
© copyright 2004 Central Steel Fabricators, Inc.
http://www.centralsteelfab.com ◆ 2100 Parkes Drive, Broadview, IL 60155
Phone: 708-652-2037 Fax: 708-652-7010

SEISMIC Z4 GUARD BOX WIDE FLANGE [GBWF] 1.00" MTG

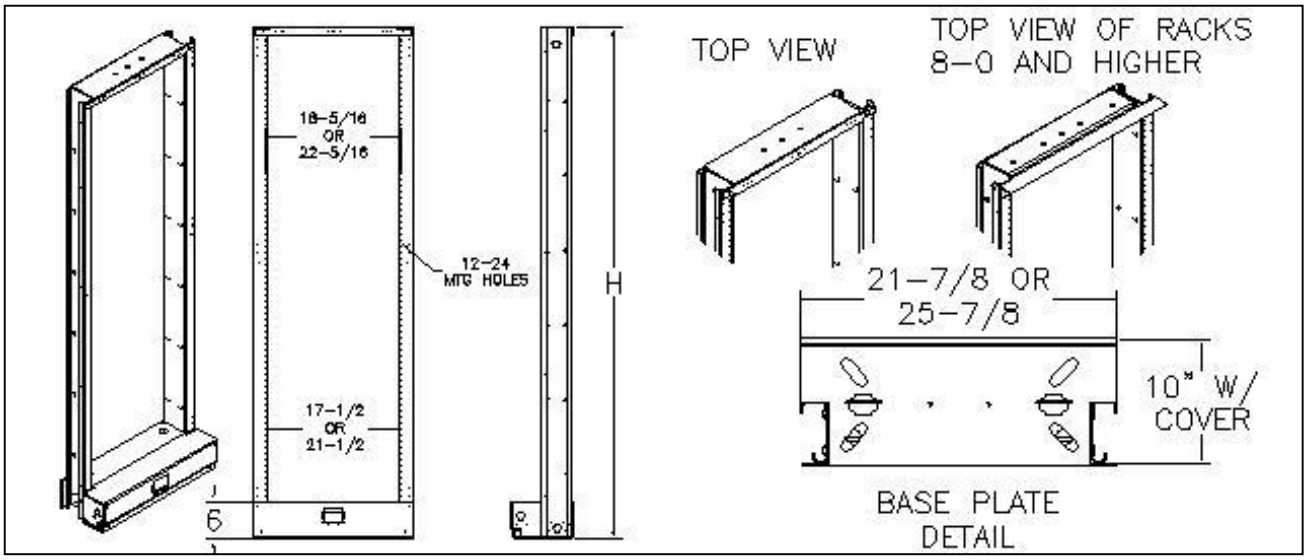

GUARD BOX WIDE FLANGE		
CLOSED DUCT		
1" HOLE SPACED		
DOUBLE SIDED		
12-24 MOUNTING HOLES		
19"	HEIGHT	23"
RUE5425XXK	7'-0"	RUE5525XXK

NOTES:
-RACK SUCCESSFULLY TESTED FOR USE IN ZONE 4 BY TELCORDIA TO NEBS STANDARDS
-FINISHES: SEE TECH DATA FOR PAINT CODES
-9'-0" AND 11'-6" SIZES ARE MADE UP OF A 7'-0" BAY WITH A SEISMIC BAY EXTENDER
-KIT INCLUDES BAY CONNECTING HARDWARE
-ORDER FLOOR ANCHORING AND TOP SUPPORT HARDWARE SEPARATELY

RVSD*0612

Specifications subject to change. Please contact CSF Customer Service for more information.
© copyright 2004 Central Steel Fabricators, Inc.
http://www.centralsteelfab.com ◆ 2100 Parkes Drive, Broadview, IL 60155
Phone: 708-652-2037 Fax: 708-652-7010

SEISMIC Z4 GUARD BOX NARROW FLANGE [GBNF] 1.75" MTG

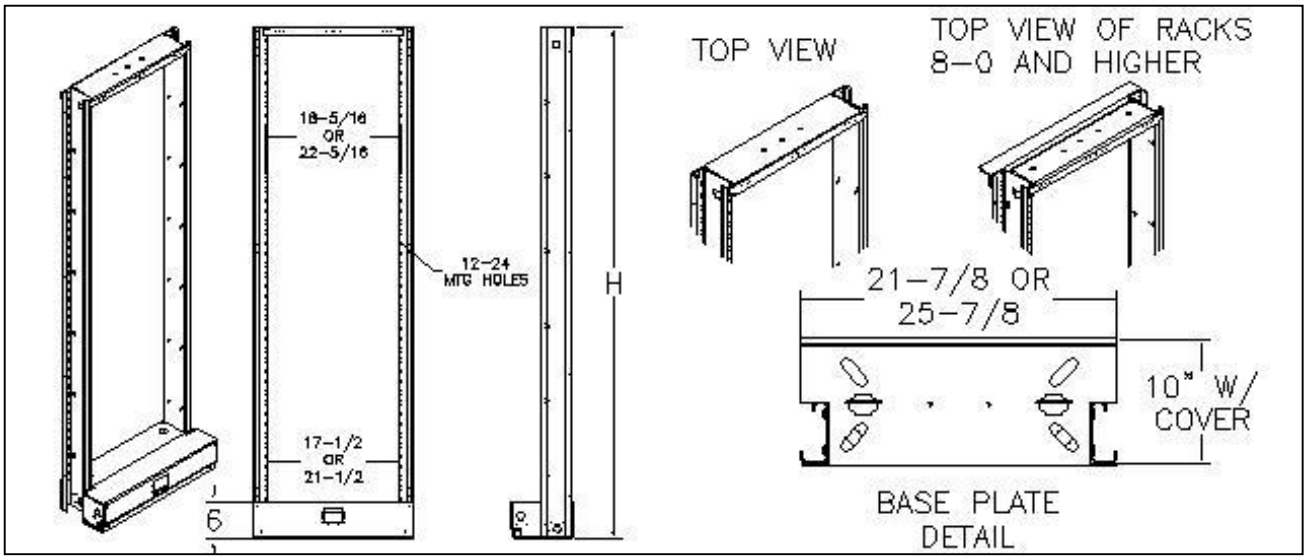

GUARD BOX NARROW FLANGE		
OPEN DUCT		
1-3/4" HOLE SPACED		
DOUBLE SIDED		
12-24 MOUNTING HOLES		
19"	HEIGHT	23"
RUE6025XXK	7'-0"	RUE6125XXK

NOTES:
-RACK SUCCESSFULLY TESTED FOR USE IN ZONE 4 BY TELCORDIA TO NEBS STANDARDS
-FINISHES: SEE TECH DATA FOR PAINT CODES
-OTHER SIZES AND FINISHES AVAILABLE UPON REQUEST
-9'-0" AND 11'-6" SIZES ARE MADE UP OF A 7'-0" BAY WITH A SEISMIC BAY EXTENDER
-KIT INCLUDES BAY CONNECTING HARDWARE
-ORDER FLOOR ANCHORING AND TOP SUPPORT HARDWARE SEPARATELY

RVSD*0612

Specifications subject to change. Please contact CSF Customer Service for more information.
© copyright 2004 Central Steel Fabricators, Inc.
http://www.centralsteelfab.com ◆ 2100 Parkes Drive, Broadview, IL 60155
Phone: 708-652-2037 Fax: 708-652-7010

SEISMIC Z4 GUARD BOX NARROW FLANGE [GBNF] 1.00” MTG

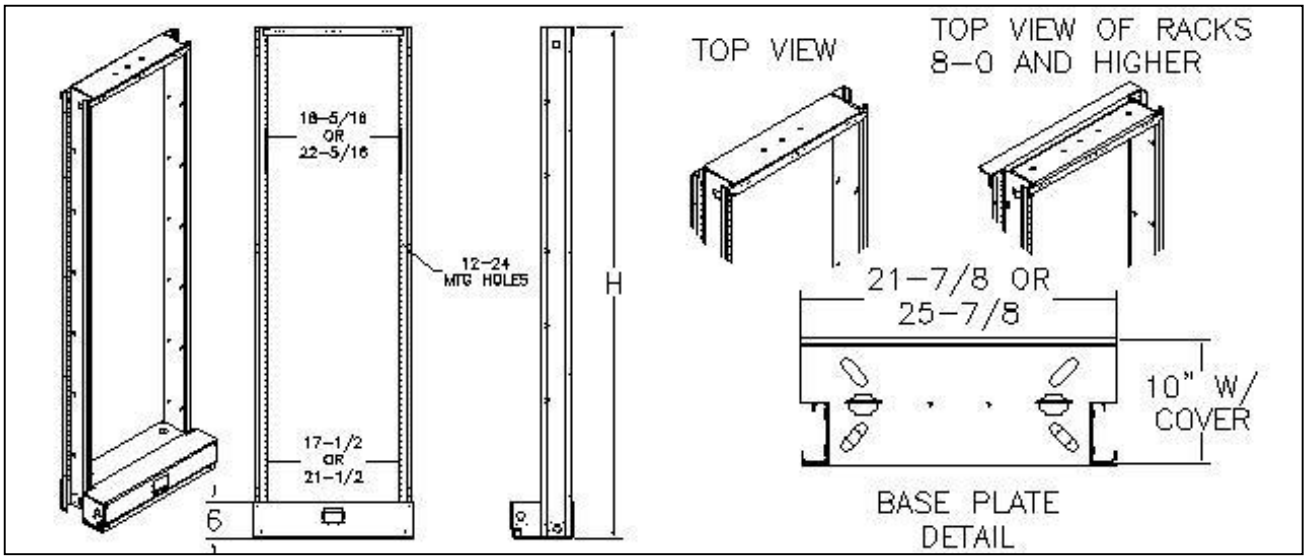

GUARD BOX NARROW FLANGE		
OPEN DUCT		
1" HOLE SPACED		
DOUBLE SIDED		
12-24 MOUNTING HOLES		
19"	HEIGHT	23"
RUE6425XXK	7'-0"	RUE6525XXK

NOTES:
-RACK SUCCESSFULLY TESTED FOR USE IN ZONE 4 BY TELCORDIA TO NEBS STANDARDS
-FINISHES: SEE TECH DATA FOR PAINT CODES
-OTHER SIZES AND FINISHES AVAILABLE UPON REQUEST
-9’-0” AND 11’-6” SIZES ARE MADE UP OF A 7’-0” BAY WITH A SEISMIC BAY EXTENDER
-KIT INCLUDES BAY CONNECTING HARDWARE
-ORDER FLOOR ANCHORING AND TOP SUPPORT HARDWARE SEPARATELY

RVSD*0612

Specifications subject to change. Please contact CSF Customer Service for more information.
© copyright 2004 Central Steel Fabricators, Inc.
http://www.centralsteelfab.com ◆ 2100 Parkes Drive, Broadview, IL 60155
Phone: 708-652-2037 Fax: 708-652-7010

FLX Series FILLER PANEL KIT W/ BASE FILLER

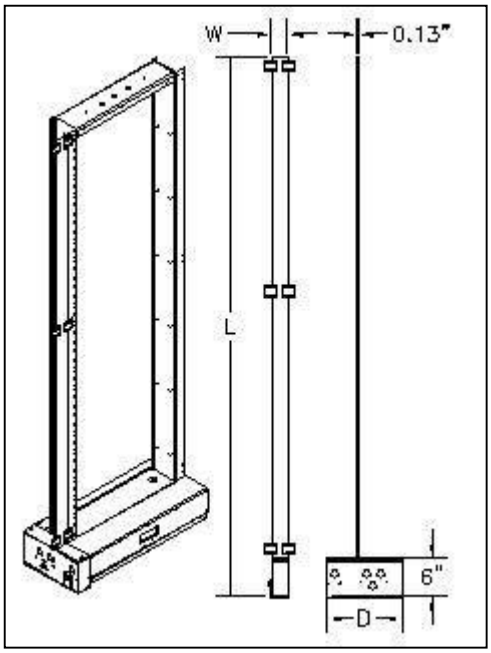

CSF#	W	D	L
FLA125XXK	2.50"	12.00"	84.00"
FLB125XXK	2.50"	15.00"	84.00"
FLA135XXK	2.50"	12.00"	108.00"
FLB135XXK	2.50"	15.00"	108.00"
FLA147XXK	2.50"	12.00"	138.00"
FLB147XXK	2.50"	15.00"	138.00"
FLA225XXK	5.00"	12.00"	84.00"
FLB225XXK	5.00"	15.00"	84.00"
FLA235XXK	5.00"	12.00"	108.00"
FLB235XXK	5.00"	15.00"	108.00"
FLA247XXK	5.00"	12.00"	138.00"
FLB247XXK	5.00"	15.00"	138.00"
FLA525XXK	10.00"	12.00"	84.00"
FLA535XXK	10.00"	12.00"	108.00"
FLA547XXK	10.00"	12.00"	138.00"

NOTES:
- KIT INCLUDES ALL MOUNTING HARDWARE, FILLER PANEL, AND BASE FILLER
- OTHER SIZES AND FINISHES AVAILABLE UPON REQUEST

Specifications subject to change. Please contact CSF Customer Service for more information.
© copyright 2004 Central Steel Fabricators, Inc.
http://www.centralsteelfab.com ◆ 2100 Parkes Drive, Broadview, IL 60155
Phone: 708-652-2037 Fax: 708-652-7010

FL Series UNEQUAL FLANGE FILLER PANEL

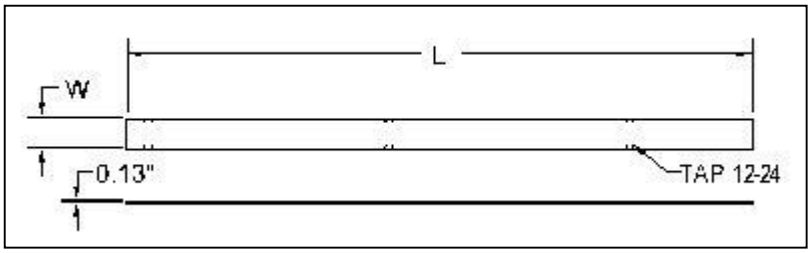

CSF#	W	L
FL125XX	2 1/2"	77 7/8'
FL135XX	2 1/2"	101 7/8"
FL147XX	2 1/2"	131 7/8"
FL225XX	5"	77 7/8"
FL235XX	5"	101 7/8"
FL247XX	5"	131 7/8"
FL525XX	10"	78 7/8'
FL535XX	10"	101 7/8"
FL547XX	10"	131 7/8"

NOTES:
- FINISHES: SEE TECH DATA FOR PAINT CODES

Specifications subject to change. Please contact CSF Customer Service for more information.
© copyright 2004 Central Steel Fabricators, Inc.
http://www.centralsteelfab.com ◆ 2100 Parkes Drive, Broadview, IL 60155
Phone: 708-652-2037 Fax: 708-652-7010

FLA Series FILLER PANEL KIT W/ BASE FILLER

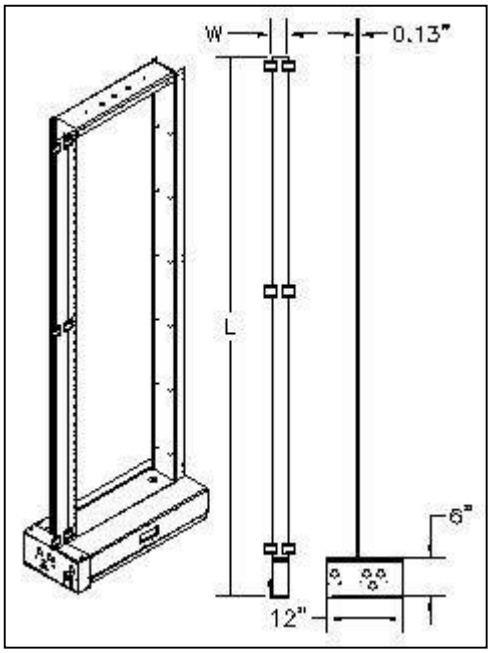

CSF#	W	L
FLA125XXK	2 1/2"	77 7/8'
FLA135XXK	2 1/2"	101 7/8"
FLA147XXK	2 1/2"	131 7/8"
FLA225XXK	5"	77 7/8"
FLA235XXK	5"	101 7/8"
FLA247XXK	5"	131 7/8"
FLA525XXK	10"	78 7/8'
FLA535XXK	10"	101 7/8"
FLA547XXK	10"	131 7/8"

NOTES:
- KIT INCLUDES ALL MOUNTING HARDWARE AND BASE FILLER
- FINISHES: SEE TECH DATA FOR PAINT CODES

Specifications subject to change. Please contact CSF Customer Service for more information.
© copyright 2004 Central Steel Fabricators, Inc.
http://www.centralsteelfab.com ◆ 2100 Parkes Drive, Broadview, IL 60155
Phone: 708-652-2037 Fax: 708-652-7010

FLC1XXXXK - Series [FILLER PANEL + BASE FILLER 2.50”]

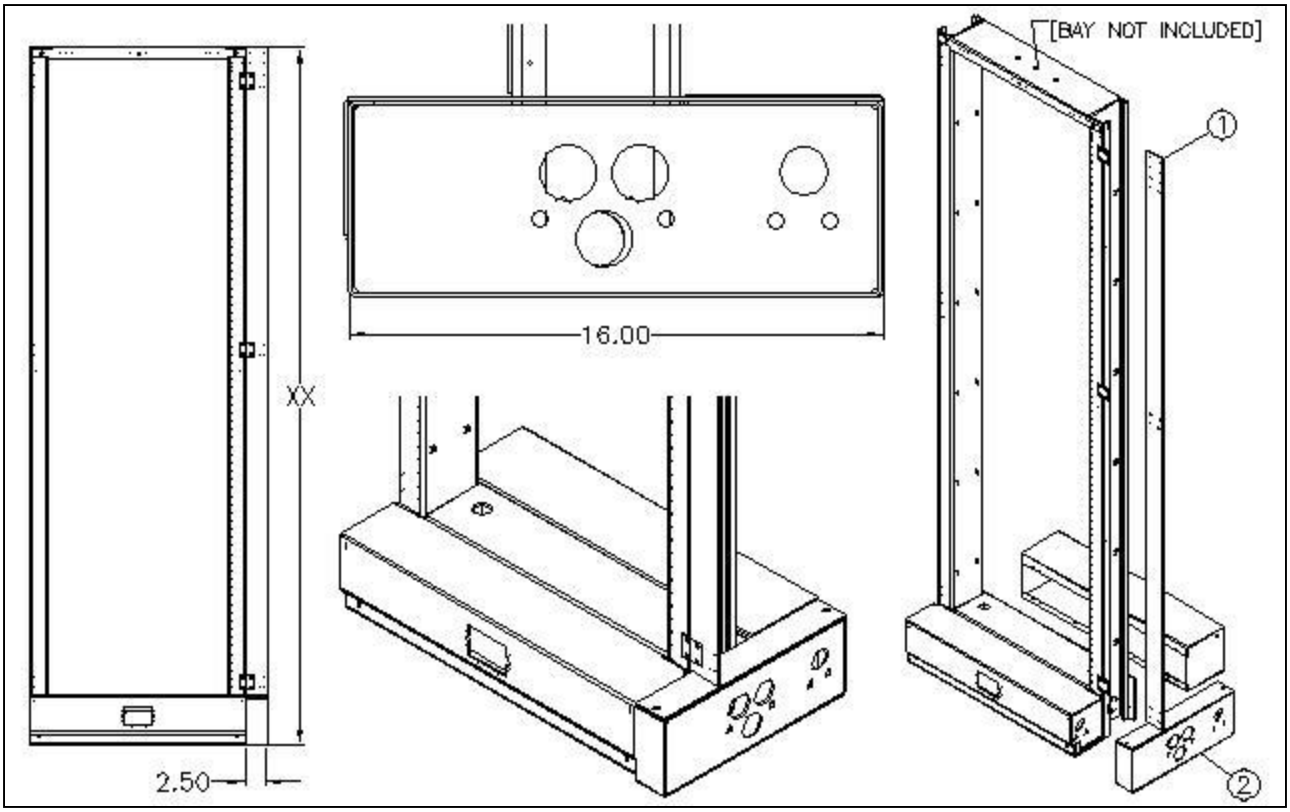

FLC1XXXXK – FILLER PANEL + BASE FILLER 2.50”	
CSF#	DESCRIPTION
FLC125XXK	FILLER PANEL + BASE FILLET 2.50” X 7’-0” X 16 RU
FLC135XXK	FILLER PANEL + BASE FILLET 2.50” X 9’-0” X 16 RU
FLC147XXK	FILLER PANEL + BASE FILLET 2.50” X 11’-6” X 16 RU

NOTES:
- FINISHES: SEE TECH DATA FOR PAINT CODES

Specifications subject to change. Please contact CSF Customer Service for more information.
© copyright 2004 Central Steel Fabricators, Inc.
http://www.centralsteelfab.com ◆ 2100 Parkes Drive, Broadview, IL 60155
Phone: 708-652-2037 Fax: 708-652-7010

FLC2XXXXK - Series [FILLER PANEL + BASE FILLER 5.00”]

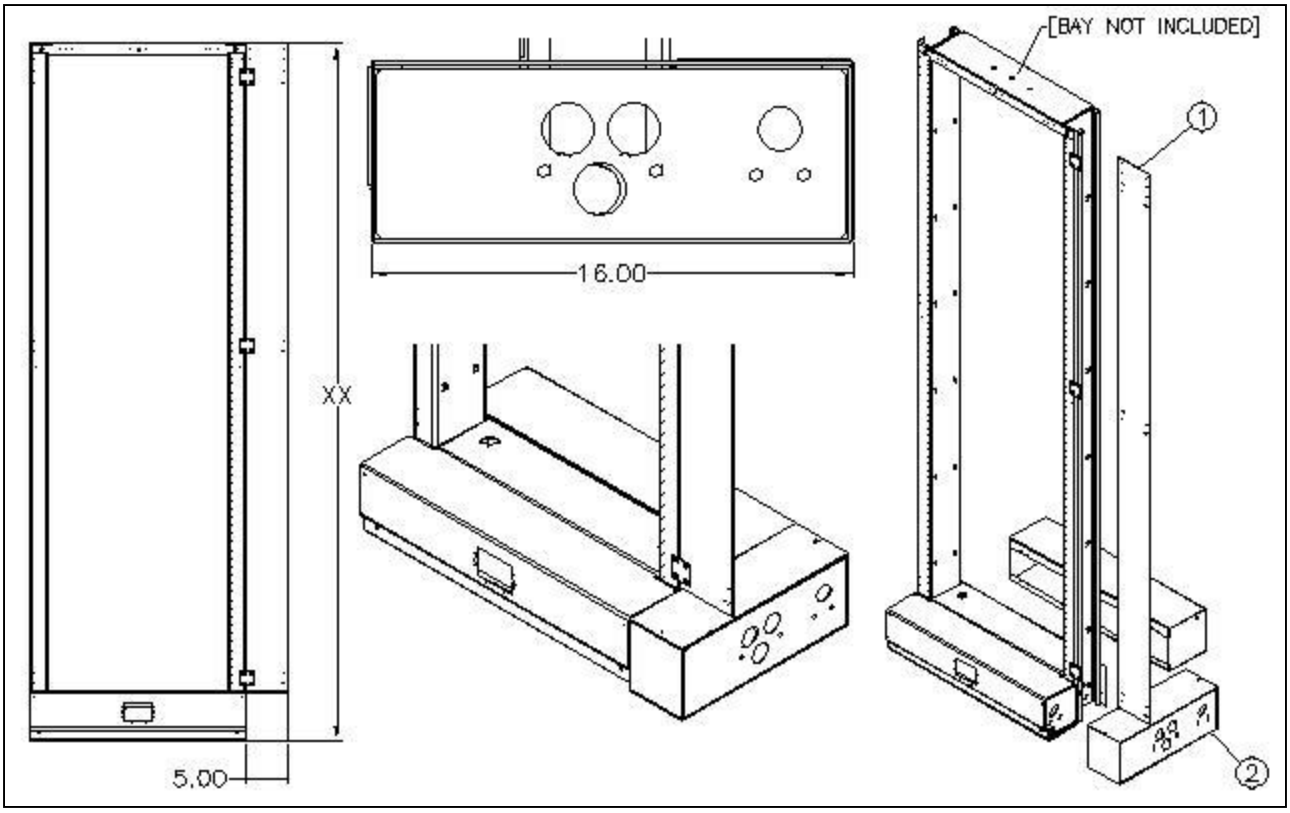

FLC2XXXXK – FILLER PANEL + BASE FILLER 5.00”	
CSF#	DESCRIPTION
FLC225XXK	FILLER PANEL + BASE FILLET 5.00” X 7’-0” X 16 RU
FLC235XXK	FILLER PANEL + BASE FILLET 5.00” X 9’-0” X 16 RU
FLC247XXK	FILLER PANEL + BASE FILLET 5.00” X 11’-6” X 16 RU

NOTES:
- FINISHES: SEE TECH DATA FOR PAINT CODES

Specifications subject to change. Please contact CSF Customer Service for more information.
© copyright 2004 Central Steel Fabricators, Inc.
http://www.centralsteelfab.com ◆ 2100 Parkes Drive, Broadview, IL 60155
Phone: 708-652-2037 Fax: 708-652-7010

IP Series NETWORK RACK INSULATING PADS AND KITS

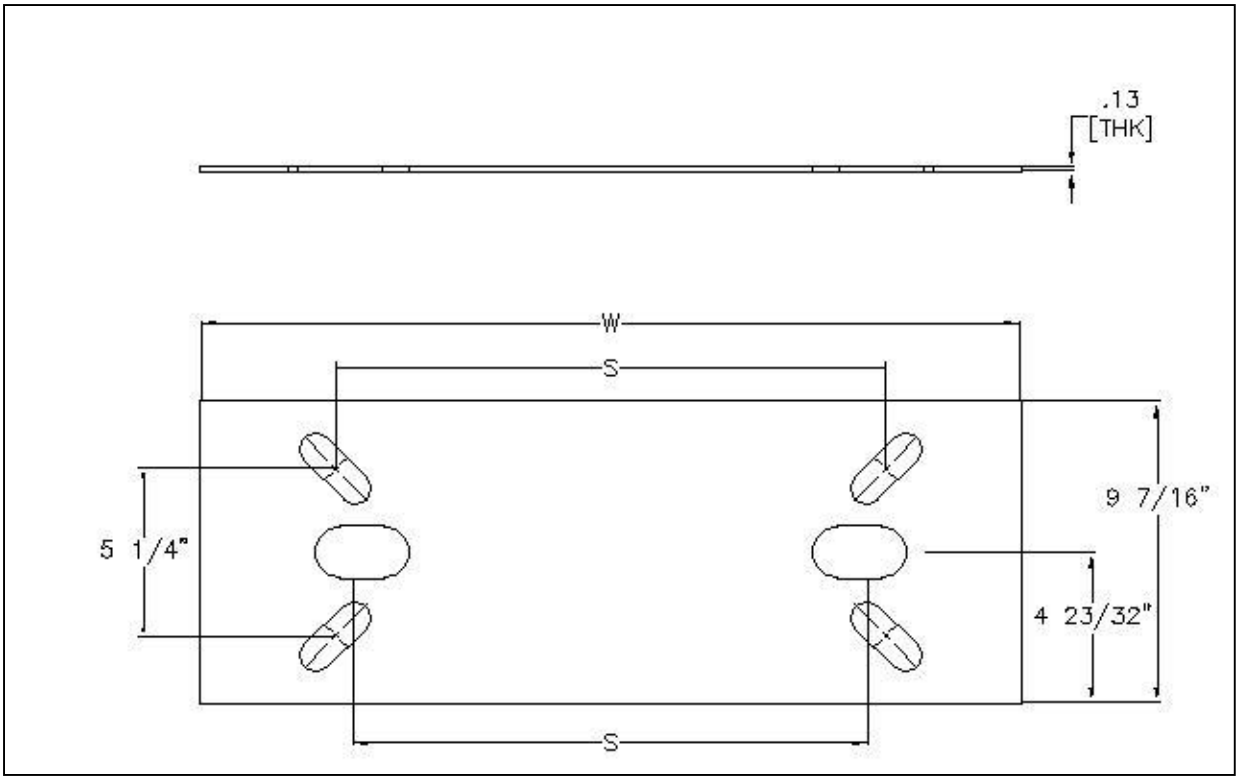

PADS			
CSF#	W	S	s
IP9131	21 11/16"	11 5/8"	13 1/4"
IP9132	25 11/16"	15 5/8"	17 1/4"
KITS			
CSF#	W	S	s
IP1701	21 11/16"	11 5/8"	13 1/4"
IP1801	25 11/16"	15 5/8"	17 1/4"
IP1802	25 11/16"	15 5/8"	17 1/4"

NOTES:
- KIT INCLUDES ALL MOUNTING HARDWARE AND PADS

RVSD*0611

Specifications subject to change. Please contact CSF Customer Service for more information.

© copyright 2004 Central Steel Fabricators, Inc.
http://www.centralsteelfab.com ◆ 2100 Parkes Drive, Broadview, IL 60155
Phone: 708-652-2037 Fax: 708-652-7010

WHBX19XX - Series WIRE HARNESS BRACKET

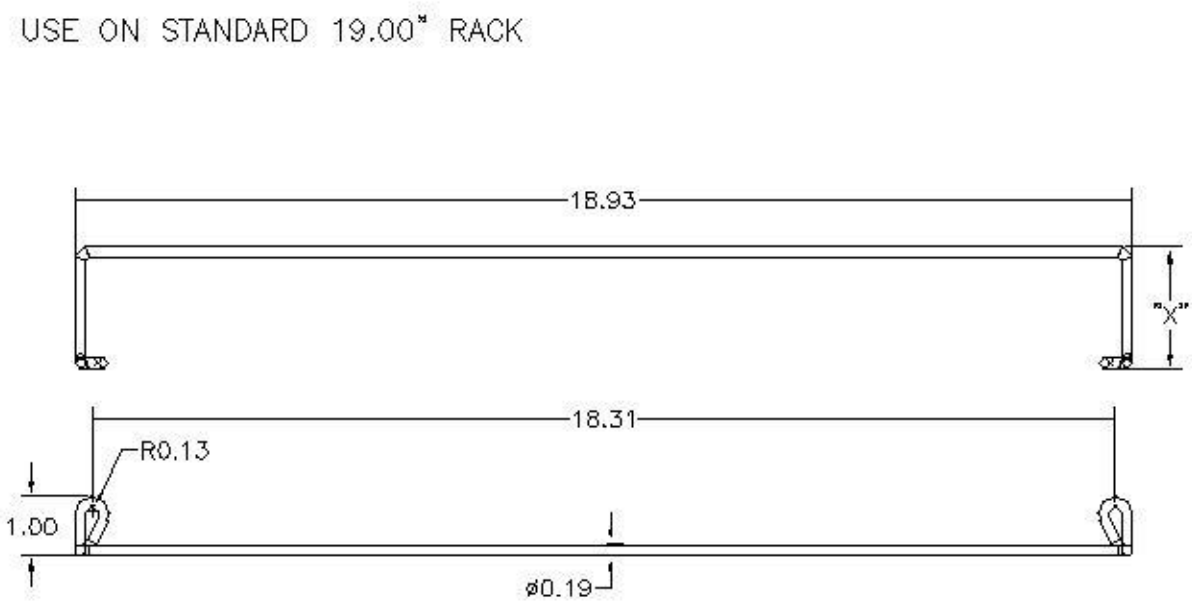

CSF#	X
WHB019XX	0.00"
WHB219XX	2.00"
WHB319XX	3.00"
WHB419XX	4.00"
WHB519XX	5.00"
WHB819XX	8.00"

NOTES:

- KIT INCLUDES ALL MOUNTING HARDWARE
- FINISHES: SEE TECH DATA FOR PAINT CODES

RVSD*0413

Specifications subject to change. Please contact CSF Customer Service for more information.

© copyright 2004 Central Steel Fabricators, Inc.
http://www.centralsteelfab.com ◆ 2100 Parkes Drive, Broadview, IL 60155
Phone: 708-652-2037 Fax: 708-652-7010

WHBX23XX - Series WIRE HARNESS BRACKET

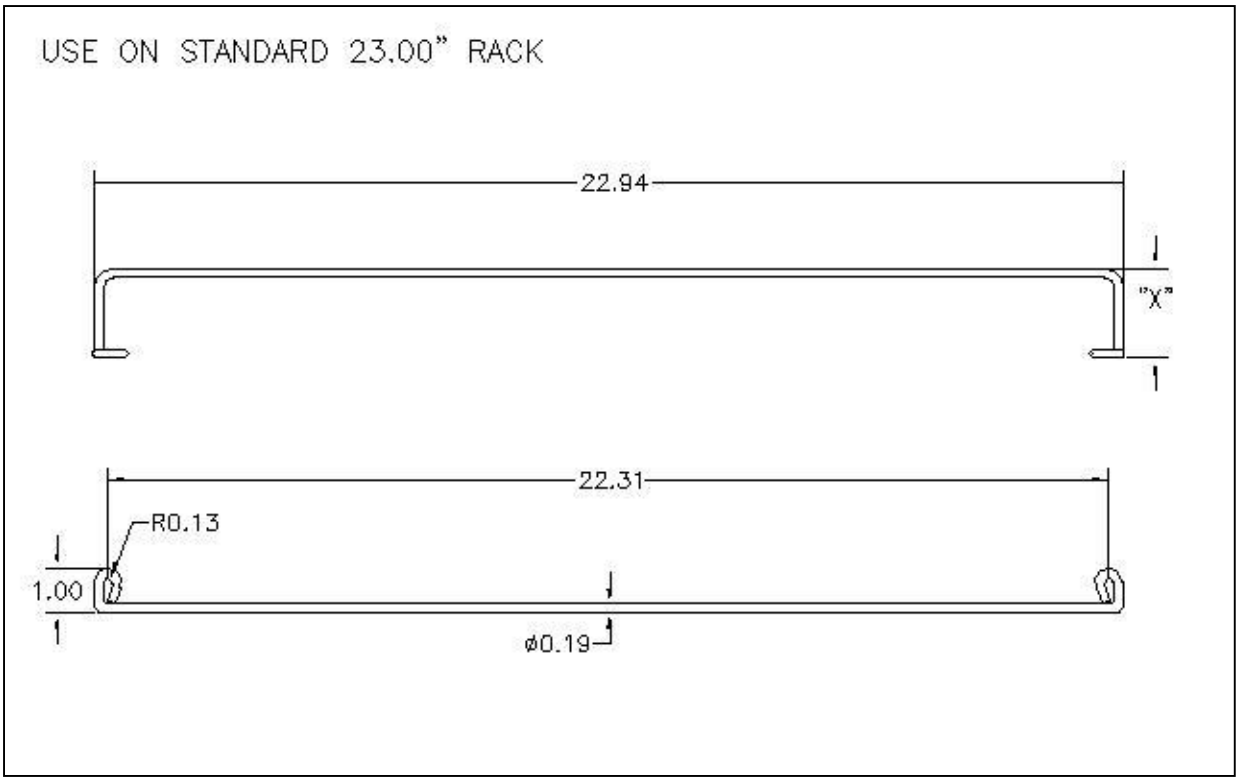

CSF#	X
WHB023XX	0.00"
WHB123XX	1.00"
WHB223XX	2.00"
WHB323XX	3.00"
WHB423XX	4.00"
WHB523XX	5.00"
WHB823XX	8.00"

NOTES:
- KIT INCLUDES ALL MOUNTING HARDWARE
- FINISHES: SEE TECH DATA FOR PAINT CODES

RVSD*0413

Specifications subject to change. Please contact CSF Customer Service for more information.

© copyright 2004 Central Steel Fabricators, Inc.
http://www.centralsteelfab.com ◆ 2100 Parkes Drive, Broadview, IL 60155
Phone: 708-652-2037 Fax: 708-652-7010

CLB Series CABLE LACING BRACKET

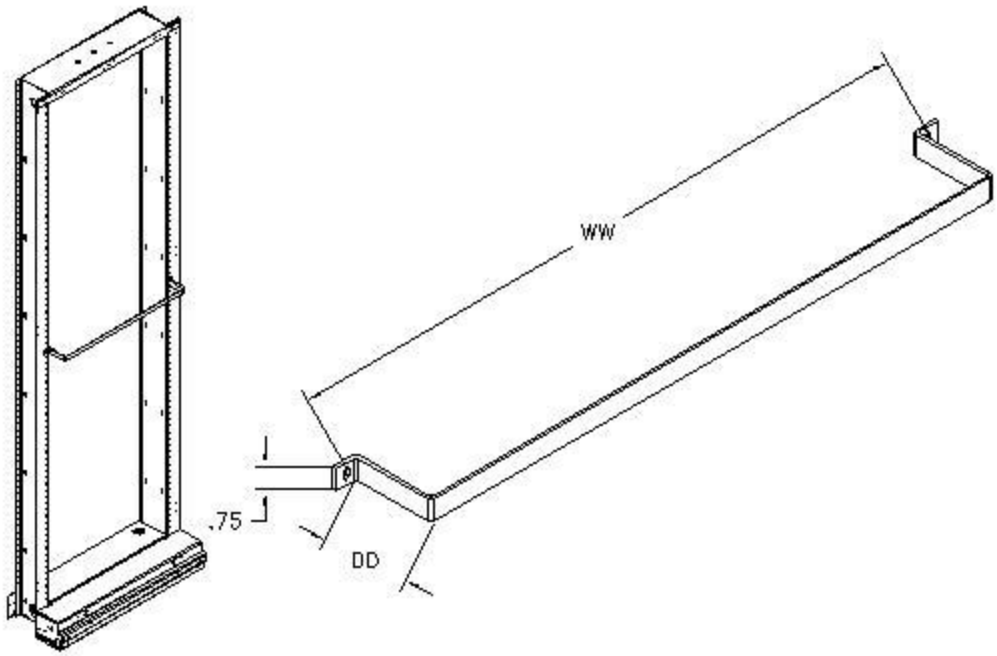

FOR 23" RACKS		
CSF#	DD	WW
CLB023XXK	0.00"	22.31"
CLB123XXK	1.00"	22.31"
CLB2315XXK	1.50"	22.31"
CLB223XXK	2.00"	22.31"
CLB323XXK	3.00"	22.31"
CLB423XXK	4.00"	22.31"
CLB523XXK	5.00"	22.31"
CLB623XXK	6.00"	22.31"
CLB723XXK	7.00"	22.31"
CLB823XXK	8.00"	22.31"
CLB1023XXK	10.00"	22.31"
CLB1223XXK	12.00"	22.31"
CLB1423XXK	14.00"	22.31"
CLB1623XXK	16.00"	22.31"
CLB1723XXK	17.00"	22.31"
CLB2023XXK	20.00"	22.31"

FOR 19" RACKS		
CSF#	DD	WW
CLB019XXK	0.00"	18.31"
CLB119XXK	1.00"	18.31"
CLB1915XXK	1.50"	18.31"
CLB219XXK	2.00"	18.31"
CLB319XXK	3.00"	18.31"
CLB419XXK	4.00"	18.31"
CLB519XXK	5.00"	18.31"
CLB619XXK	6.00"	18.31"
CLB719XXK	7.00"	18.31"
CLB819XXK	8.00"	18.31"
CLB1019XXK	10.00"	18.31"
CLB1219XXK	12.00"	18.31"
CLB1819XXK	18.00"	18.31"

RVSD*0413

NOTES:

- FINISHES: SEE TECH DATA FOR PAINT CODES
- KIT INCLUDES ALL MOUNTING HARDWARE

Specifications subject to change. Please contact CSF Customer Service for more information.

© copyright 2004 Central Steel Fabricators, Inc.
http://www.centralsteelfab.com ◆ 2100 Parkes Drive, Broadview, IL 60155
Phone: 708-652-2037 Fax: 708-652-7010

RN BASE EXTENDER

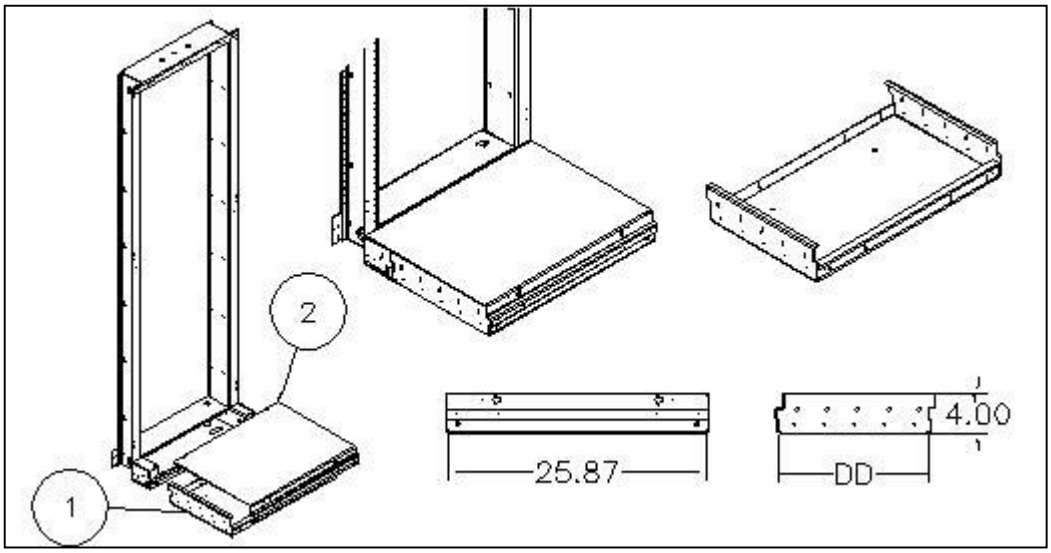

CSF #	DD	PART 1	PART 2	COVER DEPTH
RNB323XXK08	3"	RNB323XX	RNC208XX	8"
RNB1323XXK	8"	RNB0823XX	RNC213XX	13"
RNB1623XXK	11"	RNB1123XX	RNC216XX	16"
RNB1523XXK20	15"	RNB1523XX	RNC220XX	20"

NOTES:
- KIT ASSUMES EXISTING 5" FIXED GUARD BOX AND INCLUDES A COVER THAT IS 5" DEEPER THAN THE BASE EXTENDER.
- KIT INCLUDES ALL MOUNTING HARDWARE
- FINISHES: SEE TECH DATA FOR PAINT CODES

Specifications subject to change. Please contact CSF Customer Service for more information.
© copyright 2004 Central Steel Fabricators, Inc.
http://www.centralsteelfab.com ◆ 2100 Parkes Drive, Broadview, IL 60155
Phone: 708-652-2037 Fax: 708-652-7010

RN REMOVABLE GUARD BOX WITH COVER

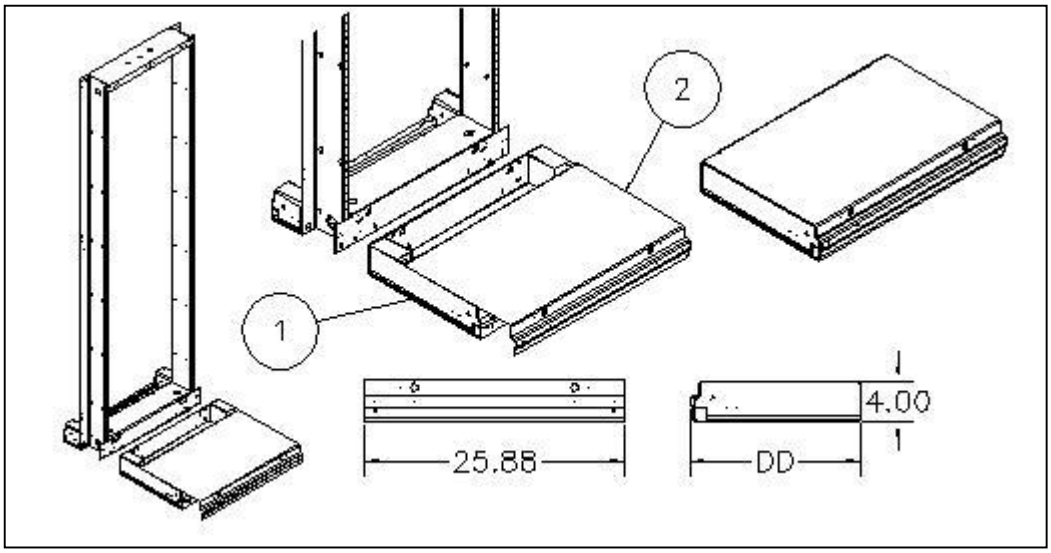

CSF #	PART 1	PART 2	DD
RNR823XXK	RNR823XX	RNC208XX	8"
RNR1223XXK	RNR1223XX	RNC212XX	12"
RNR1323XXK	RNR1323XX	RNC213XX	13"
RNR1523XXK	RNR1523XX	RNC215XX	15"
RNR1723XXK	RNR1723XX	RNC217XX	17"
RNR2023XXK	RNR2023XX	RNC220XX	20"

NOTES:
- FINISHES: SEE TECH DATA FOR PAINT CODES
- KIT INCLUDES ALL MOUNTING HARDWARE

Specifications subject to change. Please contact CSF Customer Service for more information.
© copyright 2004 Central Steel Fabricators, Inc.
http://www.centralsteelfab.com ◆ 2100 Parkes Drive, Broadview, IL 60155
Phone: 708-652-2037 Fax: 708-652-7010

SIGMA Series RNX BAY

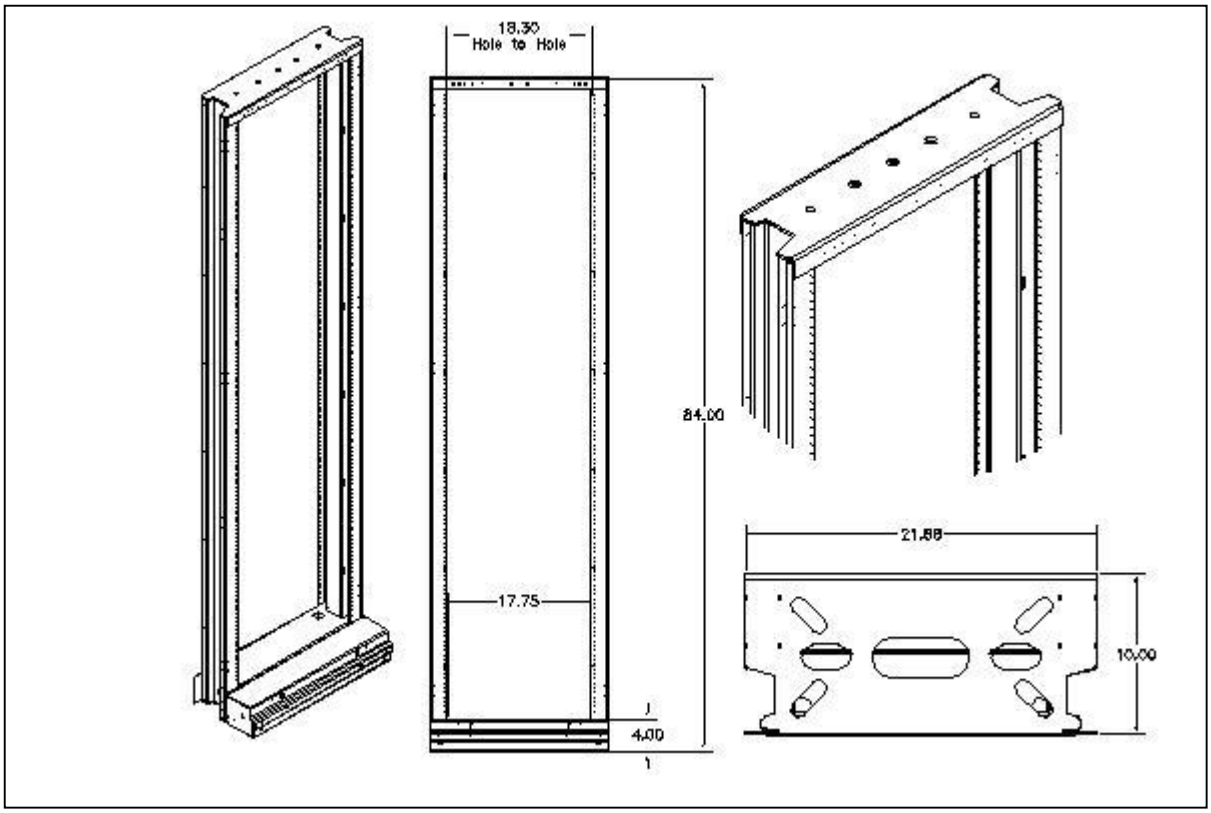

GUARD BOX WIDE FLANGE CLOSE DUCT 1-3/4" MOUNTING WITH 5/8"-5/8"-1/2" SPACING 12-24 MOUNTING HOLES	
CSF #	HEIGHT
RNX0425XXK	7'-0"

NOTES:
- MOUNTING HOLE PATTERN IS 1-3/4" WITH HOLES SPACED 5/8"-5/8"-1/2"
- BAY MEASURES 17-3/4" BETWEEN THE UPRIGHTS
- OTHER SIZES AND FINISHES AVAILABLE UPON REQUEST
- KIT INCLUDES BAY CONNECTING HARDWARE
- ORDER FLOOR ANCHORING AND TOP SUPPORT HARDWARE SEPARATELY

Specifications subject to change. Please contact CSF Customer Service for more information.
© copyright 2004 Central Steel Fabricators, Inc.
http://www.centralsteelfab.com ◆ 2100 Parkes Drive, Broadview, IL 60155
Phone: 708-652-2037 Fax: 708-652-7010

SIGMA Series BASE FILLER

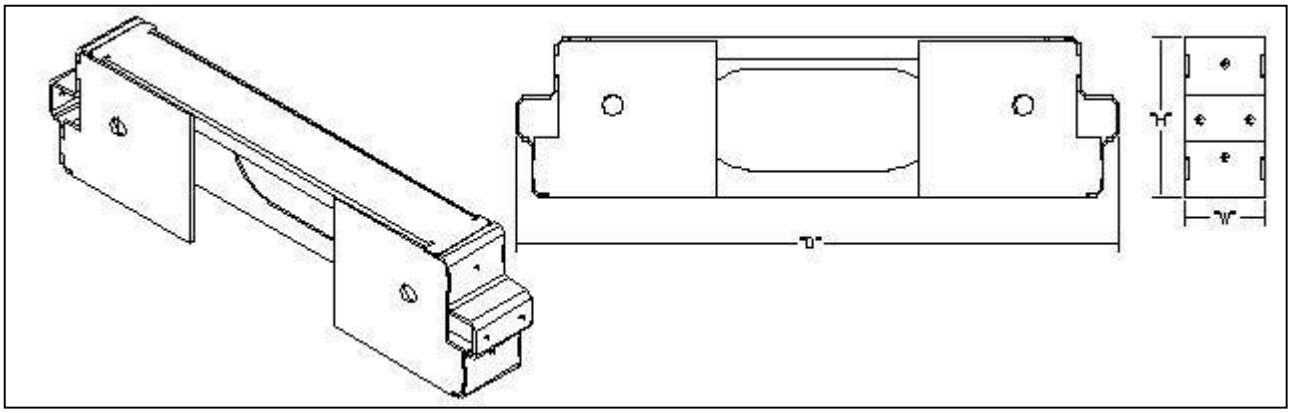

CSF #	D	W	H
BFX0215XX	15"	2"	4"

NOTES:
- INCLUDES REMOVABLE COVER
- KIT INCLUDES ALL MOUNTING HARDWARE
- OTHER SIZES AND FINISHES AVAILABLE UPON REQUEST

Specifications subject to change. Please contact CSF Customer Service for more information.

© copyright 2004 Central Steel Fabricators, Inc.
http://www.centralsteelfab.com ◆ 2100 Parkes Drive, Broadview, IL 60155
Phone: 708-652-2037 Fax: 708-652-7010

SIGMA Series 5" REMOVABLE BASE

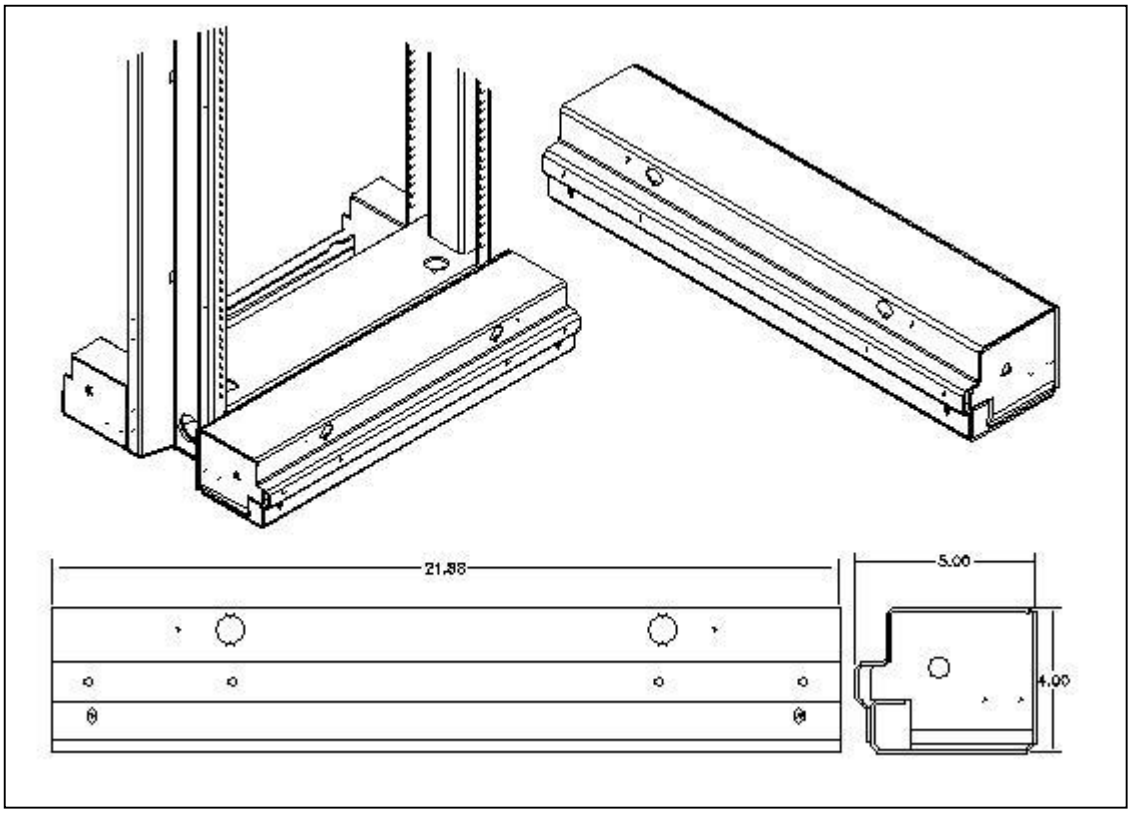

CSF #	D	W	H
RNR514XXK	55"	19"	4"

NOTES:
- INCLUDES REMOVABLE COVER
- KIT INCLUDES ALL MOUNTING HARDWARE
- OTHER SIZES AND FINISHES AVAILABLE UPON REQUEST

Specifications subject to change. Please contact CSF Customer Service for more information.

© copyright 2004 Central Steel Fabricators, Inc.
http://www.centralsteelfab.com ◆ 2100 Parkes Drive, Broadview, IL 60155
Phone: 708-652-2037 Fax: 708-652-7010

SIGMA Series BASE FILLER EXTENSION

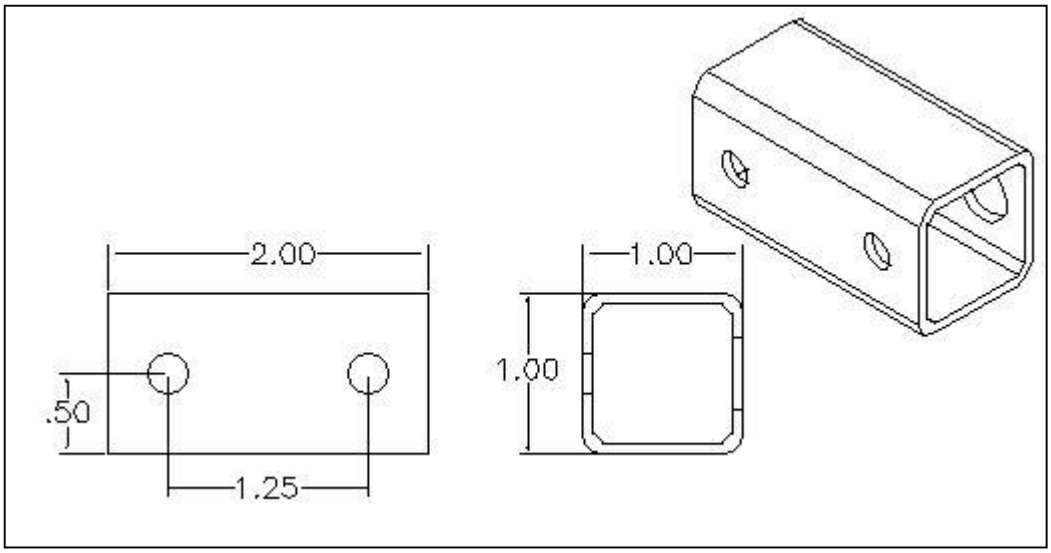

CSF #	D	W	H
BFEX0201XX	1"	2"	1"

NOTES:
- KIT INCLUDES ALL MOUNTING HARDWARE
- OTHER SIZES AND FINISHES AVAILABLE UPON REQUEST

Specifications subject to change. Please contact CSF Customer Service for more information.
© copyright 2004 Central Steel Fabricators, Inc.
http://www.centralsteelfab.com ◆ 2100 Parkes Drive, Broadview, IL 60155
Phone: 708-652-2037 Fax: 708-652-7010

SIGMA Series GUARD RAIL EXTENSION

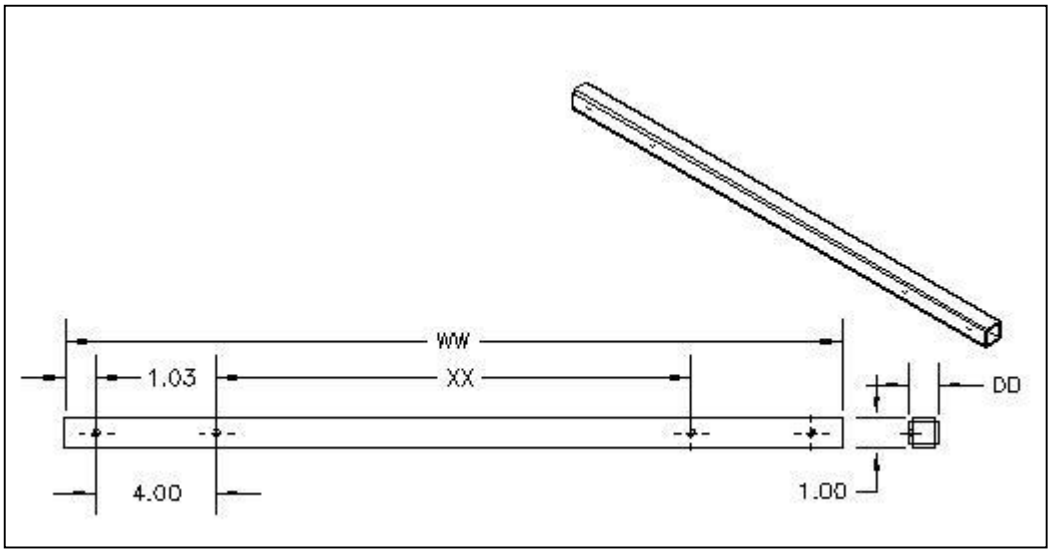

CSF #	WW	XX	DD
GREX01XX	21.88	N/A	1"
GRE01XX	25.88	15.82	1"
GRE02XX	25.88	15.82	2"
GRE03XX	25.88	15.82	3"

NOTES:

- KIT INCLUDES ALL MOUNTING HARDWARE AND GUARD RAIL ADAPTER

Specifications subject to change. Please contact CSF Customer Service for more information.
© copyright 2004 Central Steel Fabricators, Inc.
http://www.centralsteelfab.com ◆ 2100 Parkes Drive, Broadview, IL 60155
Phone: 708-652-2037 Fax: 708-652-7010

SIGMA Series END GUARD

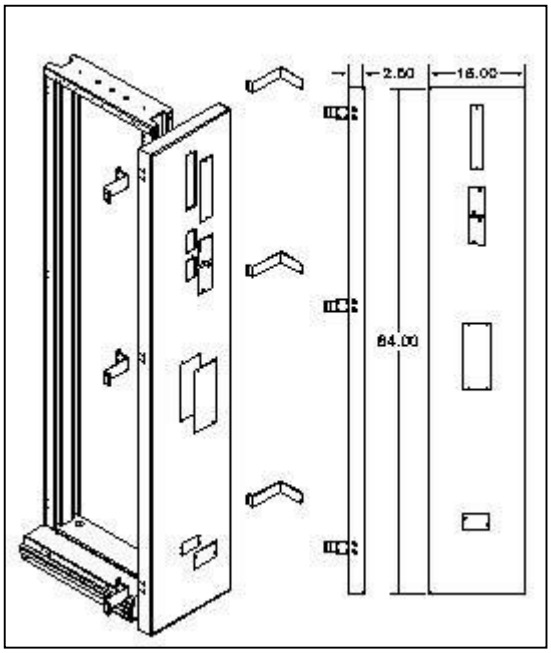

CSF #	D	W	H
EGX1625XXK	16"	2"	7'-0"
EGX1635XXK	16"	2"	9'-0"
EGX1647XXK	16"	2"	11'-6"

NOTES:

- KIT INCLUDES MOUNTING HARDWARE TO OFFSET END GUARD 2" FROM BAY TO ACCOMMODATE 2" FILLER PANEL
- BRACKETS TO MOUNT END GUARD DIRECTLY ON BAY ARE AVAILABLE
- FINISHES: SEE TECH DATA FOR PAINT CODES

Specifications subject to change. Please contact CSF Customer Service for more information.
© copyright 2004 Central Steel Fabricators, Inc.
http://www.centralsteelfab.com ◆ 2100 Parkes Drive, Broadview, IL 60155
Phone: 708-652-2037 Fax: 708-652-7010

SIGMA Series EXTENSION RACK

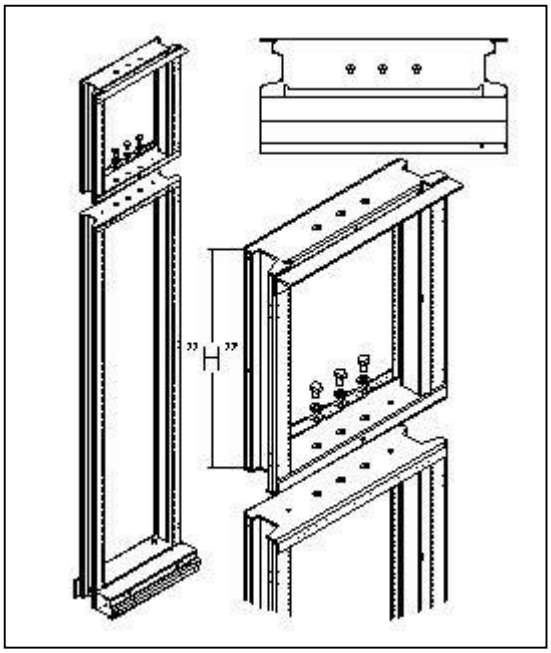

SIGMA EXTENSION RACK	
CSF #	H
RXX0402XX	24"
RXX0412XX	54"

NOTES:
- KIT INCLUDES MOUNTING HARDWARE
- MOUNTING HOLE PATTERN IS 1-3/4" WITH HOLES SPACED 5/8"-5/8"-1/2"
- FINISHES: SEE TECH DATA FOR PAINT CODES

Specifications subject to change. Please contact CSF Customer Service for more information.
© copyright 2004 Central Steel Fabricators, Inc.
http://www.centralsteelfab.com ◆ 2100 Parkes Drive, Broadview, IL 60155
Phone: 708-652-2037 Fax: 708-652-7010

EGX16XX SIGMA Series END GUARD

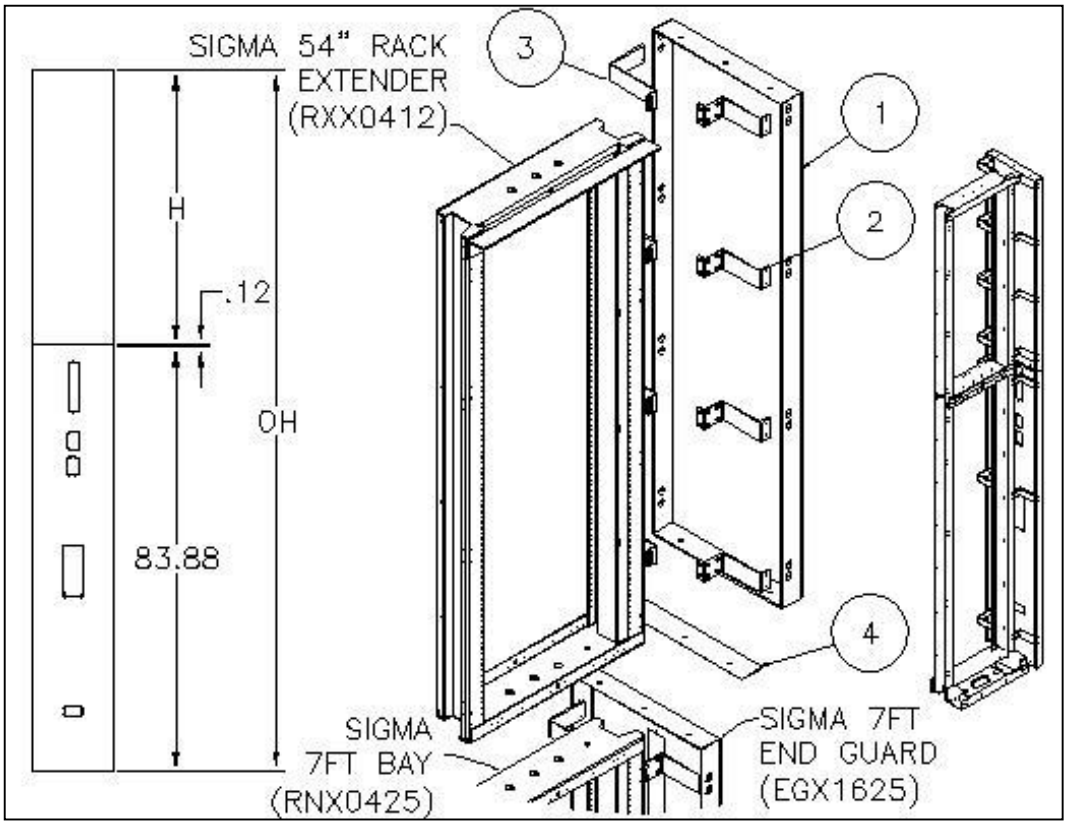

SIGMA END GUARD EXTENSION		
CSF #	H	OH
EGX1602XX	24.00	108.00
EGX1612XX	54.00	138.00

NOTES:
- KIT INCLUDES MOUNTING HARDWARE TO OFFSET END GUARD 2" FROM BAY TO ACCOMMODATE 2" FILLER PANEL
- FINISHES: SEE TECH DATA FOR PAINT CODES

Specifications subject to change. Please contact CSF Customer Service for more information.
© copyright 2004 Central Steel Fabricators, Inc.
http://www.centralsteelfab.com ◆ 2100 Parkes Drive, Broadview, IL 60155
Phone: 708-652-2037 Fax: 708-652-7010

Bay Junction Kit

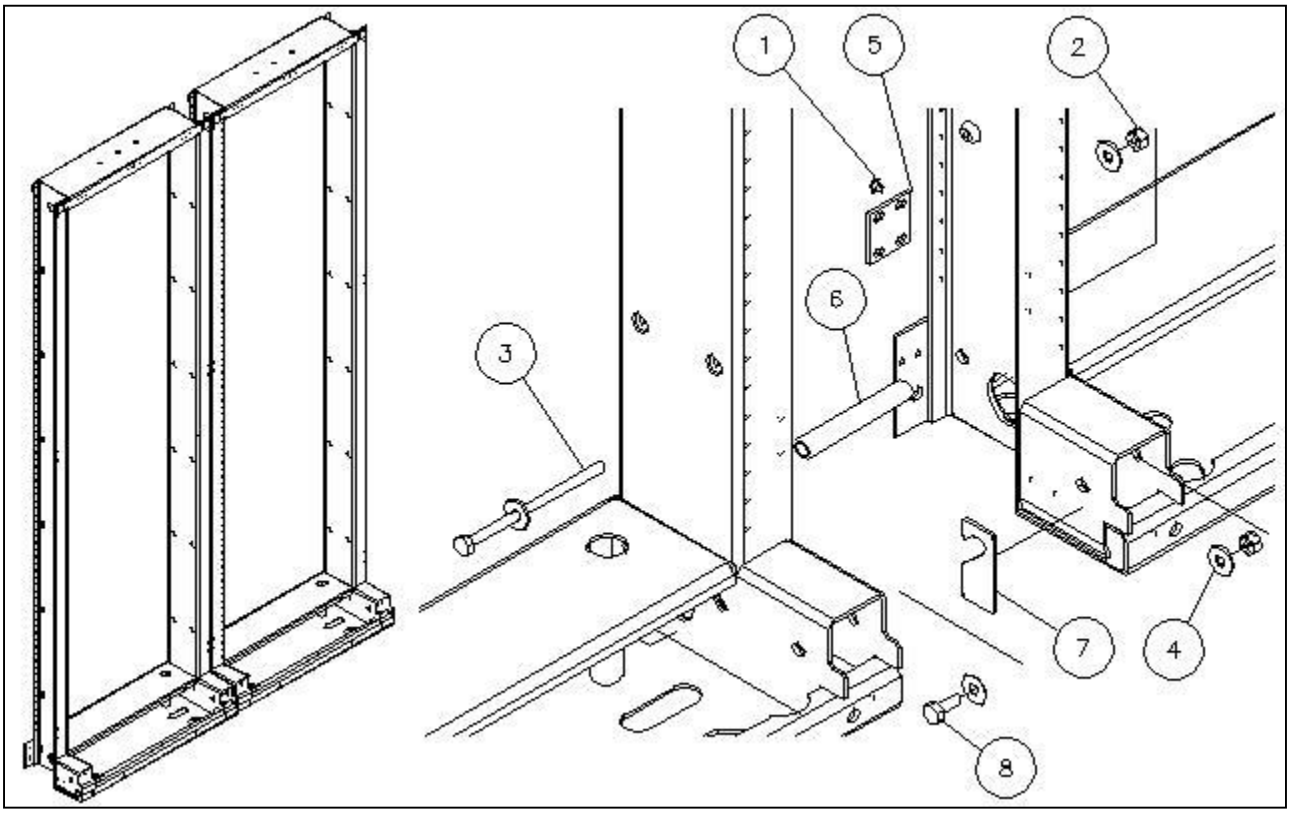

BAY JUNCTION KIT – JK0301			
ITEM	QTY	CSF#	DESCRIPTION
1	16	PH0400FST	12-24 X 1/4 PH PHIL CUTTING ZY
2	2	HN146	3/8 – 16 HEX NUT ZY
3	1	HH1020	3/8 – 16 HHCS X 5-1/2 ZY
4	4	FW166	3/8 FLAT WASHER ZY
5	4	R507	SLOTTED CONNECTOR PLATE ZY
6	1	A8171	SPACER TUBE BETWEEN BAYS 4-1/4 ZY
7	1	R500	BAY SPACER BRACKET
8	1	HH1004	3/8 – 16 HHCS X 7/8 ZY

NOTES:

- NETWORK BAYS NOT INCLUDED

Specifications subject to change. Please contact CSF Customer Service for more information.

© copyright 2004 Central Steel Fabricators, Inc.
http://www.centralsteelfab.com ◆ 2100 Parkes Drive, Broadview, IL 60155
Phone: 708-652-2037 Fax: 708-652-7010

DCE2405WHK – Drop Ceiling Enclosure

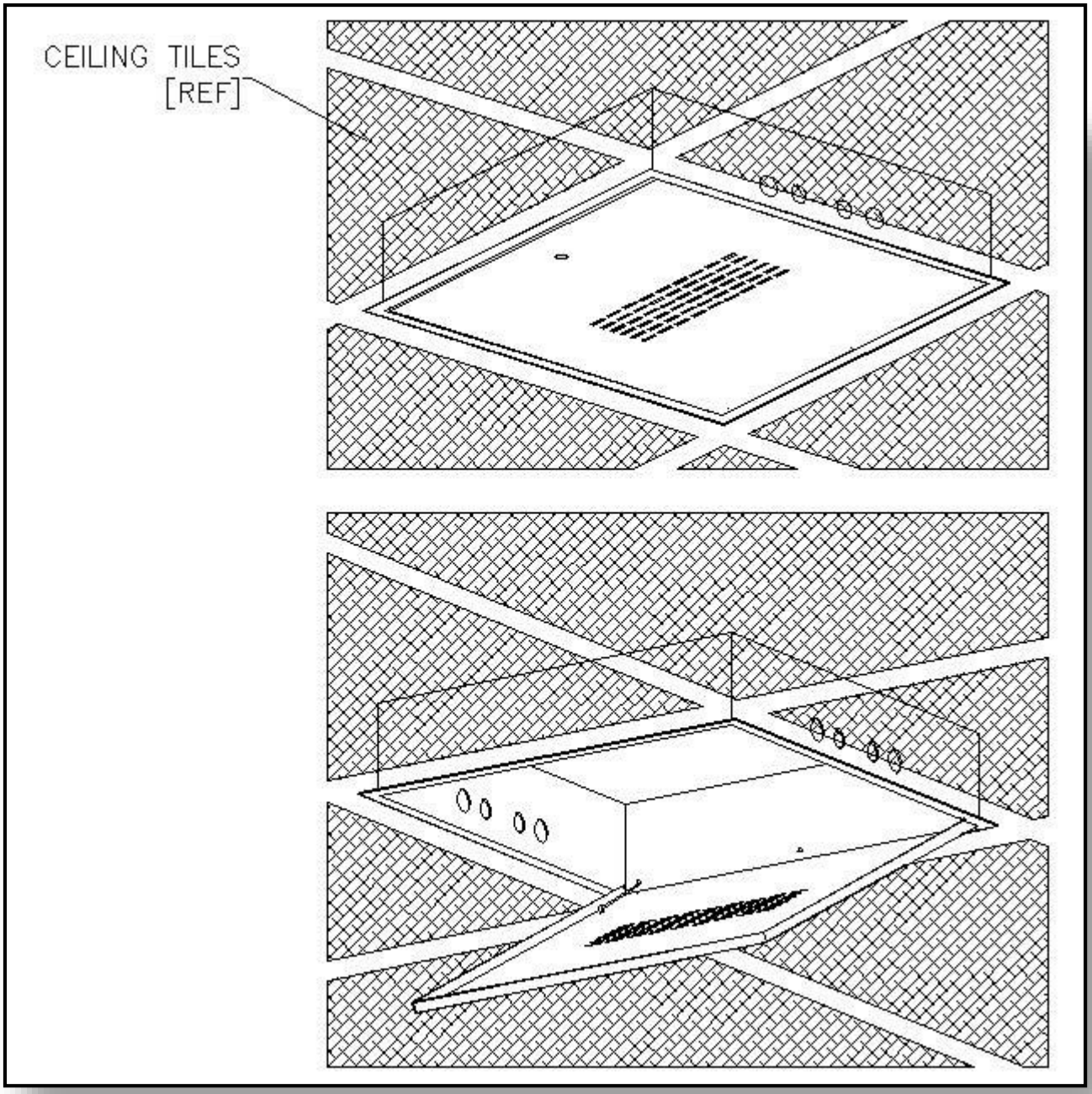

AT&T has selected **CENTRAL STEEL FABRICATORS** as the provider for this Drop Ceiling Enclosure.

The AT&T product item is the following: **CEQ.ANT.14141**

Manufacture model number: **DCE2405WHK**

Specifications subject to change. Please contact CSF Customer Service for more information.

© copyright 2004 Central Steel Fabricators, Inc.
http://www.centralsteelfab.com ◆ 2100 Parkes Drive, Broadview, IL 60155
Phone: 708-652-2037 Fax: 708-652-7010

Contents

- Pan – Pole Standoff Series [PANPP2SS12K]
- Pan – Pole Standoff Series [PANPP1SS12K]
- DIA Series - Drop Anchor
- ES1800 Series Expansion Shield – Machine Bolt
- ES1900 Series Expansion Shield – Lag Screw
- BBX Bracing Bracket
- CHB1 Ceiling Hanger Bracket
- CHB11 Ceiling Hanger Bracket Kit
- HB Series Stringer Hanger Bracket
- SHB Series Slotted Hanger Bracket
- CC – Corner Clamp
- SC – Straight Clamp
- WC – Wall Clip
- CB170 Series Connector Bolt
- FC300 Series Framing Clips
- FC316 Framing Clip
- FC320 Series Slotted Cross-Over Framing Clip
- FC320 Series Cross – Over Framing Clip
- FC414 Framing Clip
- FC511 Framing Clip
- FC516 Framing Clip
- FC355 Framing Clip
- HN141 – HN148 Series [Hex Nut]
- HDC / HDP Series Hold Down Plate
- HPX3000 Series Hold Down Plate
- JB240 Series [J-Bolts]
- SJB Series [J-Bolts]
- CJB Series [Clip J- Bolts]
- FH Series [Flat Head Machine Screws]
- RH Series [Round Head Machine Screws]
- PAN Head Machine Screw
- HEX HEAD Selection
- HH0600 – HH0800 Series – Hex Head Cap Screw
- HH1000 – HH1100 Series – Hex Head Cap Screw
- HH1200 Series – Hex Head Cap Screw
- LS1300 Series 3/8" Lag Screw
- SP3700 Series [Standard 1" Pipes]
- THP Series [Two Hole Plates]
- TBA7600 Series [Toggle Bolt Assembly]
- US120 Series Unistrut
- UST120 Unistrut
- UST120H Unistrut
- USN Series Unistrut Spring Nut
- Unistrut Vinyl Cap
- UB Series U-Bolt
- VB Series V-Bolt
- Wall Angles –WA05 & WA06
- Wall Angles
- LWI150 Series Internal Tooth Lock Washer
- LWE150 Series External Tooth Lock Washer
- LW150 Series Lock Washer
- SW Series Square Washer
- FW Series Flat Washer
- Cable Brackets
- CAB0608ZY Cable Bracket
- ECXXX End Cap For Threaded Rod
- FSXXXX Framing Support Angle
- Attach Aux. Channel And Cable Rack To Top Angle With Plate
- JBA42XX Attach Cable Rack To Wall Angle
- Attach Cable Rack To Top Angle
- Attach Cable Rack Stringer To Wall Angle
- Attach Vertical Cable Rack To Horizontal Cable Rack
- MCR08XX Mounting Cable Rack 2" Above Floor
- MCR09XX Mounting Cable Rack 4" Above Floor
- MCR10XX Mounting Cable Rack 6" Above Floor
- 3/8" – 16 Threaded Rod And Stud
- 1/2" – 13 Threaded Rod
- 5/8" – 11 Threaded Rod
- Threaded Rod Coupling
- WCXX Wall Clip For 1-1/2" And 2"
- Wall Mounting Bracket For Cable Rack
- WSB65XX Wall Support Bracket For Cable Racks
- WSB2XXSZYK12 Unistrut Wall Support Bracket For Cable Rack
- Air Dry Enamel

Specifications subject to change. Please contact CSF Customer Service for more information.

© copyright 2004 Central Steel Fabricators, Inc.
http://www.centralsteelfab.com ◆ 2100 Parkes Drive, Broadview, IL 60155
Phone: 708-652-2037 Fax: 708-652-7010

PAN-POLE STANDOFF SERIES [PANPP2SS12]

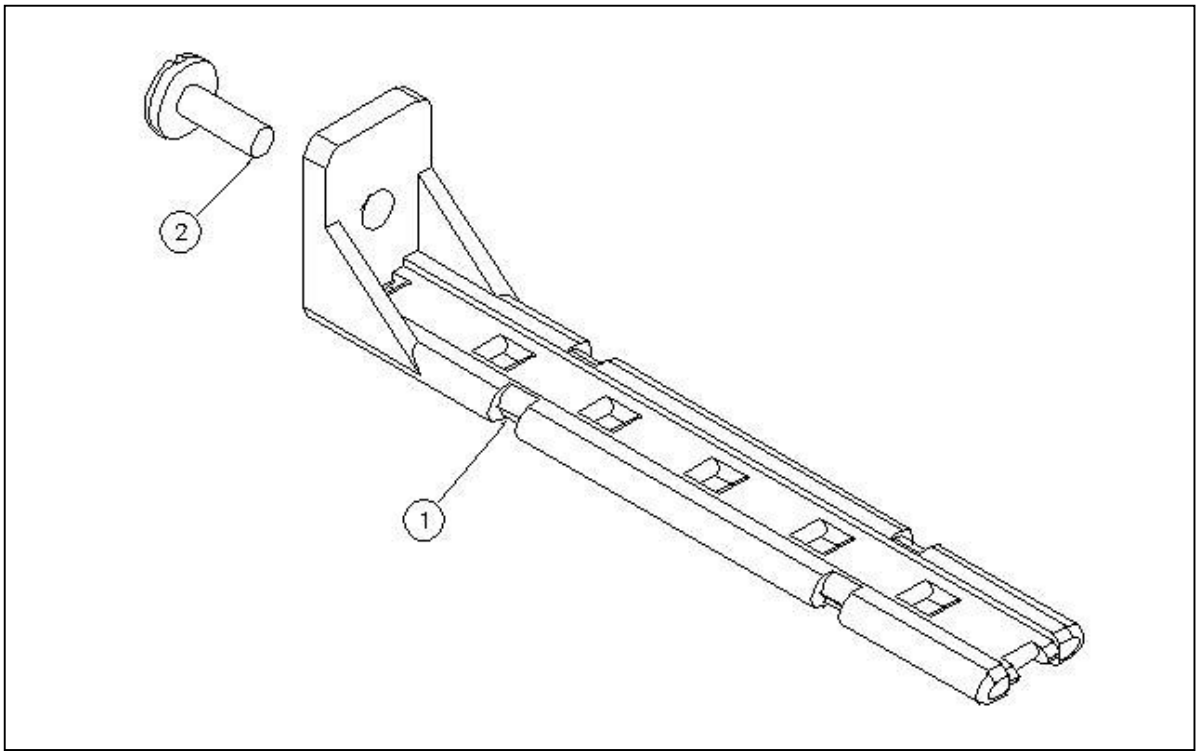

PANPP2SS12-10			
ITEM	CSF#	QTY	DESCRIPTION
1	PANPP2SS12	10	PAN-POLE STANDOFF 4.60” LG
2	PHO403FST	10	#12-24 X 1/2” LG.

MATERIAL:
NYLON 6.6

PANPP2SS12K			
ITEM	CSF#	QTY	DESCRIPTION
1	PANPP2SS12	1	PAN-POLE STANDOFF 4.60” LG
2	PHO403FST	1	#12-24 X 1/2” LG.

Specifications subject to change. Please contact CSF Customer Service for more information.
© copyright 2004 Central Steel Fabricators, Inc.
http://www.centralsteelfab.com ◆ 2100 Parkes Drive, Broadview, IL 60155
Phone: 708-652-2037 Fax: 708-652-7010

PAN-POLE STANDOFF SERIES [PANPP1SS12]

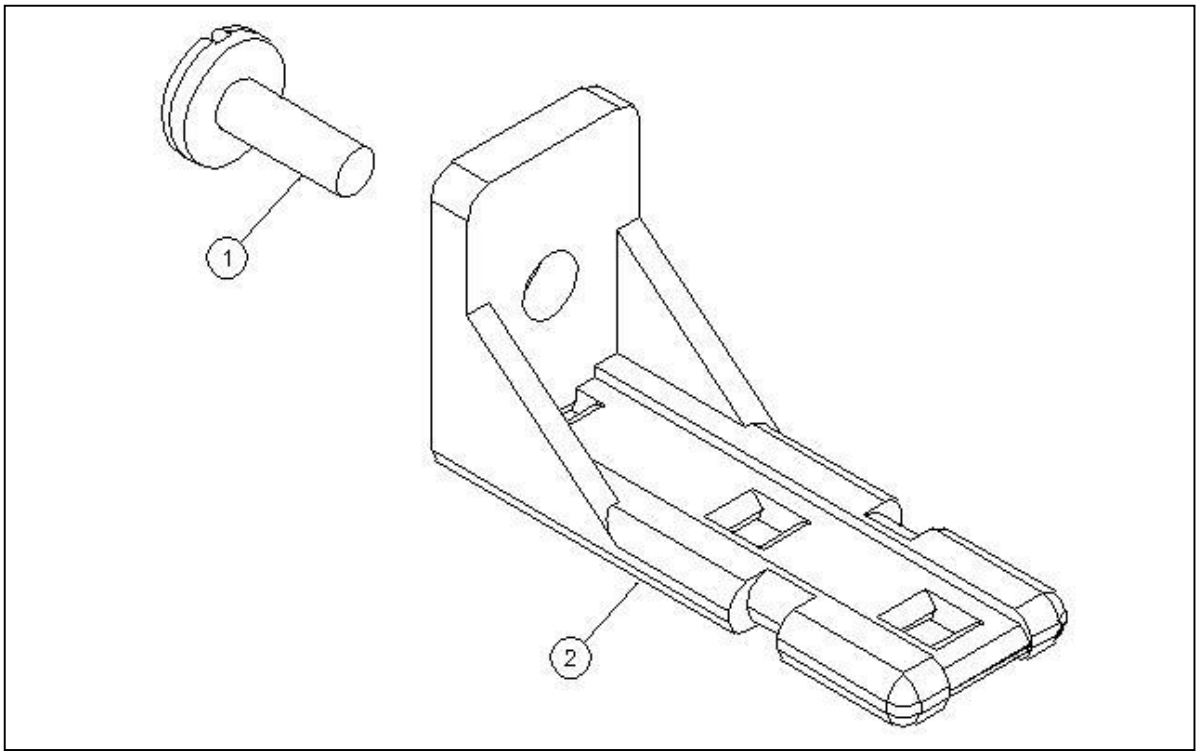

PANPP1SS12-10			
ITEM	CSF#	QTY	DESCRIPTION
1	PHO403FST	10	#12-24 X 1/2” LG.
2	PANPP1SS12	10	PAN-POLE STANDOFF 1.97” LG

MATERIAL:
NYLON 6.6

PANPP1SS12K			
ITEM	CSF#	QTY	DESCRIPTION
1	PHO403FST	1	#12-24 X 1/2” LG.
2	PANPP1SS12	1	PAN-POLE STANDOFF 1.97” LG

Specifications subject to change. Please contact CSF Customer Service for more information.

© copyright 2004 Central Steel Fabricators, Inc.
http://www.centralsteelfab.com ◆ 2100 Parkes Drive, Broadview, IL 60155
Phone: 708-652-2037 Fax: 708-652-7010

DIA Series DROP ANCHOR

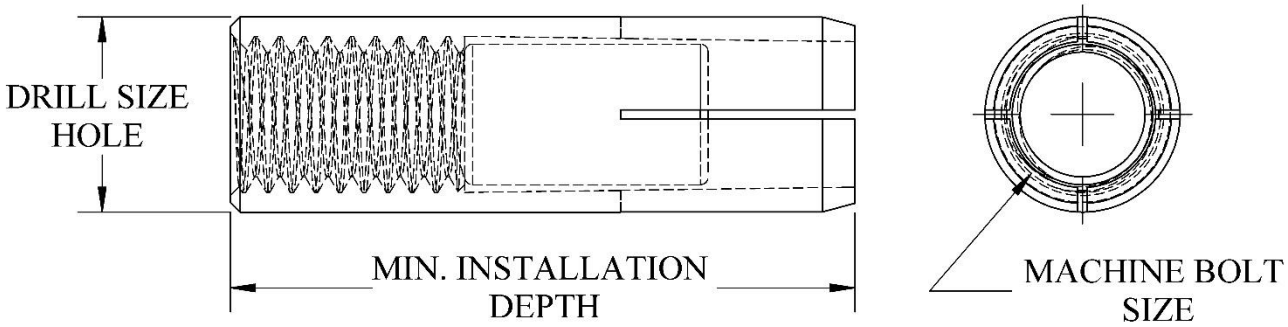

CSF#	DRILL SIZE HOLE	MIN. INSTALLATION DEPTH	MACHINE BOLT SIZE
DIA25	∅ .375″	1.00″	1/4"-20UNC
DIA37	∅ .50"	1.50″	3/8"-16UNC
DIA50	∅ .625″	2.00″	1/2"-13UNC

RVSD*1116

Specifications subject to change. Please contact CSF Customer Service for more information.

© copyright 2004 Central Steel Fabricators, Inc.
http://www.centralsteelfab.com ◆ 2100 Parkes Drive, Broadview, IL 60155
Phone: 708-652-2037 Fax: 708-652-7010

ES1800 Series EXPANSION SHIELD-MACHINE BOLT

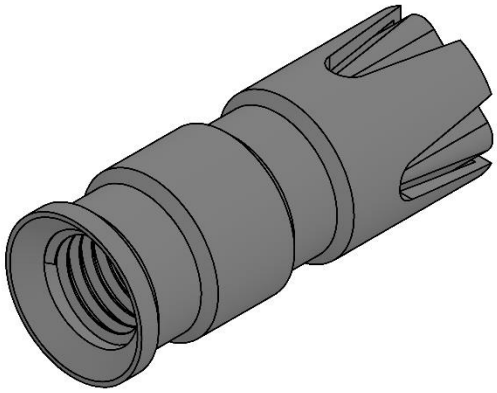

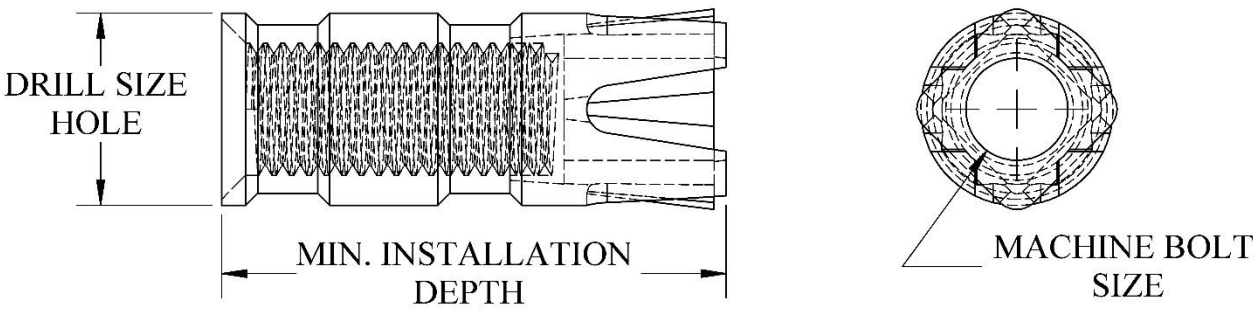

CSF#	DRILL SIZE HOLE	MIN. INSTALLATION DEPTH	MACHINE BOLT SIZE
ES1801	∅ .50″	1.31″	1/4-20UNC
ES1803	∅ .63"	1.50″	5/16-18UNC
ES1805	∅ .63″	1.50″	3/8-16UNC
ES1808	∅ .88″	2.00″	1/2-13UNC
ES1811	∅ 1.00″	2.63″	5/11-11UNC

RVSD*1116

Specifications subject to change. Please contact CSF Customer Service for more information.

© copyright 2004 Central Steel Fabricators, Inc.
http://www.centralsteelfab.com ◆ 2100 Parkes Drive, Broadview, IL 60155
Phone: 708-652-2037 Fax: 708-652-7010

ES1900 Series EXPANSION SHIELD LAG SCREW

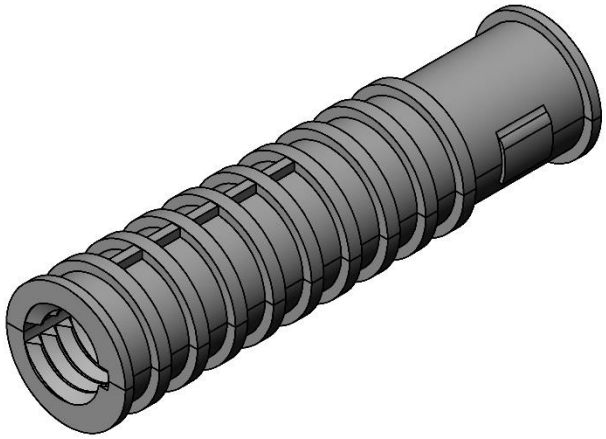

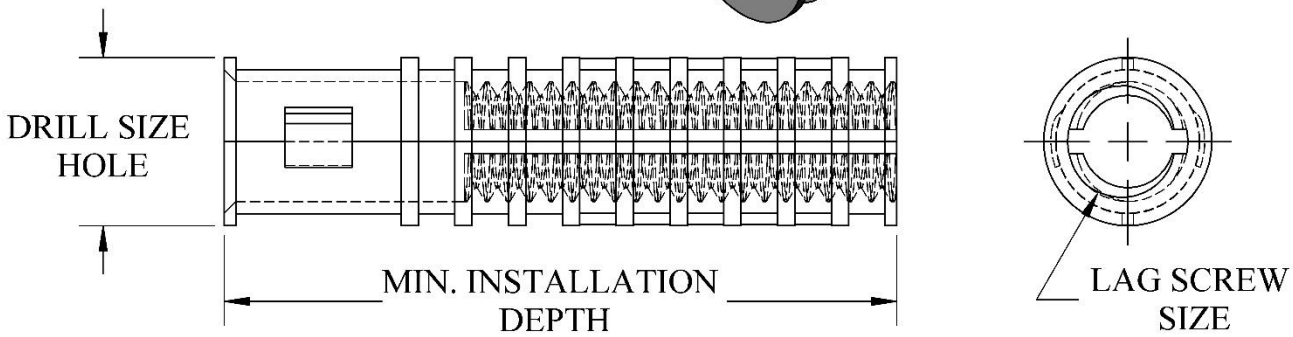

CSF#	DRILL SIZE HOLE	MIN. INSTALLATION DEPTH	LAG SCREW SIZE
ES1902	∅ .50″	1.00″	1/4″
ES1903	∅ .50"	1.75″	5/16″
ES1905	∅ .63″	2.50″	3/8″
ES1906	∅ .63″	1.75″	3/8″
ES1907	∅ .75″	3.00″	1/2″
ES1908	∅ .75″	2.00″	1/2″
ES1909	∅ .88″	3.50″	5/8″

Specifications subject to change. Please contact CSF Customer Service for more information.

© copyright 2004 Central Steel Fabricators, Inc.
http://www.centralsteelfab.com ◆ 2100 Parkes Drive, Broadview, IL 60155
Phone: 708-652-2037 Fax: 708-652-7010

Cable Rack Brackets

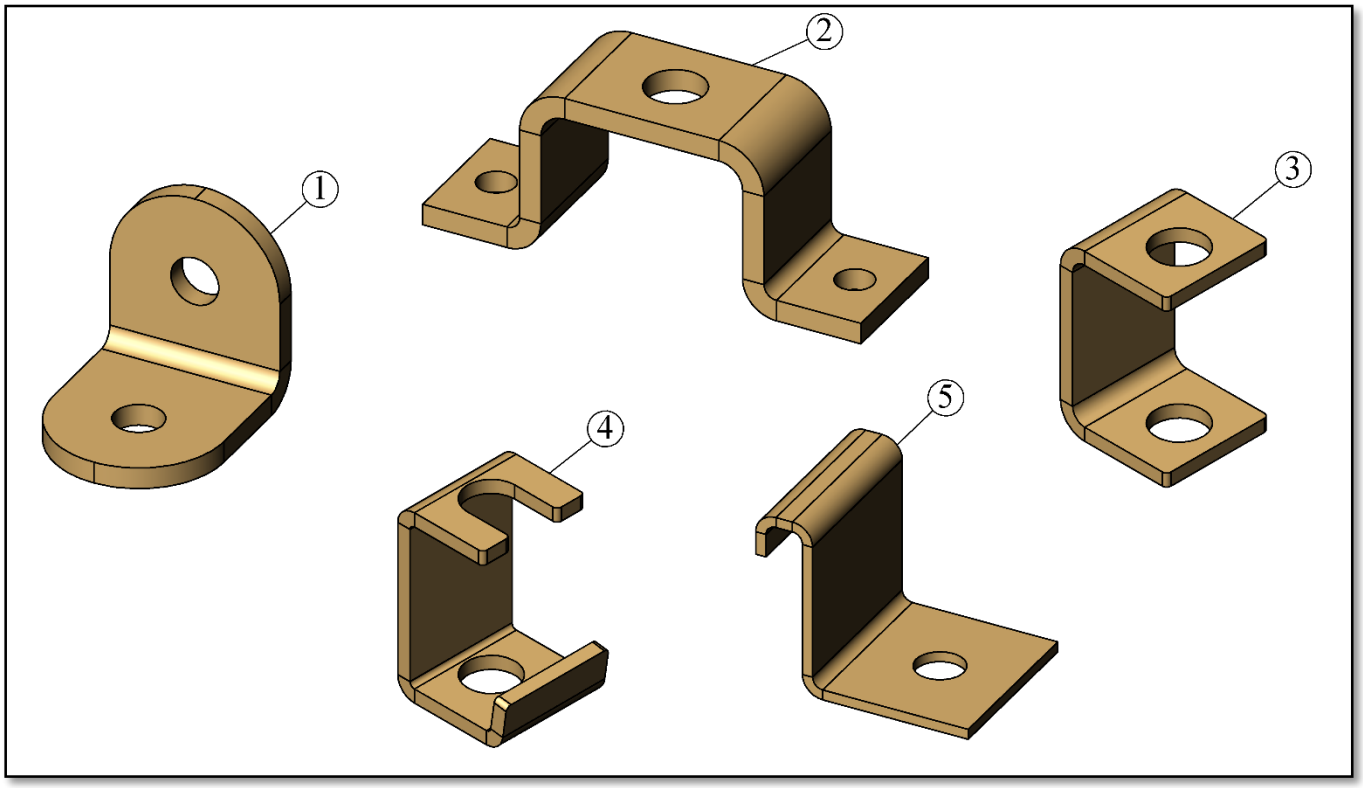

Item#	Description
1	Bracing Brackets
2	Ceiling Hanger Bracket
3	Stringer Hanger Bracket
4	Slotted Hanger Bracket
5	Wall Clip

Finish: Zinc and Yellow

RVSD*0418

Specifications subject to change. Please contact CSF Customer Service for more information.

© copyright 2004 Central Steel Fabricators, Inc.
http://www.centralsteelfab.com ◆ 2100 Parkes Drive, Broadview, IL 60155
Phone: 708-652-2037 Fax: 708-652-7010

BBX BRACING BRACKET

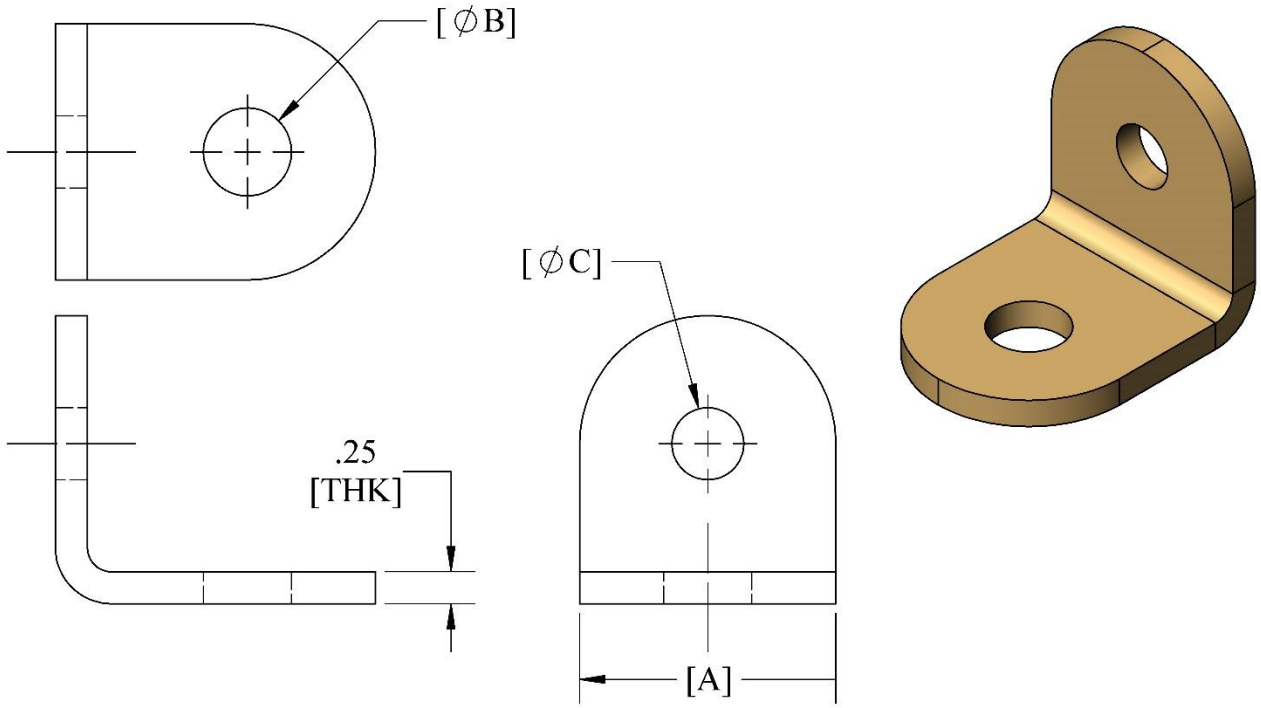

CSF#	DIM: A	DIM: B	DIM: C
BB1	2.00″	.56″	.69″
BB2	2.00"	.69″	.69″
BB3	2.00″	.56″	.56″

FINISH: ZINC AND YELLOW

RVSD*1116

Specifications subject to change. Please contact CSF Customer Service for more information.

© copyright 2004 Central Steel Fabricators, Inc.
http://www.centralsteelfab.com ◆ 2100 Parkes Drive, Broadview, IL 60155
Phone: 708-652-2037 Fax: 708-652-7010

CHB1 CEILING HANGER BRACKET

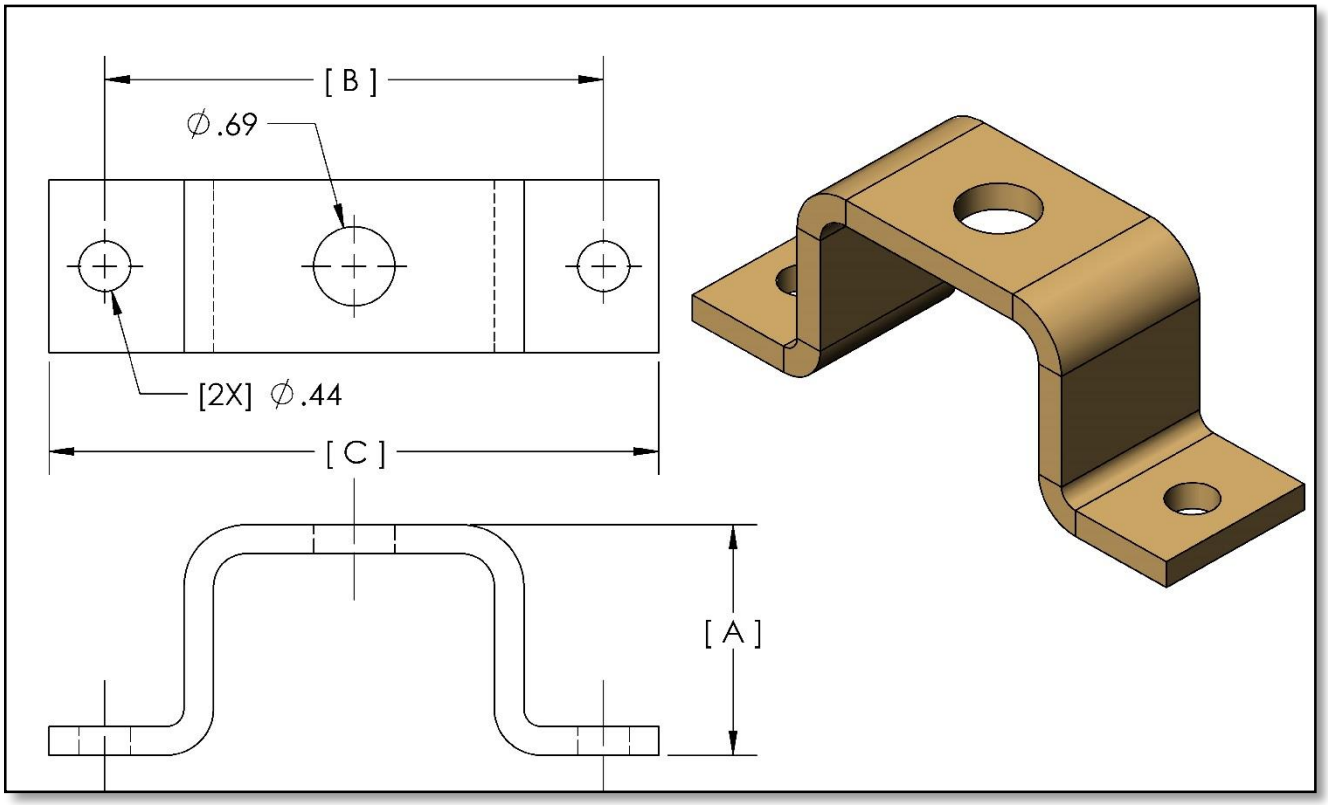

CSF#	DIM: A	DIM: B	DIM: C
CHB1	2.00″	4.22″	5.16″

FINISH: ZINC AND YELLOW

RVSD*1116

Specifications subject to change. Please contact CSF Customer Service for more information.

© copyright 2004 Central Steel Fabricators, Inc.
http://www.centralsteelfab.com ◆ 2100 Parkes Drive, Broadview, IL 60155
Phone: 708-652-2037 Fax: 708-652-7010

CHB11 CEILING HANGER BRACKET KIT

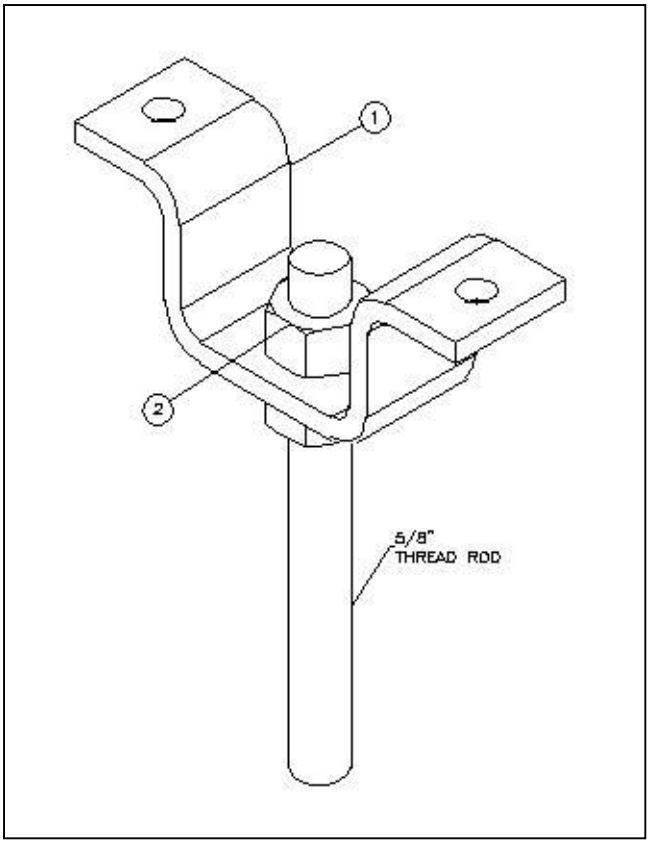

ITEM#	CSF#	QTY	DESCRIPTION
1	CHB1	1	CEILING HANGERBRACKET
2	HN148	2	5/8”-11 HEX NUT

FINISH: ZINC AND YELLOW
HARDWARE TO ATTACH THE BRACKET TO THE CEILING AND THE THREADED ROD ARE NOT INCLUDED

Specifications subject to change. Please contact CSF Customer Service for more information.
© copyright 2004 Central Steel Fabricators, Inc.
http://www.centralsteelfab.com ◆ 2100 Parkes Drive, Broadview, IL 60155
Phone: 708-652-2037 Fax: 708-652-7010

HB Series STRINGER HANGER BRACKET

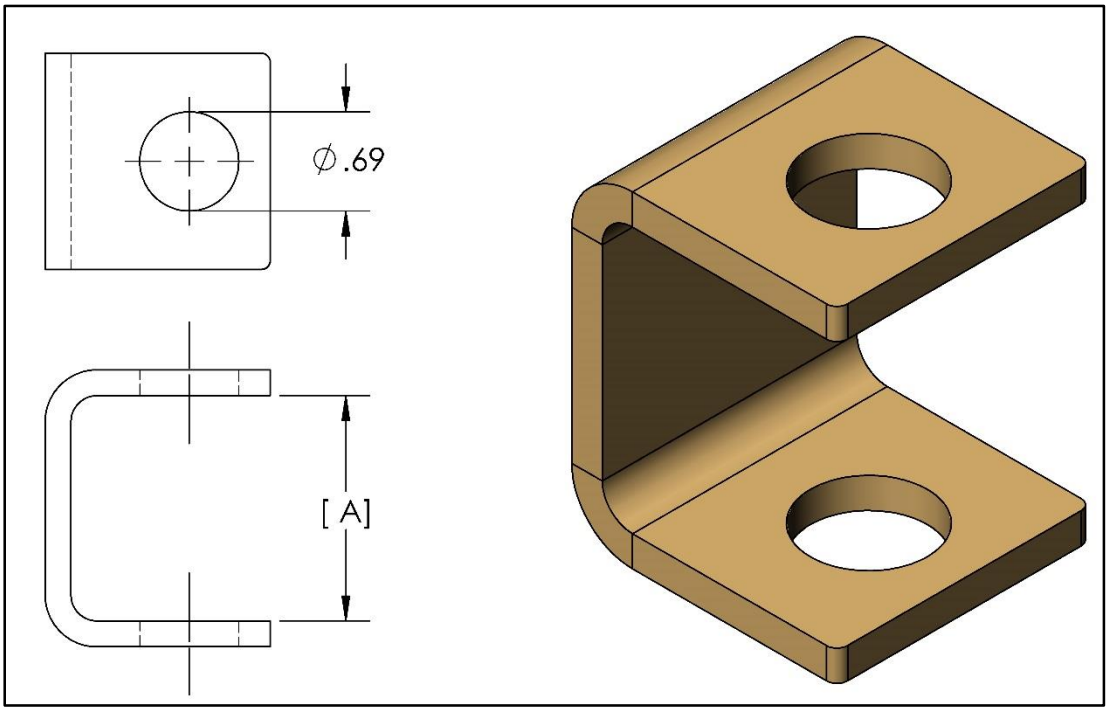

CSF#	DESCRIPTION	DIM: A
HB1	CABLE RACK SIDE BAR HANGER BRACKET [1.50" CABLE RACK]	1.56"
HB2	CABLE RACK SIDE BAR HANGER BRACKET [2.00" CABLE RACK]	2.06"

FINISH: ZINC AND YELLOW

RVSD*1116

Specifications subject to change. Please contact CSF Customer Service for more information.

© copyright 2004 Central Steel Fabricators, Inc.
http://www.centralsteelfab.com ◆ 2100 Parkes Drive, Broadview, IL 60155
Phone: 708-652-2037 Fax: 708-652-7010

SHB Series SLOTTED HANGER BRACKET

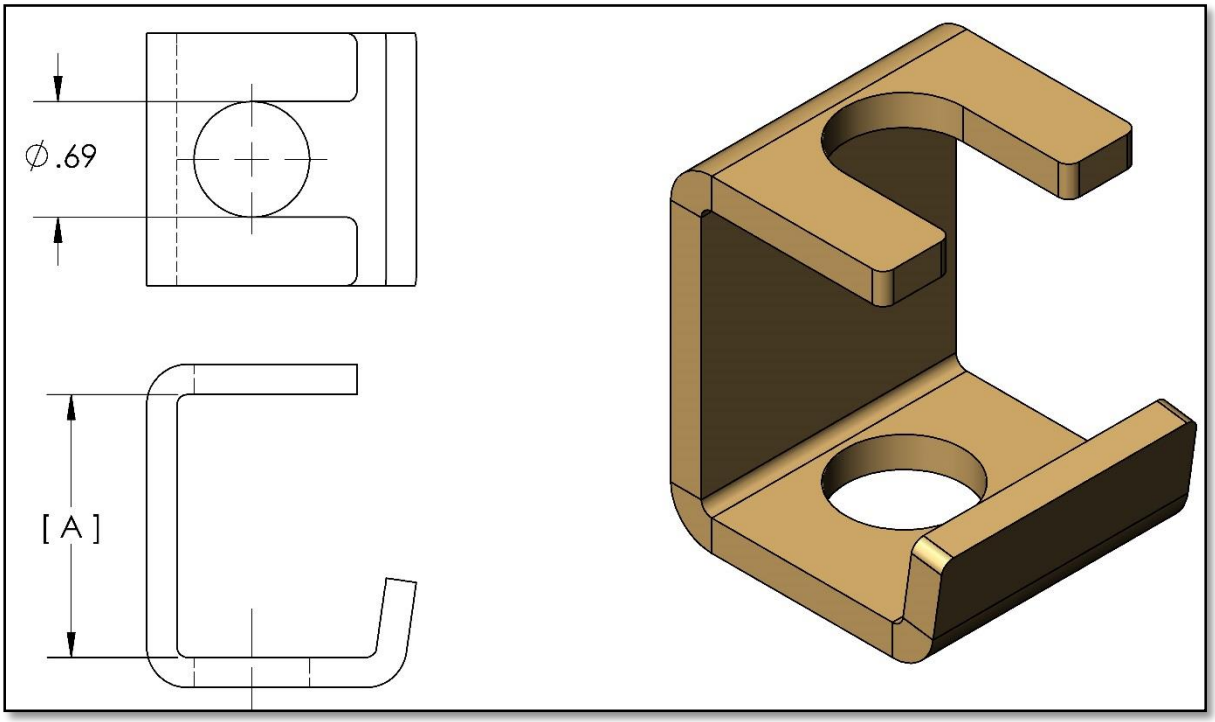

CSF#	DESCRIPTION	DIM: A
SHB1	SLOTTED HANGER BRACKET [1.50" CABLE RACK]	1.56"
SHB2	SLOTTED HANGER BRACKET [2.00" CABLE RACK]	2.06"

FINISH: ZINC AND YELLOW

RVSD*1116

Specifications subject to change. Please contact CSF Customer Service for more information.

© copyright 2004 Central Steel Fabricators, Inc.
http://www.centralsteelfab.com ◆ 2100 Parkes Drive, Broadview, IL 60155
Phone: 708-652-2037 Fax: 708-652-7010

CC – Corner Clamp Bracket

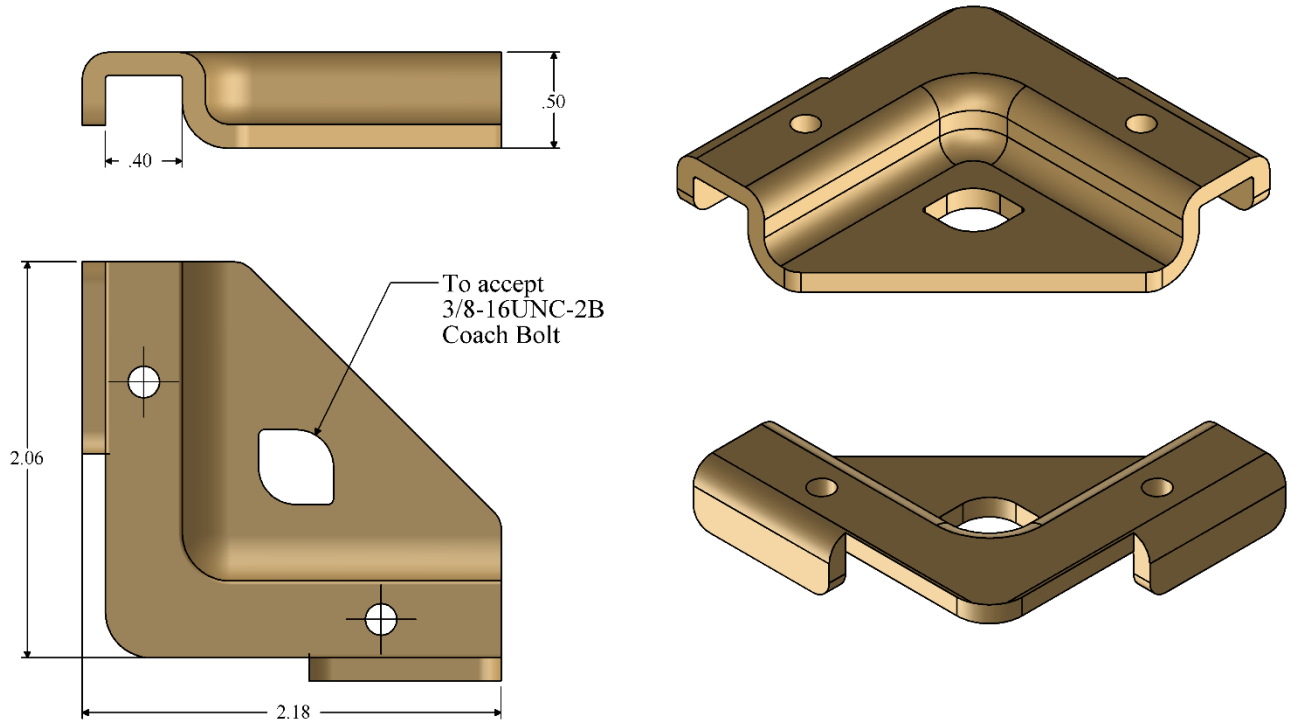

Item#	Description
CC	Corner Clamp Bracket

Finish: Zinc and Yellow

RVSD*0217

Specifications subject to change. Please contact CSF Customer Service for more information.

© copyright 2004 Central Steel Fabricators, Inc.
http://www.centralsteelfab.com ◆ 2100 Parkes Drive, Broadview, IL 60155
Phone: 708-652-2037 Fax: 708-652-7010

CCCN – Corner Clamp Bracket Continuity

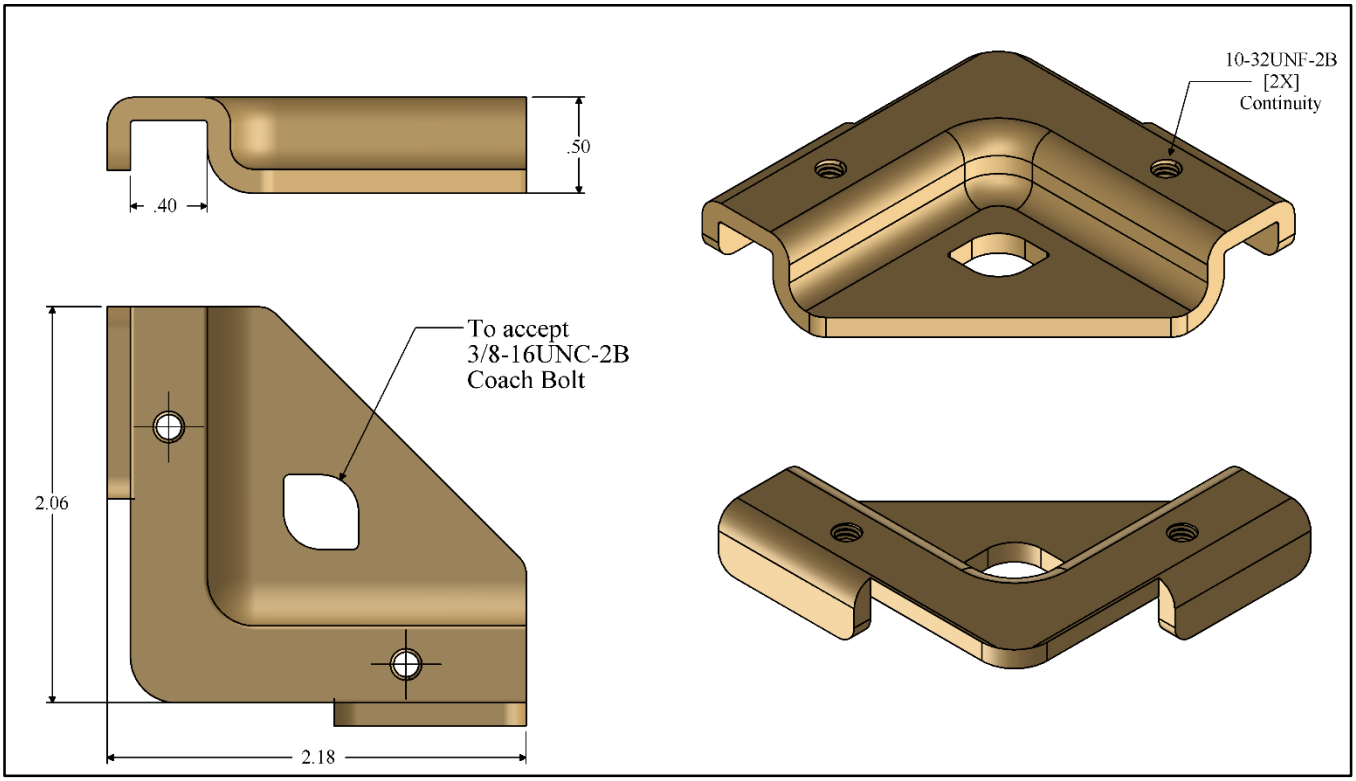

Item#	Description
CCCN	Corner Clamp Bracket Continuity

Finish: Zinc and Yellow

RVSD*0217

Specifications subject to change. Please contact CSF Customer Service for more information.

© copyright 2004 Central Steel Fabricators, Inc.
http://www.centralsteelfab.com ◆ 2100 Parkes Drive, Broadview, IL 60155
Phone: 708-652-2037 Fax: 708-652-7010

SC – Straight Clamp Bracket

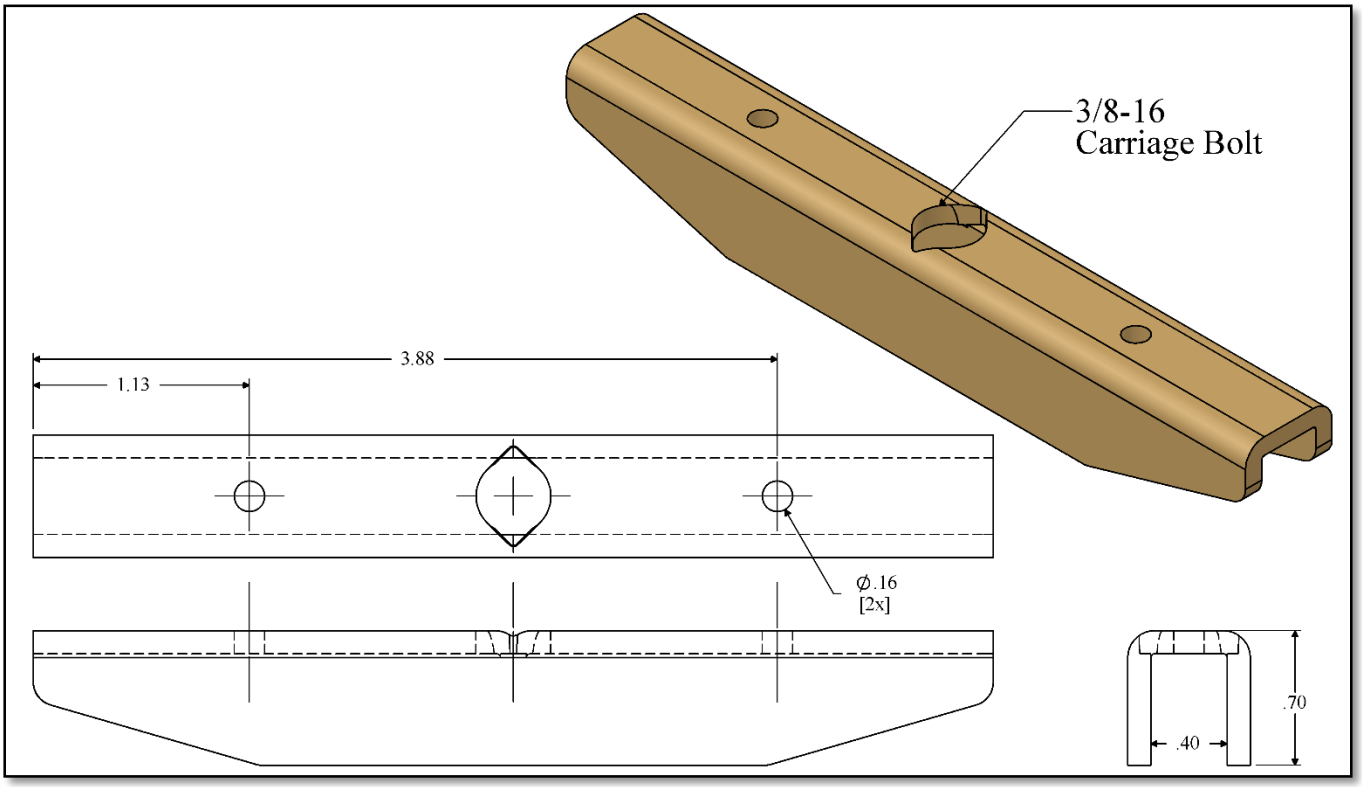

CSF#	Description
SC	Straight Clamp Bracket

Finish: Zinc and Yellow

RVSD*0217

Specifications subject to change. Please contact CSF Customer Service for more information.

© copyright 2004 Central Steel Fabricators, Inc.
http://www.centralsteelfab.com ◆ 2100 Parkes Drive, Broadview, IL 60155
Phone: 708-652-2037 Fax: 708-652-7010

SCCN – Straight Clamp Bracket [Continuity]

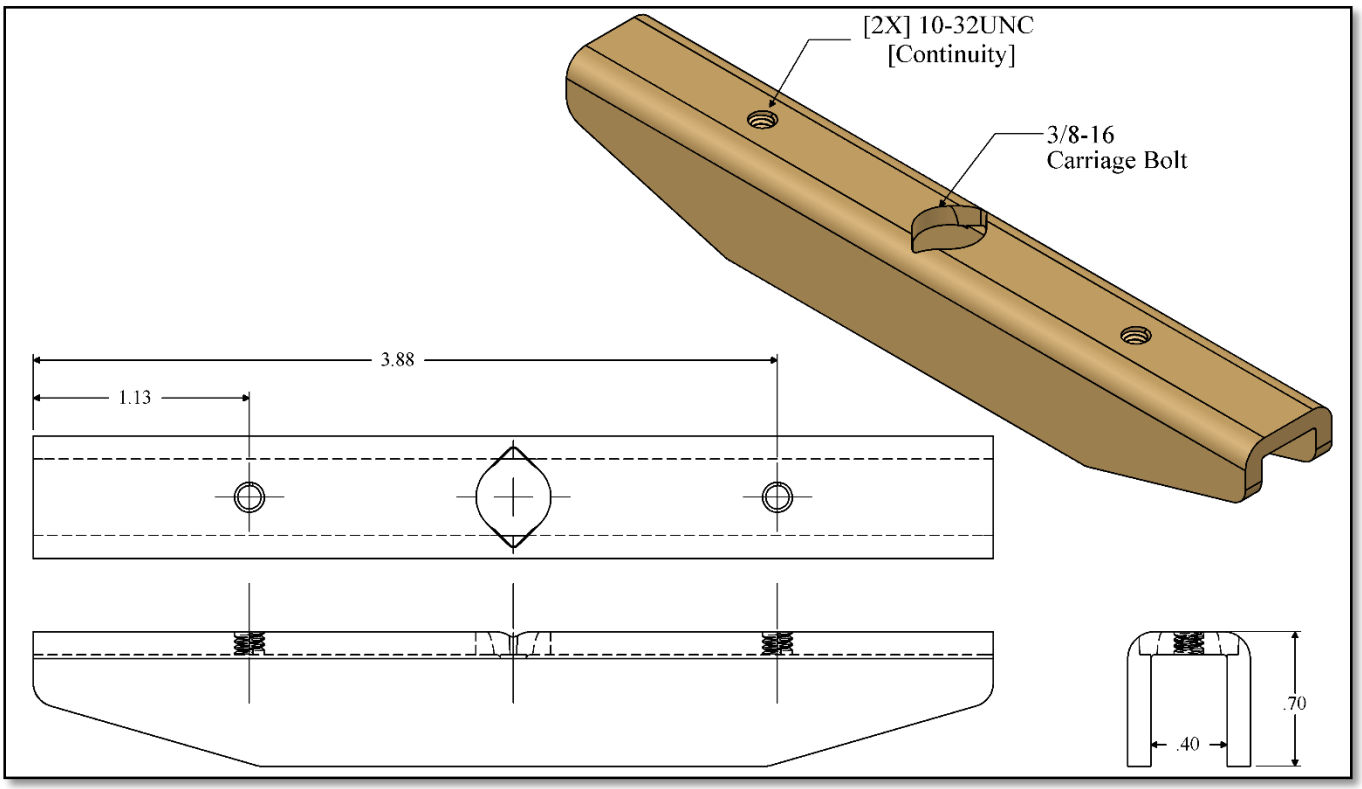

CSF#	Description
SCCN	Straight Clamp Bracket [Continuity]

Finish: Zinc and Yellow

RVSD*0217

Specifications subject to change. Please contact CSF Customer Service for more information.

© copyright 2004 Central Steel Fabricators, Inc.
http://www.centralsteelfab.com ◆ 2100 Parkes Drive, Broadview, IL 60155
Phone: 708-652-2037 Fax: 708-652-7010

WCX – WALL CLIP

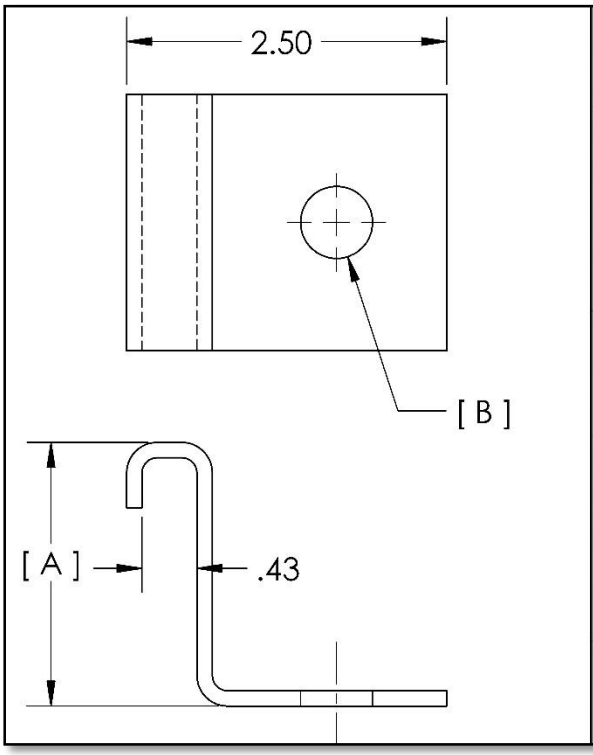

CSF#	DIM: A	DIM ∅ : B	DESCRIPTION
WC1	1.50″	∅ .44″	WALL CLIP
WC2	2.00″	∅ .44″	WALL CLIP
WC4	2.00″	∅ .56″	WALL CLIP

FINISH FOR ALL: ZINC AND YELLOW

RVSD*1116

Specifications subject to change. Please contact CSF Customer Service for more information.

© copyright 2004 Central Steel Fabricators, Inc.
http://www.centralsteelfab.com ◆ 2100 Parkes Drive, Broadview, IL 60155
Phone: 708-652-2037 Fax: 708-652-7010

CB17x Series Connector Bolt

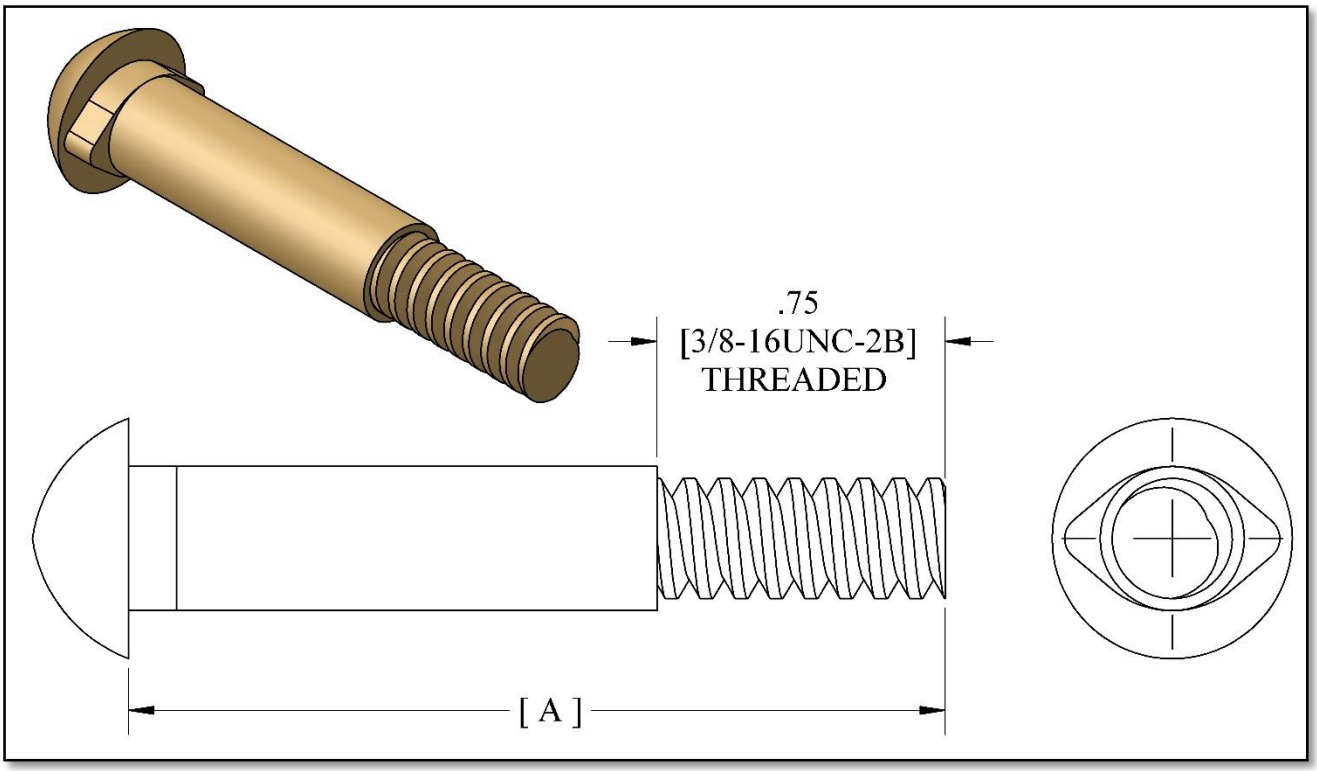

CSF#	Dim: A	Description
CB170	1.88”	3/8-16UNC-2B X 1.88” LG. - Connector Bolt – ZY
CB171	1.38”	3/8-16UNC-2B X 1.38” LG. – Connector Bolt – ZY
CB172	2.12”	3/8-16UNC-2B X 2.12” LG. - Connector Bolt – ZY
CB173	2.69”	3/8-16UNC-2B X 2.69” LG. – Connector Bolt – ZY
CB174	2.38”	3/8-16UNC-2B X 2.38” LG. - Connector Bolt – ZY
CB175	3.00”	3/8-16UNC-2B X 3.00” LG. - Connector Bolt – ZY

Finish Code: Zinc and Yellow

RVSD*1117

Specifications subject to change. Please contact CSF Customer Service for more information.
© copyright 2004 Central Steel Fabricators, Inc.
http://www.centralsteelfab.com ◆ 2100 Parkes Drive, Broadview, IL 60155
Phone: 708-652-2037 Fax: 708-652-7010

FC300 Series FRAMING CLIP

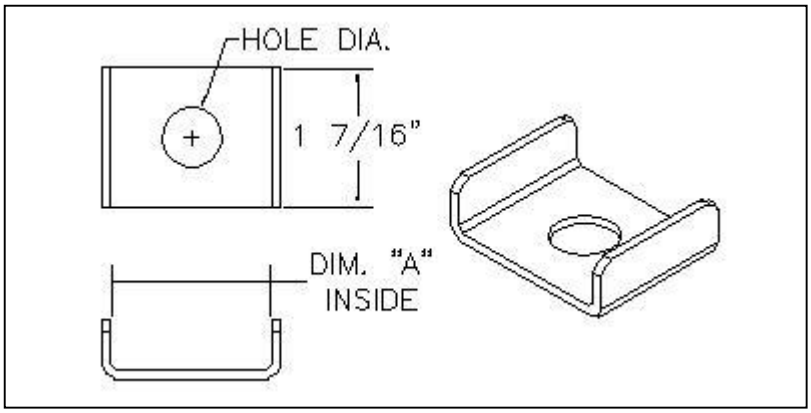

ITEM	DIM. A	HOLE DIA.	BOLT SIZE
FC309	1 5/8"	21/32"	5/6"
FC310	1 5/8"	17/32"	1/2"
FC311	1 1/2"	13/32"	3/8"
FC312	1 1/2"	17/32"	1/2"
FC313	1 1/2"	21/32"	5/8"
FC314	1 7/8"	13/32"	3/8"
FC317	2 11/16"	17/32"	1/2"
FC318	2 11/16"	21/32"	5/8"
FC319	2 5/16"	17/32"	1/2"
FC320	2 5/16"	21/32"	5/8"

FINISH: ZINC AND YELLOW

Specifications subject to change. Please contact CSF Customer Service for more information.
© copyright 2004 Central Steel Fabricators, Inc.
http://www.centralsteelfab.com ◆ 2100 Parkes Drive, Broadview, IL 60155
Phone: 708-652-2037 Fax: 708-652-7010

FC315 - FRAMING CLIP

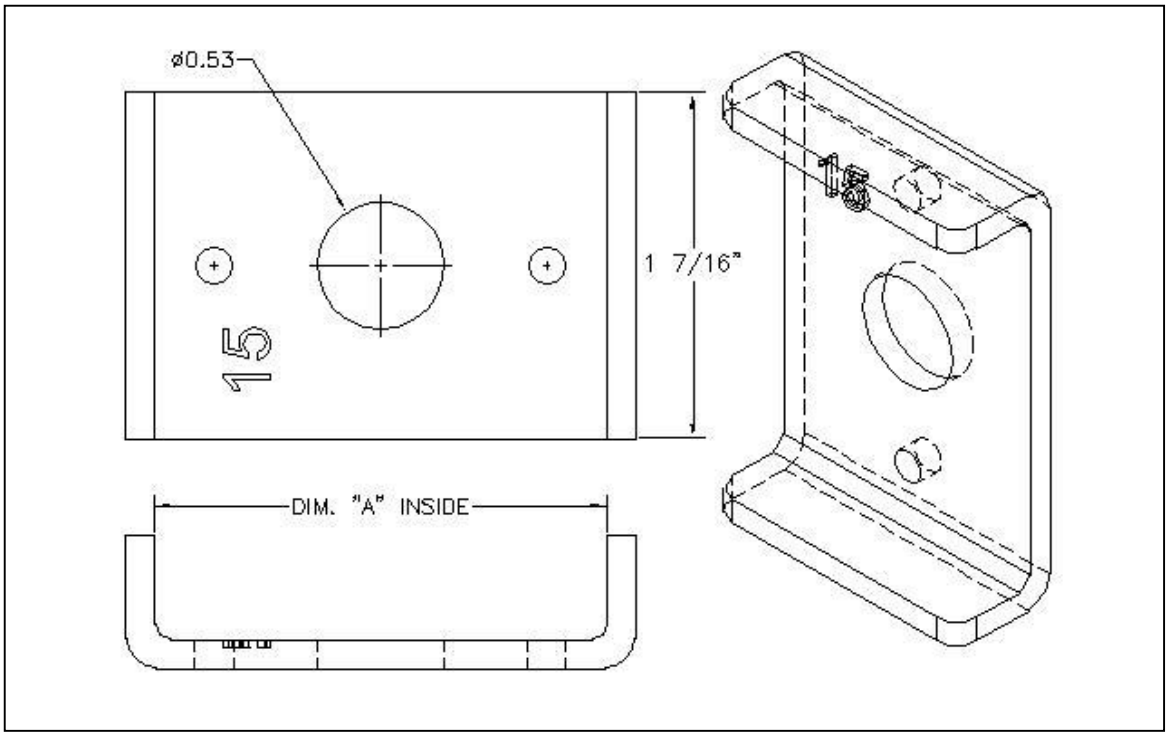

ITEM	DIM. A	HOLE DIA.	BOLT SIZE
FC315	1 7/8"	17/32"	1/2"

NOTES:
- [2X] HOLES USE FOR CONTINUITY
- FINISH: ZINC AND YELLOW

Specifications subject to change. Please contact CSF Customer Service for more information.
© copyright 2004 Central Steel Fabricators, Inc.
http://www.centralsteelfab.com ◆ 2100 Parkes Drive, Broadview, IL 60155
Phone: 708-652-2037 Fax: 708-652-7010

FC316 – Auxiliary Framing Channel Framing Clip

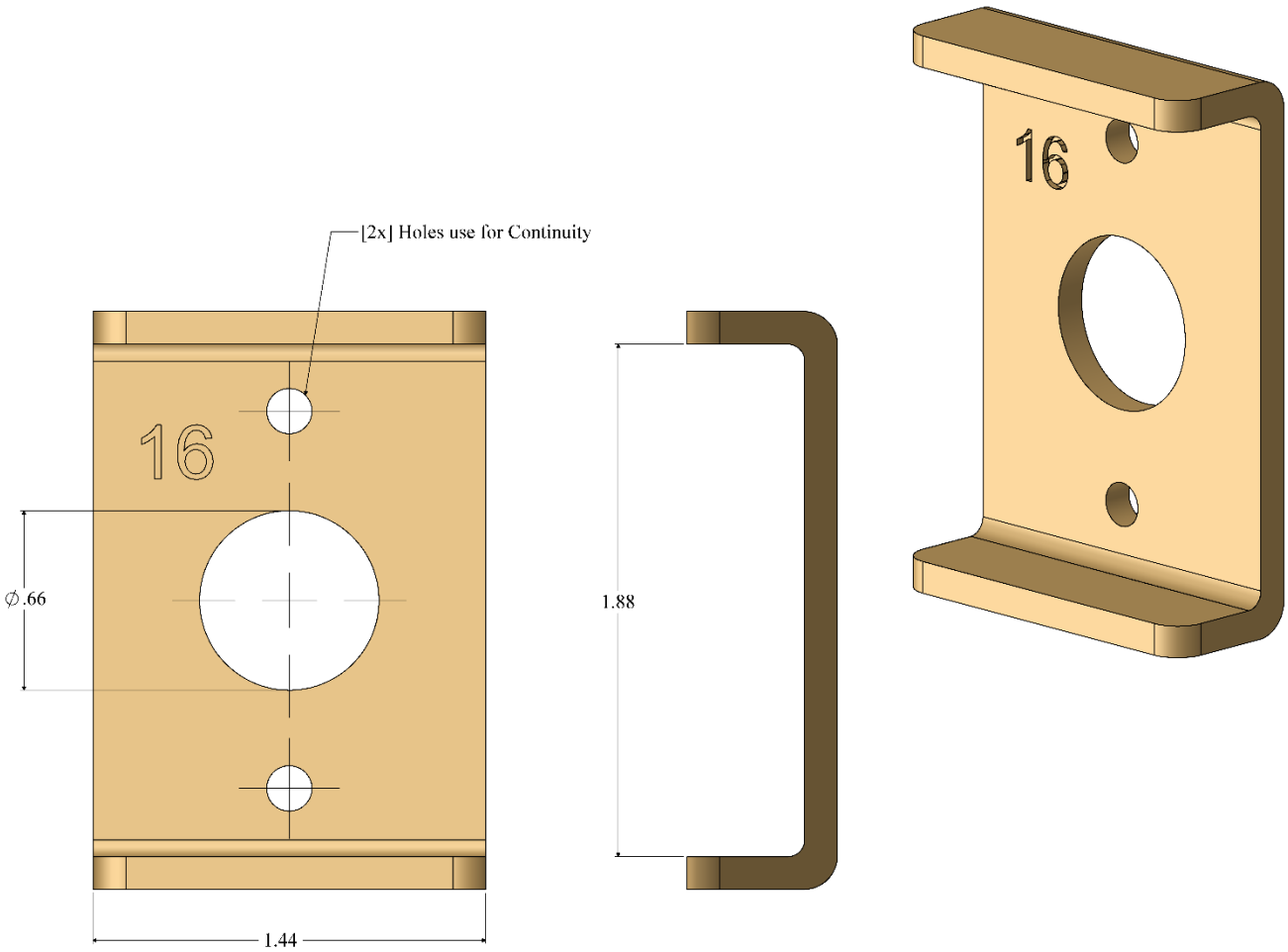

FC316 – Auxiliary Framing Channel Framing Clip	
CSF P/N#	Description
FC316	Auxiliary Framing Channel Framing Clip

Notes:

- Finish Code: Zinc And Yellow

RVSD*1017

Specifications subject to change. Please contact CSF Customer Service for more information.

© copyright 2004 Central Steel Fabricators, Inc.
http://www.centralsteelfab.com ◆ 2100 Parkes Drive, Broadview, IL 60155
Phone: 708-652-2037 Fax: 708-652-7010

FC320 Series SLOTTED SCROSS-OVER FRAMING CLIP

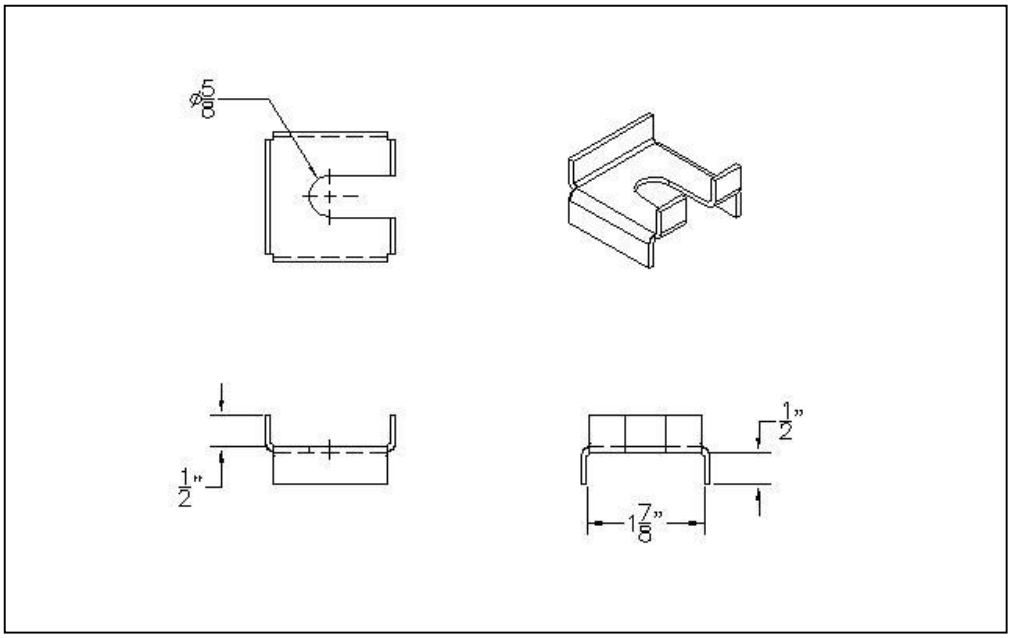

ITEM	DIM. A	HOLE DIA.	BOLT SIZE
FC326S	1-7/8″	11/16"	5/8"

FINISH: ZINC AND YELLOW

Specifications subject to change. Please contact CSF Customer Service for more information.

© copyright 2004 Central Steel Fabricators, Inc.
http://www.centralsteelfab.com ◆ 2100 Parkes Drive, Broadview, IL 60155
Phone: 708-652-2037 Fax: 708-652-7010

FC32x Series – Cross Over Framing Clip

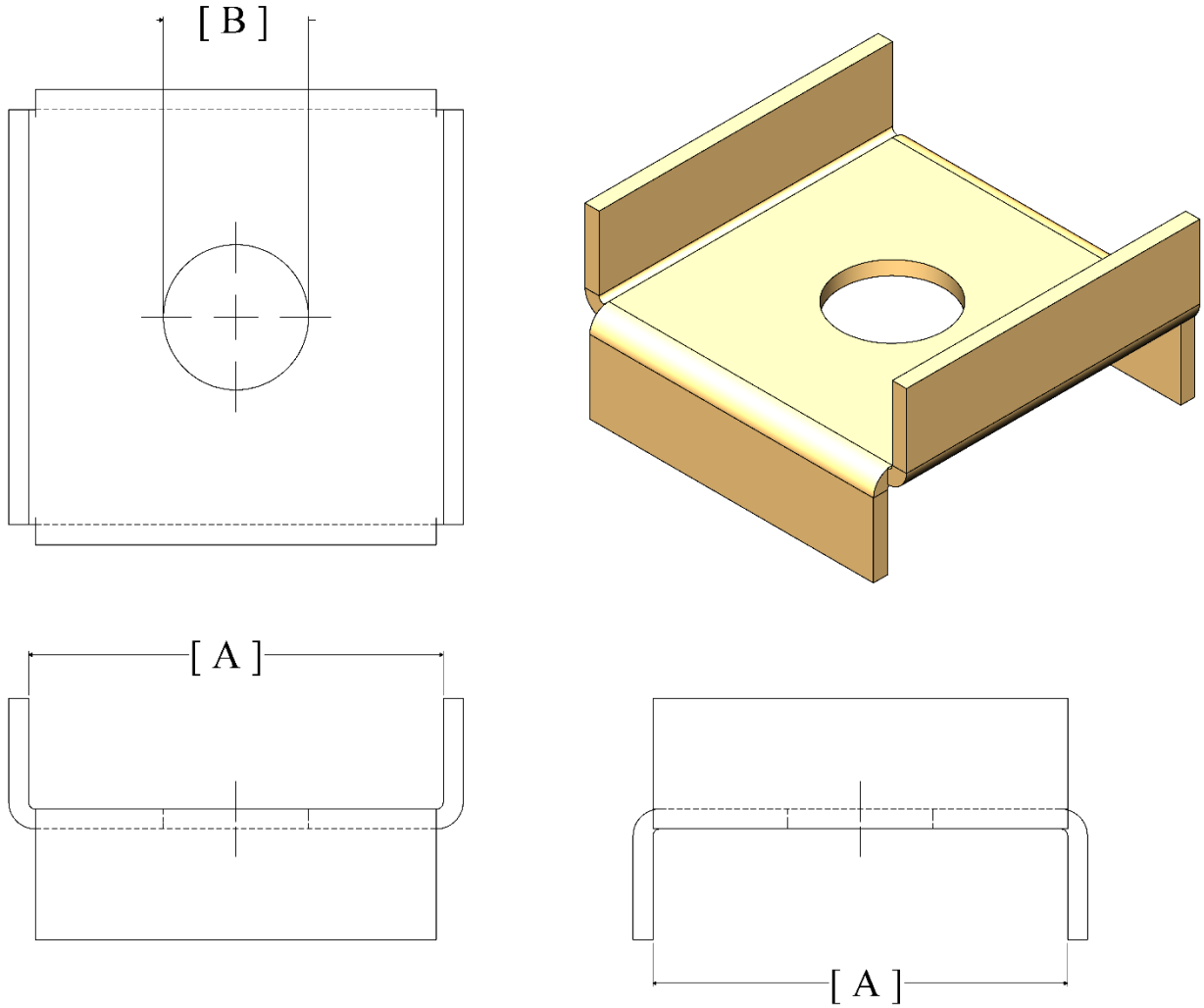

FC32x – Cross Over Framing Clip				
CSF P/N#	Dim: [A]	Dim: [B]	Description	Bolt Size
FC323	1.50”	∅ .66	Auxiliary Framing Bar Cross Over Clip	5/8-11
FC326	1.88”	∅ .66	Auxiliary Framing Channel Cross Over Clip	5/8-11

Finish Code: Zinc and Yellow

RVSD*1217

Specifications subject to change. Please contact CSF Customer Service for more information.

© copyright 2004 Central Steel Fabricators, Inc.
http://www.centralsteelfab.com ◆ 2100 Parkes Drive, Broadview, IL 60155
Phone: 708-652-2037 Fax: 708-652-7010

FC414 FRAMING CLIP

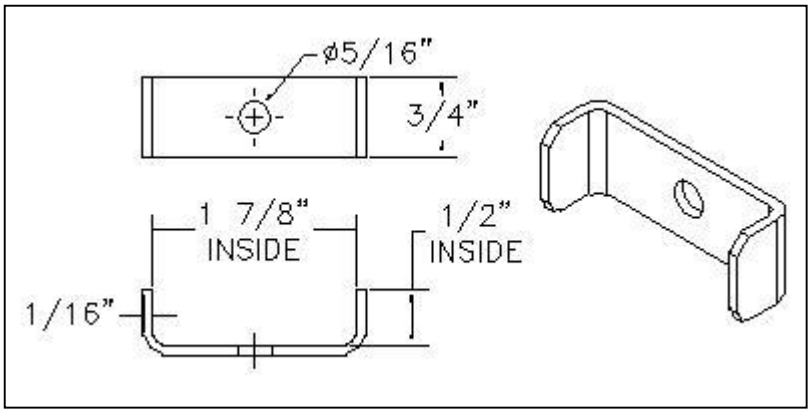

Specifications subject to change. Please contact CSF Customer Service for more information.
© copyright 2004 Central Steel Fabricators, Inc.
http://www.centralsteelfab.com ◆ 2100 Parkes Drive, Broadview, IL 60155
Phone: 708-652-2037 Fax: 708-652-7010

FC511 FRAMING CLIP

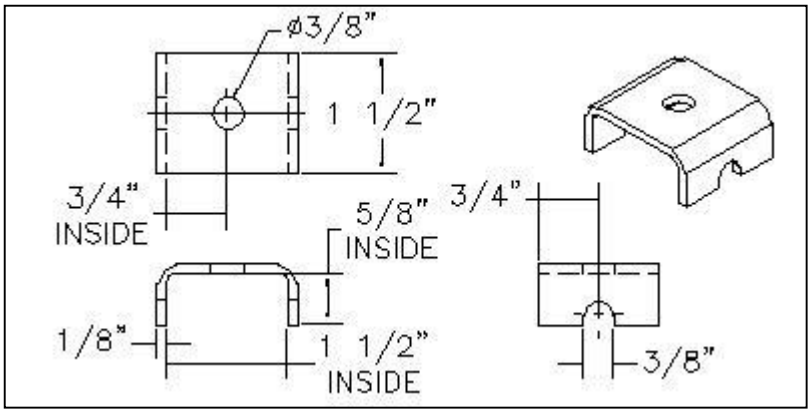

Specifications subject to change. Please contact CSF Customer Service for more information.
© copyright 2004 Central Steel Fabricators, Inc.
http://www.centralsteelfab.com ◆ 2100 Parkes Drive, Broadview, IL 60155
Phone: 708-652-2037 Fax: 708-652-7010

FC516 FRAMING CLIP

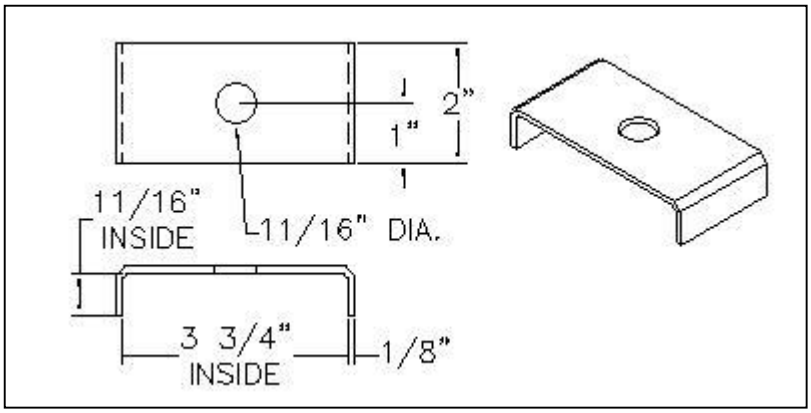

Specifications subject to change. Please contact CSF Customer Service for more information.
© copyright 2004 Central Steel Fabricators, Inc.
http://www.centralsteelfab.com ◆ 2100 Parkes Drive, Broadview, IL 60155
Phone: 708-652-2037 Fax: 708-652-7010

FC355 FRAMING CLIP

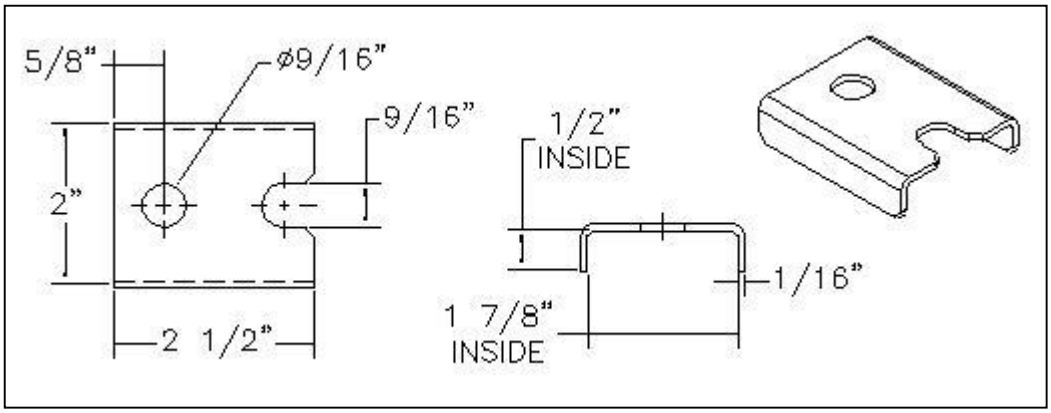

Specifications subject to change. Please contact CSF Customer Service for more information.
© copyright 2004 Central Steel Fabricators, Inc.
http://www.centralsteelfab.com ◆ 2100 Parkes Drive, Broadview, IL 60155
Phone: 708-652-2037 Fax: 708-652-7010

HN140 THRU HN149 SERIES - HEX NUT

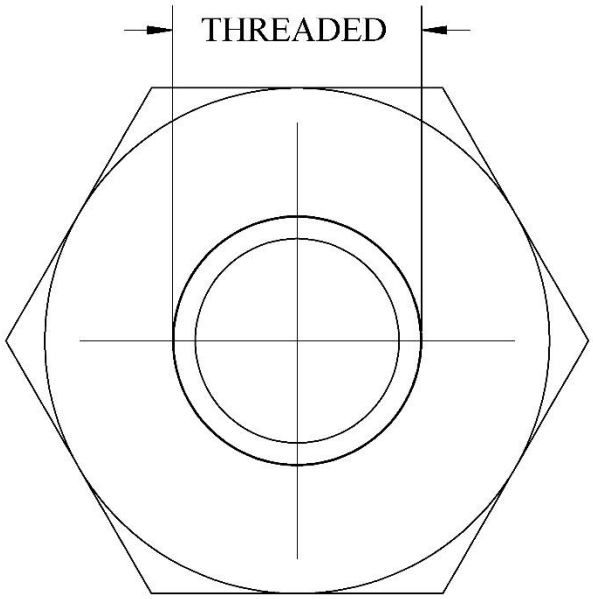

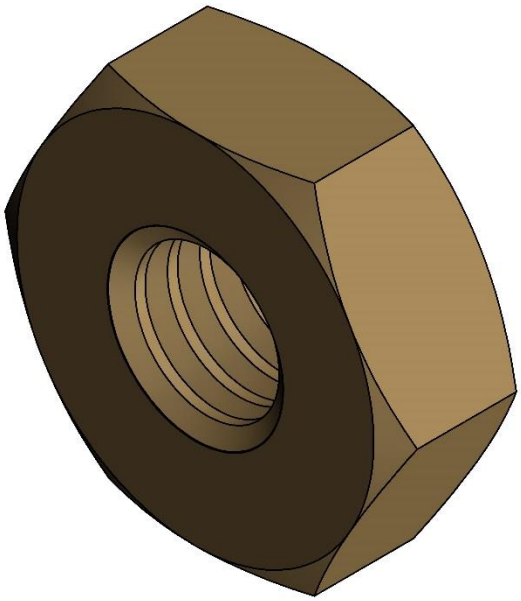

CSF#	DESCRIPTION [THREAD]
HN140	6-32UNC-2B - HEX NUT
HN141	8-32UNC-2B – HEX NUT
HN142	10-32UNF-2B – HEX NUT
HN143	12-24UNC-2B – HEX NUT
HN144	1/4-20UNC-2B – HEX NUT
HN145	5/16-18UNC-2B – HEX NUT
HN146	3/8-16UNC-2B – HEX NUT
HN147	1/2-13UNC-2B – HEX NUT
HN148	5/8-11UNC-2B – HEX NUT
HN149	3/4-10UNC-2B – HEX NUT

FINISH: ZINC AND YELLOW

NOTE: ALL 1/4-20 HEX NUTS AND UP [GRADE 5]

RVSD*1116

Specifications subject to change. Please contact CSF Customer Service for more information.
© copyright 2004 Central Steel Fabricators, Inc.
http://www.centralsteelfab.com ◆ 2100 Parkes Drive, Broadview, IL 60155
Phone: 708-652-2037 Fax: 708-652-7010

HN140 – THREAD SIZE #6-32UNC-2B - HEX NUT

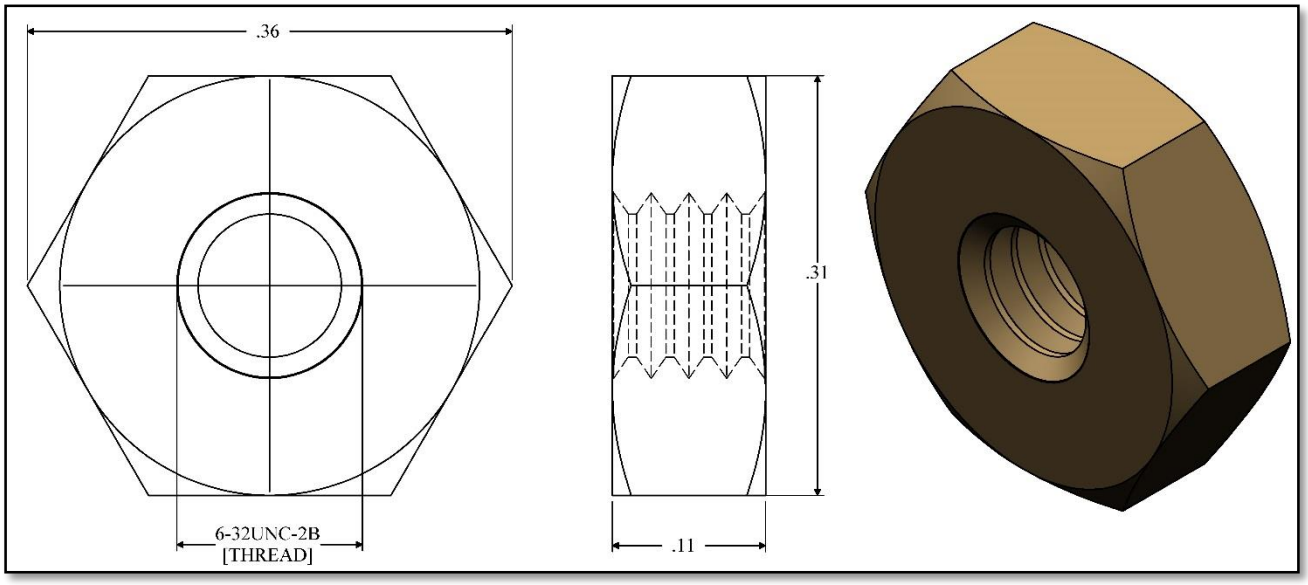

FINISH: ZINC AND YELLOW

RVSD*1216

Specifications subject to change. Please contact CSF Customer Service for more information.

© copyright 2004 Central Steel Fabricators, Inc.
http://www.centralsteelfab.com ◆ 2100 Parkes Drive, Broadview, IL 60155
Phone: 708-652-2037 Fax: 708-652-7010

HN141 – THREAD SIZE #8-32UNC-2B - HEX NUT

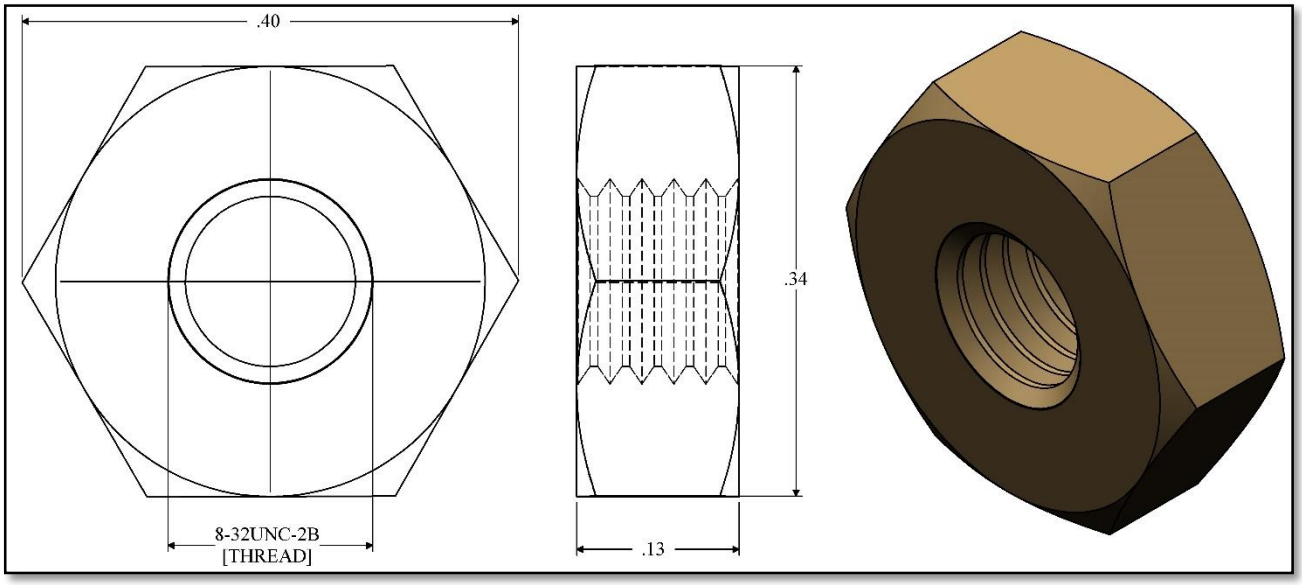

FINISH: ZINC AND YELLOW

RVSD*1216

Specifications subject to change. Please contact CSF Customer Service for more information.

© copyright 2004 Central Steel Fabricators, Inc.
http://www.centralsteelfab.com ◆ 2100 Parkes Drive, Broadview, IL 60155
Phone: 708-652-2037 Fax: 708-652-7010

HN142 – THREAD SIZE #10-32UNF-2B - HEX NUT

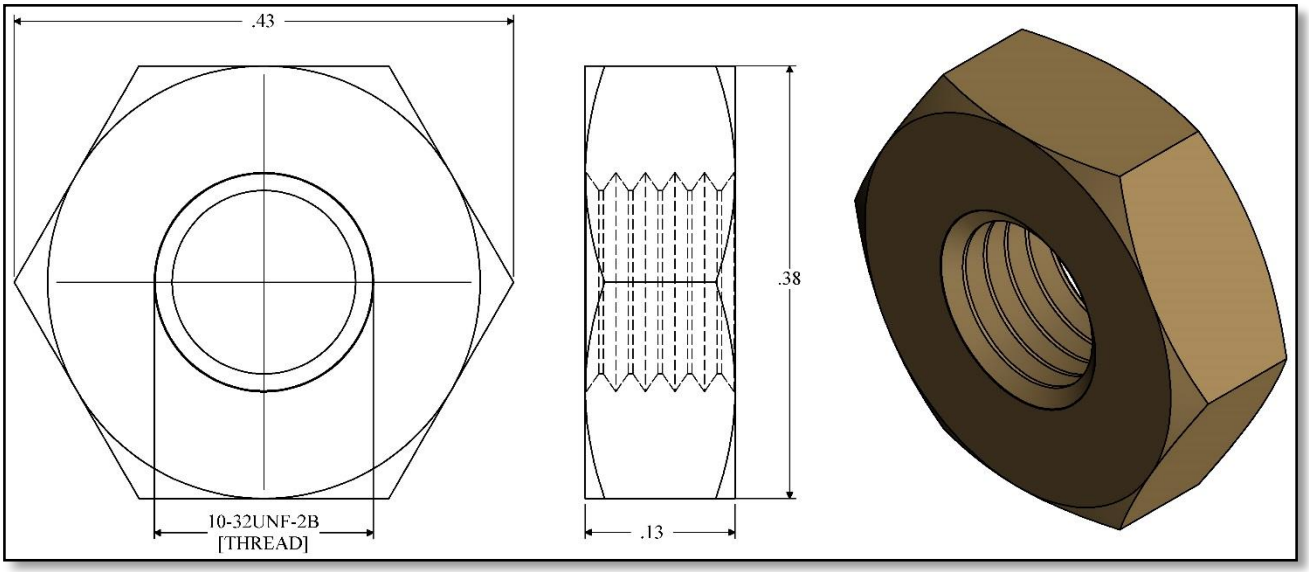

FINISH: ZINC AND YELLOW

RVSD*1216

Specifications subject to change. Please contact CSF Customer Service for more information.

© copyright 2004 Central Steel Fabricators, Inc.
http://www.centralsteelfab.com ◆ 2100 Parkes Drive, Broadview, IL 60155
Phone: 708-652-2037 Fax: 708-652-7010

HN143 – THREAD SIZE #12-24UNC-2B - HEX NUT

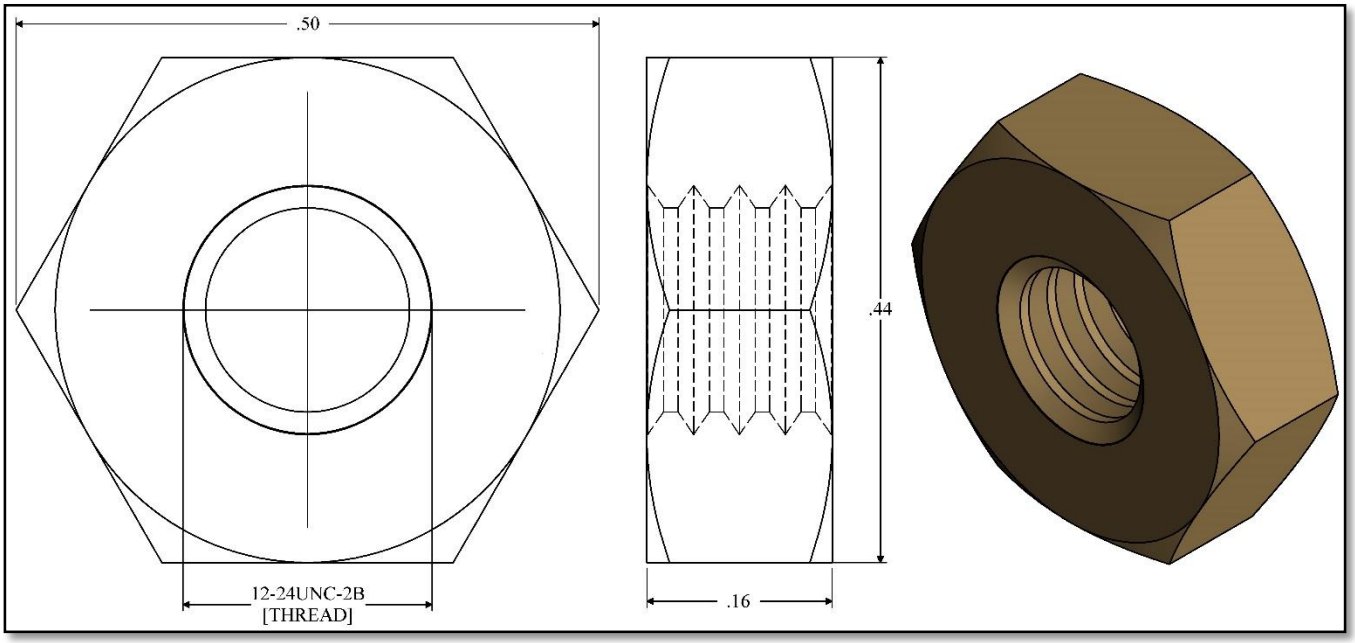

FINISH: ZINC AND YELLOW

RVSD*1216

Specifications subject to change. Please contact CSF Customer Service for more information.

© copyright 2004 Central Steel Fabricators, Inc.
http://www.centralsteelfab.com ◆ 2100 Parkes Drive, Broadview, IL 60155
Phone: 708-652-2037 Fax: 708-652-7010

HN144 – THREAD SIZE #1/4-20UNC-2B - HEX NUT

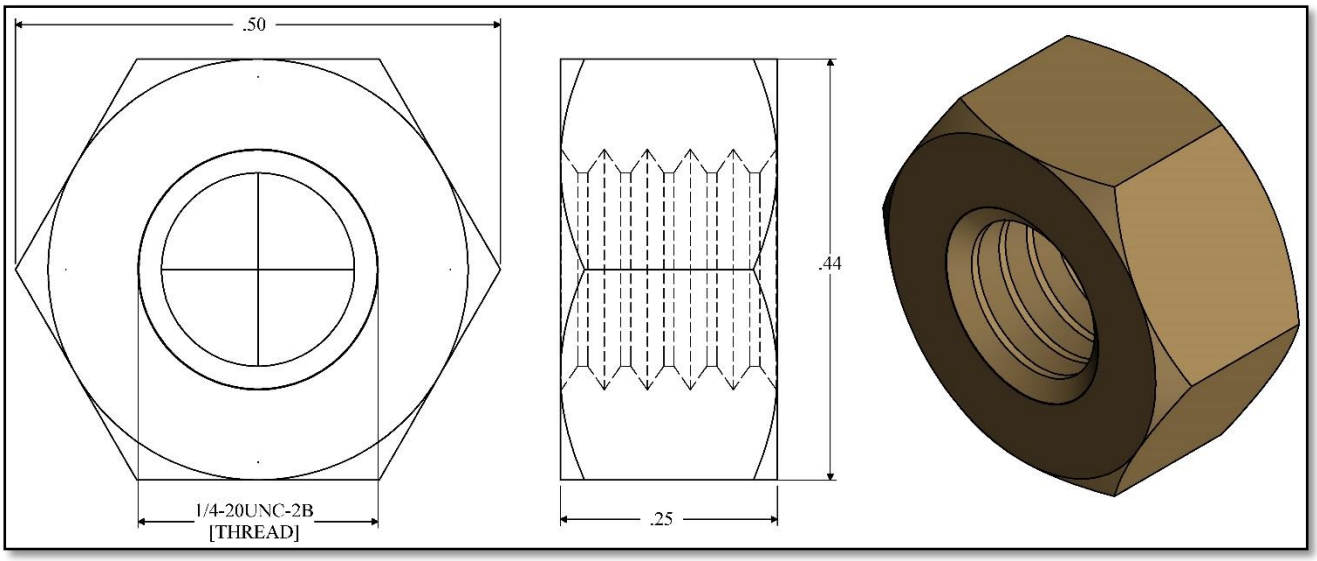

FINISH: ZINC AND YELLOW

RVSD*1216

Specifications subject to change. Please contact CSF Customer Service for more information.

© copyright 2004 Central Steel Fabricators, Inc.
http://www.centralsteelfab.com ◆ 2100 Parkes Drive, Broadview, IL 60155
Phone: 708-652-2037 Fax: 708-652-7010

HN145 – THREAD SIZE #5/16-18UNC-2B - HEX NUT

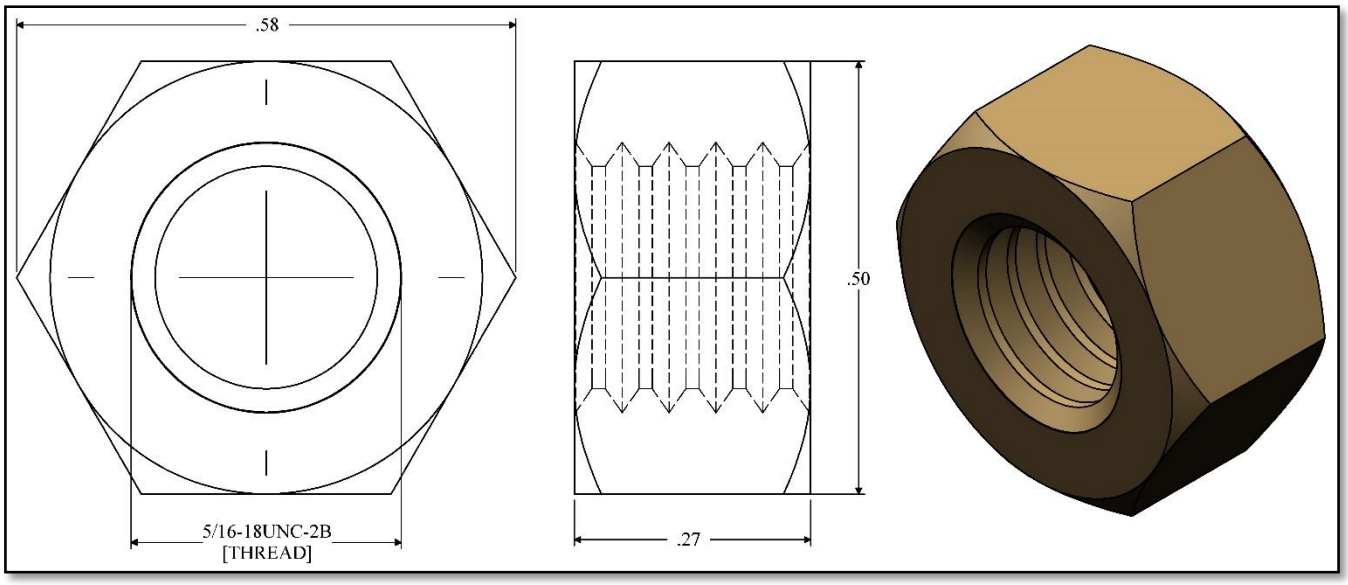

FINISH: ZINC AND YELLOW

RVSD*1216

Specifications subject to change. Please contact CSF Customer Service for more information.

© copyright 2004 Central Steel Fabricators, Inc.
http://www.centralsteelfab.com ◆ 2100 Parkes Drive, Broadview, IL 60155
Phone: 708-652-2037 Fax: 708-652-7010

HN146 – THREAD SIZE #3/8-16UNC-2B - HEX NUT

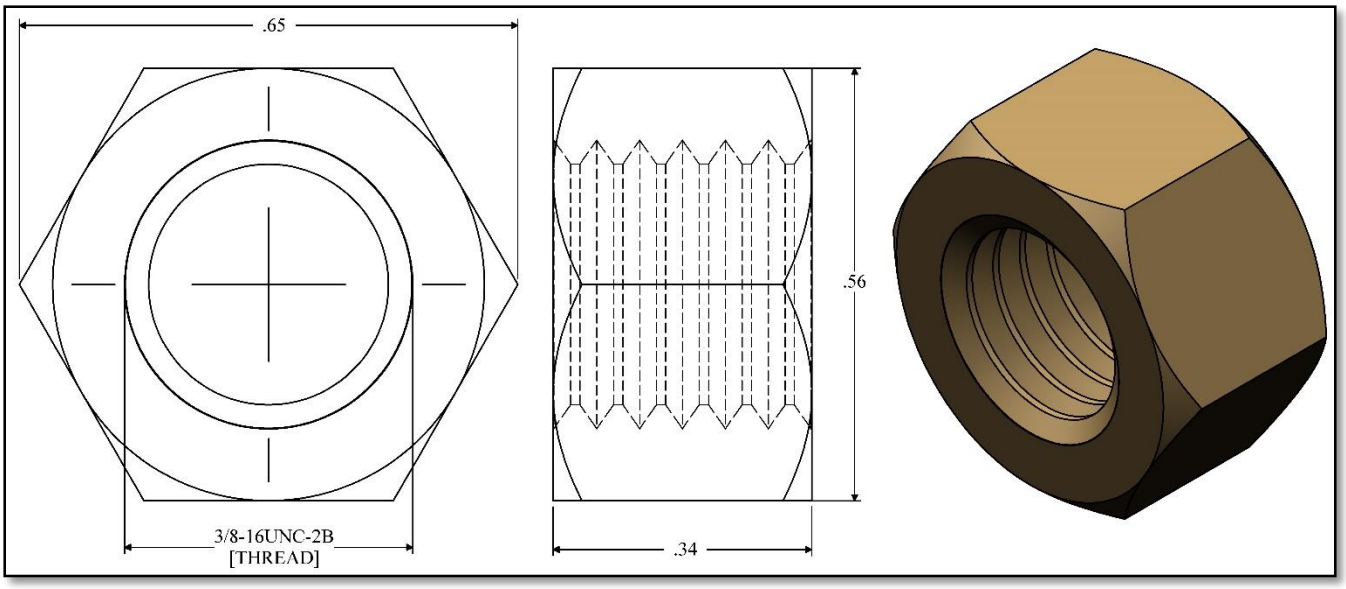

FINISH: ZINC AND YELLOW

RVSD*1216

Specifications subject to change. Please contact CSF Customer Service for more information.

© copyright 2004 Central Steel Fabricators, Inc.
http://www.centralsteelfab.com ◆ 2100 Parkes Drive, Broadview, IL 60155
Phone: 708-652-2037 Fax: 708-652-7010

HN147 – THREAD SIZE #1/2-13UNC-2B - HEX NUT

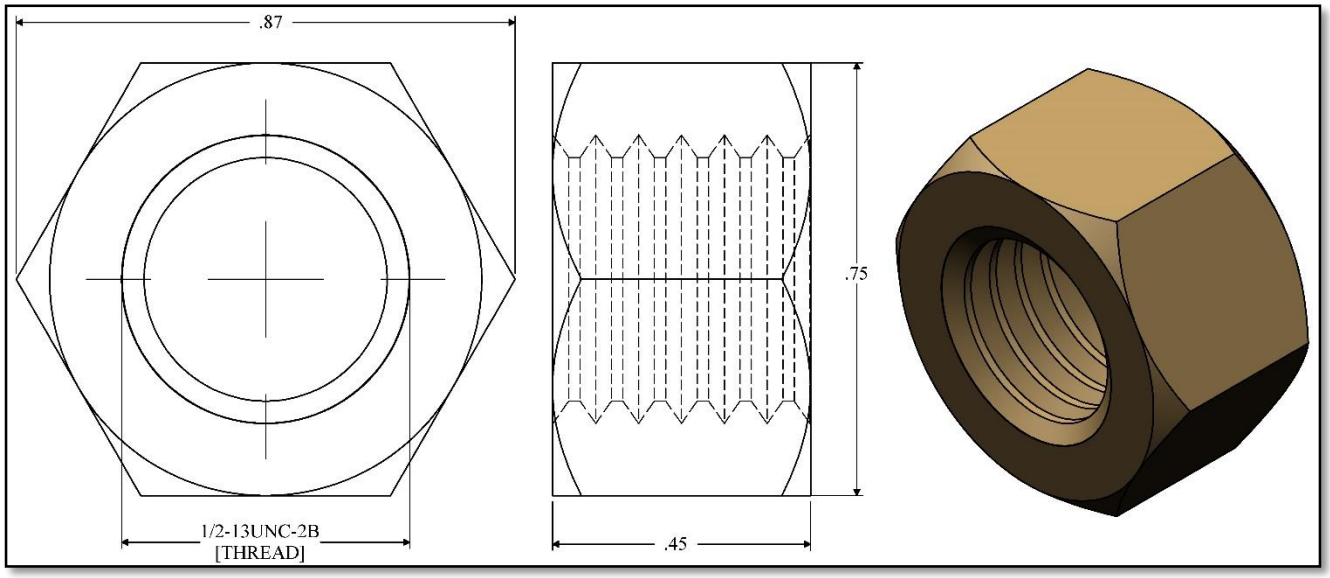

FINISH: ZINC AND YELLOW

RVSD*1216

Specifications subject to change. Please contact CSF Customer Service for more information.

© copyright 2004 Central Steel Fabricators, Inc.
http://www.centralsteelfab.com ◆ 2100 Parkes Drive, Broadview, IL 60155
Phone: 708-652-2037 Fax: 708-652-7010

HN148 – THREAD SIZE #5/8-11UNC-2B - HEX NUT

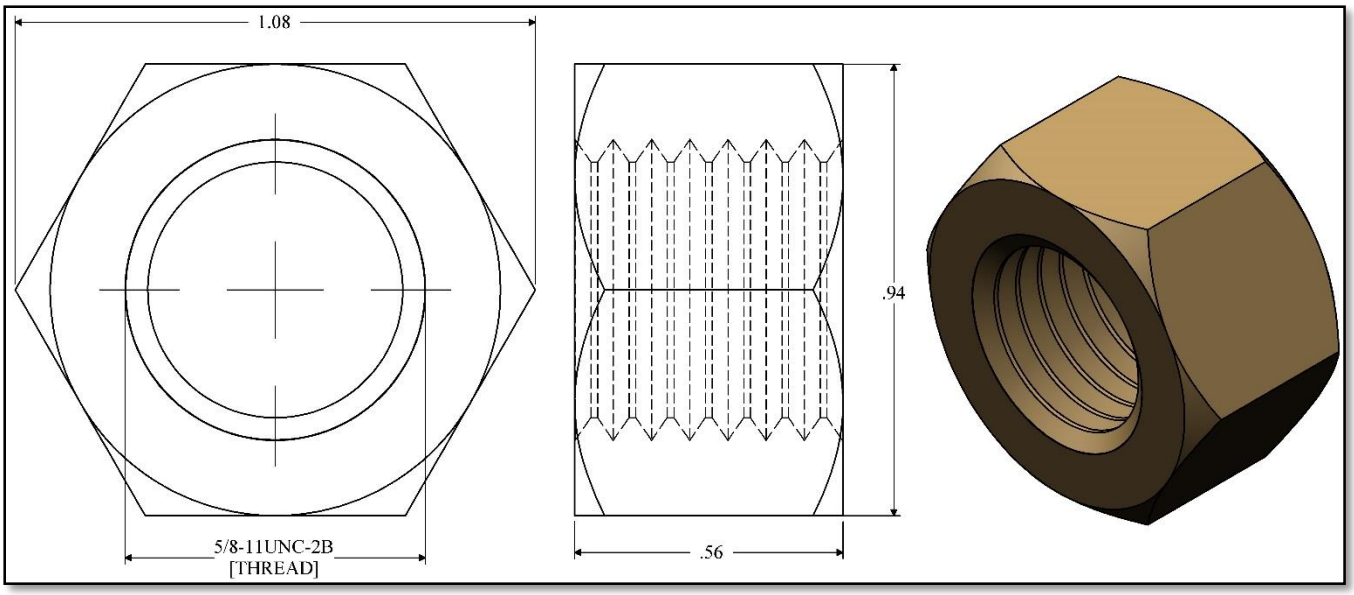

FINISH: ZINC AND YELLOW

RVSD*1216

Specifications subject to change. Please contact CSF Customer Service for more information.

© copyright 2004 Central Steel Fabricators, Inc.
http://www.centralsteelfab.com ◆ 2100 Parkes Drive, Broadview, IL 60155
Phone: 708-652-2037 Fax: 708-652-7010

HN149 – THREAD SIZE #3/4-10UNC-2B - HEX NUT

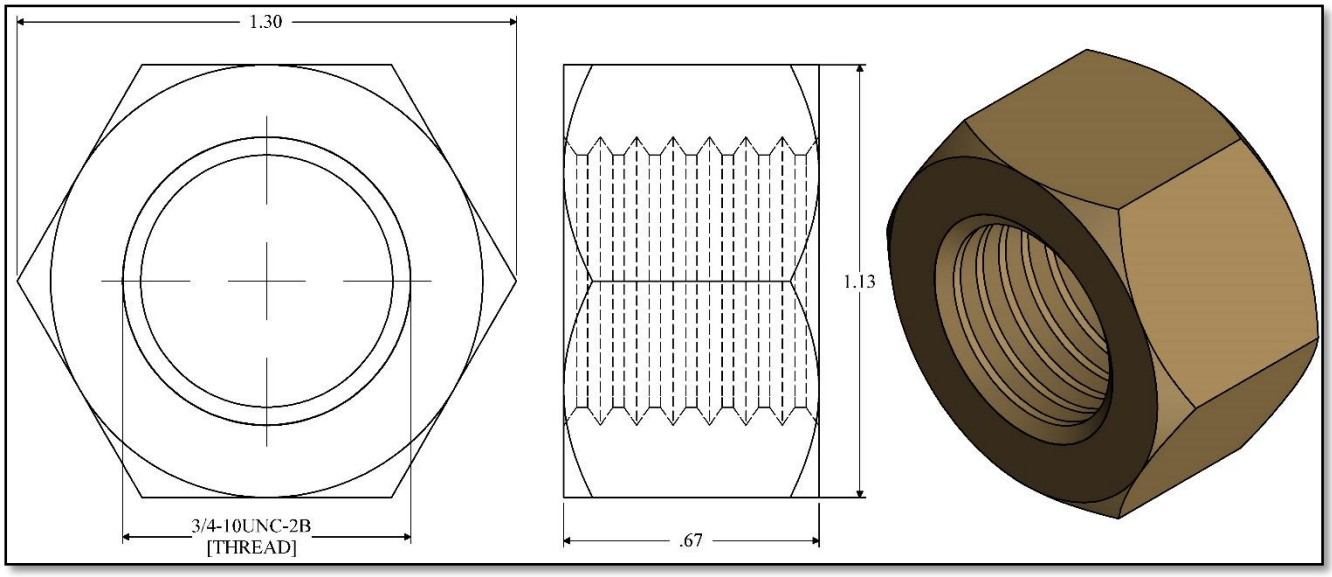

FINISH: ZINC AND YELLOW

RVSD*1216

Specifications subject to change. Please contact CSF Customer Service for more information.

© copyright 2004 Central Steel Fabricators, Inc.
http://www.centralsteelfab.com ◆ 2100 Parkes Drive, Broadview, IL 60155
Phone: 708-652-2037 Fax: 708-652-7010

Hold Down Plate Series

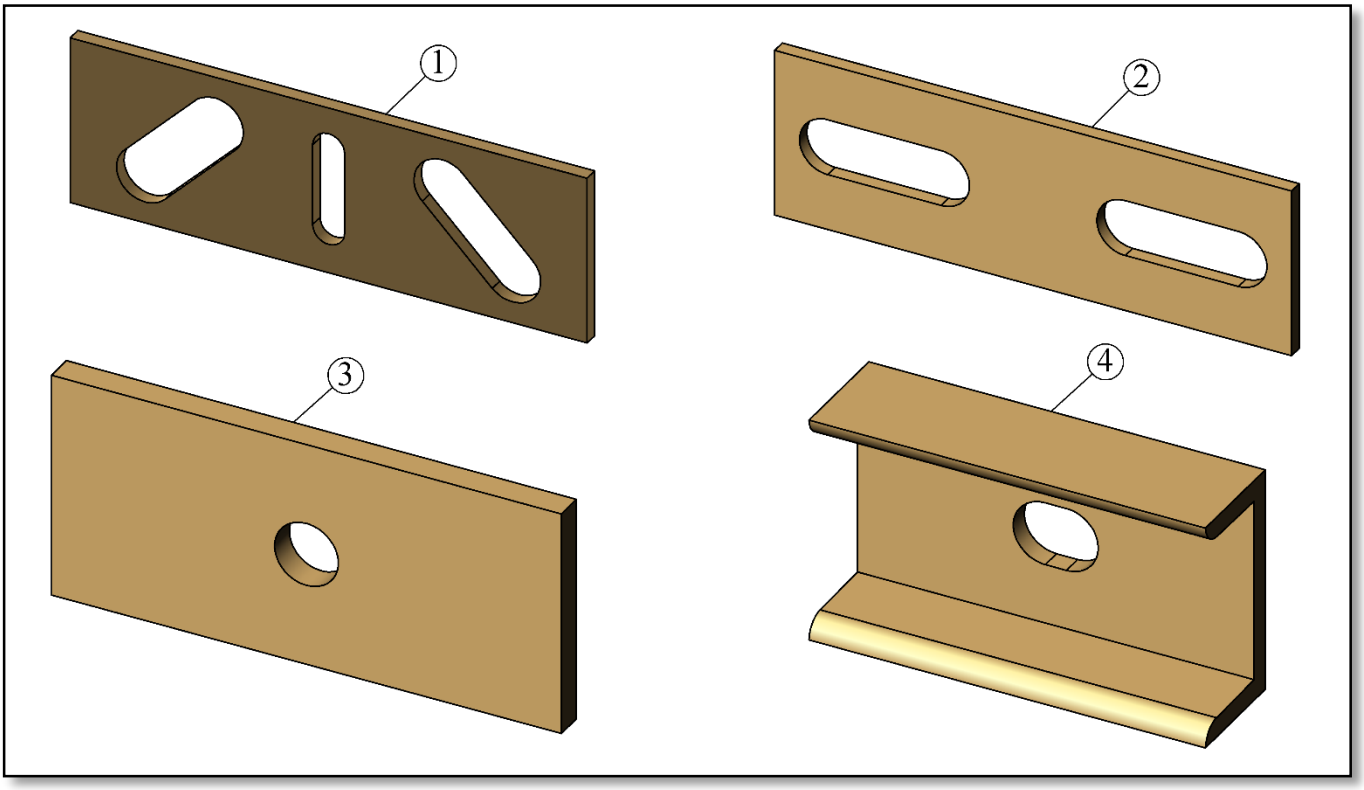

Item#	CSF P/N#	Description
1	HPU3000	Hold Down Plate for RU/ Network Bays
2	HPM3000	Hold Down Plate for 4SB Universal Network Bays
3	HDP2450	Hold Down Plate
4	HDC235	Hold Down Channel

Notes:
Finish: Zinc and Yellow

RVSD*0417

Specifications subject to change. Please contact CSF Customer Service for more information.

© copyright 2004 Central Steel Fabricators, Inc.
http://www.centralsteelfab.com ◆ 2100 Parkes Drive, Broadview, IL 60155
Phone: 708-652-2037 Fax: 708-652-7010

HPU3000 - Hold Down Plate For RU/ Network Bays

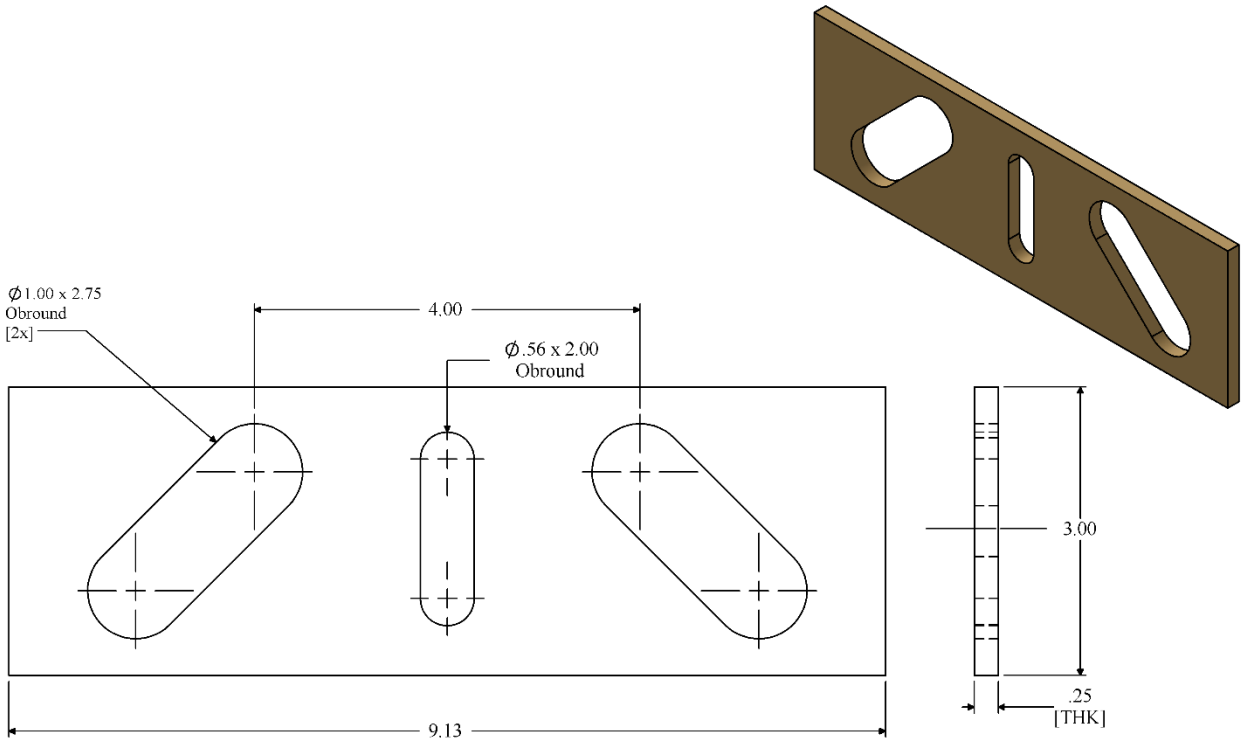

CSF P/N#	Description
HPU3000	Hold Down Plate for RU/ Network Bays

Notes:
Finish: Zinc and Yellow

RVSD*0417

Specifications subject to change. Please contact CSF Customer Service for more information.

© copyright 2004 Central Steel Fabricators, Inc.
http://www.centralsteelfab.com ◆ 2100 Parkes Drive, Broadview, IL 60155
Phone: 708-652-2037 Fax: 708-652-7010

HPM3000 - Hold Down Plate For 4SB Universal Network Bays

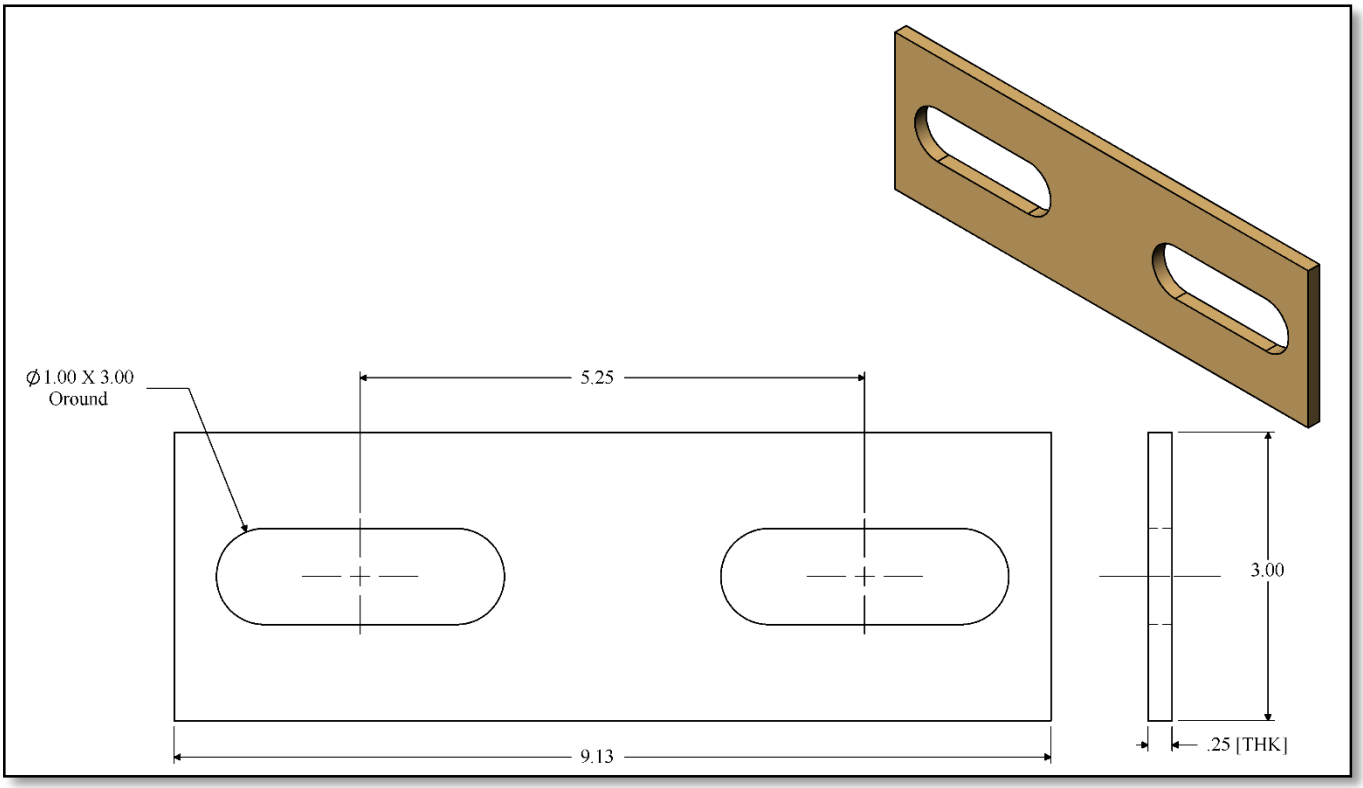

CSF P/N#	Description
HPM3000	Hold Down Plate for 4SB Universal Network Bays

Notes:
Finish: Zinc and Yellow

RVSD*0417

Specifications subject to change. Please contact CSF Customer Service for more information.

© copyright 2004 Central Steel Fabricators, Inc.
http://www.centralsteelfab.com ◆ 2100 Parkes Drive, Broadview, IL 60155
Phone: 708-652-2037 Fax: 708-652-7010

HDP2450 - Hold Down Plate

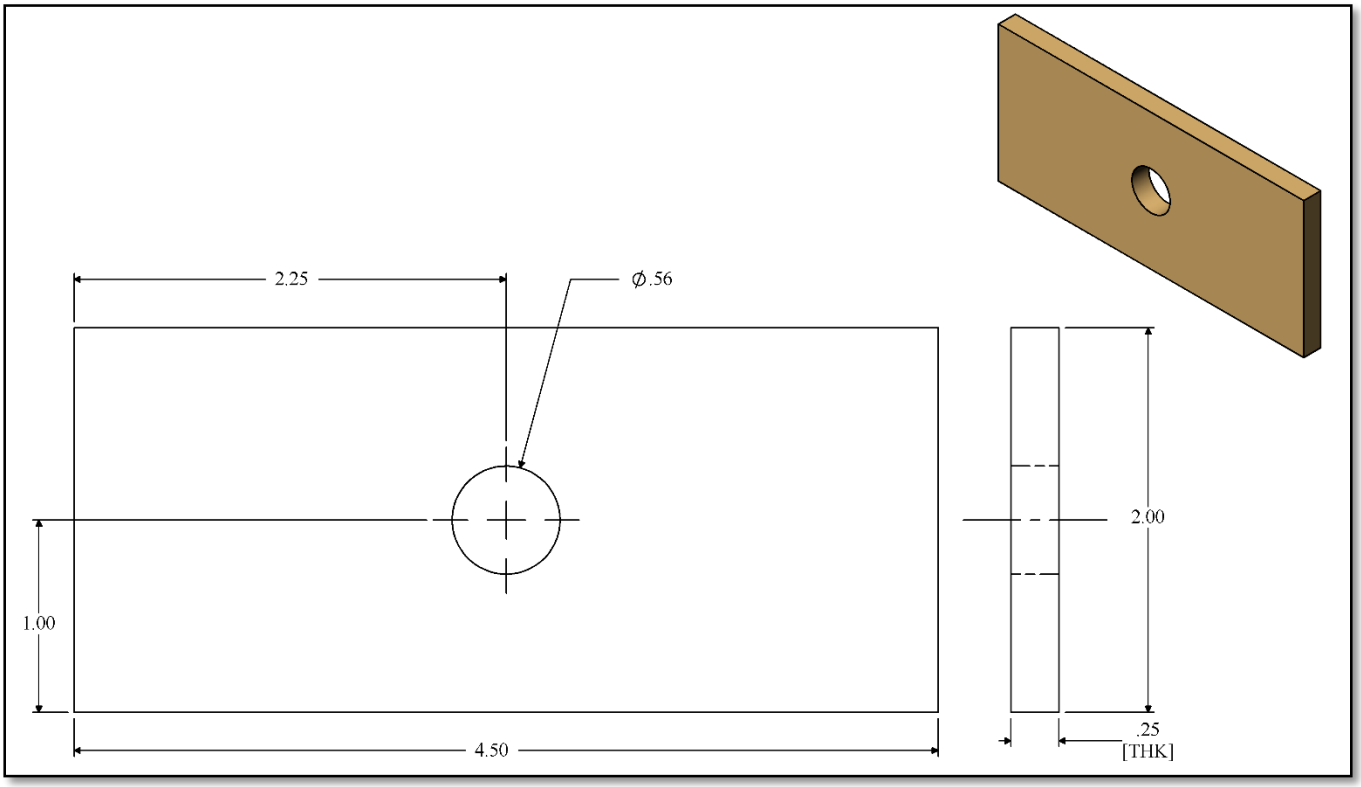

CSF P/N#	Description
HDP2450	Hold Down Plate For 1/2" Hardware

Notes:
Finish: Zinc and Yellow

RVSD*0417

Specifications subject to change. Please contact CSF Customer Service for more information.

© copyright 2004 Central Steel Fabricators, Inc.
http://www.centralsteelfab.com ◆ 2100 Parkes Drive, Broadview, IL 60155
Phone: 708-652-2037 Fax: 708-652-7010

HDP2462 - Hold Down Plate

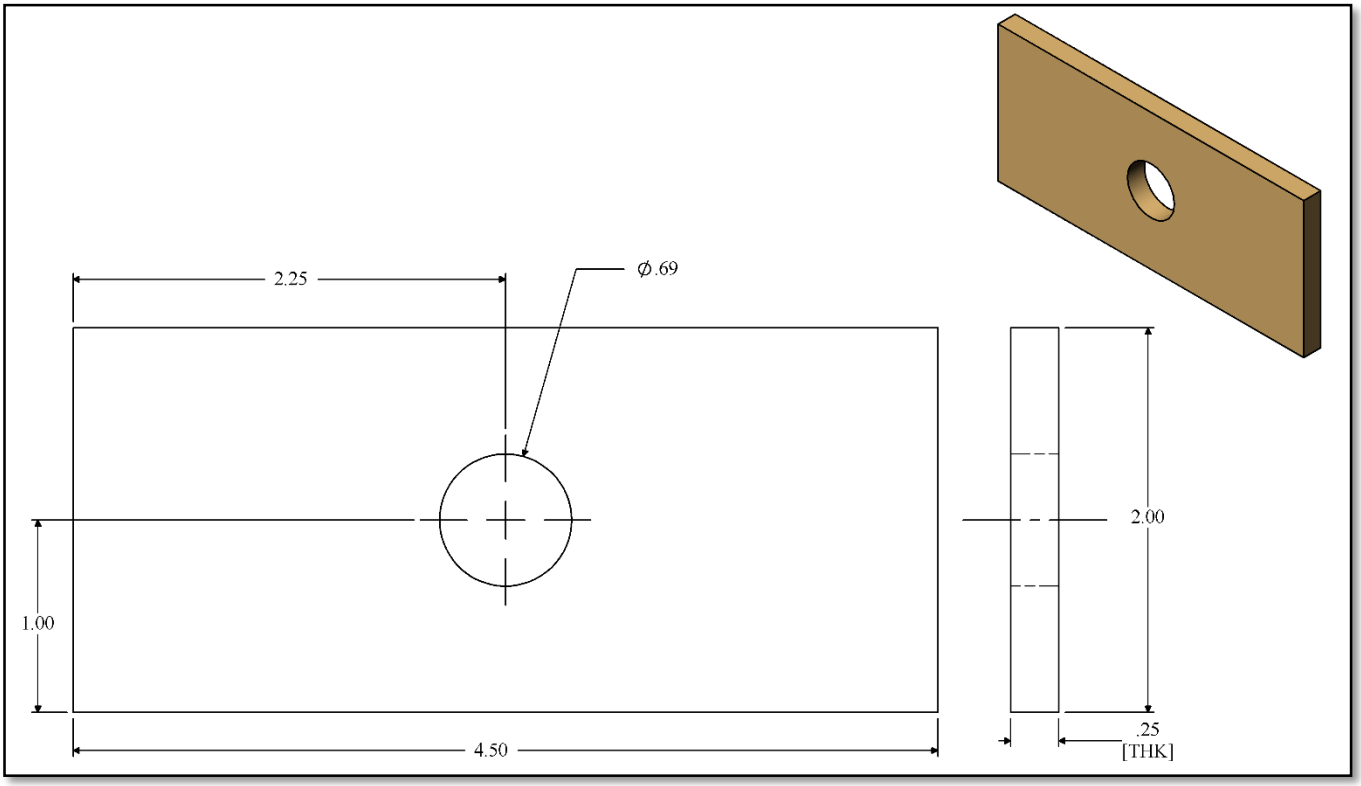

CSF P/N#	Description
HDP2462	Hold Down Plate For 5/8" Hardware

Notes:
Finish: Zinc and Yellow

RVSD*0417

Specifications subject to change. Please contact CSF Customer Service for more information.

© copyright 2004 Central Steel Fabricators, Inc.
http://www.centralsteelfab.com ◆ 2100 Parkes Drive, Broadview, IL 60155
Phone: 708-652-2037 Fax: 708-652-7010

HDC235 - Hold Down Channel

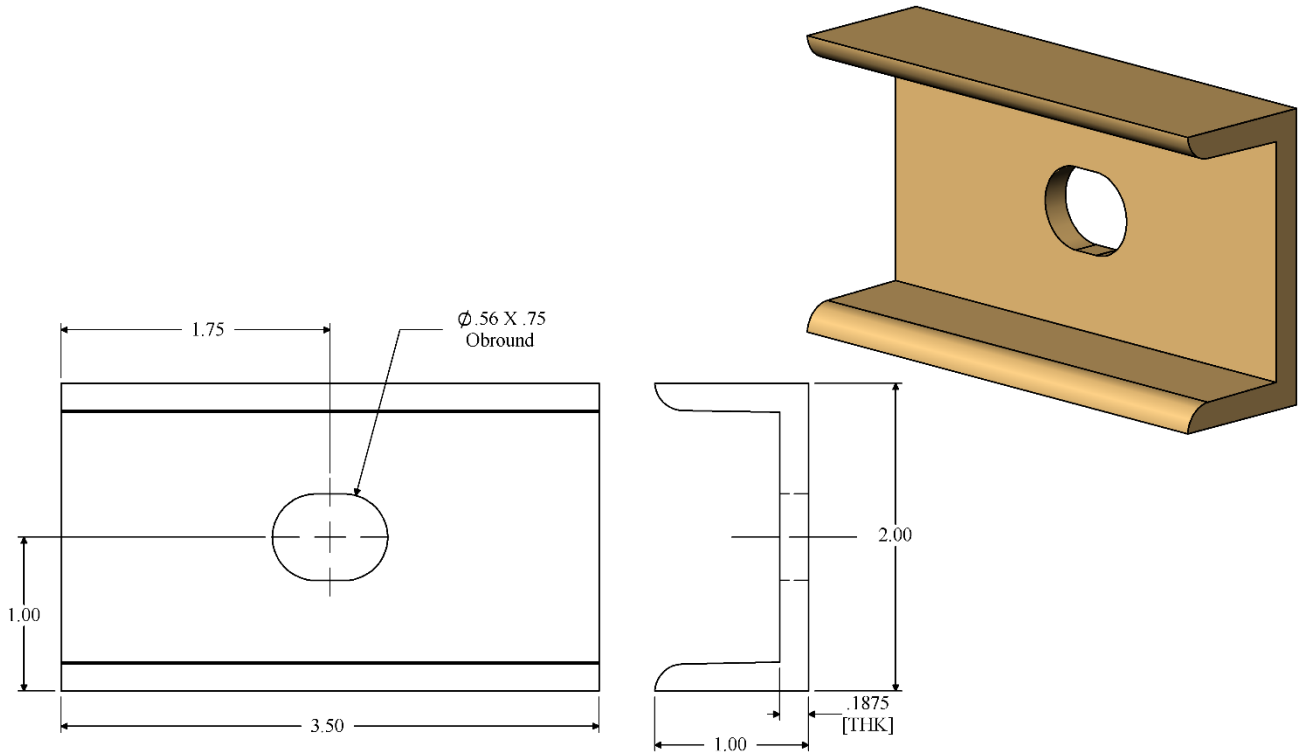

CSF P/N#	Description
HDC235	Hold Down Channel

Notes:
Finish: Zinc and Yellow

RVSD*0417

Specifications subject to change. Please contact CSF Customer Service for more information.

© copyright 2004 Central Steel Fabricators, Inc.
http://www.centralsteelfab.com ◆ 2100 Parkes Drive, Broadview, IL 60155
Phone: 708-652-2037 Fax: 708-652-7010

JB240 Series J-BOLT

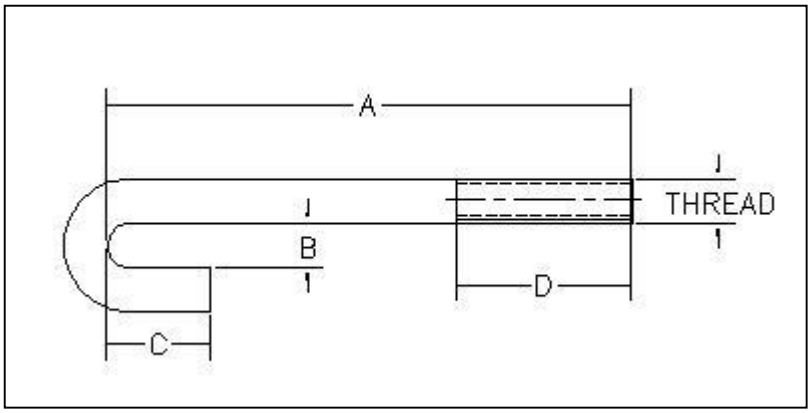

ITEM	"A"	"B"	"C"	"D"	THREAD
JB240	4 1/2"	7/16"	3/4"	1 1/2"	1/4"-20UNC
JB241	1 3/4"	1/4"	1/2"	3/4"	1/4"-20UNC
JB242	3 1/4"	7/16"	3/4"	1 1/2"	1/4"-20UNC
JB243	2 1/4"	7/16"	3/4"	1"	1/4"-20UNC
JB244	3 3/4"	5/16"	3/4"	1 1/4"	5/16"-18UNC
JB245	3 1/4"	5/16"	3/4"	3/4"	5/16"-18UNC
JB246	3 1/4"	7/16"	3/4"	1 1/2"	5/16"-18UNC
JB247	2 1/4"	7/16"	3/4"	1"	5/16"-18UNC
JB248	3 3/4"	7/16"	3/4"	1 1/2"	5/16"-18UNC
JB249	2 3/4"	7/16"	3/4"	1"	5/16"-18UNC

FINISH: ZINC AND YELLOW

Specifications subject to change. Please contact CSF Customer Service for more information.
© copyright 2004 Central Steel Fabricators, Inc.
http://www.centralsteelfab.com ◆ 2100 Parkes Drive, Broadview, IL 60155
Phone: 708-652-2037 Fax: 708-652-7010

SJB Series – Spanner "J" Bolt

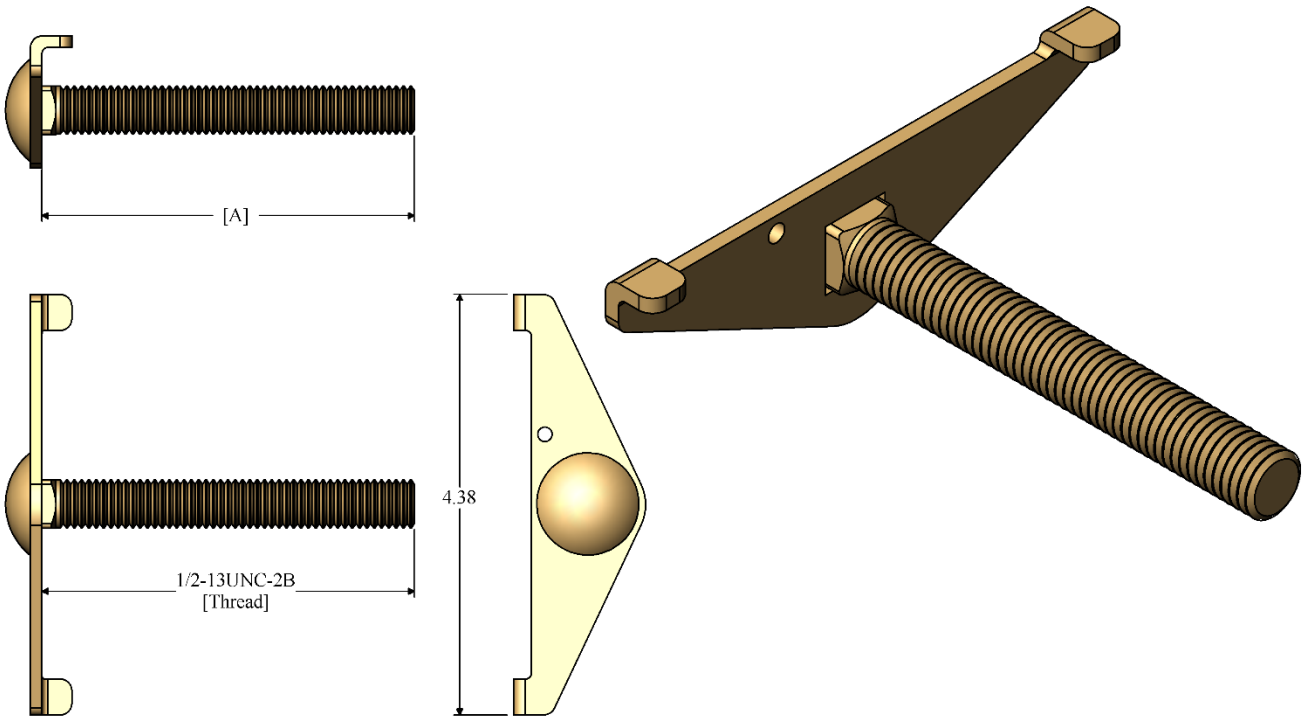

SJB Series – Spanner "J" Bolt		
Item#	[A]	Description
SJB3	3.875"	Spanner "J" Bolt x 3.875" – ZY
SJB4	4.375"	Spanner "J" Bolt x 4.375 "– ZY
SJB5	4.875"	Spanner "J" Bolt x 4.875" - ZY
SJB6	6.375"	Spanner "J" Bolt x 6.375" – ZY

Notes:
Finish Code: Zinc and Yellow

RVSD*0517

Specifications subject to change. Please contact CSF Customer Service for more information.

© copyright 2004 Central Steel Fabricators, Inc.
http://www.centralsteelfab.com ◆ 2100 Parkes Drive, Broadview, IL 60155
Phone: 708-652-2037 Fax: 708-652-7010

CJB Series – Clip "J" Bolt

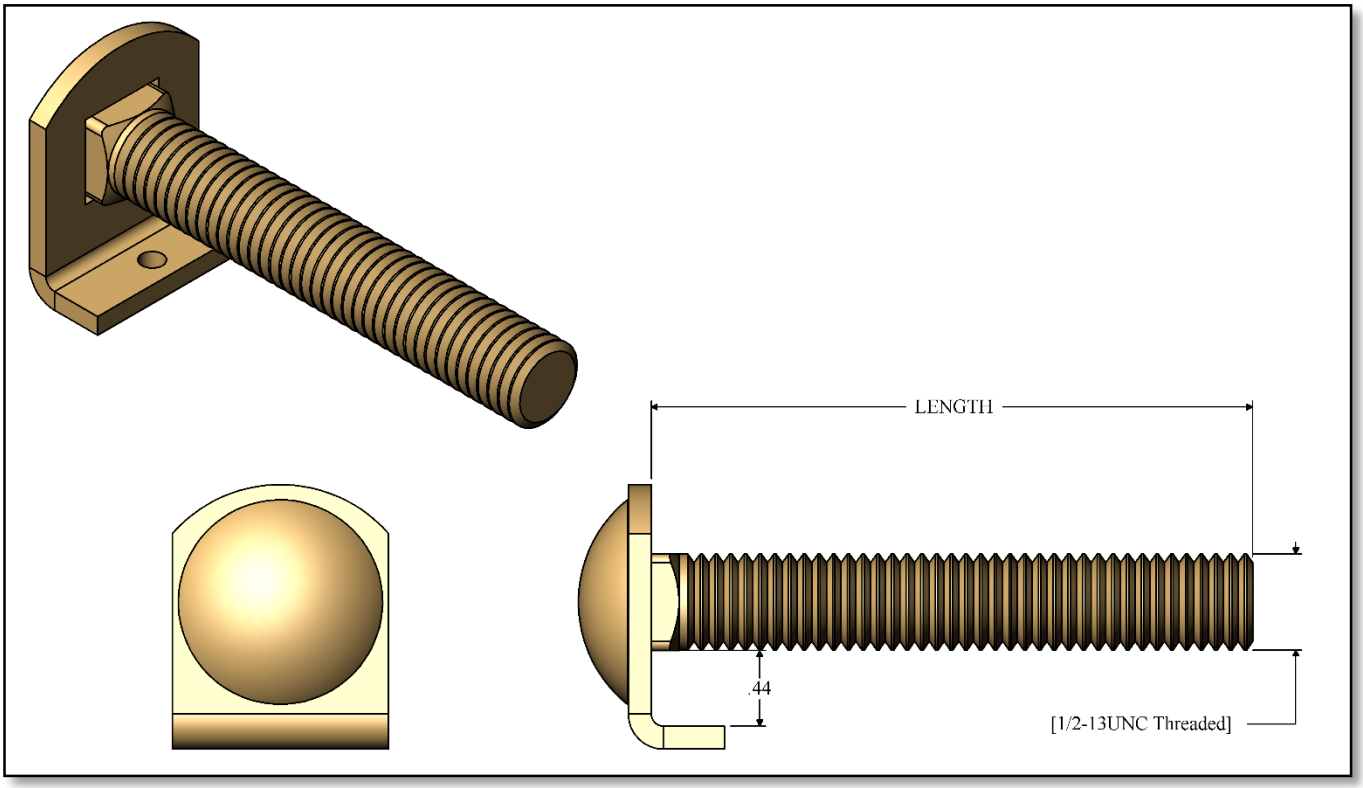

CSF#	Description	Length
CJB1	1/2-13 - "J" Bolt Clip	3.12
CJB2	1/2-13 - "J" Bolt Clip	3.38
CJB3	1/2-13 - "J" Bolt Clip	3.88
CJB4	1/2-13 - "J" Bolt Clip	4.38
CJB5	1/2-13 - "J" Bolt Clip	4.88
CJB6	1/2-13 - "J" Bolt Clip	6.38
CJB09	1/2-13 - "J" Bolt Clip	2.62

NOTES:
FINISH: ZINC AND YELLOW

RVSD*0117

Specifications subject to change. Please contact CSF Customer Service for more information.

© copyright 2004 Central Steel Fabricators, Inc.
http://www.centralsteelfab.com ◆ 2100 Parkes Drive, Broadview, IL 60155
Phone: 708-652-2037 Fax: 708-652-7010

CJB Series – Clip "J" Bolt [Continuity]

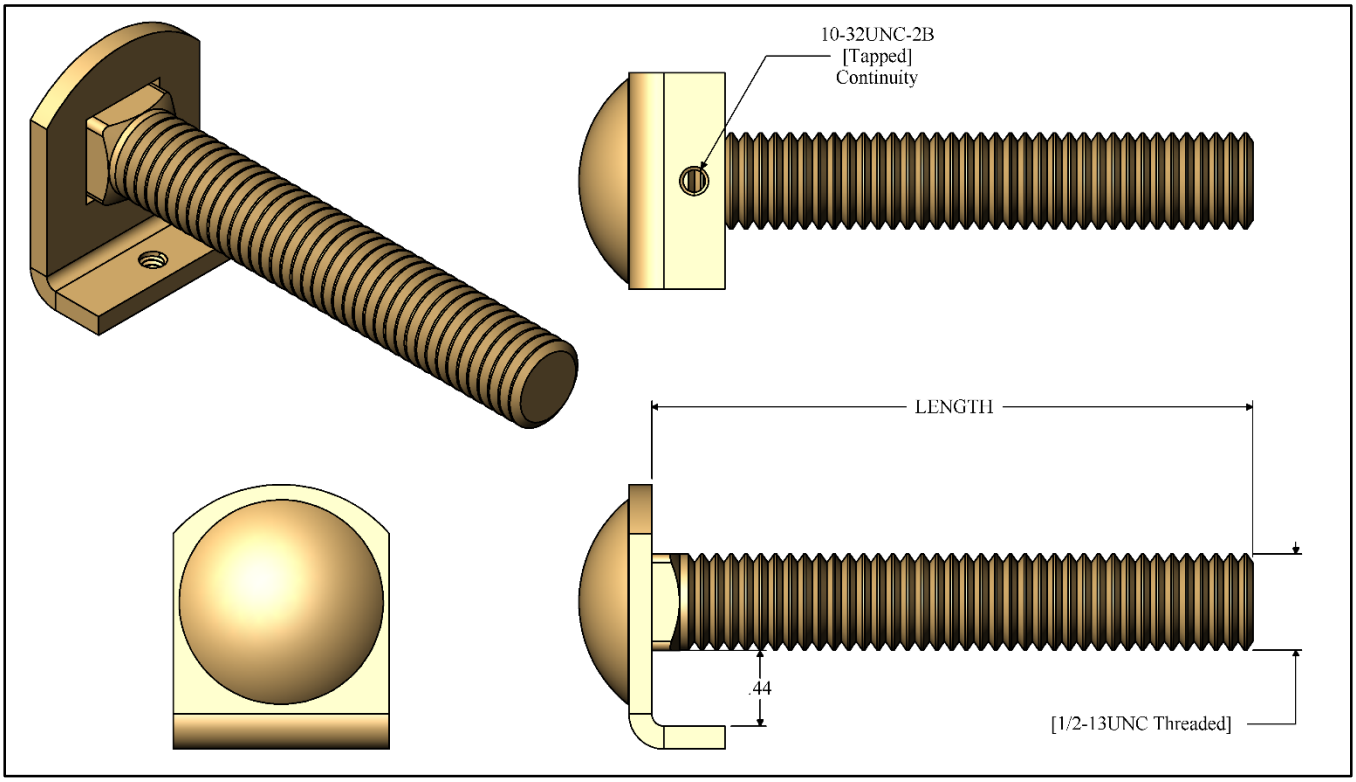

CSF#	Description	Length
CJB4CN	1/2-13 - "J" Bolt Clip [Continuity]	4.38
CJB5CN	1/2-13 - "J" Bolt Clip [Continuity]	4.88

NOTES:
FINISH: ZINC AND YELLOW

RVSD*0117

Specifications subject to change. Please contact CSF Customer Service for more information.

© copyright 2004 Central Steel Fabricators, Inc.
http://www.centralsteelfab.com ◆ 2100 Parkes Drive, Broadview, IL 60155
Phone: 708-652-2037 Fax: 708-652-7010

FH Series FLAT HEAD MACHINE SCREW

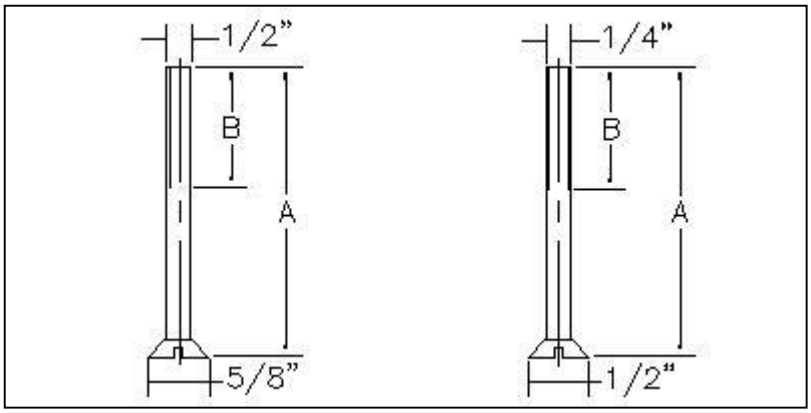

1/4-20 THREAD		
ITEM	"A"	"B"
FH0701	7/16"	FULL
FH0702	1/2"	FULL
FH0703	5/8"	FULL
FH0704	3/4"	FULL
FH0705	7/8"	FULL
FH0706	1"	FULL
FH0707	1 1/8"	FULL
FH0708	1 1/4"	FULL
FH0709	1 1/2"	FULL
FH0710	1 3/4"	FULL
FH0711	2"	FULL
FH0712	2 1/4"	1 3/4"
FH0713	2 1/2"	1 3/4"
FH0714	2 3/4"	1 3/4"
FH0715	3"	1 3/4"

5/16-18 THREAD		
ITEM	"A"	"B"
FH0901	1/2"	FULL
FH0902	5/8"	FULL
FH0903	3/4"	FULL
FH0904	7/8"	FULL
FH0905	1"	FULL
FH0906	1 1/4"	FULL
FH0907	1 1/2"	FULL
FH0908	1 3/4"	FULL
FH0909	2"	FULL
FH0910	2 1/2"	1 3/4"
FH0911	3"	1 3/4"

FINISH: ZINC AND YELLOW

Specifications subject to change. Please contact CSF Customer Service for more information.
© copyright 2004 Central Steel Fabricators, Inc.
http://www.centralsteelfab.com ◆ 2100 Parkes Drive, Broadview, IL 60155
Phone: 708-652-2037 Fax: 708-652-7010

RH Series ROUND HEAD MACHINE SCREW

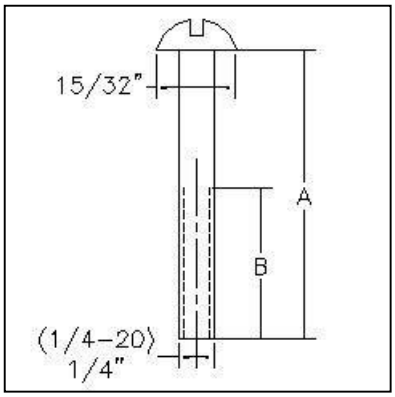

FINISH: ZINC AND YELLOW

8-32 THREAD		
ITEM	"A"	"B"
RH0201	3/16"	FULL
RH0202	1/4"	FULL
RH0203	5/16"	FULL
RH0204	3/8"	FULL
RH0205	7/16"	FULL
RH0206	1/2"	FULL
RH0207	5/8"	FULL
RH0208	3/4"	FULL
RH0209	7/8"	FULL
RH0210	1"	FULL
RH0211	1 1/8"	FULL
RH0212	1 1/4"	FULL
RH0213	1 1/2"	FULL
RH0214	1 3/4"	FULL
RH0215	2"	FULL
RH0216	2 1/4"	1 3/4"
RH0217	2 1/2"	1 3/4"
RH0218	3"	1 3/4"

10-32 THREAD		
ITEM	"A"	"B"
RH0301	1/4"	FULL
RH0302	5/16"	FULL
RH0303	3/8"	FULL
RH0304	7/16"	FULL
RH0305	1/2"	FULL
RH0306	5/8"	FULL
RH0307	3/4"	FULL
RH0308	7/8"	FULL
RH0309	1"	FULL
RH0310	1 1/8"	FULL
RH0311	1 1/4"	FULL
RH0312	1 1/2"	FULL
RH0313	1 3/4"	FULL
RH0314	2"	FULL
RH0315	2 1/4"	1 3/4"
RH0316	2 1/2"	1 3/4"
RH0317	2 3/4"	1 3/4"
RH0318	3"	1 3/4"

1/4-20 THREAD		
ITEM	"A"	"B"
RH0501	5/16"	FULL
RH0502	3/8"	FULL
RH0503	1/2"	FULL
RH0504	5/8"	FULL
RH0505	3/4"	FULL
RH0506	7/8"	FULL
RH0507	1"	FULL
RH0508	1 1/8"	FULL
RH0509	1 1/4"	FULL
RH0510	1 1/2"	FULL
RH0511	1 3/4"	FULL
RH0512	2"	FULL
RH0513	2 1/4"	1 1/4"
RH0514	2 1/2"	1 3/4"
RH0515	2 3/4"	1 3/4"
RH0516	3"	1 3/4"

Specifications subject to change. Please contact CSF Customer Service for more information.
© copyright 2004 Central Steel Fabricators, Inc.
http://www.centralsteelfab.com ◆ 2100 Parkes Drive, Broadview, IL 60155
Phone: 708-652-2037 Fax: 708-652-7010

PAN HEAD MACHINE SCREW

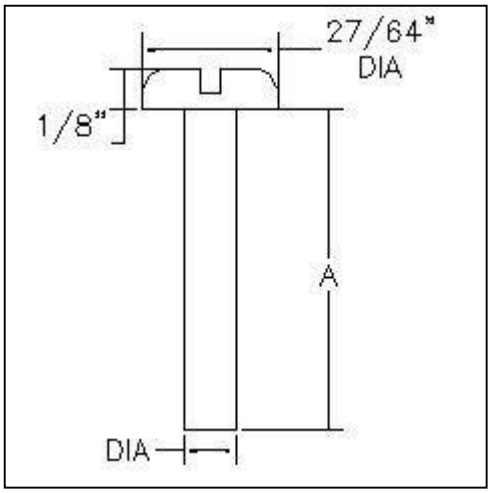

FINISH: ZINC AND YELLOW

12-24 THREAD		
ITEM	"A"	DIA
PH0400	1/4"	7/32"
PH0401	3/8"	7/32"
PH0402	7/16"	7/32"
PH0403	1/2"	7/32"
PH0404	5/8"	7/32"
PH0405	3/4"	7/32"
PH0406	1"	7/32"

8-32 THREAD		
ITEM	"A"	DIA
PH0200	1/4"	5/32"
PH0206	1/2"	5/32"

10-32 THREAD		
ITEM	"A"	DIA
PH0302	1/4"	3/16"

Specifications subject to change. Please contact CSF Customer Service for more information.
© copyright 2004 Central Steel Fabricators, Inc.
http://www.centralsteelfab.com ◆ 2100 Parkes Drive, Broadview, IL 60155
Phone: 708-652-2037 Fax: 708-652-7010

HEX HEAD SELECTION

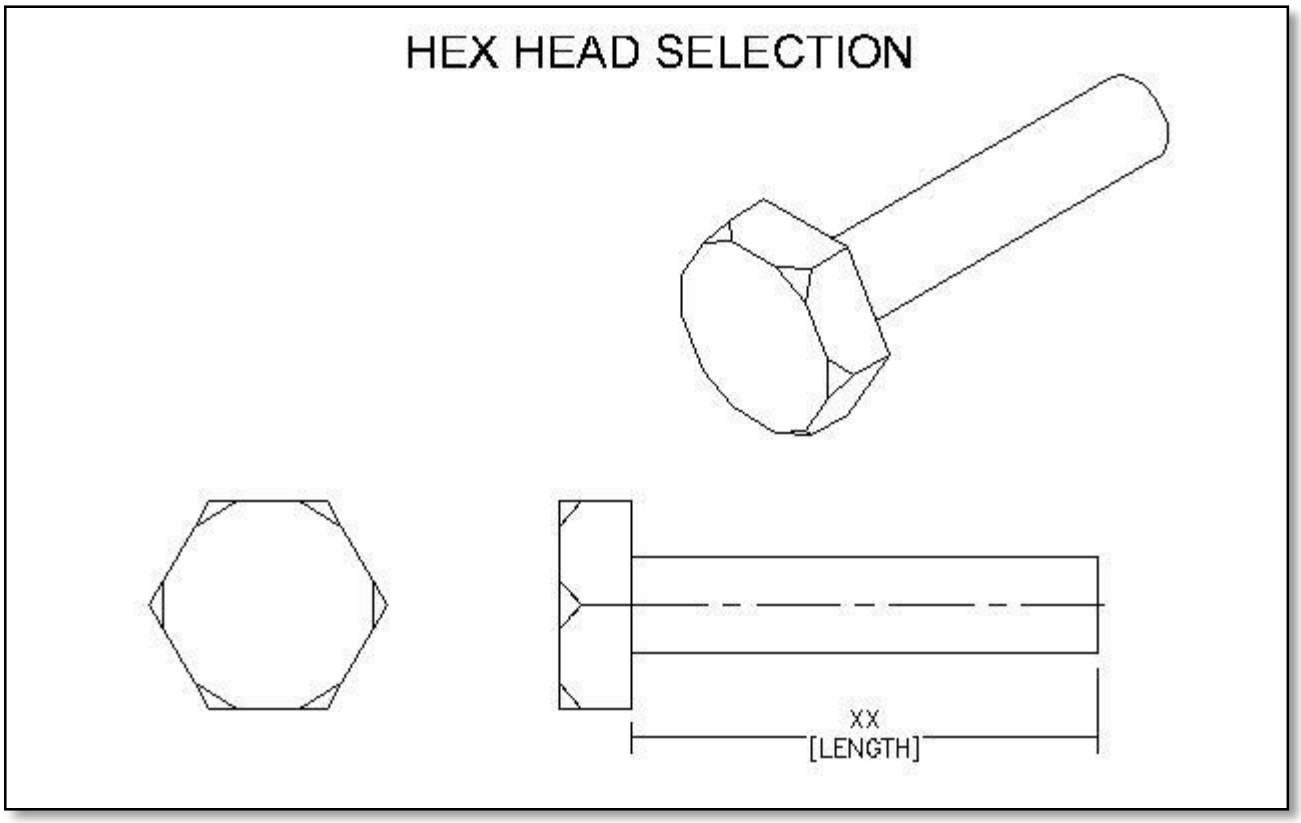

ITEM	DESCRIPTION
HH06XX	1/4–20 THREAD
HH08XX	5/16-18 THREAD
HH10XX	3/8-16 THREAD
HH11XX	1/2-13 THREAD

NOTE: ALL 1/4-20 SCREWS AND UP [GRADE 5]

RVSD*1211

Specifications subject to change. Please contact CSF Customer Service for more information.
© copyright 2004 Central Steel Fabricators, Inc.
http://www.centralsteelfab.com ◆ 2100 Parkes Drive, Broadview, IL 60155
Phone: 708-652-2037 Fax: 708-652-7010

HH0600 – HH0800 Series - HEX HEAD CAP SCREW [GRADE 5]

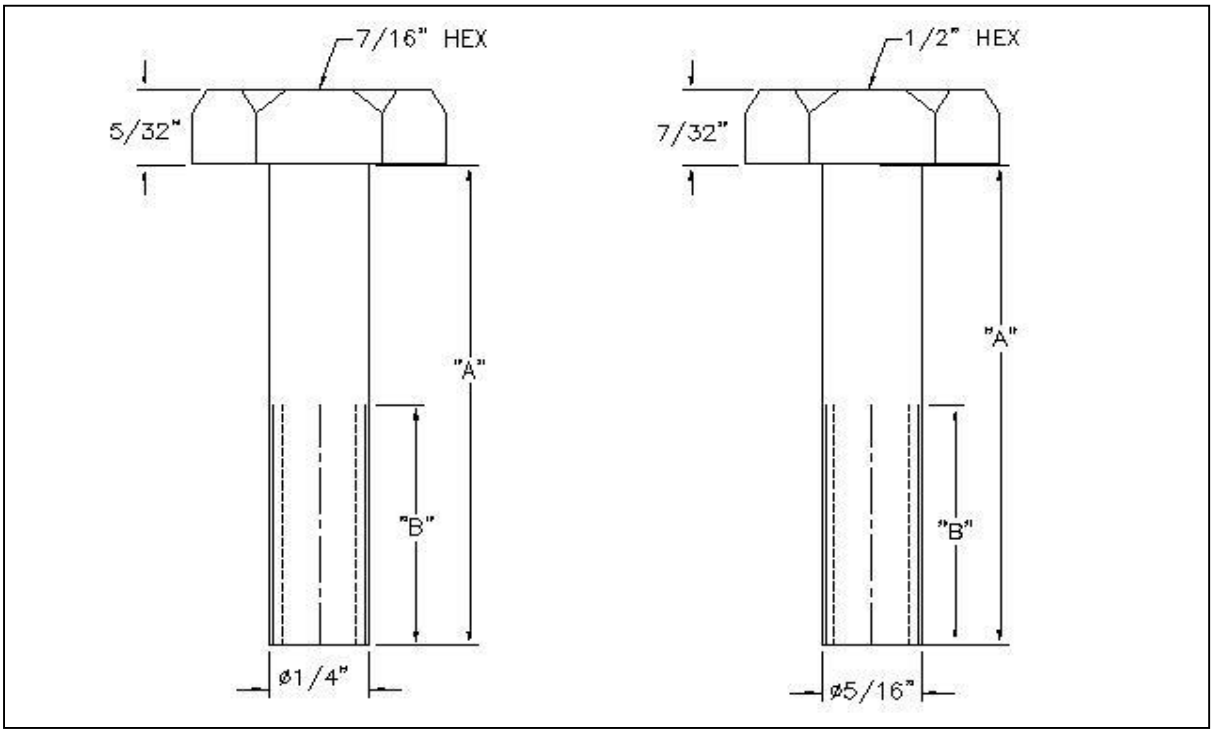

1/4-20 THREAD		
ITEM	"A"	"B"
HH0601	1/2"	FULL
HH0602	5/8"	FULL
HH0603	3/4"	FULL
HH0604	7/8"	3/4"
HH0605	1"	3/4"
HH0606	1 1/4"	3/4"
HH0607	1 1/2"	3/4"
HH0608	1 3/4"	3/4"
HH0609	2"	3/4"
HH0610	2 1/4"	3/4"
HH0611	2 1/2"	3/4"
HH0612	2 3/4"	3/4"
HH0613	3"	3/4"
HH0614	3 1/4"	3/4"
HH0615	3 1/2"	3/4"
HH0616	3 3/4"	3/4"
HH0617	4"	3/4"
HH0618	4 1/2"	3/4"
HH0619	5"	3/4"
HH0620	5 1/2"	3/4"
HH0621	6"	3/4"

5/16-18 THREAD		
ITEM	"A"	"B"
HH0801	1/2"	FULL
HH0802	5/8"	FULL
HH0803	3/4"	FULL
HH0804	7/8"	7/8"
HH0805	1"	7/8"
HH0806	1 1/4"	7/8"
HH0807	1 1/2"	7/8"
HH0808	1 3/4"	7/8"
HH0809	2"	7/8"
HH0810	2 1/4"	7/8"
HH0811	2 1/2"	7/8"
HH0812	2 3/4"	7/8"
HH0813	3"	7/8"
HH0814	3 1/4"	7/8"
HH0815	3 1/2"	7/8"
HH0816	3 3/4"	7/8"
HH0817	4"	7/8"
HH0818	4 1/2"	7/8"
HH0819	5"	7/8"
HH0820	5 1/2"	7/8"
HH0821	6"	7/8"

Specifications subject to change. Please contact CSF Customer Service for more information.

© copyright 2004 Central Steel Fabricators, Inc.
http://www.centralsteelfab.com ◆ 2100 Parkes Drive, Broadview, IL 60155
Phone: 708-652-2037 Fax: 708-652-7010

HH1000 – HH1100 Series - HEX HEAD CAP SCREW [GRADE 5]

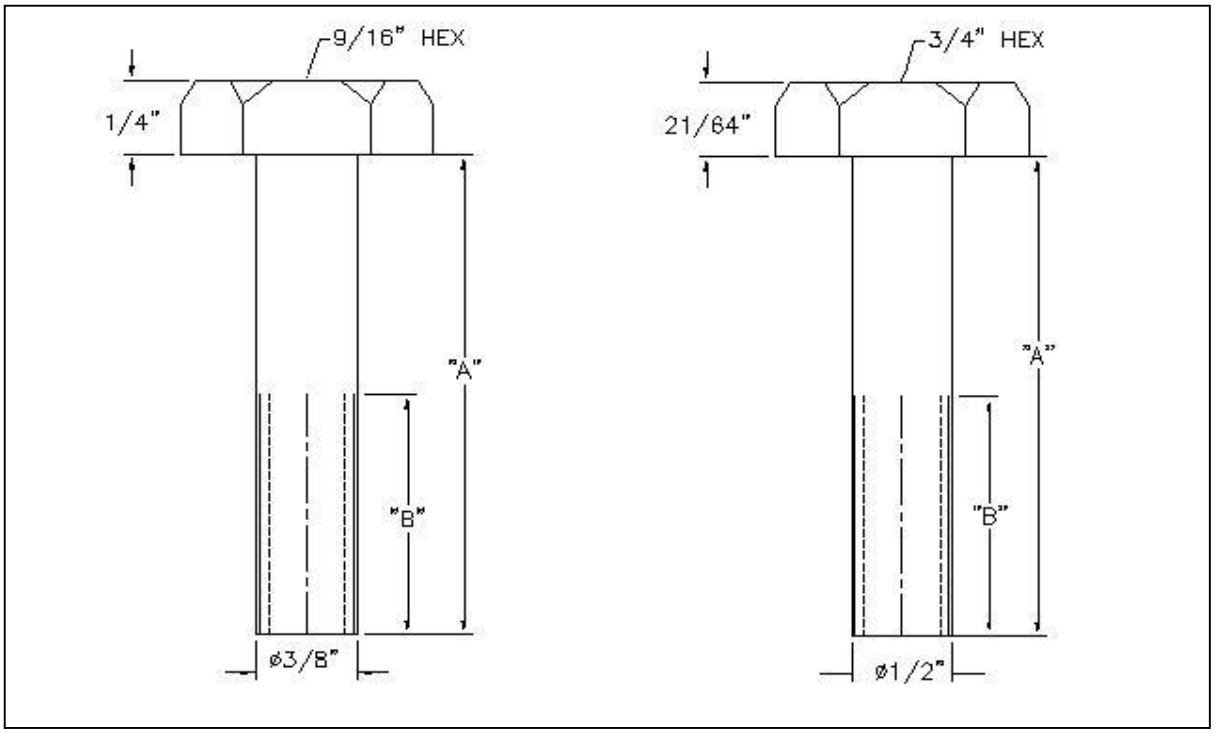

3/8-16 THREAD		
ITEM	"A"	"B"
HH1001	1/2"	FULL
HH1002	5/8"	FULL
HH1003	3/4"	FULL
HH1004	7/8"	FULL
HH1005	1"	FULL
HH1006	1 1/4"	1"
HH1007	1 1/2"	1"
HH1008	1 3/4"	1"
HH1009	2"	1"
HH1010	2 1/4"	1"
HH1011	2 1/2"	1"
HH1012	2 3/4"	1"
HH1013	3"	1"
HH1014	3 1/4"	1"
HH1015	3 1/2"	1"
HH1016	3 3/4"	1"
HH1017	4"	1"
HH1018	4 1/2"	1"
HH1019	5"	1"
HH1020	5 1/2"	1"
HH1021	6"	1"

1/2-13 THREAD		
ITEM	"A"	"B"
HH1101	3/4"	FULL
HH1102	7/8"	FULL
HH1103	1"	FULL
HH1104	1 1/4"	FULL
HH1105	1 1/2"	1 1/4"
HH1106	1 3/4"	1 1/4"
HH1107	2"	1 1/4"
HH1108	2 1/4"	1 1/4"
HH1109	2 1/2"	1 1/4"
HH1110	2 3/4"	1 1/4"
HH1111	3"	1 1/4"
HH1112	3 1/4"	1 1/4"
HH1113	3 1/2"	1 1/4"
HH1114	3 3/4"	1 1/4"
HH1115	4"	1 1/4"
HH1116	4 1/2"	1 1/4"
HH1117	5"	1 1/4"
HH1118	5 1/2"	1 1/4"
HH1119	6"	1 1/4"

Specifications subject to change. Please contact CSF Customer Service for more information.

© copyright 2004 Central Steel Fabricators, Inc.
http://www.centralsteelfab.com ◆ 2100 Parkes Drive, Broadview, IL 60155
Phone: 708-652-2037 Fax: 708-652-7010

HH1200 Series - HEX HEAD CAP SCREW [GRADE 5]

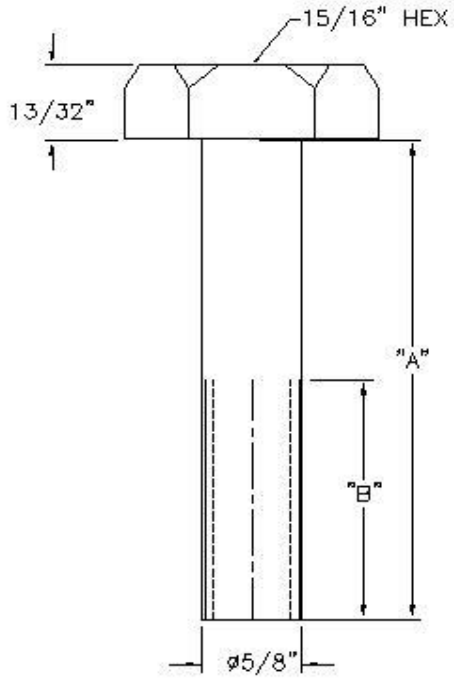

5/8-11UNC THREAD		
ITEM	"A"	"B"
HH1201	1"	FULL
HH1202	1 1/4"	FULL
HH1203	1 1/2"	FULL
HH1204	1 3/4"	FULL
HH1205	2"	1 1/4"
HH1206	2 1/4"	1 1/4"
HH1207	2 1/2"	1 1/4"
HH1208	2 3/4"	1 1/4"
HH1209	3"	1 1/4"
HH1210	3 1/4"	1 1/4"
HH1211	3 1/2"	1 1/4"
HH1212	3 3/4"	1 1/4"
HH1213	4"	1 1/4"
HH1214	4 1/2"	1 1/4"
HH1215	5"	1 1/4"
HH1216	5 1/2"	1 1/4"
HH1217	6"	1 1/4"

Specifications subject to change. Please contact CSF Customer Service for more information.

© copyright 2004 Central Steel Fabricators, Inc.
http://www.centralsteelfab.com ◆ 2100 Parkes Drive, Broadview, IL 60155
Phone: 708-652-2037 Fax: 708-652-7010

LS1300 Series 3/8" LAG SCREW

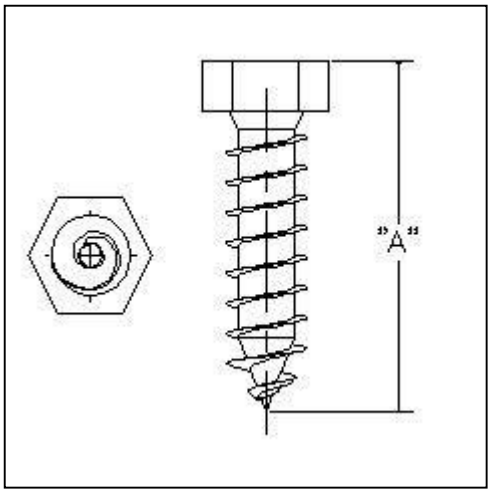

ITEM	"A"
LS1301	1"
LS1302	1 1/4"
LS1303	1 1/2"
LS1304	1 3/4"
LS1305	2"
LS1306	2 1/2"
LS1307	3"

FINISH: ZINC AND YELLOW

Specifications subject to change. Please contact CSF Customer Service for more information.
© copyright 2004 Central Steel Fabricators, Inc.
http://www.centralsteelfab.com ◆ 2100 Parkes Drive, Broadview, IL 60155
Phone: 708-652-2037 Fax: 708-652-7010

SP3700 Series STANDARD 1 INCH PIPE

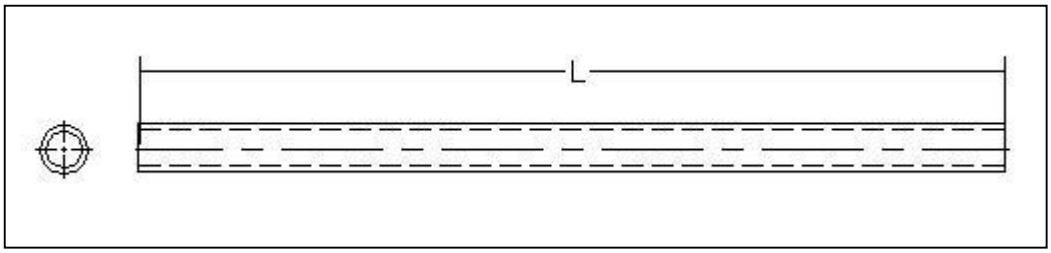

CSF #	LENGTH
SP3702	2 FT
SP3703	4 FT
SP3704	6 FT
SP3705	8 FT
SP3706	10 FT

FINISH: SEE TECH DATA FOR PAINT CODES

Specifications subject to change. Please contact CSF Customer Service for more information.
© copyright 2004 Central Steel Fabricators, Inc.
http://www.centralsteelfab.com ◆ 2100 Parkes Drive, Broadview, IL 60155 ◆
Phone: 708-652-2037 Fax: 708-652-7010

THP Series - Two Hole Plate

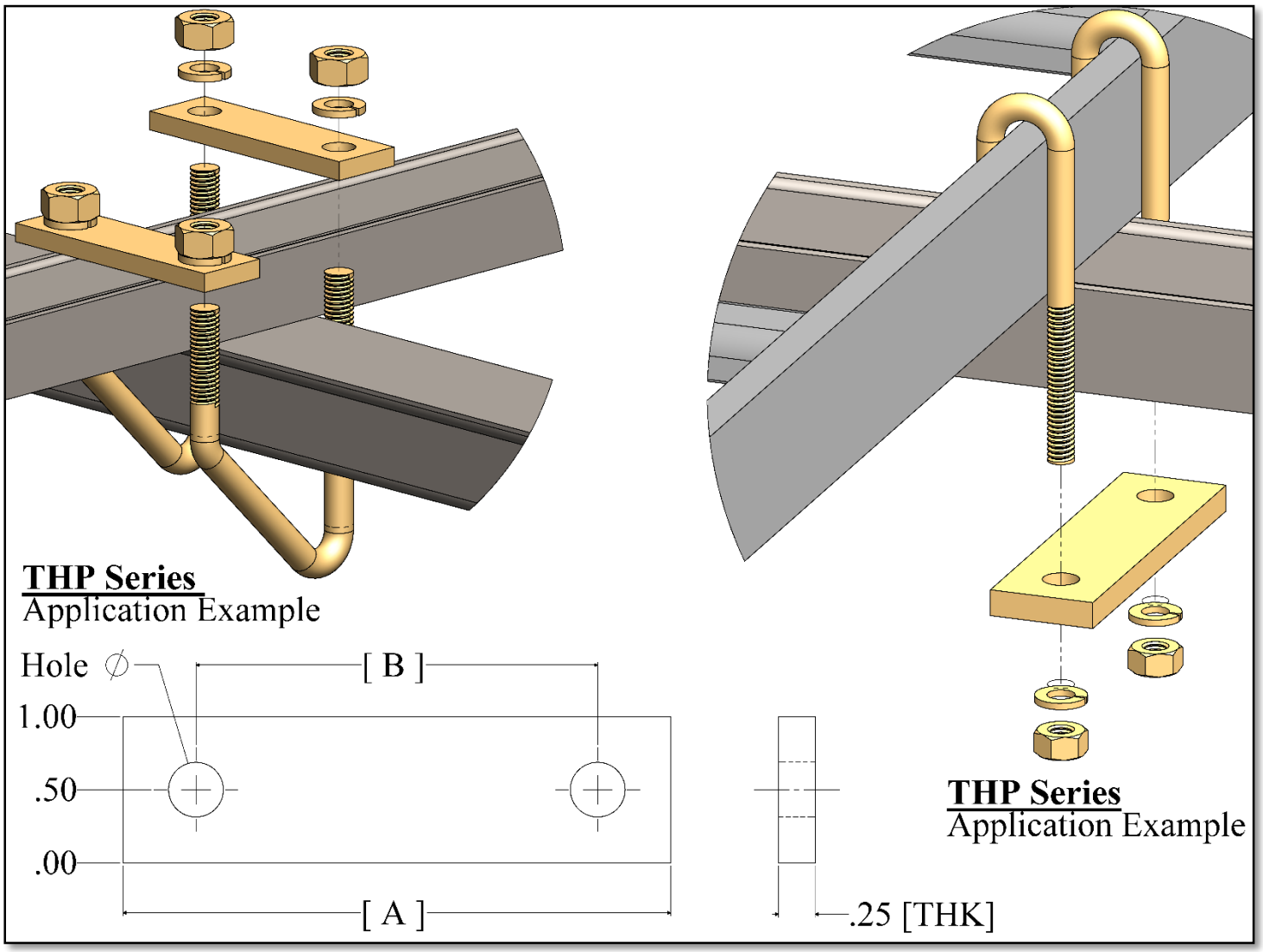

CSF#	Dim: [A]	Dim: [B]	Hole ∅
THP281	3.44”	2.44”	∅ .34”
THP282	3.44”	2.44”	∅ .44”
THP283	3.44”	2.66”	∅ .28”
THP284	3.88”	2.69”	∅ .69”
THP457	3.75”	2.75”	∅ .38”

Finish Code: Zinc and Yellow

RVSD*1117

Specifications subject to change. Please contact CSF Customer Service for more information.

© copyright 2004 Central Steel Fabricators, Inc.
http://www.centralsteelfab.com ◆ 2100 Parkes Drive, Broadview, IL 60155
Phone: 708-652-2037 Fax: 708-652-7010

TBA7600 Series TOGGLE BOLT ASSEMBLY

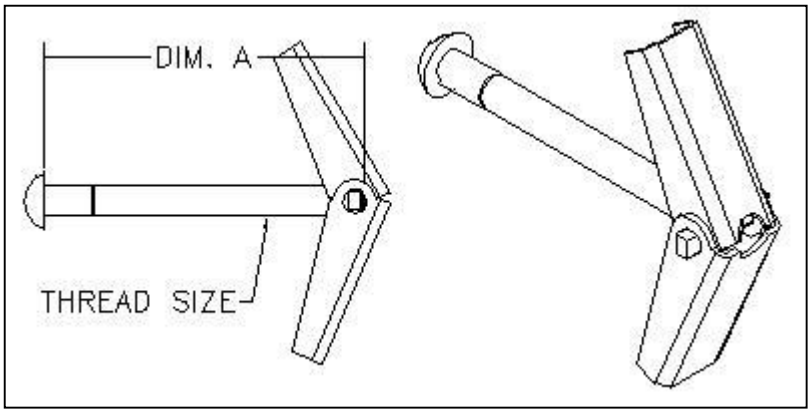

CSF#	"A"	THREAD
TBA7601	2"	10-242
TBA7602	3"	10-24
TBA7603	4"	10-24
TBA7604	3"	1/4"-20
TBA7605	4"	1/4"-20
TBA7606	3"	5/16"-18
TBA7607	4"	5/16"-18
TBA7608	3"	3/8"-16
TBA7609	4"	3/8"-16

Specifications subject to change. Please contact CSF Customer Service for more information.
© copyright 2004 Central Steel Fabricators, Inc.
http://www.centralsteelfab.com ◆ 2100 Parkes Drive, Broadview, IL 60155
Phone: 708-652-2037 Fax: 708-652-7010

US120 Series – 1.62" x 1.62" x 120.00" LG. – UNISTRUT - SOLID

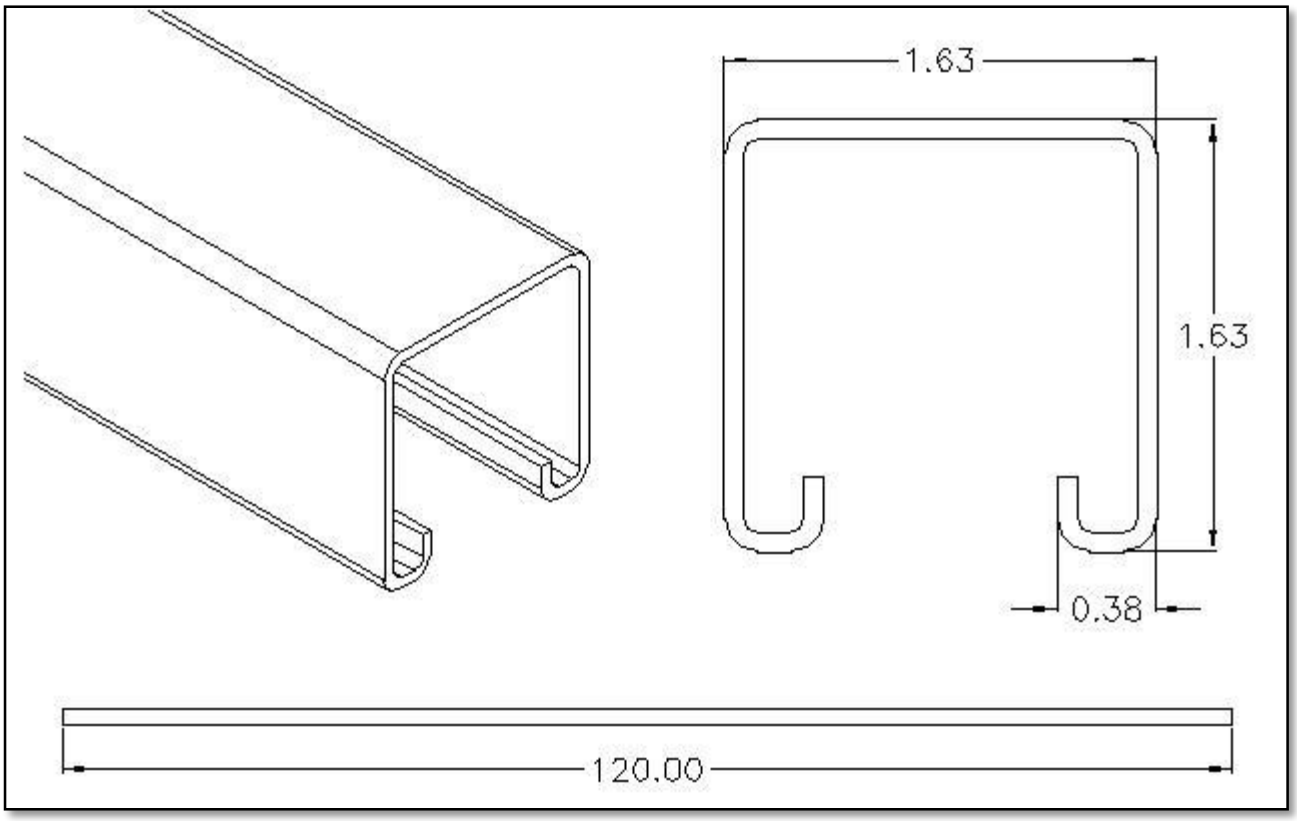

CSF#	FINISH
US120ZY	ZINC AND YELLOW
US120DG	TELEPHONE GREY
US120CB	CENTRAL OFFICE BLUE

NOTE:

OUTSIDE DIMENSIONS ARE MEASURED AT CORNERS AT LEAST 3.00" FROM THE CUT END OF THE SECTION, PER UNISTRUT SUPPLIER.

SOLID SIDES +/- .015
SLOTTED SIDES +/- .035

REFERENCE LINK ATTACHED: MEMBERS OF THE METAL FRAMING MANUFACTURES ASSOCIATION

http://www.metalframingmfg.org/

FINISHES: DG, ZY, GRN

- OTHER SIZES AND FINISHES AVAILABLE UPON REQUEST

RVSD*0415

Specifications subject to change. Please contact CSF Customer Service for more information.

© copyright 2004 Central Steel Fabricators, Inc.
http://www.centralsteelfab.com ◆ 2100 Parkes Drive, Broadview, IL 60155
Phone: 708-652-2037 Fax: 708-652-7010

US120H Series – 1.62" x .81" x 120.00" LG. – UNISTRUT - SOLID [LOW PROFILE]

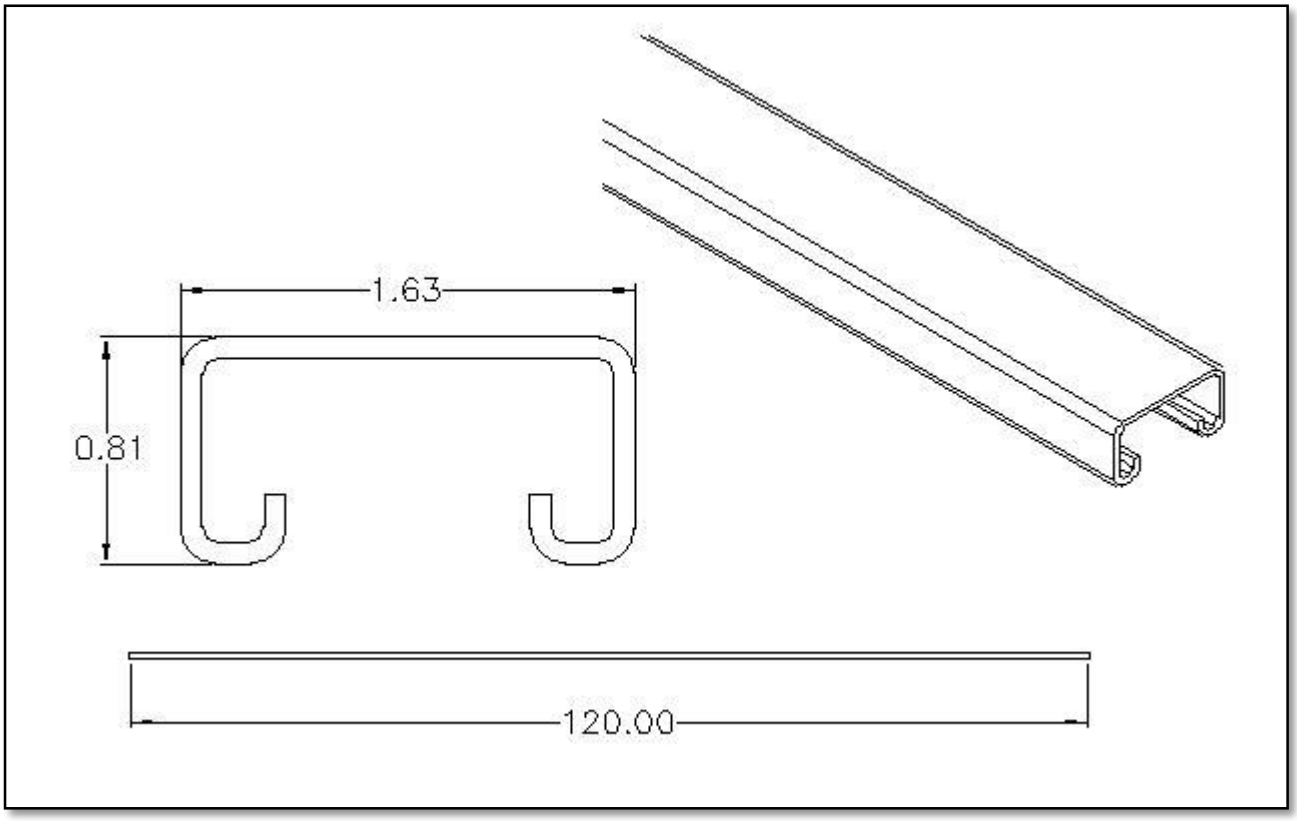

CSF#	FINISH
US120HZY	ZINC AND YELLOW
US120HDG	TELEPHONE GREY
US120HCB	CENTRAL OFFICE BLUE

NOTE:

OUTSIDE DIMENSIONS ARE MEASURED AT CORNERS AT LEAST 3.00" FROM THE CUT END OF THE SECTION, PER UNISTRUT SUPPLIER.

SOLID SIDES +/- .015
SLOTTED SIDES +/- .035

REFERENCE LINK ATTACHED: MEMBERS OF THE METAL FRAMING MANUFACTURES ASSOCIATION

http://www.metalframingmfg.org/

FINISHES: DG, ZY, GRN

- OTHER SIZES AND FINISHES AVAILABLE UPON REQUEST

Specifications subject to change. Please contact CSF Customer Service for more information.

© copyright 2004 Central Steel Fabricators, Inc.
http://www.centralsteelfab.com ◆ 2100 Parkes Drive, Broadview, IL 60155
Phone: 708-652-2037 Fax: 708-652-7010

UST120 – 1.62" x 1.62" x 120.00" LG. - UNISTRUT

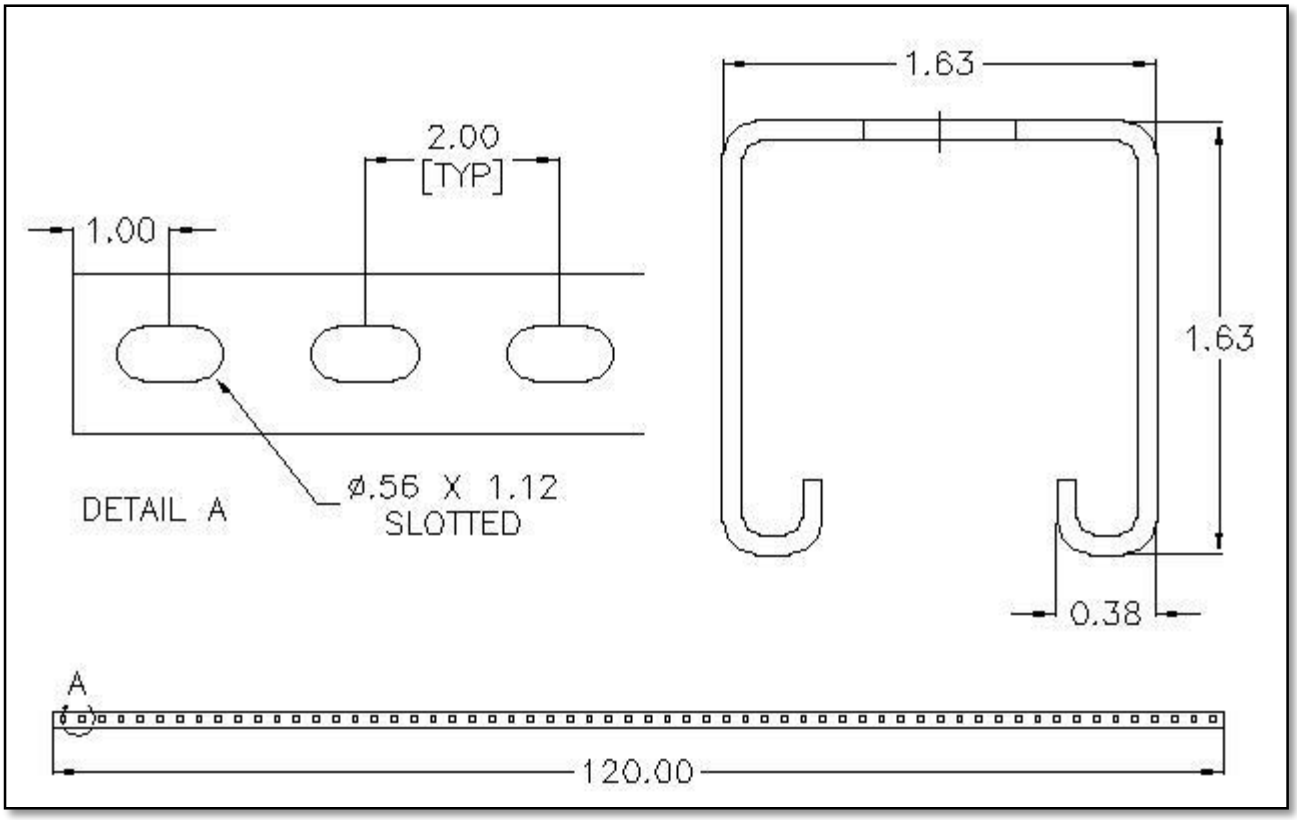

ITEM	CSF#	DESCRIPTION
1	UST120	1.62" x 1.62" x 120.00" LG. - UNISTRUT

NOTE:

OUTSIDE DIMENSIONS ARE MEASURED AT CORNERS AT LEAST 3.00" FROM THE CUT END OF THE SECTION, PER UNISTRUT SUPPLIER.

SOLID SIDES +/- .015
SLOTTED SIDES +/- .035

REFERENCE LINK ATTACHED: MEMBERS OF THE METAL FRAMING MANUFACTURES ASSOCIATION

http://www.metalframingmfg.org/

FINISHES: DG, ZY, GRN

- OTHER SIZES AND FINISHES AVAILABLE UPON REQUEST

RVSD*0415

Specifications subject to change. Please contact CSF Customer Service for more information.

© copyright 2004 Central Steel Fabricators, Inc.
http://www.centralsteelfab.com ◆ 2100 Parkes Drive, Broadview, IL 60155
Phone: 708-652-2037 Fax: 708-652-7010

UST120H – 1.62" x .81" x 120.00" LG. – LOW PROFILE

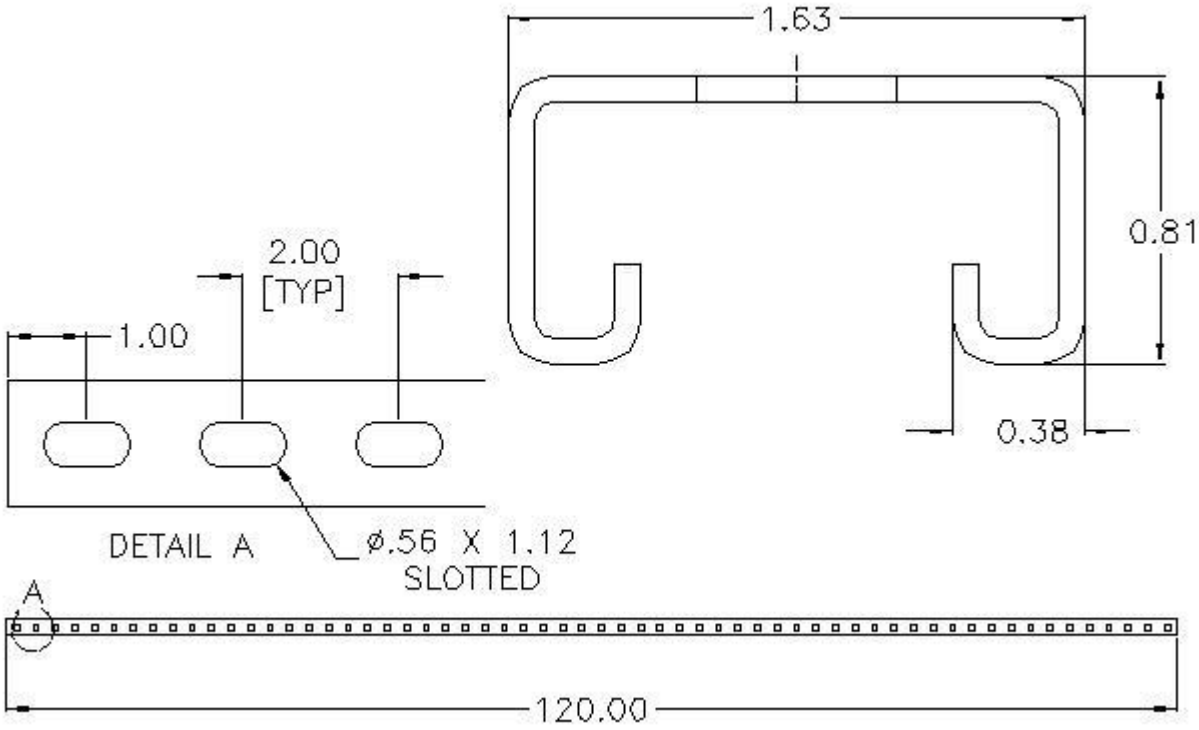

ITEM	CSF#	DESCRIPTION
1	UST120H	1.62" x .81" x 120.00" LG. UNISTRUT – LOW PROFILE

NOTE:

OUTSIDE DIMENSIONS ARE MEASURED AT CORNERS AT LEAST 3.00" FROM THE CUT END OF THE SECTION, PER UNISTRUT SUPPLIER.

SOLID SIDES +/- .015
SLOTTED SIDES +/- .035

REFERENCE LINK ATTACHED: MEMBERS OF THE METAL FRAMING MANUFACTURES ASSOCIATION

http://www.metalframingmfg.org/

FINISHES: DG, ZY, GRN

- OTHER SIZES AND FINISHES AVAILABLE UPON REQUEST

RVSD*0216

Specifications subject to change. Please contact CSF Customer Service for more information.

© copyright 2004 Central Steel Fabricators, Inc.
http://www.centralsteelfab.com ◆ 2100 Parkes Drive, Broadview, IL 60155
Phone: 708-652-2037 Fax: 708-652-7010

USN Series UNISTRUT SPRING NUT

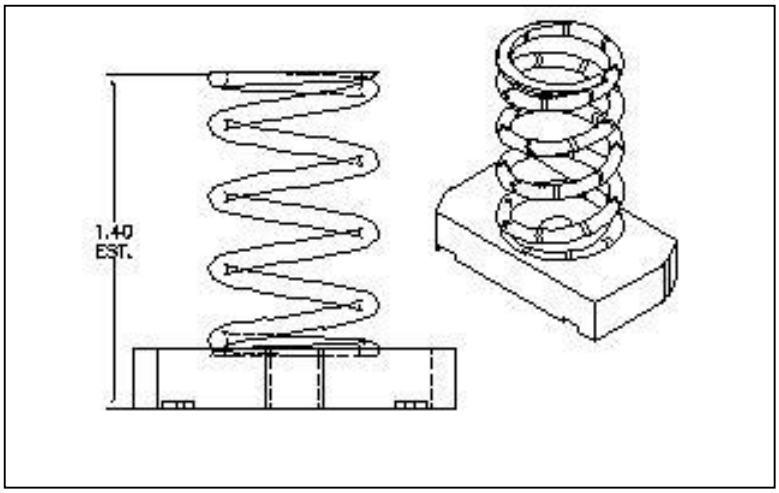

LONG SPRING	
CSF#	THREAD
USN25S	1/4"-20
USN37S	3/8"-16
USN50S	1/2"-13
USN62S	5/8"-11

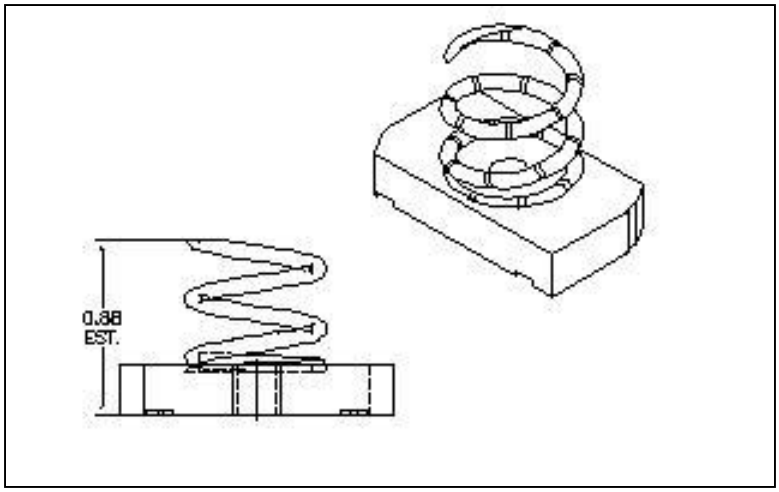

SHORT SPRING	
CSF#	THREAD
USN25H	1/4"-20
USN37H	3/8"-16
USN50H	1/2"-13
USN62H	5/8"-11

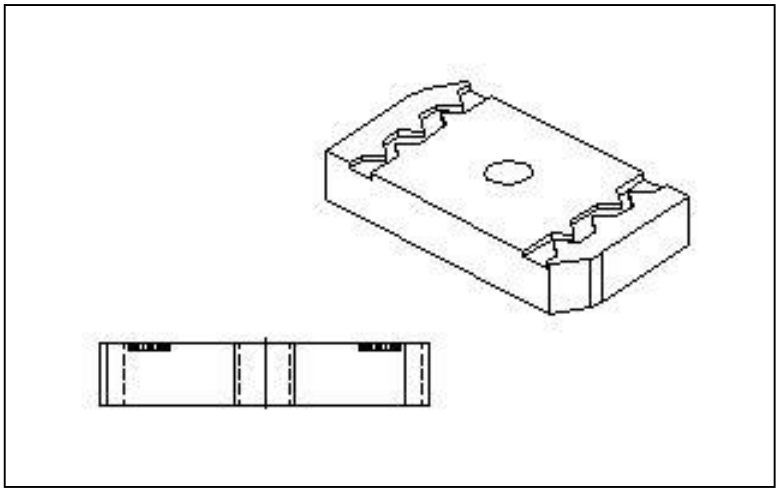

N/A SPRING	
CSF#	THREAD
USN25N	1/4"-20
USN37N	3/8"-16
USN50N	1/2"-13
USN62N	5/8"-11

Specifications subject to change. Please contact CSF Customer Service for more information.

© copyright 2004 Central Steel Fabricators, Inc.
http://www.centralsteelfab.com ◆ 2100 Parkes Drive, Broadview, IL 60155
Phone: 708-652-2037 Fax: 708-652-7010

UNISTRUT VINYL END CAP

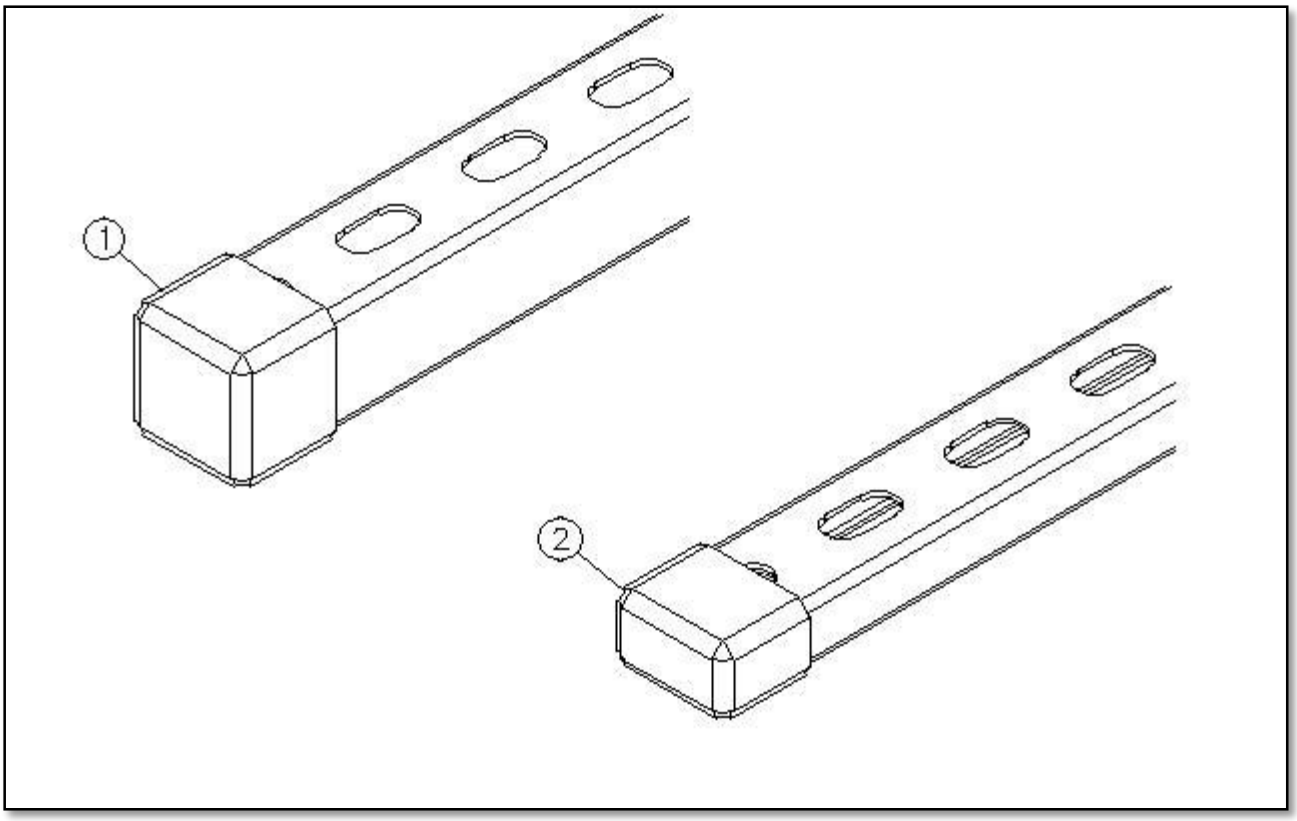

ITEM	CSF#	DESCRIPTION
1	PS2860 - 10	UNISTRUT VINTL END CAP - 1.62” x 1.62”
2	PS2860 - 33	UNISTRUT VINTL END CAP - 1.62” x .88”

RVSD*0415

Specifications subject to change. Please contact CSF Customer Service for more information.

© copyright 2004 Central Steel Fabricators, Inc.
http://www.centralsteelfab.com ◆ 2100 Parkes Drive, Broadview, IL 60155
Phone: 708-652-2037 Fax: 708-652-7010

UB Series U-BOLT

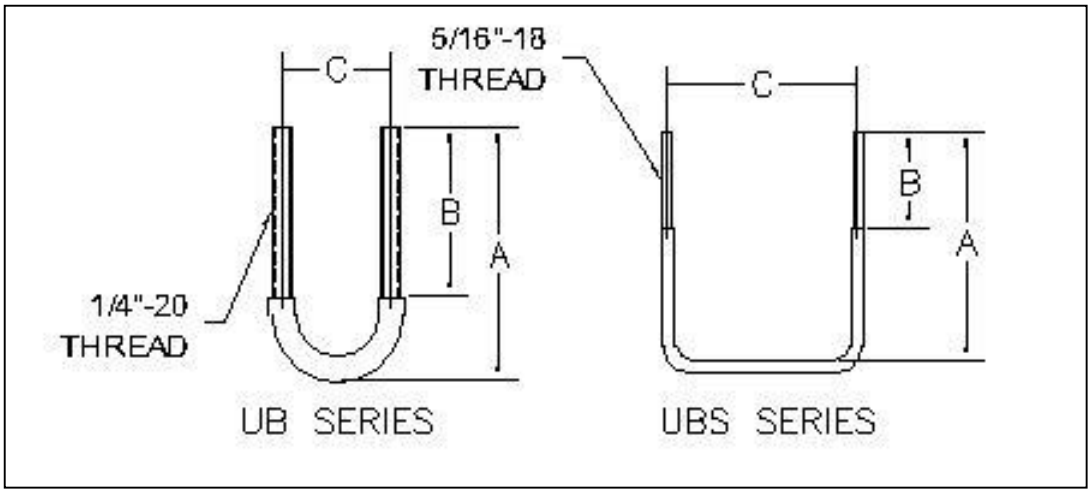

CSF#	"A"	"B"	"C"
UB431	2 3/8"	1 3/4"	1 1/4"
UB432	2 5/8"	1 3/4"	1 3/8"
UB433	2 7/8"	1 3/4"	1 5/8"
UBS4401	2 3/8"	1"	1 31/32"
UBS4402	3"	1"	1 31/32"
UBS4403	3 15/16"	2 1/2"	1 15/16"
UBS4404	4 1/4"	1 1/4"	2 11/16"
UBS4405	5 3/4"	1 1/4"	2 11/16"
UBS4406	3 1/4"	1 1/4"	2 3/4"
UBS4407	2 3/8"	1 1/4"	2 1/4"
UBS4408	1 1/4"	7/8"	1 15/16"

FINISH: ZINC AND YELLOW

Specifications subject to change. Please contact CSF Customer Service for more information.
© copyright 2004 Central Steel Fabricators, Inc.
http://www.centralsteelfab.com ◆ 2100 Parkes Drive, Broadview, IL 60155
Phone: 708-652-2037 Fax: 708-652-7010

VB Series V-BOLT

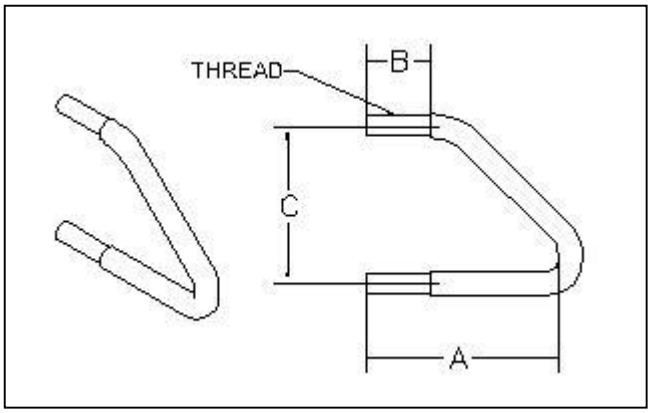

CSF#	"A"	"B"	"C"	THREAD
VB251	3"	1"	2 7/16"	3/8"-16
VB252	4"	1 1/4"	2 7/16"	3/8"-16
VB253	6"	1 1/2"	2 7/16"	3/8"-16
VB254	5"	1 1/2"	2 5/8"	1/2"-13
VB255	8"	2"	2 5/8"	1/2"-13
VB256	13"	10 3/4"	2 11/16"	5/8"-11

FINISH: ZINC AND YELLOW

Specifications subject to change. Please contact CSF Customer Service for more information.
© copyright 2004 Central Steel Fabricators, Inc.
http://www.centralsteelfab.com ◆ 2100 Parkes Drive, Broadview, IL 60155
Phone: 708-652-2037 Fax: 708-652-7010

WALL ANGLES

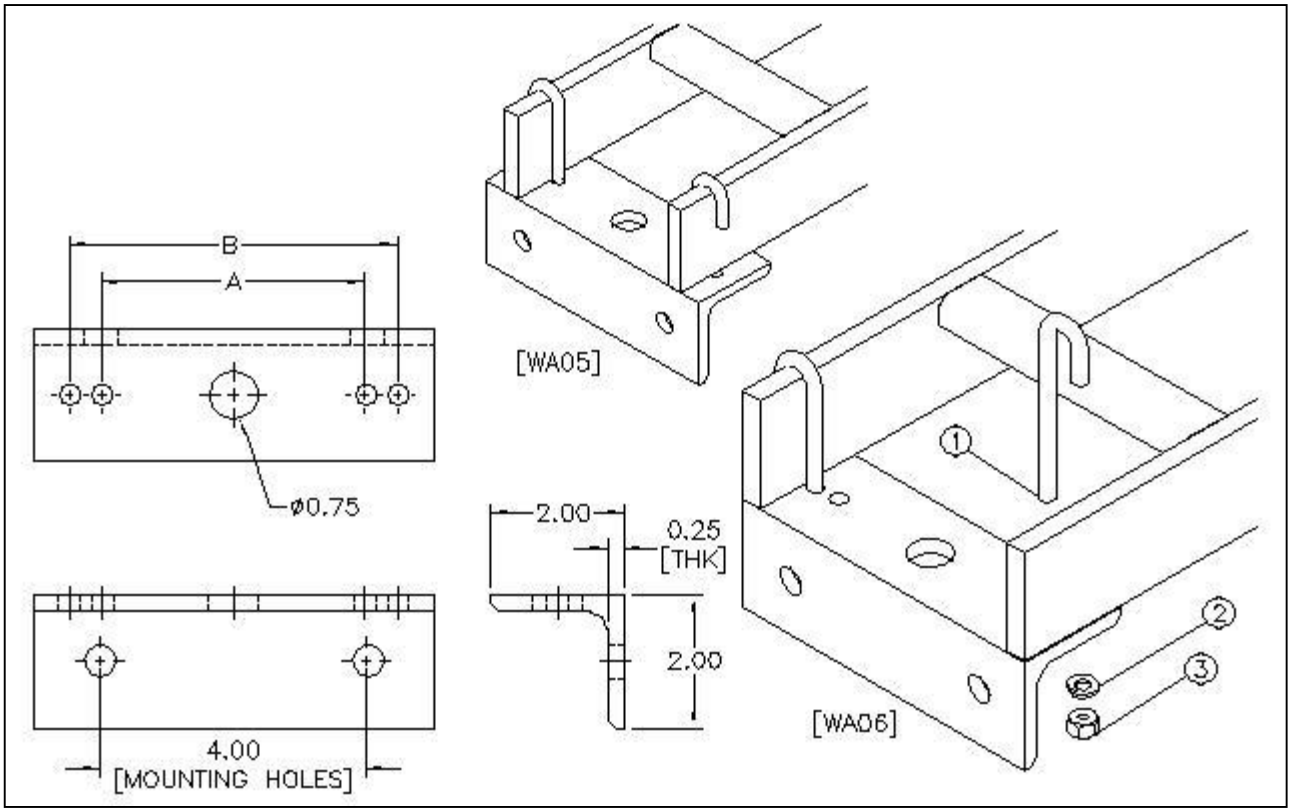

CSF#	"A"	"B"
WA05	4.00"	5.00"
WA06	4.00"	5.00"

1.50" STRINGER (K1)		
ITEM	CSF#	JBA4201
1	JB243	2
2	LW154	2
3	HN144	2

2.00" STRINGER (K2)		
ITEM	CSF#	JBA4202
1	JB242	2
2	LW154	2
3	HN144	2

NOTES:
-ADD K1 OR K2 TO ITEM TO INCLUDE J-BOLT KIT
-FINISH: SEE TECH DATA FOR PAINT CODES
-CABLE RACK NOT INCLUDED

Specifications subject to change. Please contact CSF Customer Service for more information.
© copyright 2004 Central Steel Fabricators, Inc.
http://www.centralsteelfab.com ◆ 2100 Parkes Drive, Broadview, IL 60155
Phone: 708-652-2037 Fax: 708-652-7010

WALL ANGLES

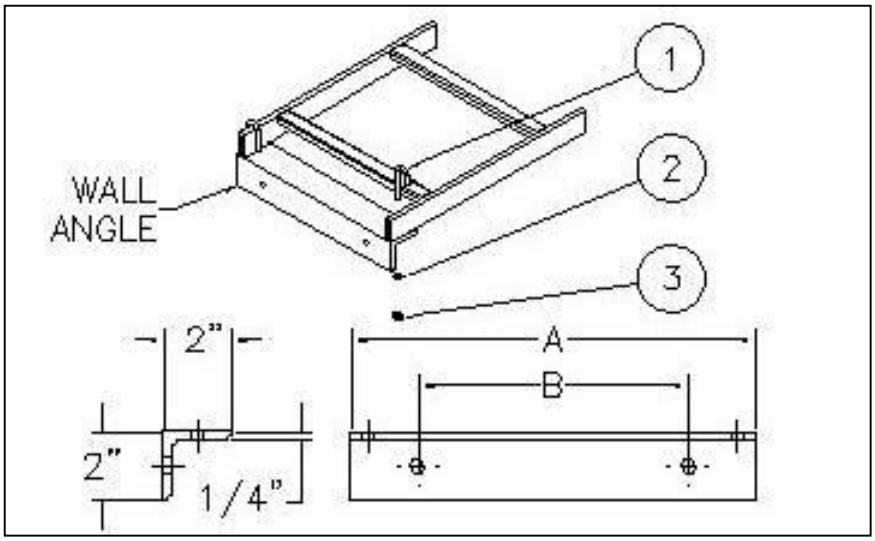

CSF#	"A"	"B"
WA10	10.00"	6.00"
WA11	11.00"	7.00"
WA12	12.00"	8.00"
WA15	15.00"	11.00"
WA18	18.00"	12.00"
WA20	20.00"	14.00"
WA24	24.00"	18.00"
WA25	25.00"	19.00"
WA30	30.00"	24.00"
WA36	36.00"	30.00"

NOTES:

-ADD K1 OR K2 TO ITEM TO INCLUDE J-BOLT KIT i.e.: WA25K01

-FINISH: SEE TECH DATA FOR PAINT CODES

-CABLE RACK NOT INCLUDED

1.50" STRINGER (K1)		
ITEM	CSF#	JBA4201
1	JB243	2
2	LW154	2
3	HN144	2

2.00" STRINGER (K2)		
ITEM	CSF#	JBA4202
1	JB242	2
2	LW154	2
3	HN144	2

Specifications subject to change. Please contact CSF Customer Service for more information.

© copyright 2004 Central Steel Fabricators, Inc.
http://www.centralsteelfab.com ◆ 2100 Parkes Drive, Broadview, IL 60155
Phone: 708-652-2037 Fax: 708-652-7010

LWI150 Series INTERNAL TOOTH LOCK WASHER

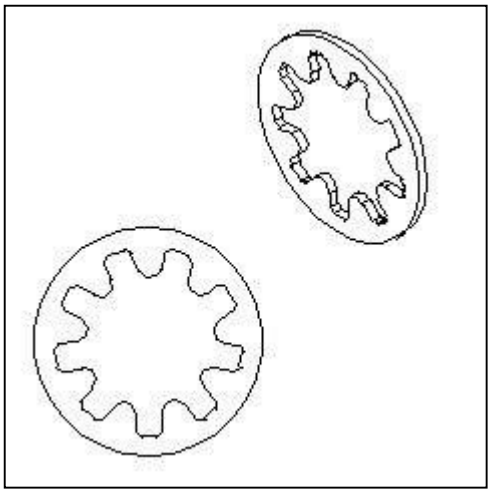

CSF#	A
LWI153	#12
LWI154	1/4"
LWI155	5/16"
LWI156	3/8"
LWI157	1/2"
LWI158	5/8"

FINISH: ZINC AND YELLOW

Specifications subject to change. Please contact CSF Customer Service for more information.
© copyright 2004 Central Steel Fabricators, Inc.
http://www.centralsteelfab.com ◆ 2100 Parkes Drive, Broadview, IL 60155
Phone: 708-652-2037 Fax: 708-652-7010

LWE15x Series – External Tooth Lock Washer

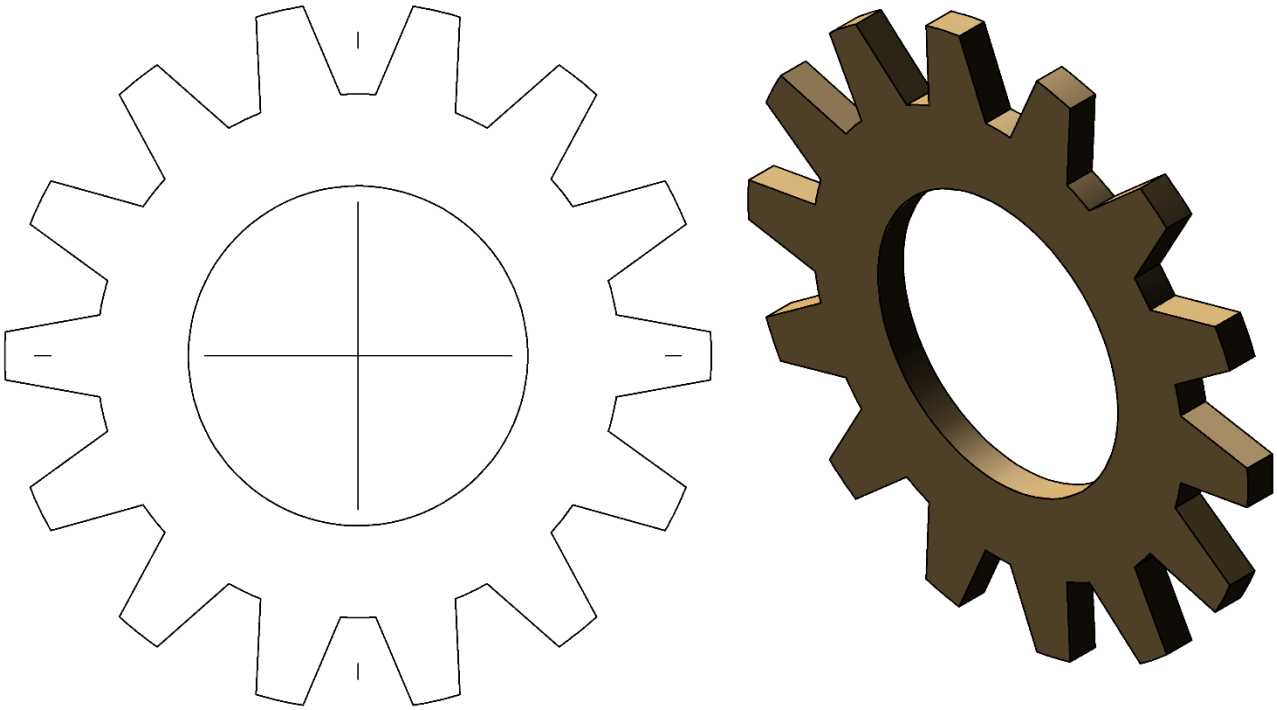

CSF#	Description
LWE151	#8 External tooth Lock Washer - ZY
LWE152	#10 External tooth Lock Washer - ZY
LWE153	#12 External tooth Lock Washer - ZY
LWE154	1/4" External tooth Lock Washer - ZY
LWE155	5/16" External tooth Lock Washer - ZY
LWE156	3/8" External tooth Lock Washer - ZY
LWE157	1/2" External tooth Lock Washer - ZY
LWE158	5/8" External tooth Lock Washer - ZY

Finish Code: Zinc and Yellow

RVSD*0417

Specifications subject to change. Please contact CSF Customer Service for more information.

© copyright 2004 Central Steel Fabricators, Inc.
http://www.centralsteelfab.com ◆ 2100 Parkes Drive, Broadview, IL 60155
Phone: 708-652-2037 Fax: 708-652-7010

LW150 Series LOCK WASHER

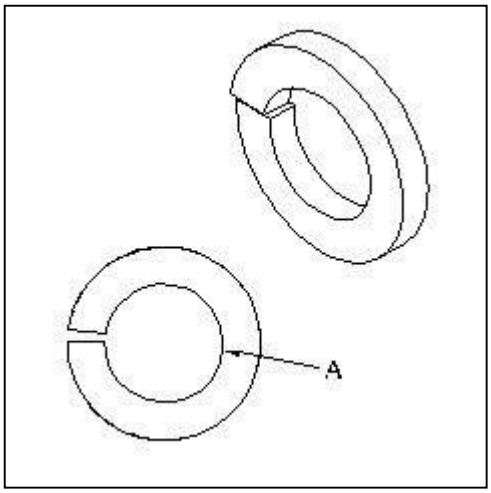

CSF#	A
LW151	#8
LW152	#10
LW153	#12
LW154	1/4"
LW155	5/16"
LW156	3/8"
LW157	1/2"
LW158	5/8"

FINISH: ZINC AND YELLOW

Specifications subject to change. Please contact CSF Customer Service for more information.
© copyright 2004 Central Steel Fabricators, Inc.
http://www.centralsteelfab.com ◆ 2100 Parkes Drive, Broadview, IL 60155
Phone: 708-652-2037 Fax: 708-652-7010

SW Series SQUARE WASHER

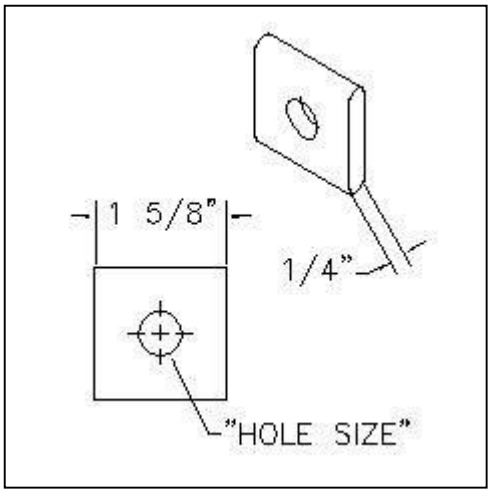

CSF#	HOLE SIZE
SW25	5/16"
SW37	7/16"
SW50	9/16"
SW62	11/16"

FINISH: ZINC AND YELLOW

Specifications subject to change. Please contact CSF Customer Service for more information.
© copyright 2004 Central Steel Fabricators, Inc.
http://www.centralsteelfab.com ◆ 2100 Parkes Drive, Broadview, IL 60155
Phone: 708-652-2037 Fax: 708-652-7010

FW Series FLAT WASHER

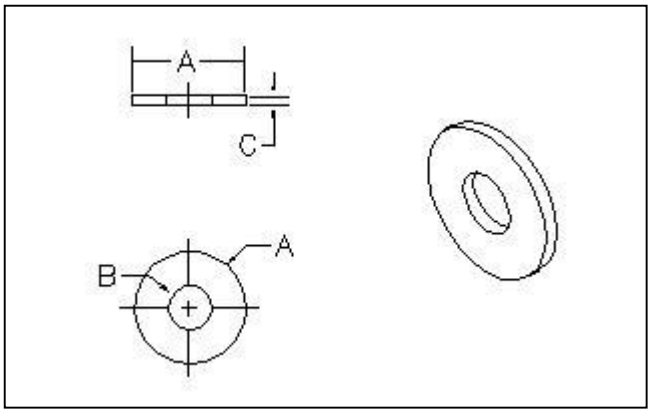

CSF#	"A"	"B"	"C"
FW161	7/16"	3/16"	3/64"
FW162	1/2"	7/32"	3/64"
FW163	9/16"	1/4"	5/64"
FW164	3/4"	19/64"	5/64"
FW165	7/8"	7/32"	5/64"
FW166	1"	13/32"	5/64"
FW167	1 1/4"	9/16"	7/64"
FW168	1 3/4"	11/16"	1/8"

Specifications subject to change. Please contact CSF Customer Service for more information.
© copyright 2004 Central Steel Fabricators, Inc.
http://www.centralsteelfab.com ◆ 2100 Parkes Drive, Broadview, IL 60155
Phone: 708-652-2037 Fax: 708-652-7010

CABLE BRACKETS

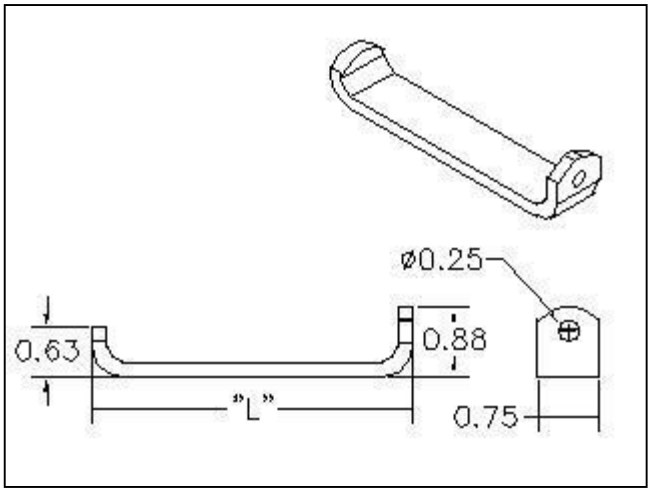

CSF#	" L" LENGTH
CAB4101XX	2.00"
CAB4102XX	3.00"
CAB4103XX	4.00"
CAB4104XX	5.00"
CAB4105XX	6.00"
CAB4107XX	8.00"

NOTES:
- KIT INCLUDES ALL MOUNTING HARDWARE
- OTHER SIZES AND FINISHES AVAILABLE UPON REQUEST

Specifications subject to change. Please contact CSF Customer Service for more information.

© copyright 2004 Central Steel Fabricators, Inc.
http://www.centralsteelfab.com ◆ 2100 Parkes Drive, Broadview, IL 60155
Phone: 708-652-2037 Fax: 708-652-7010

CABLE BRACKETS

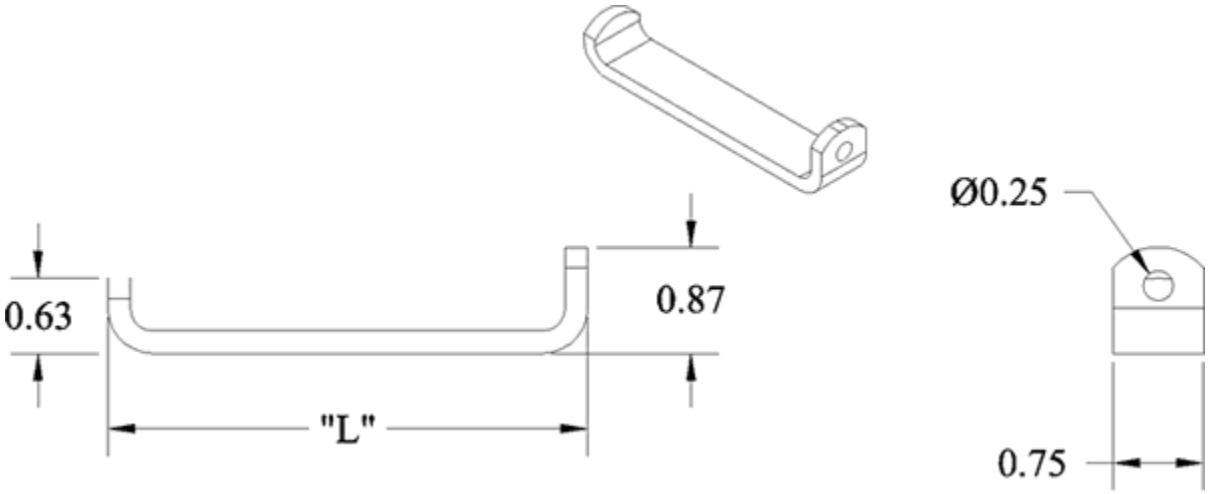

CABLE BRACKETS

"L" LENGTH	PART #
2"	CAB4101_ _
3"	CAB4102_ _
4"	CAB4103_ _
5"	CAB4104_ _
6"	CAB4105_ _
7"	CAB4106_ _
8"	CAB4107_ _

Other sizes and finishes available on request

FINISH SUFFIX	FINISH
CB	CENTRAL OFFICE BLUE
DG	DARK GRAY
PW	PUTTY WHITE
ZY	ZINC DICHROMATE

Kit Includes all Mounting Hardware & Cable Bracket

Specifications subject to change. Please contact CSF Customer Service for more information.

© copyright 2004 Central Steel Fabricators, Inc.
http://www.centralsteelfab.com ◆ 2100 Parkes Drive, Broadview, IL 60155
Phone: 708-652-2037 Fax: 708-652-7010

CAB0608ZY CABLE BRACKET

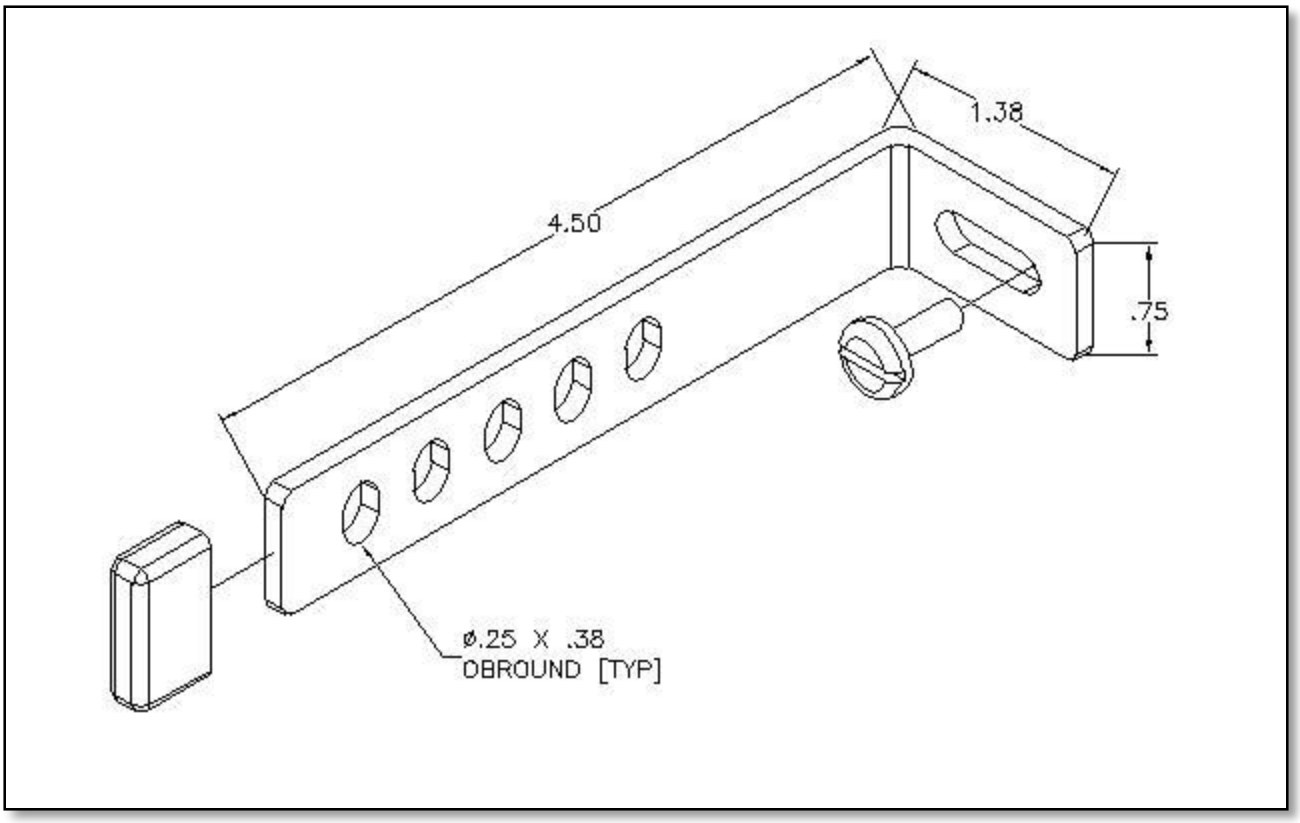

NOTES:
- KIT INCLUDES ALL MOUNTING HARDWARE
- INCLUDES A CAP
- FINISH: ZINC AND YELLOW
- OTHER SIZES AND FINISHES AVAILABLE UPON REQUEST

RVSD*0712

Specifications subject to change. Please contact CSF Customer Service for more information.

© copyright 2004 Central Steel Fabricators, Inc.
http://www.centralsteelfab.com ◆ 2100 Parkes Drive, Broadview, IL 60155
Phone: 708-652-2037 Fax: 708-652-7010

ECXXX END CAP FOR THREADED ROD

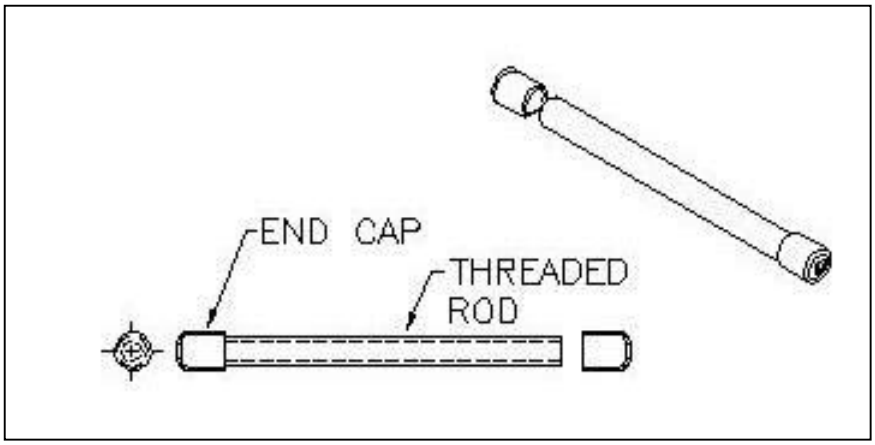

ECXXX END CAP	
CSF #	THREADED ROD SIZE
EC375	3/8" -16
EC500	1/2" -13
EC875	5/8" -11

NOTES:
- ONE END CAP PER PACKAGE
- FINISH: BLACK
- THREADED ROD NOT INCLUDED

Specifications subject to change. Please contact CSF Customer Service for more information.
© copyright 2004 Central Steel Fabricators, Inc.
http://www.centralsteelfab.com ◆ 2100 Parkes Drive, Broadview, IL 60155
Phone: 708-652-2037 Fax: 708-652-7010

END CAP FOR THREADED ROD

EC375-EC875	
CSF #	THREAD
EC375	3/8"-16
EC500	1/2"-13
EC875	5/8"-11

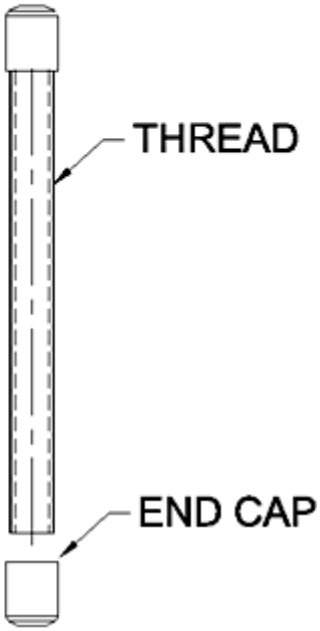

Specifications subject to change. Please contact CSF Customer Service for more information.
© copyright 2004 Central Steel Fabricators, Inc.
http://www.centralsteelfab.com ◆ 2100 Parkes Drive, Broadview, IL 60155
Phone: 708-652-2037 Fax: 708-652-7010

RFS013XZYK – Rack Floor Shim Kits

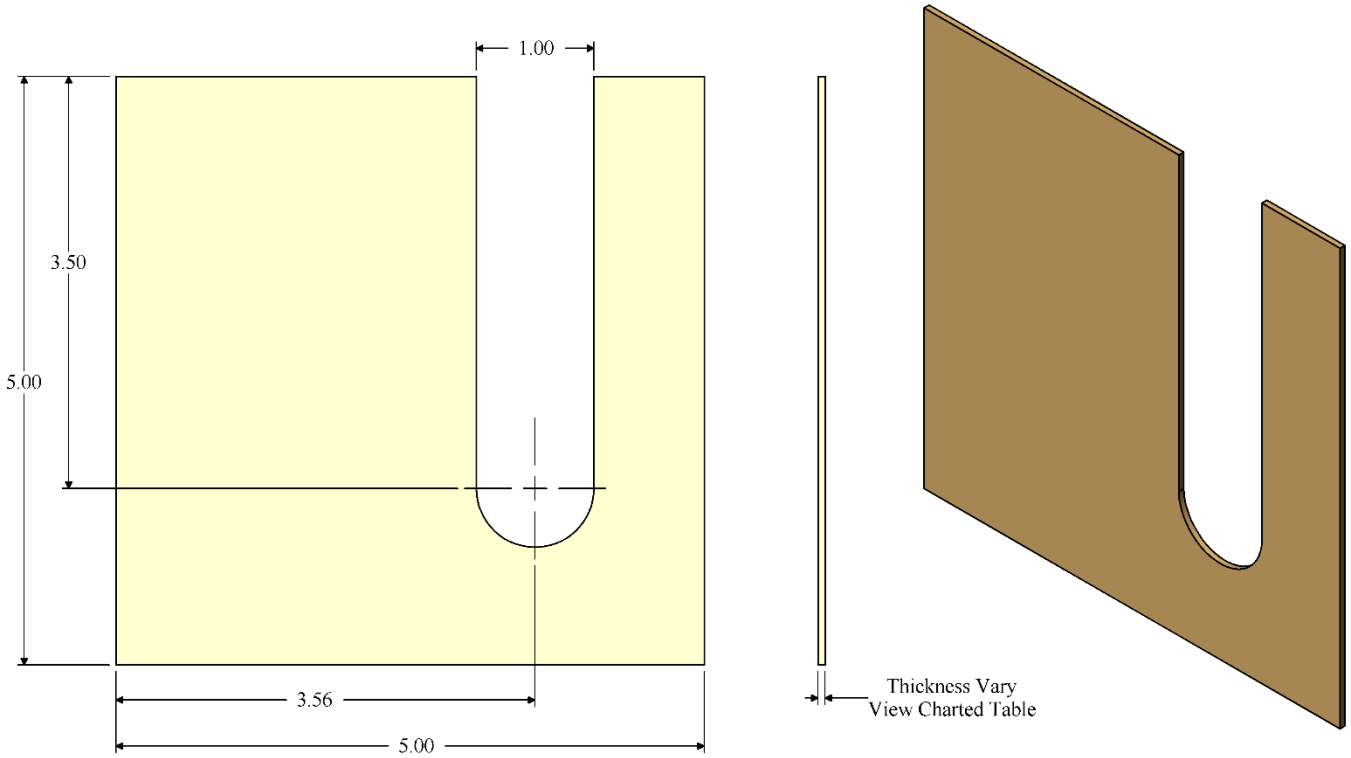

RFS0131ZYK – Rack Floor Shim Kit			
Item	CSF#	Description	QTY
1	RFS0132-03	Rack Floor Shim – [.03” THK] – ZY	4
2	RFS0132-06	Rack Floor Shim – [.06” THK] – ZY	2
3	RFS0132-12	Rack Floor Shim – [.12” THK] – ZY	1

RFS0132ZYK – Rack Floor Shim Kit			
Item	CSF#	Description	QTY
1	RFS0132-03	Rack Floor Shim – [.03” THK] – ZY	4
2	RFS0132-06	Rack Floor Shim – [.06” THK] – ZY	2
3	RFS0132-12	Rack Floor Shim – [.12” THK] – ZY	2
4	RFS0132-25	Rack Floor Shim – [.25” THK] - ZY	2

Specifications subject to change. Please contact CSF Customer Service for more information.

© copyright 2004 Central Steel Fabricators, Inc.
http://www.centralsteelfab.com ◆ 2100 Parkes Drive, Broadview, IL 60155
Phone: 708-652-2037 Fax: 708-652-7010

RFS06ZYK – Rack Floor Shim Kit

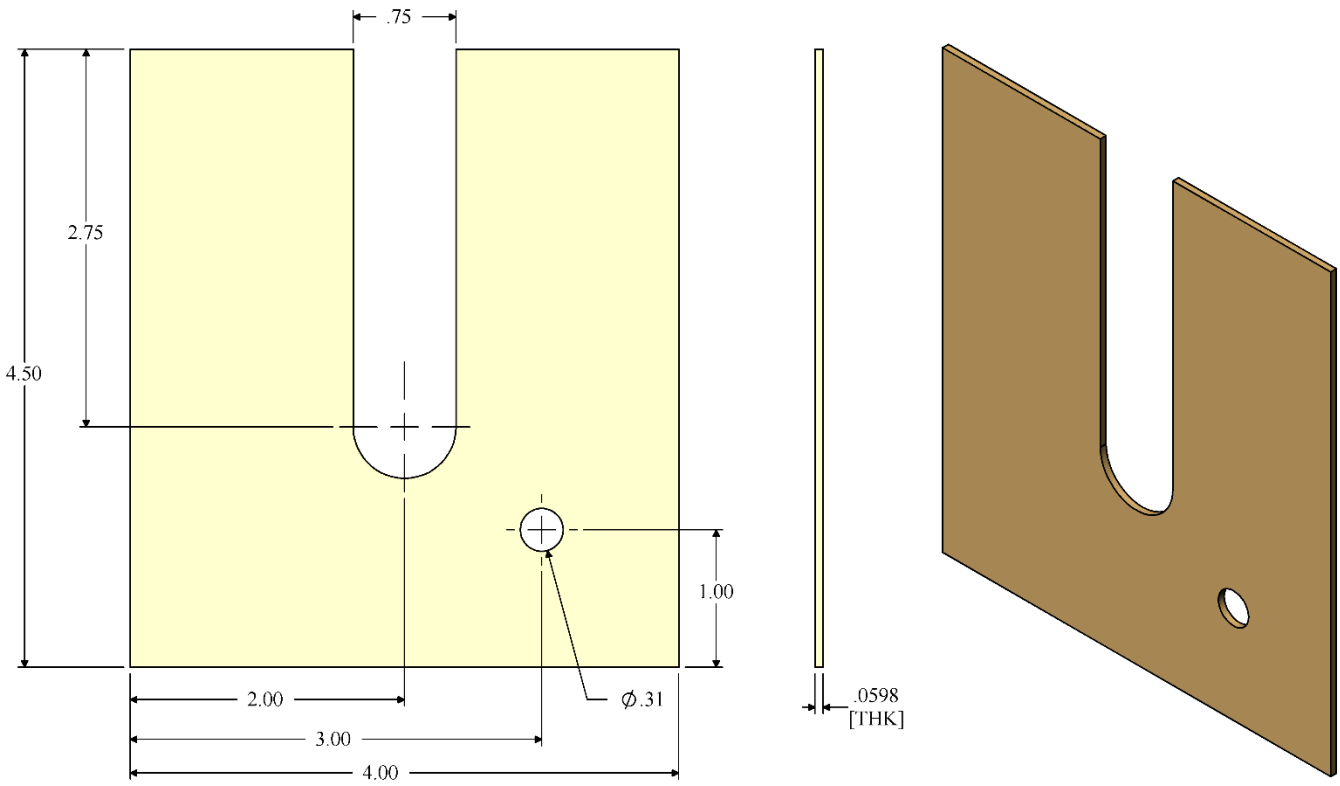

RFS06ZYK – Rack Floor Shim Kit			
Item	CSF#	Description	QTY
1	RFS06i	Rack Floor Shim – [.06" THK] – ZY	4

Specifications subject to change. Please contact CSF Customer Service for more information.
© copyright 2004 Central Steel Fabricators, Inc.
http://www.centralsteelfab.com ◆ 2100 Parkes Drive, Broadview, IL 60155
Phone: 708-652-2037 Fax: 708-652-7010

FSXXDGK01 – Framing Support Angle

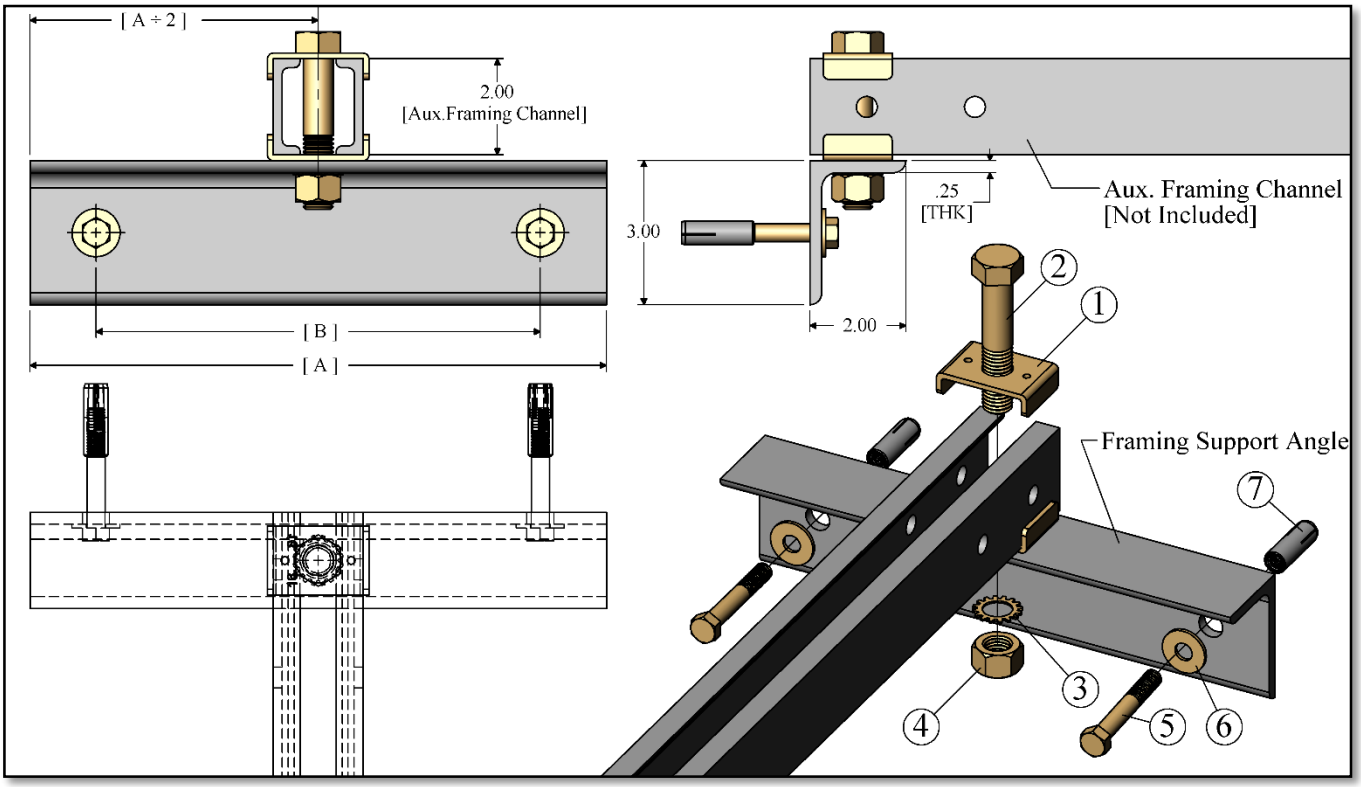

FSXXDGK01 – Framing Support Angle DG Kit01			
CSF#	[A]	[B]	Description
FS06DGK01	6.00″	3.25	Framing Support Kit with 6.00″ Angle DG
FS12DGK01	12.00″	9.25″	Framing Support Kit with 12.00″ Angle DG
FS18DGK01	18.00″	15.25″	Framing Support Kit with 18.00″ Angle DG

FSXXDGK01 – Hardware Kit [B.O.M.]			
Item	CSF#	Description	QTY
1	FC316	Framing Clip	2
2	HH1210	5/8-11 HHCS x 3.25″ LG. – ZY	1
3	LWE158	5/8 External Tooth Lock Washer	1
4	HN148	5/8-11 Hex Nut - ZY	1
5	HH1011	3/8-16 HHCS x 2.50″ LG. - ZY	2
6	FW166	3/8 Flat Washer - ZY	2
7	DIA37	3/8-16 x 1.60″ LG. - Drop In Anchor	2

Notes:
- FSXXDGK01 can be assemble using Auxiliary Framing Channel or Auxiliary Framing Bar.
- Other Sizes and Finishes available upon request.

RVSD*0217

Specifications subject to change. Please contact CSF Customer Service for more information.

© copyright 2004 Central Steel Fabricators, Inc.
http://www.centralsteelfab.com ◆ 2100 Parkes Drive, Broadview, IL 60155
Phone: 708-652-2037 Fax: 708-652-7010

FRAMING SUPPORT ANGLE

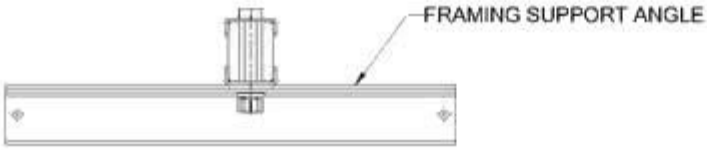

FS06-FS18	
CSF #	LENGTH
FS06_ _	6"
FS12_ _	12"
FS18_ _	18"

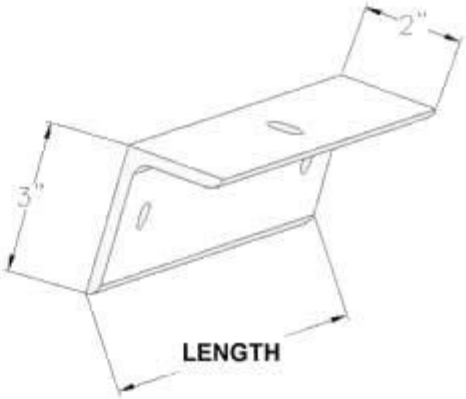

OTHER FINISHES	POWDER COAT PAINT FINISH
D G	DARK GRAY
P W	PUTTY WHITE
N W	NETWORK WHITE

MATERIAL: 2" X 3" 1/4"

Specifications subject to change. Please contact CSF Customer Service for more information.

© copyright 2004 Central Steel Fabricators, Inc.
http://www.centralsteelfab.com ◆ 2100 Parkes Drive, Broadview, IL 60155
Phone: 708-652-2037 Fax: 708-652-7010

ATTACH AUX. CHANNEL & CABLE RACK TO TOP ANGLE W/PLATE

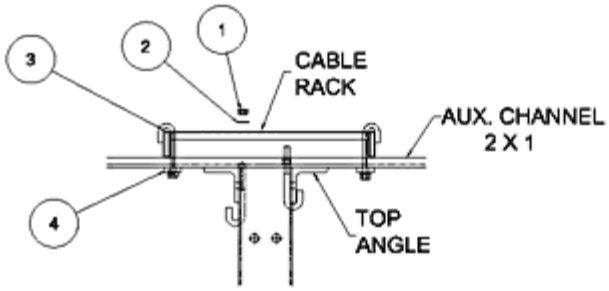

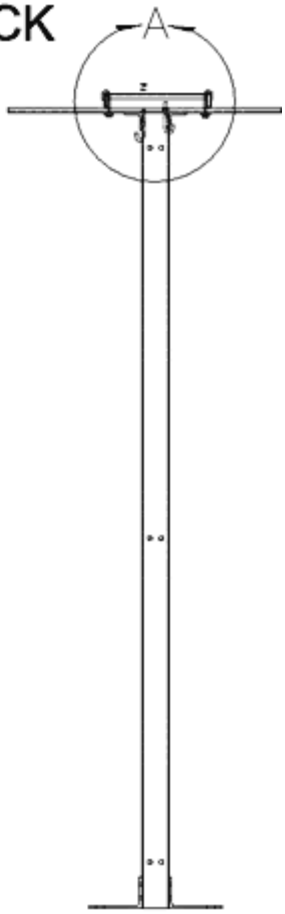

JBA4101-JBA4102			
ITEM #	CSF #	JBA4101 (1 1/2" STRINGER)	JBA4102 (2" STRINGER)
1	HN144	4	0
1	HN145	4	8
2	LW154	4	0
2	LW155	4	8
3	JB242	4	0
3	JB244	4	8
4	THP281	4	4

FINISH: ZINC DICHROMATE

Specifications subject to change. Please contact CSF Customer Service for more information.
© copyright 2004 Central Steel Fabricators, Inc.
http://www.centralsteelfab.com ◆ 2100 Parkes Drive, Broadview, IL 60155
Phone: 708-652-2037 Fax: 708-652-7010

JBA42XX ATTACH CABLE RACK TO WALL ANGLE

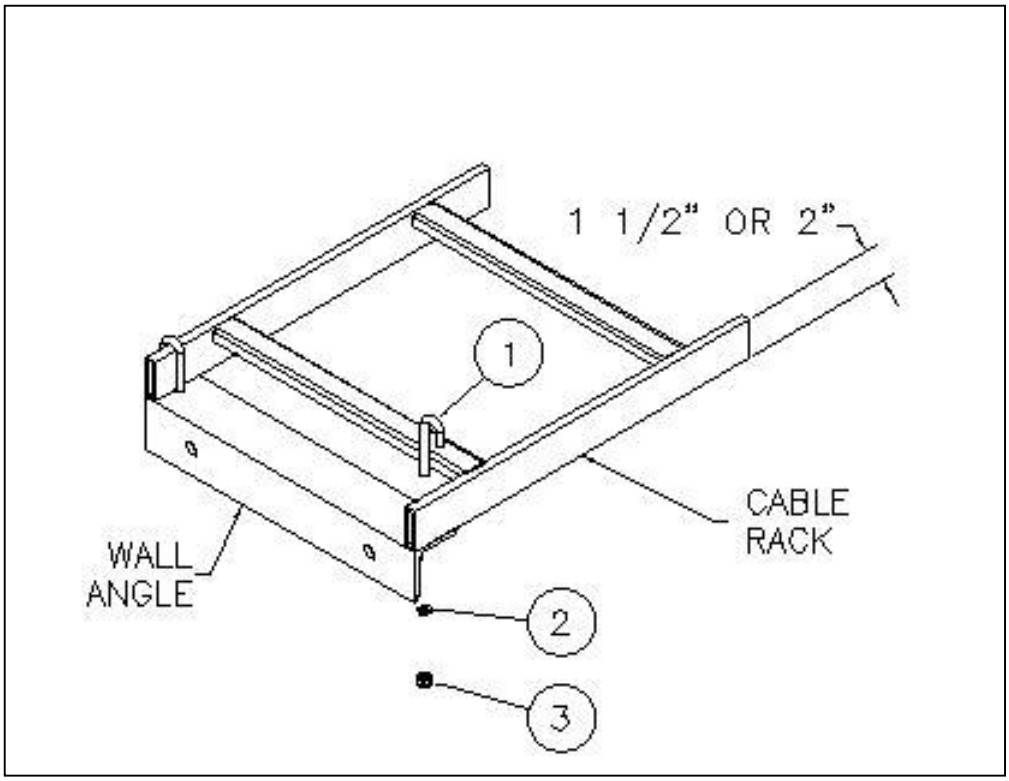

JBA4201-JBA4202			
ITEM #	CSF #	JBA4201 1-1/2" STRINGER	JBA4202 2" STRINGER
1	JB242	0	2
	JB243	2	0
2	LW154	2	2
3	HN144	2	2

NOTES:
- FINISH: ZINC AND YELLOW
- CABLE RACK AND WALL ANGLE NOT INCLUDED

Specifications subject to change. Please contact CSF Customer Service for more information.
© copyright 2004 Central Steel Fabricators, Inc.
http://www.centralsteelfab.com ◆ 2100 Parkes Drive, Broadview, IL 60155
Phone: 708-652-2037 Fax: 708-652-7010

ATTACH CABLE RACK TO WALL ANGLE

JBA4201

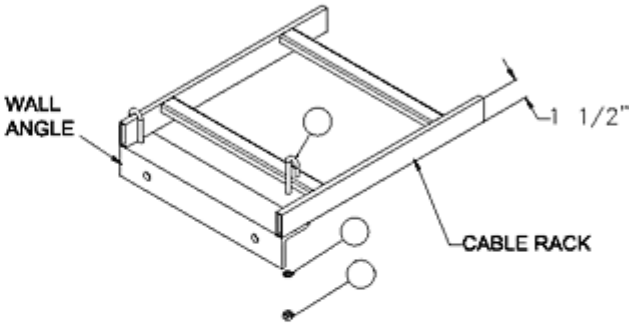

JBA4202

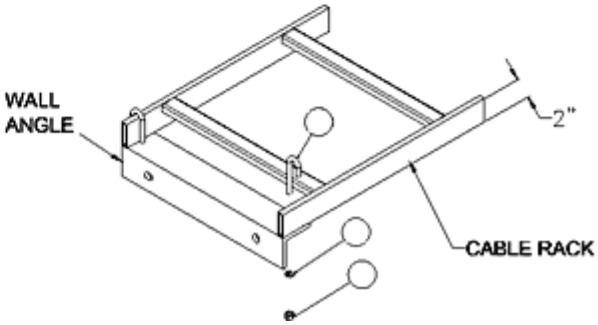

JBA4201-JBA4202			
ITEM #	CSF #	JBA4201	JBA4202
1	JB242	0	2
1	JB243	2	0
2	LW154	2	2
3	HN144	2	2

FINISH: ZINC DICHROMATE

Specifications subject to change. Please contact CSF Customer Service for more information.
© copyright 2004 Central Steel Fabricators, Inc.
http://www.centralsteelfab.com ◆ 2100 Parkes Drive, Broadview, IL 60155
Phone: 708-652-2037 Fax: 708-652-7010

ATTACH CABLE RACK TO TOP ANGLE

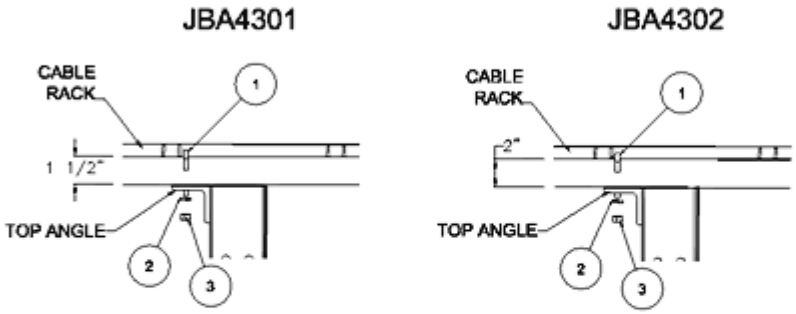

JBA4301-JBA4302			
ITEM #	CSF #	JBA4301	JBA4302
1	JB242	0	2
1	JB243	2	0
2	LW154	2	2
3	HN144	2	2

FINISH: ZINC DICHROMATE

Specifications subject to change. Please contact CSF Customer Service for more information.
© copyright 2004 Central Steel Fabricators, Inc.
http://www.centralsteelfab.com ◆ 2100 Parkes Drive, Broadview, IL 60155
Phone: 708-652-2037 Fax: 708-652-7010

ATTACH CABLE RACK STRINGER TO WALL ANGLE

JBA4401

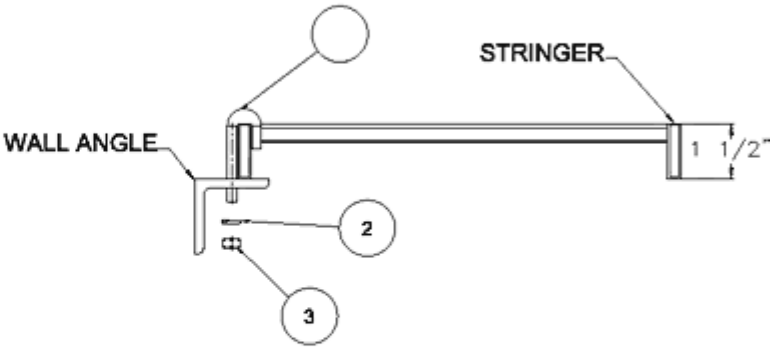

JBA4402

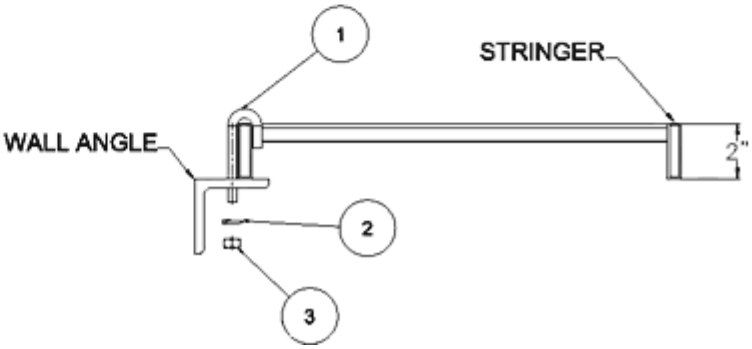

JBA4401-JBA4402			
ITEM #	CSF #	JBA4401	JBA4402
1	JB242	0	1
1	JB243	1	0
2	LW154	1	1
3	HN144	1	1

FINISH: ZINC DICHROMATE

Specifications subject to change. Please contact CSF Customer Service for more information.

© copyright 2004 Central Steel Fabricators, Inc.

http://www.centralsteelfab.com ◆ 2100 Parkes Drive, Broadview, IL 60155
Phone: 708-652-2037 Fax: 708-652-7010

ATTACH VERTICAL CABLE RACK TO HORIZONTAL CABLE RACK

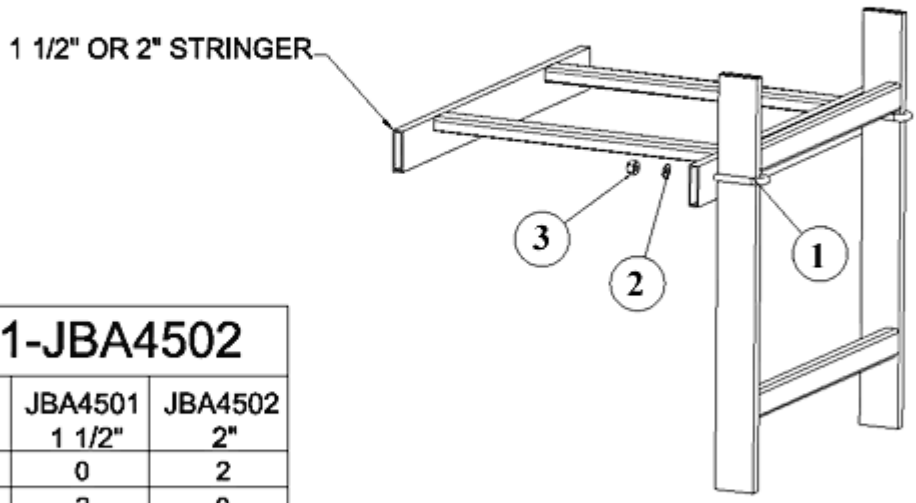

JBA4501-JBA4502			
ITEM #	CSF #	JBA4501 1 1/2"	JBA4502 2"
1	JB242	0	2
1	JB243	2	0
2	LW154	2	2
3	HN144	2	2

FINISH: ZINC DICHROMATE

Specifications subject to change. Please contact CSF Customer Service for more information.
© copyright 2004 Central Steel Fabricators, Inc.
http://www.centralsteelfab.com ◆ 2100 Parkes Drive, Broadview, IL 60155
Phone: 708-652-2037 Fax: 708-652-7010

MCR08XX MOUNTING CABLE RACK 2" ABOVE FLOOR

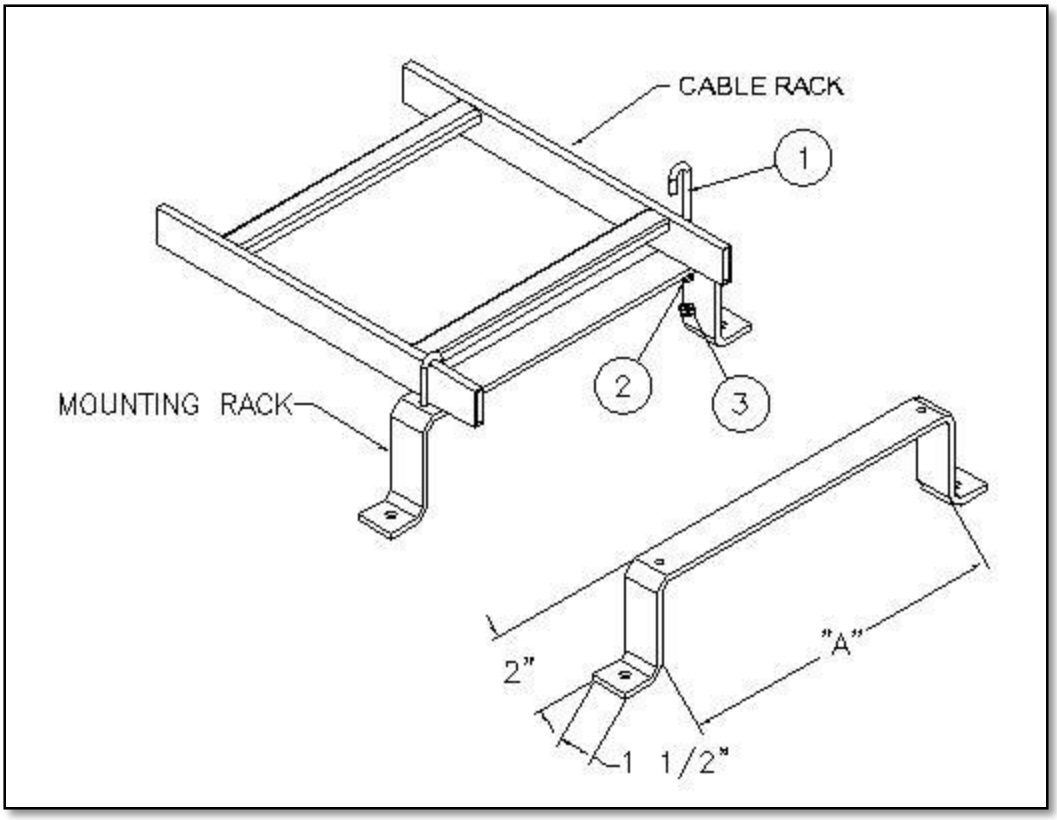

1.50" STRINGER		
MCR0801-MCR0811		
ITEM	"A"	CABLE RACK WIDTH
MCR0801XX	7.00"	5.00"
MCR0802XX	8.00"	6.00"
MCR0803XX	11.00"	9.00"
MCR0804XX	12.00"	10.00"
MCR0805XX	13.00"	11.00"
MCR0806XX	14.00"	12.00"
MCR0807XX	17.00"	15.00"
MCR0808XX	20.00"	18.00"
MCR0809XX	22.00"	20.00"
MCR0810XX	24.00"	22.00"
MCR0811XX	26.00"	24.00"
INCLUDES J-BOLT KIT JBA4201		

2.00" STRINGER		
MCR0812-MCR0822		
ITEM	"A"	CABLE RACK WIDTH
MCR0812XX	7.00"	5.00"
MCR0813XX	8.00"	6.00"
MCR0814XX	11.00"	9.00"
MCR0815XX	12.00"	10.00"
MCR0816XX	13.00"	11.00"
MCR0817XX	14.00"	12.00"
MCR0818XX	17.00"	15.00"
MCR0819XX	20.00"	18.00"
MCR0820XX	22.00"	20.00"
MCR0821XX	24.00"	22.00"
MCR0822XX	26.00"	24.00"
INCLUDES J-BOLT KIT JBA4202		

JBA4201 AND JBA4202			
ITEM#	CSF#	JBA4201	JBA4201
1	JB243	2	0
1	JB242	0	2
2	LW154	2	2
3	HN144	2	2

NOTES:
- FINISH: SEE TECH DATA FOR PAINT CODES MCR08XX, ALL OTHER PARTS ZINC AND YELLOW
- CABLE RACK NOT INCLUDED

Specifications subject to change. Please contact CSF Customer Service for more information.
© copyright 2004 Central Steel Fabricators, Inc.
http://www.centralsteelfab.com ◆ 2100 Parkes Drive, Broadview, IL 60155
Phone: 708-652-2037 Fax: 708-652-7010

MCR09XX MOUNTING CABLE RACK 4" ABOVE FLOOR

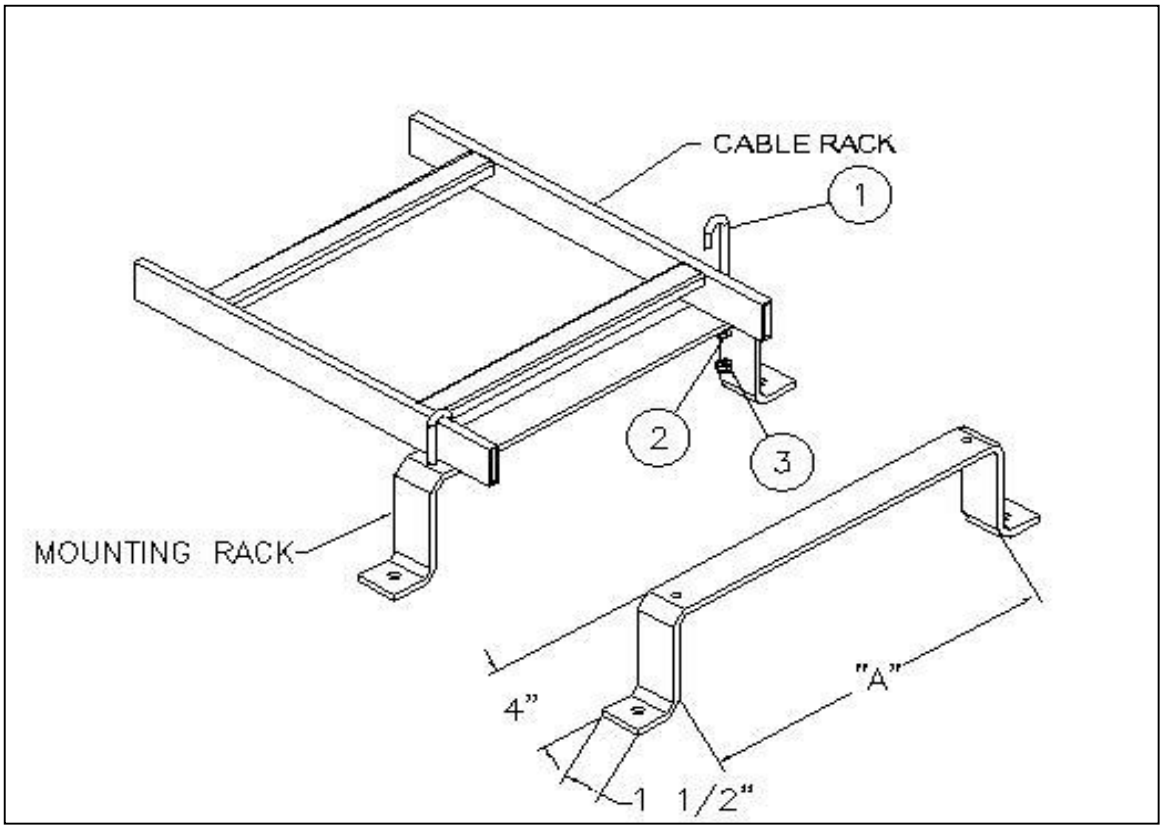

1.50" STRINGER		
MCR0901-MCR0911		
ITEM	"A"	CABLE RACK WIDTH
MCR0901XX	7.00"	5.00"
MCR0902XX	8.00"	6.00"
MCR0903XX	11.00"	9.00"
MCR0904XX	12.00"	10.00"
MCR0905XX	13.00"	11.00"
MCR0906XX	14.00"	12.00"
MCR0907XX	17.00"	15.00"
MCR0908XX	20.00"	18.00"
MCR0909XX	22.00"	20.00"
MCR0910XX	24.00"	22.00"
MCR0911XX	26.00"	24.00"
INCLUDES J-BOLT KIT JBA4201		

2.00" STRINGER		
MCR0912-MCR0922		
ITEM	"A"	CABLE RACK WIDTH
MCR0912XX	7.00"	5.00"
MCR0913XX	8.00"	6.00"
MCR0914XX	11.00"	9.00"
MCR0915XX	12.00"	10.00"
MCR0916XX	13.00"	11.00"
MCR0917XX	14.00"	12.00"
MCR0918XX	17.00"	15.00"
MCR0919XX	20.00"	18.00"
MCR0920XX	22.00"	20.00"
MCR0921XX	24.00"	22.00"
MCR0922XX	26.00"	24.00"
INCLUDES J-BOLT KIT JBA4202		

JBA4201 AND JBA4202			
ITEM#	CSF#	JBA4201	JBA4201
1	JB243	2	0
1	JB242	0	2
2	LW154	2	2
3	HN144	2	2

NOTES:
- FINISH: SEE TECH DATA FOR PAINT CODES MCR09XX, ALL OTHER PARTS ZINC AND YELLOW
- CABLE RACK NOT INCLUDED

Specifications subject to change. Please contact CSF Customer Service for more information.
© copyright 2004 Central Steel Fabricators, Inc.
http://www.centralsteelfab.com ◆ 2100 Parkes Drive, Broadview, IL 60155
Phone: 708-652-2037 Fax: 708-652-7010

MCR10XX MOUNTING CABLE RACK 6" ABOVE FLOOR

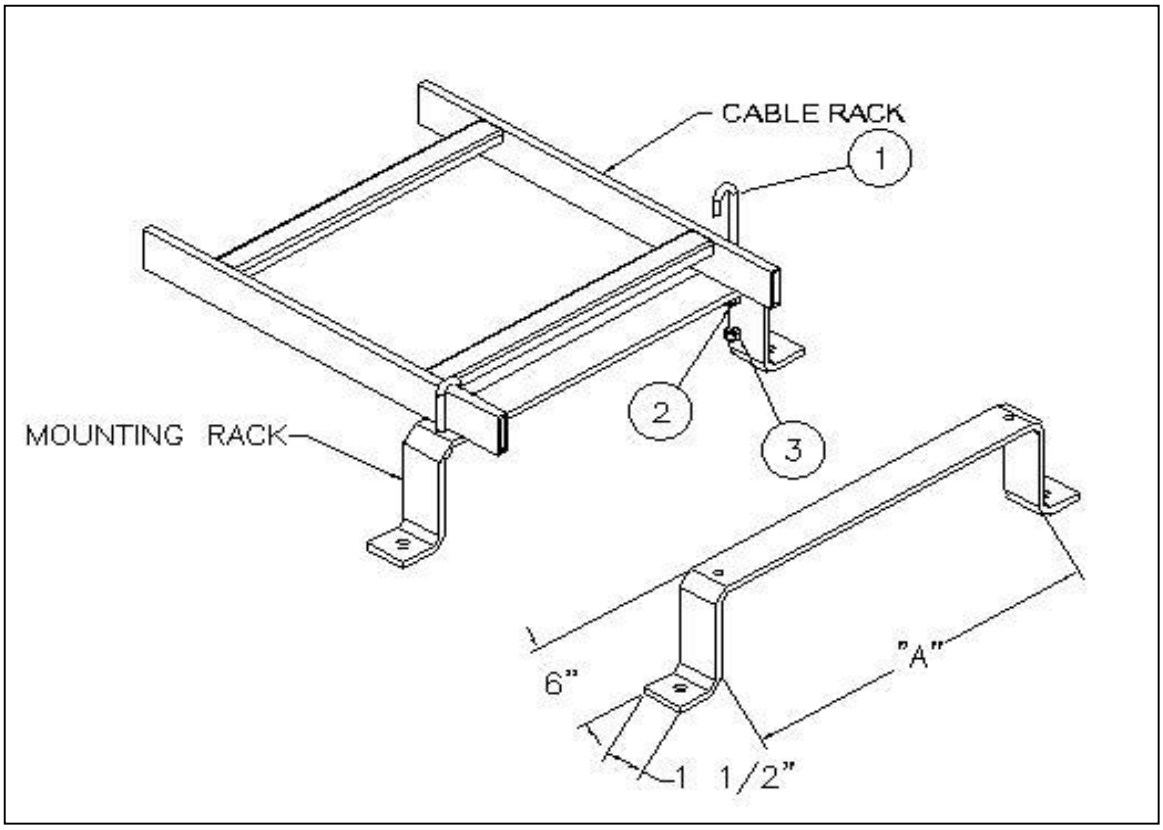

1.50" STRINGER		
MCR1001-MCR1011		
ITEM	"A"	CABLE RACK WIDTH
MCR1006XX	14.00"	12.00"
INCLUDES J-BOLT KIT JBA4201		

2.00" STRINGER		
MCR1012-MCR1022		
ITEM	"A"	CABLE RACK WIDTH
MCR1017XX	14.00"	12.00"
INCLUDES J-BOLT KIT JBA4202		

JBA4201 AND JBA4202			
ITEM#	CSF#	JBA4201	JBA4201
1	JB243	2	0
1	JB242	0	2
2	LW154	2	2
3	HN144	2	2

NOTES:
- FINISH: MCR10XX DG ALL OTHER PARTS ZINC AND YELLOW
- CABLE RACK NOT INCLUDED
- OTHER SIZES AVAILABLE FOR QUOTE

RVSD*1210

Specifications subject to change. Please contact CSF Customer Service for more information.

© copyright 2004 Central Steel Fabricators, Inc.
http://www.centralsteelfab.com ◆ 2100 Parkes Drive, Broadview, IL 60155
Phone: 708-652-2037 Fax: 708-652-7010

MOUNTING CABLE RACK 2" ABOVE FLOOR

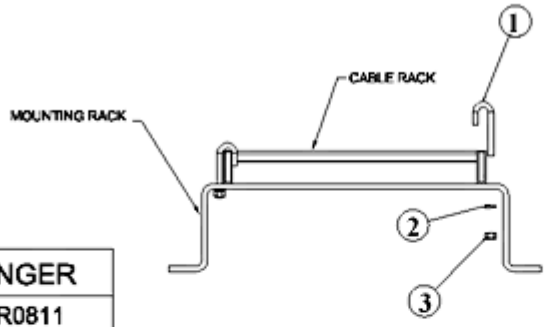

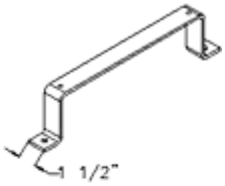

1 1/2" STRINGER		
MCR0801-MCR0811		
ITEM	"A"	CABLE RACK WIDTH
MCR0801_ _	7"	5"
MCR0802_ _	8"	6"
MCR0803_ _	11"	9"
MCR0804_ _	12"	10"
MCR0805_ _	13"	11"
MCR0806_ _	14"	12"
MCR0807_ _	17"	15"
MCR0808_ _	20"	18"
MCR0809_ _	22"	20"
MCR0810_ _	24"	22"
MCR0811_ _	26"	24"
INCLUDES J-BOLT KIT JBA4201		

2" STRINGER		
MCR0812-MCR0822		
ITEM	"A"	CABLE RACK WIDTH
MCR0612_ _	7"	5"
MCR0613_ _	8"	6"
MCR0614_ _	11"	9"
MCR0615_ _	12"	10"
MCR0616_ _	13"	11"
MCR0617_ _	14"	12"
MCR0618_ _	17"	15"
MCR0619_ _	20"	18"
MCR0620_ _	22"	20"
MCR0621_ _	24"	22"
MCR0622_ _	26"	24"
INCLUDES J-BOLT KIT JBA4202		

1 1/2" KIT		
ITEM	CSF #	JBA4201
1	JB243	2
2	LW154	2
3	HN144	2

FINISH SUFFIX	POWDER COAT PAINT FINISH
C B	CENTRAL OFFICE BLUE
D G	DARK GRAY

OTHER FINISHES AVAILABLE UPON REQUEST

2" KIT		
ITEM	CSF #	JBA4202
1	JB242	2
2	LW154	2
3	HN144	2

Specifications subject to change. Please contact CSF Customer Service for more information.

© copyright 2004 Central Steel Fabricators, Inc.
http://www.centralsteelfab.com ◆ 2100 Parkes Drive, Broadview, IL 60155
Phone: 708-652-2037 Fax: 708-652-7010

MOUNTING CABLE RACK 4" ABOVE FLOOR

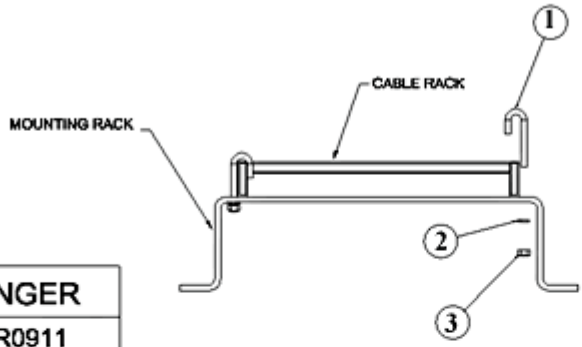

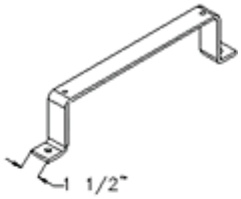

1 1/2" STRINGER		
MCR0901-MCR0911		
ITEM	"A"	CABLE RACK WIDTH
MCR0901__	7"	5"
MCR0902__	8"	6"
MCR0903__	11"	9"
MCR0904__	12"	10"
MCR0905__	13"	11"
MCR0906__	14"	12"
MCR0907__	17"	15"
MCR0908__	20"	18"
MCR0909__	22"	20"
MCR0910__	24"	22"
MCR0911__	26"	24"
INCLUDES J-BOLT KIT JBA4201		

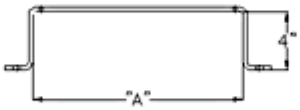

2" STRINGER		
MCR0912-MCR0922		
ITEM	"A"	CABLE RACK WIDTH
MCR0912__	7"	5"
MCR0913__	8"	6"
MCR0914__	11"	9"
MCR0915__	12"	10"
MCR0916__	13"	11"
MCR0917__	14"	12"
MCR0918__	17"	15"
MCR0919__	20"	18"
MCR0920__	22"	20"
MCR0921__	24"	22"
MCR0922__	26"	24"
INCLUDES J-BOLT KIT JBA4202		

1 1/2" KIT		
ITEM	CSF #	JBA4201
1	JB243	2
2	LW154	2
3	HN144	2

FINISH SUFFIX	POWDER COAT PAINT FINISH
C B	CENTRAL OFFICE BLUE
D G	DARK GRAY

OTHER FINISHES AVAILABLE UPON REQUEST

2" KIT		
ITEM	CSF #	JBA4202
1	JB242	2
2	LW154	2
3	HN144	2

Specifications subject to change. Please contact CSF Customer Service for more information.

© copyright 2004 Central Steel Fabricators, Inc.
http://www.centralsteelfab.com ◆ 2100 Parkes Drive, Broadview, IL 60155
Phone: 708-652-2037 Fax: 708-652-7010

MOUNTING CABLE RACK 6" ABOVE FLOOR

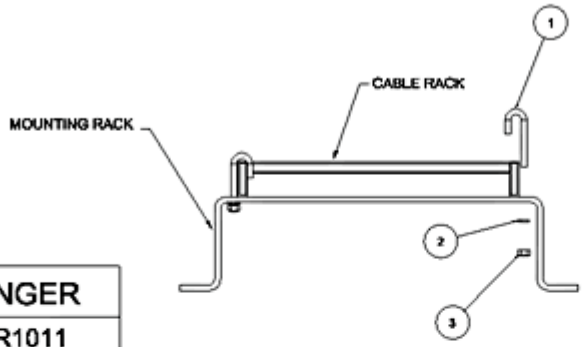

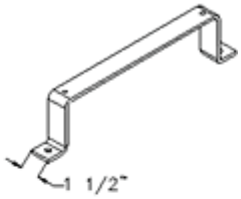

1 1/2" STRINGER		
MCR1001-MCR1011		
ITEM	"A"	CABLE RACK WIDTH
MCR1001_ _	7"	5"
MCR1002_ _	8"	6"
MCR1003_ _	11"	9"
MCR1004_ _	12"	10"
MCR1005_ _	13"	11"
MCR1006_ _	14"	12"
MCR1007_ _	17"	15"
MCR1008_ _	20"	18"
MCR1009_ _	22"	20"
MCR1010_ _	24"	22"
MCR1011_ _	26"	24"
INCLUDES J-BOLT KIT JBA4201		

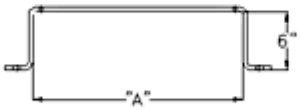

2" STRINGER		
MCR1012-MCR1022		
ITEM	"A"	CABLE RACK WIDTH
MCR1012_ _	7"	5"
MCR1013_ _	8"	6"
MCR1014_ _	11"	9"
MCR1015_ _	12"	10"
MCR1016_ _	13"	11"
MCR1017_ _	14"	12"
MCR1018_ _	17"	15"
MCR1019_ _	20"	18"
MCR1020_ _	22"	20"
MCR1021_ _	24"	22"
MCR1022_ _	26"	24"
INCLUDES J-BOLT KIT JBA4202		

1 1/2" KIT		
ITEM	CSF #	JBA4201
1	JB243	2
2	LW154	2
3	HN144	2

FINISH SUFFIX	POWDER COAT PAINT FINISH
C B	CENTRAL OFFICE BLUE
D G	DARK GRAY

OTHER FINISHES AVAILABLE UPON REQUEST

2" KIT		
ITEM	CSF #	JBA4202
1	JB242	2
2	LW154	2
3	HN144	2

Specifications subject to change. Please contact CSF Customer Service for more information.

© copyright 2004 Central Steel Fabricators, Inc.
http://www.centralsteelfab.com ◆ 2100 Parkes Drive, Broadview, IL 60155
Phone: 708-652-2037 Fax: 708-652-7010

3/8-16UNC-2B – [THREADED ROD]

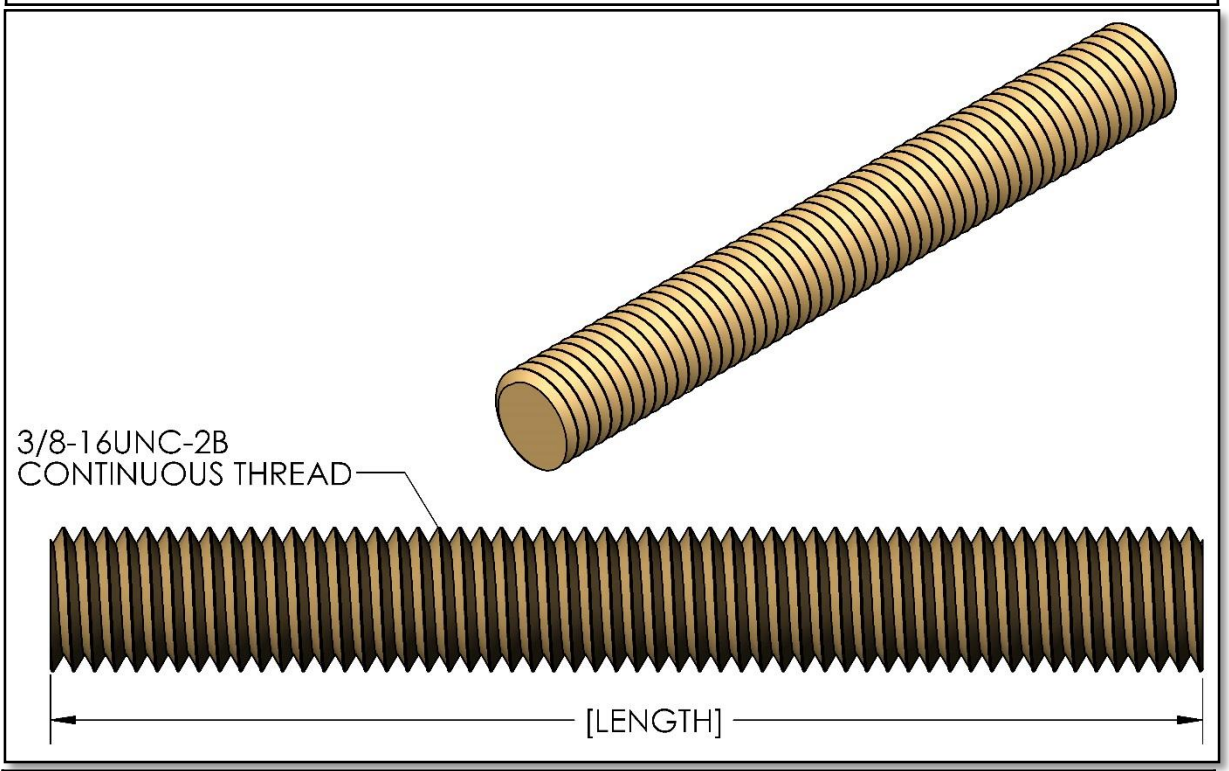

TR01 - TR07 - 3/8-16UNC-2B [THREADED ROD]		
CSF#	LENGTH	DESCRIPTION
TR01	2.50”	3/8-16UNC-2B – THREADED ROD
TR02	2.75”	3/8-16UNC-2B – THREADED ROD
TR03	3.00”	3/8-16UNC-2B – THREADED ROD
TR04	3.25”	3/8-16UNC-2B – THREADED ROD
TR05	3.50”	3/8-16UNC-2B – THREADED ROD
TR06	3.75”	3/8-16UNC-2B – THREADED ROD
TR07	4.00”	3/8-16UNC-2B – THREADED ROD

TR08 – TR18 - 3/8-16UNC-2B [THREADED ROD]		
CSF#	LENGTH	DESCRIPTION
TR08	6.00”	3/8-16UNC-2B – THREADED ROD
TR09	12.00”	3/8-16UNC-2B – THREADED ROD
TR10	18.00”	3/8-16UNC-2B – THREADED ROD
TR11	24.00”	3/8-16UNC-2B – THREADED ROD
TR12	30.00”	3/8-16UNC-2B – THREADED ROD
TR13	36.00”	3/8-16UNC-2B – THREADED ROD
TR14	42.00”	3/8-16UNC-2B – THREADED ROD
TR15	48.00”	3/8-16UNC-2B – THREADED ROD
TR16	54.00”	3/8-16UNC-2B – THREADED ROD
TR17	60.00”	3/8-16UNC-2B – THREADED ROD
TR18	72.00”	3/8-16UNC-2B – THREADED ROD

NOTES:
- FINISH: ZINC AND YELLOW

RVSD*1216

Specifications subject to change. Please contact CSF Customer Service for more information.

© copyright 2004 Central Steel Fabricators, Inc.
http://www.centralsteelfab.com ◆ 2100 Parkes Drive, Broadview, IL 60155
Phone: 708-652-2037 Fax: 708-652-7010

1/2-13UNC-2B - [THREADED ROD]

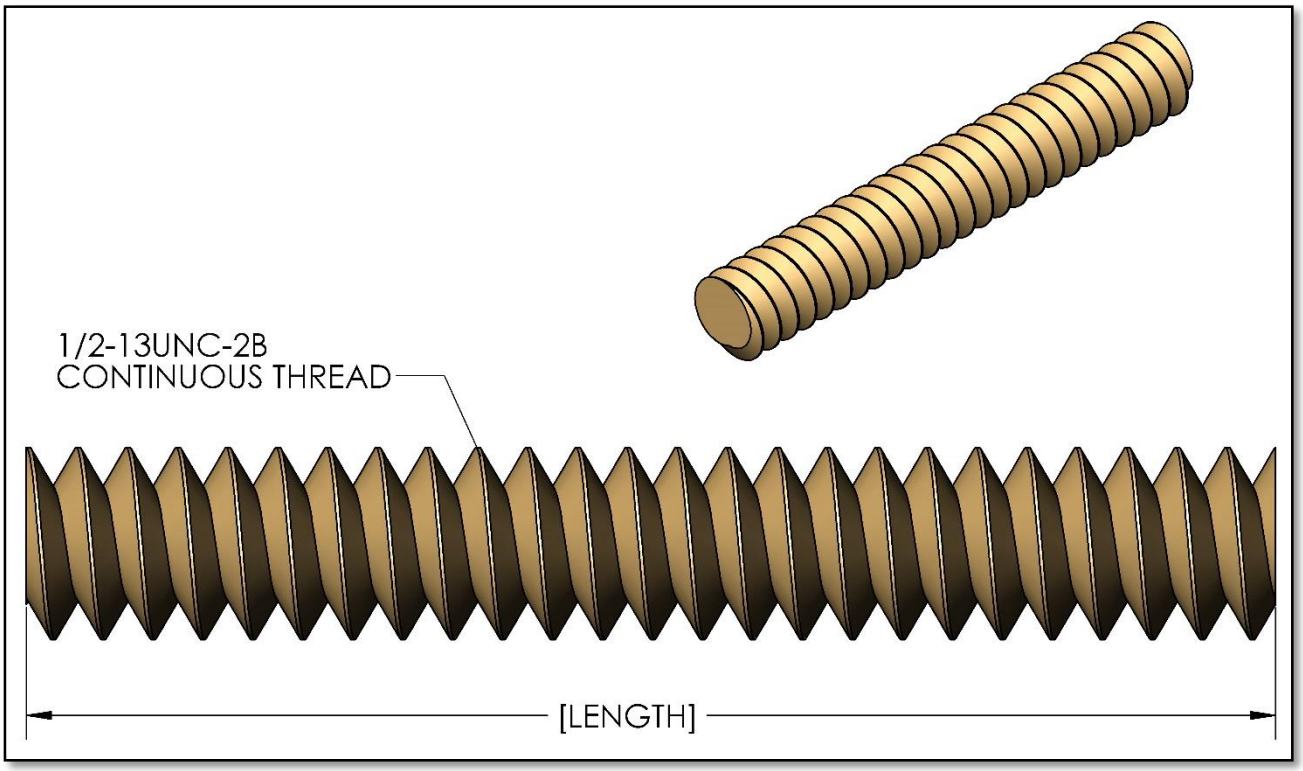

TR29 – TR40 – 1/2-13 THREADED ROD	
CSF#	DESCRIPTION
TR29	1/2-13 THREADED ROD X 3.25" LG.
TR30	1/2-13 THREADED ROD X 6.00" LG.
TR31	1/2-13 THREADED ROD X 12.00" LG.
TR32	1/2-13 THREADED ROD X 18.00" LG.
TR33	1/2-13 THREADED ROD X 24.00" LG.
TR34	1/2-13 THREADED ROD X 30.00" LG.
TR35	1/2-13 THREADED ROD X 36.00" LG.
TR36	1/2-13 THREADED ROD X 42.00" LG.
TR37	1/2-13 THREADED ROD X 48.00" LG.
TR38	1/2-13 THREADED ROD X 54.00" LG.
TR39	1/2-13 THREADED ROD X 60.00" LG.
TR40	1/2-13 THREADED ROD X 72.00" LG.

TR7031 – TR7041 – 1/2-13 THREADED ROD [B7]	
CSF#	DESCRIPTION
TR7031	1/2-13 THREADED ROD X 12.00" LG. [B7]
TR7033	1/2-13 THREADED ROD X 24.00" LG. [B7]
TR7034	1/2-13 THREADED ROD X 30.00" LG. [B7]
TR7035	1/2-13 THREADED ROD X 36.00" LG. [B7]
TR7040	1/2-13 THREADED ROD X 72.00" LG. [B7]
TR7041	1/2-13 THREADED ROD X 120.00" LG. [B7]

NOTES:
FINISH: ZINC AND YELLOW TR70XX SERIES ARE [B7]

RVSD*1216

Specifications subject to change. Please contact CSF Customer Service for more information.

© copyright 2004 Central Steel Fabricators, Inc.
http://www.centralsteelfab.com ◆ 2100 Parkes Drive, Broadview, IL 60155
Phone: 708-652-2037 Fax: 708-652-7010

5/8-11UNC-2B - THREADED ROD

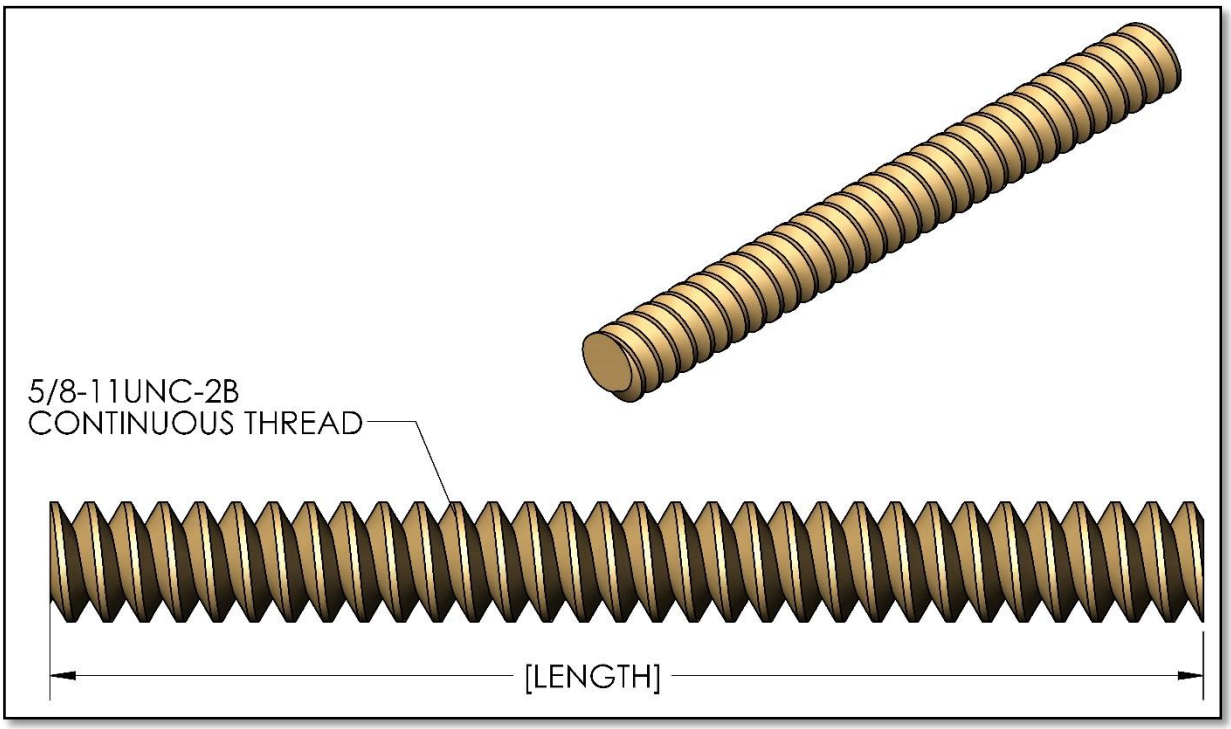

TR50 – TR61 – 5/8-11 THREADED ROD	
CSF#	DESCRIPTION
TR50	5/8-11 THREADED ROD X 6.00" LG.
TR51	5/8-11 THREADED ROD X 12.00" LG
TR52	5/8-11 THREADED ROD X 18.00" LG
TR53	5/8-11 THREADED ROD X 24.00" LG
TR55	5/8-11 THREADED ROD X 36.00" LG
TR57	5/8-11 THREADED ROD X 48.00" LG
TR59	5/8-11 THREADED ROD X 60.00" LG
TR60	5/8-11 THREADED ROD X 72.00" LG
TR61	5/8-11 THREADED ROD X 120.00" LG

TR7050 [B7] – TR7061 [B7]	
CSF#	DESCRIPTION
TR7050	5/8-11 THREADED ROD X 6.00" LG. [B7]
TR7052	5/8-11 THREADED ROD X 18.00" LG. [B7]
TR7053	5/8-11 THREADED ROD X 24.00" LG. [B7]
TR7054	5/8-11 THREADED ROD X 30.00" LG. [B7]
TR7055	5/8-11 THREADED ROD X 36.00" LG. [B7]
TR7056	5/8-11 THREADED ROD X 42.00" LG. [B7]
TR7057	5/8-11 THREADED ROD X 48.00" LG. [B7]
TR7058	5/8-11 THREADED ROD X 54.00" LG. [B7]
TR7060	5/8-11 THREADED ROD X 72.00" LG. [B7]
TR7061	5/8-11 THREADED ROD X 120.00" LG. [B7]

NOTES:

- FINISH: ZINC AND YELLOW
- TR70XX SERIES ARE [B7]

RVSD*0316

Specifications subject to change. Please contact CSF Customer Service for more information.

© copyright 2004 Central Steel Fabricators, Inc.
http://www.centralsteelfab.com ◆ 2100 Parkes Drive, Broadview, IL 60155
Phone: 708-652-2037 Fax: 708-652-7010

THREADED ROD COUPLING

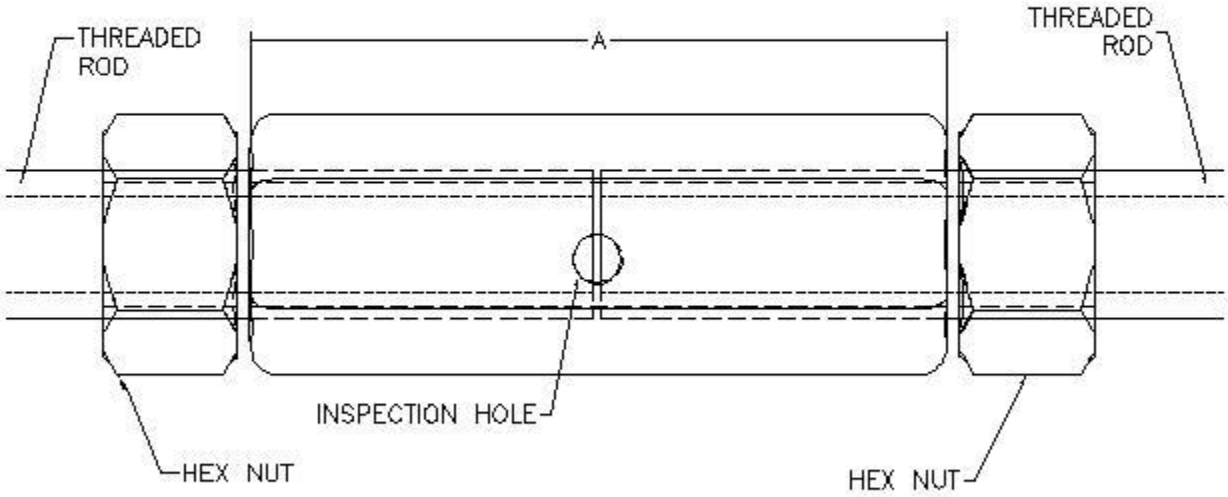

TRC53XX		
CSF #	"A"	THREAD
TRC5301	1.75"	3/8" -16
TRC5302	1.75"	1/2" -13
TRC5303	2.13"	5/8" -11

NOTES:
- FINISH: ZINC AND YELLOW
- EACH COUPLING PROVIDED WITH 2 HEX NUTS OF SAME THREAD SIZE

RVSD*0612

Specifications subject to change. Please contact CSF Customer Service for more information.

© copyright 2004 Central Steel Fabricators, Inc.
http://www.centralsteelfab.com ◆ 2100 Parkes Drive, Broadview, IL 60155
Phone: 708-652-2037 Fax: 708-652-7010

THREADED ROD COUPLING

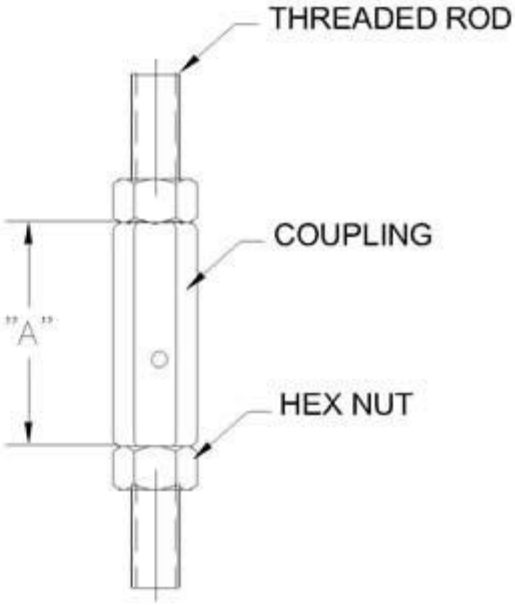

TRC5301-TRC5303		
CSF #	"A"	THREAD
TRC5301	1 3/4"	3/8"-16
TRC5302	1 3/4"	1/2"-13
TRC5303	2 1/8"	5/8"-11

NOTE: EACH COUPLING PROVIDED WITH 2 HEX NUTS OF SAME THREAD SIZE

Specifications subject to change. Please contact CSF Customer Service for more information.
© copyright 2004 Central Steel Fabricators, Inc.
http://www.centralsteelfab.com ◆ 2100 Parkes Drive, Broadview, IL 60155
Phone: 708-652-2037 Fax: 708-652-7010

WCXX WALL CLIP FOR 1.50" & 2" STRINGER

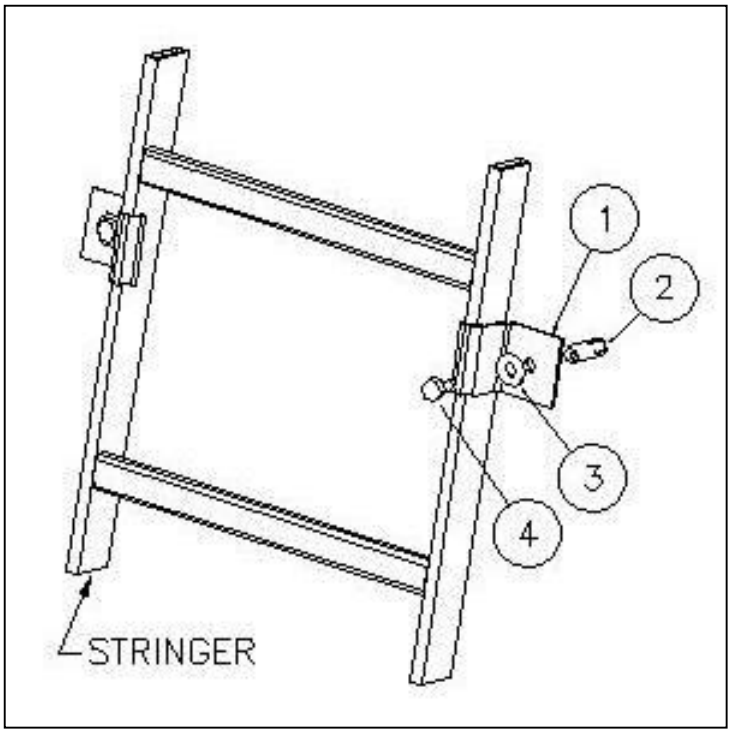

1.50" STRINGER			
ITEM#	CSF#	WC12	WC12K
1	WC1	2	2
2	DIA37	0	2
3	FW166	0	2
4	HH1003	0	2

2.00" STRINGER			
ITEM#	CSF#	WC22	WC22K
1	WC2	2	2
2	DIA37	0	2
3	FW166	0	2
4	HH1003	0	2

NOTES:

- FINISH: ZINC AND YELLOW
- CABLE RACK NOT INCLUDED

Specifications subject to change. Please contact CSF Customer Service for more information.
© copyright 2004 Central Steel Fabricators, Inc.
http://www.centralsteelfab.com ◆ 2100 Parkes Drive, Broadview, IL 60155
Phone: 708-652-2037 Fax: 708-652-7010

WALL CLIP FOR 1 1/2" & 2" STRINGER

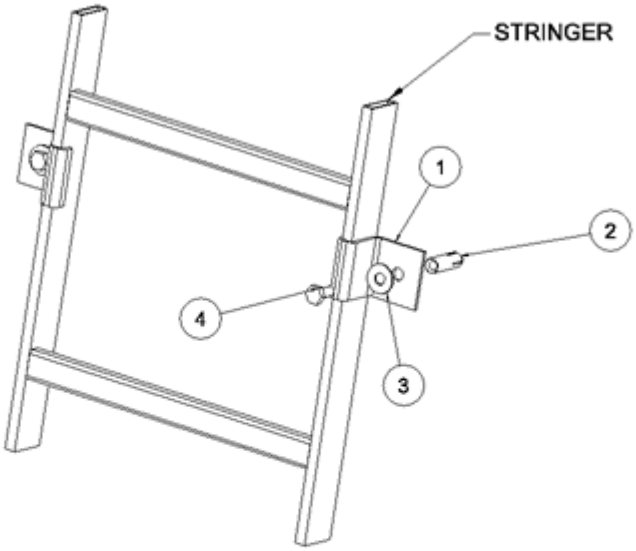

1 1/2" STRINGER			
ITEM #	CSF #	WC12	WC12K
1	WC1	2	2
2	DIA37	0	2
3	FW166	0	2
4	HH1003	0	2

2" STRINGER			
ITEM #	CSF #	WC22	WC22K
1	WC2	2	2
2	DIA37	0	2
3	FW166	0	2
4	HH1003	0	2

FINISH: ZINC DICHROMATE

Specifications subject to change. Please contact CSF Customer Service for more information.
© copyright 2004 Central Steel Fabricators, Inc.
http://www.centralsteelfab.com ◆ 2100 Parkes Drive, Broadview, IL 60155
Phone: 708-652-2037 Fax: 708-652-7010

WMxxxx – Wall Mount Bracket Kit For Cable Rack

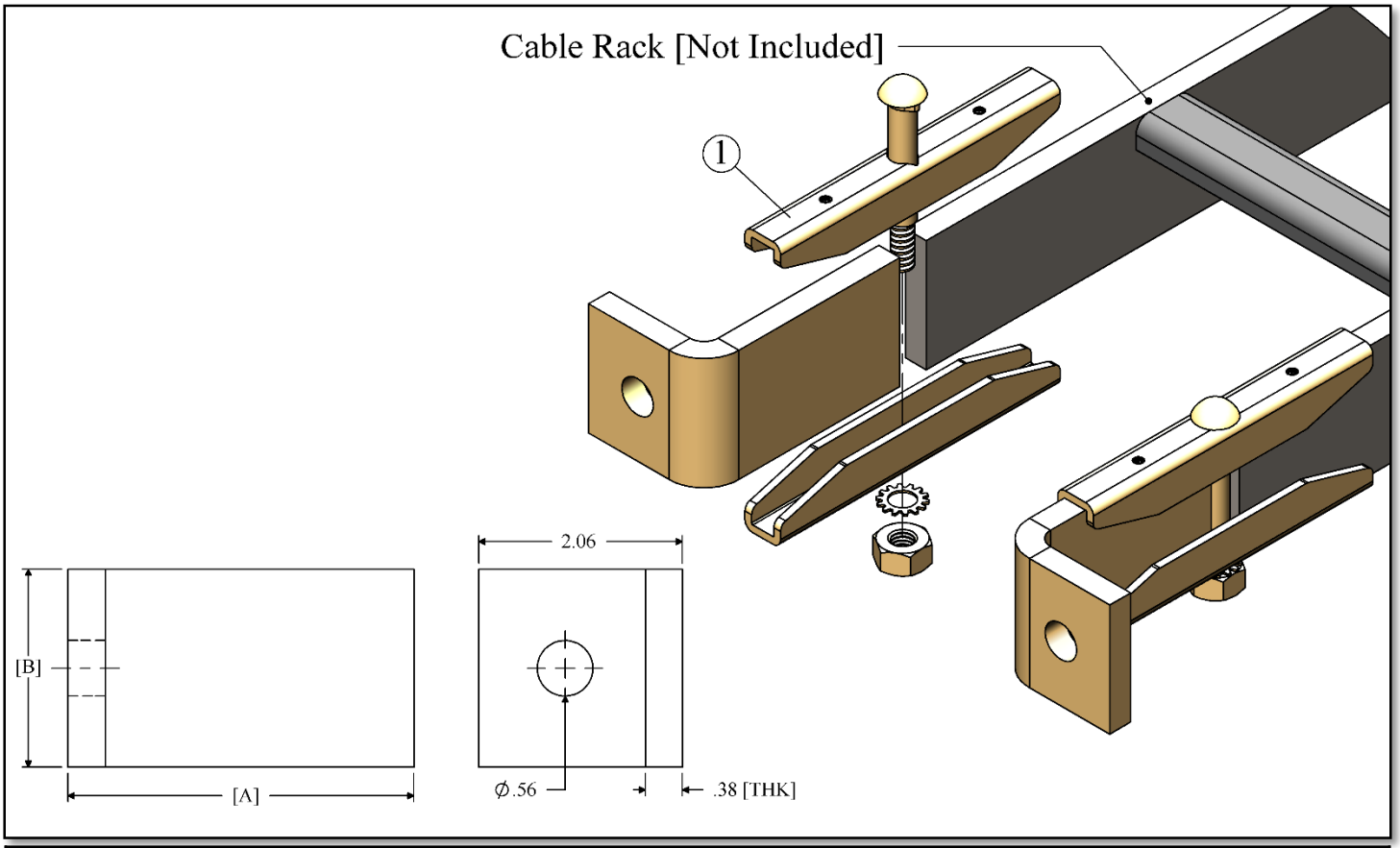

1.50” Cable Rack Wall Mount Bracket			
CSF#	[A]	[B]	Description
WM11xx	3.50”	1.50”	1.50” Cable Rack Mount Bracket x 3.50” LG.
WM12xx	6.00”	1.50”	1.50” Cable Rack Mount Bracket x 6.00” LG.

2.00” Cable Rack Wall Mount Bracket			
CSF#	[A]	[B]	Description
WM21xx	3.50”	2.00”	2.00” Cable Rack Mount Bracket x 3.50” LG.
WM22xx	6.00”	2.00”	2.00” Cable Rack Mount Bracket x 6.00” LG.
WM23xx	12.00”	2.00”	2.00” Cable Rack Mount Bracket x 12.00” LG.

SCxx– Straight Clamp Kit [Pair] - Hardware Kit			
Item#	CSF P/N#	QTY	Description
1	SC12	1	Straight Clamp Kit [Pair] For 1.50” Cable Rack
1	SC22	1	Straight Clamp Kit [Pair] For 2.00” Cable Rack

Note: When using to fasten Cable Rack to floor or wall,
Order Qty: 2 WMxx Brackets and the appropriate splice [SC12 or SC22]

Specifications subject to change. Please contact CSF Customer Service for more information.

© copyright 2004 Central Steel Fabricators, Inc.
http://www.centralsteelfab.com ◆ 2100 Parkes Drive, Broadview, IL 60155
Phone: 708-652-2037 Fax: 708-652-7010

WSB65XX WALL SUPPORT BRACKET FOR CABLE RACKS

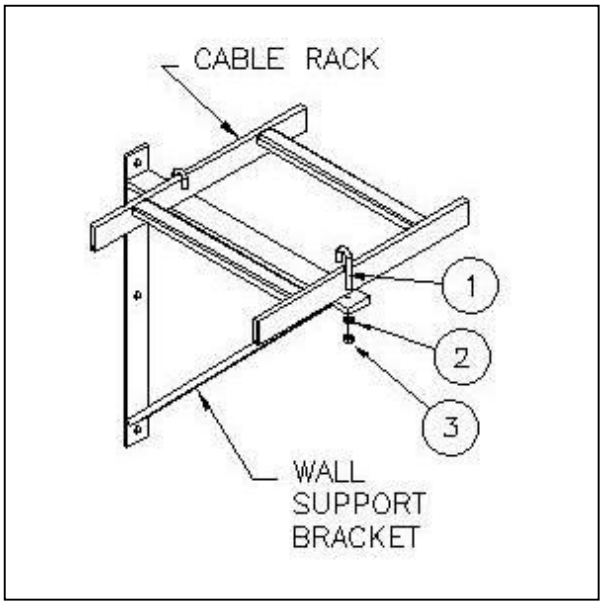

ITEM	DESCRIPTION
WSB6502XX	FOR 5.00" & 6.00" CABLE RACK
WSB6504XX	FOR 10.00" CABLE RACK
WSB6506XX	FOR 12.00" CABLE RACK
WSB6508XX	FOR 15.00" & 18.00" CABLE RACK
WSB6520XX	FOR 20.00" CABLE RACK
WSB6524XX	FOR 24.00" CABLE RACK
1.50"/ 2.00" J-BOLT KIT [INCLUDED]	

NOTES:
- XX = ZY, DG, CB, BL
- FINISH: ALL HARDWARE ZINC AND YELLOW
- CABLE RACK NOT INCLUDED

WALL SUPPORT BRACKET - HARDWARE KIT			
ITEM#	CSF#	DESCRIPTION	QTY
1	JB243 [INCLUDED]	1/4 – 20 J-BOLT X 2.25" LG.	2
1	JB242 [INCLUDED]	1/4 – 20 J-BOLT X 3.25" LG.	2
2	LW154	1/4 SPRING LOCKWASHER	4
3	HN144	1/4 – 20 HEN NUT	4

RVSD*1013

Specifications subject to change. Please contact CSF Customer Service for more information.

© copyright 2004 Central Steel Fabricators, Inc.
http://www.centralsteelfab.com ◆ 2100 Parkes Drive, Broadview, IL 60155 ◆
Phone: 708-652-2037 Fax: 708-652-7010

WSB2XXSZYK12 UNISTRUT WALL SUPPORT BRACKET FOR CABLE RK

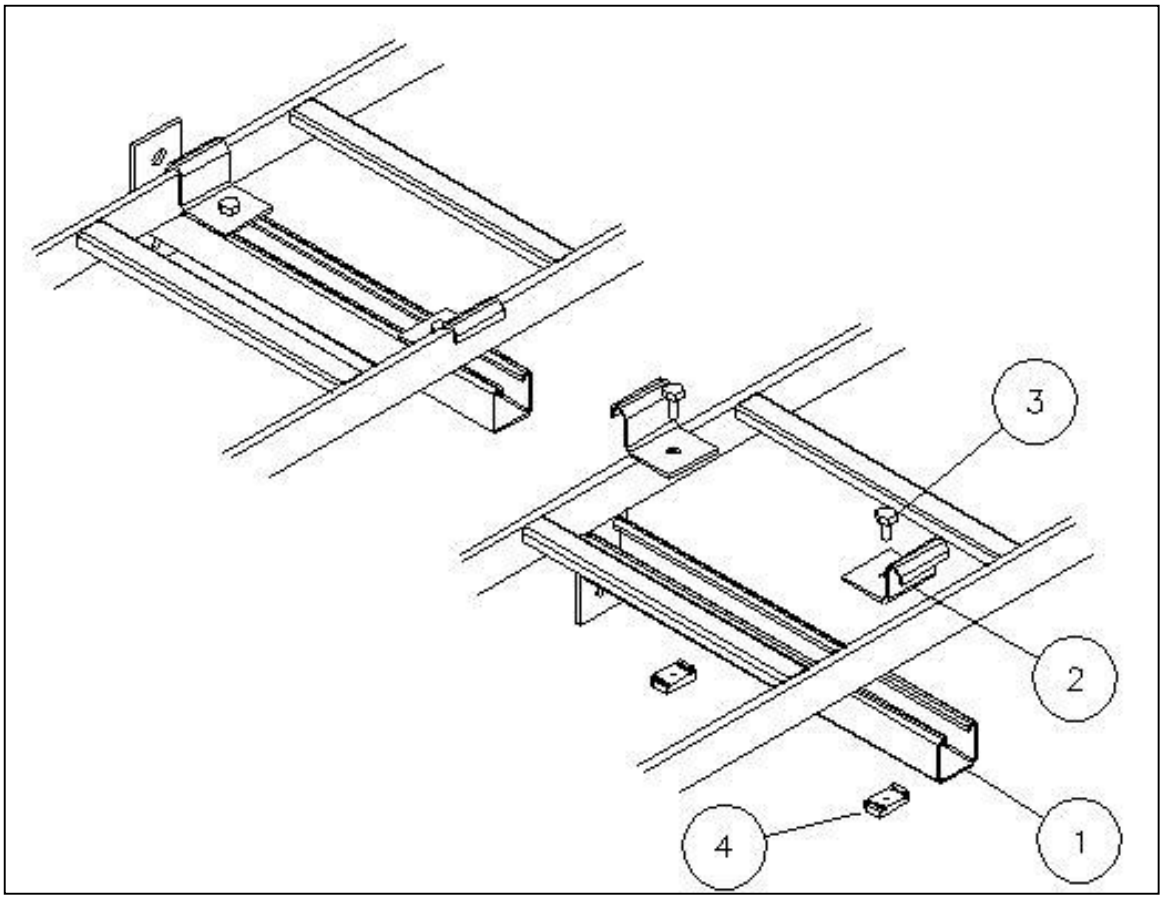

WSB2XXSZYK12			
ITEM#	CSF#	WSB213SZYK12 1.50" STRINGER	WSB223SZYK12 2.00" STRINGER
1	WSB213S	1	1
2	WC1	2	0
2	WC2	0	2
3	HH1003	2	2
4	USN37N	2	2

NOTES:
-KIT ACCOMMODATES CABLE RACKS 12" WIDE OR LESS.
-HARDWARE TO ATTACH TO WALL AND CABLE RACK ARE NOT INCLUDED.
-FINISH: ZINC AND YELLOW

Specifications subject to change. Please contact CSF Customer Service for more information.
© copyright 2004 Central Steel Fabricators, Inc.
http://www.centralsteelfab.com ◆ 2100 Parkes Drive, Broadview, IL 60155
Phone: 708-652-2037 Fax: 708-652-7010

AIR DRY ENAMEL

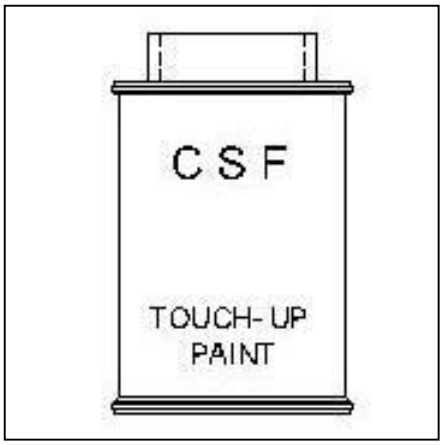

TOUCH-UP PAINT			
CSF#	SIZE	COLOR	TYPE
TP01B	.6 OZ	CENTRAL OFFICE BLUE (CB)	BRUSH
TP01D	.6 OZ	TELEPHONE GRAY (DG)	BRUSH
TP01P	.6 OZ	PUTTY WHITE (PW)	BRUSH
TP08B	8 OZ	CENTRAL OFFICE BLUE (CB)	BRUSH
TP08D	8 OZ	TELEPHONE GRAY (DG)	BRUSH
TP08P	8 OZ	PUTTY WHITE (PW)	BRUSH
TP12	12 OZ	AT&T GRAY	AEROSOL
TP12B	12 OZ	CENTRAL OFFICE BLUE (CB)	AEROSOL
TP12D	12 OZ	TELEPHONE GRAY (DG)	AEROSOL
TP12PW	12 OZ	PUTTY WHITE (PW)	AEROSOL
TP32B	32 OZ	CENTRAL OFFICE BLUE (CB)	BULK
TP32D	32 OZ	TELEPHONE GRAY (DG)	BULK

Specifications subject to change. Please contact CSF Customer Service for more information.
© copyright 2004 Central Steel Fabricators, Inc.
http://www.centralsteelfab.com ◆ 2100 Parkes Drive, Broadview, IL 60155
Phone: 708-652-2037 Fax: 708-652-7010

TLA122GNK – TERMINAL LUG ASSEMBLY - 6 GAUGE GREEN 2 LUG X 12.00” LG

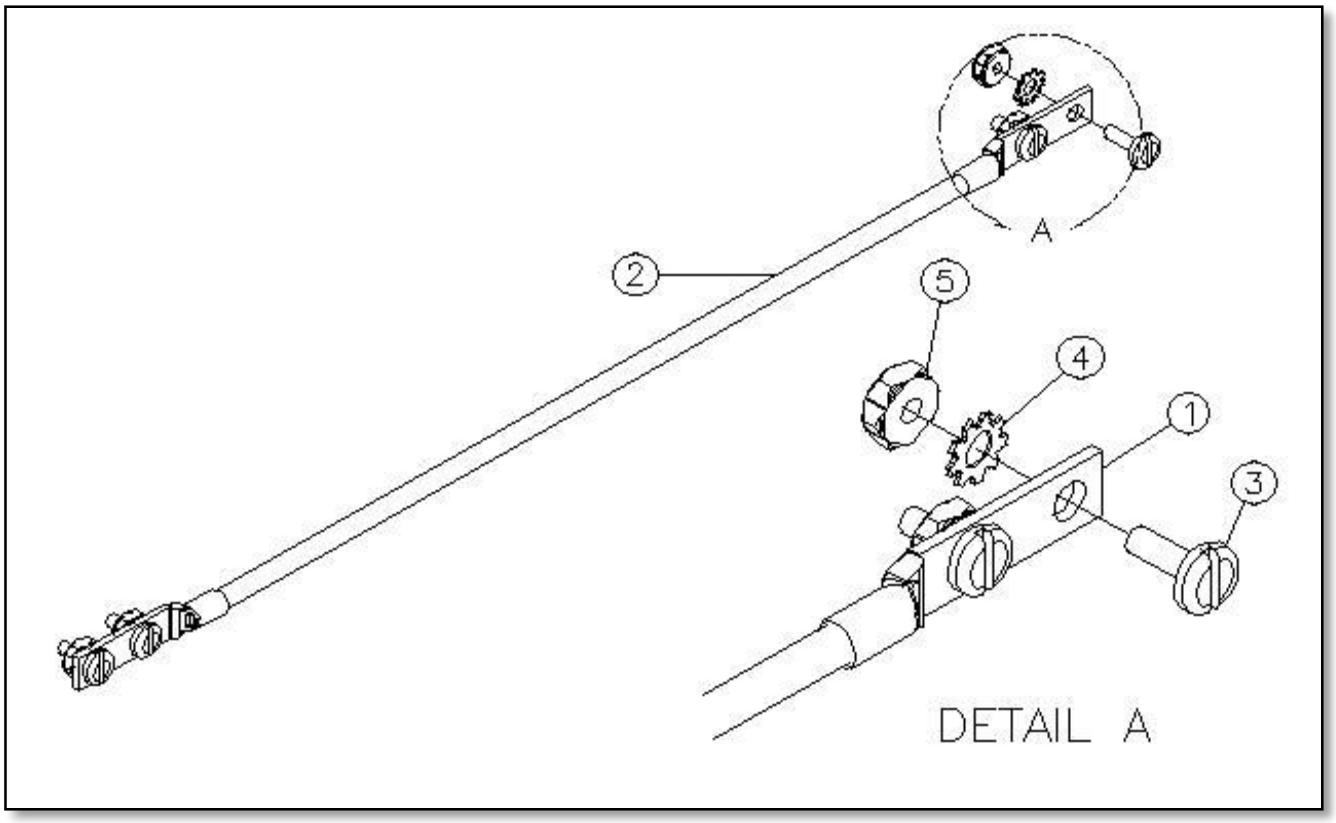

TLA122GNK – TERMINAL LUG ASSEMBLY - 6 GAUGE GREEN 2 LUG X 12.00” LG.			
ITEM	QTY	CSF#	DESCRIPTION
1	2	KS15977	2 HOLE LUG TND CPR 3/4” O.C.
2	1	1S0604GN	#6 GREEN AWG WIRE/ FOOT CL 1M RL
3	4	PH0403FST	12-24 X 1/2” PH PHIL CUTTING ZY
4	4	LWE153	#12 EXTERNAL TOOTH LOCKWASHER ZY
5	4	HN143	12-24 HEX NUT ZY

Specifications subject to change. Please contact CSF Customer Service for more information.
© copyright 2004 Central Steel Fabricators, Inc.
http://www.centralsteelfab.com ◆ 2100 Parkes Drive, Broadview, IL 60155
Phone: 708-652-2037 Fax: 708-652-7010

Contents

- CG Series Fish Paper
- CI660X Insulation Channel
- Insulating Channels
- CI6501 Insulating Channel
- CT Series Cable Tag
- Do Not Disconnect Tag
- DCL Labels
- Four Post Clip
- RGB2XXX Series Ground Bar Kit
- RGB4XXX Series Ground Bar Kit
- GBI Series 5” Ground Bar And Kit
- Ground Bar Assembly
- Clear Plexi Glass Cover Assembly [GBI5603 KIT]
- Kit Relay Rack Lug
- IB7300 Series Insulating Bar
- Insulate Stringer
- IS6800 Series Insulating Sheet
- Insulating Pad for UEF Rack
- IP1600 Series Insulating Pad
- IS600 Series Polyester – Fiberglass Insulator
- IWM5601 - Insulate Wall Mounting Angle
- #12-24 OBROUND Jumper Ring
- CR070X Cable Ring For Signal Wire
- NO-OX-ID “A” Special
- Insulating Cross Member
- Floor Base Molding [FBMXX SERIES]
- FBI6701 Insulating Channel
- GB1400 Series 4” Ground Bar And Kit
- Insulating Bushing For 1/4” DIA. Bolt – IB6201
- Insulating Bushing For 3/8” DIA. Bolt – IB6202
- Insulating Bushing For 1/2” DIA. Bolt – IB6203
- Insulating Bushing For 1/2” DIA. Bolt – IB6203M
- Insulating Bushing For 5/8” DIA. Bolt – IB6204
- Insulating Bushing For 3/8” DIA. Bolt – IB6205
- IP8X01 Floor Insulating Kit For Overhead Supported Rack
- Insulating Pad for 19” and 23” Rack
- IVA0127 - Insulating V-Bolt Assembly Kit
- IVA0129 - Insulating V-Bolt Assembly Kit
- Insulating Pads
- Insulating Pads Without Holes
- Insulation Plates
- Special Insulation Pads
- IFM1040EQ Insulation Floor Mounting 23.00” 4 PT EQ

Specifications subject to change. Please contact CSF Customer Service for more information.
© copyright 2004 Central Steel Fabricators, Inc.
http://www.centralsteelfab.com ◆ 2100 Parkes Drive, Broadview, IL 60155
Phone: 708-652-2037 Fax: 708-652-7010

CG Series FISH PAPER

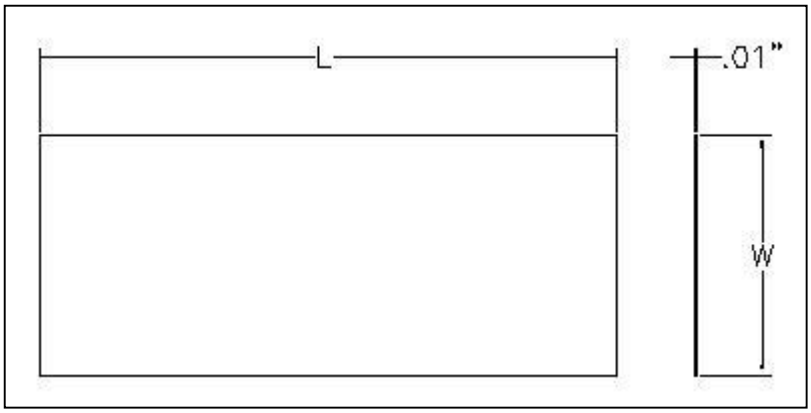

CSF#	L	W
CG120120	120"	12"
CG2540	40"	25"
CG560	25"	10"

NOTES:
-MATERIAL IS IN ROLLS
-MATERIAL COLOR: GRAY

Specifications subject to change. Please contact CSF Customer Service for more information.
© copyright 2004 Central Steel Fabricators, Inc.
http://www.centralsteelfab.com ◆ 2100 Parkes Drive, Broadview, IL 60155
Phone: 708-652-2037 Fax: 708-652-7010

CI660X INSULATING CHANNEL

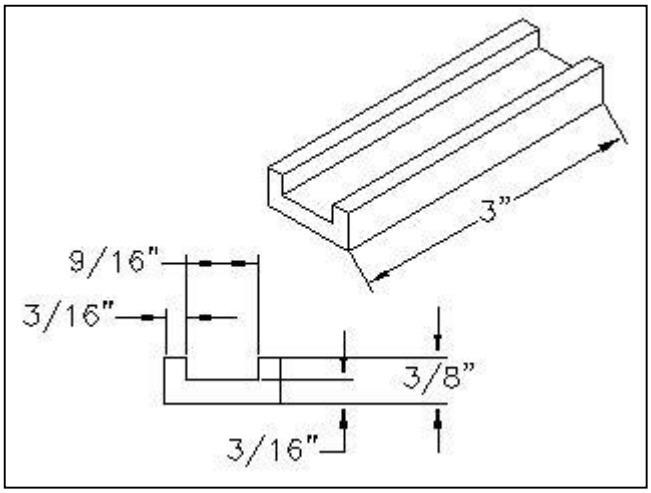

Specifications subject to change. Please contact CSF Customer Service for more information.
© copyright 2004 Central Steel Fabricators, Inc.
http://www.centralsteelfab.com ◆ 2100 Parkes Drive, Broadview, IL 60155
Phone: 708-652-2037 Fax: 708-652-7010

INSULATING CHANNELS

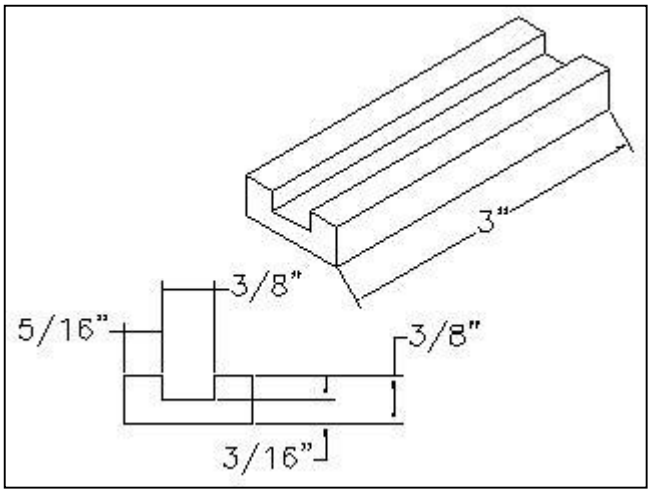

Specifications subject to change. Please contact CSF Customer Service for more information.
© copyright 2004 Central Steel Fabricators, Inc.
http://www.centralsteelfab.com ◆ 2100 Parkes Drive, Broadview, IL 60155
Phone: 708-652-2037 Fax: 708-652-7010

CI6501 INSULATING CHANNEL

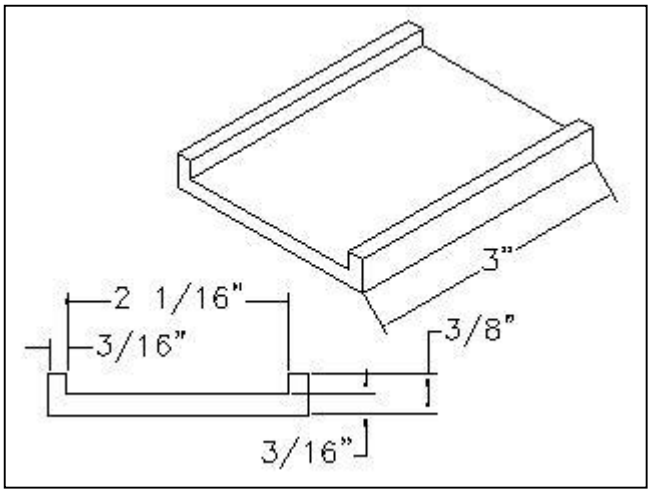

Specifications subject to change. Please contact CSF Customer Service for more information.
© copyright 2004 Central Steel Fabricators, Inc.
http://www.centralsteelfab.com ◆ 2100 Parkes Drive, Broadview, IL 60155
Phone: 708-652-2037 Fax: 708-652-7010

CT Series CABLE TAG

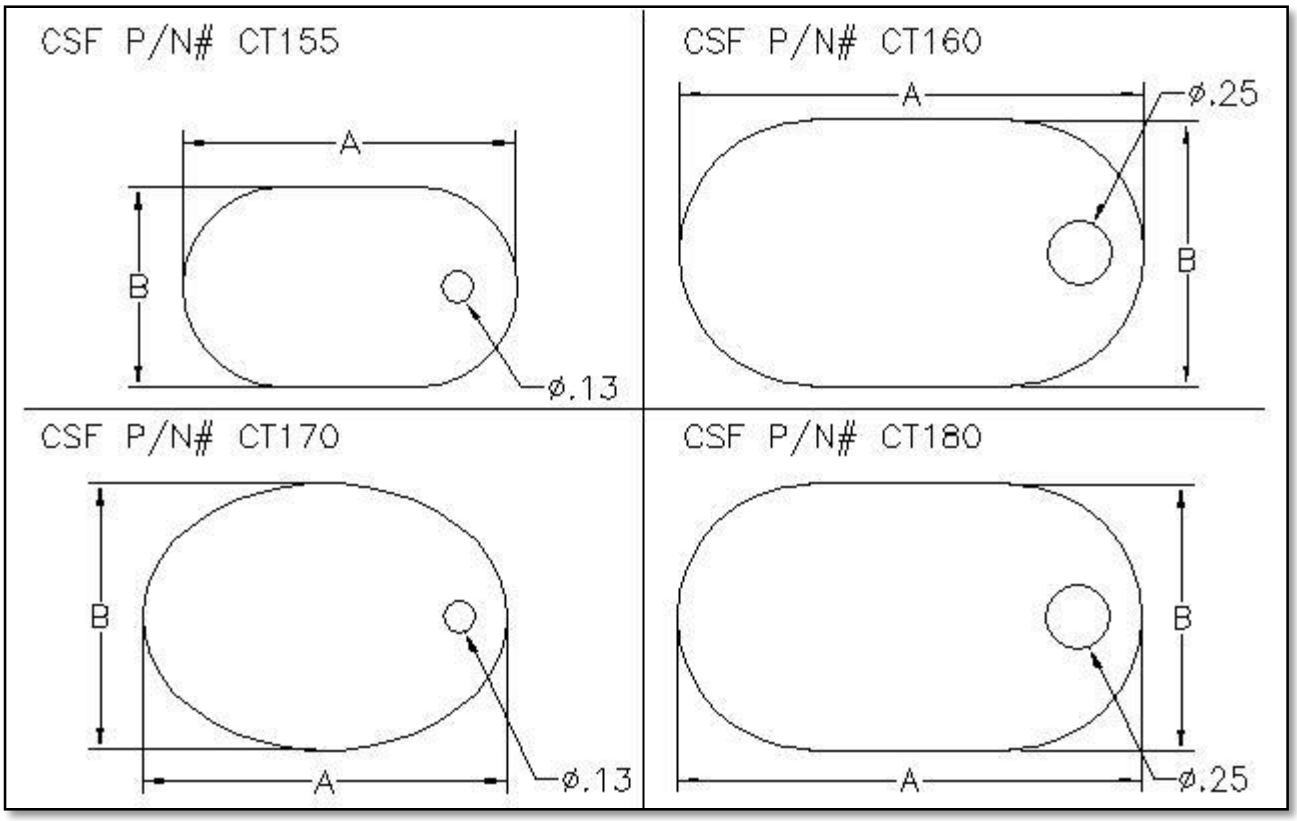

CT Series [CABLE TAG]				
CSF#	A	B	[THK]	MATERIAL
CT155	1.25″	.75″	.06″	FIBER GREY
CT160	1.75″	1.00″	.06″	FIBER GREY
CT170	1.38″	1.00″	.06″	FIBER GREY
CT180	1.75″	1.00″	.06″	WHITE NYLON UL 94V0

RVSD*0415

Specifications subject to change. Please contact CSF Customer Service for more information.

© copyright 2004 Central Steel Fabricators, Inc.
http://www.centralsteelfab.com ◆ 2100 Parkes Drive, Broadview, IL 60155
Phone: 708-652-2037 Fax: 708-652-7010

DO NOT DISCONNECT TAG

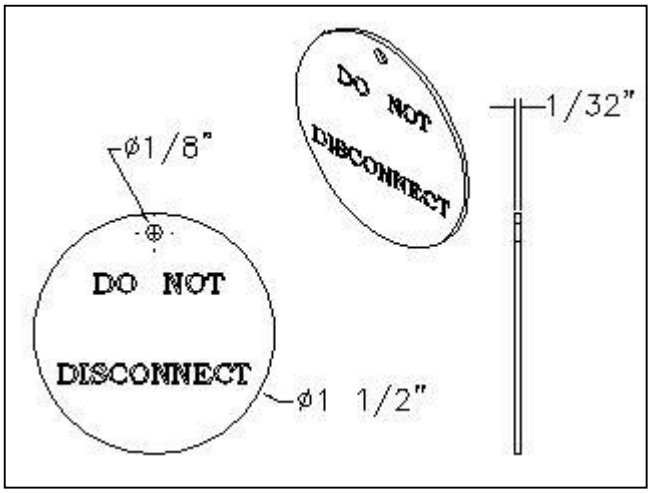

CSF#
CTND15

NOTES:
-TAG IS SOLID BRASS

Specifications subject to change. Please contact CSF Customer Service for more information.
© copyright 2004 Central Steel Fabricators, Inc.
http://www.centralsteelfab.com ◆ 2100 Parkes Drive, Broadview, IL 60155
Phone: 708-652-2037 Fax: 708-652-7010

DCL LABELS

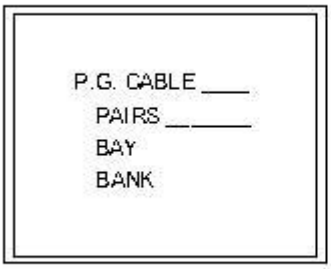

DCL1782C

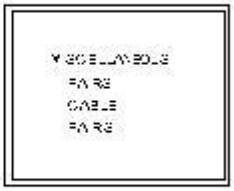

DCL1782D

Specifications subject to change. Please contact CSF Customer Service for more information.
© copyright 2004 Central Steel Fabricators, Inc.
http://www.centralsteelfab.com ◆ 2100 Parkes Drive, Broadview, IL 60155
Phone: 708-652-2037 Fax: 708-652-7010

FOUR POST CLIP

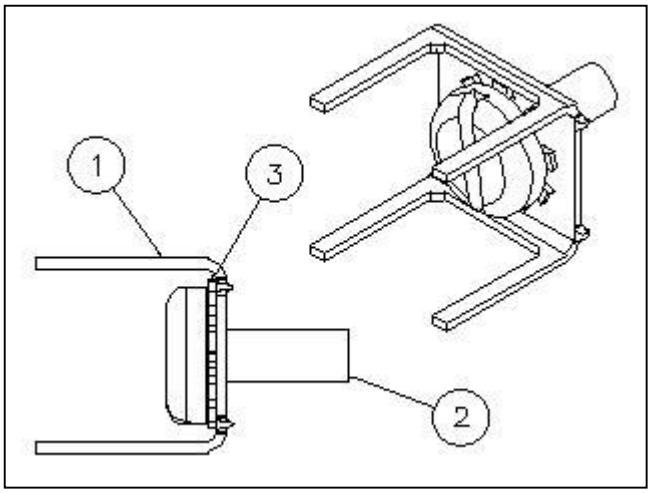

FPC1K			
ITEM#	CSF#	QTY	DESCRIPTION
1	FPC-2	1	FOUR POST CLIP
2	PH0402	1	7/16" PAN HEAD SCREW
3	LWE153	1	EXT. TOOTH LOCKWASHER

Specifications subject to change. Please contact CSF Customer Service for more information.
© copyright 2004 Central Steel Fabricators, Inc.
http://www.centralsteelfab.com ◆ 2100 Parkes Drive, Broadview, IL 60155
Phone: 708-652-2037 Fax: 708-652-7010

RGB2XXX Series [GROUND BAR KIT]

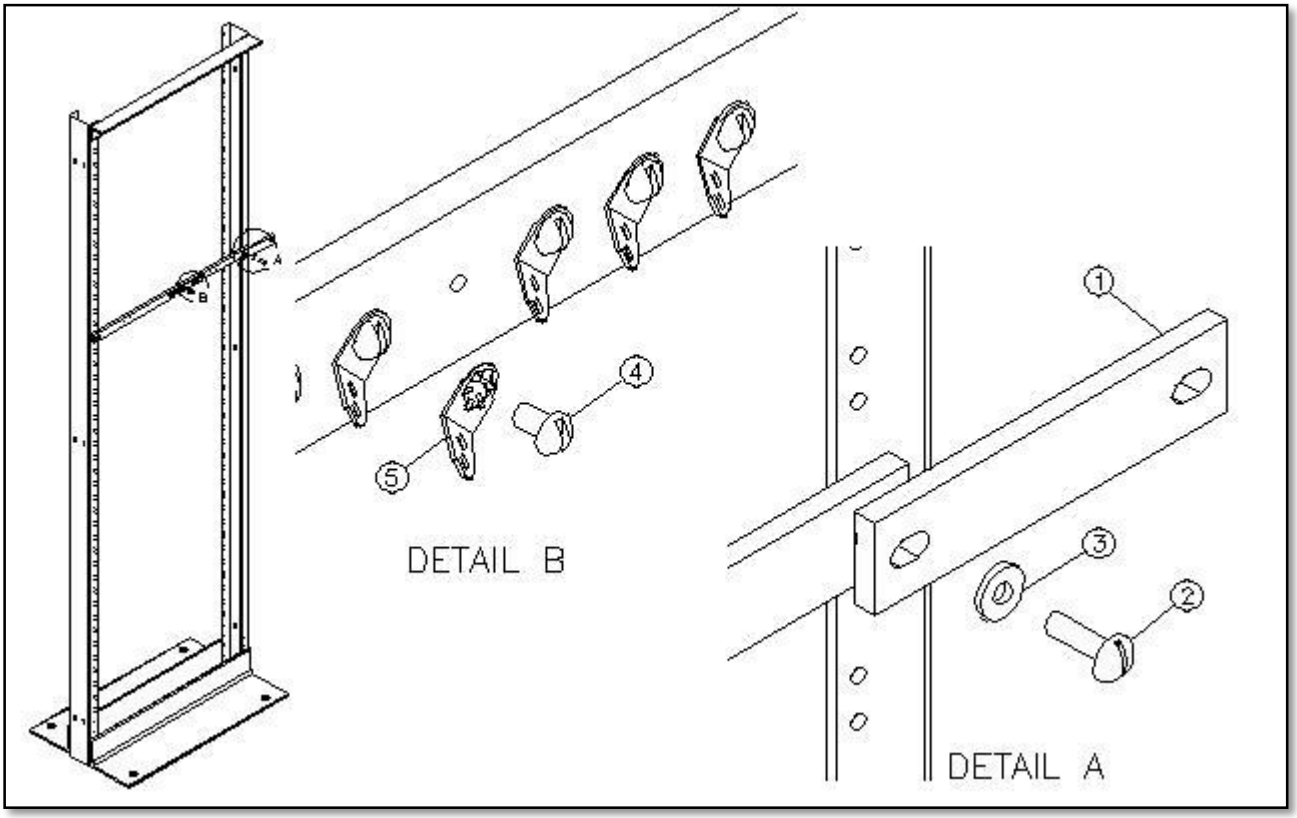

1/4"X1.00"X19.00" GROUNDING BAR KIT		
RGB2801		
ITEM	CSF#	DESCRIPTION
1	GB14119	GROUND BAR & SPLICE
2	SR12-24X750CU	12-24 R.H.M.S.
3	FW12CU	#12 FLATWASHER
4	SR6-32X250CU	6-32 R.H.M.S.
5	505-144MT	LUG

1/4"X1.00"X23.00" GROUND BAR KIT		
RGB2901		
ITEM	CSF#	DESCRIPTION
1	GB14123	GROUND BAR & SPLICE
2	SR12-24X750CU	12-24 R.H.M.S.
3	FW12CU	#12 FLATWASHER
4	SR6-32X250CU	6-32 R.H.M.S.
5	505-144MT	LUG

NOTES:
-ALL HARDWARE IS COPPER PLATED

RVSD*0911

Specifications subject to change. Please contact CSF Customer Service for more information.

© copyright 2004 Central Steel Fabricators, Inc.
http://www.centralsteelfab.com ◆ 2100 Parkes Drive, Broadview, IL 60155
Phone: 708-652-2037 Fax: 708-652-7010

RGB4XXX Series [GROUND BAR KIT]

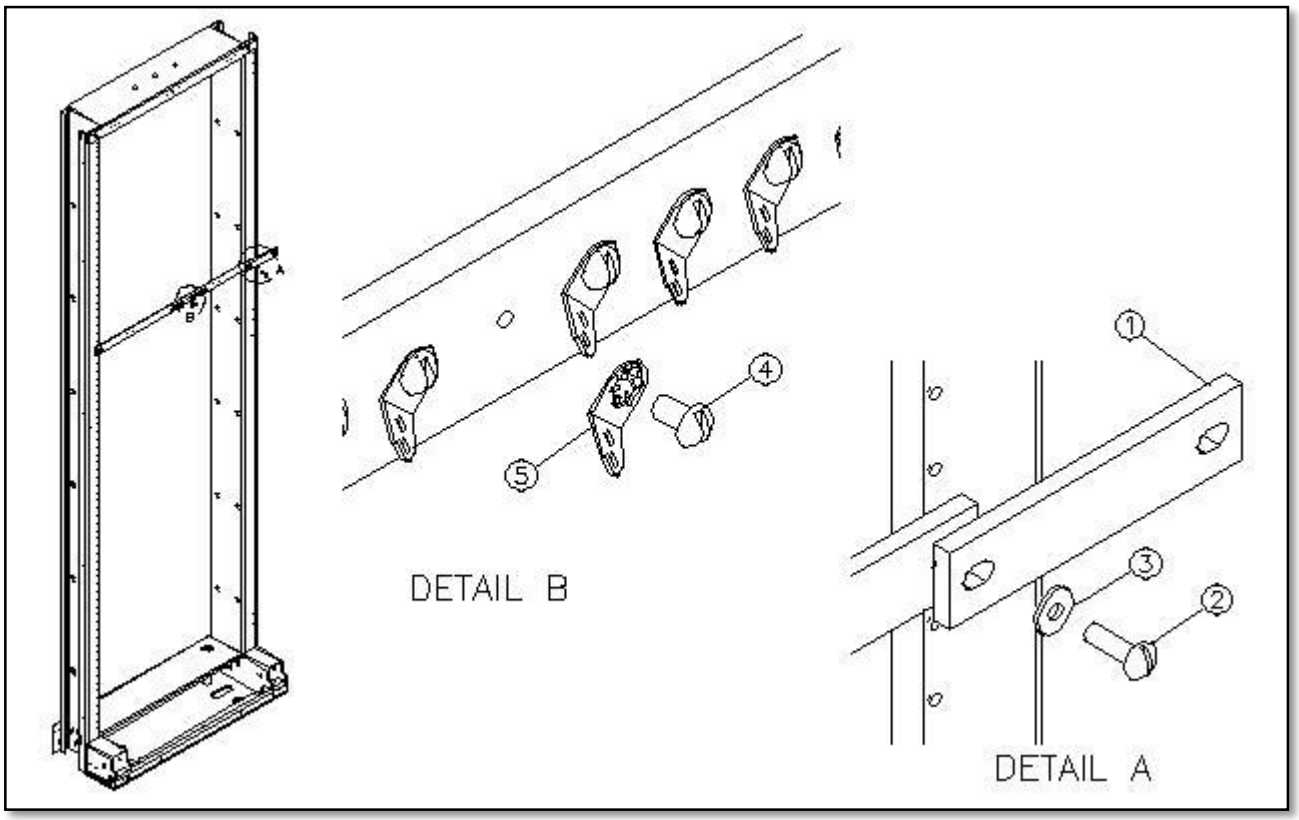

1/4" X 1.00" X 19.00" GROUNDING BAR KIT		
RGB4119		
ITEM	CSF#	DESCRIPTION
1	GB14119	GROUND BAR & SPLICE
2	SR12-24X750CU	12-24 R.H.M.S.
3	FW12CU	#12 FLATWASHER
4	SR6-32X250CU	6-32 R.H.M.S.
5	505-144MT	LUG

1/4" X1.00" X23.00" GROUND BAR KIT		
RGB4123		
ITEM	CSF#	DESCRIPTION
1	GB14123	GROUND BAR & SPLICE
2	SR12-24X750CU	12-24 R.H.M.S.
3	FW12CU	#12 FLATWASHER
4	SR6-32X250CU	6-32 R.H.M.S.
5	505-144MT	LUG

NOTES:
-ALL HARDWARE IS COPPER PLATED

Specifications subject to change. Please contact CSF Customer Service for more information.
© copyright 2004 Central Steel Fabricators, Inc.
http://www.centralsteelfab.com ◆ 2100 Parkes Drive, Broadview, IL 60155
Phone: 708-652-2037 Fax: 708-652-7010

GBI Series 5” GROUND BAR AND KIT

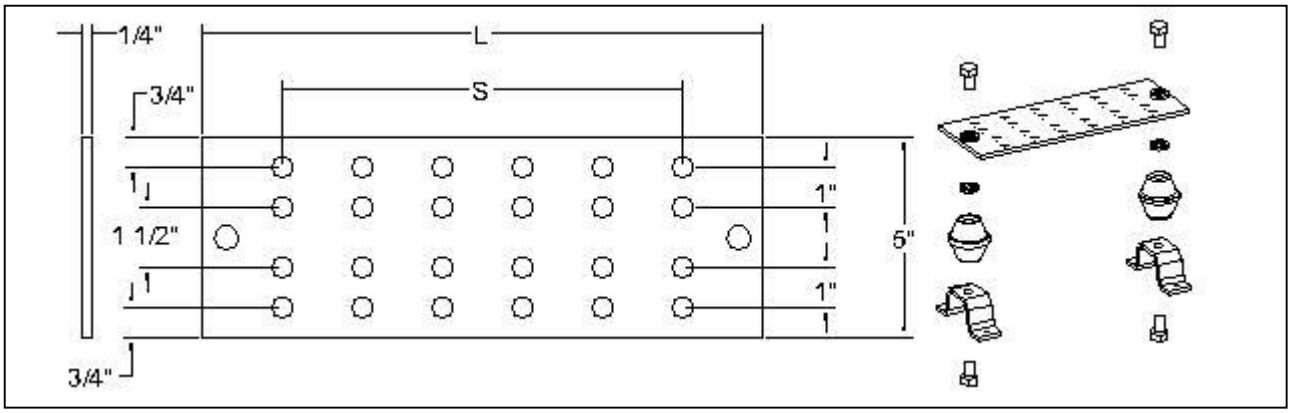

KIT CSF#	BAR CSF#	L	S
GBI512	GB145125	12 1/2"	7
GBI514	GB14514	14"	5
GBI536	GB14536	36"	15

NOTES:
-FOR HARDWARE KIT ONLY (GBI HDWR)

Specifications subject to change. Please contact CSF Customer Service for more information.
© copyright 2004 Central Steel Fabricators, Inc.
http://www.centralsteelfab.com ◆ 2100 Parkes Drive, Broadview, IL 60155
Phone: 708-652-2037 Fax: 708-652-7010

GROUND BAR ASSEMBLY

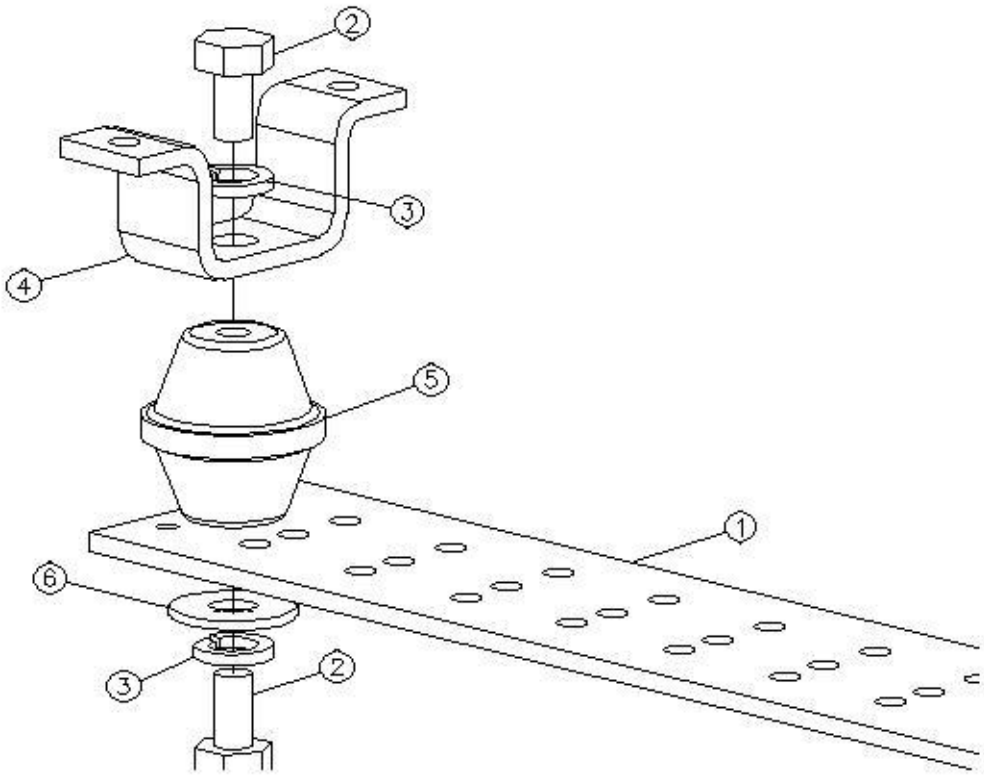

GBI5601			
ITEM#	CSF#	QTY	DESCRIPTION
1	GB14420	1	COPPER GROUND BAR
2	HH1201	4	5/8"-11 HEX HEAD
3	LW158	4	5/8" SPRING LOCKWASHER
4	IS614	2	5/8"-11 INSULATOR
5	CHB1	2	CEILING HANGER BRACKET
6	FW168	2	5/8” FLAT WASHER ZY

Specifications subject to change. Please contact CSF Customer Service for more information.
© copyright 2004 Central Steel Fabricators, Inc.
http://www.centralsteelfab.com ◆ 2100 Parkes Drive, Broadview, IL 60155
Phone: 708-652-2037 Fax: 708-652-7010

GBI5603 - GROUND BAR ASSEMBLY + PLEXIGLASS COVER KIT

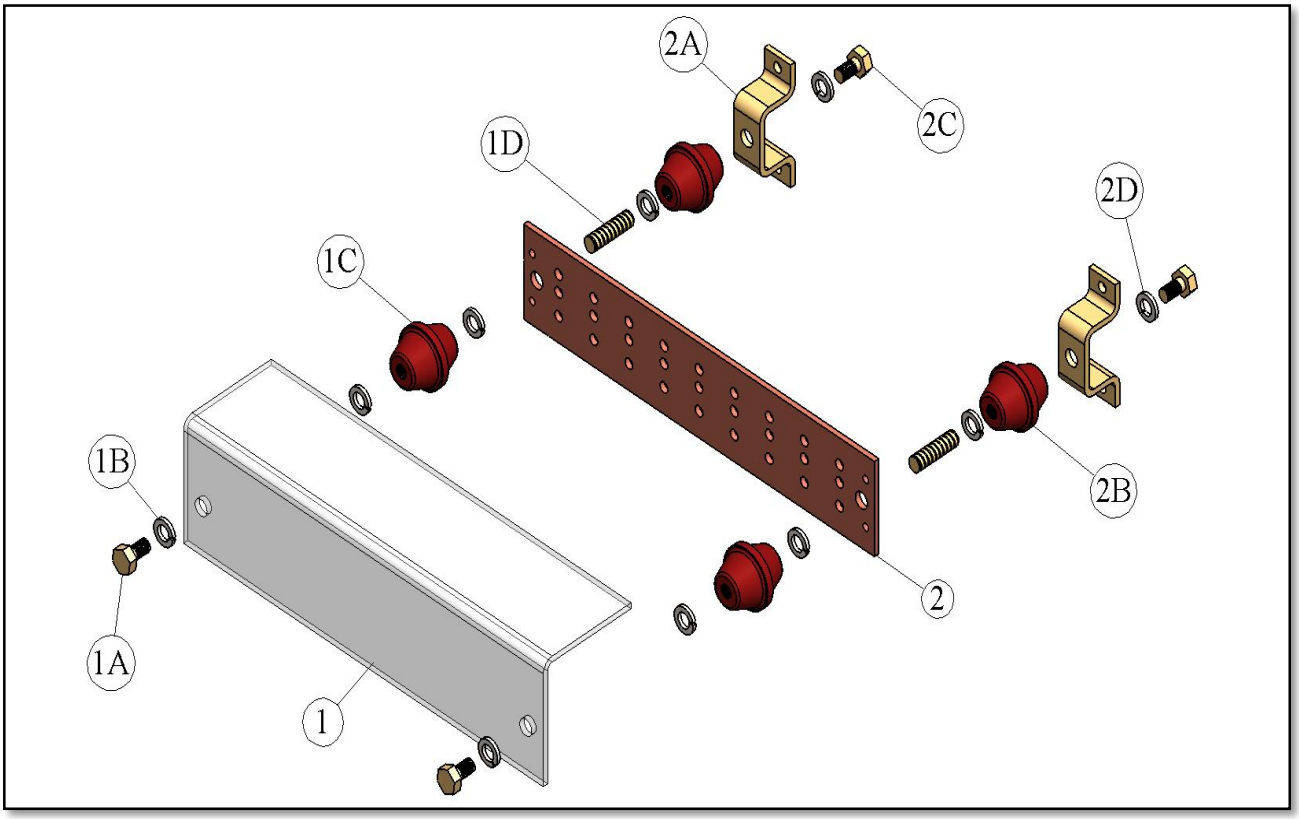

PLC5601 - PLEXIGLASS COVER KIT			
ITEM#	CSF#	QTY	DESCRIPTION
1	PGC5520	1	5.00” X 5.00” X 20.50” LG. - PLEXI GLASS COVER
PLC KIT – PLEXIGLASS COVER HARDWARE			
1A	HH1201	2	5/8-11 HHCS X 1.00” – ZY
1B	LW158	6	5/8” SPRING LOCKWASHER –ZY
1C	IS614	2	5/8” THREADED - INSULATOR STANDOFF
1D	TR48	2	5/8-11 THREADED ROD X 2.25” – ZY

GBI5601 – GROUND BAR ASSEMBLY			
ITEM#	CSF#	QTY	DESCRIPTION
2	GB14420	1	4.00” X 20.00” X 1/4” THK – COOPER GROUND BUS BAR
GBI HARDWARE – GROUND BAR HARDWARE KIT			
2A	CHB1	2	CEILING HANGER BRACKET
2B	IS614	2	5/8” THREADED - INSULATOR STANDOFF
2C	HH1201	4	5/8-11 HHCS X 1.00” – ZY
2D	LW158	4	5/8” SPRING LOCKWASHER -ZY
2E	FW168	2	5/8” FLAT WASHER, 1.75” O.D – ZY [NOT SHOWN]

© copyright 2004 Central Steel Fabricators, Inc.
http://www.centralsteelfab.com ◆ 2100 Parkes Drive, Broadview, IL 60155
Phone: 708-652-2037 Fax: 708-652-7010

KIT RELAY RACK LUG

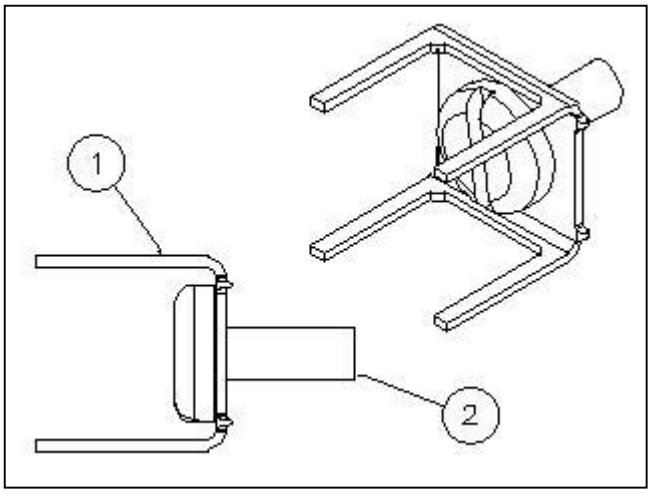

GLK-1			
ITEM #	CSF#	QTY	DESCRIPTION
1	FPC-2	1	FOUR POST CLIP
2	PH0402	1	7/16" PAN HEAD SCREW

Specifications subject to change. Please contact CSF Customer Service for more information.
© copyright 2004 Central Steel Fabricators, Inc.
http://www.centralsteelfab.com ◆ 2100 Parkes Drive, Broadview, IL 60155 ◆
Phone: 708-652-2037 Fax: 708-652-7010

IB7300 Series INSULATING BAR

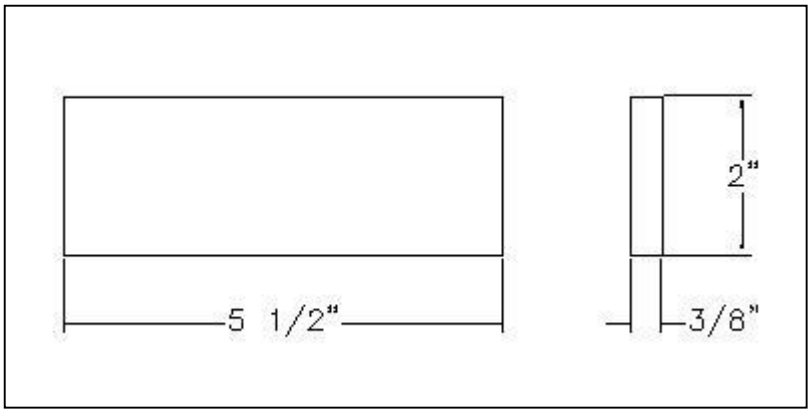

CSF#	H
IB7301	1 1/2"
IB7302	2"

NOTES:
-MATERIAL: RED GP03

Specifications subject to change. Please contact CSF Customer Service for more information.
© copyright 2004 Central Steel Fabricators, Inc.
http://www.centralsteelfab.com ◆ 2100 Parkes Drive, Broadview, IL 60155
Phone: 708-652-2037 Fax: 708-652-7010

INSULATE STRINGER

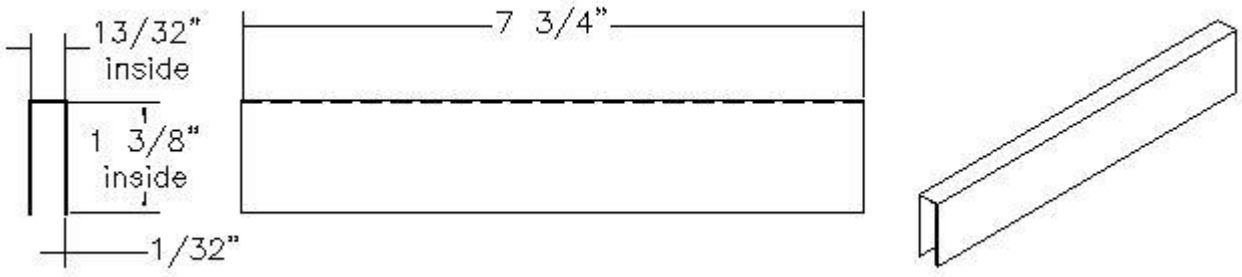

CSF#	DESCRIPTION
ICS775	PLASTIC INSULATION STRIP FOR STRINGER

NOTES:
-FINISH: GRAY

Specifications subject to change. Please contact CSF Customer Service for more information.
© copyright 2004 Central Steel Fabricators, Inc.
http://www.centralsteelfab.com ◆ 2100 Parkes Drive, Broadview, IL 60155
Phone: 708-652-2037 Fax: 708-652-7010

IS6800 Series INSULATING SHEET

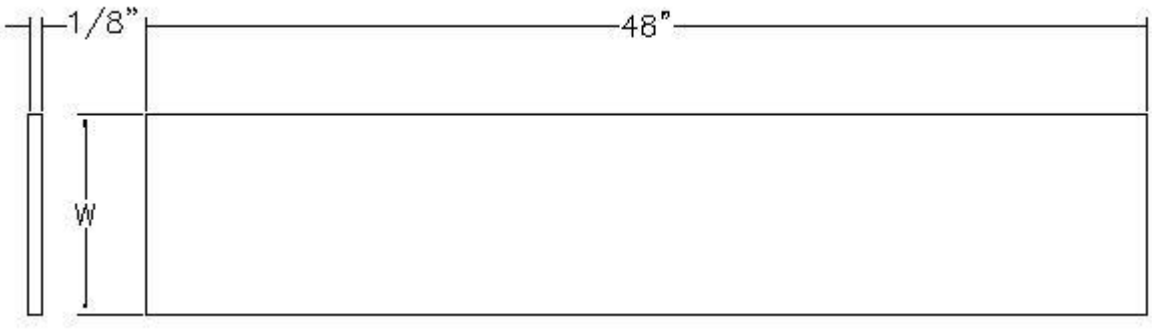

CSF#	W
IS6801	3"
IS6802	4 1/2"
IS6803	6"
IS6804	12"
IS6805	15"
IS6806	16"
IS6807	18"
IS6808	24"

MATERIAL:RED GP03

Specifications subject to change. Please contact CSF Customer Service for more information.

© copyright 2004 Central Steel Fabricators, Inc.
http://www.centralsteelfab.com ◆ 2100 Parkes Drive, Broadview, IL 60155
Phone: 708-652-2037 Fax: 708-652-7010

INSULATING PAD FOR UEF RACK

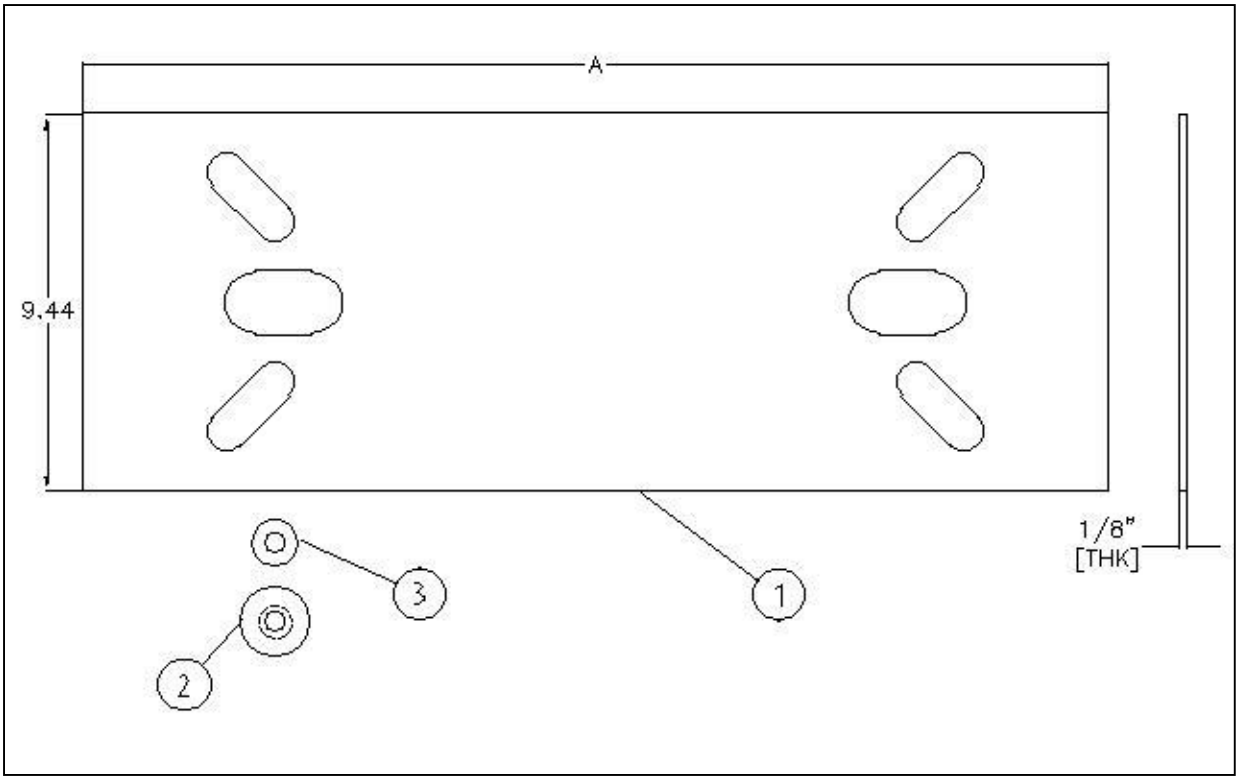

INSULATING PAD FOR 19.00" UEF RACK		
IP1701		
ITEM#	CSF#	QTY
1	IP9131	1
2	IB6203	4
3	FW167	4

INSULATING PAD FOR 23.00" UEF RACK		
IP1801		
ITEM#	CSF#	QTY
1	IP9132	1
2	IB6203	4
3	FW167	4

NOTES:
-MATERIAL: 1/8" RED GP03
-A=21 11/16" FOR IP1701
-A=25 11/16 FORIP1801

RVSD*0611

Specifications subject to change. Please contact CSF Customer Service for more information.
© copyright 2004 Central Steel Fabricators, Inc.
http://www.centralsteelfab.com ◆ 2100 Parkes Drive, Broadview, IL 60155
Phone: 708-652-2037 Fax: 708-652-7010

IP1600 Series INSULATING PAD

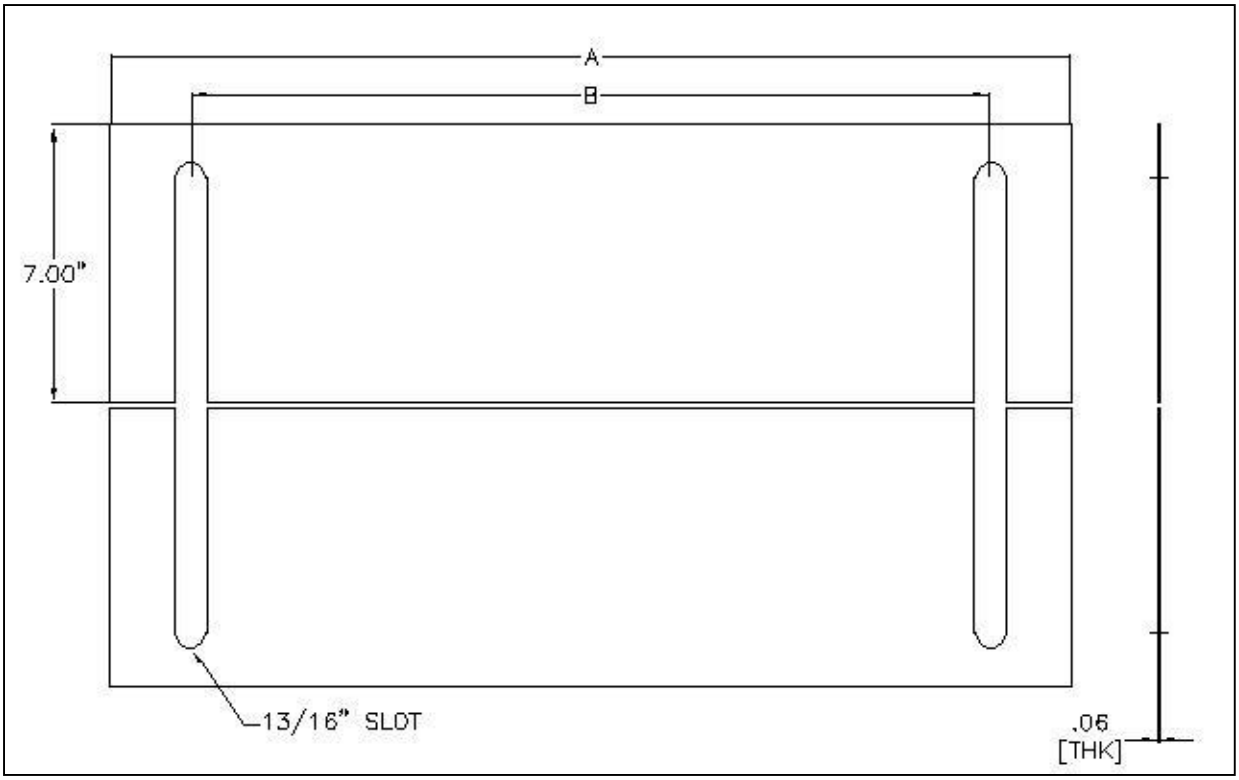

CSF#	A	B	DESCRIPTION
IP1603	20 1/16"	16"	INSULATING PAD FOR 19"
IP1604	24 1/16"	20"	INSULATING PAD FOR 23"

NOTES:
-MATERIAL: 1/16" THICK AND RED GP03

RVSD*0611

Specifications subject to change. Please contact CSF Customer Service for more information.

© copyright 2004 Central Steel Fabricators, Inc.
http://www.centralsteelfab.com ◆ 2100 Parkes Drive, Broadview, IL 60155
Phone: 708-652-2037 Fax: 708-652-7010

IP160XK - INSULATING PAD KIT

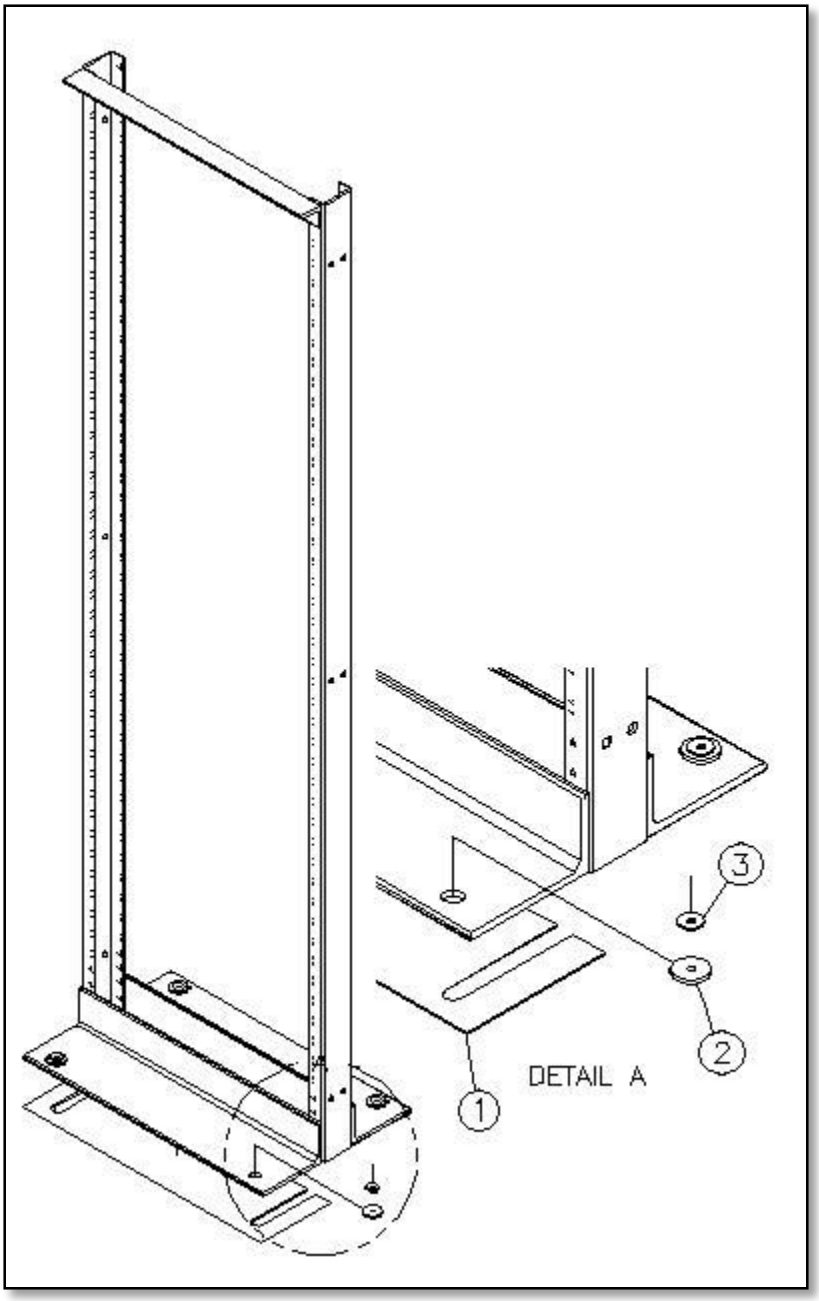

CSF#	DESCRIPTION
IP1603	INSULATING PAD FOR 19.00"
IP1604	INSULATING PAD FOR 23.00"

IP160XK – INSULATING PAD KIT			
ITEM	CSF#	QTY	DESCRIPTION
1	IP160X	2	INSULATING PADS
2	IB6202	4	INSULATING BUSHING FOR 3/8" BOLT
3	FW166	4	FLAT WASHER ZY

Specifications subject to change. Please contact CSF Customer Service for more information.

© copyright 2004 Central Steel Fabricators, Inc.
http://www.centralsteelfab.com ◆ 2100 Parkes Drive, Broadview, IL 60155
Phone: 708-652-2037 Fax: 708-652-7010

IS600 Series POLYESTER - FIBERGLASS INSULATOR

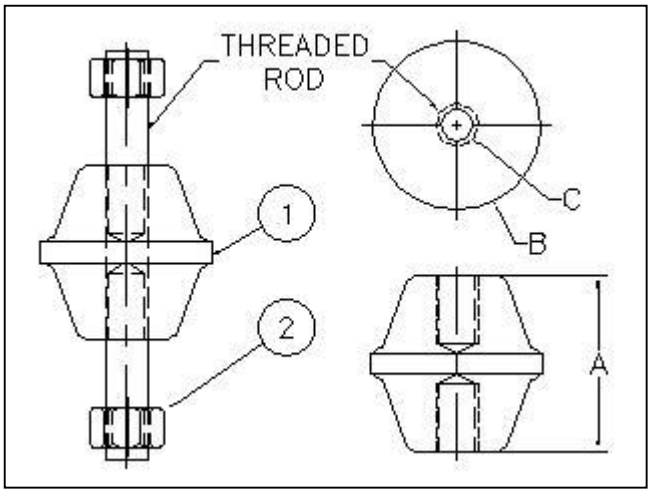

POLYESTER-FIBERGLASS INSULATOR				
IS611-IS614				
CSF#	A	B	C	THREAD
IS611	1-1/2"	2"	1-1/4"	1/4"-20
IS612	1-1/2"	2"	1-1/4"	3/8"-16
IS613	2"	2"	1-1/4"	1/2"-13
IS614	2-5/8"	2-1/2"	1-1/2"	5/8"-11

NOTES:

- INSULATOR SHAPE MAY VARY FROM THAT SHOWN. DIMENSIONS ARE NOMINALS, AND MAY VARY DEPENDING ON SHAPE. THE SHOULDER MAY BE ROUND OR OCTAGON.

FIBERGLASS INSULATOR KITS	
FIK6302	
ITEM#	DESCRIPTION
1	3/8"-16 INSULATOR
2	3/8"-16 HEX NUT
FIK6303	
ITEM#	DESCRIPTION
1	1/2"-13 INSULATOR
2	1/2"-13 HEX NUT
FIK6304	
ITEM#	DESCRIPTION
1	5/8"-11 INSULATOR
2	5/8"-11 HEX NUT

RVSD*0812

Specifications subject to change. Please contact CSF Customer Service for more information.

© copyright 2004 Central Steel Fabricators, Inc.
http://www.centralsteelfab.com ◆ 2100 Parkes Drive, Broadview, IL 60155
Phone: 708-652-2037 Fax: 708-652-7010

IWM5601 - INSULATE WALL MOUNTING ANGLE

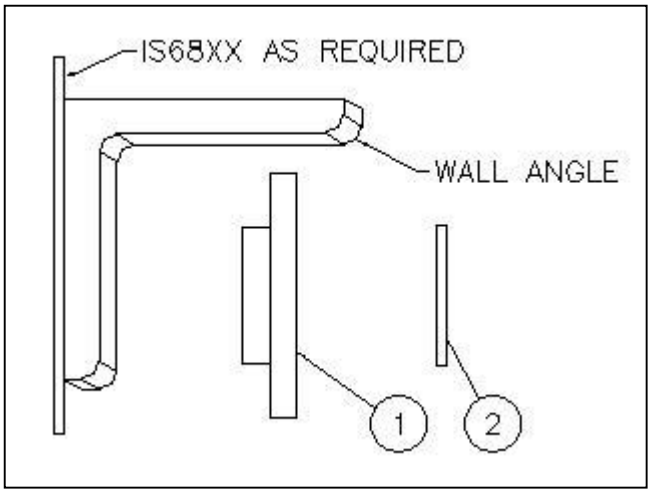

IWM5601		
ITEM#	CSF#	QTY
1	IB6202	1
2	FW166	1

NOTES:
-REQUIRES 3/4" DIA HOLE TO BE DRILLED IN ANGLE

Specifications subject to change. Please contact CSF Customer Service for more information.
© copyright 2004 Central Steel Fabricators, Inc.
http://www.centralsteelfab.com ◆ 2100 Parkes Drive, Broadview, IL 60155
Phone: 708-652-2037 Fax: 708-652-7010

12-24 OBROUND JUMPER RING

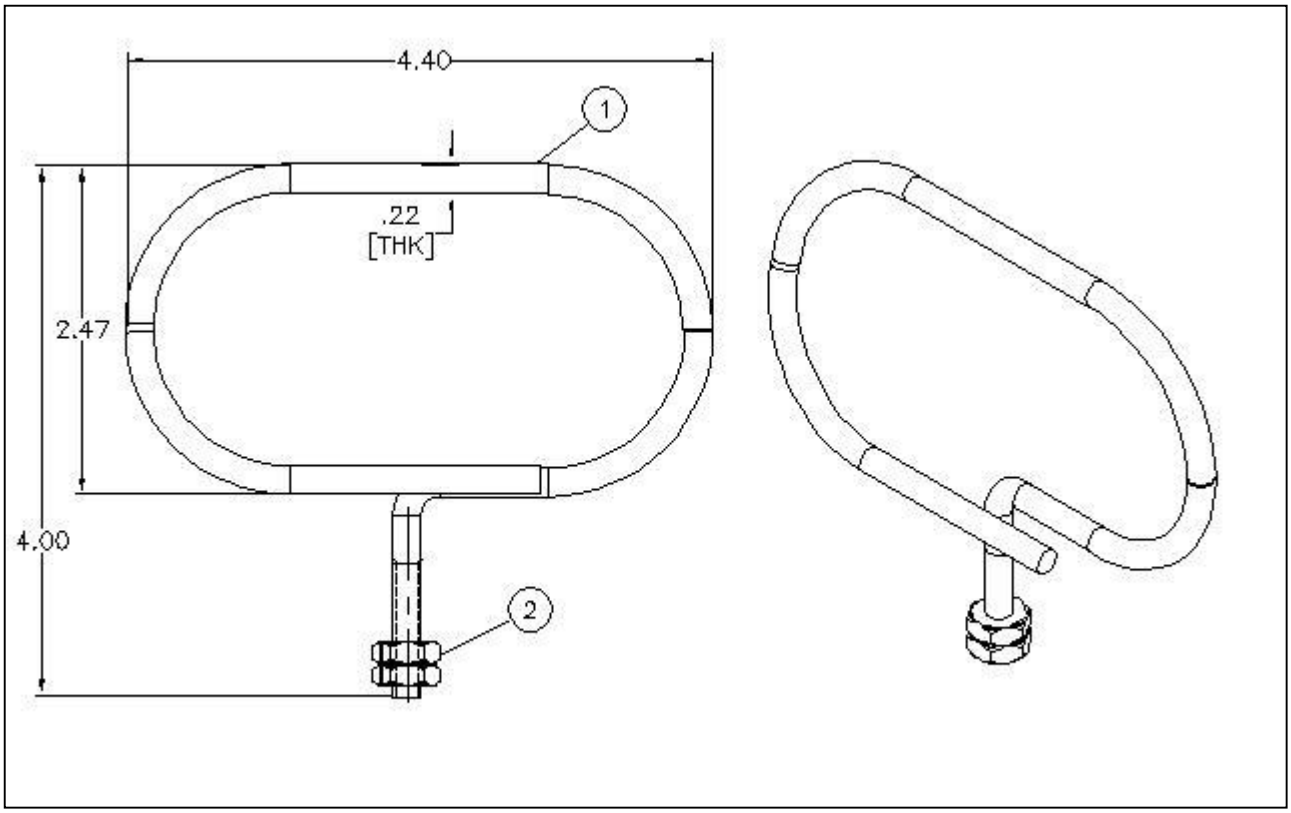

JR5046			
ITEM	CSF#	QTY	DESCRIPTION
1	B1724	1	OBROUND JUMPER RING
2	HN143	2	12-24 HEX NUT

NOTES:
-FINISH: DARK GRAY

Specifications subject to change. Please contact CSF Customer Service for more information.
© copyright 2004 Central Steel Fabricators, Inc.
http://www.centralsteelfab.com ◆ 2100 Parkes Drive, Broadview, IL 60155
Phone: 708-652-2037 Fax: 708-652-7010

CR070X CABLE RING FOR SIGNAL WIRE

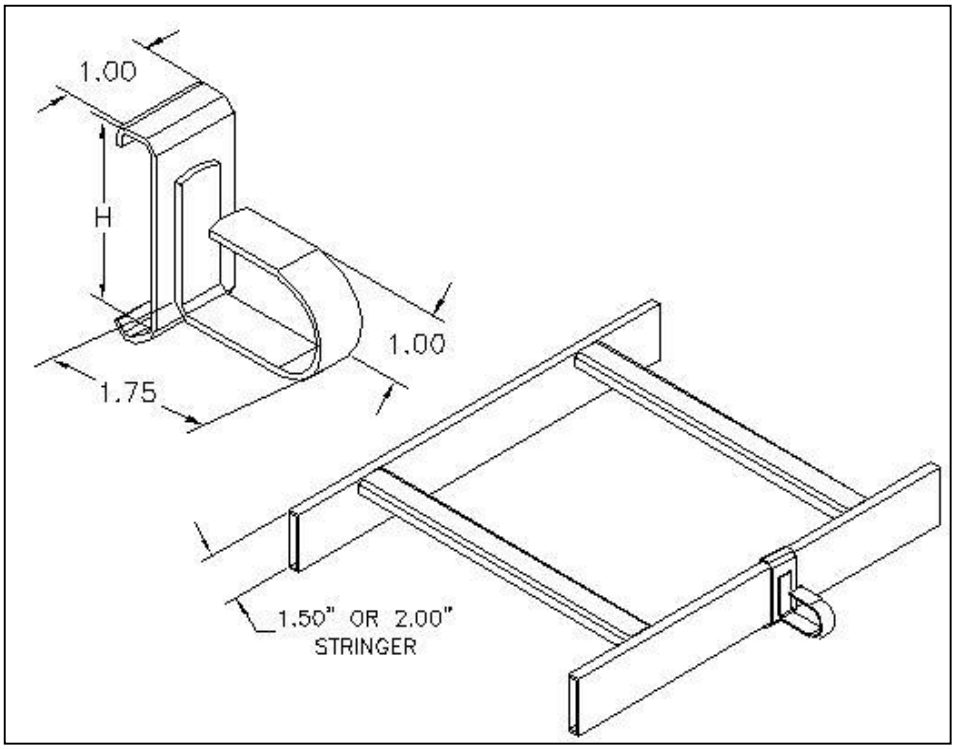

1.50" STRINGER	2.00" STRINGER
CR0701	CR0702

NOTES:
-FINISH: ZINC AND YELLOW
-CABLE RACK NOT INCLUDED

Specifications subject to change. Please contact CSF Customer Service for more information.
© copyright 2004 Central Steel Fabricators, Inc.
http://www.centralsteelfab.com ◆ 2100 Parkes Drive, Broadview, IL 60155
Phone: 708-652-2037 Fax: 708-652-7010

NO-OX-ID "A" SPECIAL

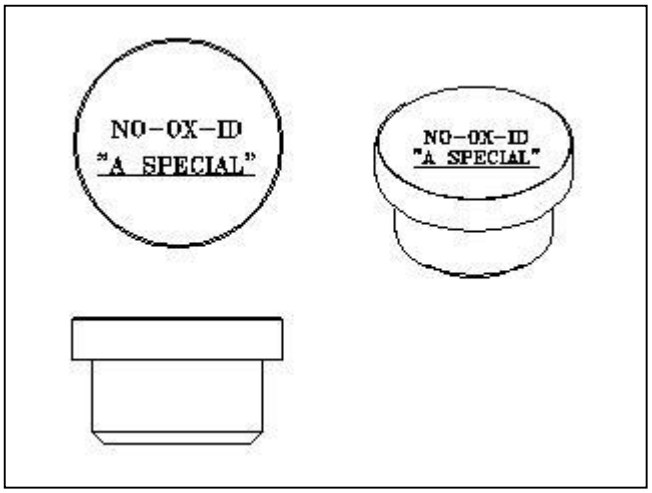

CSF#	DESCRIPTION
NOOX01	CHEMICAL COMPOUND USED TO PREVENT RUST - 1 OZ

Specifications subject to change. Please contact CSF Customer Service for more information.
© copyright 2004 Central Steel Fabricators, Inc.
http://www.centralsteelfab.com ◆ 2100 Parkes Drive, Broadview, IL 60155
Phone: 708-652-2037 Fax: 708-652-7010

INSULATING CROSS MEMBER

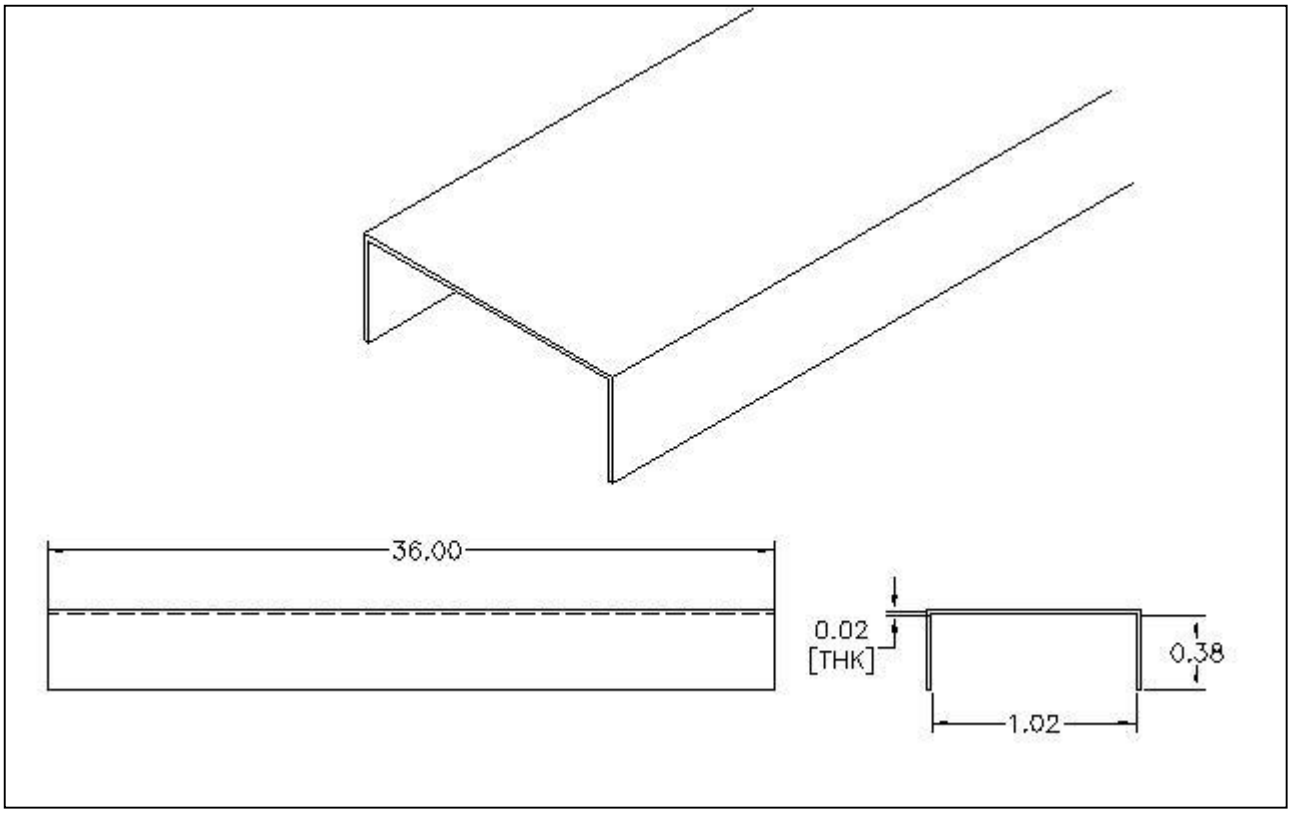

CSF#	DESCRIPTION
ICC136	INSULATING CROSS MEMBER 1.00" X 36.00" X .02 [THK]
MATERIAL COLOR: GREY	

Specifications subject to change. Please contact CSF Customer Service for more information.

© copyright 2004 Central Steel Fabricators, Inc.
http://www.centralsteelfab.com ◆ 2100 Parkes Drive, Broadview, IL 60155
Phone: 708-652-2037 Fax: 708-652-7010

FLOOR BASE MOLDING [FBMXX SERIES]

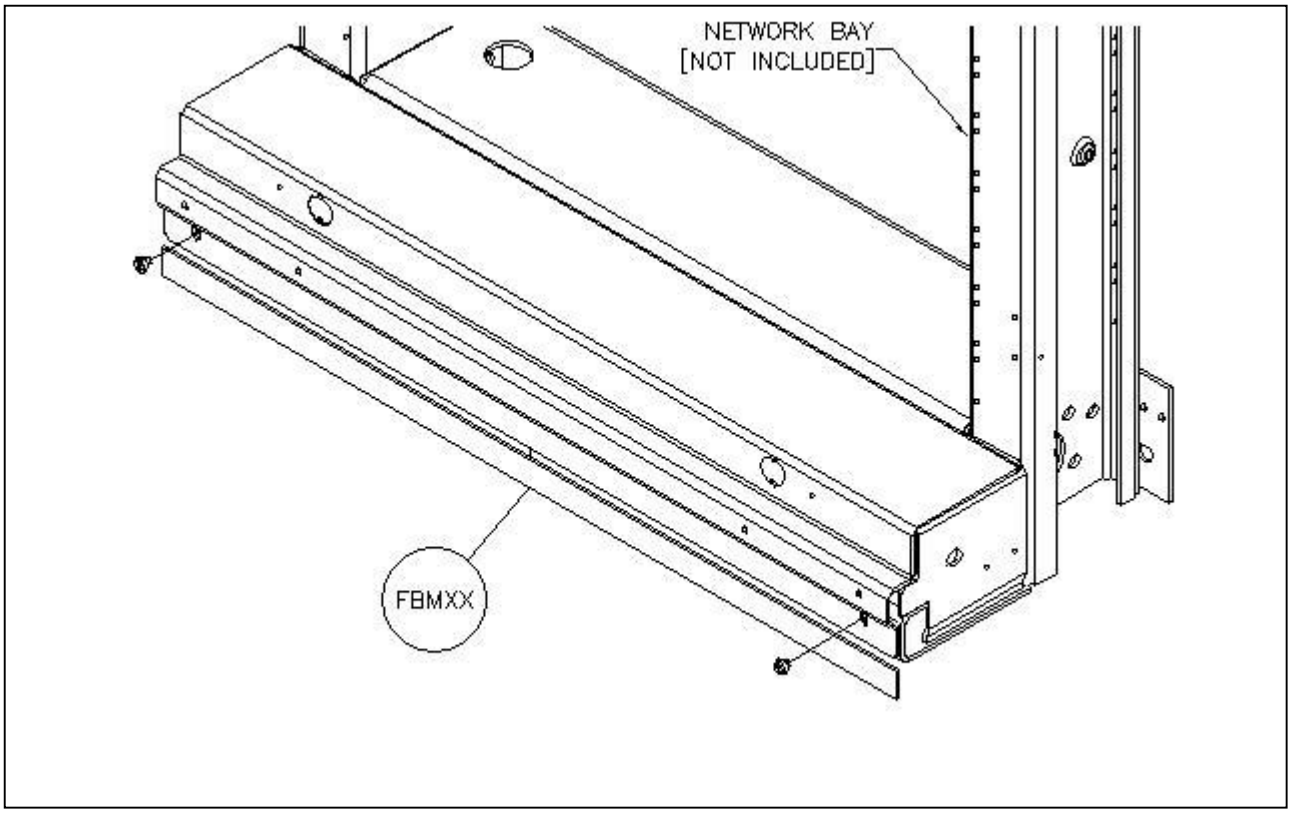

CSF#	DESCRIPTION
FBM26	26.00” X .88” X [.09” THK]
FBM48	48.00” X .88” X [.09” THK]
FBM96	96.00” X .88” X [.09” THK]
MATERIAL COLOR: GREY & BLUE	

Specifications subject to change. Please contact CSF Customer Service for more information.
© copyright 2004 Central Steel Fabricators, Inc.
http://www.centralsteelfab.com ◆ 2100 Parkes Drive, Broadview, IL 60155
Phone: 708-652-2037 Fax: 708-652-7010

FBI6701 INSULATING CHANNEL

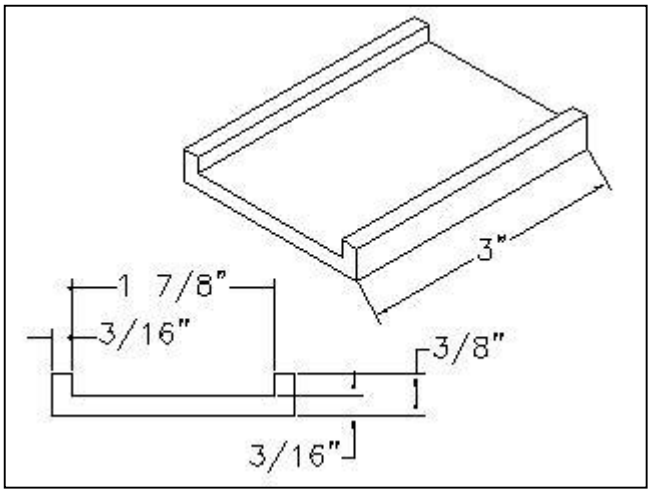

NOTES:
-MATERIAL: GP03 RED

Specifications subject to change. Please contact CSF Customer Service for more information.
© copyright 2004 Central Steel Fabricators, Inc.
http://www.centralsteelfab.com ◆ 2100 Parkes Drive, Broadview, IL 60155
Phone: 708-652-2037 Fax: 708-652-7010

GBI400 Series – 4.00" GROUND BAR AND KIT

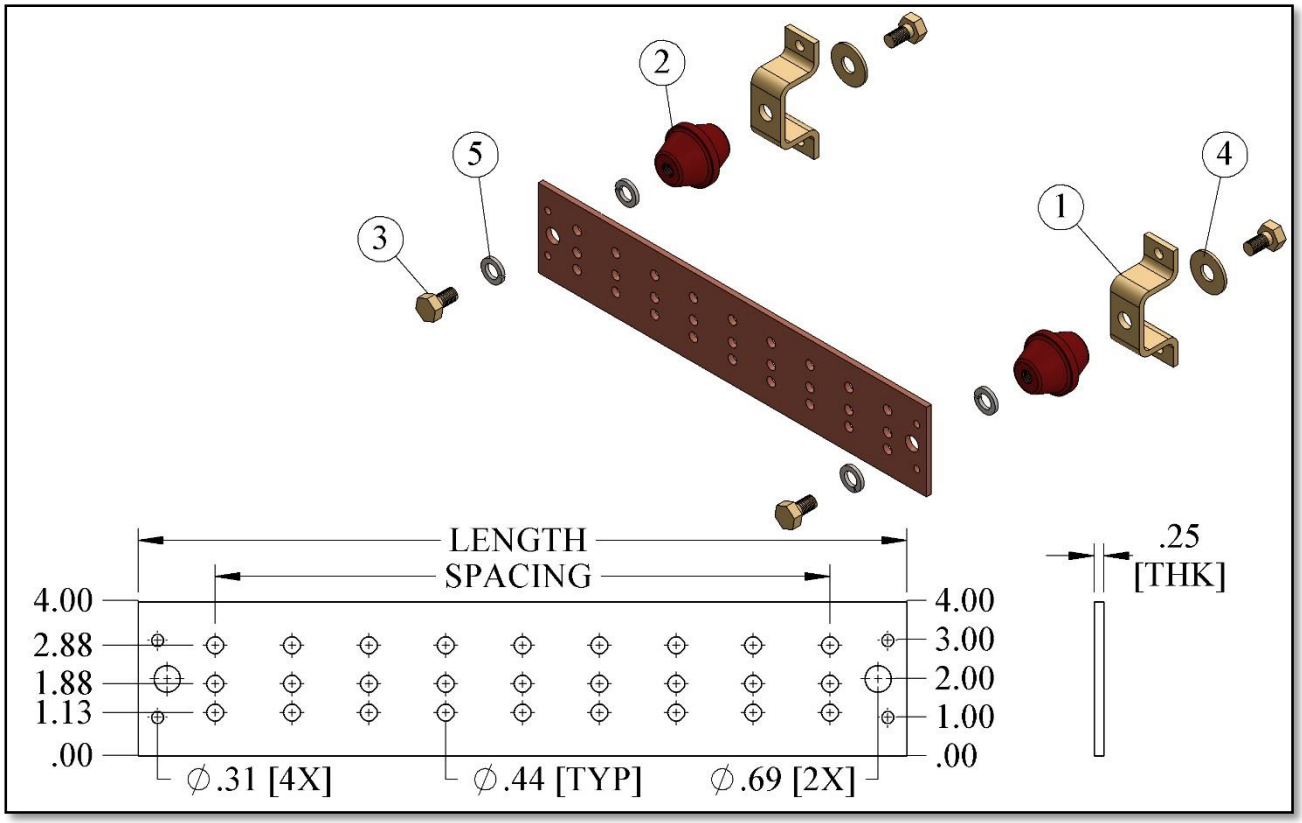

GBI400 SERIES – 4.00" GROUND BAR AND KIT				
CSF KIT#	GROUND BAR - PART NUMBER	LENGTH	SPACING	CSF KIT DESCRIPTION
GBI406	GB14406	6.00"	1 SPC	4.00" X 6.00" COOPER GROUND BAR ASSEMBLY
GBI410M2	GB14410M2	10.00"	3 SPC	4.00" X 10.00" COOPER GROUND BAR ASSEMBLY
GBI412	GB14412	12.00"	4 SPC	4.00" X 12.00" COOPER GROUND BAR ASSEMBLY
GBI416	GB14416	16.00"	6 SPC	4.00" X 16.00" COOPER GROUND BAR ASSEMBLY
GBI418	GB14418	18.00"	7 SPC	4.00" X 18.00" COOPER GROUND BAR ASSEMBLY
GBI5601	GB14420	20.00"	8 SPC	4.00" X 20.00" COOPER GROUND BAR ASSEMBLY
GBI424	GB14424	24.00"	10 SPC	4.00" X 24.00" COOPER GROUND BAR ASSEMBLY
GBI426	GB14426	26.00"	11 SPC	4.00" X 26.00" COOPER GROUND BAR ASSEMBLY
GBI430	GB14430	30.00"	13 SPC	4.00" X 30.00" COOPER GROUND BAR ASSEMBLY
GBI434	GB14434	34.00"	15 SPC	4.00" X 34.00" COOPER GROUND BAR ASSEMBLY
GBI436	GB14436	36.00"	16 SPC	4.00" X 36.00" COOPER GROUND BAR ASSEMBLY
GBI448	GB14448	48.00"	20 SPC	4.00" X 48.00" COOPER GROUND BAR ASSEMBLY
GBI460	GB14460	60.00"	26 SPC	4.00" X 60.00" COOPER GROUND BAR ASSEMBLY

GBI HARDWARE – GROUND BAR ASSEMBLY			
ITEM#	CSF - PART NUMBER	QTY	CSF KIT DESCRIPTION
1	CHB1	2	CEILING HANGER BRACKET
2	IS614	2	5/8" THREADED – INSULATOR STANDOFF
3	HH1201	4	5/8-11 HHCS X 1.00" – ZY
4	FW168	2	5/8" FLAT WASHER, 1.75" O.D. – ZY
5	LW158	4	5/8" SPRING LOCKWASHER – ZY

NOTE: [GBI HARDWARE KIT]
HARDWARE KIT ONLY

© copyright 2004 Central Steel Fabricators, Inc.
http://www.centralsteelfab.com ◆ 2100 Parkes Drive, Broadview, IL 60155
Phone: 708-652-2037 Fax: 708-652-7010

INSULATING BUSHING FOR 3/8" DIA. BOLT - IB6202

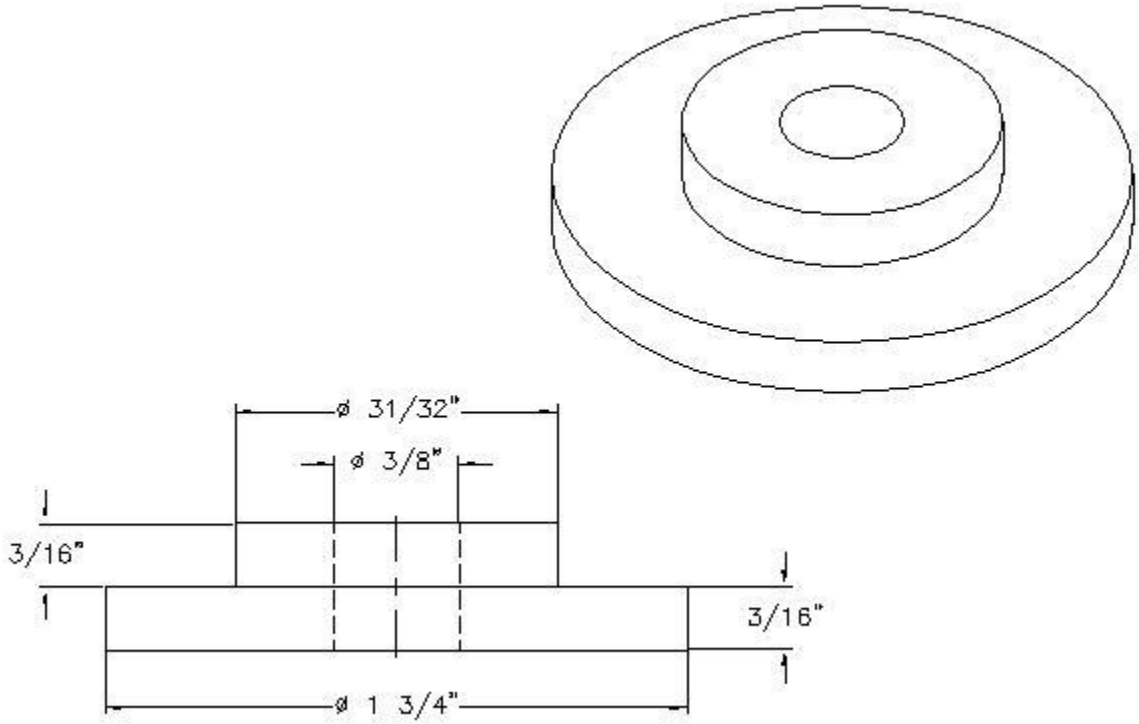

IB6202K4		
ITEM	DESCRIPTION	K4
IB6202	INSULATING BUSHING FOR 3/8" DIA. BOLT	4
FW166	3/8" FLAT WASHER ZY	4

NOTES:
- MATERIAL: GP03
- RATING OF 94 V-1 WITH AN OXYGEN INDEX RATING OF GREATER THAN 29

Specifications subject to change. Please contact CSF Customer Service for more information.
© copyright 2004 Central Steel Fabricators, Inc.
http://www.centralsteelfab.com ◆ 2100 Parkes Drive, Broadview, IL 60155
Phone: 708-652-2037 Fax: 708-652-7010

INSULATING BUSHING FOR 1/2" DIA. BOLT - IB6203

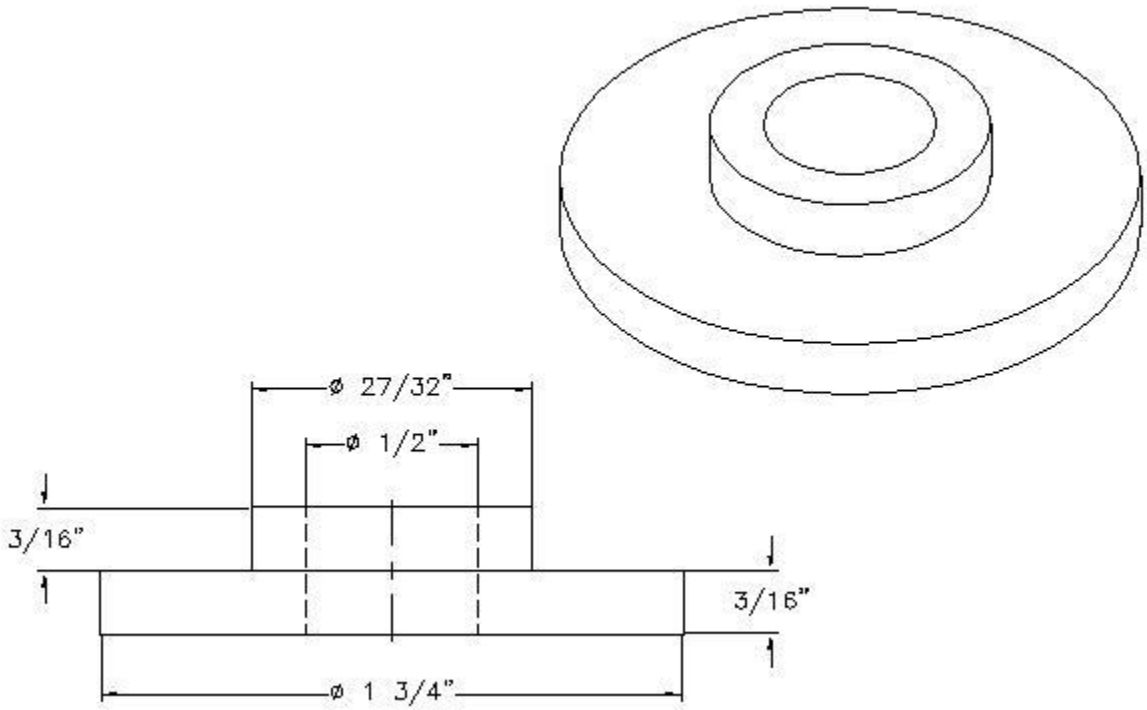

IB6203K4		
ITEM	DESCRIPTION	K4
IB6203	INSULATING BUSHING FOR 1/2" DIA. BOLT	4
FW167	1/2" FLAT WASHER ZY	4

NOTES:
- MATERIAL: GP03
- RATING OF 94 V-1 WITH AN OXYGEN INDEX RATING OF GREATER THAN 29

Specifications subject to change. Please contact CSF Customer Service for more information.
© copyright 2004 Central Steel Fabricators, Inc.
http://www.centralsteelfab.com ◆ 2100 Parkes Drive, Broadview, IL 60155
Phone: 708-652-2037 Fax: 708-652-7010

INSULATING BUSHING FOR 1/2" DIA. BOLT - IB6203M

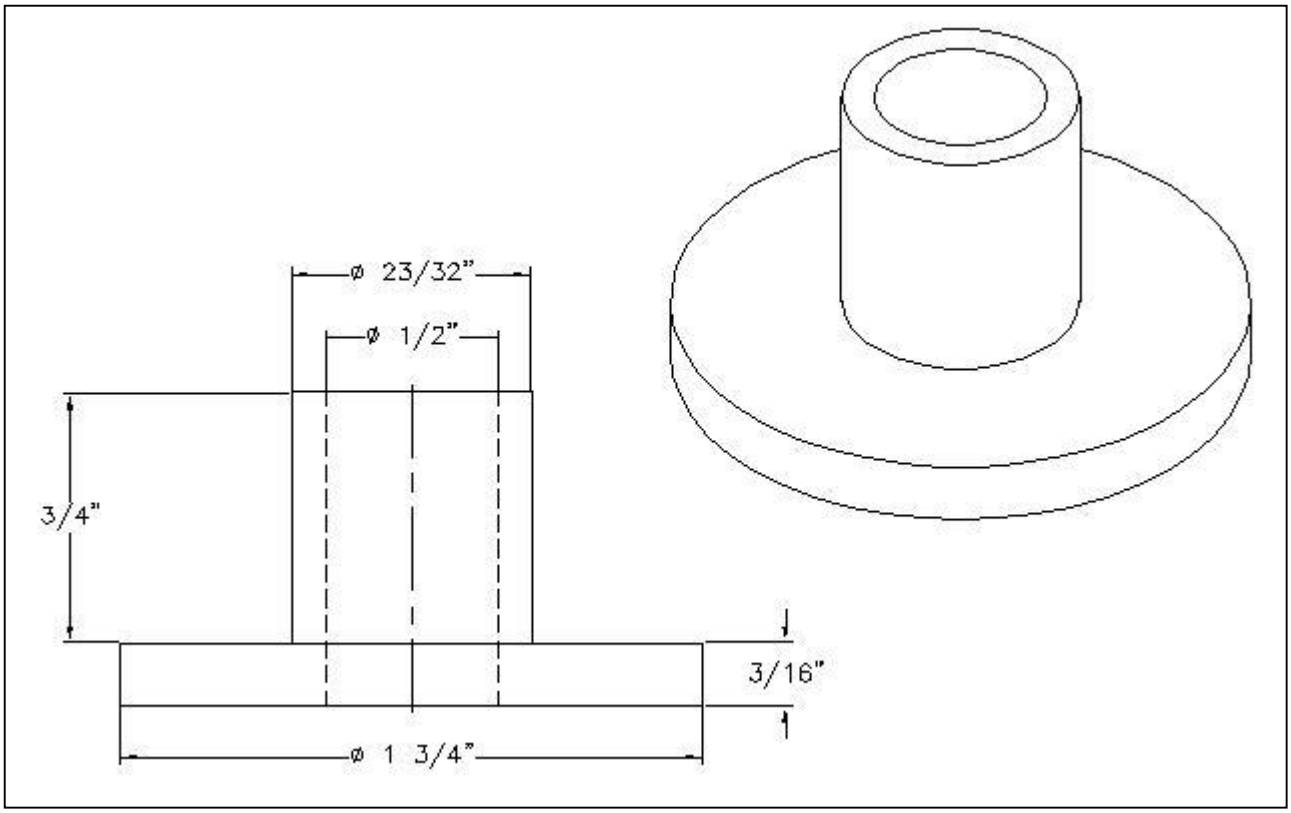

IB6203MK4		
ITEM	DESCRIPTION	K4
IB6203M	INSULATING BUSHING FOR 1/2" DIA. BOLT	4
FW167	1/2" FLAT WASHER ZY	4

NOTES:
- MATERIAL: GP03
- RATING OF 94 V-1 WITH AN OXYGEN INDEX RATING OF GREATER THAN 29

Specifications subject to change. Please contact CSF Customer Service for more information.
© copyright 2004 Central Steel Fabricators, Inc.
http://www.centralsteelfab.com ◆ 2100 Parkes Drive, Broadview, IL 60155
Phone: 708-652-2037 Fax: 708-652-7010

INSULATING BUSHING FOR 5/8" DIA. BOLT - IB6204

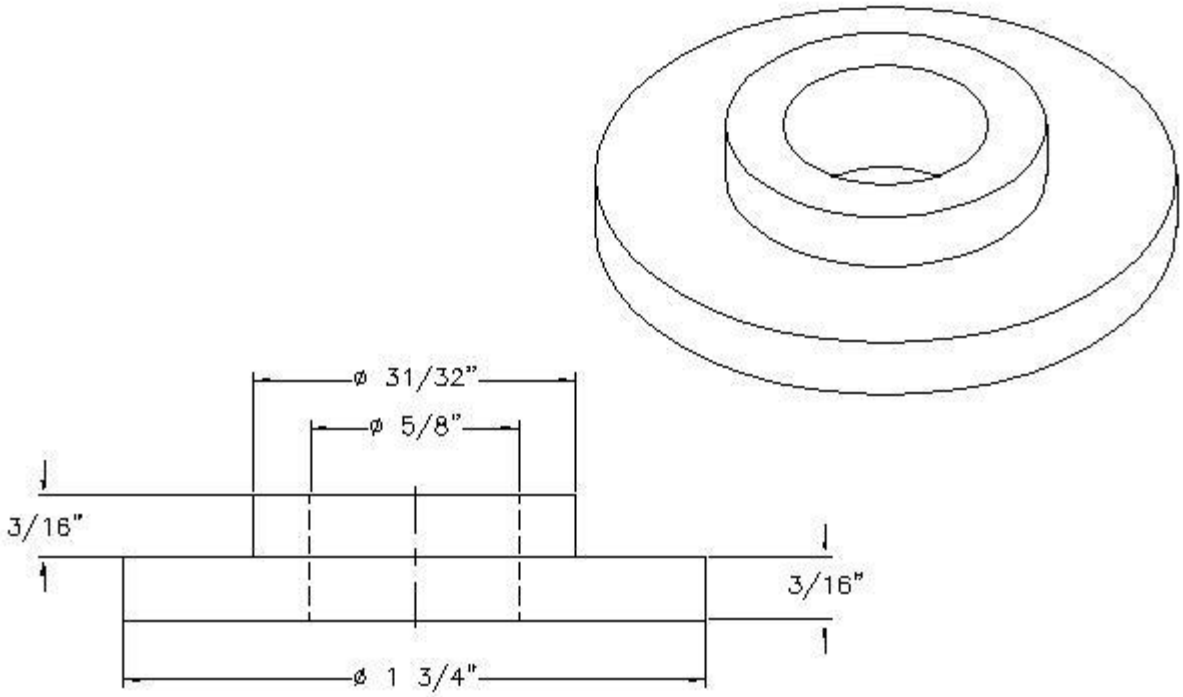

IB6204K4		
ITEM	DESCRIPTION	K4
IB6204	INSULATING BUSHING FOR 5/8" DIA. BOLT	4
FW168	5/8" FLAT WASHER ZY	4

NOTES:
- MATERIAL: GP03
- RATING OF 94 V-1 WITH AN OXYGEN INDEX RATING OF GREATER THAN 29

Specifications subject to change. Please contact CSF Customer Service for more information.
© copyright 2004 Central Steel Fabricators, Inc.
http://www.centralsteelfab.com ◆ 2100 Parkes Drive, Broadview, IL 60155
Phone: 708-652-2037 Fax: 708-652-7010

INSULATING BUSHING FOR 3/8" DIA. BOLT- IB6205

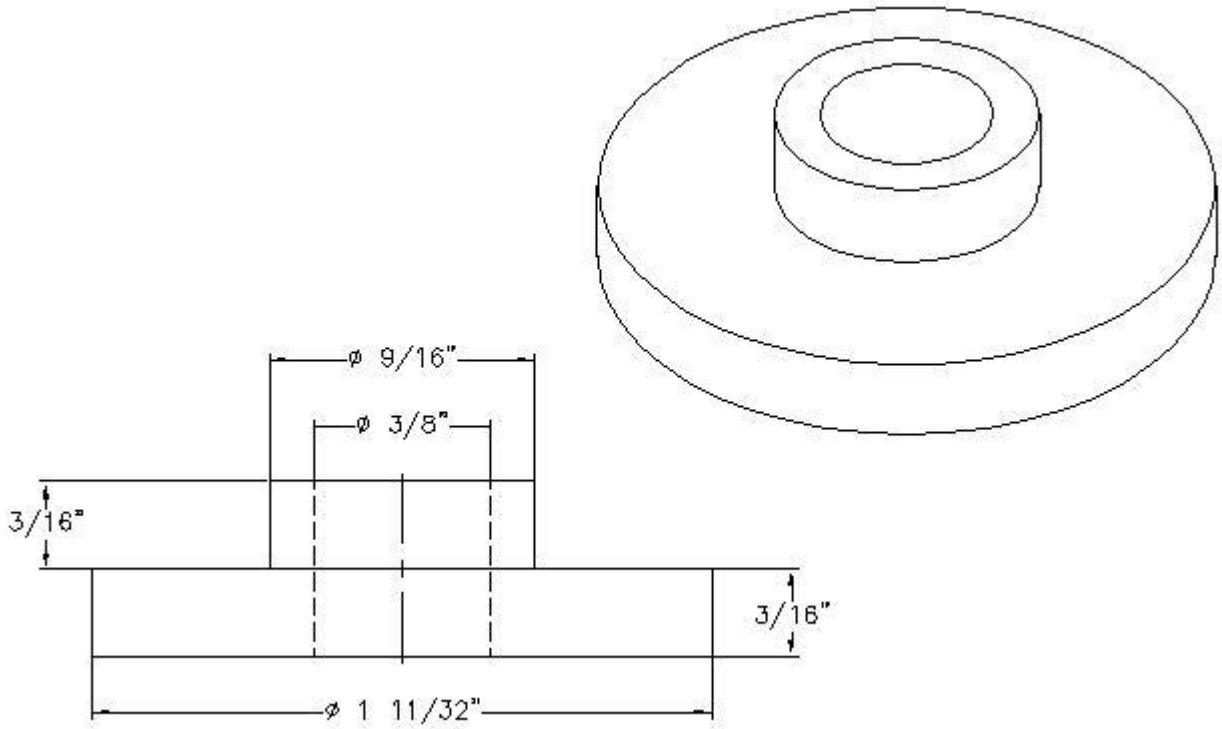

IB6205K4		
ITEM	DESCRIPTION	K4
IB6205	INSULATING BUSHING FOR 3/8" DIA. BOLT	4
FW166	3/8" FLAT WASHER ZY	4

NOTES:
- MATERIAL: GP03
- RATING OF 94 V-1 WITH AN OXYGEN INDEX RATING OF GREATER THAN 29

Specifications subject to change. Please contact CSF Customer Service for more information.
© copyright 2004 Central Steel Fabricators, Inc.
http://www.centralsteelfab.com ◆ 2100 Parkes Drive, Broadview, IL 60155
Phone: 708-652-2037 Fax: 708-652-7010

IP8X01 FLOOR INSULATING KIT FOR OVERHEAD SUPPORTED RACK

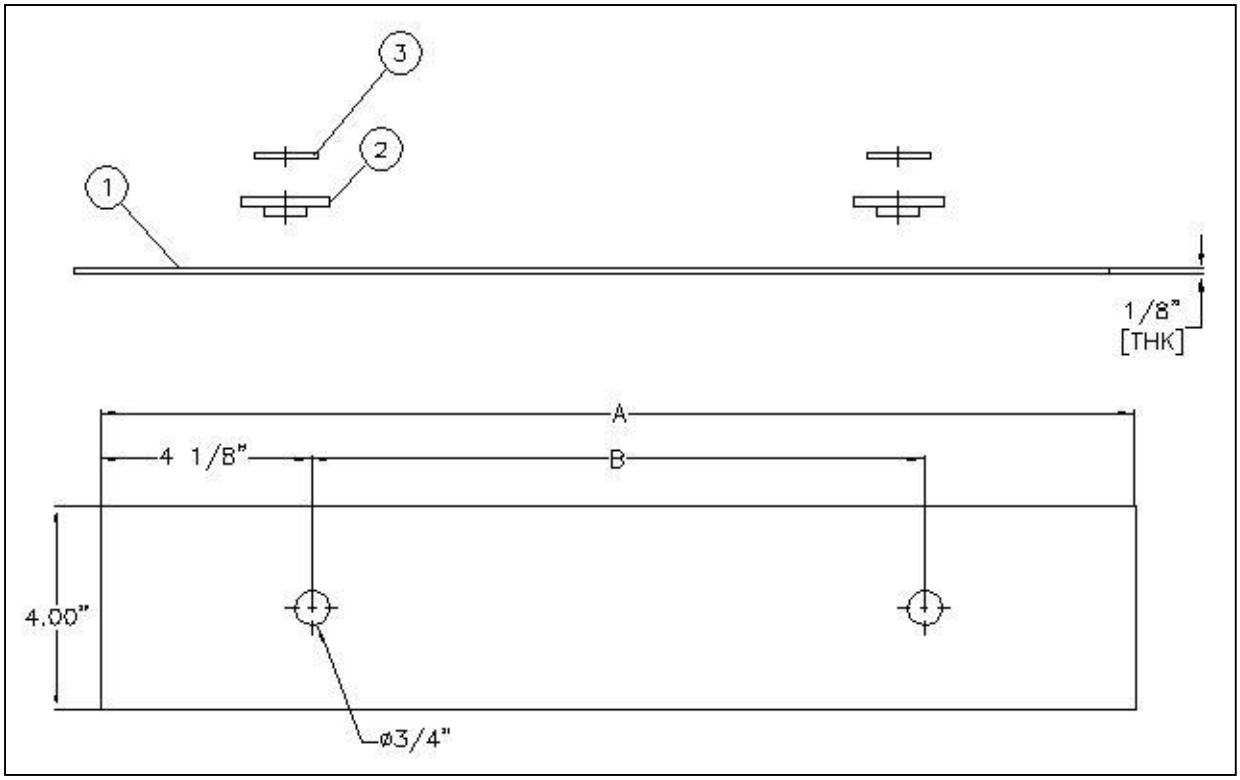

KIT FOR 19"		
IP8301		
ITEM	CSF#	QTY
1	IP7057-1	1
2	IB6203	2
3	FW167	2

KIT FOR 23"		
IP8401		
ITEM#	CSF#	QTY
1	IP7057-2	1
2	IB6203	2
3	FW167	2

NOTES:
-MATERIAL: 1/8" RED GP03
-FOR IP8301 A=20.25" & B=12.00"
-FOR IP8401 A=24.25" & B=16.00"

RVSD*0611

Specifications subject to change. Please contact CSF Customer Service for more information.

© copyright 2004 Central Steel Fabricators, Inc.
http://www.centralsteelfab.com ◆ 2100 Parkes Drive, Broadview, IL 60155
Phone: 708-652-2037 Fax: 708-652-7010

INSULATING PAD FOR 19.00" AND 23.00" RACK

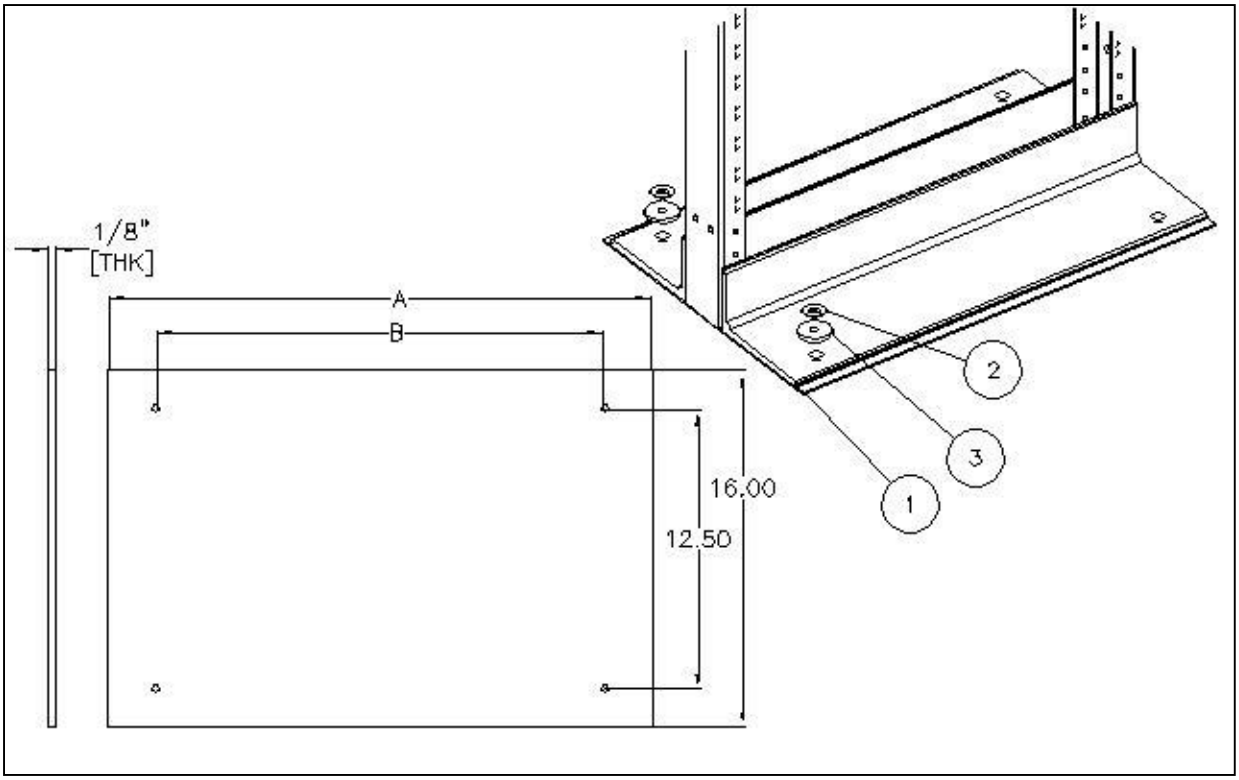

INSULATING PAD FOR 19" RACK		
IP8501		
ITEM#	CSF#	QTY
1	IP7058-1	1
2	IB6203	4
3	FW167	4

INSULATING PAD FOR 23" RACK		
IP8601		
ITEM#	CSF#	QTY
1	IP7058-2	1
2	IB6203	4
3	FW167	4

NOTES:
-MATERIAL: 1/8" RED GP03
-FOR IP8501 A=20 1/4" & B=16"
-FOR IP8601 A=24 1/4" & B=20"

RVSD*0611

Specifications subject to change. Please contact CSF Customer Service for more information.

© copyright 2004 Central Steel Fabricators, Inc.
http://www.centralsteelfab.com ◆ 2100 Parkes Drive, Broadview, IL 60155
Phone: 708-652-2037 Fax: 708-652-7010

IVA0127 - Insulating V-Bolt Assembly Kit

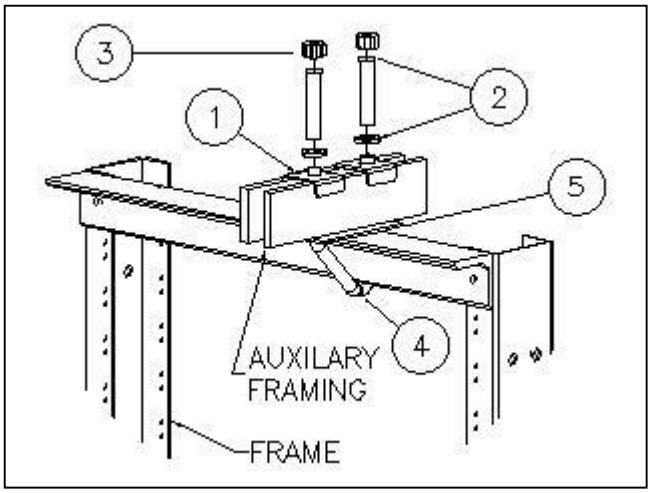

IVA0127			
ITEM#	CSF#	QTY	DESCRIPTION
1	FC312	2	FRAMING CLIP
2	NT114718	2	1/2" NYLON ASSEMBLY
3	HN147	2	1/2"-13 HEX NUT
4	VB254	1	V-BOLT
5	IP0007	1	INSULATION PAD

NOTES:
-FINISH: ALL STEEL PARTS ZINC AND YELLOW
-AUX. FRAMING AND RELAY RACK NOT INCLUDED

Specifications subject to change. Please contact CSF Customer Service for more information.
© copyright 2004 Central Steel Fabricators, Inc.
http://www.centralsteelfab.com ◆ 2100 Parkes Drive, Broadview, IL 60155
Phone: 708-652-2037 Fax: 708-652-7010

IVA0128 – Insulating "V"-Bolt Assembly [Auxiliary Channel]

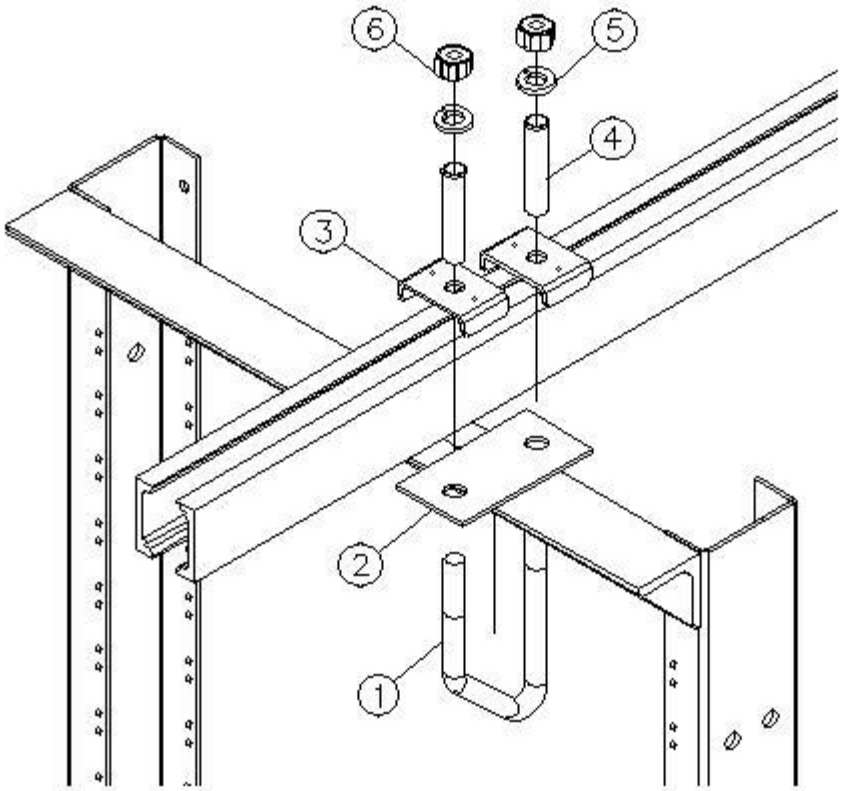

IVA0128 – INSULATING "V" BOLT ASSEMBLY [AUXILIARY CHANNEL]			
ITEM	CSF#	QTY	DESCRIPTION
1	VB254	1	"V" BOLT 1/2-13 X 5.00" X 1.50" LG. THREAD
2	IP0007	1	INSULATION PAD 2.12" X 4.12"
3	FC315	2	FRAMING CLIP
4	NT114718	2	NYLON ASSEMBLY
5	LW157	2	1/2" SPRING LOCKWASHER ZY
6	HN147	2	1/2-13 HEX NUT ZY

NOTES:
-FINISH: ALL STEEL PARTS ZINC AND YELLOW
-AUXILIARY FRAMING CHANNEL AND RELAY RACK NOT INCLUDED

Specifications subject to change. Please contact CSF Customer Service for more information.
© copyright 2004 Central Steel Fabricators, Inc.
http://www.centralsteelfab.com ◆ 2100 Parkes Drive, Broadview, IL 60155
Phone: 708-652-2037 Fax: 708-652-7010

IVA0129 - Insulating V-Bolt Assembly Kit

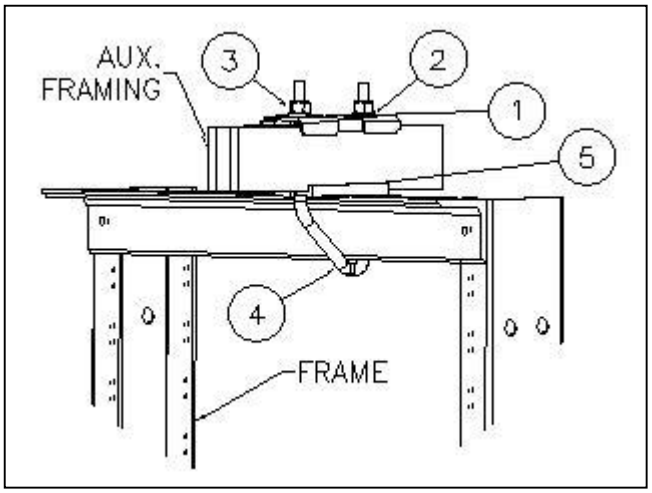

IVA0129			
ITEM #	CSF#	QTY.	DESCRIPTION
1	FC314	2	FRAMING CLIP
2	LW156	2	3/8" LOCK WASHER
3	HN146	2	3/8"-16 HEX NUT
4	VB253	1	V-BOLT
5	CI6401	4	3" INSULATED CHANNEL

NOTES:
-FINISH: ALL STEEL PARTS ZINC AND YELLOW
-AUX. FRAMING AND RELAY RACK NOT INCLUDED

Specifications subject to change. Please contact CSF Customer Service for more information.
© copyright 2004 Central Steel Fabricators, Inc.
http://www.centralsteelfab.com ◆ 2100 Parkes Drive, Broadview, IL 60155
Phone: 708-652-2037 Fax: 708-652-7010

INSULATING PADS

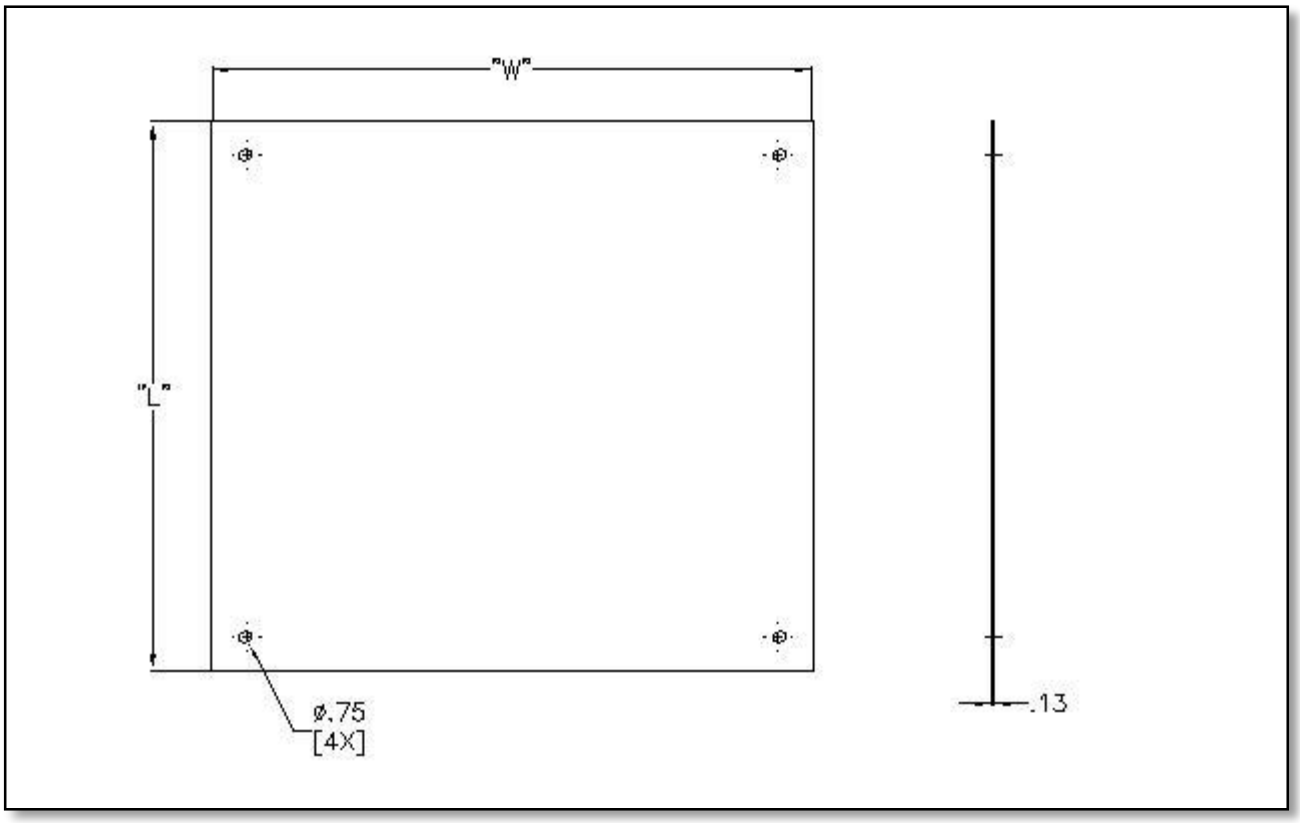

INSULATION PADS		
PART#	"W" WIDTH	"L" LENTH
IP7058-1	20.25"	16.00"
IP7058-2	24.25"	16.00"

INSULATION KITS		
PART#	"W" WIDTH	"L" LENTH
IP8501	20.25"	16.00"
IP8601	24.25"	16.00"

IP7058-HARDWARE [HARDWARE KIT FOR IP8501/ IP8601]			
ITEM#	CSF#	QTY	DESCRIPTION
1	FW167	4	1/2" FLAT WASHER, 1.37" O.D ZY
2	IB6203	4	INSULATION BUSHING FOR 1/2" BOLT

NOTES:
- OTHER SIZES AVAILABLE UPON REQUEST
- KIT INCLUDES ALL MOUNTING HARDWARE & INSULATION PAD

RVSD*0512

Specifications subject to change. Please contact CSF Customer Service for more information.

© copyright 2004 Central Steel Fabricators, Inc.
http://www.centralsteelfab.com ◆ 2100 Parkes Drive, Broadview, IL 60155
Phone: 708-652-2037 Fax: 708-652-7010

INSULATING PAD WITHOUT HOLES

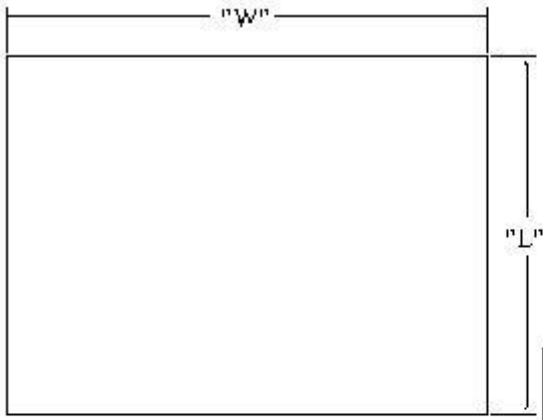

INSULATING PAD WITHOUT HOLES		
PART #	"W" WIDTH	"L" LENGHT
IP2418	24 "	18"
IP2424	24 "	24"
IP30325	30 "	30 ½"
IS4848	48 "	48"

OTHER SIZES AVAILABLE UPON REQUEST

Specifications subject to change. Please contact CSF Customer Service for more information.
© copyright 2004 Central Steel Fabricators, Inc.
http://www.centralsteelfab.com ◆ 2100 Parkes Drive, Broadview, IL 60155
Phone: 708-652-2037 Fax: 708-652-7010

INSULATION PLATES

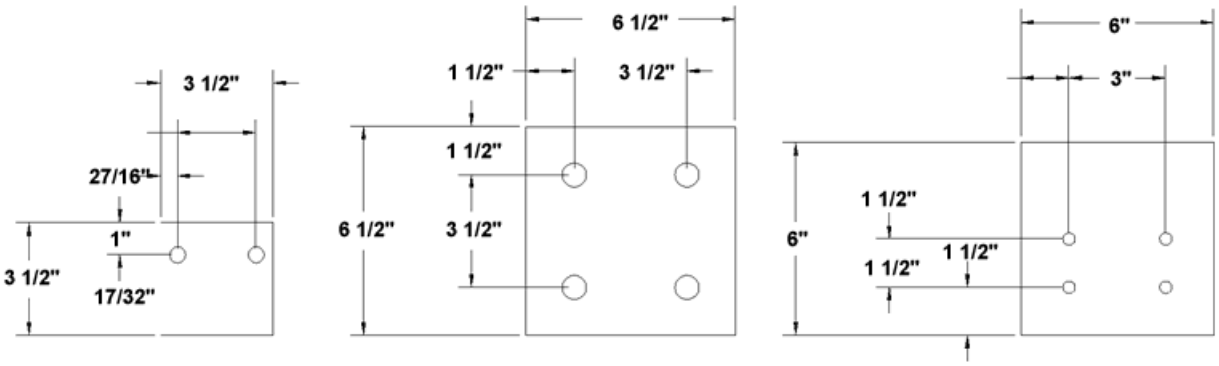

IP7067 IP7068 IP7069

INSULATING PLATE KIT	
PART #	IP5500

Other sizes available on request

Kit Includes all Mounting Hardware & Insulation Plates

Specifications subject to change. Please contact CSF Customer Service for more information.

© copyright 2004 Central Steel Fabricators, Inc.

http://www.centralsteelfab.com ◆ 2100 Parkes Drive, Broadview, IL 60155 ◆
Phone: 708-652-2037 Fax: 708-652-7010

SPECIAL INSULATION PADS

IP3215 RECTFIER 2 PIECE INSULATOR PAD
IP3215K RECTFIER 2 PIECE INSULATOR PAD KIT

Kits Include Insulating Hardware & Pads

Other sizes available on request

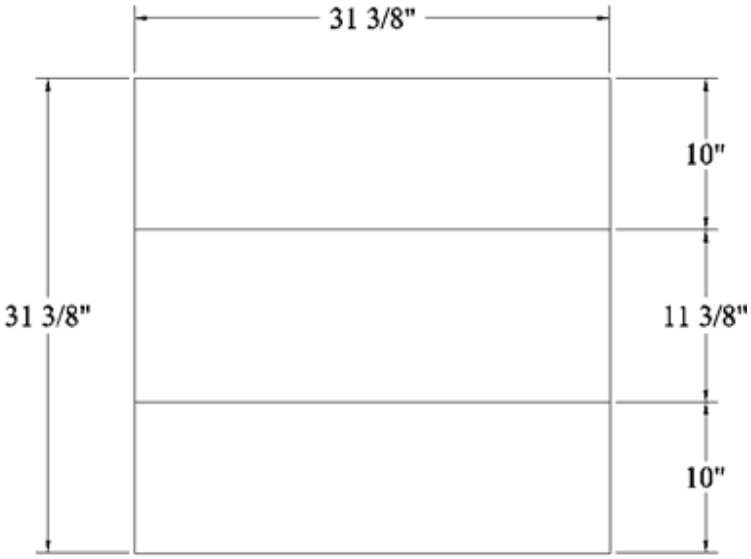

IP3232 FIELD DRILLABLE 3 PIECE INSULATOR PAD
IP3232K FIELD DRILLABLE 3 PIECE INSULATOR PAD KIT

Specifications subject to change. Please contact CSF Customer Service for more information.

© copyright 2004 Central Steel Fabricators, Inc.

http://www.centralsteelfab.com ◆ 2100 Parkes Drive, Broadview, IL 60155
Phone: 708-652-2037 Fax: 708-652-7010

IFM1040EQ – INSULATION FLOOR MOUNTING 23.00” 4 PT EQ

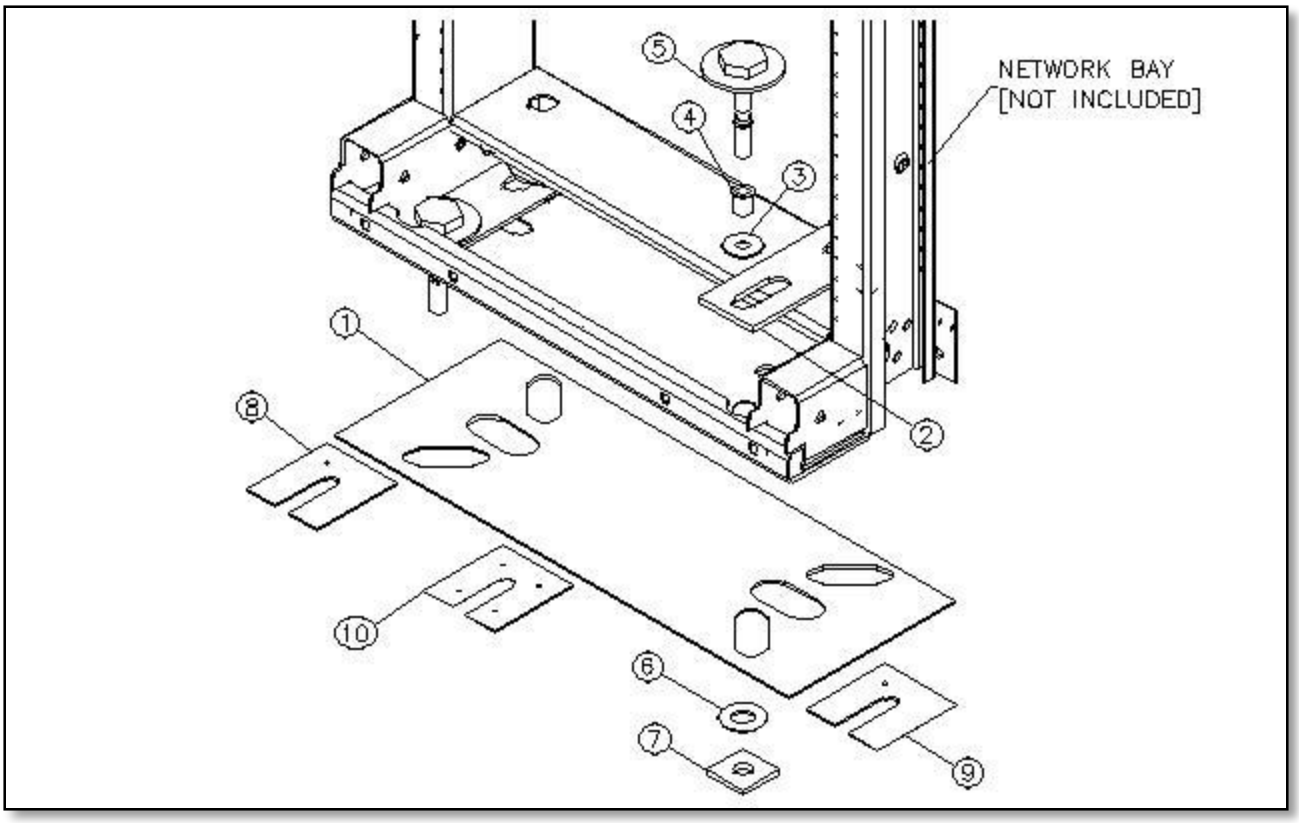

IFM1040EQ			
ITEM	CSF#	QTY	DESCRIPTION
1	IP9132	1	INSULATION PAD 9.43” X 25.69
2	HPM3000	2	HOLD DOWN PLATE 4SB UNI NETWORK
3	FW168	8	5/8” FLAT WASHER, [1.75 O.D.] ZY
4	NHB175	4	NYLON BUSHING 3/4” X 1.00”
5	HL67400	4	HILTI HSLB M12/25 CAP ANCHOR
6	FGW2017	4	GP03 FLAT WASHER DIA. 2.00” X [1/8” THK]
7	SW287ZY	8	SQUARE WASHER DIA. [.88” I.D] X 2.00” X 2.00” [1/4” THK]
8	RFS12ZY	8	RACK FLOOR SHIM 4.00” X 4.50” X [1/8”THK] ZY
9	RFS06ZY	16	RACK FLOOR SHIM 4.00” X 4.50” X [1/16”THK] ZY
10	IFS06	4	INSULATION FLOOR SHIM 4.00” X 4.50” X [1/16”THK]

Specifications subject to change. Please contact CSF Customer Service for more information.
© copyright 2004 Central Steel Fabricators, Inc.
http://www.centralsteelfab.com ◆ 2100 Parkes Drive, Broadview, IL 60155
Phone: 708-652-2037 Fax: 708-652-7010

FMH8447 - FLOOR MOUNTING KIT W/ HL45753

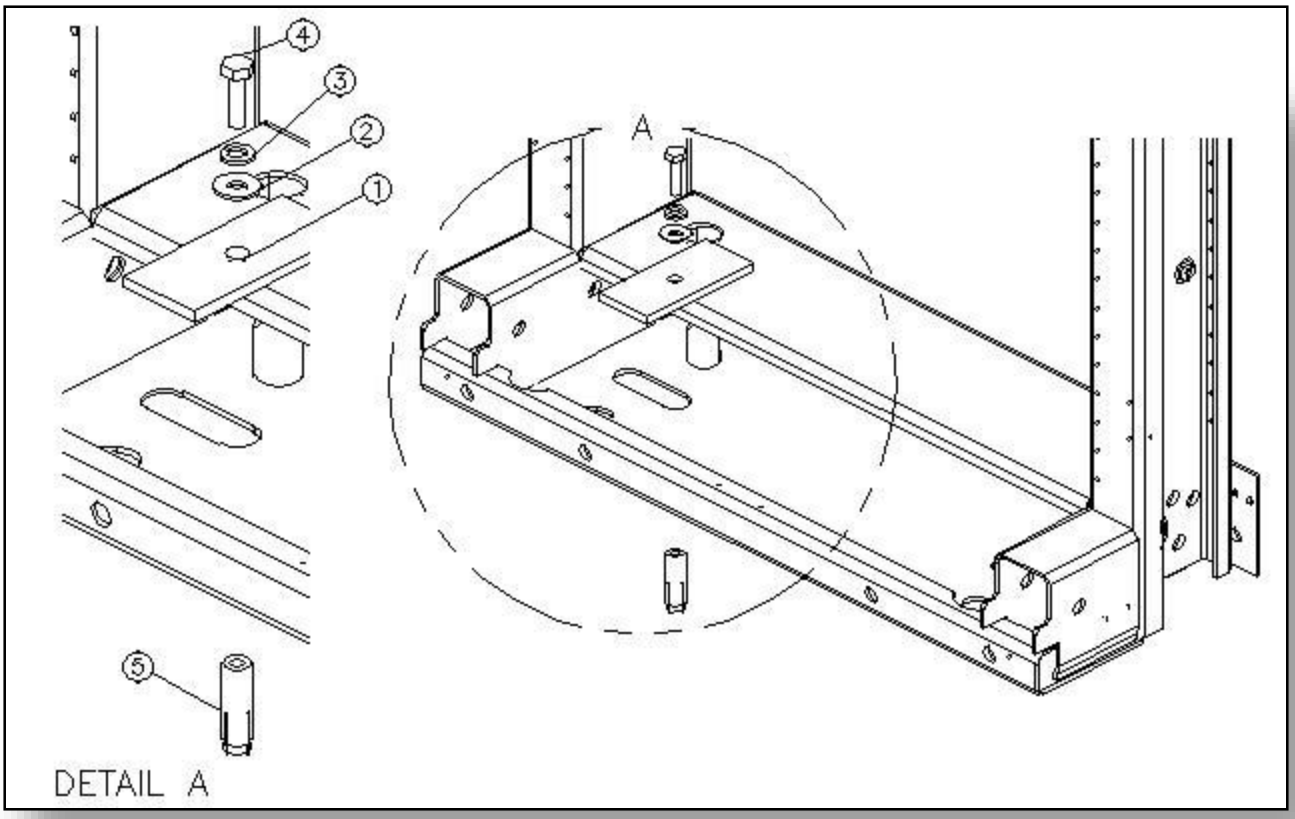

FMH8447			
ITEM	CSF#	QTY	DESCRIPTION
1	HDP2450	1	HOLD DOWN PLATE 4.50” X 2.00” X [.25” THK]
2	FW166	1	3/8” FLAT WASHER ZY
3	LW156	1	3/8” SPRING LOCKWASHER ZY
4	HH1006	1	3/8-16 HHCS X 1.25” LG. ZY
5	HL45753	1	HILTI HDI 3/8” DROP IN ANCHOR

Specifications subject to change. Please contact CSF Customer Service for more information.
© copyright 2004 Central Steel Fabricators, Inc.
http://www.centralsteelfab.com ◆ 2100 Parkes Drive, Broadview, IL 60155
Phone: 708-652-2037 Fax: 708-652-7010

FMH2100 – FLOOR ANCHOR KIT HDP220/ .50" HILTI

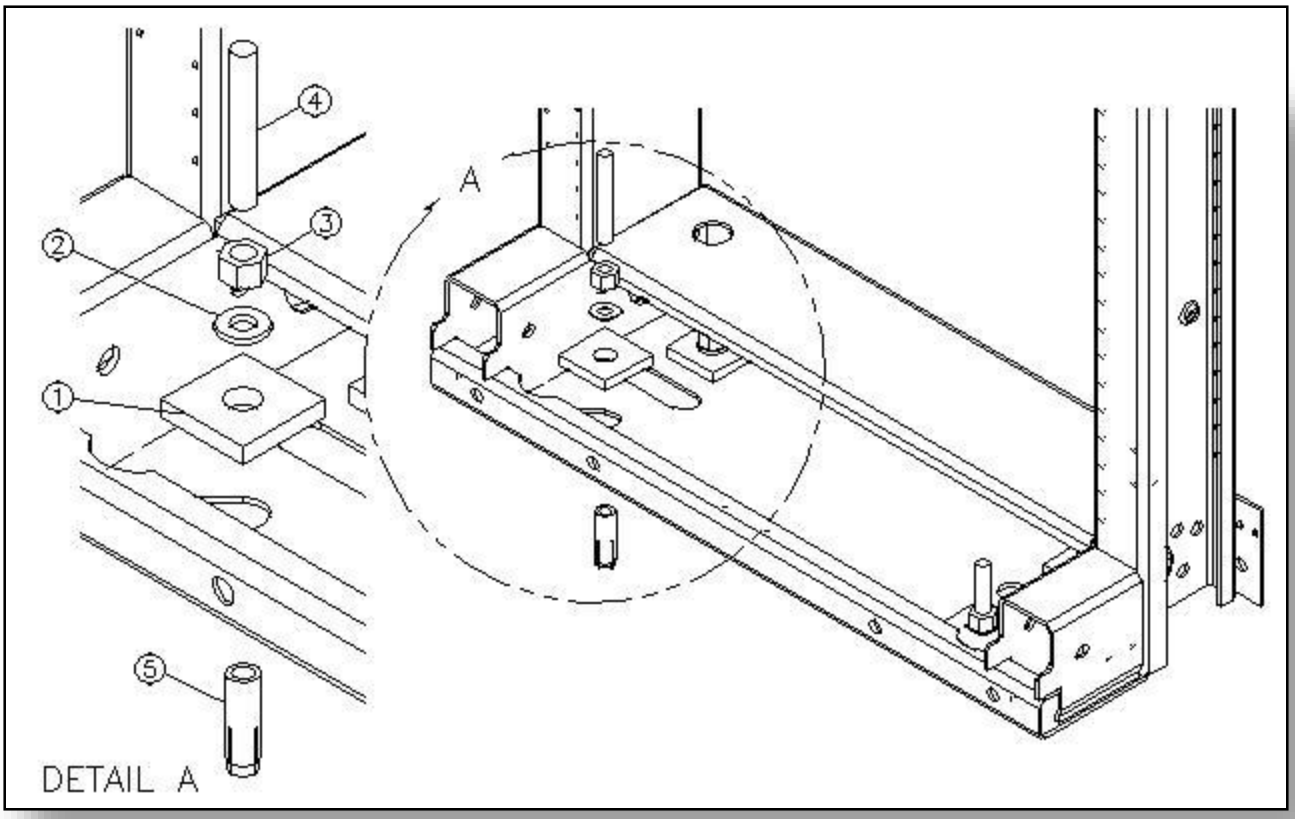

FMH200			
ITEM	CSF#	QTY	DESCRIPTION
1	HDP2200	4	HOLD DOWN PLATE 2.00" X 2.00" X [.38" THK]
2	FW167	4	1/2" FLAT WASHER ZY
3	HN147	4	1/2-13 HEX NUT ZY
4	TR29	4	1/2-13 THREADED ROD X 3.25" LG.
5	HL336427	4	HILTI HDI 1/2" DROP IN ANCHOR
6	LW157	4	1/2" SPRING LOCKEWASHER ZY [NOT SHOWN]

RVSD*0613

Specifications subject to change. Please contact CSF Customer Service for more information.

© copyright 2004 Central Steel Fabricators, Inc.
http://www.centralsteelfab.com ◆ 2100 Parkes Drive, Broadview, IL 60155
Phone: 708-652-2037 Fax: 708-652-7010

FMH1104 – FLOOR MOUNTING HARDWARE W/ HL336427

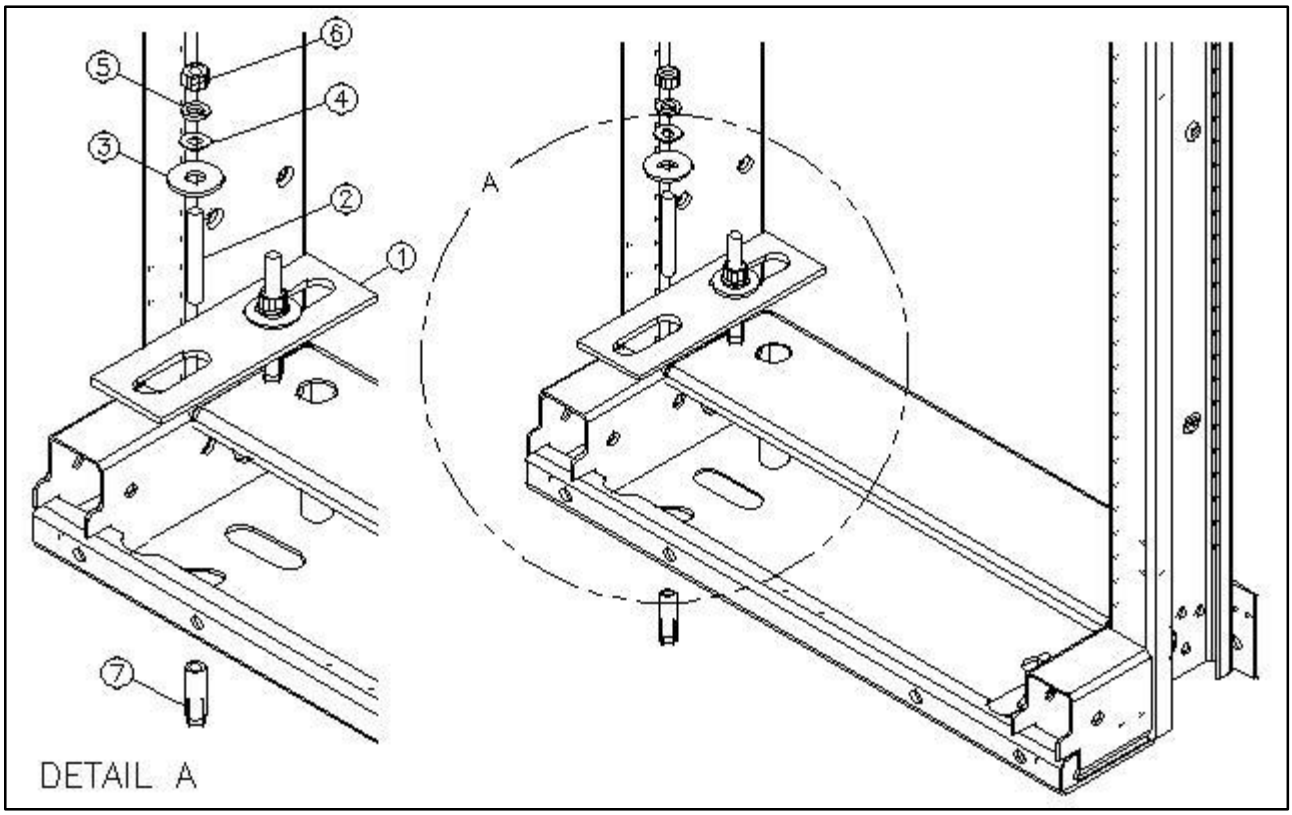

FMH1104			
ITEM	CSF#	QTY	DESCRIPTION
1	HPM3000	2	HOLD DOWN PLATE
2	TR29	4	1/2-13 THREADED ROD X 3.25” LG.
3	FW168	4	5/8” FLAT WASHER ZY
4	FW167	4	1/2” FLAT WASHER ZY
5	LW157	4	1/2” SPRING LOCK WASHER ZY
6	HN147	4	1/2-13 HEX NUT ZY
7	HL336427	4	HILTI HDI 1/2” DROP IN ANCHOR

Specifications subject to change. Please contact CSF Customer Service for more information.
© copyright 2004 Central Steel Fabricators, Inc.
http://www.centralsteelfab.com ◆ 2100 Parkes Drive, Broadview, IL 60155
Phone: 708-652-2037 Fax: 708-652-7010

FMH1101 – FLOOR MOUNTING HARDWARE W/ LS2312

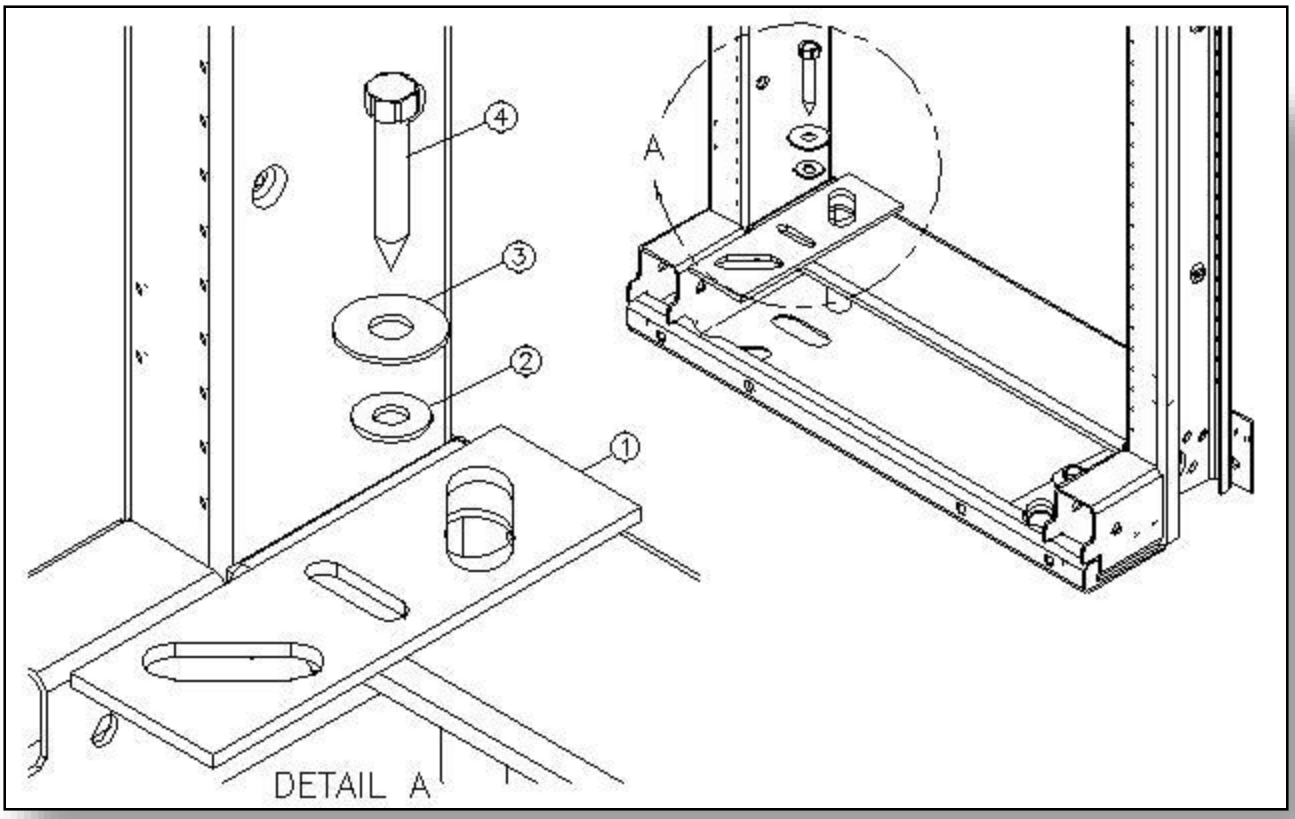

FMH1101			
ITEM	CSF#	QTY	DESCRIPTION
1	HPU3000	2	HOLD DOWN PLATE
2	FW167	2	1/2” FLAT WASHER ZY
3	FW168	2	5/8” FLAT WASHER ZY
4	LS2312	2	1/2” HEX HEAD LAG SCREW X 3.00” ZY

RVSD*0713

Specifications subject to change. Please contact CSF Customer Service for more information.

© copyright 2004 Central Steel Fabricators, Inc.
http://www.centralsteelfab.com ◆ 2100 Parkes Drive, Broadview, IL 60155
Phone: 708-652-2037 Fax: 708-652-7010

FMH1001 – FLOOR MOUNTING HARDWARE W/ ES1805

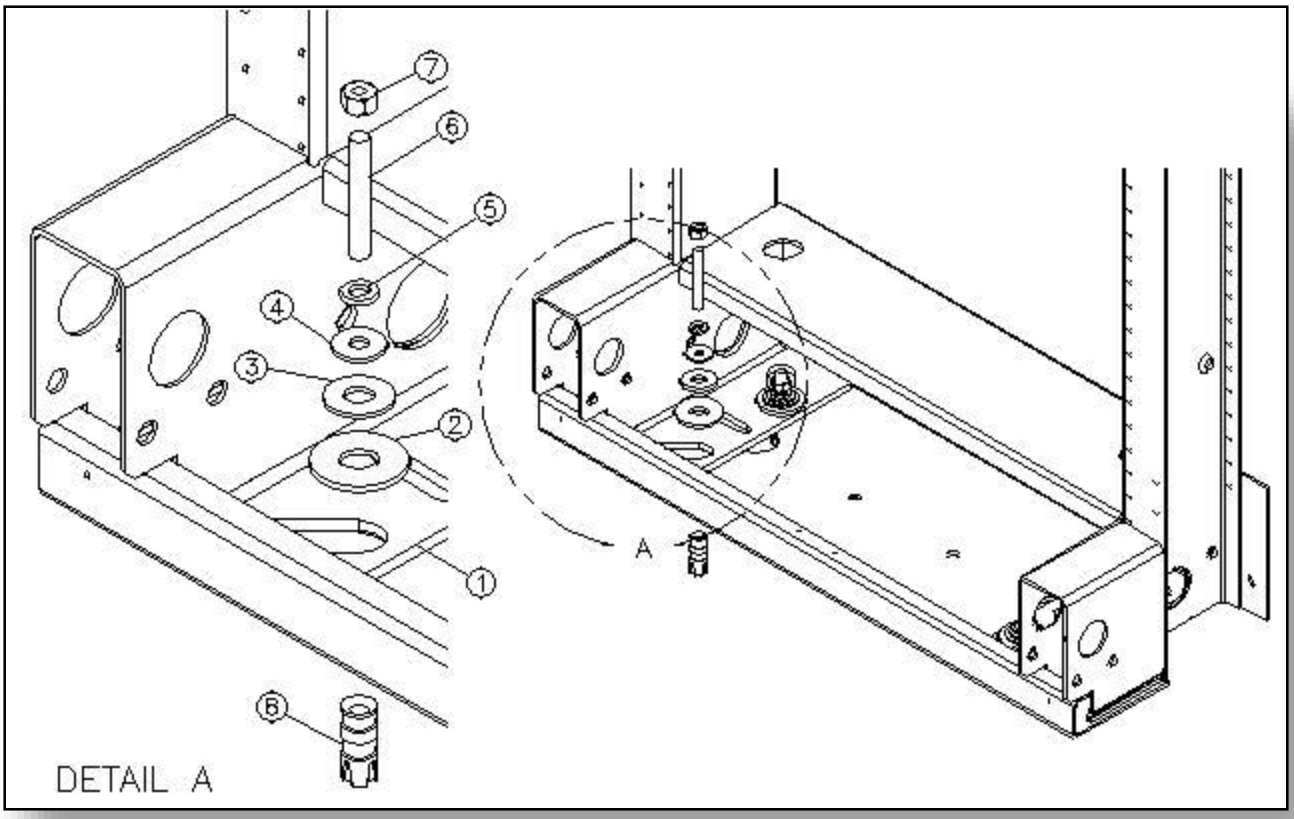

FMH1001			
ITEM	CSF#	QTY	DESCRIPTION
1	HPU3000	2	HOLD DOWN PLATE
2	FW168	4	5/8” FLAT WASHER ZY
3	FW167	4	1/2” FLAT WASHER ZY
4	FW166	4	3/8” FLAT WASHER ZY
5	LW156	4	3/8” SPRING LOCKWASHER ZY
6	TR01	4	3/8-16 THREADED ROD X 2.50” LG. ZY
7	HN146	4	3/8-16 HEX NUT ZY
8	ES1805	4	EXPANSION SHIELD 3/8” X 1.50” LG.

Specifications subject to change. Please contact CSF Customer Service for more information.

© copyright 2004 Central Steel Fabricators, Inc.
http://www.centralsteelfab.com ◆ 2100 Parkes Drive, Broadview, IL 60155
Phone: 708-652-2037 Fax: 708-652-7010

FMH0902 – FLOOR MOUNTING HARDWARE SELF DRILL

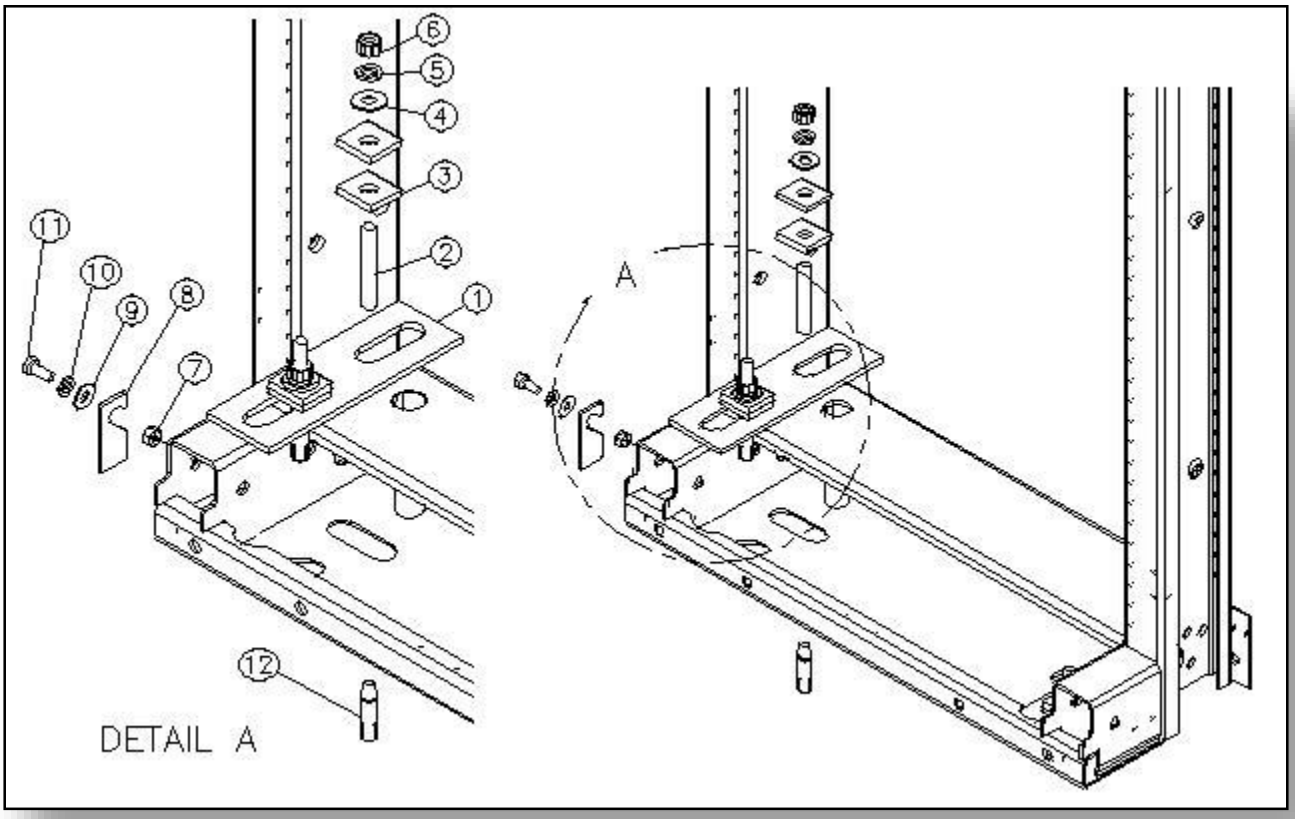

FMH0902			
ITEM	CSF#	QTY	DESCRIPTION
1	HPM3000	2	HOLD DOWN PLATE
2	TR29C	4	1/2-13 THREADED ROD X 4.50” LG.
3	SW62	8	5/8” SQUARE WASHER ZY
4	FW167	4	1/2” FLAT WASHER ZY
5	LW157	4	1/2” SPRING LOCKWASHER ZY
6	HN147	4	1/2-13 HEX NUT ZY
7	HN146	1	3/8-16 HEX NUT ZY
8	R500	1	BAY SPACER BRACKET
9	FW166	1	3/8” FLAT WASHER ZY
10	LW156	1	3/8” SPRING LOCKWASHER ZY
11	HH1004	1	3/8-16 HHCS X 7/8” LG. ZY
12	SDA12	4	1/2-13 SELF DRILL EXPANSION ANCHOR

Specifications subject to change. Please contact CSF Customer Service for more information.

© copyright 2004 Central Steel Fabricators, Inc.
http://www.centralsteelfab.com ◆ 2100 Parkes Drive, Broadview, IL 60155
Phone: 708-652-2037 Fax: 708-652-7010

FMH50K – FLOOR MOUNTING HARDWARE W/ HL336427

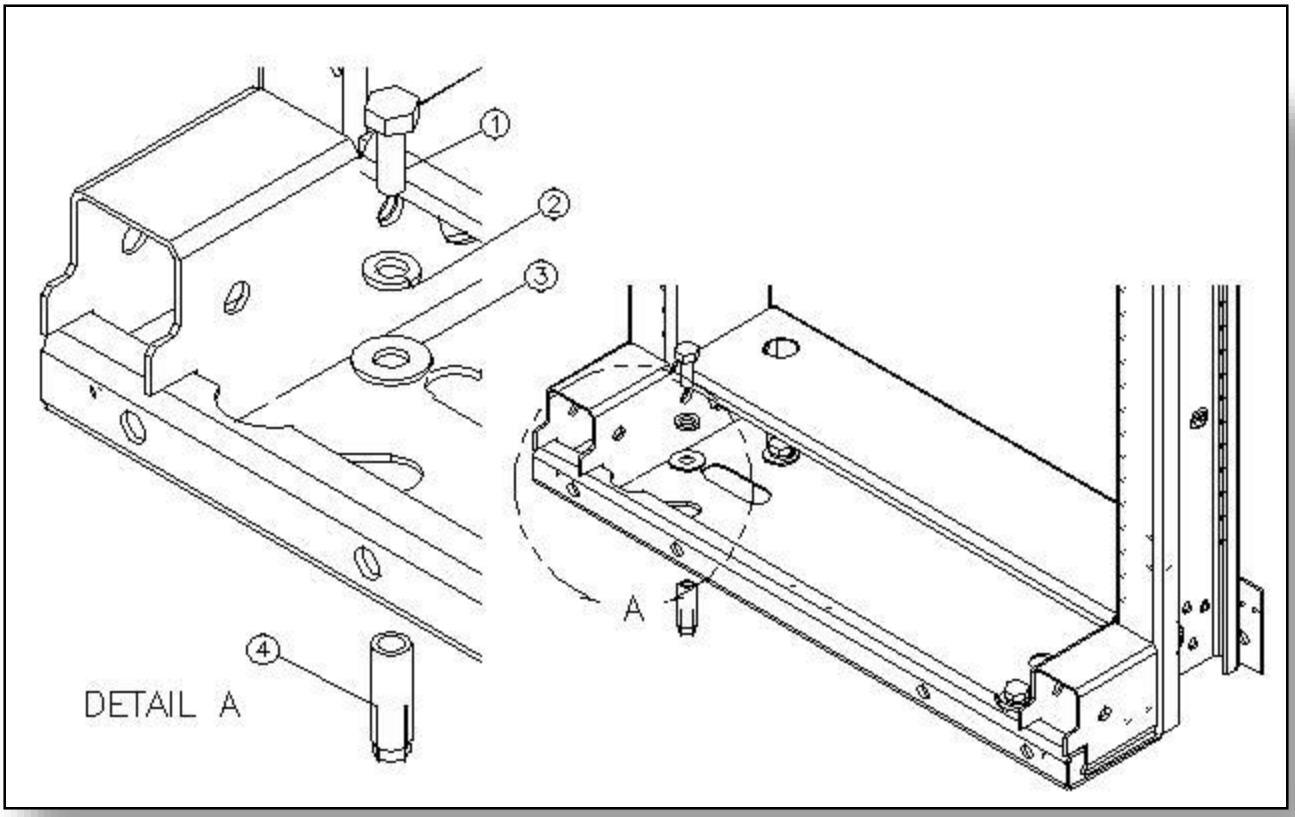

FMH50K			
ITEM	CSF#	QTY	DESCRIPTION
1	HH1105	4	1/2-13 HHCS X 1.50” LG. ZY
2	LW157	4	1/2” SPRING LOCKWASHER ZY
3	FW167	4	1/2” FLAT WASHER ZY
4	HL336427	4	HILTI HDI 1/2” DROP IN ANCHOR

Specifications subject to change. Please contact CSF Customer Service for more information.
© copyright 2004 Central Steel Fabricators, Inc.
http://www.centralsteelfab.com ◆ 2100 Parkes Drive, Broadview, IL 60155
Phone: 708-652-2037 Fax: 708-652-7010

FMH50H – FLOOR MOUNTING HARDWARE 1/2” HILTI

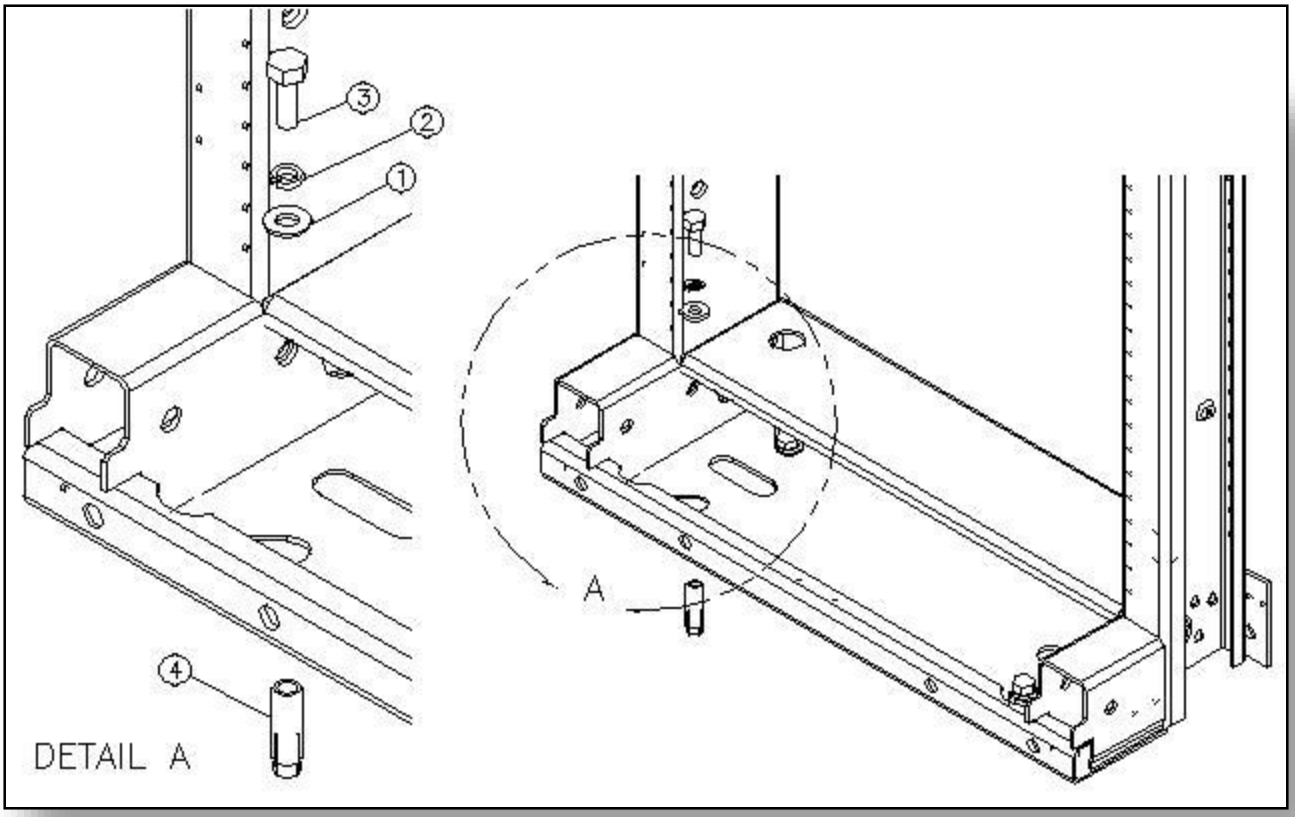

FMH50H			
ITEM	CSF#	QTY	DESCRIPTION
1	FW167	4	1/2” FLAT WASHER ZY
2	LW157	4	1/2” SPRING LOCKWASHER ZY
3	HH1104	4	1/2-13 HHCS X 1.25” LG. ZY
4	HL336427	4	HILTI HDI 1/2” DROP IN ANCHOR

Specifications subject to change. Please contact CSF Customer Service for more information.
© copyright 2004 Central Steel Fabricators, Inc.
http://www.centralsteelfab.com ◆ 2100 Parkes Drive, Broadview, IL 60155
Phone: 708-652-2037 Fax: 708-652-7010

FMH50D – FLOOR MOUNTING HARDWARE 1/2" DROP IN ANCHOR

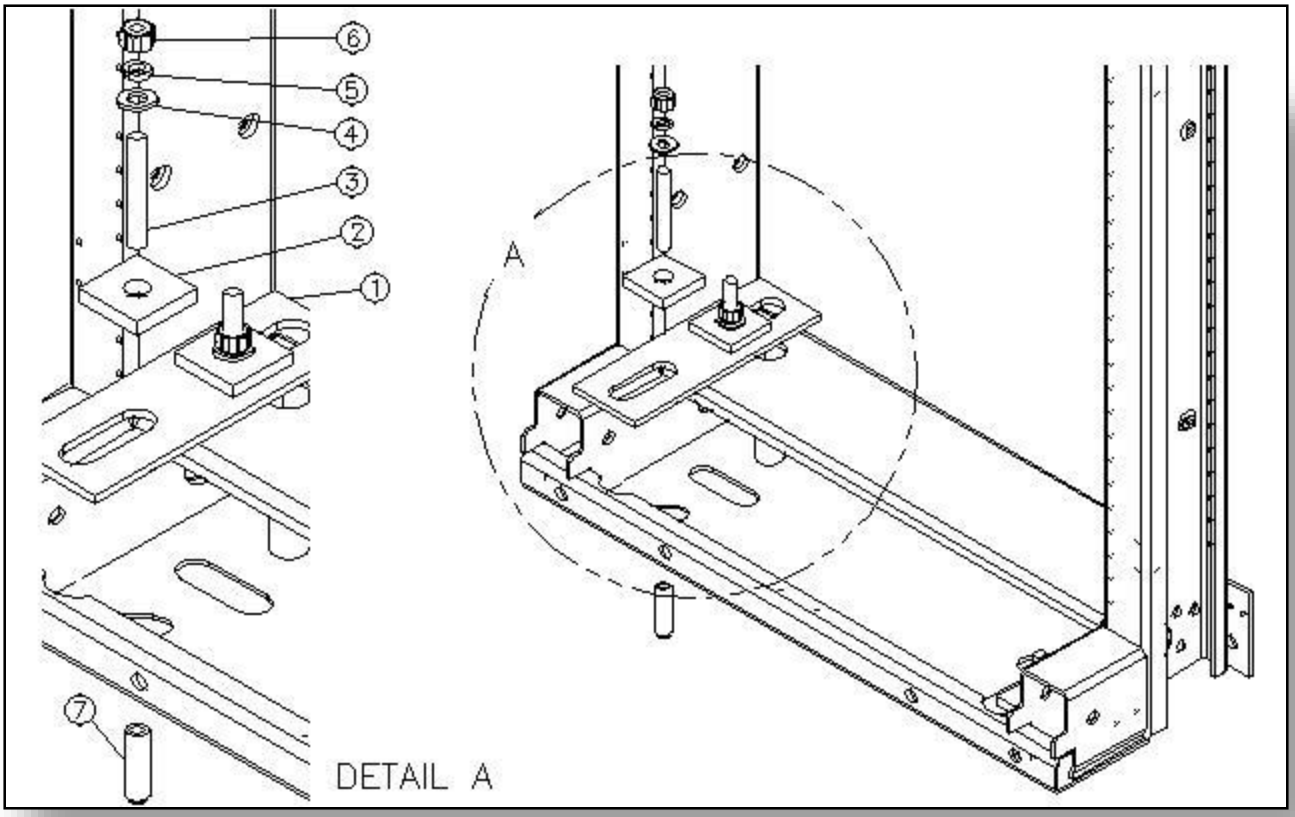

FMH50D			
ITEM	CSF#	QTY	DESCRIPTION
1	HPM3000	2	HOLD DOWN PLATE
2	HDP2200	4	HOLD DOWN PLATE 2.00" X 2.00" X [.38" THK]
3	TR29	4	1/2-13 THREADED ROD X 3.25"
4	FW167	4	1/2" FLAT WASHER ZY
5	LW157	4	1/2" SPRING LOCKWASHER ZY
6	HN147	4	1/2-13 HEX NUT ZY
7	DIA50	4	DROP IN ANCHOR 1/2-13

Specifications subject to change. Please contact CSF Customer Service for more information.
© copyright 2004 Central Steel Fabricators, Inc.
http://www.centralsteelfab.com ◆ 2100 Parkes Drive, Broadview, IL 60155
Phone: 708-652-2037 Fax: 708-652-7010

FMH37D – FLOOR MOUNTING HARDWARE 3/8" + HARDWARE

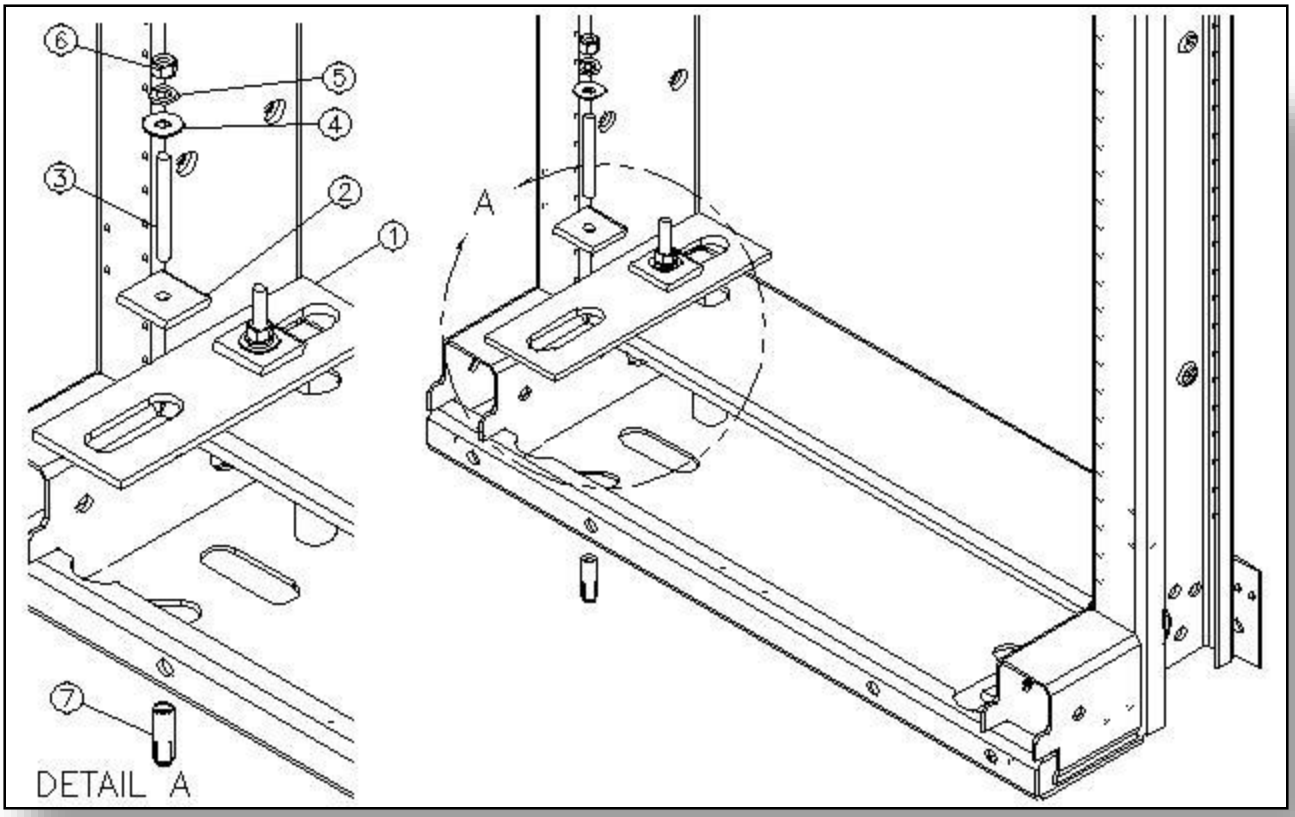

FMH37D			
ITEM	CSF#	QTY	DESCRIPTION
1	HPM3000	2	HOLD DOWN PLATE
2	SW37	4	3/8" HOLE SQUARE WASHER ZY
3	TR03	4	3/8-16 THREADED ROD X 3.00" ZY
4	FW166	4	3/8" FLAT WASHER ZY
5	LW156	4	3/8" SPRING LOCKWASHER ZY
6	HN146	4	3/8-16 HEX NUT ZY
7	DIA37	4	DROP IN ANCHOR 3/8-16

Specifications subject to change. Please contact CSF Customer Service for more information.
© copyright 2004 Central Steel Fabricators, Inc.
http://www.centralsteelfab.com ◆ 2100 Parkes Drive, Broadview, IL 60155
Phone: 708-652-2037 Fax: 708-652-7010

HDK2100 – HOLD DOWN PLATE KIT – EQ 1/2” [4] NWB

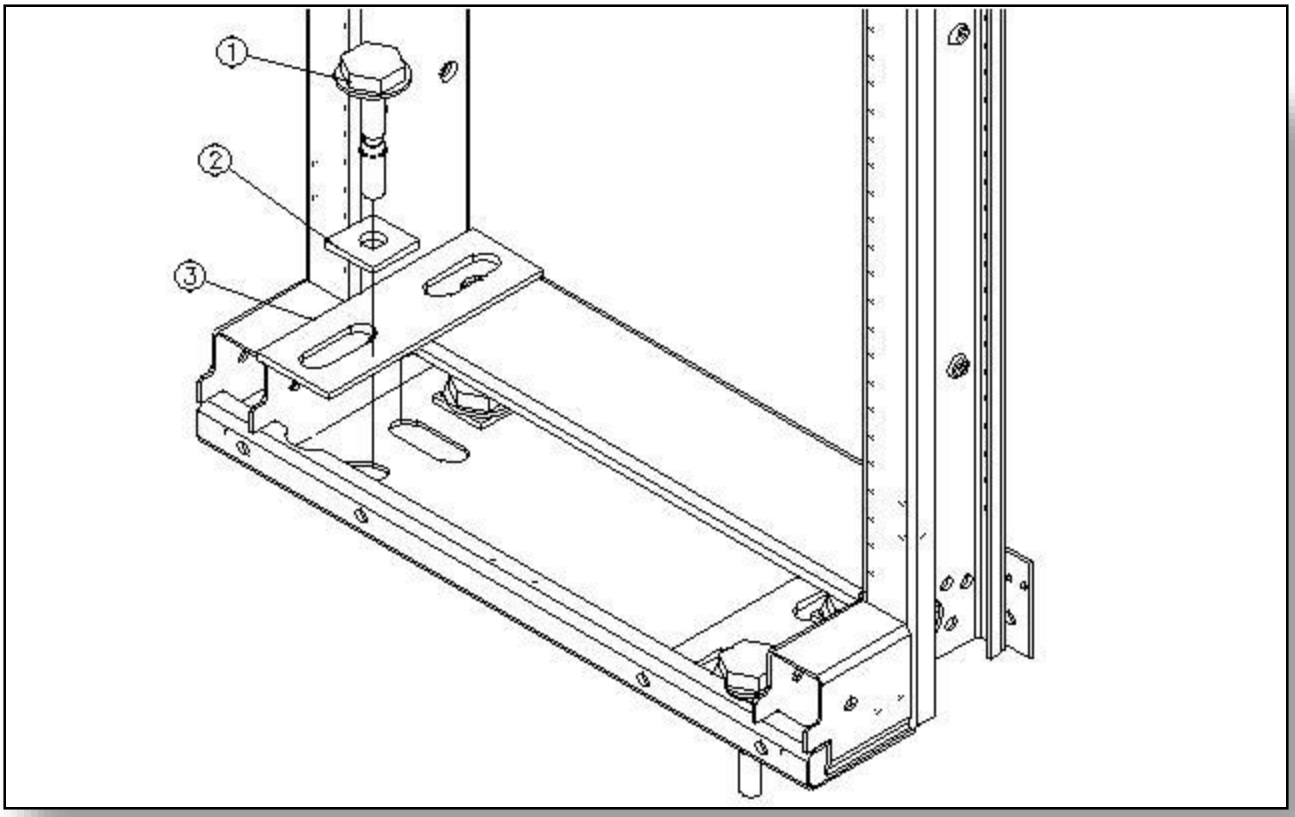

HDK2100			
ITEM	CSF#	QTY	DESCRIPTION
1	HL67400	4	HILTI HSLB M12/25 CAP ANCHOR
2	SW287	4	SQUARE WASHER 2.00” X 2.00” X [.25” THK] DIA .87 HOLE ZY
3	HPM3000	2	HOLD DOWN PLATE

Specifications subject to change. Please contact CSF Customer Service for more information.

© copyright 2004 Central Steel Fabricators, Inc.
http://www.centralsteelfab.com ◆ 2100 Parkes Drive, Broadview, IL 60155
Phone: 708-652-2037 Fax: 708-652-7010

HDK0987 – HOLD DOWN KIT EQ - 1/2" HARDWARE

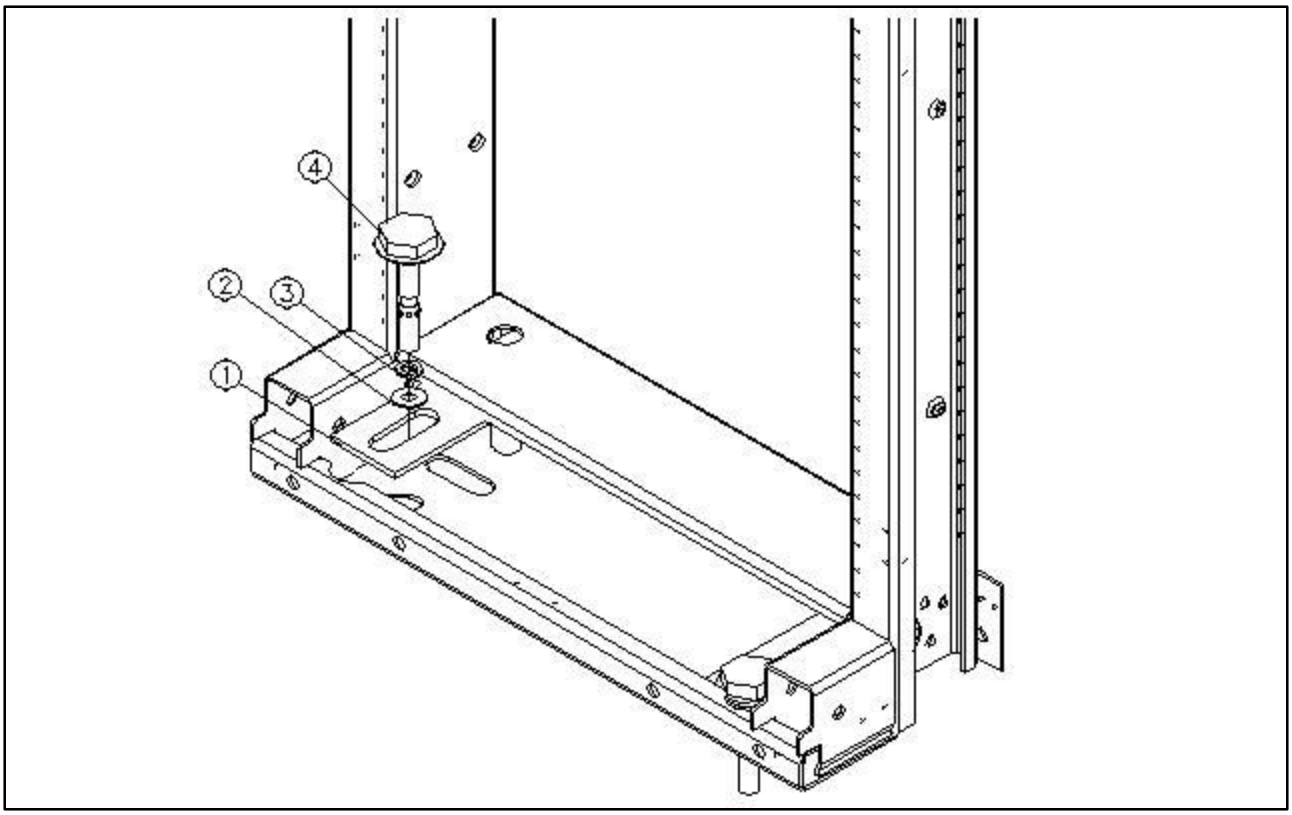

HDK0987			
ITEM	CSF#	QTY	DESCRIPTION
1	HPM3000	2	HOLD DOWN PLATE
2	FW167	4	1/2" FLAT WASHER ZY
3	LW157	4	1/2" SPRING LOCKWASHER ZY
4	HL67400	4	HILTI HSLB M12/25 CAP ANCHOR

Specifications subject to change. Please contact CSF Customer Service for more information.
© copyright 2004 Central Steel Fabricators, Inc.
http://www.centralsteelfab.com ◆ 2100 Parkes Drive, Broadview, IL 60155
Phone: 708-652-2037 Fax: 708-652-7010

HL67400K – HILTI ANCHOR KIT M12/25 [4 EA]

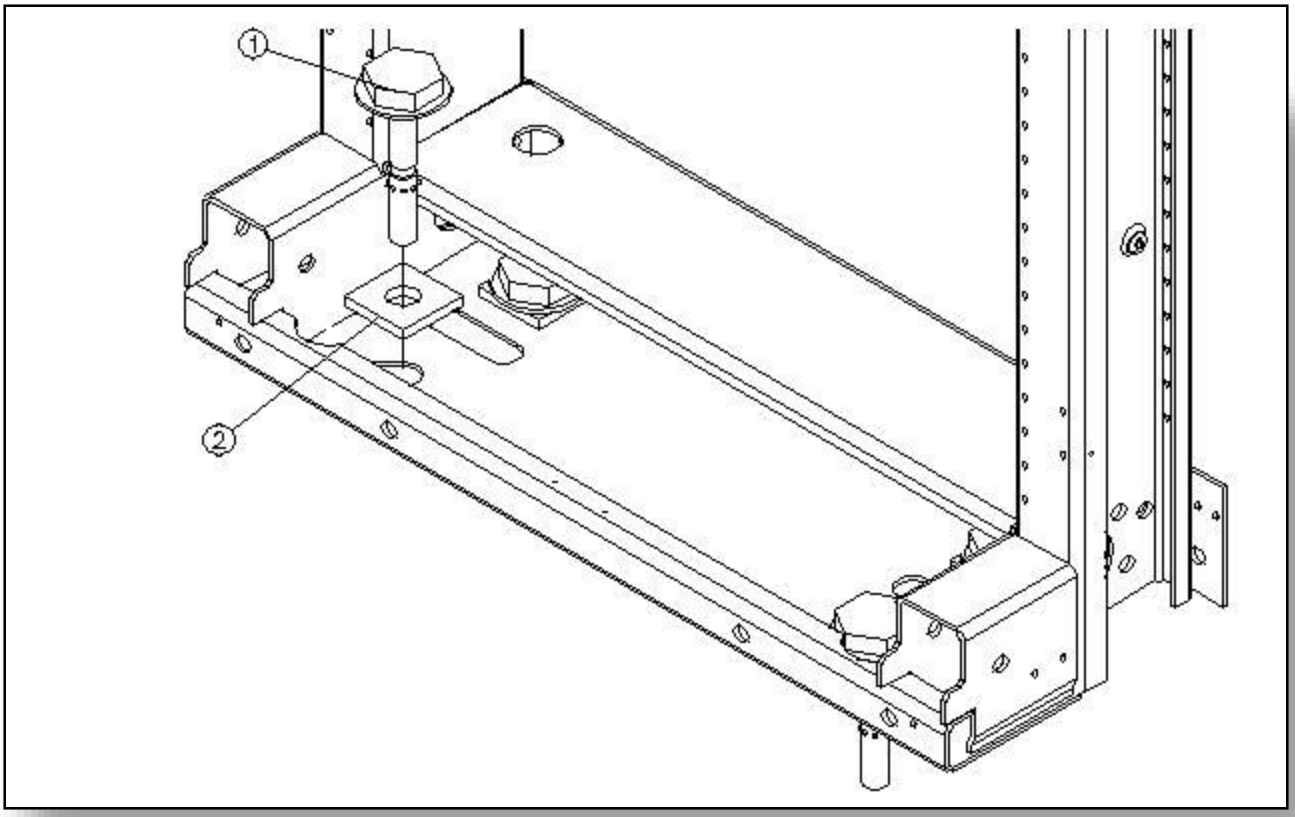

HL67400K			
ITEM	CSF#	QTY	DESCRIPTION
1	HL67400	4	HILTI HSLB M12/25 CAP ANCHOR
2	SW287	4	SQUARE WASHER 2.00” X 2.00” X [1/4” THK]

Specifications subject to change. Please contact CSF Customer Service for more information.
© copyright 2004 Central Steel Fabricators, Inc.
http://www.centralsteelfab.com ◆ 2100 Parkes Drive, Broadview, IL 60155
Phone: 708-652-2037 Fax: 708-652-7010

Contents

• Adjustable "T" Junction Kit (1-1/2" And 2" Stringer)
• Adjustable Intermediate Cable Rack Kit (1-1/2" And 2")
• Adjustable Straight Kit (1-1/2" And 2" Stringer)
• Adjustable Straight Continuity Kit (SCA22CN/SCA22DWCN)
• Cable Rack Assembly Unequal Width
• Connect Three Unequal Length Cable Racks
• Step Down Splice Kit
• Bolt Horizontal Rack To Vertical Rack
• Insulate Cable Rack "T" Junction (1-1/2" And 2" Stringer)
• Insulate Cable Rack Junction (1-1/2" And 2" Stringer)
• Cable Rack Assembly – 3 Rack
• Straight Clamp Kit For 1-1/2" And 2" Stringer
• Corner Brace Assembly
• 45 Degree Clamp Kits
• 90 Degree Clamp Kits
• Cable Rack Support Kit
• 2142 Installation Kit
• 1-1/2" And 2" End Bar Assembly
• Second Level Strap Attached to Cable Rack
• Hanger Bracket Kits
• SHBXX Slotted Hanger Bracket Kit
• SCR6901 Support – 5" Cable Rack
• Bracing Cable Rack Kits to Aux. Channel
• Bracing Cable Rack Kits to Aux. Bar
• Clip J – Bolt Kit – Cable Rack (1-1/2" And 2" Stringer) To Framing Bar
• Cable Rack Pan 120" Long
• Top Mounting Assembly
• Corner Kit [Seismic] 1.50" or 2.00" Cable Rack
• End Guard Kit16 [Footprint 6-7-3] 16.00" Deep
• Ground Jumper Bracket Kit01
• Spanner J – Bolt Assembly – 2.00" Cable Rack Cross [Continuity]
• Clip J – Bolt Assembly – 2.00" Cable Rack Cross [Continuity]
• Cable Support Tube – CST12DGK

Specifications subject to change. Please contact CSF Customer Service for more information.
© copyright 2004 Central Steel Fabricators, Inc.
http://www.centralsteelfab.com ◆ 2100 Parkes Drive, Broadview, IL 60155
Phone: 708-652-2037 Fax: 708-652-7010

ACR12 – Adjustable "T" Junction Kit [1.50" Cable Rack]

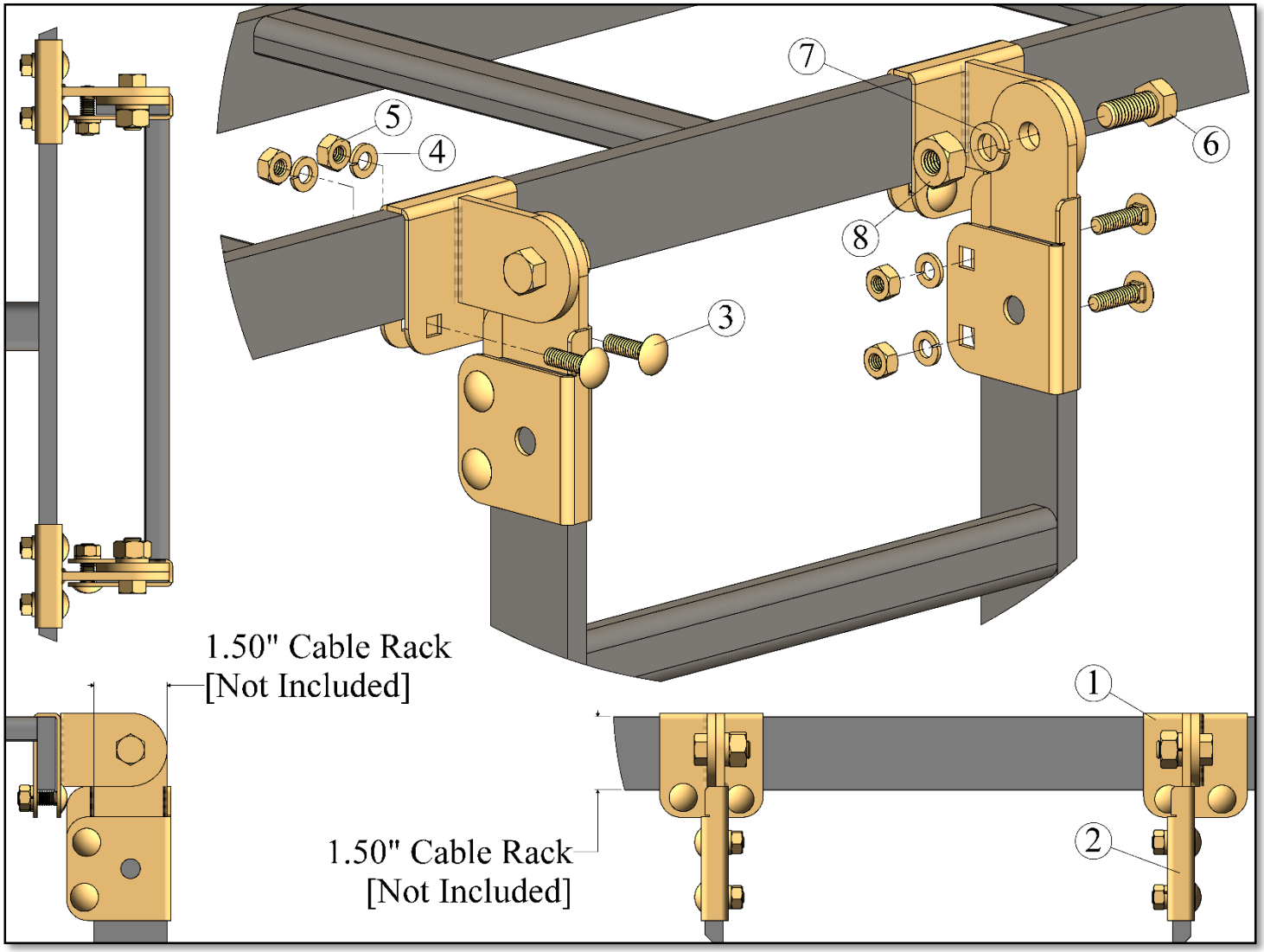

ACR12 – Adjustable "T" Junction Kit [1.50" Cable Rack]			
Item#	CSF P/N#	Description	QTY
1	ACR1B	Adjustable "T" Bracket [1.50" Cable Rack]	2
2	SCA1B	Adjustable Straight Bracket [1.50" Cable Rack]	2

AC Hardware – Adjustable Clamp Kit Hardware			
Item#	CSF P/N#	Description	QTY
3	CB0604	1/4-20 x .88" Lg. – Carriage Bolt	8
4	LW154	1/4" Spring Lock Washer	8
5	HN144	1/4-20 Hex Nut	8
6	HH1004	3/8-16 Hex Head Cap Screw x .88" Lg.	2
7	LW156	3/8" Spring Lock Washer	2
8	HN146	3/8-16 Hex Nut	2

Notes: Zinc and Yellow finish is UL grounding conductor classified

Specifications subject to change. Please contact CSF Customer Service for more information.

© copyright 2004 Central Steel Fabricators, Inc.
http://www.centralsteelfab.com ◆ 2100 Parkes Drive, Broadview, IL 60155
Phone: 708-652-2037 Fax: 708-652-7010

ACR12CN – Adjustable "T" Junction Kit [1.50" Cable Rack] - Continuity

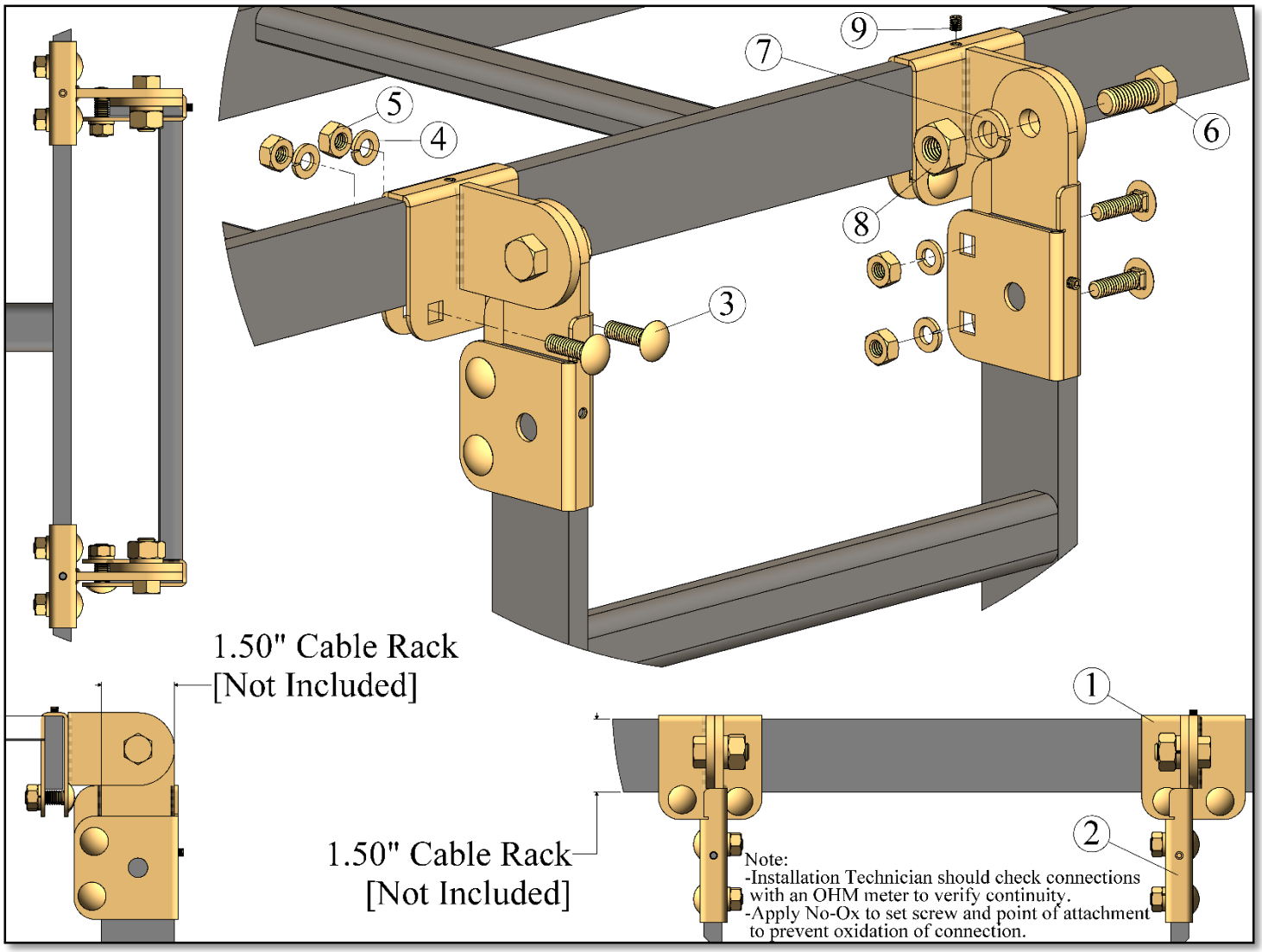

ACR12CN – Adjustable "T" Junction Kit [1.50" Cable Rack] - Continuity			
Item#	CSF P/N#	Description	QTY
1	ACR1BCN	Adjustable "T" Bracket [1.50" Cable Rack] - Continuity	2
2	SCA1BCN	Adjustable Straight Bracket [1.50" Cable Rack] - Continuity	2

AC Hardware – Adjustable Clamp Kit Hardware			
Item#	CSF P/N#	Description	QTY
3	CB0604	1/4-20 x .88" Lg. – Carriage Bolt	8
4	LW154	1/4" Spring Lock Washer	8
5	HN144	1/4-20 Hex Nut	8
6	HH1004	3/8-16 Hex Head Cap Screw x .88" Lg.	2
7	LW156	3/8" Spring Lock Washer	2
8	HN146	3/8-16 Hex Nut	2
9	SS0303	10-32 x 3/16 Socket Set Screw	2

Specifications subject to change. Please contact CSF Customer Service for more information.

© copyright 2004 Central Steel Fabricators, Inc.

http://www.centralsteelfab.com ◆ 2100 Parkes Drive, Broadview, IL 60155
Phone: 708-652-2037 Fax: 708-652-7010

ACR22 – Adjustable "T" Junction Kit [2.00" Cable Rack]

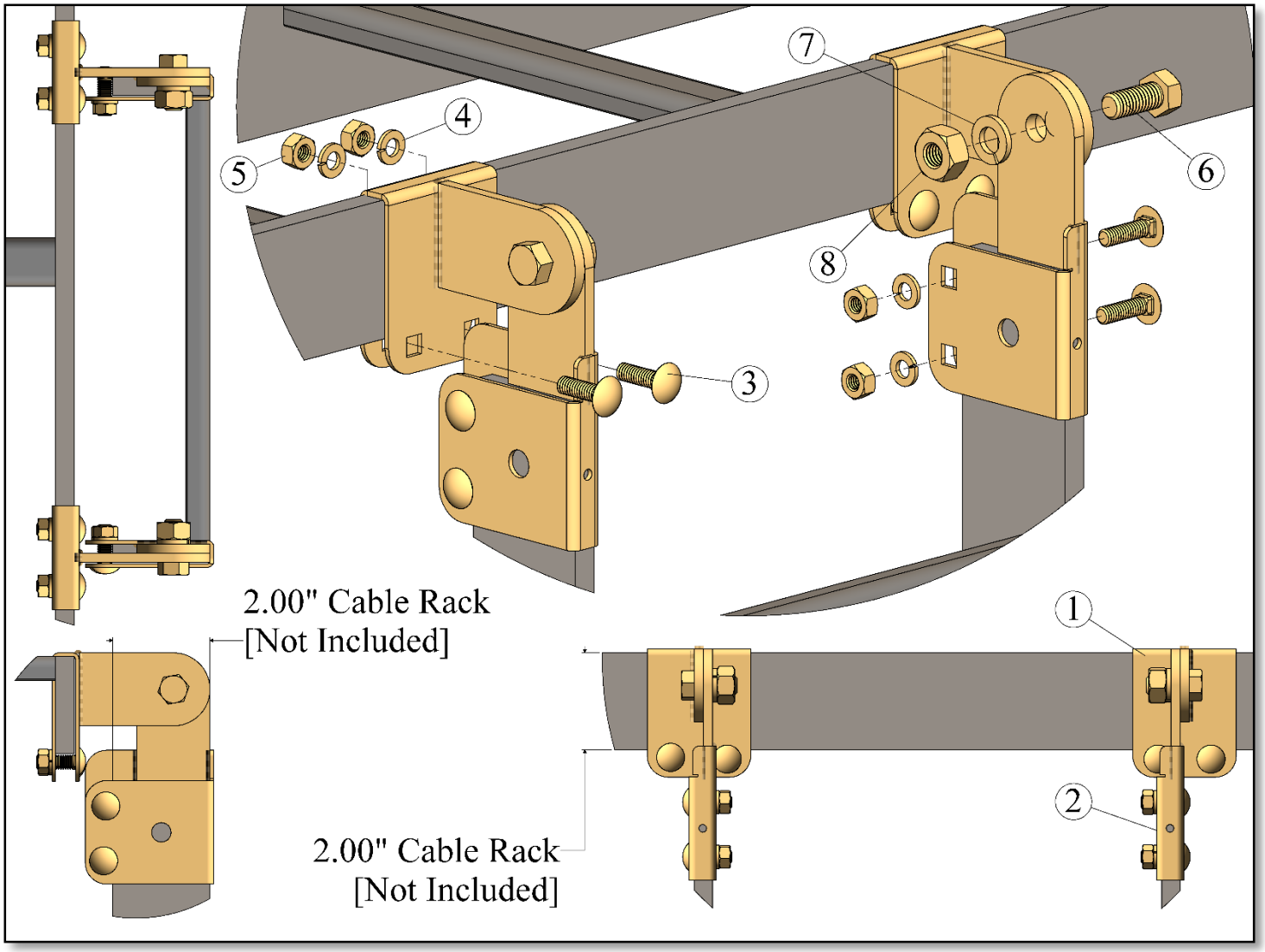

ACR22 – Adjustable "T" Junction Kit [2.00" Cable Rack]			
Item#	CSF P/N#	Description	QTY
1	ACR2B	Adjustable "T" Bracket [2.00" Cable Rack]	2
2	SCA2B	Adjustable Straight Bracket [2.00" Cable Rack]	2

AC Hardware – Adjustable Clamp Kit Hardware			
Item#	CSF P/N#	Description	QTY
3	CB0604	1/4-20 x .88" Lg. – Carriage Bolt	8
4	LW154	1/4" Spring Lock Washer	8
5	HN144	1/4-20 Hex Nut	8
6	HH1004	3/8-16 Hex Head Cap Screw x .88" Lg.	2
7	LW156	3/8" Spring Lock Washer	2
8	HN146	3/8-16 Hex Nut	2

Notes: Zinc and Yellow finish is UL grounding conductor classified

Specifications subject to change. Please contact CSF Customer Service for more information.

© copyright 2004 Central Steel Fabricators, Inc.
http://www.centralsteelfab.com ◆ 2100 Parkes Drive, Broadview, IL 60155
Phone: 708-652-2037 Fax: 708-652-7010

ACR22CN – Adjustable "T" Junction Kit [2.00" Cable Rack] - Continuity

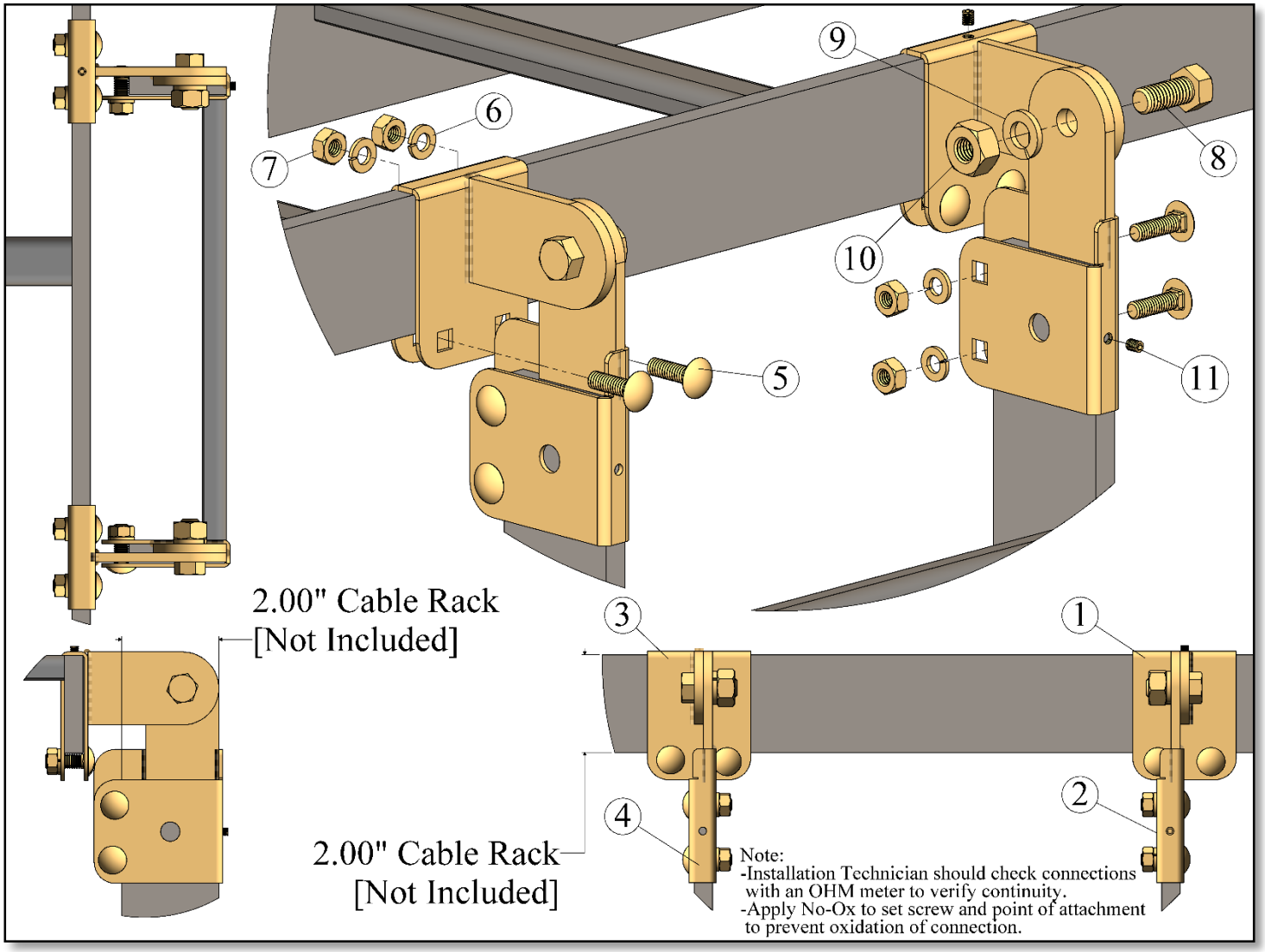

ACR22CN – Adjustable "T" Junction Kit [2.00" Cable Rack] - Continuity

Item#	CSF P/N#	Description	QTY
1	ACR2BCN	Adjustable "T" Bracket [2.00" Cable Rack] - Continuity	1
2	SCA2BCN	Adjustable Straight Bracket [2.00" Cable Rack] - Continuity	1
3	ACR2B	Adjustable "T" Bracket [2.00" Cable Rack]	1
4	SCA2B	Adjustable Straight Bracket [2.00" Cable Rack]	1

AC Hardware – Adjustable Clamp Kit Hardware

Item#	CSF P/N#	Description	QTY
5	CB0604	1/4-20 x .88" Lg. – Carriage Bolt	8
6	LW154	1/4" Spring Lock Washer	8
7	HN144	1/4-20 Hex Nut	8
8	HH1004	3/8-16 Hex Head Cap Screw x .88" Lg.	2
9	LW156	3/8" Spring Lock Washer	2
10	HN146	3/8-16 Hex Nut	2
11	SS0303	10-32 x 3/16 Socket Set Screw	2

ICR12 – Adjustable Intermediate Cable Rack Kit [1.50” Cable Rack]

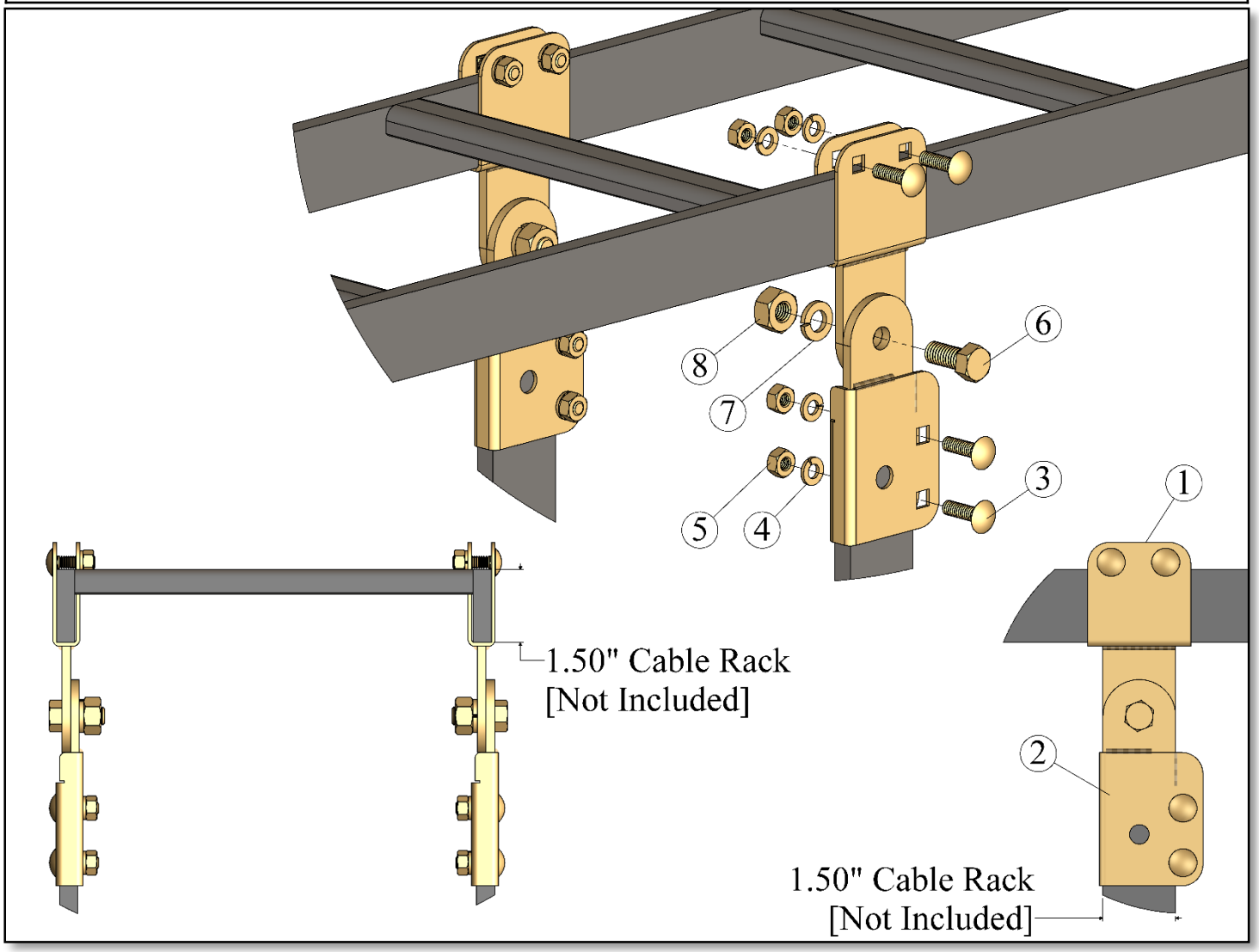

ICR12 – Adjustable Intermediate Cable Rack Kit [1.50” Cable Rack]			
Item#	CSF P/N#	Description	QTY
1	ICR1B	Adjustable Intermediate Bracket [1.50” Cable Rack]	2
2	SCA1B	Adjustable Straight Bracket [1.50” Cable Rack]	2

AC Hardware – Adjustable Clamp Kit Hardware			
Item#	CSF P/N#	Description	QTY
3	CB0604	1/4-20 x .88” Lg. – Carriage Bolt	8
4	LW154	1/4” Spring Lock Washer	8
5	HN144	1/4-20 Hex Nut	8
6	HH1004	3/8-16 Hex Head Cap Screw x .88” Lg.	2
7	LW156	3/8” Spring Lock Washer	2
8	HN146	3/8-16 Hex Nut	2

Notes: Zinc and Yellow finish is UL grounding conductor classified

Specifications subject to change. Please contact CSF Customer Service for more information.

© copyright 2004 Central Steel Fabricators, Inc.
http://www.centralsteelfab.com ◆ 2100 Parkes Drive, Broadview, IL 60155
Phone: 708-652-2037 Fax: 708-652-7010

ICR22 – Adjustable Intermediate Cable Rack Kit [2.00” Cable Rack]

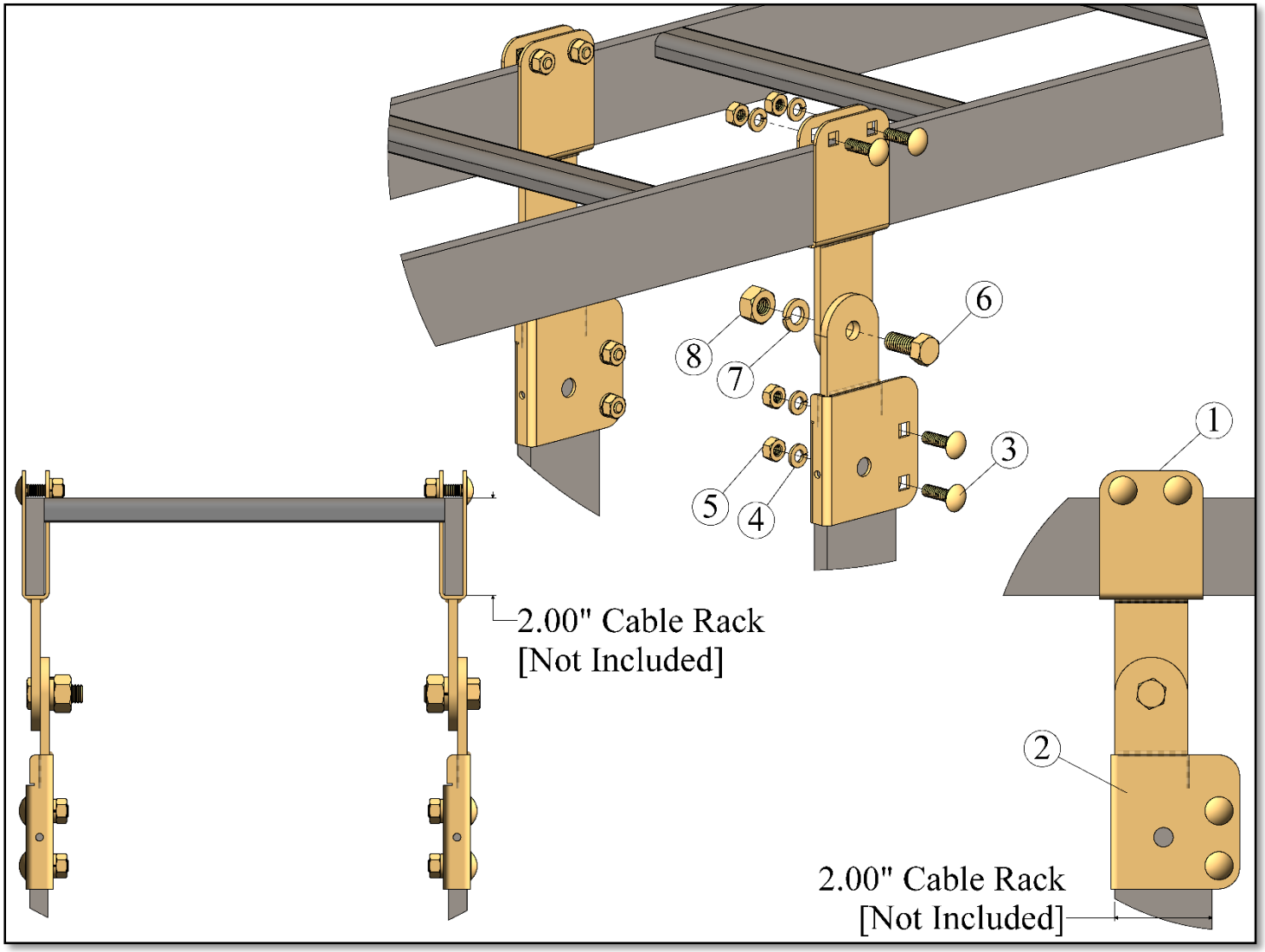

ICR22 – Adjustable Intermediate Cable Rack Kit [2.00” Cable Rack]			
Item#	CSF P/N#	Description	QTY
1	ICR2B	Adjustable Intermediate Bracket [2.00” Cable Rack]	2
2	SCA2B	Adjustable Straight Bracket [2.00” Cable Rack]	2

AC Hardware – Adjustable Clamp Kit Hardware			
Item#	CSF P/N#	Description	QTY
3	CB0604	1/4-20 x .88” Lg. – Carriage Bolt	8
4	LW154	1/4” Spring Lock Washer	8
5	HN144	1/4-20 Hex Nut	8
6	HH1004	3/8-16 Hex Head Cap Screw x .88” Lg.	2
7	LW156	3/8” Spring Lock Washer	2
8	HN146	3/8-16 Hex Nut	2

Notes: Zinc and Yellow finish is UL grounding conductor classified

Specifications subject to change. Please contact CSF Customer Service for more information.

© copyright 2004 Central Steel Fabricators, Inc.
http://www.centralsteelfab.com ◆ 2100 Parkes Drive, Broadview, IL 60155
Phone: 708-652-2037 Fax: 708-652-7010

ICR22CN – Adjustable Intermediate Cable Rack Kit [2.00” Cable Rack] - Continuity

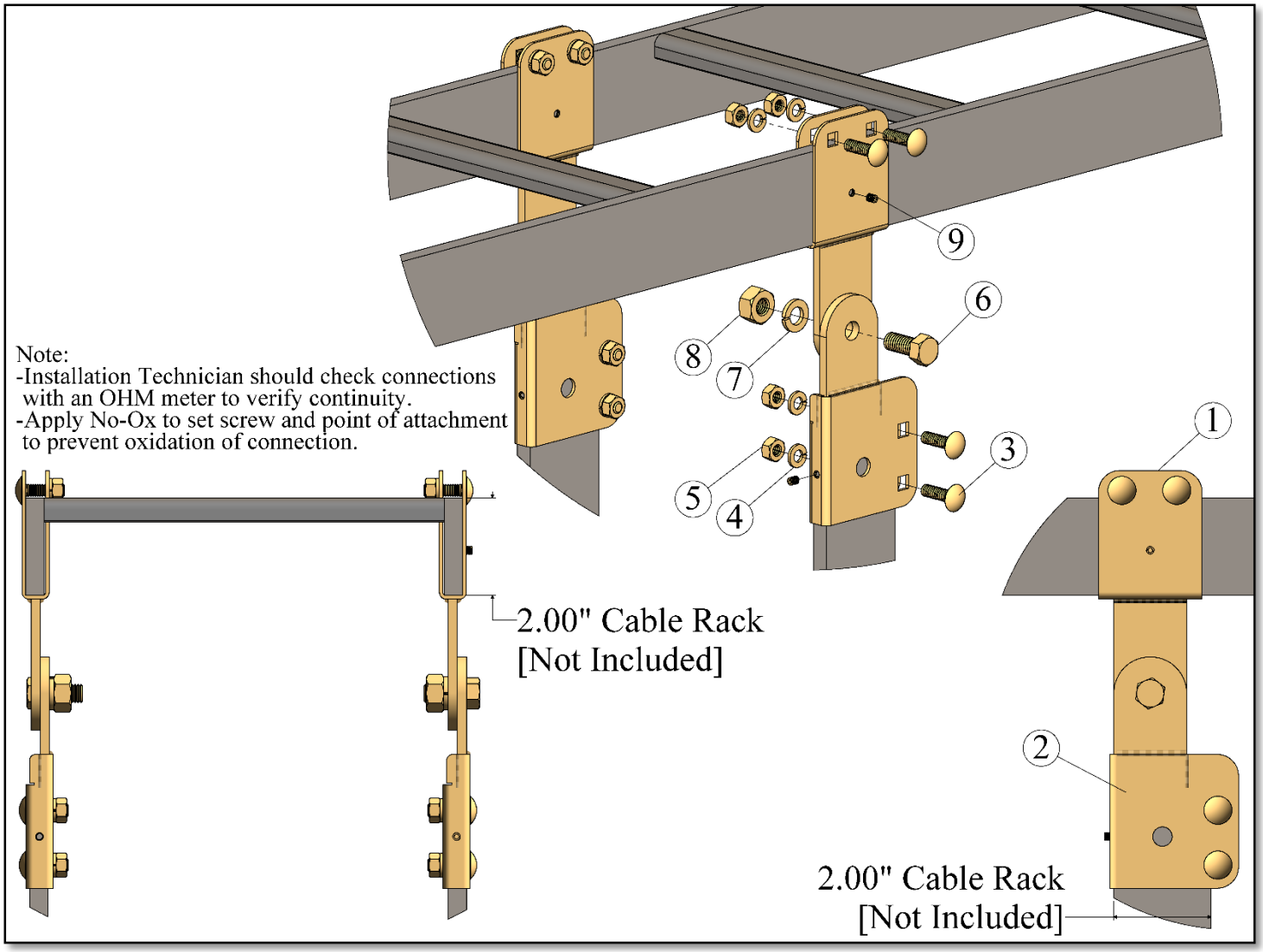

ICR22CN – Adjustable Intermediate Cable Rack Kit [2.00” Cable Rack] - Continuity			
Item#	CSF P/N#	Description	QTY
1	ICR2BCN	Adjustable Intermediate Bracket [2.00” Cable Rack] - Continuity	2
2	SCA2BCN	Adjustable Straight Bracket [2.00” Cable Rack] - Continuity	2

AC Hardware – Adjustable Clamp Kit Hardware			
Item#	CSF P/N#	Description	QTY
3	CB0604	1/4-20 x .88” Lg. – Carriage Bolt	8
4	LW154	1/4” Spring Lock Washer	8
5	HN144	1/4-20 Hex Nut	8
6	HH1004	3/8-16 Hex Head Cap Screw x .88” Lg.	2
7	LW156	3/8” Spring Lock Washer	2
8	HN146	3/8-16 Hex Nut	2
9	SS0303	10-32 x 3/16 Socket Set Screw	2

Specifications subject to change. Please contact CSF Customer Service for more information. RVSD*1217

© copyright 2004 Central Steel Fabricators, Inc.
http://www.centralsteelfab.com ◆ 2100 Parkes Drive, Broadview, IL 60155
Phone: 708-652-2037 Fax: 708-652-7010

SCA12 – Adjustable Straight Bracket Kit [1.50” Cable Rack]

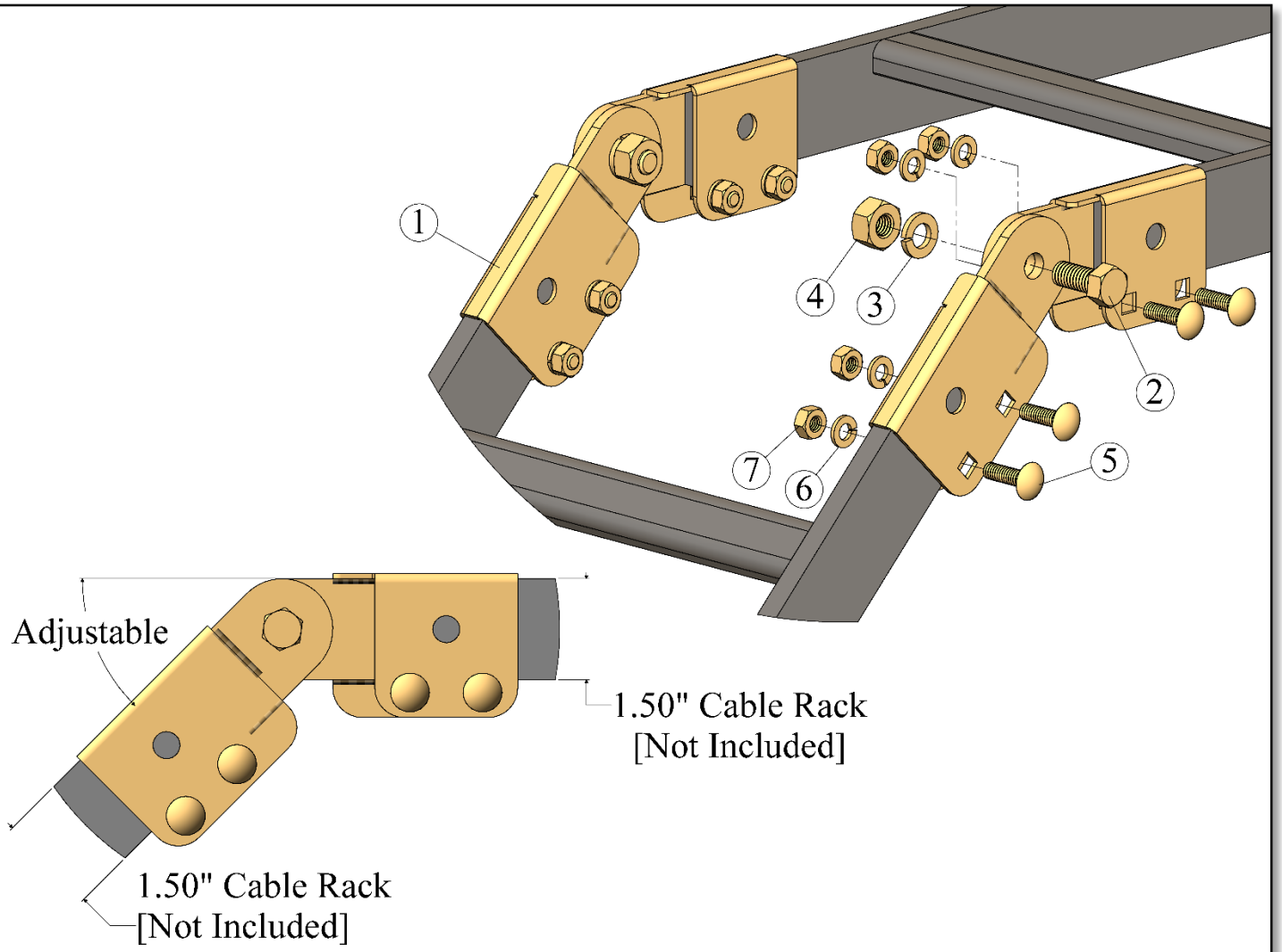

SCA12 – Adjustable Straight Bracket Kit [1.50” Cable Rack]			
Item#	CSF P/N#	Description	QTY
1	SCA1B	Adjustable Straight Bracket [1.50” Cable Rack]	4

AC Hardware – Adjustable Clamp Kit Hardware			
Item#	CSF P/N#	Description	QTY
2	HH1004	3/8-16 Hex Head Cap Screw x .88” Lg.	2
3	LW156	3/8” Spring Lock Washer	2
4	HN146	3/8-16 Hex Nut	2
5	CB0604	1/4-20 x .88” Lg. – Carriage Bolt	8
6	LW154	1/4” Spring Lock Washer	8
7	HN144	1/4-20 Hex Nut	8

Notes: Zinc and Yellow finish is UL grounding conductor classified

Specifications subject to change. Please contact CSF Customer Service for more information.

© copyright 2004 Central Steel Fabricators, Inc.
http://www.centralsteelfab.com ◆ 2100 Parkes Drive, Broadview, IL 60155
Phone: 708-652-2037 Fax: 708-652-7010

SCA12CN – Adjustable Straight Bracket Kit [1.50” Cable Rack] - Continuity

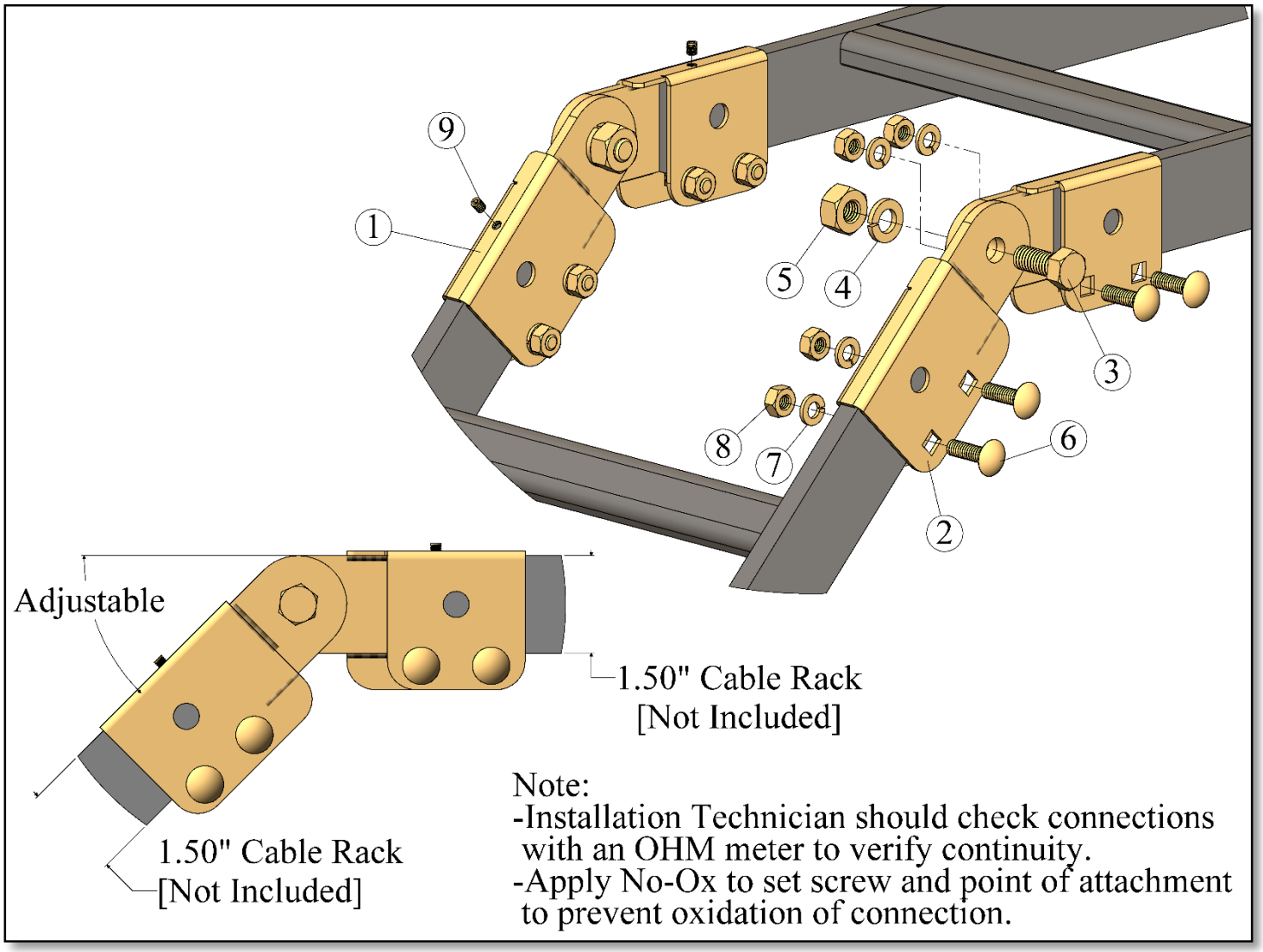

SCA12CN – Adjustable Straight Bracket Kit [1.50” Cable Rack] – Continuity			
Item#	CSF P/N#	Description	QTY
1	SCA1BCN	Adjustable Straight Bracket [1.50” Cable Rack] - Continuity	2
2	SCA1B	Adjustable Straight Bracket [1.50” Cable Rack]	2

AC Hardware – Adjustable Clamp Kit Hardware			
Item#	CSF P/N#	Description	QTY
3	HH1004	3/8-16 Hex Head Cap Screw x .88” Lg.	2
4	LW156	3/8” Spring Lock Washer	2
5	HN146	3/8-16 Hex Nut	2
6	CB0604	1/4-20 x .88” Lg. – Carriage Bolt	8
7	LW154	1/4” Spring Lock Washer	8
8	HN144	1/4-20 Hex Nut	8
9	SS0303	10-32 x 3/16” Socket Set Screw	2

Specifications subject to change. Please contact CSF Customer Service for more information.

© copyright 2004 Central Steel Fabricators, Inc.

http://www.centralsteelfab.com ◆ 2100 Parkes Drive, Broadview, IL 60155
Phone: 708-652-2037 Fax: 708-652-7010

SCA22 – Adjustable Straight Bracket Kit [2.00” Cable Rack]

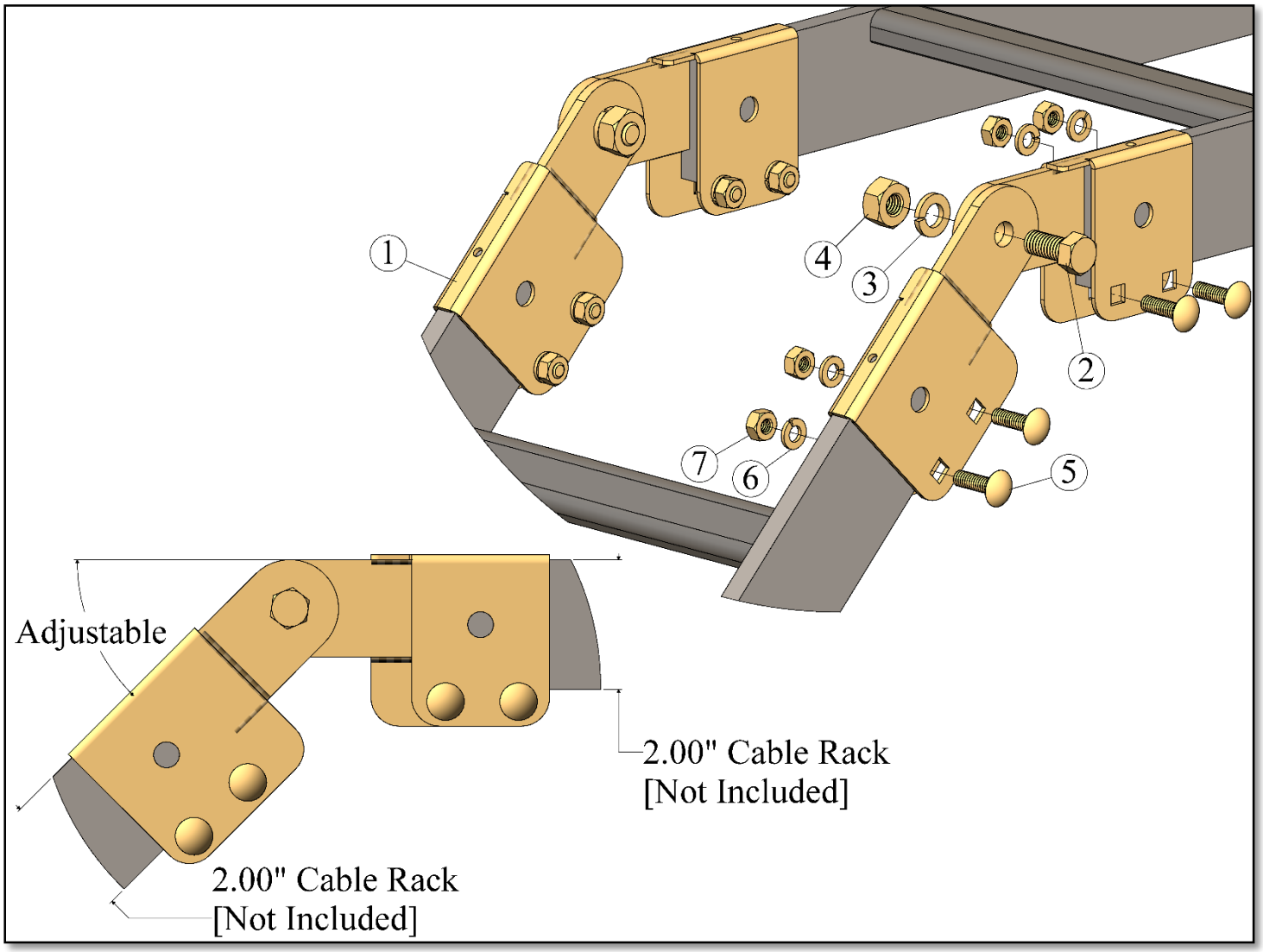

SCA22 – Adjustable Straight Bracket Kit [2.00” Cable Rack]			
Item#	CSF P/N#	Description	QTY
1	SCA2B	Adjustable Straight Bracket [2.00” Cable Rack]	4

AC Hardware – Adjustable Clamp Kit Hardware			
Item#	CSF P/N#	Description	QTY
2	HH1004	3/8-16 Hex Head Cap Screw x .88” Lg.	2
3	LW156	3/8” Spring Lock Washer	2
4	HN146	3/8-16 Hex Nut	2
5	CB0604	1/4-20 x .88” Lg. – Carriage Bolt	8
6	LW154	1/4” Spring Lock Washer	8
7	HN144	1/4-20 Hex Nut	8

Notes: Zinc and Yellow finish is UL grounding conductor classified

Specifications subject to change. Please contact CSF Customer Service for more information.

© copyright 2004 Central Steel Fabricators, Inc.
http://www.centralsteelfab.com ◆ 2100 Parkes Drive, Broadview, IL 60155
Phone: 708-652-2037 Fax: 708-652-7010

SCA22CN – Adjustable Straight Bracket Kit [2.00” Cable Rack] Continuity

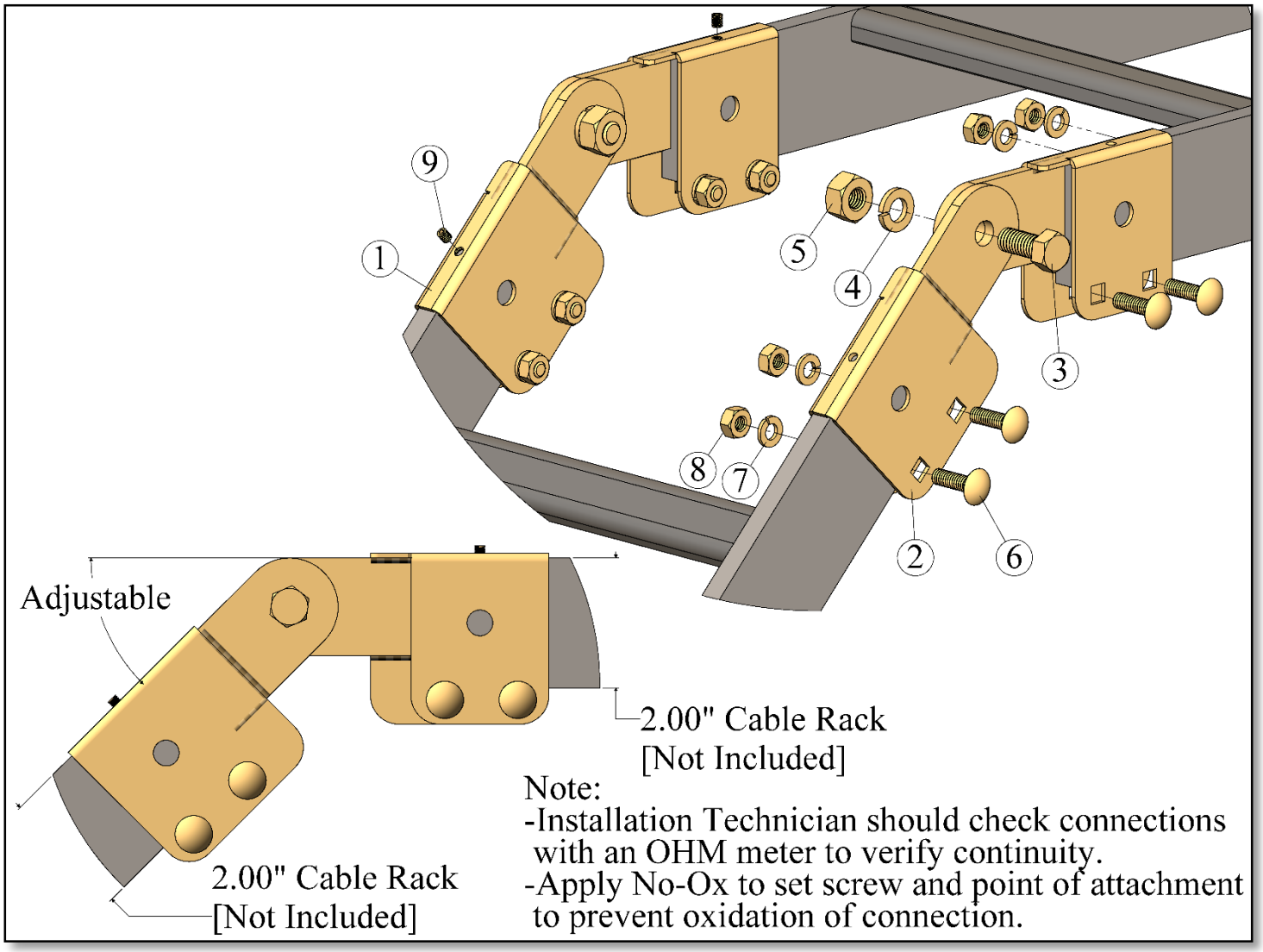

SCA22CN – Adjustable Straight Bracket Kit [2.00” Cable Rack] Continuity			
Item#	CSF P/N#	Description	QTY
1	SCA2BCN	Adjustable Straight Bracket [2.00” Cable Rack] Continuity	2
2	SCA2B	Adjustable Straight Bracket [2.00” Cable Rack]	2

AC Hardware – Adjustable Clamp Kit Hardware			
Item#	CSF P/N#	Description	QTY
3	HH1004	3/8-16 Hex Head Cap Screw x .88” Lg.	2
4	LW156	3/8” Spring Lock Washer	2
5	HN146	3/8-16 Hex Nut	2
6	CB0604	1/4-20 x .88” Lg. – Carriage Bolt	8
7	LW154	1/4” Spring Lock Washer	8
8	HN144	1/4-20 Hex Nut	8
9	SS0303	10-32 x 3/16” Socket Set Screw	2

Specifications subject to change. Please contact CSF Customer Service for more information. RVSD*1217

© copyright 2004 Central Steel Fabricators, Inc.
http://www.centralsteelfab.com ◆ 2100 Parkes Drive, Broadview, IL 60155
Phone: 708-652-2037 Fax: 708-652-7010

SCA22DW – Adjustable Straight Bracket Kit [1.50” to 2.00” Cable Rack]

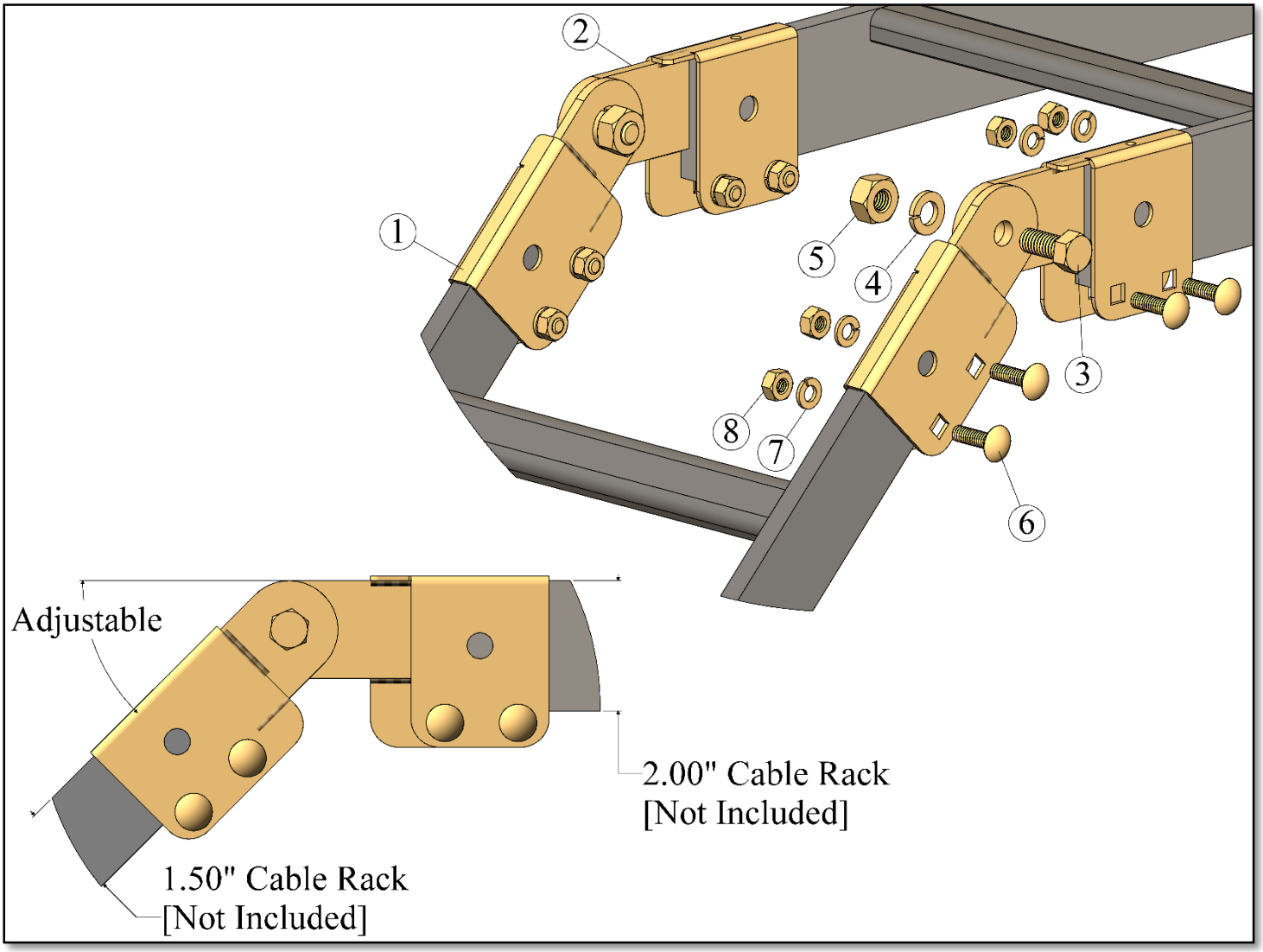

SCA22DW – Adjustable Straight Bracket Kit [1.50” to 2.00” Cable Rack]			
Item#	CSF P/N#	Description	QTY
1	SCA1B	Adjustable Straight Bracket [1.50” Cable Rack] Continuity	2
2	SCA2B	Adjustable Straight Bracket [2.00” Cable Rack]	2

AC Hardware – Adjustable Clamp Kit Hardware			
Item#	CSF P/N#	Description	QTY
3	HH1004	3/8-16 Hex Head Cap Screw x .88” Lg.	2
4	LW156	3/8” Spring Lock Washer	2
5	HN146	3/8-16 Hex Nut	2
6	CB0604	1/4-20 x .88” Lg. – Carriage Bolt	8
7	LW154	1/4” Spring Lock Washer	8
8	HN144	1/4-20 Hex Nut	8

Specifications subject to change. Please contact CSF Customer Service for more information.

© copyright 2004 Central Steel Fabricators, Inc. RVSD*1217
http://www.centralsteelfab.com ◆ 2100 Parkes Drive, Broadview, IL 60155
Phone: 708-652-2037 Fax: 708-652-7010

SCA22DWCN – Adjustable Straight Bracket Kit [1.50” to 2.00” Cable Rack] Continuity

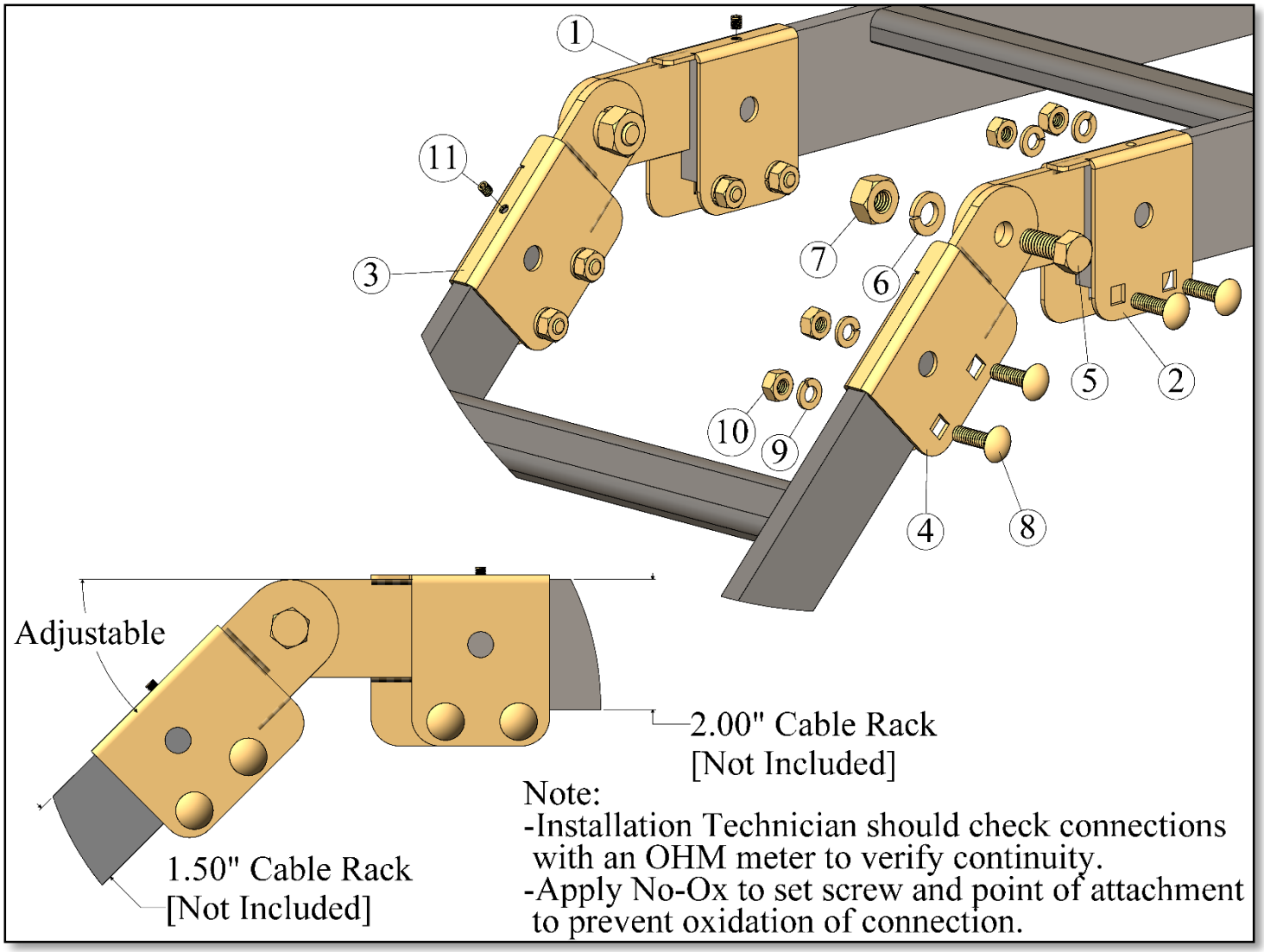

SCA22DWCN – Adjustable Straight Bracket Kit [1.50” to 2.00” Cable Rack] Continuity			
Item#	CSF P/N#	Description	QTY
1	SCA2BCN	Adjustable Straight Bracket [2.00” Cable Rack] Continuity	1
2	SCA2B	Adjustable Straight Bracket [2.00” Cable Rack]	1
3	SCA1BCN	Adjustable Straight Bracket [1.50” Cable Rack] Continuity	1
4	SCA1B	Adjustable Straight Bracket [1.50” Cable Rack]	1

AC Hardware – Adjustable Clamp Kit Hardware			
Item#	CSF P/N#	Description	QTY
5	HH1004	3/8-16 Hex Head Cap Screw x .88” Lg.	2
6	LW156	3/8” Spring Lock Washer	2
7	HN146	3/8-16 Hex Nut	2
8	CB0604	1/4-20 x .88” Lg. – Carriage Bolt	8
9	LW154	1/4” Spring Lock Washer	8
10	HN144	1/4-20 Hex Nut	8
11	SS0303	10-32 x 3/16” Socket Set Screw	2

Specifications subject to change. Please contact CSF Customer Service for more information.

© copyright 2004 Central Steel Fabricators, Inc. RVSD*1217

http://www.centralsteelfab.com ◆ 2100 Parkes Drive, Broadview, IL 60155
Phone: 708-652-2037 Fax: 708-652-7010

CABLE RACK ASSEMBLY UNEQUAL WIDTH

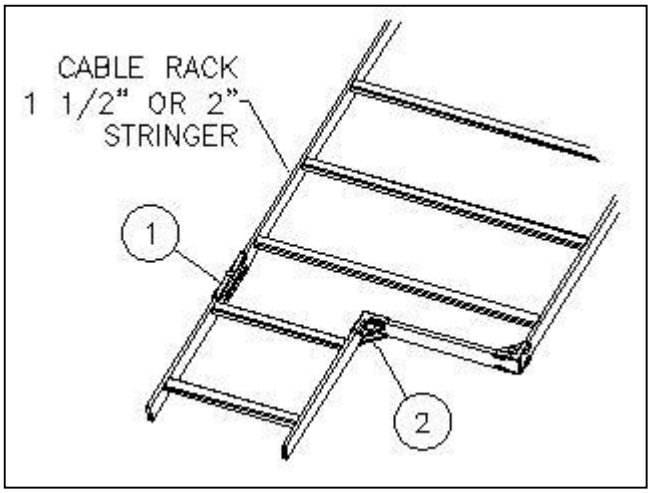

CRU2301-CRU2302			
ITEM#	CSF#	CRU2301(1 1/2")	CRU2302 (2")
1	SC1	1	0
1	SC2	0	1
2	CC1	2	0
2	CC2	0	2

Specifications subject to change. Please contact CSF Customer Service for more information.
© copyright 2004 Central Steel Fabricators, Inc.
http://www.centralsteelfab.com ◆ 2100 Parkes Drive, Broadview, IL 60155
Phone: 708-652-2037 Fax: 708-652-7010

CONNECT THREE UNEQUAL LENGTH CABLE RACKS

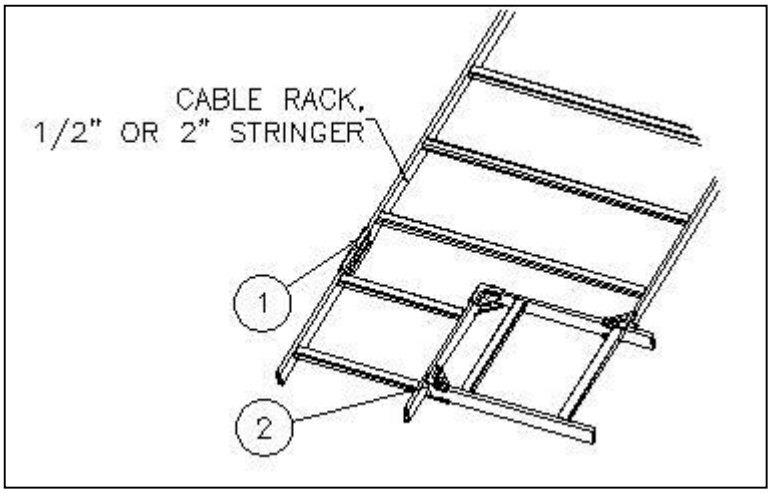

ITEM#	CSF#	CTC1801 (1 1/2")	CTC1802 (2")
1	SC1	1	0
1	SC2	0	1
2	CC1	3	0
2	CC2	0	3

Specifications subject to change. Please contact CSF Customer Service for more information.
© copyright 2004 Central Steel Fabricators, Inc.
http://www.centralsteelfab.com ◆ 2100 Parkes Drive, Broadview, IL 60155
Phone: 708-652-2037 Fax: 708-652-7010

BOLT HORIZONTAL RACK TO VERTICAL RACK

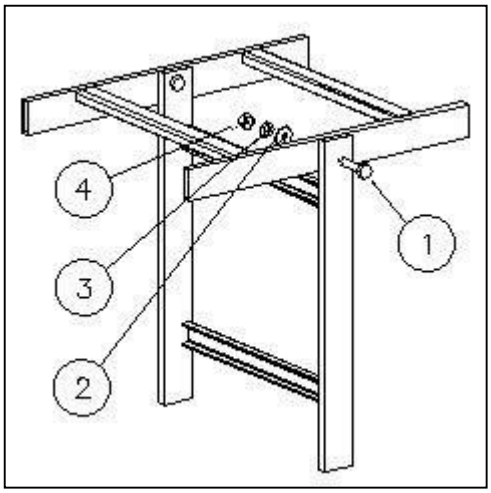

BCR8201		
ITEM#	CSF#	QTY
1	HH1007	2
2	FW166	2
3	LW156	2
4	HN146	2

NOTES:
-FINISH: ZINC AND YELLOW

Specifications subject to change. Please contact CSF Customer Service for more information.
© copyright 2004 Central Steel Fabricators, Inc.
http://www.centralsteelfab.com ◆ 2100 Parkes Drive, Broadview, IL 60155
Phone: 708-652-2037 Fax: 708-652-7010

INSULATE CABLE RACK "T" JUNCTION (1-1/2" & 2") TO STRINGER

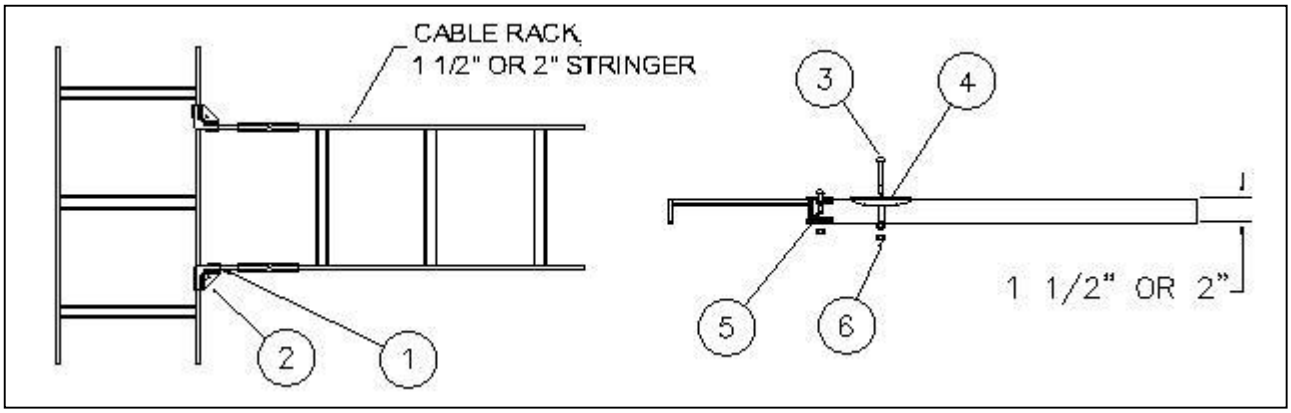

ITEM#	CSF#	ITJ1601 (1 1/2")	ITJ1602 (2")
1	IB7301	2	0
1	IB7302	0	2
2	CC	4	4
3	CB170	0	2
3	CB171	2	0
4	SC	4	4
5	CB172	2	0
5	CB173	0	2
6	HN146	4	4

Specifications subject to change. Please contact CSF Customer Service for more information.
© copyright 2004 Central Steel Fabricators, Inc.
http://www.centralsteelfab.com ◆ 2100 Parkes Drive, Broadview, IL 60155
Phone: 708-652-2037 Fax: 708-652-7010

INSULATE CABLE RACK JUNCTION (1-1/2" & 2") TO STRINGER

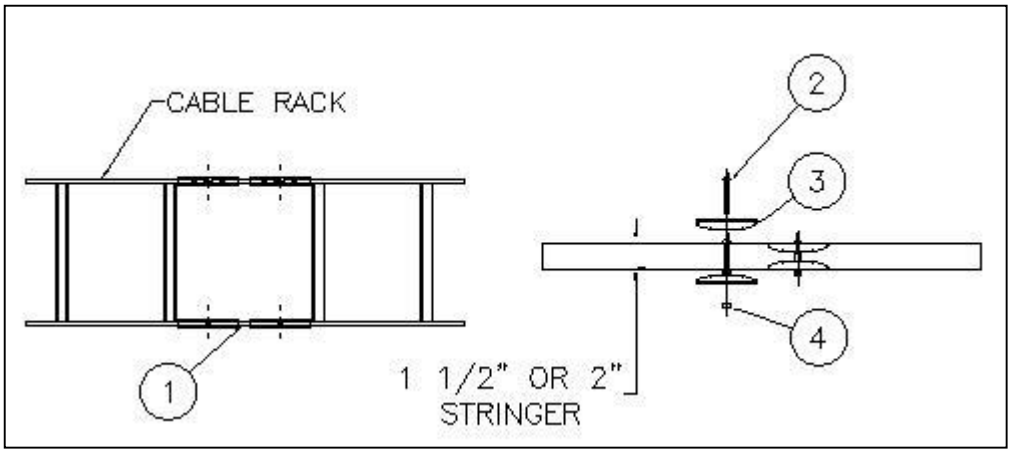

ITEM#	CSF#	IJC1501 (1 1/2")	IJC1502 (2")
1	IB7301	2	0
1	IB7302	0	2
2	CB172	4	0
2	CB173	0	4
3	SC	8	8
4	HN146	4	4

Specifications subject to change. Please contact CSF Customer Service for more information.
© copyright 2004 Central Steel Fabricators, Inc.
http://www.centralsteelfab.com ◆ 2100 Parkes Drive, Broadview, IL 60155
Phone: 708-652-2037 Fax: 708-652-7010

CABLE RACK ASSEMBLY - 3 RACK

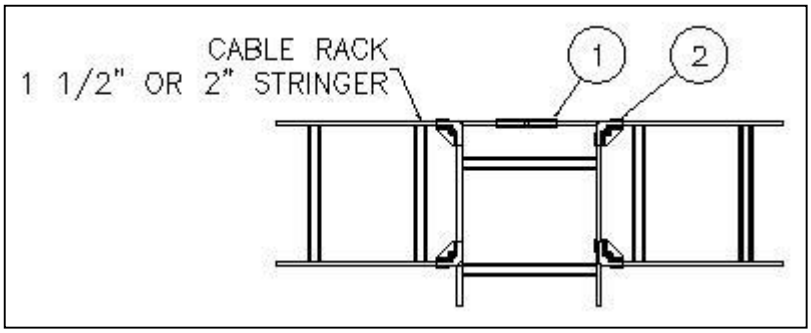

ITEM	CSF#	CRA2201 (1 1/2")	CRA2202 (2")
1	SC1	1	0
1	SC2	0	1
2	CC1	4	0
2	CC2	0	4

Specifications subject to change. Please contact CSF Customer Service for more information.
© copyright 2004 Central Steel Fabricators, Inc.
http://www.centralsteelfab.com ◆ 2100 Parkes Drive, Broadview, IL 60155
Phone: 708-652-2037 Fax: 708-652-7010

CORNER BRACE ASSEMBLY

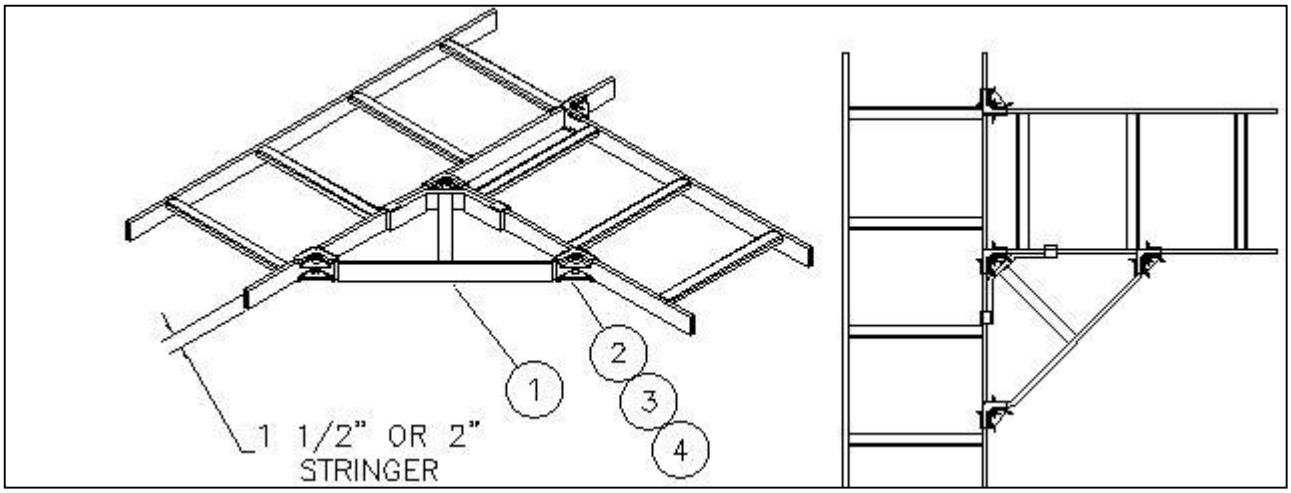

ITEM#	CSF#	CBT2401XX 1 1/2"	CBT2402XX 2"
1	CBT2401B	1	0
	CBT2402B	0	1
2	CB170	0	4
	CB171	4	0
3	HN146	4	4
4	CC	8	8

NOTES:
-ZINC AND YELLOW FINISH IS UL GROUNDING CONDUCTOR CLASSIFIED
-AVAILABLE IN DG OR ZINC AND YELLOW ONLY

Specifications subject to change. Please contact CSF Customer Service for more information.
© copyright 2004 Central Steel Fabricators, Inc.
http://www.centralsteelfab.com ◆ 2100 Parkes Drive, Broadview, IL 60155
Phone: 708-652-2037 Fax: 708-652-7010

CABLE RACK SUPPORT KITS

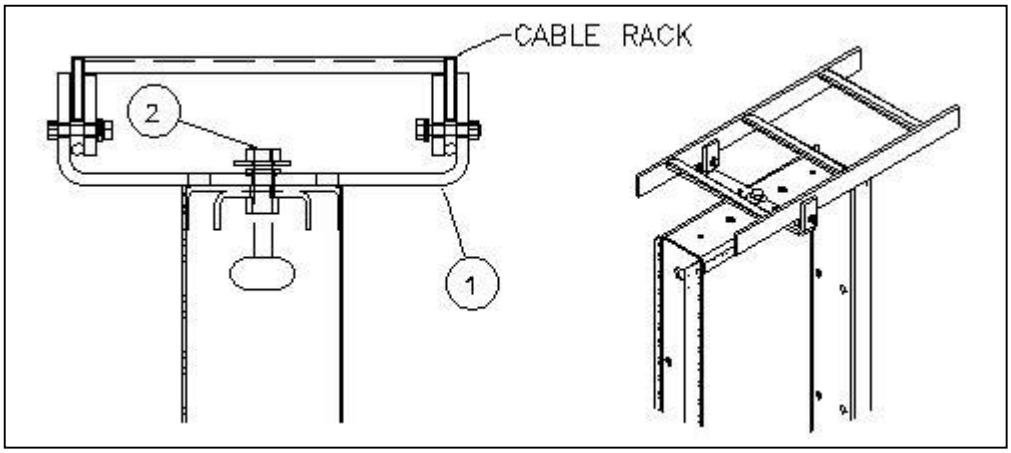

ITEM	CSF #	CUS12K	CUS24K	DESCRIPTION
1	CUS12	1	0	12" CABLE RACK SUPPORT BRACKET
1	CUS24	0	1	24" CABLE RACK SUPORT BRACKET
2	CUSHDWR	1	1	CABLE RACK SUPPORT HARDWARE

NOTES:
-OTHER SIZES AND FINISHES AVAILABLE UPON REQUEST

Specifications subject to change. Please contact CSF Customer Service for more information.
© copyright 2004 Central Steel Fabricators, Inc.
http://www.centralsteelfab.com ◆ 2100 Parkes Drive, Broadview, IL 60155
Phone: 708-652-2037 Fax: 708-652-7010

2142 INSTALLATION KIT

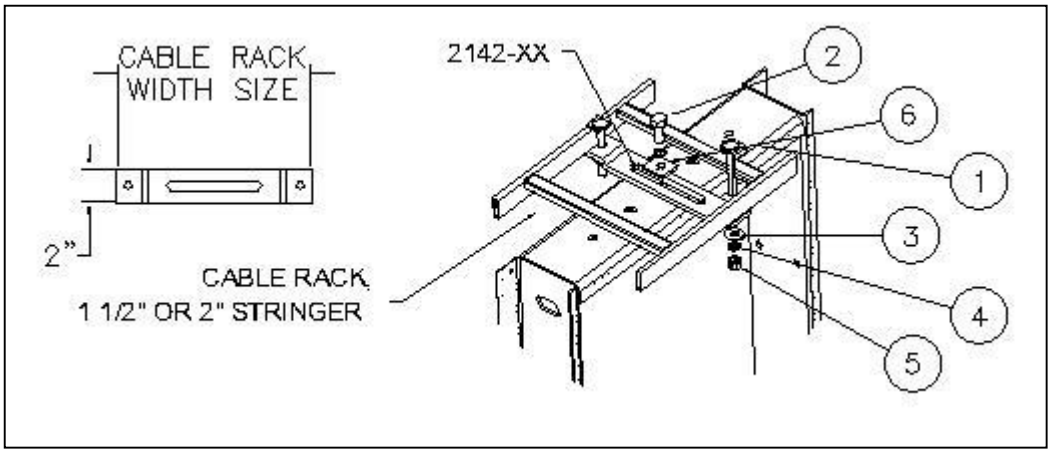

1 1/2" KITS	
KIT#	CABLE RACK WIDTH SIZE
2142-12K1	12"
2142-15K1	15"
2142-20K1	20"
2142-24K1	24"

2" KITS	
KIT#	CABLE RACK WIDTH SIZE
2142-12K2	12"
2142-15K2	15"
2142-20K2	20"
2142-24K2	24"

1 1/2" HARDWARE KIT		
ITEM #	CSF#	QTY
1	CJB09	2
2	HH1203	1
3	FW167	2
4	LWE157	2
4	LWE158	1
5	HN147	2
6	SW62	1

2" HARDWARE KIT		
ITEM #	CSF#	QTY
1	CJB03	2
2	HH1203	1
3	FW167	2
4	LWE157	2
4	LWE158	1
5	HN147	2
6	SW62	1

NOTES:
-OTHER WIDTHS AND FINISHES AVAILABLE UPON REQUEST

Specifications subject to change. Please contact CSF Customer Service for more information.
© copyright 2004 Central Steel Fabricators, Inc.
http://www.centralsteelfab.com ◆ 2100 Parkes Drive, Broadview, IL 60155
Phone: 708-652-2037 Fax: 708-652-7010

1 1/2" & 2" END BAR ASSEMBLY

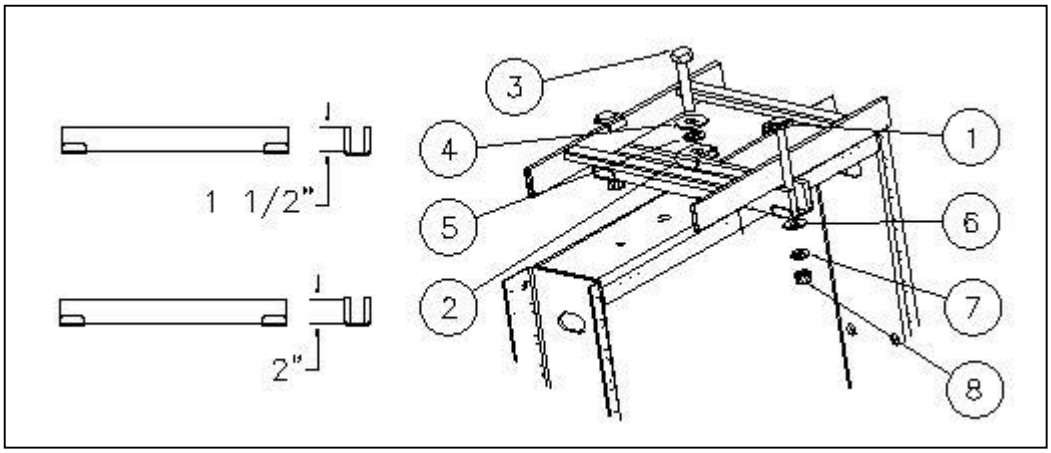

1 1/2" KITS	
CSF#	CABLE RACK WIDTH SIZE
EBA114XXK	12"
EBA117XXK	15"
EBA120XXK	18"
EBW114XXK	12"

2" KITS	
CSF#	CABLE RACK WIDTH SIZE
EBA214XXK	12"
EBA217XXK	15"
EBA220XXK	18"
EBW214XXK	12"

1 1/2" HARDWARE		
ITEM#	CSF#	QTY
1	CJB3	2
2	FC313	1
3	HH1209	1
4	FW168	1
5	LW158	1
6	FW167	2
7	LW157	2
8	HN147	2

2" HARDWARE		
ITEM#	CSF#	QTY
1	CJB4	2
2	FC313	1
3	HH1209	1
4	FW168	1
5	LW158	1
6	FW167	2
7	LW157	2
8	HN147	2

NOTES:
-FINISHES: SEE TECH DATA FOR PAINT CODES
-OTHER FINISHES AVAILABLE UPON REQUEST
-EBW IS USED WITH 5/8" HARDWARE
-EBA IS USED WITH 1/2" HARDWARE

Specifications subject to change. Please contact CSF Customer Service for more information.
© copyright 2004 Central Steel Fabricators, Inc.
http://www.centralsteelfab.com ◆ 2100 Parkes Drive, Broadview, IL 60155
Phone: 708-652-2037 Fax: 708-652-7010

SECOND LEVEL STRAP – 1.50" CABLE RACK

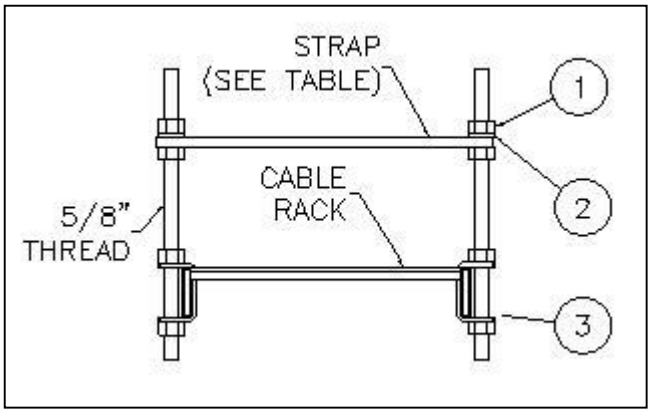

CSF#	LENGTH
SLS4801	5"
SLS4802	6"
SLS4806	12"
SLS48007	15"
SLS4808	18"
SLS4811	24"

SLS HARDWARE		
ITEM	CSF#	QTY
1	HN148	8
2	LW158	4
3	HB1	2

NOTES:
-ASSEMBLY INCLUDES HARDWARE

Specifications subject to change. Please contact CSF Customer Service for more information.
© copyright 2004 Central Steel Fabricators, Inc.
http://www.centralsteelfab.com ◆ 2100 Parkes Drive, Broadview, IL 60155
Phone: 708-652-2037 Fax: 708-652-7010

SECOND LEVEL STRAP – 2.00" CABLE RACK

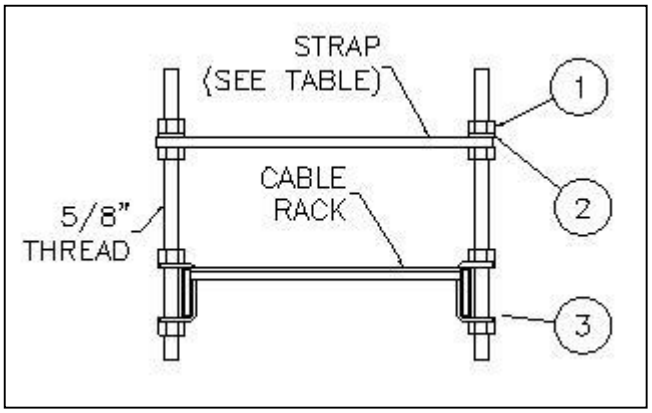

CSF#	LENGTH
SLS4815	5"
SLS4816	6"
SLS4820	12"
SLS4821	15"
SLS4822	18"
SLS4823	20"
SLS4824	24"

SLS HARDWARE		
ITEM	CSF#	QTY
1	HN148	8
2	LW158	4
3	HB2	2

NOTES:
-ASSEMBLY INCLUDES HARDWARE

Specifications subject to change. Please contact CSF Customer Service for more information.
© copyright 2004 Central Steel Fabricators, Inc.
http://www.centralsteelfab.com ◆ 2100 Parkes Drive, Broadview, IL 60155
Phone: 708-652-2037 Fax: 708-652-7010

HANGER BRACKET KITS

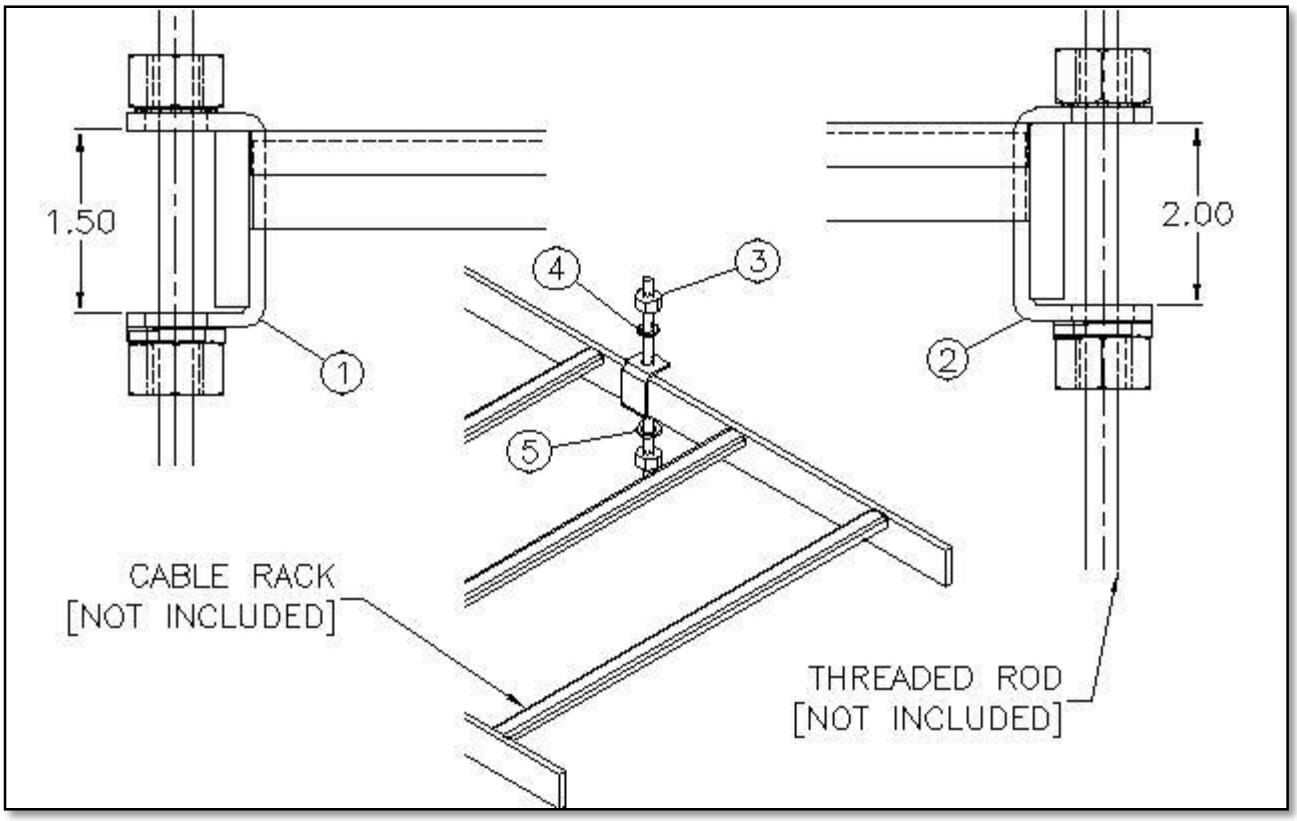

ITEM	CSF#	HB11	HB12	HB14	HB21	HB22	HB24	DESCRIPTION
1	HB1	1	2	4	0	0	0	1.50" HANGER BRACKET
2	HB2	0	0	0	1	2	4	2.00" HANGER BRACKET
3	HN148	2	4	8	2	4	8	5/8"-11 HEX NUT
4	LWE158	1	2	4	1	2	4	5/8" EXTERNAL TOOTH LOCKWASHER
5	LW158	1	2	4	1	2	4	5/8" SPRING LOCKWASHER

NOTES:
-FINISH: ZINC AND YELLOW

RVSD*0714

Specifications subject to change. Please contact CSF Customer Service for more information.

© copyright 2004 Central Steel Fabricators, Inc.
http://www.centralsteelfab.com ◆ 2100 Parkes Drive, Broadview, IL 60155
Phone: 708-652-2037 Fax: 708-652-7010

SHBXX SLOTTED HANGER BRACKET KITS

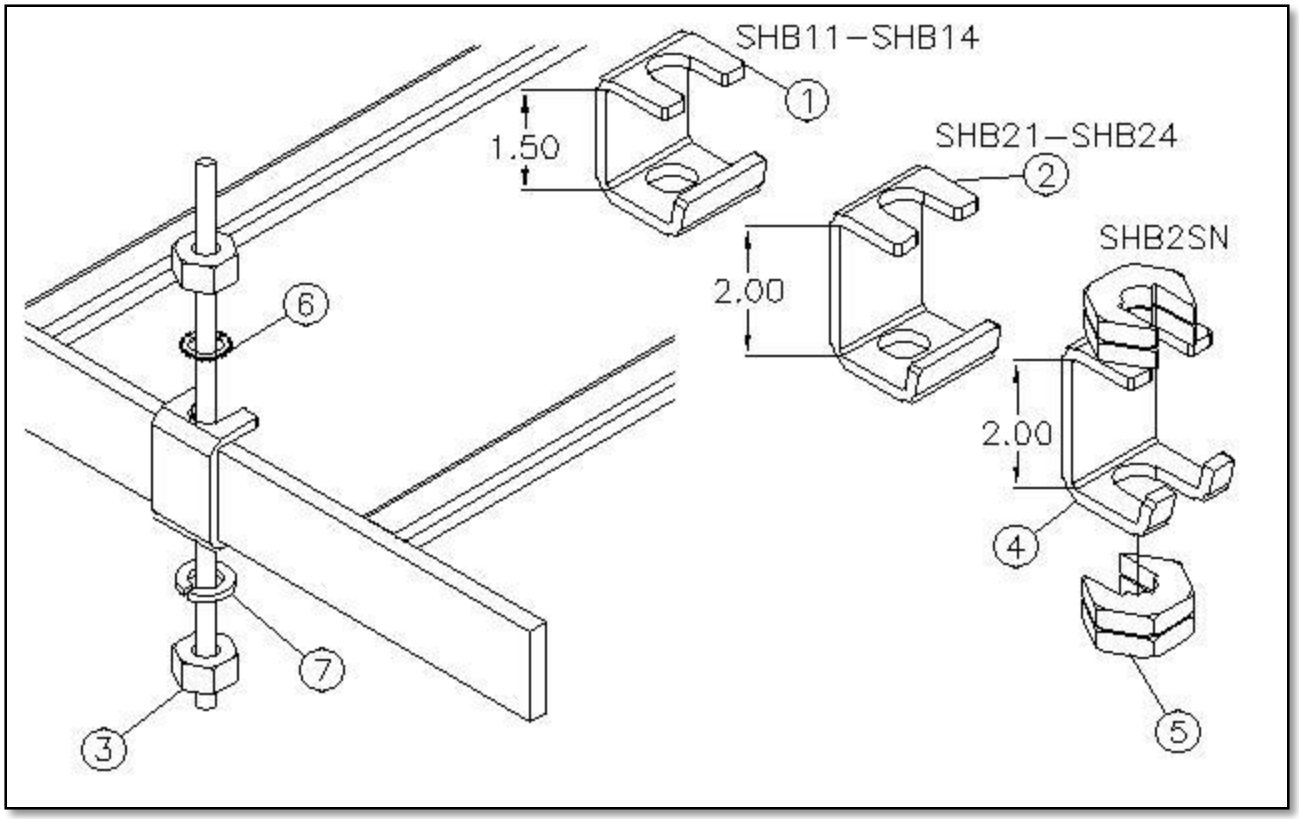

1.50" SLOTTED HANGER BRACKET KITS					
ITEM	CSF#	SHB11	SHB12	SHB14	DESCRIPTION
1	SHB1	1	2	4	1.50" SLOTTED HANGER BRACKET
3	HN148	2	4	8	5/8"-11 HEX NUT
6	LWE158	1	2	4	5/8" EXT. TOOTH LOCKWASHER
7	LW158	1	2	4	5/8" SPRING LOCKWASHER

2.00" SLOTTED HANGER BRACKET KITS					
ITEM	CSF#	SHB21	SHB22	SHB24	DESCRIPTION
2	SHB2	1	2	4	2.00" SLOTTED HANGER BRACKET
3	HN148	2	4	8	5/8"-11 HEX NUT
6	LWE158	1	2	4	5/8" EXT. TOOTH LOCKWASHER
7	LW158	1	2	4	5/8" SPRING LOCKWASHER

2.00" EXISTING THREADED ROD SLOTTED HANGER BRACKET KIT W/ SPLIT NUTS			
ITEM	CSF#	SHB2SN	DESCRIPTION
4	SHB2M	1	2.00" EXISTING THREADED ROD SLOTTED HANGER BRACKET
5	HNS62	2	5/8"-11 SPLIT LOCKING HEX NUT – ZY

2.00" EXISTING THREADED ROD SLOTTED HANGER BRACKET KIT W/ SPLIT NUTS			
ITEM	CSF#	SHB22SN	DESCRIPTION
4	SHB2M	2	2.00" EXISTING THREADED ROD SLOTTED HANGER BRACKET
5	HNS62	4	5/8"-11 SPLIT LOCKING HEX NUT – ZY

NOTES:
-FINISH: ZINC AND YELLOW
-SHB2SN IS INTENDED FOR USE IN SITUATIONS WHERE THE END OF THE EXISTING THREADED ROD CANNOT BE ACCESSED
-CABLE RACK AND THREADED ROD NOT INCLUDED

Specifications subject to change. Please contact CSF Customer Service for more information.

© copyright 2004 Central Steel Fabricators, Inc.
http://www.centralsteelfab.com ◆ 2100 Parkes Drive, Broadview, IL 60155
Phone: 708-652-2037 Fax: 708-652-7010

SCR6901 SUPPORT – 5” CABLE RACK

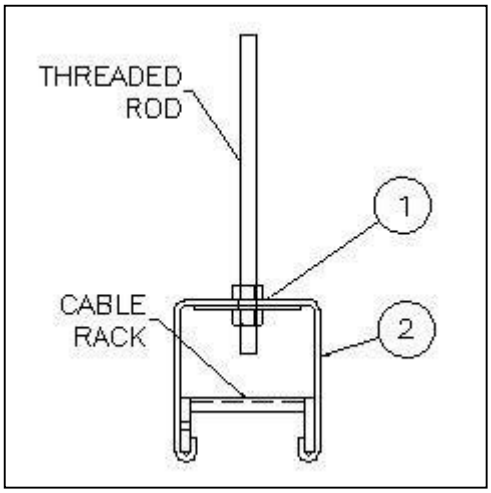

SCR6901	
ITEM	CSF#
1	HN148
2	6901

Specifications subject to change. Please contact CSF Customer Service for more information.

© copyright 2004 Central Steel Fabricators, Inc.
http://www.centralsteelfab.com ◆ 2100 Parkes Drive, Broadview, IL 60155
Phone: 708-652-2037 Fax: 708-652-7010

BCR6201 – BRACE KIT FOR CABLE RACK TO AUX. BAR

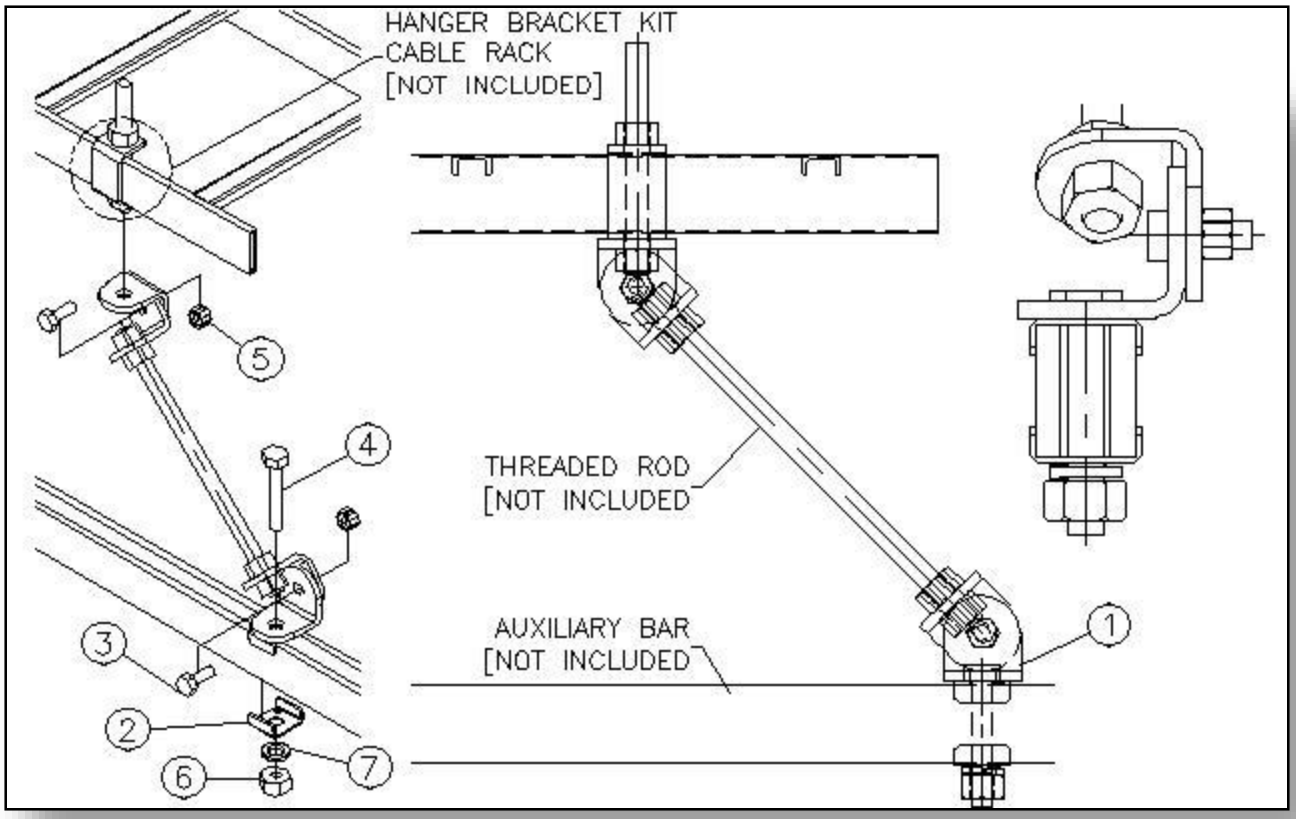

BCR6201 – BRACE KIT FOR CABLE RACK TO AUX. BAR			
ITEM	CSF#	QTY	DESCRIPTION
1	BB1	4	BRACING BRACKET 11/16” TO 9/16”
2	FC313	2	FRAMING CLIP
3	HH1104	2	1/2-13 HHCS X 1.25” LG. ZY
4	HH1210	1	5/8-11 HHCS X 3.25” LG. ZY
5	HN147	2	1/2-13 HEX NUT ZY
6	HN148	5	5/8-11 HEX NUT ZY
7	LW158	1	5/8” SPRING LOCK WASHER ZY

Specifications subject to change. Please contact CSF Customer Service for more information.
© copyright 2004 Central Steel Fabricators, Inc.
http://www.centralsteelfab.com ◆ 2100 Parkes Drive, Broadview, IL 60155
Phone: 708-652-2037 Fax: 708-652-7010

BCR6202 – BRACE KIT FOR CABLE RACK TO AUX. CHANNEL

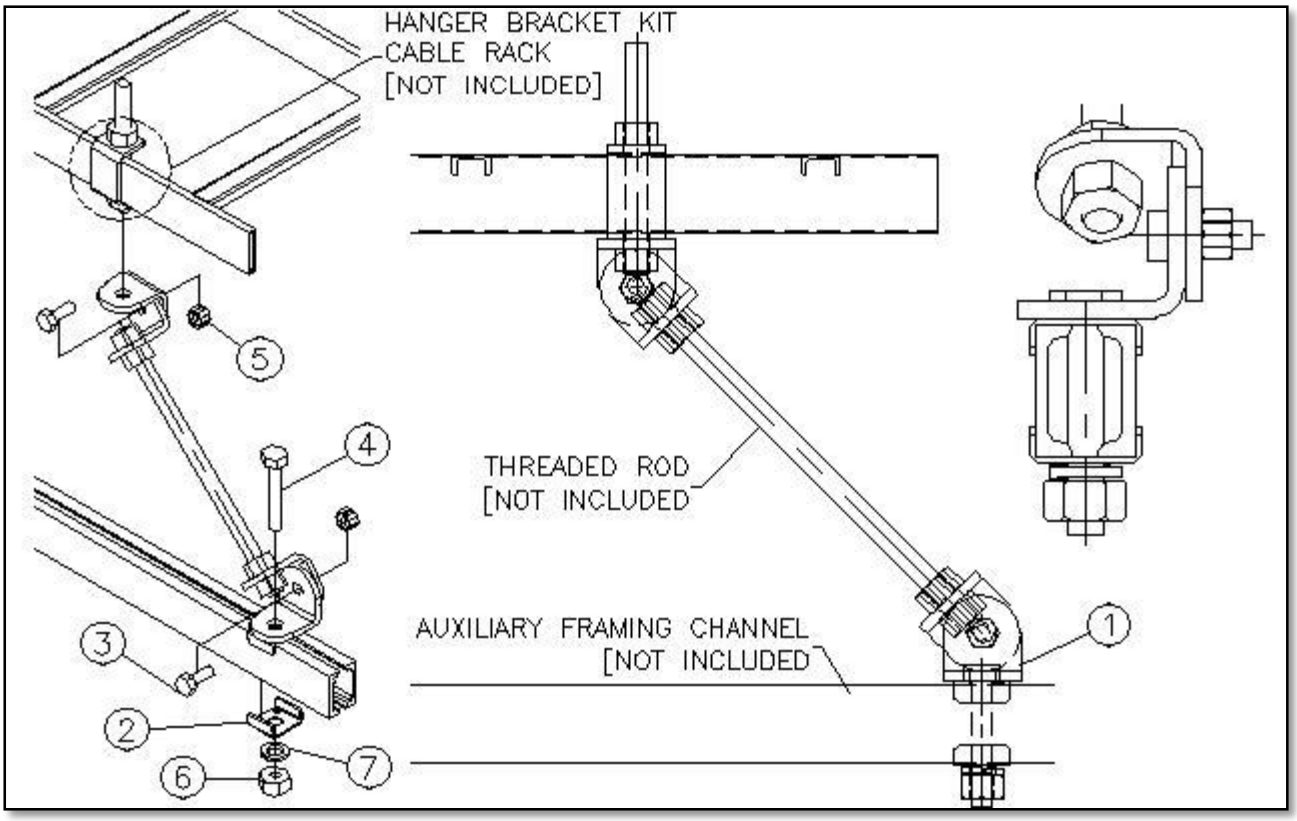

BCR6202 – BRACE KIT FOR CABLE RACK TO AUX. CHANNEL			
ITEM	CSF#	QTY	DESCRIPTION
1	BB1	4	BRACING BRACKET 11/16” TO 9/16”
2	FC316	2	FRAMING CLIP
3	HH1104	2	1/2-13 HHCS X 1.25” LG. ZY
4	HH1210	1	5/8-11 HHCS X 3.25” LG. ZY
5	HN147	2	1/2-13 HEX NUT ZY
6	HH148	5	5/8-11 HEX NUT ZY
7	LW158	1	5/8” SPRING LOCK WASHER ZY

Specifications subject to change. Please contact CSF Customer Service for more information.
© copyright 2004 Central Steel Fabricators, Inc.
http://www.centralsteelfab.com ◆ 2100 Parkes Drive, Broadview, IL 60155
Phone: 708-652-2037 Fax: 708-652-7010

BCR6203 – BRACE KIT FOR CABLE RACK TO AUX. CHANNEL

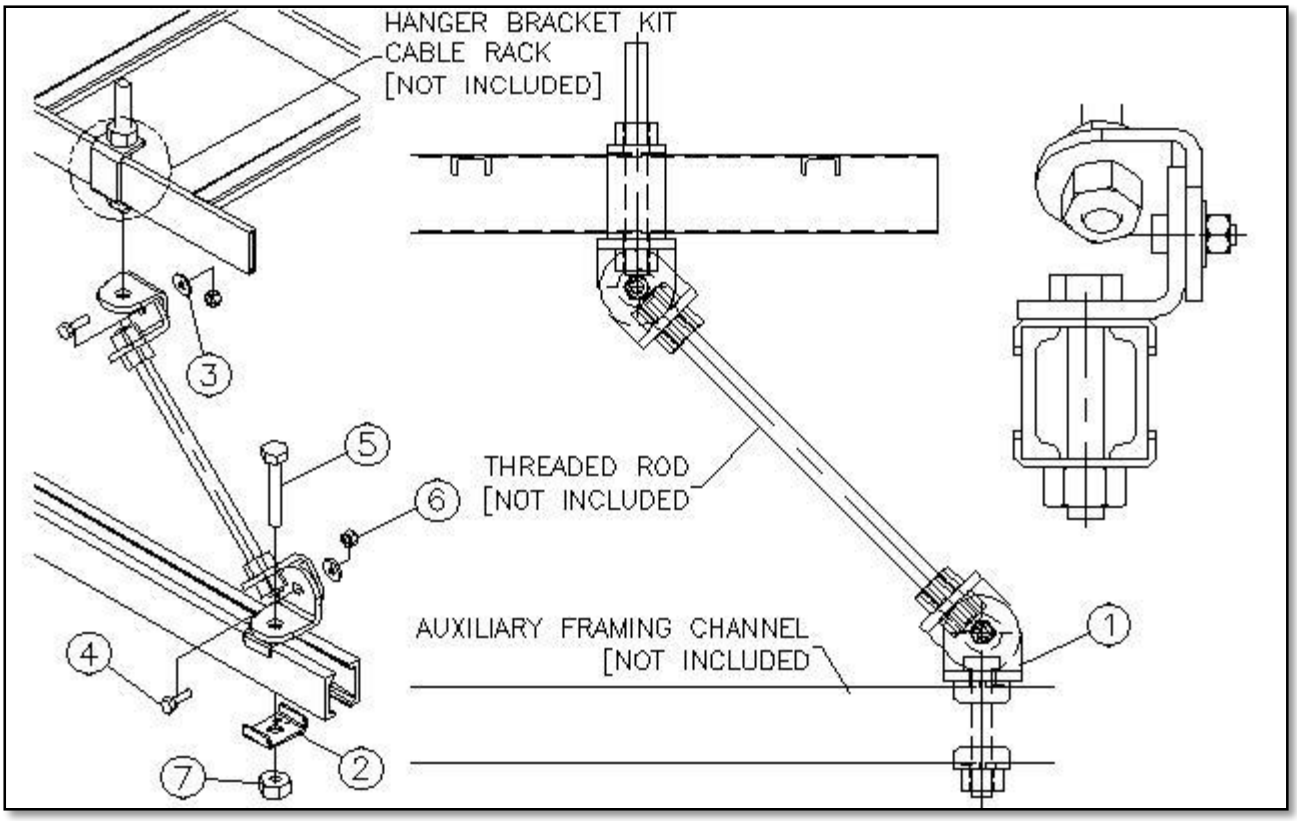

BCR6203 – BRACE KIT FOR CABLE RACK TO AUX. CHANNEL			
ITEM	CSF#	QTY	DESCRIPTION
1	BB1	4	BRACING BRACKET 11/16” TO 9/16”
2	FC316	2	FRAMING CLIP
3	FW166	2	3/8” FLAT WASHER ZY
4	HH1005	2	3/8-16 HHCS X 1.00” LG. ZY
5	HH1210	1	5/8-11 HHCS X 3.25” LG. ZY
6	HN146	2	3/8-16 HEX NUT ZY
7	HN148	7	5/8-11 HEX NUT ZY

Specifications subject to change. Please contact CSF Customer Service for more information.
© copyright 2004 Central Steel Fabricators, Inc.
http://www.centralsteelfab.com ◆ 2100 Parkes Drive, Broadview, IL 60155
Phone: 708-652-2037 Fax: 708-652-7010

BCR7022 – BRACING KIT 2.00” CABLE RACK TO 2.00” CABLE RACK

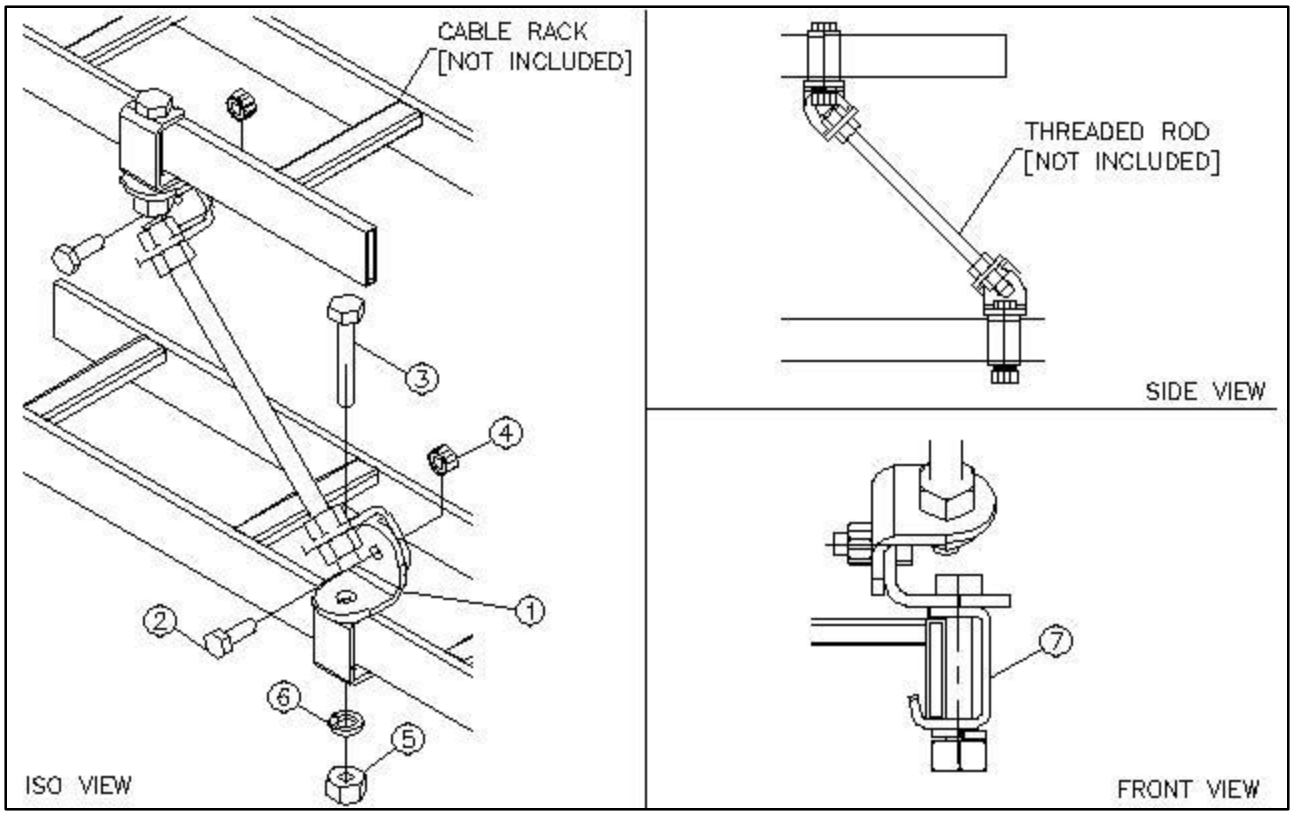

BCR7022 – BRACING KIT 2.00” CABLE RACK TO 2.00” CABLE RACK			
ITEM	CSF#	QTY	DESCRIPTION
1	BB1	4	BRACING BRACKET 11/16” TO 9/16”
2	HH1104	2	1/2-13 HHCS X 1.25” LG. ZY
3	HH1210	2	5/8-11 HHCS X 3.25” LG. ZY
4	HN147	2	1/2-13 HEX NUT ZY
5	HN148	6	5/8-11 HEX NUT ZY
6	LW158	2	5/8” SPRING LOCK WASHER ZY
7	SHB2	2	SLOTTED HANGER BRACKET [2.00” STRINGER]

Specifications subject to change. Please contact CSF Customer Service for more information.
© copyright 2004 Central Steel Fabricators, Inc.
http://www.centralsteelfab.com ◆ 2100 Parkes Drive, Broadview, IL 60155
Phone: 708-652-2037 Fax: 708-652-7010

BCR0123 – BRACING KIT FRAME TO CABLE RACK

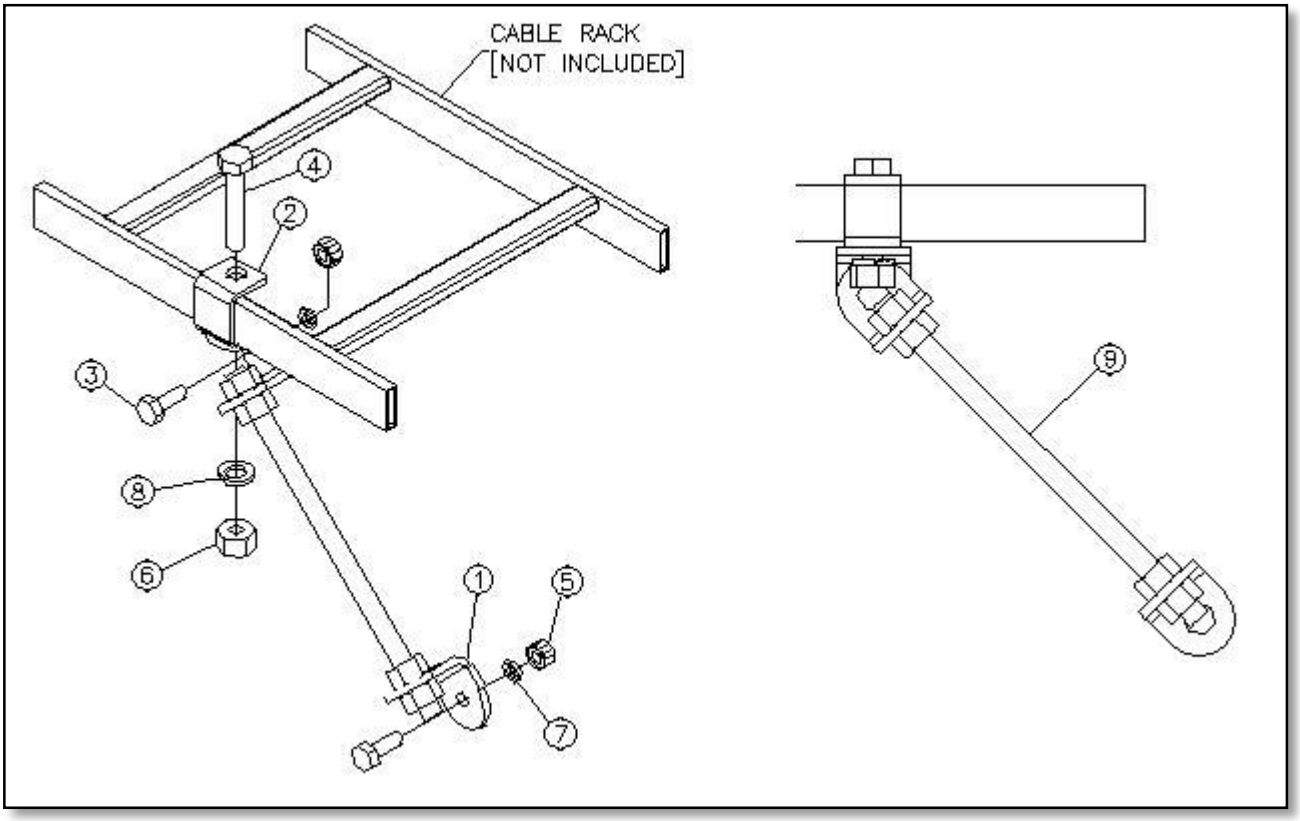

BCR0123 – BRACING KIT FRAME TO CABLE RACK			
ITEM	CSF#	QTY	DESCRIPTION
1	BB1	3	BRACING BRACKET 11/16” TO 9/16”
2	HB1	1	SIDE BAR HANGER BRACKET FOR 1.50” CABLE RACK
3	HH1104	2	1/2-13 HHCS X 1.25” LG. ZY
4	HH1209	1	5/8-11 HHCS X 3.00” LG. ZY
5	HN147	2	1/2-13 HEX NUT ZY
6	HN148	5	5/8-11 HEX NUT ZY
7	LW157	2	1/2” SPRING LOCK WASHER ZY
8	LW158	1	5/8” SPRING LOCK WASHER ZY
7	TR52	1	5/8-11 THREADED ROD X 18.00” LG. ZY

Specifications subject to change. Please contact CSF Customer Service for more information.
© copyright 2004 Central Steel Fabricators, Inc.
http://www.centralsteelfab.com ◆ 2100 Parkes Drive, Broadview, IL 60155
Phone: 708-652-2037 Fax: 708-652-7010

CABLE RACK PAN 120.00" LONG

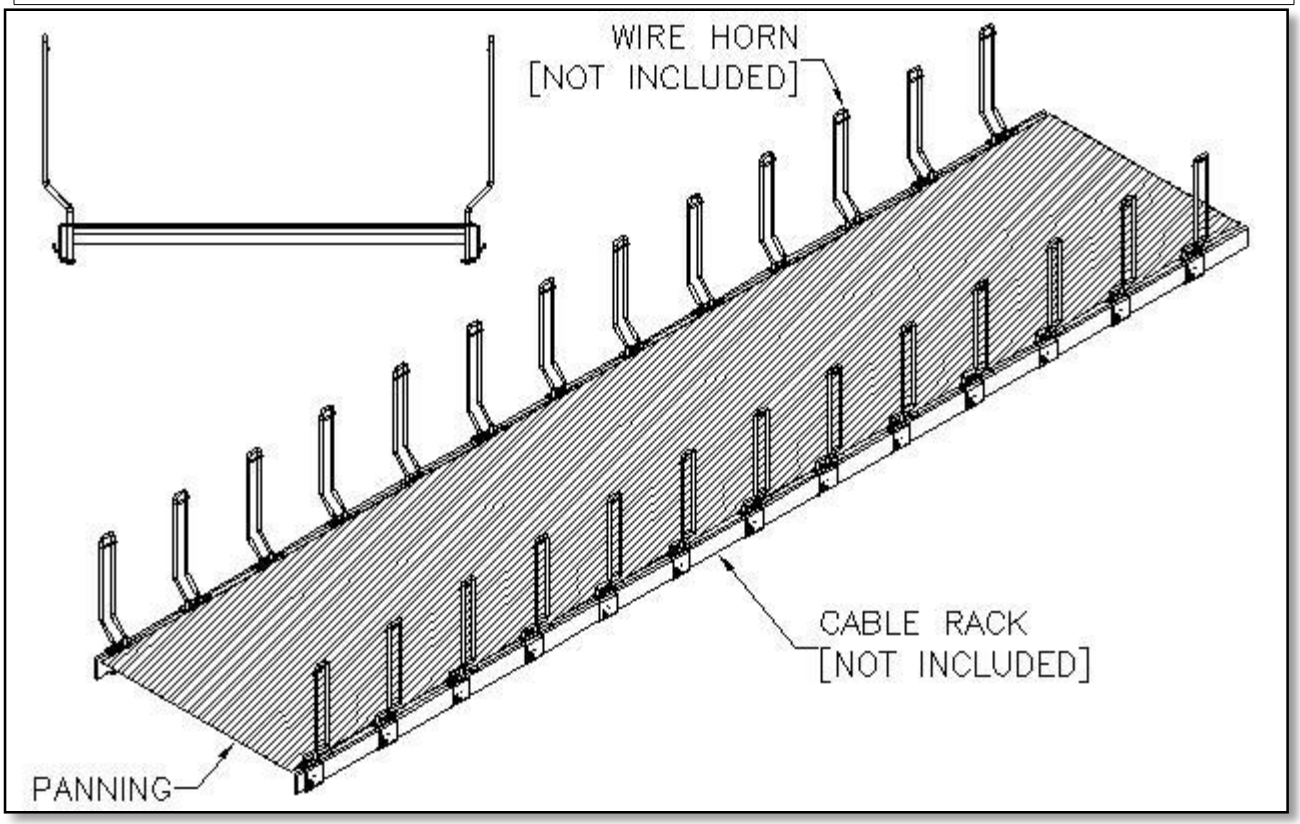

ALUMINUM PAN .03 THICK		
CSF#	CABLE RACK SIZE	PAN WIDTH
AP05	5.00"	3.50"
AP06	6.00"	4.50"
AP10	10.00"	8.50"
AP12	12.00"	10.50"
AP15	15.00"	13.50"
AP18	18.00"	16.50"
AP20	20.00"	18.50"
AP24	24.00"	22.50"
AP25	25.00"	23.50"
AP30	30.00"	28.50"

KYDEX PAN .03 THICK [FINISH: TELOCO GRAY]		
CSF#	CABLE RACK SIZE	PAN WIDTH
KY05DG	5.00"	3.25"
KY06DG	6.00"	4.25"
KY10DG	10.00"	8.25"
KY12DG	12.00"	10.25"
KY15DG	15.00"	13.25"
KY18DG	18.00"	16.25"
KY20DG	20.00"	18.25"
KY24DG	24.00"	22.25"
KY25DG	25.00"	23.25"
KY30DG	30.00"	28.25"

NOTES:

- ALUMINUM PAN IS UNPAINTED
- KYDEX PAN IS EXTREMELY DURABLE PLASTIC WITH A UL94 V-0 FLAMMABILITY RATING
- STAMPED EVERY 40.00" WITH UL94V-0 RATING.

RVSD*1115

12/19/2017

Specifications subject to change. Please contact CSF Customer Service for more information.

© copyright 2004 Central Steel Fabricators, Inc.
http://www.centralsteelfab.com ◆ 2100 Parkes Drive, Broadview, IL 60155
Phone: 708-652-2037 Fax: 708-652-7010

TOP MOUNTING ASSEMBLY – TMA2

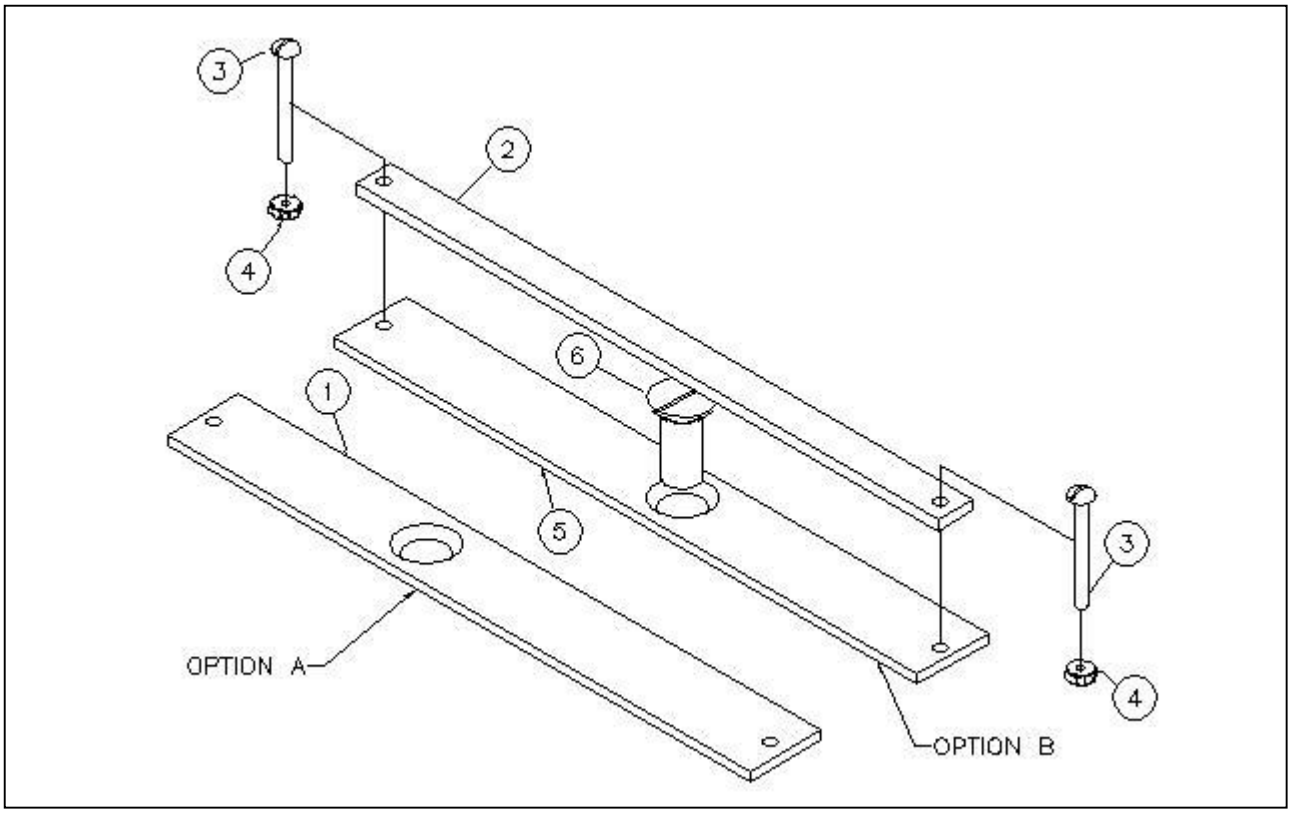

TOP MOUNTING ASSEMBLY – TMA2			
ITEM	QTY	PART#	DESCRIPTION
1	1	TMA2A	BAR, SUBPART 3/16” X 1.5 STEEL
2	1	TMA2B	BAR, SUBPART 3/16” X 3/4” STEEL
3	2	RH0410	ROUND HEAD #12-24UNC, 2” LONG
4	2	HN143	HEX NUT #12-24UNC
5	1	TMA2C	BAR, SUBPART 3/16” X 1.5 STEEL
6	1	FH1207	FLAT HEAD, 5/8” – 11, 1.5 LONG

Specifications subject to change. Please contact CSF Customer Service for more information.
© copyright 2004 Central Steel Fabricators, Inc.
http://www.centralsteelfab.com ◆ 2100 Parkes Drive, Broadview, IL 60155
Phone: 708-652-2037 Fax: 708-652-7010

CORNER KIT [SEISMIC] – 1.50” OR 2.00” CABLE RACK

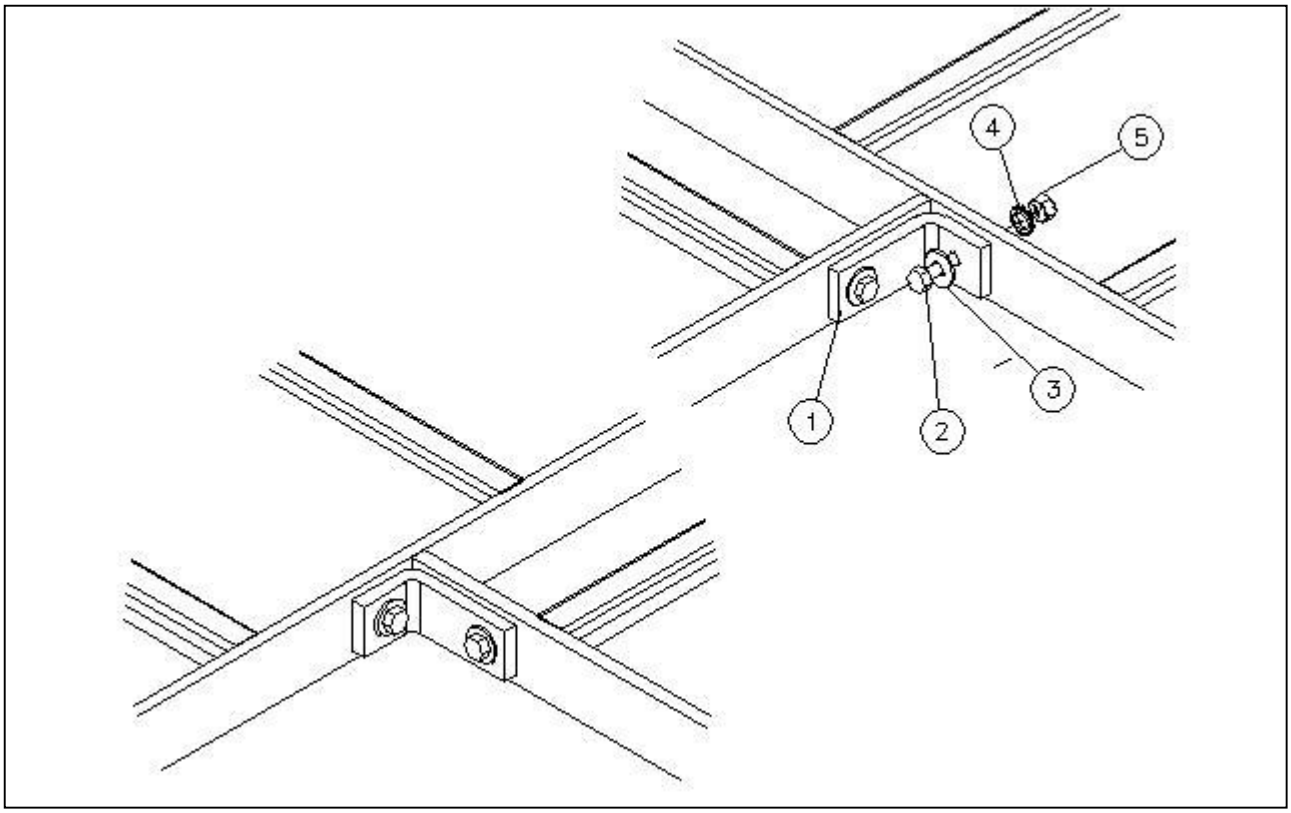

CCE135ZYK [1.50”] / CCE235ZYK [2.00”] CORNER KIT [SEISMIC] CABLE RACK			
ITEM	QTY	PART#	DESCRIPTION
1	2	CCEXXXZY	CORNER BRACKET FOR SEISMIC CABLE RACK
2	4	HH1007	3/8” – 16” HHCS X 1.50” LG.
3	4	FW166	3/8” FLAT WASHER
4	4	LWE156	3/8” EXT. TOOTH LOCKWASHER
5	4	HN146	3/8” – 16” HEX NUT

Specifications subject to change. Please contact CSF Customer Service for more information.
© copyright 2004 Central Steel Fabricators, Inc.
http://www.centralsteelfab.com ◆ 2100 Parkes Drive, Broadview, IL 60155
Phone: 708-652-2037 Fax: 708-652-7010

END GUARD [KIT16] – 7’-0” [6-7-3] 16.00” DP

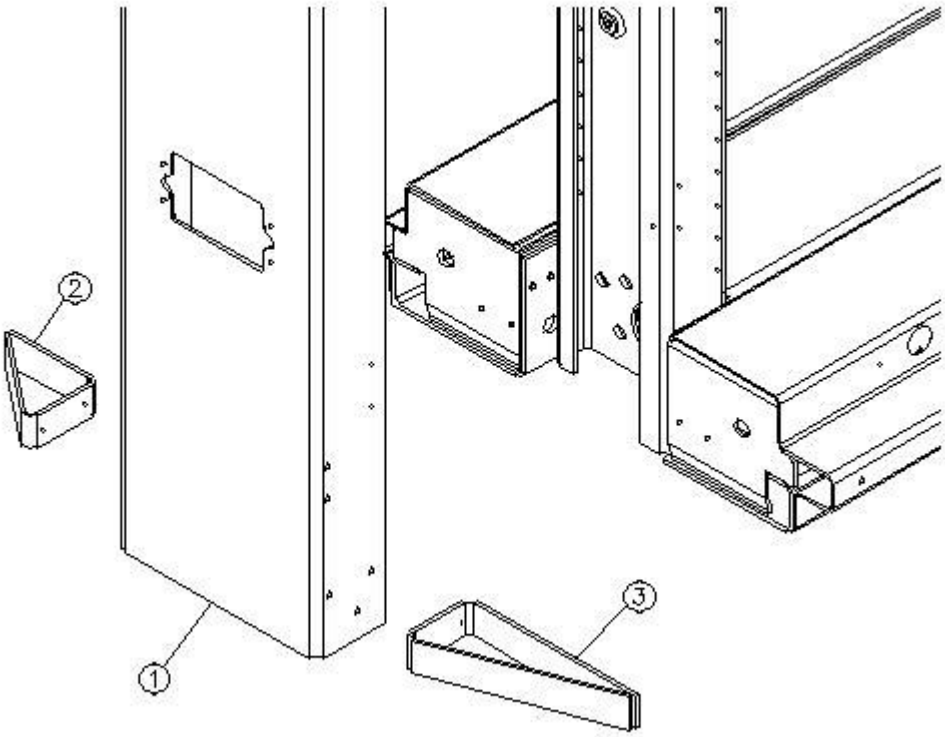

EG25CBK16 – END GUARD KIT16			
ITEM	QTY	PART#	DESCRIPTION
1	1	EG25CB	END GUARD 7’-0” NETWORK BAY
2	1	GRB03CB	GUARD RAIL BUMPER RACK/ EG [3.00”]
3	1	GRB06CB	GUARD RAIL BUMPER RACK/ EG [6.00”]

Specifications subject to change. Please contact CSF Customer Service for more information.
© copyright 2004 Central Steel Fabricators, Inc.
http://www.centralsteelfab.com ◆ 2100 Parkes Drive, Broadview, IL 60155
Phone: 708-652-2037 Fax: 708-652-7010

GROUND JUMPER BRACKET KIT01

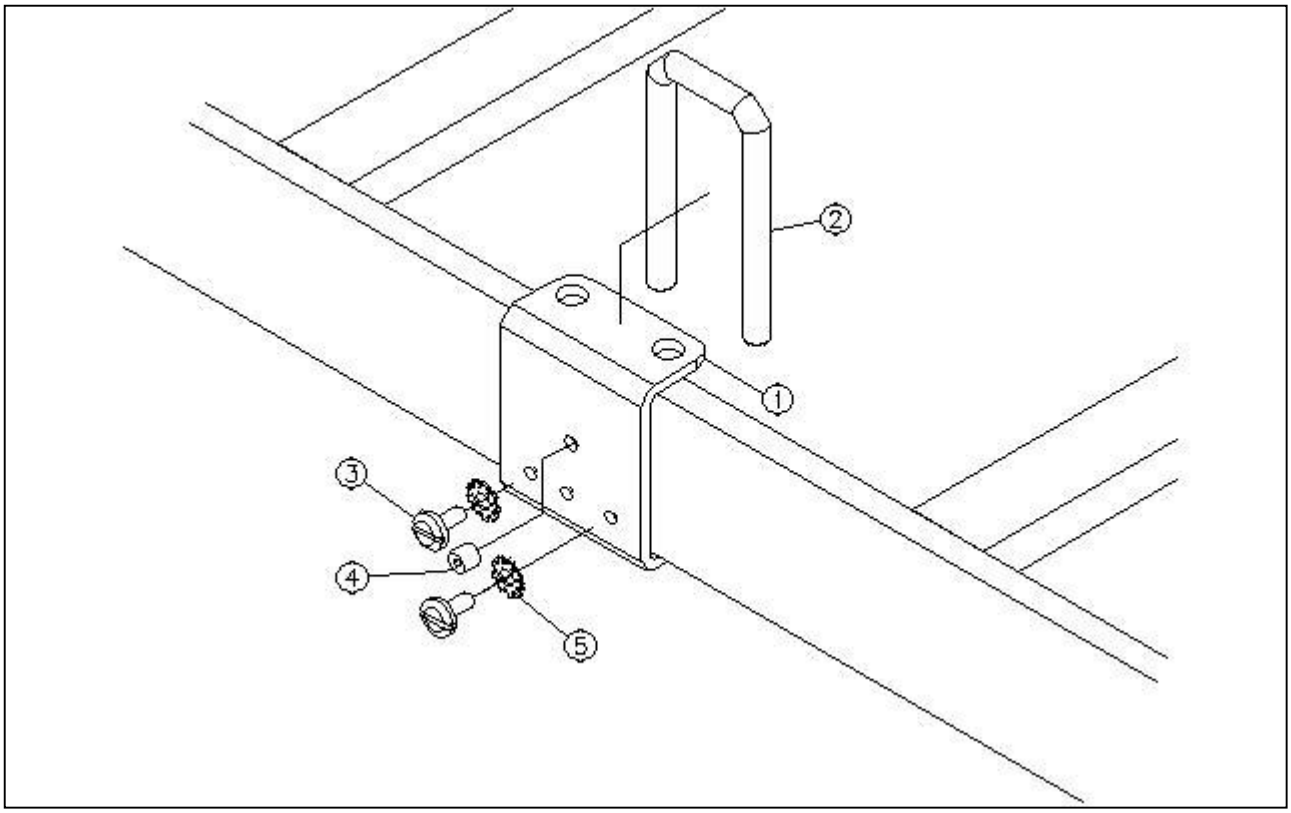

GJB20K01 – GROUND JUMPER BRACKET KIT01			
ITEM	QTY	PART#	DESCRIPTION
1	1	GJB20	GROUND JUMPER BRACKET [2.00”]
2	1	WH00	WIRE HORN FLUSH [2.92”] ZY
3	2	PH0401FST	12-24 X 3/8” PH PHIL CUTTING
4	1	SS0600	1/4-20 X 3/8” SOCKET SET SCREW
5	2	LWE153	#12 EXT. TOOTH LOCKWASHER ZY

Specifications subject to change. Please contact CSF Customer Service for more information.
© copyright 2004 Central Steel Fabricators, Inc.
http://www.centralsteelfab.com ◆ 2100 Parkes Drive, Broadview, IL 60155
Phone: 708-652-2037 Fax: 708-652-7010

CJB6301CCN – Clip "J" Bolt Assembly – 1.50" Cable Rack to Auxiliary Framing Channel [Continuity]

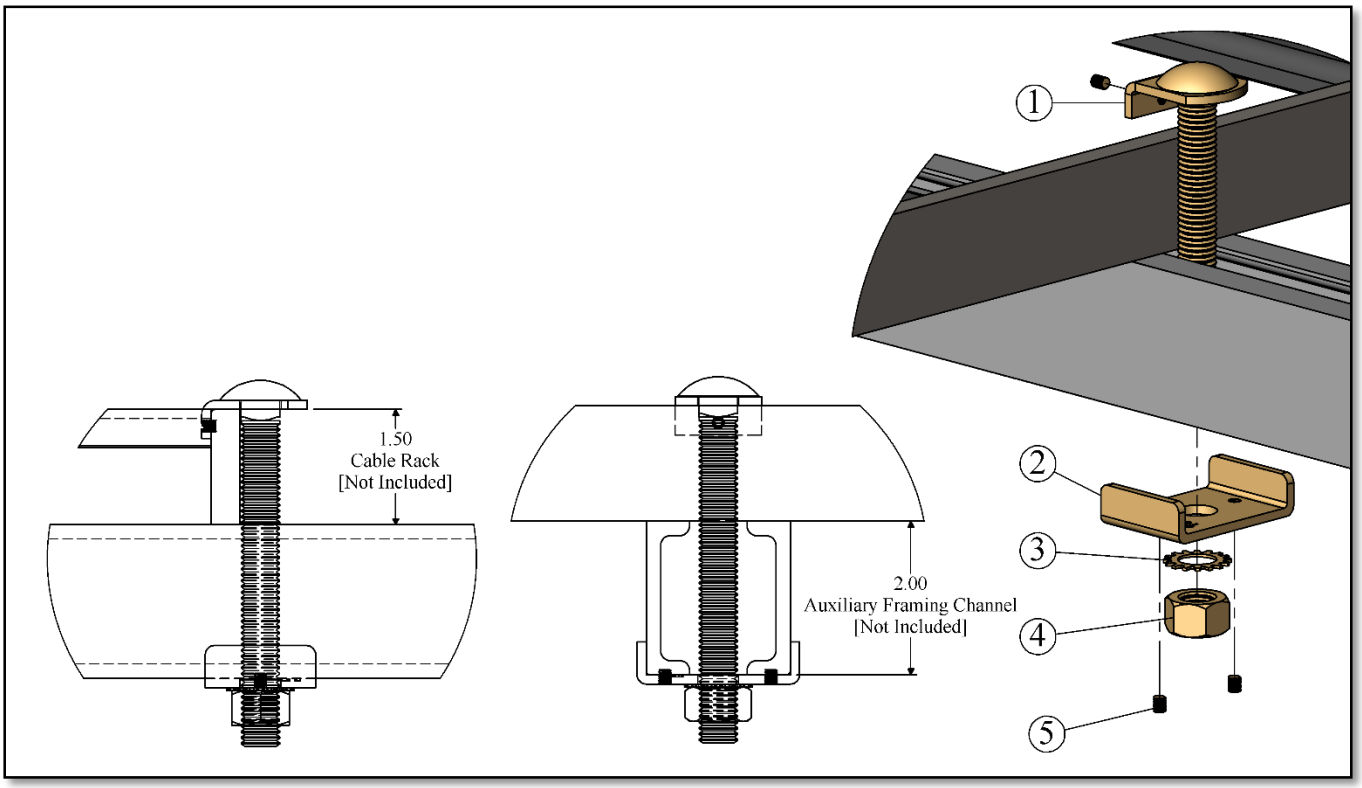

CJB6301CCN – Clip "J" Bolt Assembly – 1.50" Cable Rack to Aux. Framing Channel [Continuity]			
ITEM	QTY	PART#	DESCRIPTION
1	1	CJB4CN	1/2-13 "J" Bolt Clip [Continuity] – ZY
2	1	FC315CN	Framing Clip [Continuity] – ZY
3	1	LWE157	1/2 External Tooth Lock Washer – ZY
4	1	HN147	1/2-13 Hex Nut – ZY
5	3	SS0303	#10-32 X 3/16 Socket Set Screw

RVSD*0517

Specifications subject to change. Please contact CSF Customer Service for more information.

© copyright 2004 Central Steel Fabricators, Inc.
http://www.centralsteelfab.com ◆ 2100 Parkes Drive, Broadview, IL 60155
Phone: 708-652-2037 Fax: 708-652-7010

CJB6302CCN – Clip "J" Bolt Assembly – 2.00" Cable Rack to Auxiliary Framing Channel [Continuity]

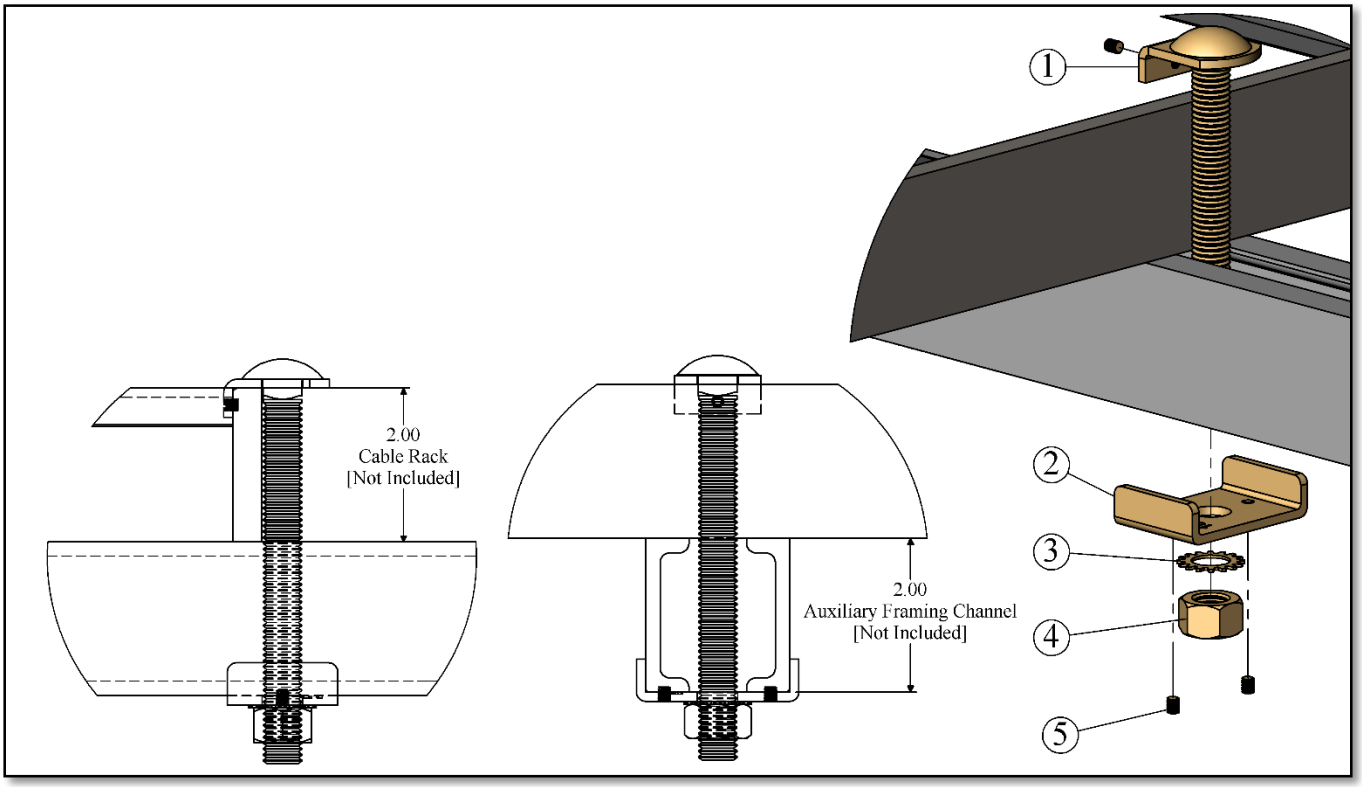

CJB6302CCN – Clip "J" Bolt Assembly – 2.00" Cable Rack to Aux. Framing Channel [Continuity]			
ITEM	QTY	PART#	DESCRIPTION
1	1	CJB5CN	1/2-13 "J" Bolt Clip [Continuity] – ZY
2	1	FC315CN	Framing Clip [Continuity] – ZY
3	1	LWE157	1/2 External Tooth Lock Washer – ZY
4	1	HN147	1/2-13 Hex Nut – ZY
5	3	SS0303	#10-32 X 3/16 Socket Set Screw

RVSD*0517

Specifications subject to change. Please contact CSF Customer Service for more information.

© copyright 2004 Central Steel Fabricators, Inc.
http://www.centralsteelfab.com ◆ 2100 Parkes Drive, Broadview, IL 60155
Phone: 708-652-2037 Fax: 708-652-7010

CABLE SUPPORT TUBE – CSTXXDGK

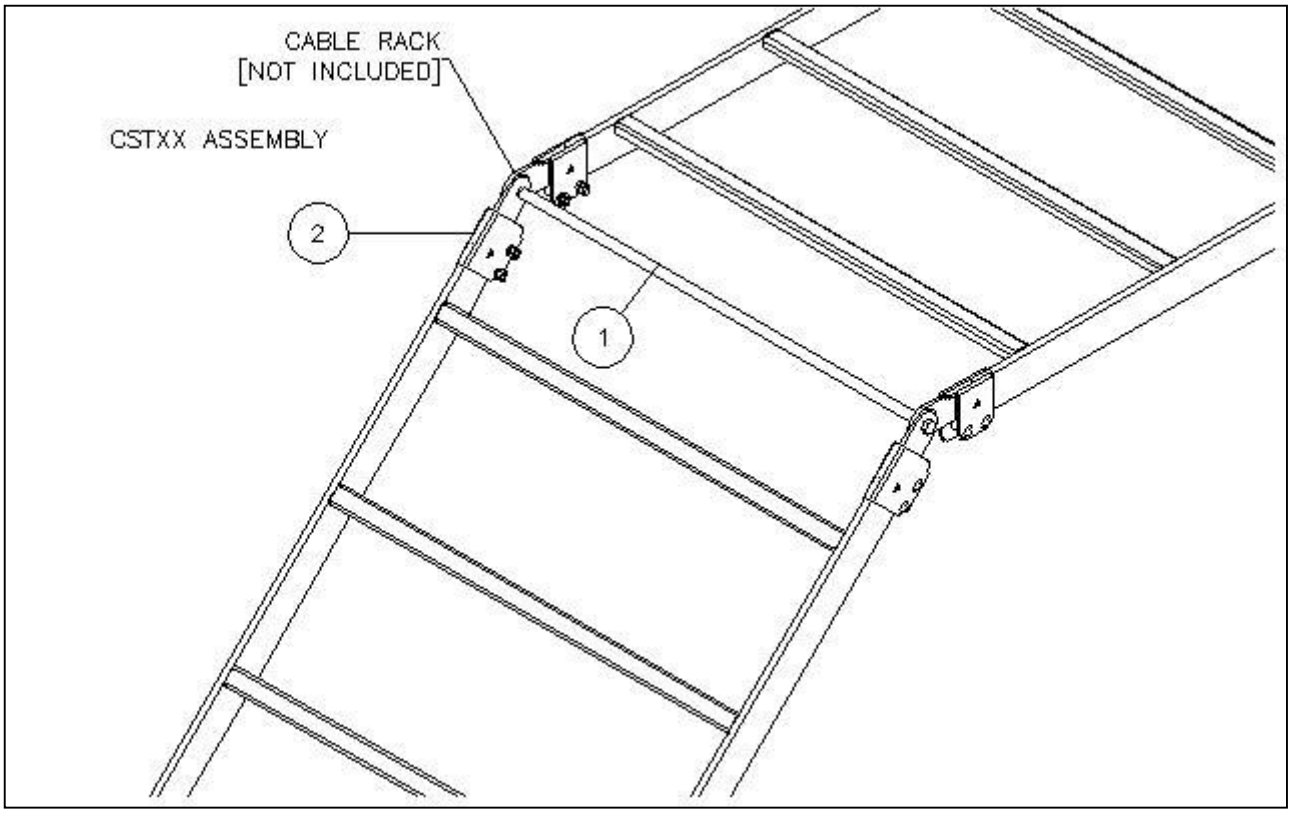

CSTXXDGK			
ITEM#	QTY	CSF#	DESCRIPTION
1	1	CSTXXDG	CABLE SUPPORT TUBE FOR CABLE RACK
2	1	SCA22	STRINGER CLAMP ADJUSTABLE [1 PAIR] 2.00”
AVAILABLE LENGTHS: 5.00”, 12.00”, 15.00”, 18.00”, 20.00”, 24.00”, 25.00”			

NOTES:
- CABLE RACK NOT INCLUDED
- FINISH: DARK GREY

Specifications subject to change. Please contact CSF Customer Service for more information.
© copyright 2004 Central Steel Fabricators, Inc.
http://www.centralsteelfab.com ◆ 2100 Parkes Drive, Broadview, IL 60155
Phone: 708-652-2037 Fax: 708-652-7010

ALB1910XXK – ADJUSTABLE LACING BRACKET 19.00” KIT

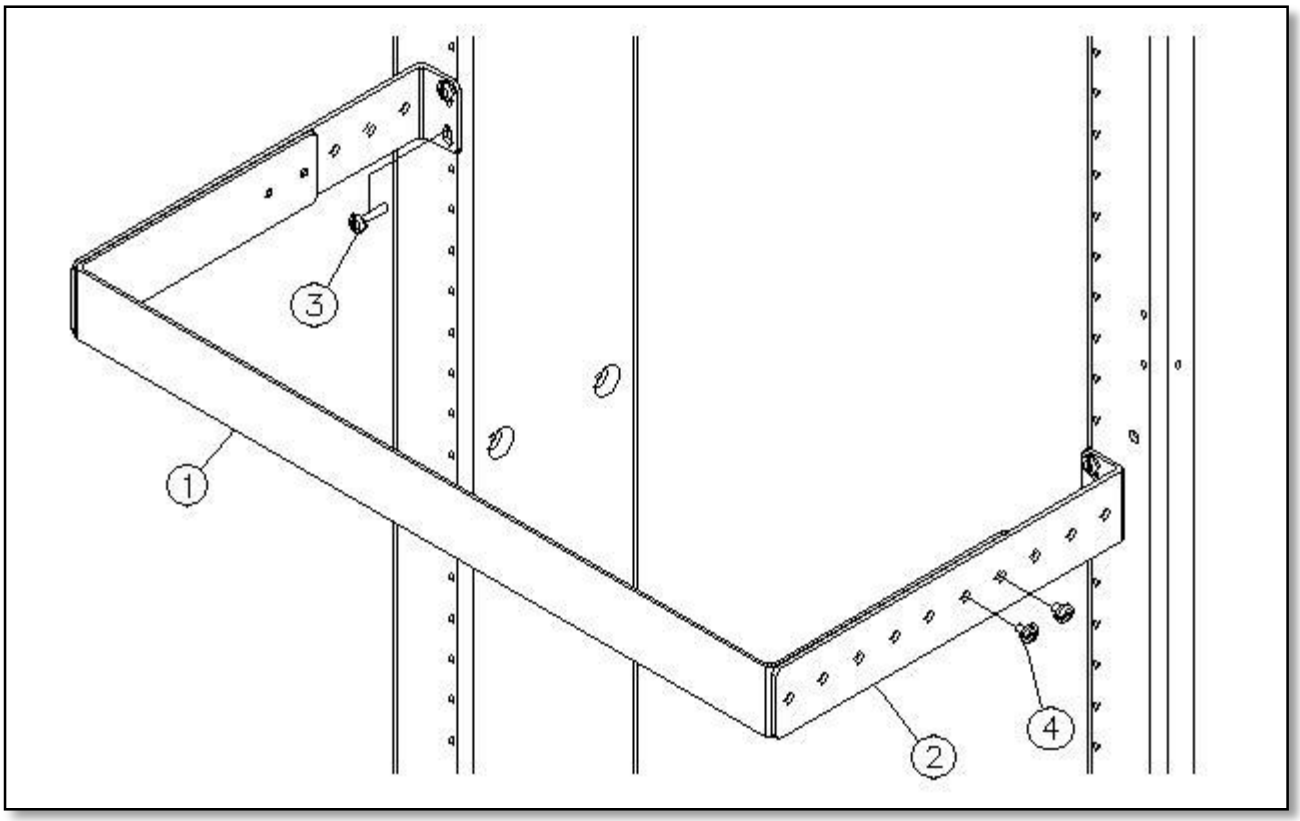

ALB1910XXK			
ITEM	CSF#	QTY	DESCRIPTION
1	ALB1900	1	ALB GUARD 7.00” – 12.00” FOR 19.00” EIA
2	ALB1015	2	ADJUSTABLE BRACKET
3	PH0405FST	4	12-24 X .75” LG. PH PHIL CUTTING ZY
4	PH0400	4	12-24 X .25” LG. PAN HEAD M/S

Specifications subject to change. Please contact CSF Customer Service for more information.
© copyright 2004 Central Steel Fabricators, Inc.
http://www.centralsteelfab.com ◆ 2100 Parkes Drive, Broadview, IL 60155
Phone: 708-652-2037 Fax: 708-652-7010

ALB2310XXK – ADJUSTABLE LACING BRACKET 23.00” KIT

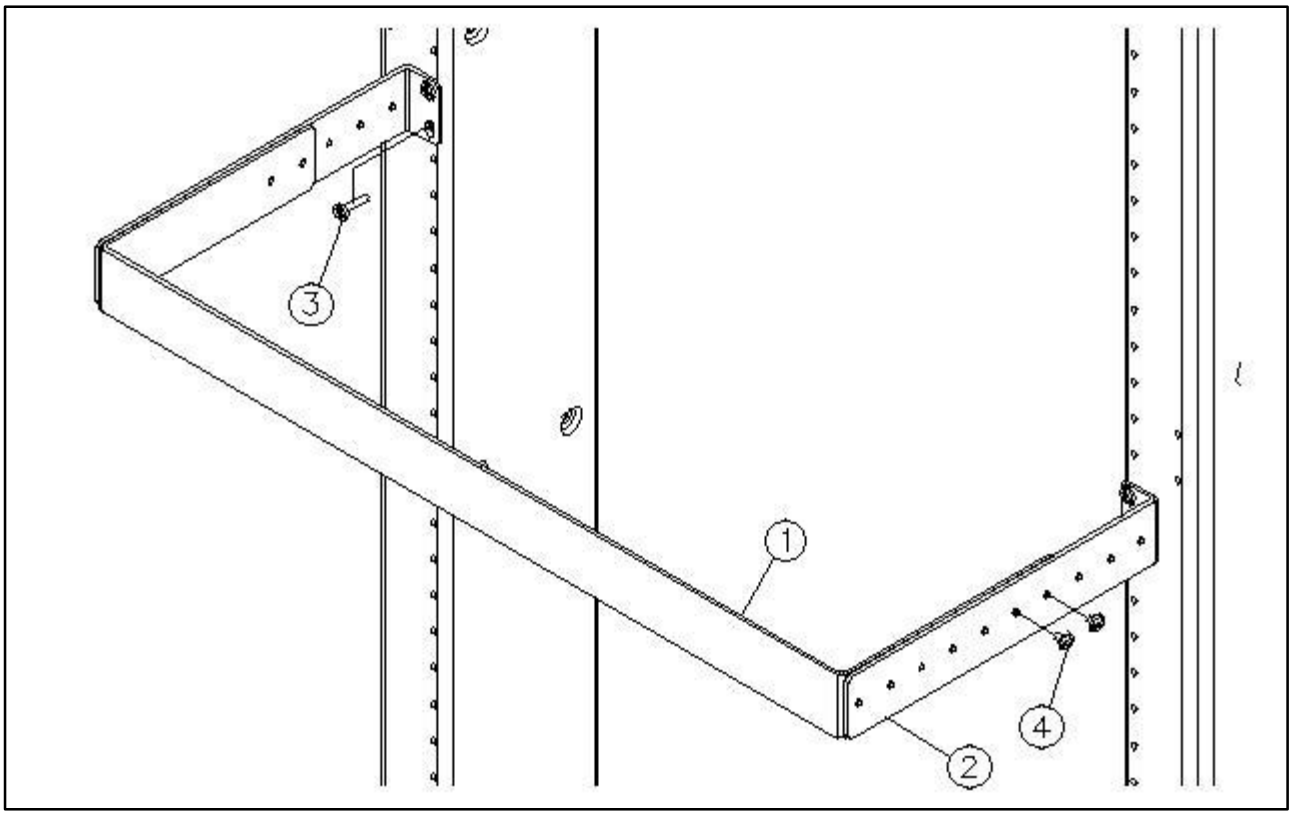

ALB2310XXK			
ITEM	CSF#	QTY	DESCRIPTION
1	ALB2300	1	ALB GUARD 7.00” – 12.00” FOR 23.00” EIA
2	ALB1015	2	ADJUSTABLE BRACKET
3	PH0405FST	4	12-24 X .75” LG. PH PHIL CUTTING ZY
4	PH0400	4	12-24 X .25” LG. PAN HEAD M/S

Specifications subject to change. Please contact CSF Customer Service for more information.
© copyright 2004 Central Steel Fabricators, Inc.
http://www.centralsteelfab.com ◆ 2100 Parkes Drive, Broadview, IL 60155
Phone: 708-652-2037 Fax: 708-652-7010

MH19FS - 3/8" ES – FLOOR SUPPORT RACK – MOUNTING HARDWARE

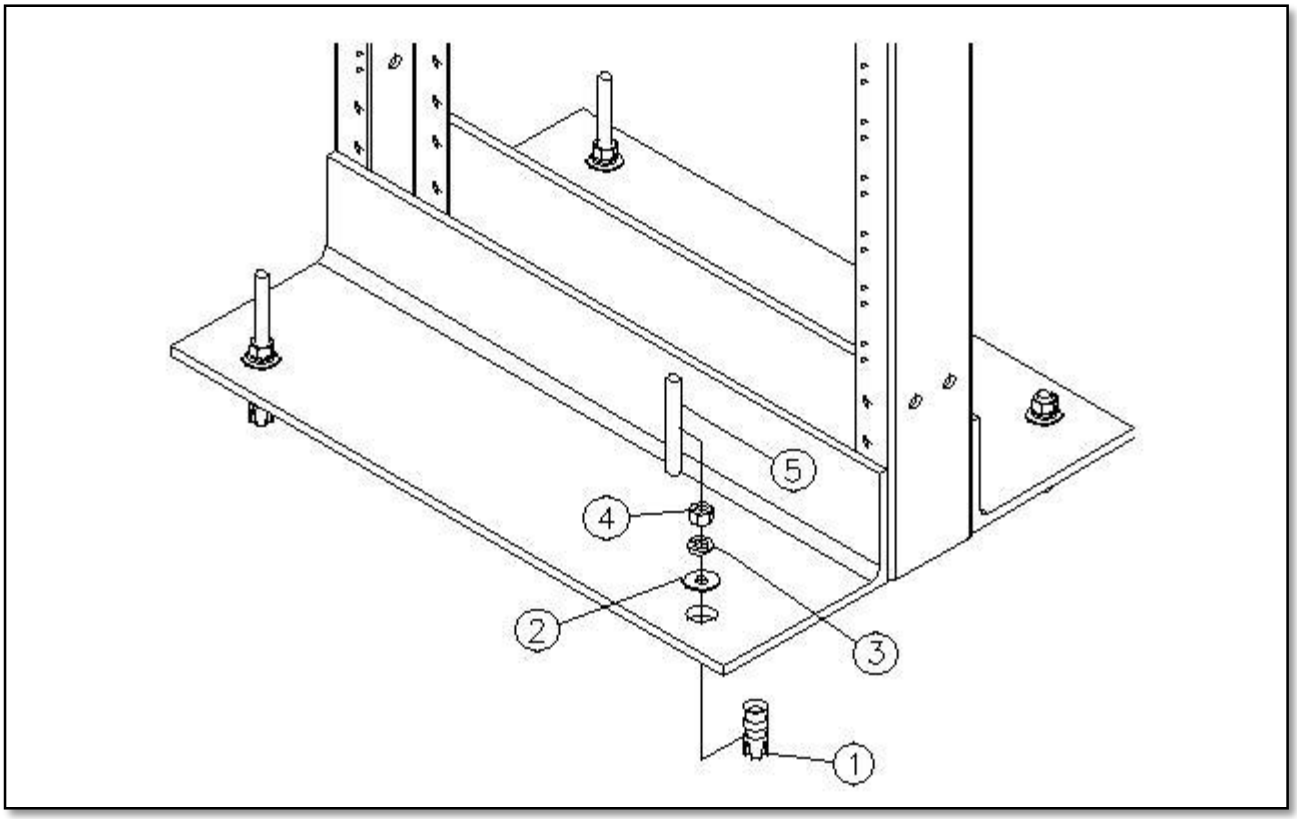

MH19FS – 3/8" ES – FLOOR SUPPORT RACK – MOUNTING HARDWARE			
ITEM	CSF#	QTY	DESCRIPTION
1	ES1805	4	3/8" EXPANSION SHIELD – 1.50" LG.
2	FW166	4	3/8" FLAT WASHER, 1.00" O.D. – ZY
3	LW156	4	3/8" SPRING LOCKWASHER – ZY
4	HN146	4	3/8-16 HEX NUT – ZY
5	TR03	4	3/8-16 THREADED ROD X 3.00" LG. - ZY
6	FW168	4	5/8" FLAT WASHER, 1.75" O.D. – ZY [NOT SHOWN]

Specifications subject to change. Please contact CSF Customer Service for more information.
© copyright 2004 Central Steel Fabricators, Inc.
http://www.centralsteelfab.com ◆ 2100 Parkes Drive, Broadview, IL 60155
Phone: 708-652-2037 Fax: 708-652-7010

MH20FS - 5/8" ES – FLOOR SUPPORT RACK – MOUNTING HARDWARE

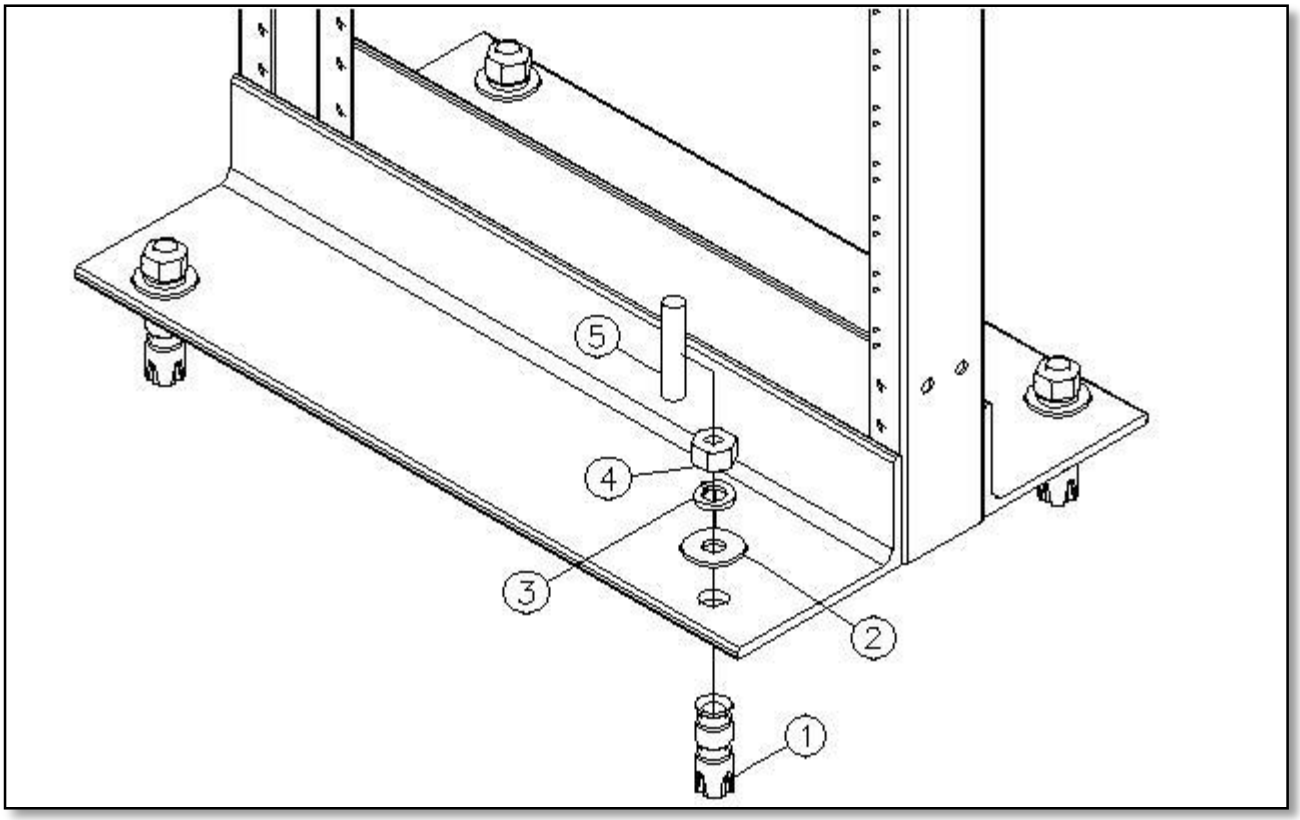

MH20FS – 5/8" ES – FLOOR SUPPORT RACK – MOUNTING HARDWARE			
ITEM	CSF#	QTY	DESCRIPTION
1	ES1811	4	5/8" EXPANSION SHIELD – 2.62" LG.
2	FW168	4	5/8" FLAT WASHER, 1.75" O.D. – ZY
3	LW158	4	5/8" SPRING LOCKWASHER – ZY
4	HN148	4	5/8-11 HEX NUT – ZY
5	TR49	4	5/8-11 THREADED ROD X 3.00" LG. – ZY

Specifications subject to change. Please contact CSF Customer Service for more information.
© copyright 2004 Central Steel Fabricators, Inc.
http://www.centralsteelfab.com ◆ 2100 Parkes Drive, Broadview, IL 60155
Phone: 708-652-2037 Fax: 708-652-7010

Contents

- RNX0425CBK50 7’-0” X 19.00” Sigma Bay
- RNE5025CBK52 7’-0” X 19.00” Seismic Network Bay
- RNE5825CBK53 7’-0” X 23.00” Seismic Network Bay
- RNE5825CBK55 7’-0” X 23.00” Seismic Network Bay
- RNE5825CBK59 7’-0” X 23.00” Seismic Network Bay
- RNE5825CBK65 7’-0” X 23.00” Seismic Network Bay
- RNE5125CBK67 7’-0” X 23.00” Seismic Network Bay
- RNE5125CBK68 7’-0” X 23.00” Seismic Network Bay
- RNE5525CBK69 7’-0” X 23.00” Seismic Network Bay
- FPSX25CBK23 7’-0” X W “ X 23.00” Base Filler With Filler Panel
- FPS125CBK23 7’-0” X 2.50” X 23.00” Filler Panel Assembly
- FPS225CBK23 7’-0” X 5.00” X 2300” Filler Panel Assembly
- FPA125CBK20 7’-0” X 2.50” X 20.00” Base Filler W/ Filler Panel
- FPA125CBK30 7’-0” X 2.50” X 30.00” Base Filler W/ Filler Panel
- FPA225CBK23 7’-0” X 5.00” X 23.00” Filler Panel + BFN
- FLA125DGK30 7’-0” X 2.50” X 30.00” Base Filler W/ filler Panel
- FPSX25CBK31 7’-0” X W “ X 23.00” Base Filler W/ Filler Panel
- FPSX25CBK36 7’-0” X W “ Base Filler With Filler Panel
- FPC125CBK16 7’-0” X 2.50” X 16.00” DP. RN-CB Bay Filler/ Network
- FPC225CBK16 7’-0” X 5.00” X 16.00” DP. RN-CB Bay Filler/ Network
- FPC225CBK28 7’-0” X 5.00” X 28.00” DP. RN-CB Bay Filler/ Network
- RNE6525ADK87 7’-0” X 23.00” Seismic Network Bay
- RNE5525CBK81 7’-0” X 23.00” Seismic Network Bay [Assembly]
- FPA225CBK15 Filler Panel + Base Filler 5.00” x 7’-0” x 15.00 RN-CB
- RN5525CBK62 7’-” X 23.00” Non – Seismic Network Bay
- RNE5525CBK62 7’-0” X 23.00” Seismic Network Bay
- RUE5125DGK67 Seismic Unequal Flange Guard Box Wide Flange [5+20]
- RUE5125DGK68 Seismic UFER GBWF [5+5+20] 23.00” x 7’-0” [1.75” SPC]
- FPX025CBK Filler Panel + Sigma Base Filler 2.00” x 7’-0” x 16.00” RNX-CB

Specifications subject to change. Please contact CSF Customer Service for more information.
© copyright 2004 Central Steel Fabricators, Inc.
http://www.centralsteelfab.com ◆ 2100 Parkes Drive, Broadview, IL 60155
Phone: 708-652-2037 Fax: 708-652-7010

RNX0425CBK50 – 7’-0” X 19” Sigma Bay

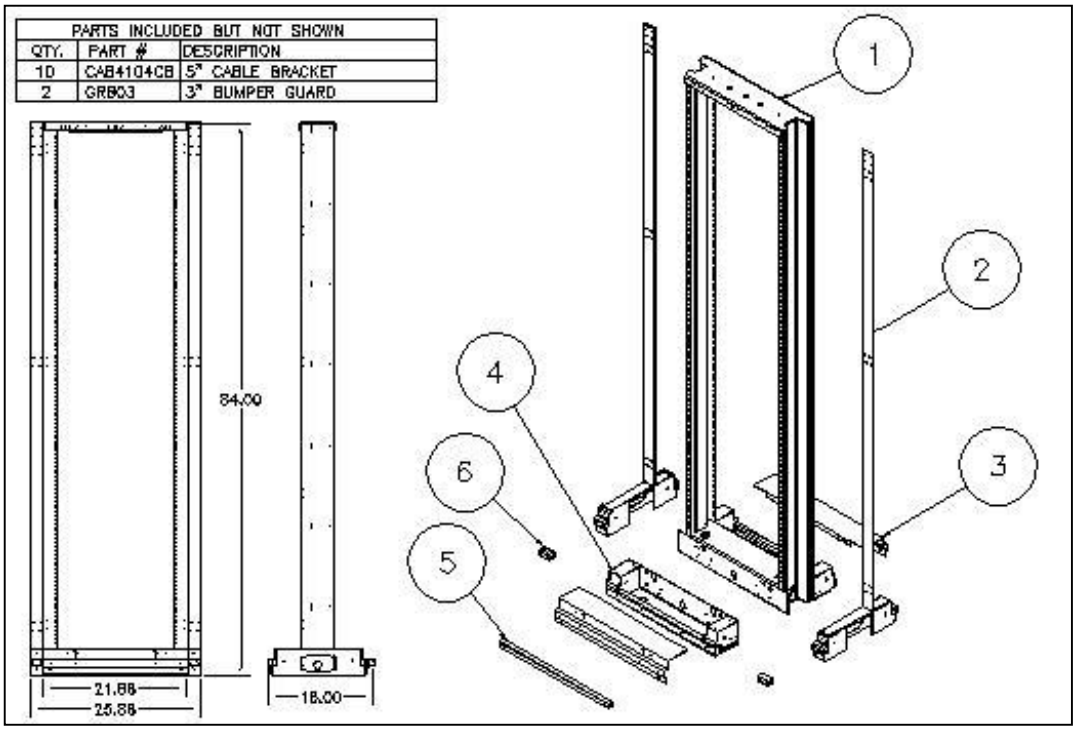

ITEM	QTY	CSF #	DESCRIPTION
1	1	RNX0425CBK	7’-0” SIGMA BAY
2	2	FPX025CBK	2" X 16" SIGMA SPACER KIT
3	2	R403	5" BAY COVER
4	1	RNR519	5" REMOVABLE GUARD BOX
5	1	GREX01	1" X 19" GUARD RAIL EXTENSION
6	2	BFEX0201	1" X 2" BASE FILLER EXTENSION

NOTES:
- OTHER SIZES AND FINISHES AVAILABLE UPON REQUEST
- KIT INCLUDES BAY CONNECTING HARDWARE
- ORDER FLOOR ANCHORING AND TOP SUPPORT HARDWARE SEPARATELY

Specifications subject to change. Please contact CSF Customer Service for more information.
© copyright 2004 Central Steel Fabricators, Inc.
http://www.centralsteelfab.com ◆ 2100 Parkes Drive, Broadview, IL 60155
Phone: 708-652-2037 Fax: 708-652-7010

RNE5025CBK52– 7'-0" X 19" Seismic Network Bay

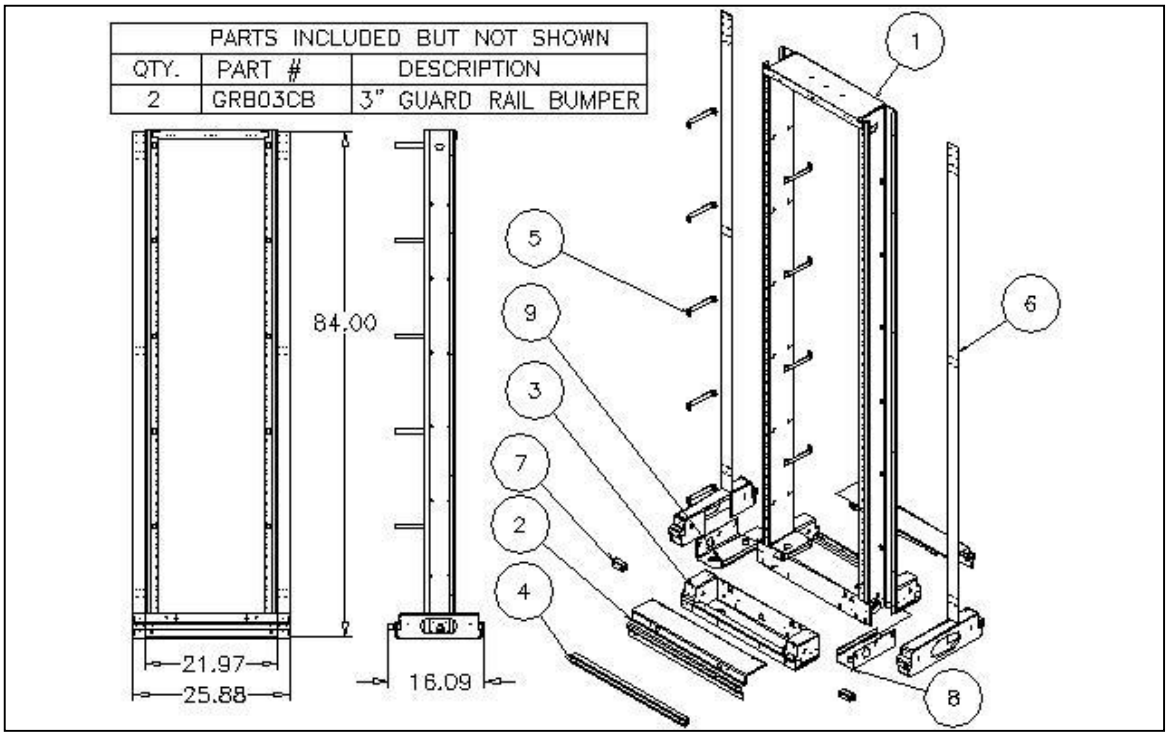

ITEM	QTY	CSF #	DESCRIPTION
1	1	RNE5025CB	7'-0" SEISMIC NETWORK BAY 19" W/ 1.75" MP
2	2	R403CB	5" BAY COVER
3	1	RNR519CB	5" REMOVABLE BAY COVER
4	1	GREX01CB	1" X 19" GUARD RAIL EXTENSION
5	10	CAB4104CB	5" CABLE BRACKET KITS
6	2	FPX025CBK	2" X 16" SIGMA SPACER KIT
7	2	BFEX0201CB	1" X 2" BASE FILLER EXTENSION
8	1	R208L	NETWORK BAY SEISMIC PLATE L.H.
9	1	R208R	NETWORK BAY SEISMIC PLATE R.H.

NOTES:
- OTHER SIZES AND FINISHES AVAILABLE UPON REQUEST
- KIT INCLUDES BAY CONNECTING HARDWARE
- ORDER FLOOR ANCHORING AND TOP SUPPORT HARDWARE SEPARATELY

Specifications subject to change. Please contact CSF Customer Service for more information.

© copyright 2004 Central Steel Fabricators, Inc.
http://www.centralsteelfab.com ◆ 2100 Parkes Drive, Broadview, IL 60155
Phone: 708-652-2037 Fax: 708-652-7010

RNE5825CBK53 – 7'-0" X 23" Seismic Network Bay

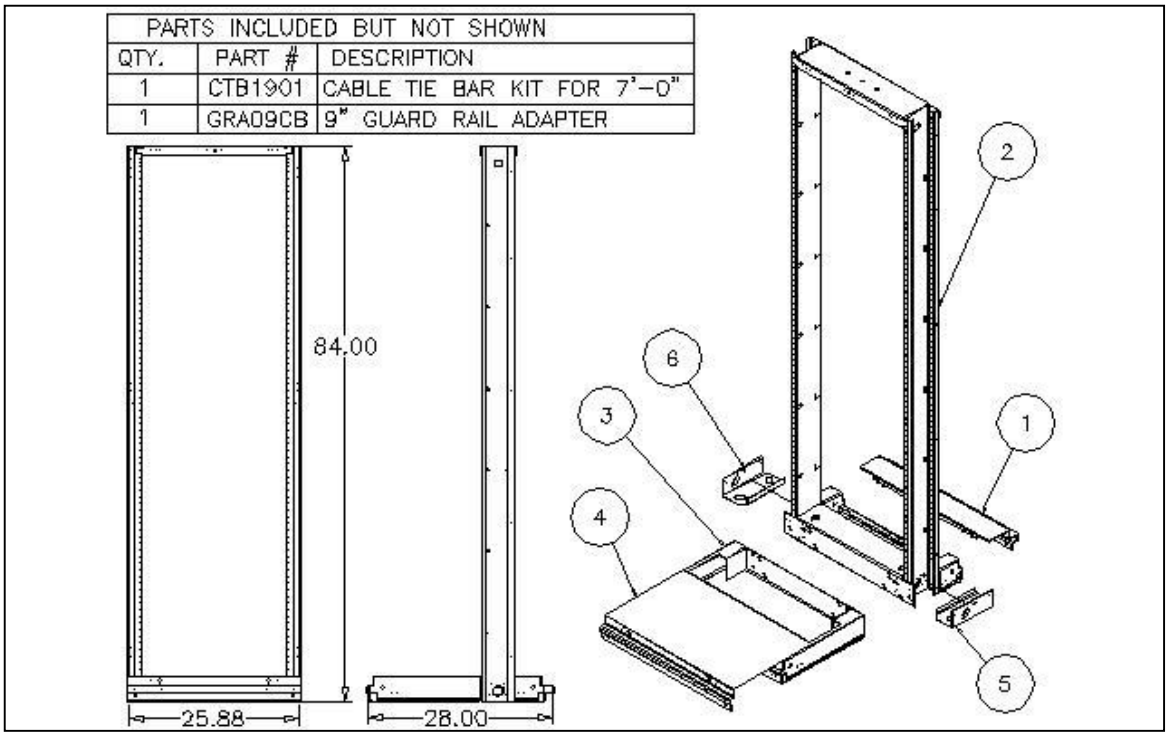

ITEM	QTY	CSF #	DESCRIPTION
1	1	R402	23" NETWORK BAY COVER W/2" NOSE 6" DEEP
2	1	RNE5825	7'-0" SEISMIC NETWORK RACK
3	1	RNR1723	17" REMOVABLE GUARD BOX
4	1	RNC217	23" NETWORK BAY COVER 17" DEEP
5	1	R208L	NETWORK BAY SEISMIC PLATE L.H.
6	1	R208R	NETWORK BAY SEISMIC PLATE R.H.

NOTES:
- KIT INCLUDES BAY CONNECTING HARDWARE
- ORDER FLOOR ANCHORING AND TOP SUPPORT HARDWARE SEPARATELY
- OTHER SIZES AND FINISHES AVAILABLE UPON REQUEST

Specifications subject to change. Please contact CSF Customer Service for more information.
© copyright 2004 Central Steel Fabricators, Inc.
http://www.centralsteelfab.com ◆ 2100 Parkes Drive, Broadview, IL 60155
Phone: 708-652-2037 Fax: 708-652-7010

RNE5825CBK55 – 7'-0" X 23" Seismic Network Bay

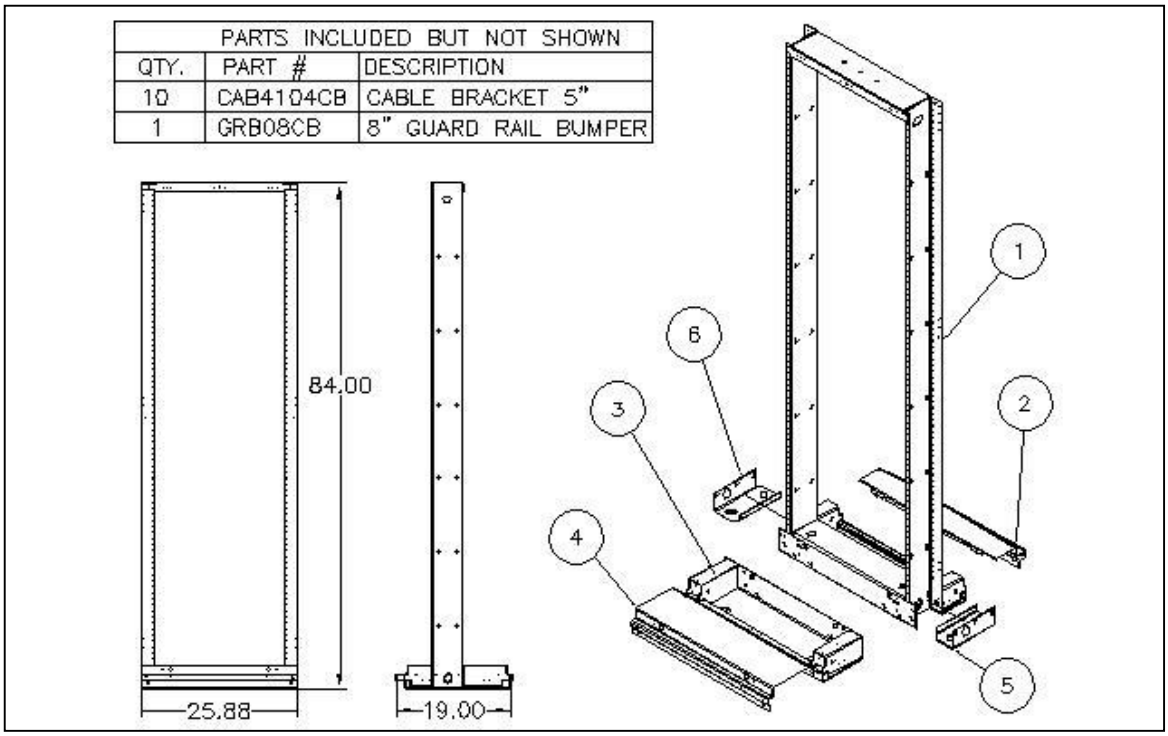

ITEM	QTY	CSF #	DESCRIPTION
1	1	RNE5525	NETWORK BAY 23" X 7'-0", 1" SPC GBWF
2	1	R402	23" NETWORK BAY COVER W/2" NOSE 6" DEEP
3	1	RNR823	8" REMOVABLE GUARD BOX
4	1	RNC208	23" NETWORK BAY COVER 8" DEEP
5	1	R208L	NETWORK BAY SEISMIC PLATE L.H.
6	1	R208R	NETWORK BAY SEISMIC PLATE R.H.

NOTES:

- KIT INCLUDES BAY CONNECTING HARDWARE
- ORDER FLOOR ANCHORING AND TOP SUPPORT HARDWARE SEPARATELY
- OTHER SIZES AND FINISHES AVAILABLE UPON REQUEST

Specifications subject to change. Please contact CSF Customer Service for more information.

© copyright 2004 Central Steel Fabricators, Inc.
http://www.centralsteelfab.com ◆ 2100 Parkes Drive, Broadview, IL 60155
Phone: 708-652-2037 Fax: 708-652-7010

RNE5825CBK59 – 7'-0" X 23" Seismic Network Bay

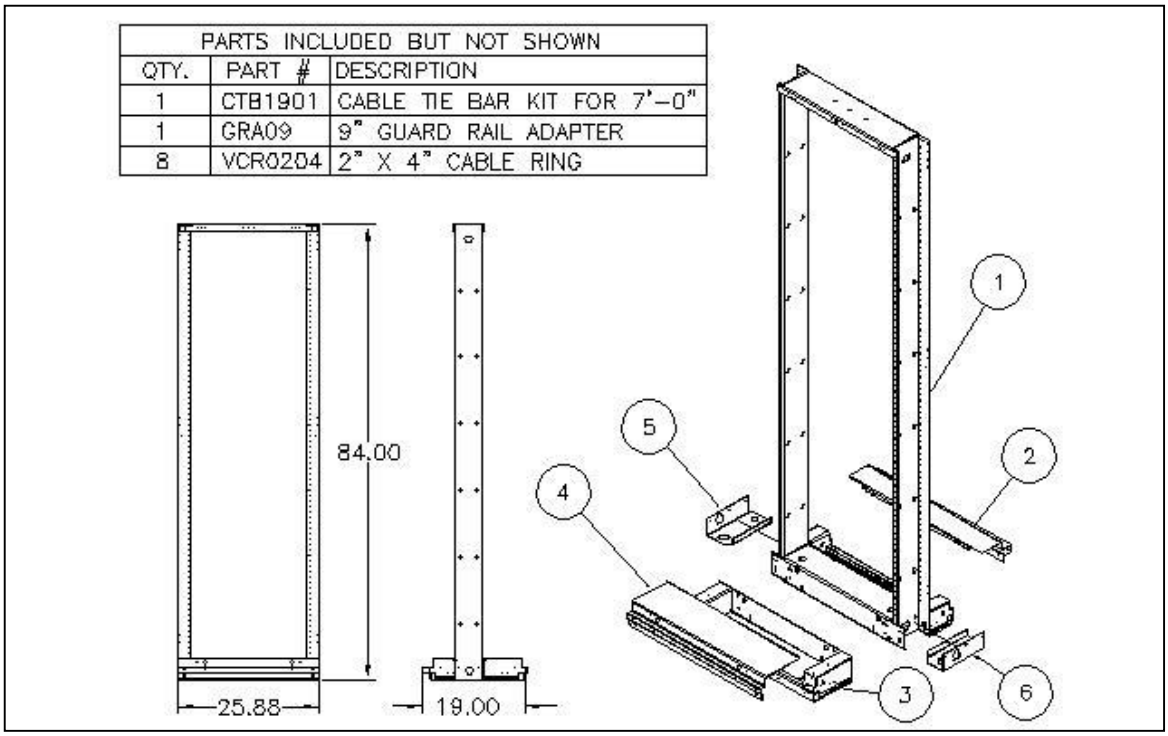

ITEM	QTY	CSF #	DESCRIPTION
1	1	RNE5525	NETWORK BAY 23" X 7'-0", 1" SPC GBWF
2	1	R402	23" BAY COVER 6" DEEP
3	1	RNR823	8" REMOVABLE GUARD BOX 23" WIDE
4	1	RNC208	23" BAY COVER 8" DEEP
5	1	R208R	NETWORK BAY SEISMIC PLATE R.H.
6	1	R208L	NETWORK BAY SEISMIC PLATE L.H.

NOTES:
- KIT INCLUDES BAY CONNECTING HARDWARE
- ORDER FLOOR ANCHORING AND TOP SUPPORT HARDWARE SEPARATELY
- OTHER SIZES AND FINISHES AVAILABLE UPON REQUEST

Specifications subject to change. Please contact CSF Customer Service for more information.
© copyright 2004 Central Steel Fabricators, Inc.
http://www.centralsteelfab.com ◆ 2100 Parkes Drive, Broadview, IL 60155
Phone: 708-652-2037 Fax: 708-652-7010

RNE5825CBK65 – 7'-0" X 23" Seismic Network Bay

PARTS INCLUDED BUT NOT SHOWN		
QTY.	PART #	DESCRIPTION
1	CTB1901	CABLE TIE BAR KIT FOR 7'-0"
6	CAB4103CB	4" CABLE BRACKET KIT
1	RA709CBK	RK ADP KIT 23UNV-19EIA 9RU CB

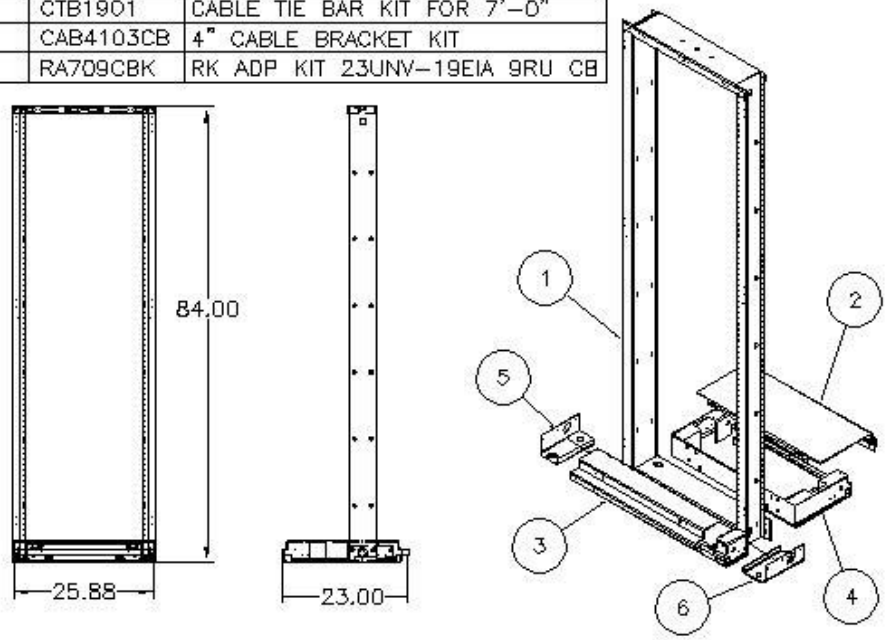

ITEM	QTY	CSF #	DESCRIPTION
1	1	RNE5525	NETWORK BAY 23" X 7'-0", 1" SPC GBWF
2	1	RNC212	23" BAY COVER 12" DEEP
3	1	R402	23" BAY COVER 6" DEEP
4	1	RNR1223	12" REMOVABLE GUARD BOX
5	1	R208L	NETWORK BAY SEISMIC PLATE L.H.
6	1	R208R	NETWORK BAY SEISMIC PLATE R.H.

NOTES:
- KIT INCLUDES BAY CONNECTING HARDWARE
- ORDER FLOOR ANCHORING AND TOP SUPPORT HARDWARE SEPARATELY
- OTHER SIZES AND FINISHES AVAILABLE UPON REQUEST

Specifications subject to change. Please contact CSF Customer Service for more information.
© copyright 2004 Central Steel Fabricators, Inc.
http://www.centralsteelfab.com ◆ 2100 Parkes Drive, Broadview, IL 60155
Phone: 708-652-2037 Fax: 708-652-7010

RNE5125CBK67– 7′-0″ X 23″ Seismic Network Bay

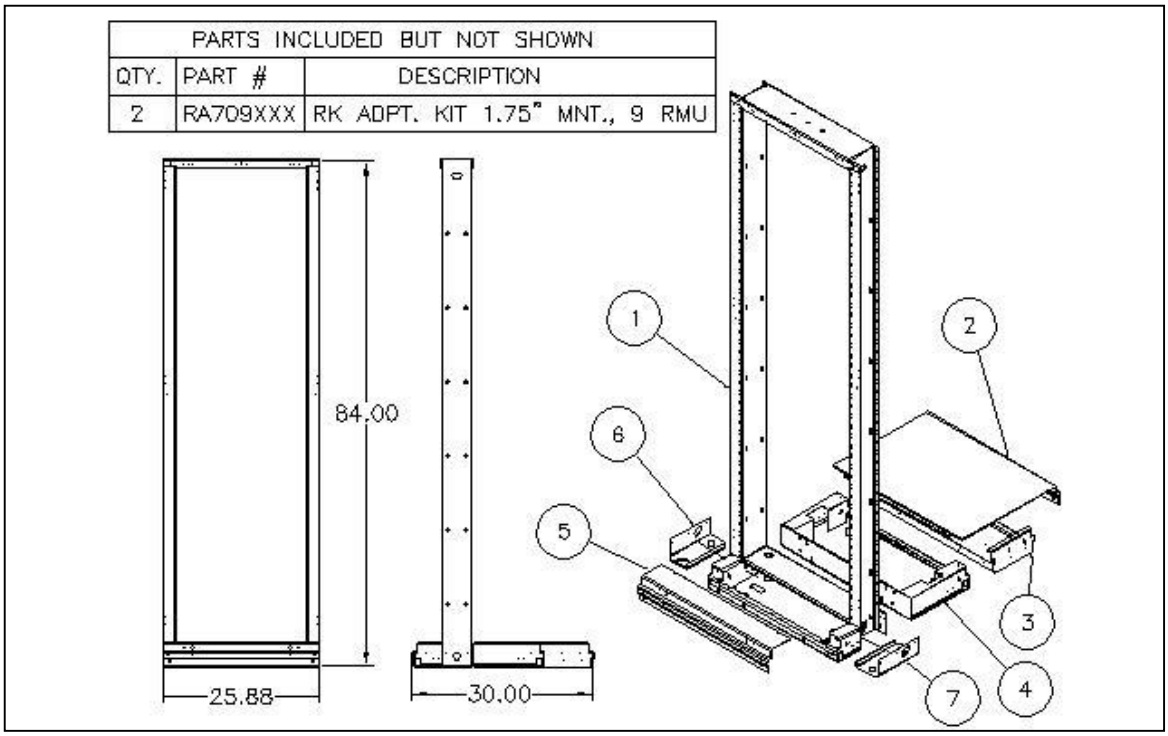

ITEM	QTY	CSF #	DESCRIPTION
1	1	RNE5125	NETWORK BAY 23″ X 7′-0″, 1.75″ SPC GBWF
2	1	RNC220	23″ BAY COVER 20″ DEEP
3	1	RNB0823	23″ GUARD BOX EXTENDER 8″ DEEP
4	1	RNR1223	12″ REMOVABLE GUARD BOX 23″ WIDE
5	1	R400	23″ BAY COVER 5″ DEEP
6	1	R208L	NETWORK BAY SEISMIC PLATE L.H.
7	1	R208R	NETWORK BAY SEISMIC PLATE R.H.

NOTES:

- KIT INCLUDES BAY CONNECTING HARDWARE
- ORDER FLOOR ANCHORING AND TOP SUPPORT HARDWARE SEPARATELY
- OTHER SIZES AND FINISHES AVAILABLE UPON REQUEST

Specifications subject to change. Please contact CSF Customer Service for more information.

© copyright 2004 Central Steel Fabricators, Inc.
http://www.centralsteelfab.com ◆ 2100 Parkes Drive, Broadview, IL 60155
Phone: 708-652-2037 Fax: 708-652-7010

RNE5125CBK68– 7'-0" X 23" Seismic Network Bay

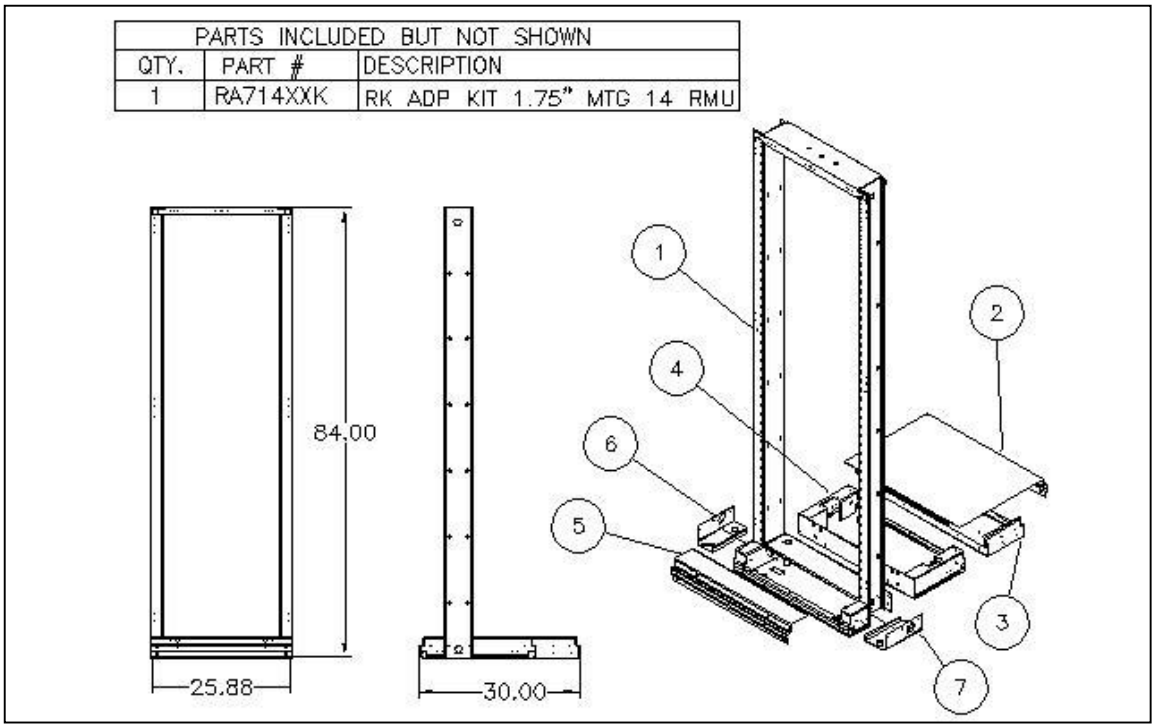

ITEM	QTY	CSF #	DESCRIPTION
1	1	RNE5125	NETWORK BAY 23" X 7'-0", 1.75" SPC GBWF
2	1	RNC220	23" BAY COVER 20" DEEP
3	1	RNB0823	23" GUARD BOX EXTENDER 8" DEEP
4	1	RNR1223	12" REMOVABLE GUARD BOX 23" WIDE
5	1	R400	23" BAY COVER 5" DEEP
6	1	R208L	NETWORK BAY SEISMIC PLATE L.H.
7	1	R208R	NETWORK BAY SEISMIC PLATE R.H.

NOTES:
- KIT INCLUDES BAY CONNECTING HARDWARE
- ORDER FLOOR ANCHORING AND TOP SUPPORT HARDWARE SEPARATELY
- OTHER SIZES AND FINISHES AVAILABLE UPON REQUEST

Specifications subject to change. Please contact CSF Customer Service for more information.
© copyright 2004 Central Steel Fabricators, Inc.
http://www.centralsteelfab.com ◆ 2100 Parkes Drive, Broadview, IL 60155
Phone: 708-652-2037 Fax: 708-652-7010

RNE5525CBK69– 7'-0" X 23" Seismic Network Bay

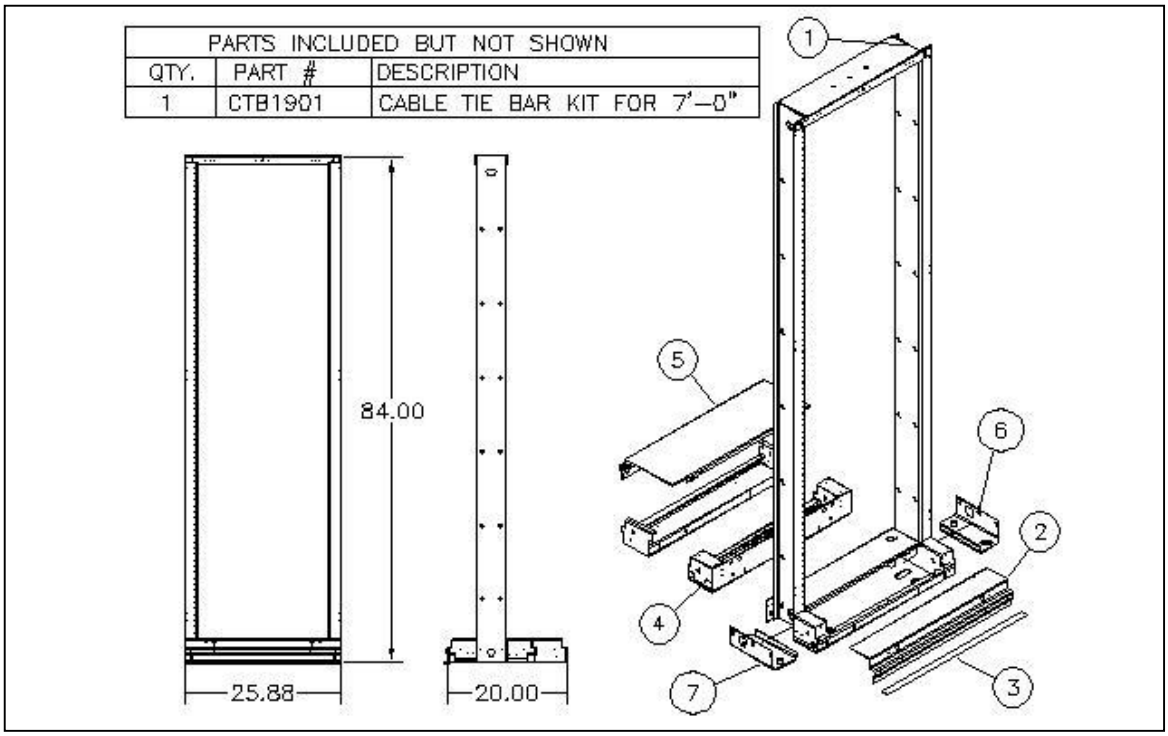

ITEM	QTY	CSF #	DESCRIPTION
1	1	RNE5525	NETWORK BAY 23" X 7'-0", 1.00" SPC GBWF
2	1	R400	23.00" BAY COVER 5.00" DEEP
3	1	FBM26CB	FLOOR BASE MOLDING 26.00" Lg.
4	1	RNR1023CB	NWB REAR GUARD BOX 10.00" X 23.00" W/ COVER
5	1	RNC210CB	NWB COVER 10" DP, 4" HIGH
6	1	R208R	NETWORK BAY SEISMIC PLATE R.H.
7	1	R208L	NETWORK BAY SEISMIC PLATE L.H.

NOTES:
- KIT INCLUDES BAY CONNECTING HARDWARE
- ORDER FLOOR ANCHORING AND TOP SUPPORT HARDWARE SEPARATELY
- OTHER SIZES AND FINISHES AVAILABLE UPON REQUEST

Specifications subject to change. Please contact CSF Customer Service for more information.

© copyright 2004 Central Steel Fabricators, Inc.
http://www.centralsteelfab.com ◆ 2100 Parkes Drive, Broadview, IL 60155
Phone: 708-652-2037 Fax: 708-652-7010

FPAX25CBK23- 7'-0" X W IN X 23.00" BASE FILLER WITH FILLER PNL

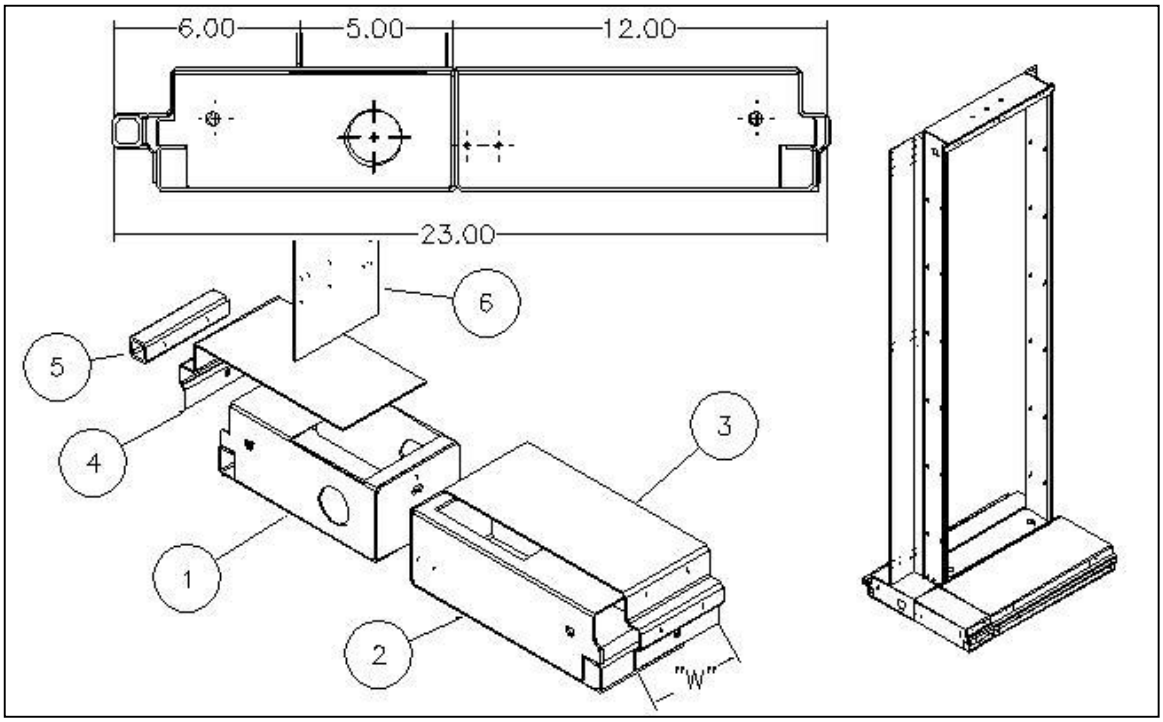

FPA125CBK23 2.50" WIDE CONFIGURATION (6+5+12)				
ITEM	QTY	CSF #	"W"	DESCRIPTION
1	1	BFN25BCB	2.50"	BAY FILLER BASE NTWK 2.5" X 10"
2	1	RNBF02512CB	2.50"	RMVBL FILLER BASE NTWK 2.5" X 12"
3	1	RNC02512CB	2.50"	BASE FILLER COVER NTWK 2.5" X 12"
4	1	BFN25CCB	2.50"	BASE FILLER COVER NTWK 2.5" X 10"
5	1	BFE201CB	2.50"	BASE FILLER EXTENDER 1.0" X 2.5"
6	1	FP125CB	2.50"	FILLER PANEL NTWK 2.5" X 7.0'
FPA225CBK23 5.00" WIDE CONFIGURATION (6+5+12)				
1	1	BFN50BCB	5.00"	BAY FILLER BASE NTWK 5.0" X 10"
2	1	RNBF05012CB	5.00"	RMVBL FILLER BASE NTWK 5.0" X 12"
3	1	RNC05012CB	5.00"	BASE FILLER COVER NTWK 5.0" X 12"
4	1	BFN50CCB	5.00"	BASE FILLER COVER NTWK 5.0" X 10.0"
5	1	BFE501CB	5.00"	BASE FILLER EXTENDER 1.0" X 5.0"
6	1	FP225CB	5.00"	FILLER PANEL NTWK 5.0" X 7.0'

NOTES:
- KIT INCLUDES BAY CONNECTING HARDWARE
- OTHER SIZES AND FINISHES AVAILABLE UPON REQUEST

Specifications subject to change. Please contact CSF Customer Service for more information.
© copyright 2004 Central Steel Fabricators, Inc.
http://www.centralsteelfab.com ◆ 2100 Parkes Drive, Broadview, IL 60155
Phone: 708-652-2037 Fax: 708-652-7010

FPS125CBK23 – FILLER PANEL ASSEMBLY 2.50” X 7’-0” X 23.00”

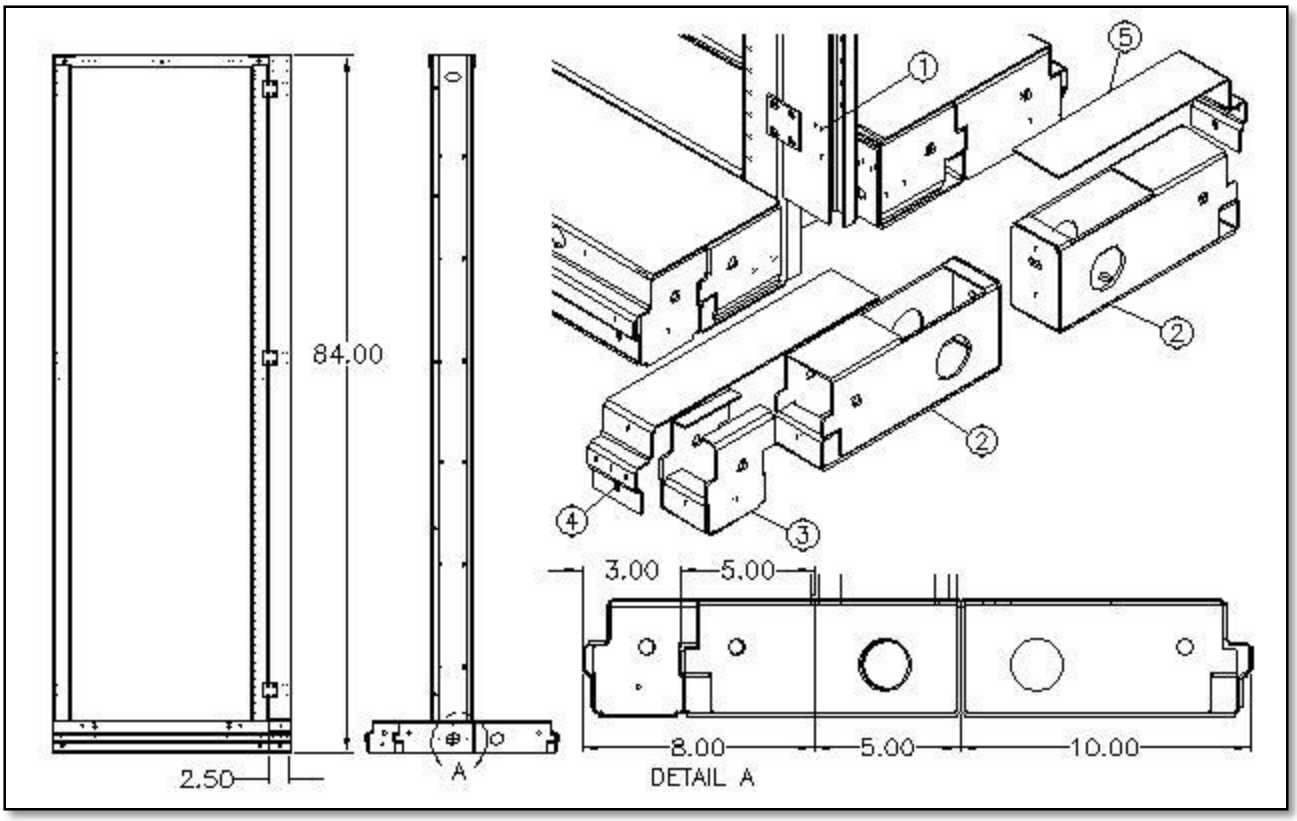

FPS125CBK23 – FILLER PANEL ASSEMBLY 2.50” X 7’-0” X 23.00”			
ITEM	QTY	CSF #	DESCRIPTION
1	1	FP125CB	FILLER PANEL 2.50” X 79.88” RN-CB
2	2	BFN25B	NETWORK BAY BASE FILLER 2.50” CB
3	1	RNB325	NETWORK BFN25B EXTENDER 2.50” X 3.00” CB
4	1	RNC02513	NETWORK BASE FILLER COVER 2.50” X 13.00” DP.
5	1	BFN25C	NETWORK BAY BASE FILLER COVER 2.50” CB
6	1	BEF - HDWR	BASE EXT. + FILLER HARDWARE KIT [NOT SHOWN]
7	1	BFN - HDWR	HARDWARE FOR BFN250/500 [NOT SHOWN]
8	1	FPA KIT25	FILLER PANEL HARDWARE KIT 7’-0” [NOT SHOWN]
9	4	PH0401FST	12-24 X 3/8” PH PHIL CUTTING [NOT SHOWN]

NOTES:
- KIT INCLUDES BAY CONNECTING HARDWARE
- OTHER SIZES AND FINISHES AVAILABLE UPON REQUEST

Specifications subject to change. Please contact CSF Customer Service for more information.

© copyright 2004 Central Steel Fabricators, Inc.
http://www.centralsteelfab.com ◆ 2100 Parkes Drive, Broadview, IL 60155
Phone: 708-652-2037 Fax: 708-652-7010

FPS225CBK23 – FILLER PANEL ASSEMBLY 5.00” X 7’-0” X 23.00”

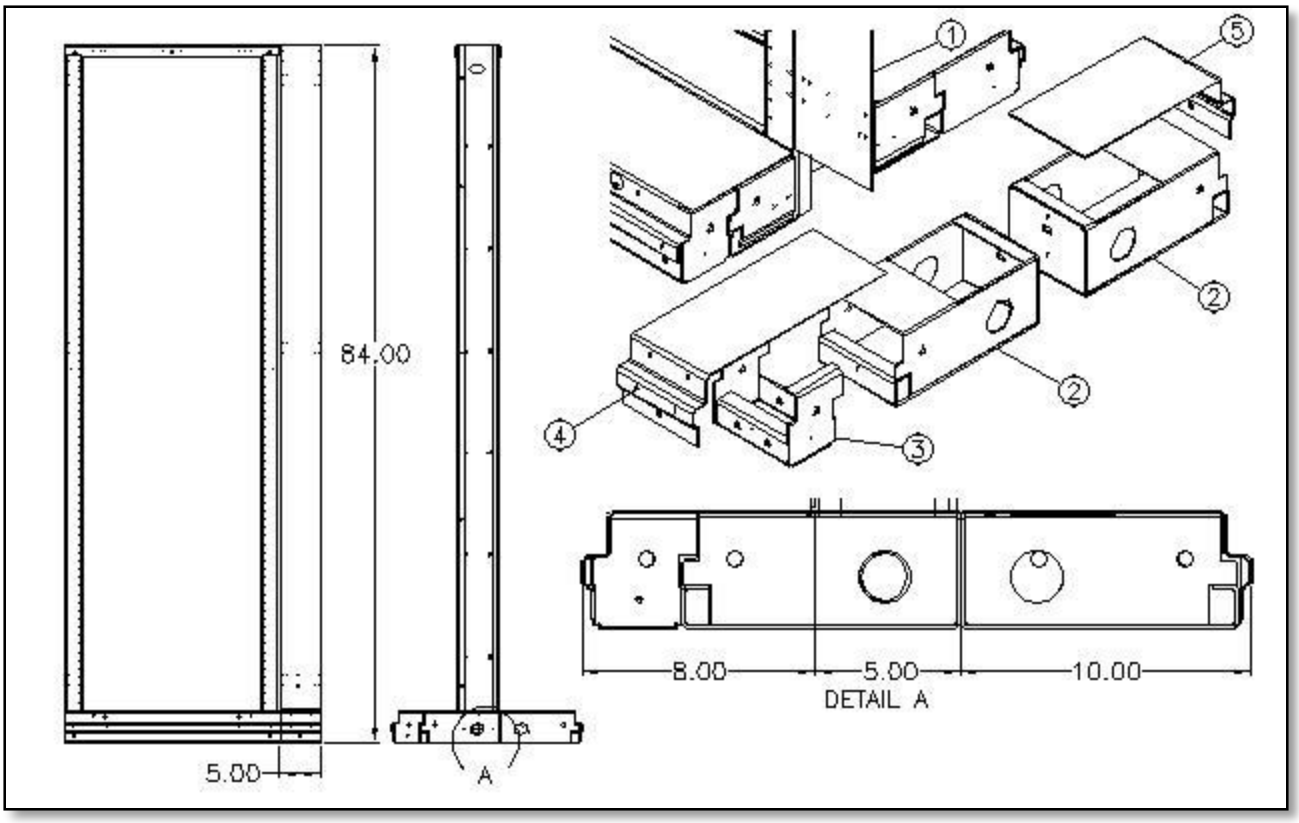

FPS225CBK23 – FILLER PANEL ASSEMBLY 5.00” X 7’-0” X 23.00” RN-CB			
ITEM	QTY	CSF #	DESCRIPTION
1	1	FP225CB	FILLER PANEL 5.00” X 79.88” RN-CB
2	2	BFN50B	NETWORK BAY BASE FILLER 5.00” CB
3	1	RNB305CB	NETWORK BASE EXT. BFN50B 3.00” X 5.00” CB
4	1	RNC05013CB	NETWORK BASE FILLER COVER 5.00” X 13.00” DP. CB
5	1	BFN50C	NETWORK BAY BASE FILLER COVER 5.00” CB
6	1	BEF - HDWR	BASE EXT. + FILLER HARDWARE KIT [NOT SHOWN]
7	1	BFN - HDWR	HARDWARE FOR BFN250/500 [NOT SHOWN]
8	1	FPA KIT25	FILLER PANEL HARDWARE KIT 7’-0” [NOT SHOWN]
9	4	PH0401FST	12-24 X 3/8” PH PHIL CUTTING [NOT SHOWN]

NOTES:
- KIT INCLUDES BAY CONNECTING HARDWARE
- OTHER SIZES AND FINISHES AVAILABLE UPON REQUEST

Specifications subject to change. Please contact CSF Customer Service for more information.

© copyright 2004 Central Steel Fabricators, Inc.
http://www.centralsteelfab.com ◆ 2100 Parkes Drive, Broadview, IL 60155
Phone: 708-652-2037 Fax: 708-652-7010

FPA125CBK20 – 7’-0” X 2.50” X 20” BASE FILLER WITH FILLER PANEL

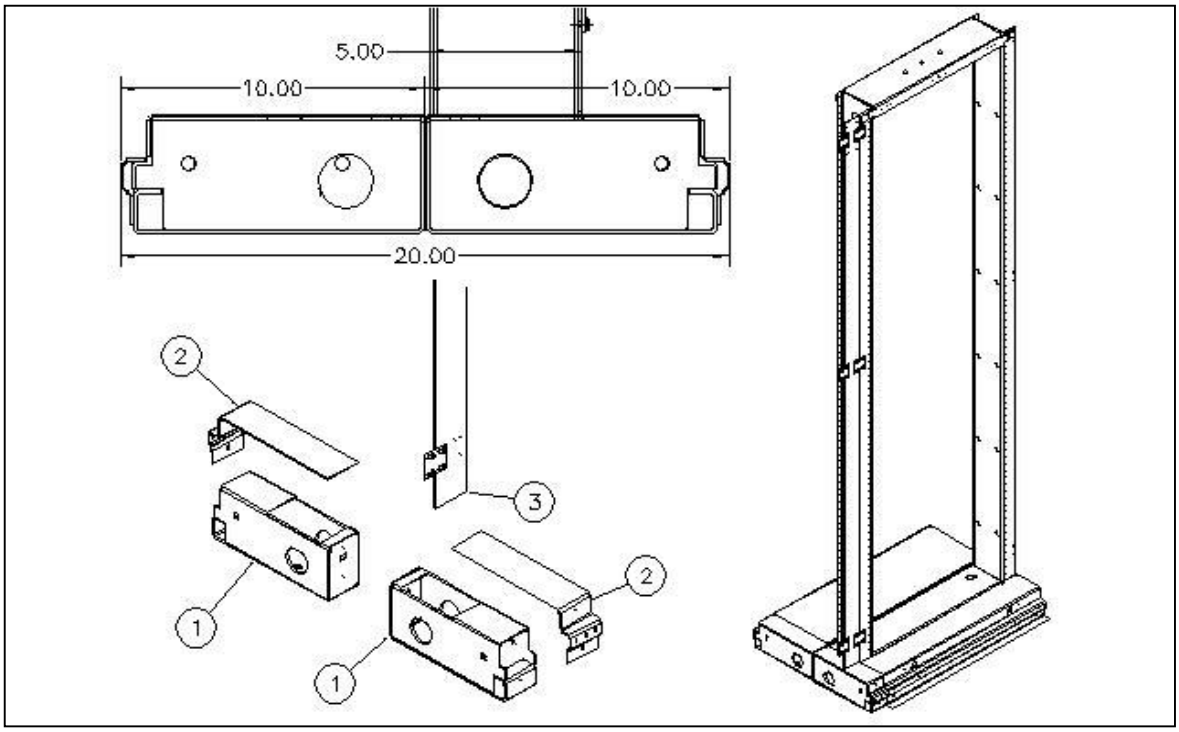

FPA125CBK20 2.50” WIDE CONFIGURATION (5+5+10)				
ITEM	QTY	CSF #	“W”	DESCRIPTION
1	2	BFN25B	2.50”	BAY FILLER BASE NTWK 2.50” X 5.00”
2	2	BFN252C	2.50”	BAY FILLER COVER NTWK 2.50” X 5.00”
3	1	FP125	2.50”	FILLER PANEL 2.50” X 7’-0”

NOTES:
- KIT INCLUDES BAY CONNECTING HARDWARE
- OTHER SIZES AND FINISHES AVAILABLE UPON REQUEST

Specifications subject to change. Please contact CSF Customer Service for more information.
© copyright 2004 Central Steel Fabricators, Inc.
http://www.centralsteelfab.com ◆ 2100 Parkes Drive, Broadview, IL 60155
Phone: 708-652-2037 Fax: 708-652-7010

FPA125CBK30 – 7'-0" X 2.50" X 30" BASE FILLER WITH FILLER PANEL

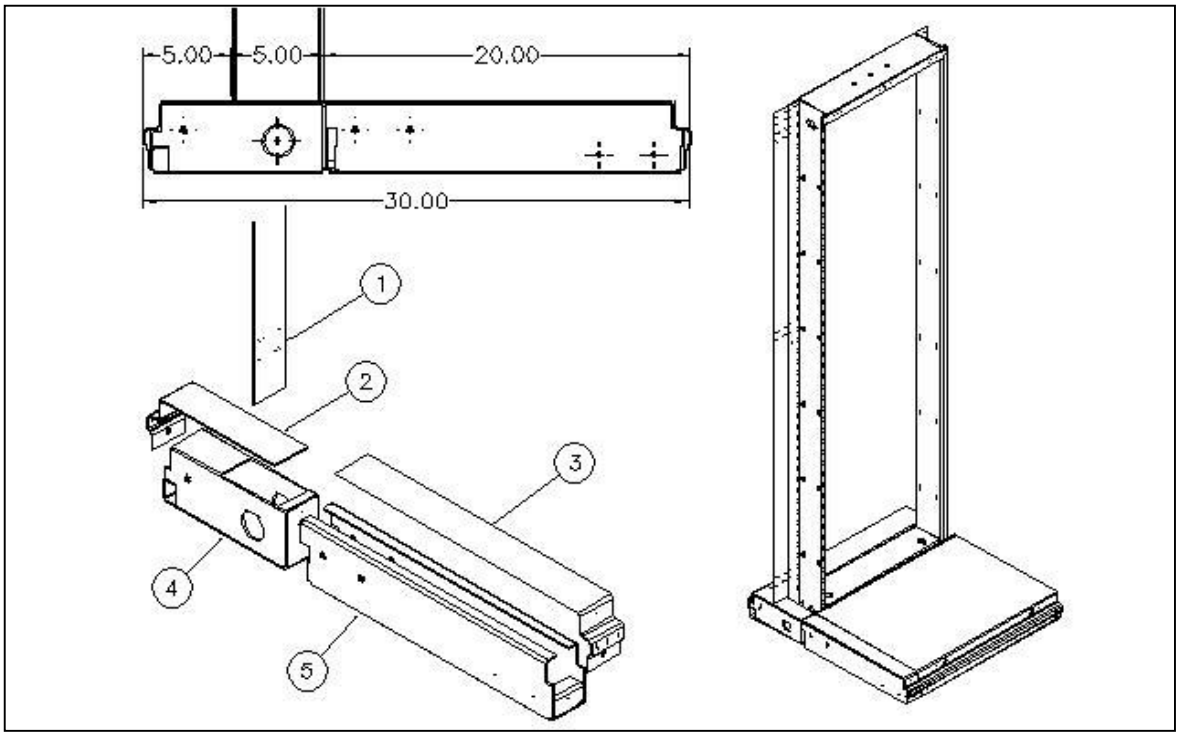

FPA125CBK30 2.50" WIDE CONFIGURATION (5+5+20)				
ITEM	QTY	CSF #	"W"	DESCRIPTION
1	1	FP125CB	2.50"	FILLER PANEL NTWK 2.50" X 84.00"
2	1	BFN25C	2.50"	BAY FILLER COVER NTWK 2.5" X 10"
3	1	RNC02520CB	2.50"	N/B BASE FILLER COVER 2.5" X 20"
4	1	BFN25B	2.50"	BAY FILLER BASE NTWK 2.5" X 10"
5	1	RNB02520CB	2.50"	N/B BASE FILLER 2.5" X 20"

NOTES:
- KIT INCLUDES BAY CONNECTING HARDWARE
- OTHER SIZES AND FINISHES AVAILABLE UPON REQUEST

Specifications subject to change. Please contact CSF Customer Service for more information.

© copyright 2004 Central Steel Fabricators, Inc.
http://www.centralsteelfab.com ◆ 2100 Parkes Drive, Broadview, IL 60155
Phone: 708-652-2037 Fax: 708-652-7010

FPA225CBK23 – FILLER PANEL + BFN 5.00” X 7’-0” X 23.00”

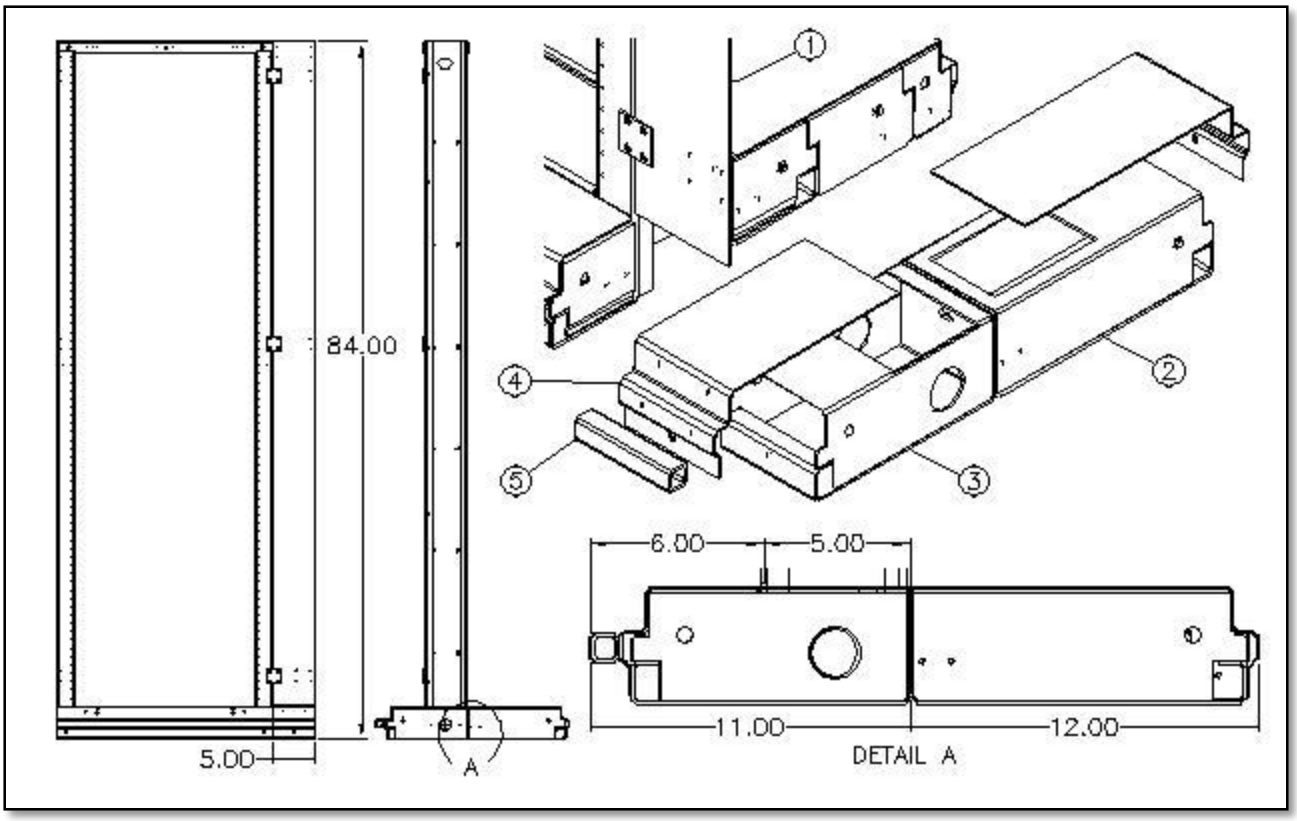

FPA225CBK23 – FILLER PANEL + BFN 5.00” X 7’-0” X 23.00” RN-CB			
ITEM	QTY	CSF #	DESCRIPTION
1	1	FP225CB	FILLER PANEL 5.00” X 79.88” RN-CB
2	1	RNBF05012CBK	NETWORK BASE FILLER W/ COVER 5.00” X 12.00” CB
3	1	BFN50B	NETWORK BAY BASE FILLER 5.00” CB
4	1	BFN50C	NETWORK BAY BASE FILLER COVER 5.00” CB
5	1	BFE501CB	BASE FILLER EXT. 1.00” X 5.00” CB
6	1	BFN - HDWR	HARDWARE FOR BFN [NOT SHOWN]
7	1	FPA KIT25	FILLER PANEL HARDWARE KIT 7’-0” [NOT SHOWN]

NOTES:
- KIT INCLUDES BAY CONNECTING HARDWARE
- OTHER SIZES AND FINISHES AVAILABLE UPON REQUEST

Specifications subject to change. Please contact CSF Customer Service for more information.
© copyright 2004 Central Steel Fabricators, Inc.
http://www.centralsteelfab.com ◆ 2100 Parkes Drive, Broadview, IL 60155
Phone: 708-652-2037 Fax: 708-652-7010

FLA125DGK30 – 7'-0" X 2.50" X 30.00" BASE FILLER W/ FILLER PANEL

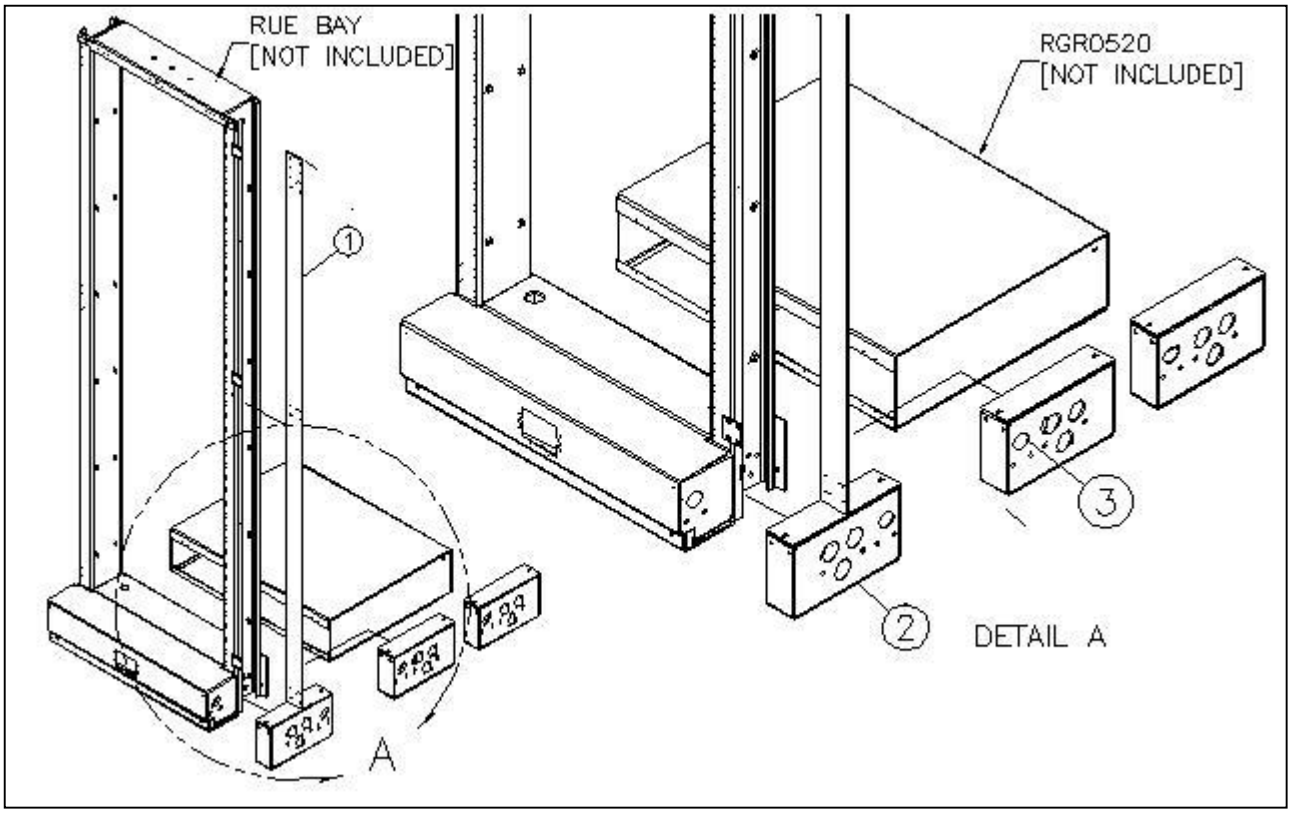

FLA125DGK30 – 7'-0" X 2.50" X 30.00" BASE FILLER W/ FILLER PANEL			
ITEM	QTY	CSF #	DESCRIPTION
1	1	FL125DG	FILLER PANEL 2.50" X 77.88" RU-DG
2	1	BFU2510DG	RU-CLOSED BASE FILLER 2.50" X 10.00" DG
3	1	BFU2520DG	RU-CLOSED BASE FILLER 2.50" X 20.00" DG
4	1	FPA KIT25	FILLER PANEL HARDWARE KIT 7'-0" [NOT SHOWN]
5	1	BFN HARDWARE	HARDWARE FOR BFN250/500 [NOT SHOWN]

NOTES:
- OTHER SIZES AND FINISHES AVAILABLE UPON REQUEST

Specifications subject to change. Please contact CSF Customer Service for more information.
© copyright 2004 Central Steel Fabricators, Inc.
http://www.centralsteelfab.com ◆ 2100 Parkes Drive, Broadview, IL 60155
Phone: 708-652-2037 Fax: 708-652-7010

FPSX25CBK31- 7'-0" X W IN BASE FILLER WITH FILLER PANEL

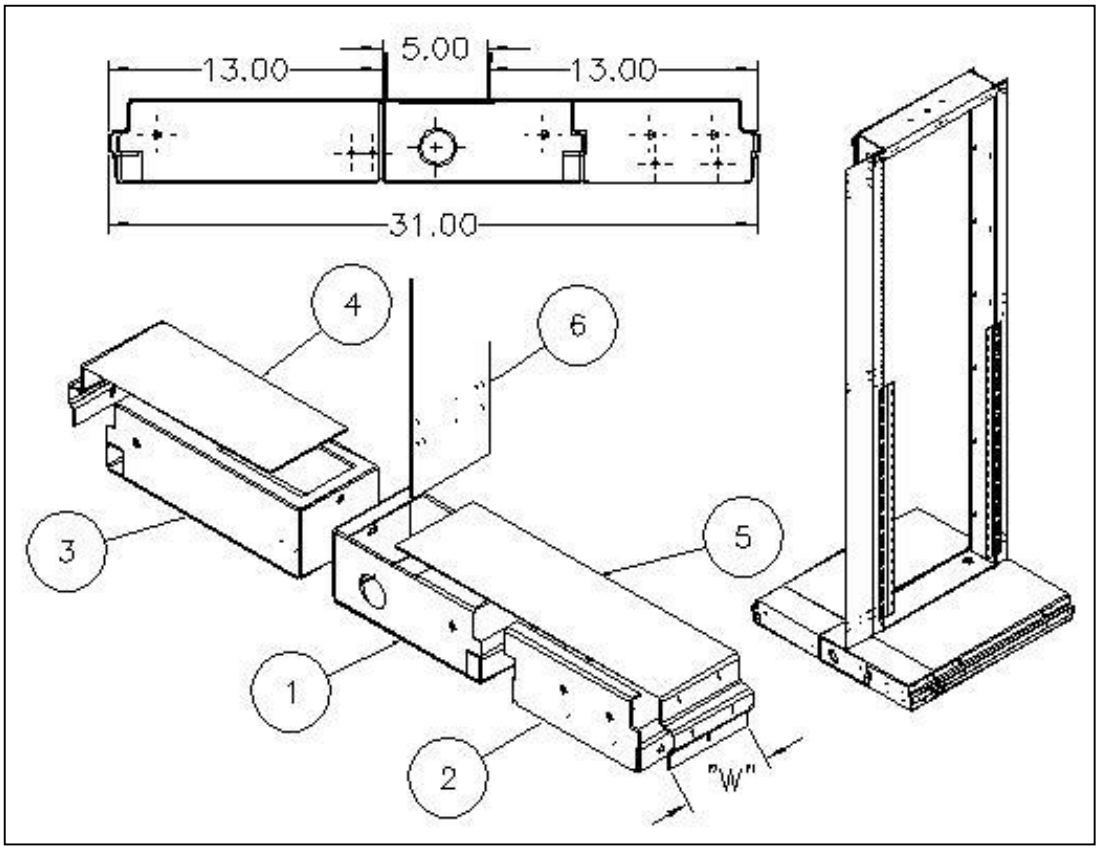

FPS125CBK31 2.50" WIDE CONFIGURATION (13+5+13)				
ITEM	QTY	CSF #	"W"	DESCRIPTION
1	1	BFN25BCB	2.50"	BAY FILLER BASE NTWK 2.5" X 10"
2	1	RNB08025CB	2.50"	BASE FILLER EXTNDR NTWK 2.5" X 8"
3	1	RBFN02513CB	2.50"	RMVBL FILLER BASE NTWK 2.5" X 13"
4	1	RNC02513CB	2.50"	BASE FILLER COVER NTWK 2.5" X 13"
5	1	RNC02518CB	2.50"	BASE FILLER COVER NTWK 2.5" X 18"
6	1	FP125CB	2.50"	FILLER PANEL NTWK 2.5" X 7.0'
FPS225CBK31 5.00" WIDE CONFIGURATION (13+5+13)				
1	1	BFN50BCB	5.00"	BAY FILLER BASE NTWK 5.0" X 10"
2	1	RNB08050CB	5.00"	BASE FILLER EXTNDR NTWK 5.0" X 8"
3	1	RBFN05013CB	5.00"	RMVBL FILLER BASE NTWK 5.0" X 13"
4	1	RNC05013CB	5.00"	BASE FILLER COVER NTWK 5.0" X 13"
5	1	RNC05018CB	5.00"	BASE FILLER COVER NTWK 5.0" X 18"
6	1	FP225CB	5.00"	FILLER PANEL NTWK 5.0" X 7.0'

NOTES:
- KIT INCLUDES BAY CONNECTING HARDWARE
- OTHER SIZES AND FINISHES AVAILABLE UPON REQUEST

Specifications subject to change. Please contact CSF Customer Service for more information.

© copyright 2004 Central Steel Fabricators, Inc.
http://www.centralsteelfab.com ◆ 2100 Parkes Drive, Broadview, IL 60155
Phone: 708-652-2037 Fax: 708-652-7010

FPSX25CBK36- 7'-0" X W IN BASE FILLER WITH FILLER PANEL

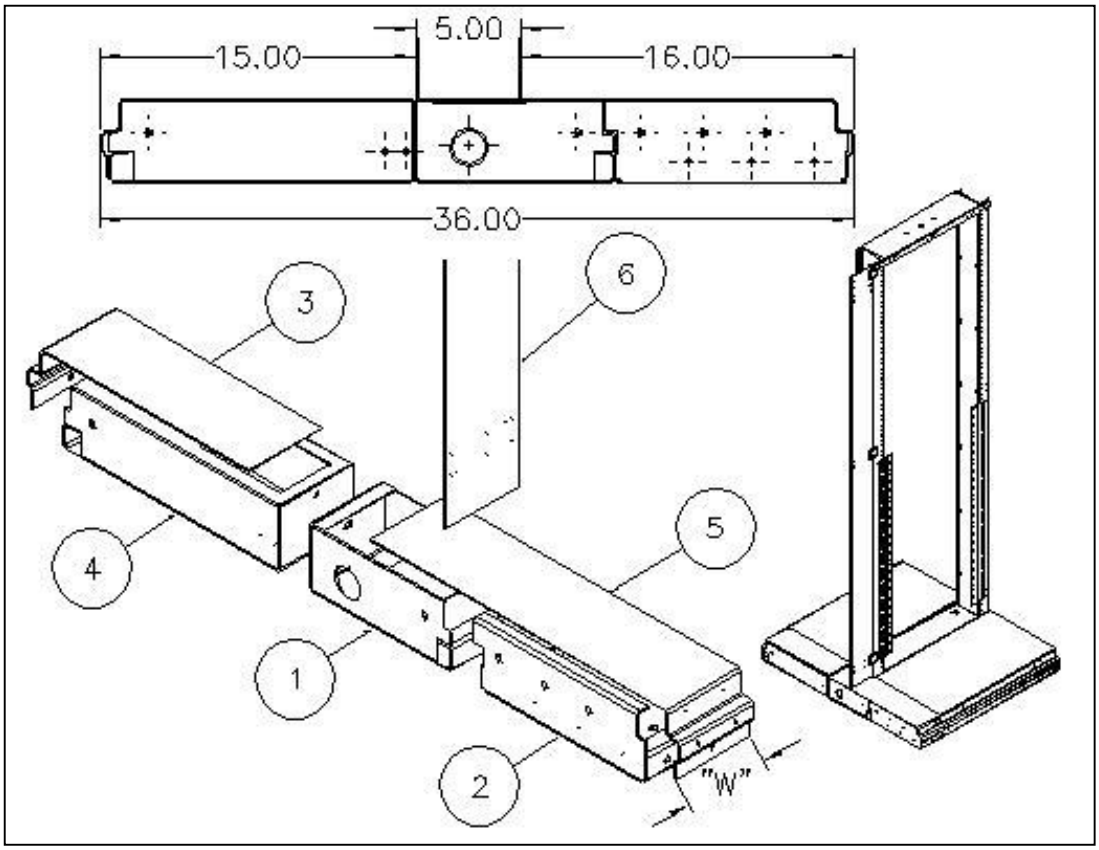

FPS125CBK36 2.50" WIDE CONFIGURATION (13+5+13)				
ITEM	QTY	CSF #	"W"	DESCRIPTION
1	1	BFN25BCB	2.50"	BAY FILLER BASE NTWK 2.5" X 10"
2	1	RNB11025CB	2.50"	BASE FILLER EXTNDR NTWK 2.5" X 11"
3	1	RNC02515CB	2.50"	BASE FILLER COVER 2.5" X 15"
4	1	RBFN02515CB	2.50"	RMVBL FILLER BASE NTWK 2.5" X 15"
5	1	RNC02521CB	2.50"	BASE FILLER COVER NTWK 2.5" X 21"
6	1	FP125CB	2.50"	FILLER PANEL NTWK 2.5" X 7.0'
FPS225CBK36 5.00" WIDE CONFIGURATION (13+5+13)				
1	1	BFN50BCB	5.00"	BAY FILLER BASE NTWK 5.0" X 10"
2	1	RNB11050CB	5.00"	BASE FILLER EXTNDR NTWK 5.0" X 11"
3	1	RNC05015CB	5.00"	BASE FILLER COVER 5.0" X 15"
4	1	RBFN05015CB	5.00"	RMVBL FILLER BASE NTWK 5.0" X 15"
5	1	RNC05021CB	5.00"	BASE FILLER COVER NTWK 5.0" X 21"
6	1	FP225CB	5.00"	FILLER PANEL NTWK 5.0" X 7.0'

NOTES:
- KIT INCLUDES BAY CONNECTING HARDWARE
- OTHER SIZES AND FINISHES AVAILABLE UPON REQUEST

Specifications subject to change. Please contact CSF Customer Service for more information.

© copyright 2004 Central Steel Fabricators, Inc.
http://www.centralsteelfab.com ◆ 2100 Parkes Drive, Broadview, IL 60155
Phone: 708-652-2037 Fax: 708-652-7010

FILLER PANEL KIT 7'-0" + 2.50" BAY FILLER/ NETWORK – FPC125CBK16

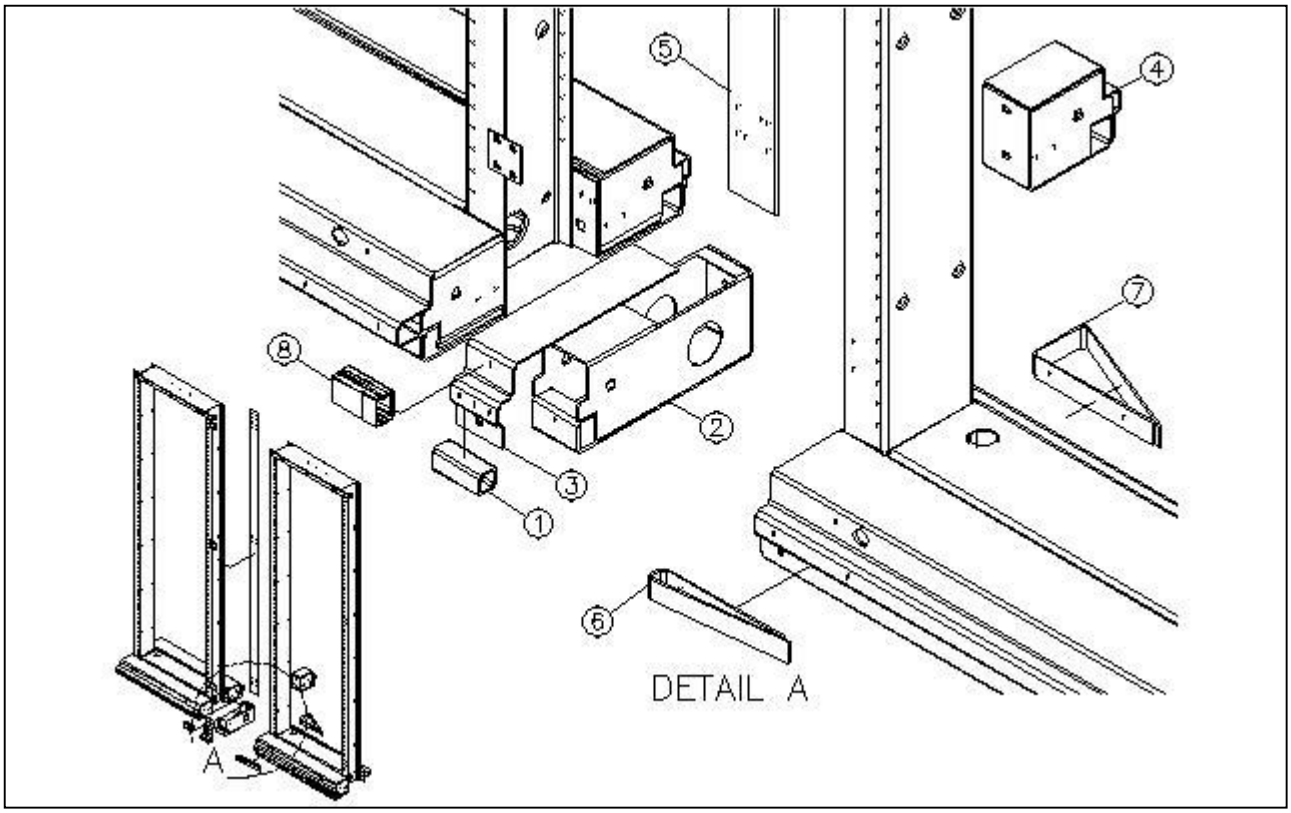

FPC125CBK16 – FILLER PANEL KIT 7'-0" + 2.50" BAY FILLER/ NETWORK			
ITEM	QTY	PART#	DESCRIPTION
1	1	BFE201CB	BASE FILLER EXT 1.00" X 2.50" CB
2	1	BFN25B	BAY FILLER BASE NETWORK 2.50" CB
3	1	BFN25C	BAY FILLER COVER NETWORK 2.50" CB
4	1	BFN2550CB	BAY FILLER EXT NWB 2.50" X 5.00" CB
5	1	FP125CB	FILLER PANEL 2.50" X 79.88" RN-CB
6	1	GRA01CB	GUARD RAIL ADAPTER 1.00" DP. X 7.00" LG. – CB
7	1	GRA03CB	GUARD RAIL ADAPTER 3.00" DP. X 7.00" LG. – CB
8	1	RNPB02CBK	NETWORK BAY 2.50" BLANK POWER STRIP CB

Specifications subject to change. Please contact CSF Customer Service for more information.
© copyright 2004 Central Steel Fabricators, Inc.
http://www.centralsteelfab.com ◆ 2100 Parkes Drive, Broadview, IL 60155
Phone: 708-652-2037 Fax: 708-652-7010

FILLER PANEL KIT 7'-0" + 5.00" x 16.00" RN-CB - BAY FILLER/ NETWORK

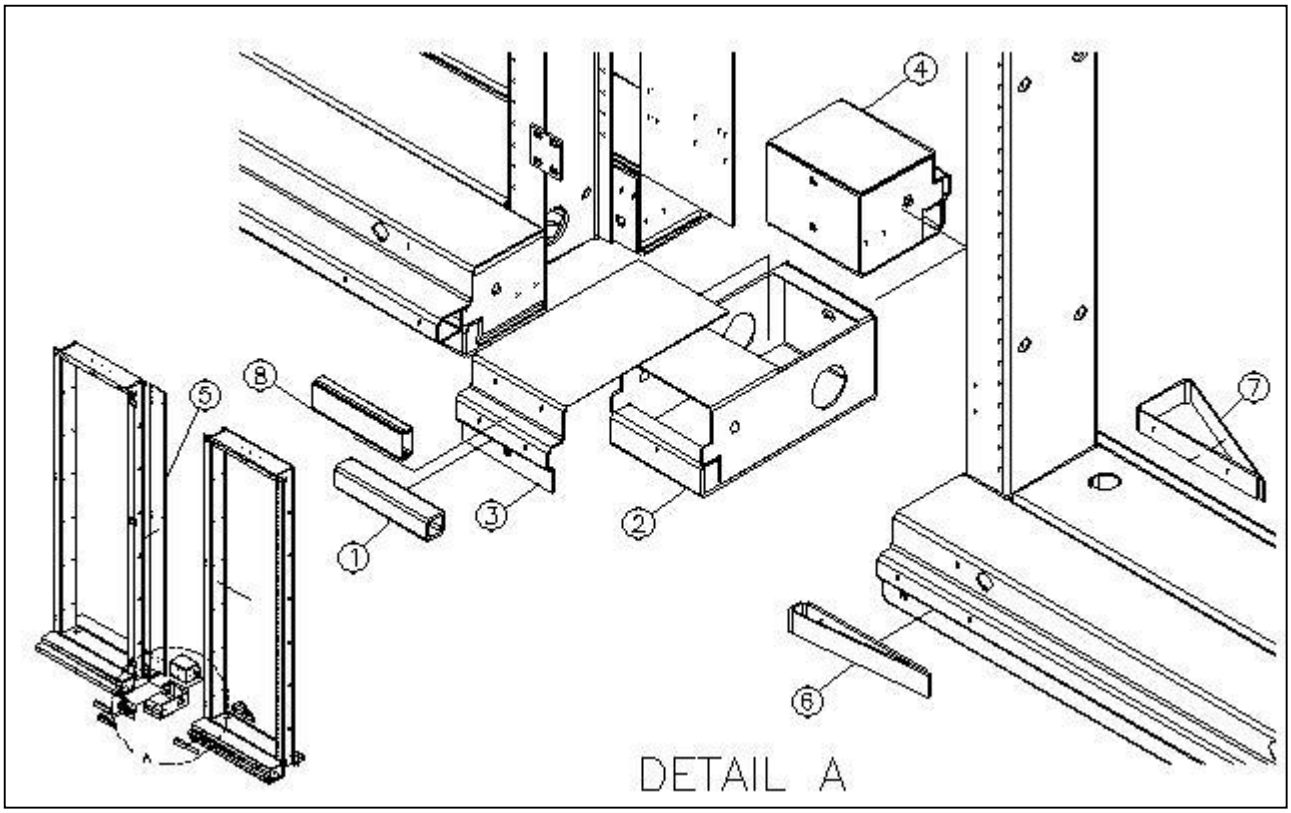

FPC225CBK16 – FILLER PANEL KIT 7'-0" + 5.00" x 16.00" RN-CB - BAY FILLER/ NETWORK			
ITEM	QTY	PART#	DESCRIPTION
1	1	BFE501CB	BASE FILLER EXT 1.00" X 5.00" CB
2	1	BFN50B	BAY FILLER BASE NETWORK 5.00" CB
3	1	BFN50C	BAY FILLER COVER NETWORK 5.00" CB
4	1	BFN5050CB	BAY FILLER EXT NWB 5.00" X 5.00" CB
5	1	FP225CB	FILLER PANEL 5.00" X 79.88" RN-CB
6	1	GRA01CB	GUARD RAIL ADAPTER 1.00" DP. X 7.00" LG. – CB
7	1	GRA03CB	GUARD RAIL ADAPTER 3.00" DP. X 7.00" LG. – CB
8	1	RNPB05CBK	NETWORK BAY 5.00" BLANK POWER STRIP CB

Specifications subject to change. Please contact CSF Customer Service for more information.

© copyright 2004 Central Steel Fabricators, Inc.
http://www.centralsteelfab.com ◆ 2100 Parkes Drive, Broadview, IL 60155
Phone: 708-652-2037 Fax: 708-652-7010

FILLER PANEL KIT 7′-0″ + 5.00″ x 28.00″ RN-CB - BAY FILLER/ NETWORK

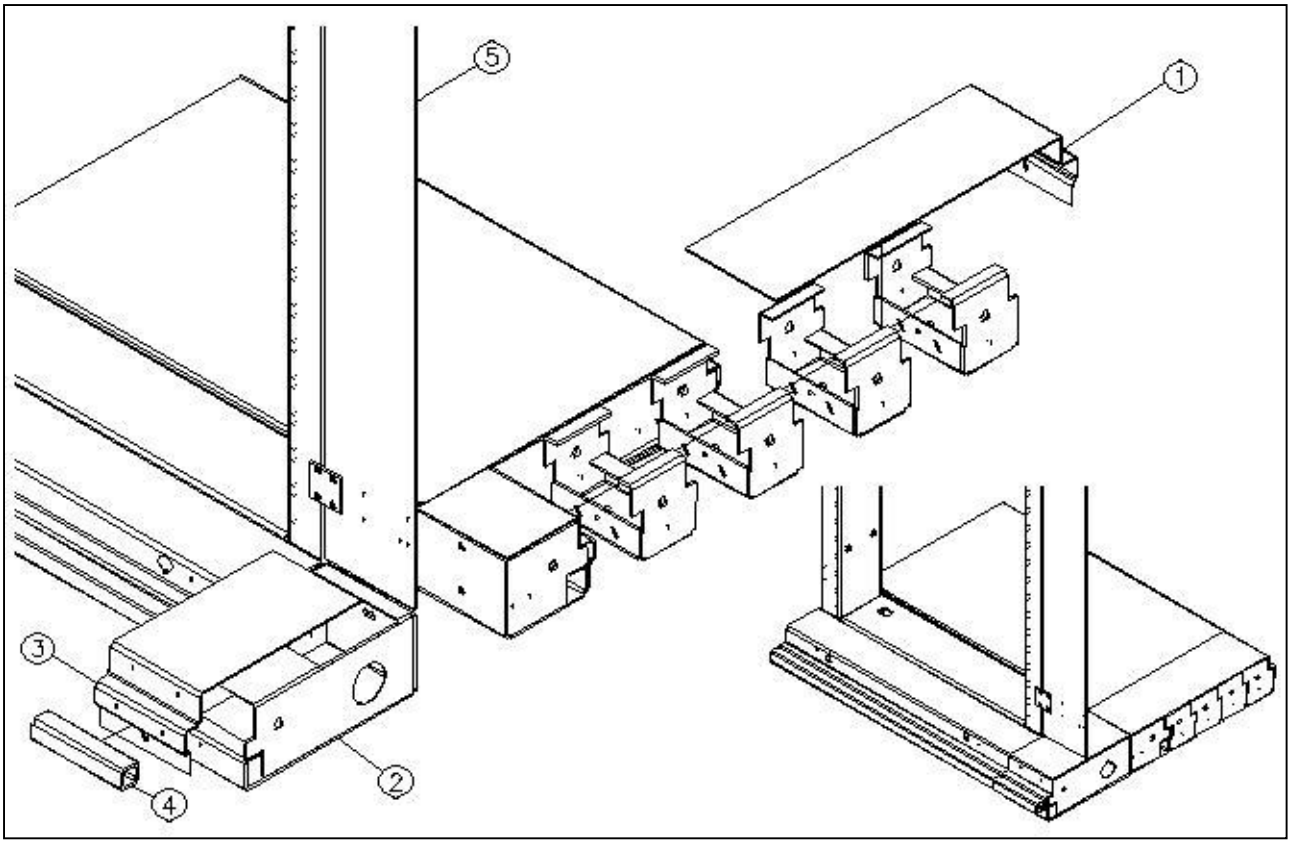

FPC225CBK28 – FILLER PANEL KIT 7′-0″ + 5.00″ x 28.00″ RN-CB - BAY FILLER/ NETWORK			
ITEM	QTY	PART#	DESCRIPTION
1	1	RNBF05017CBK	BASE FILLER KIT 5.00″ X 17.00″ W/ COVER CB
2	1	BFN50B	BAY FILLER BASE NETWORK 5.00″ CB
3	1	BFN50C	BAY FILLER COVER NETWORK 5.00″ CB
4	1	BFE501CB	BASE FILLER EXT. 1.00″ X 5.00″ CB
5	1	FP225CB	FILLER PANEL 5.00″ X 79.88″ RN-CB
6	1	BFN HARDWARE	BFN HARDWARE [NOT SHOWN]
7	1	FPA KIT25	FILLER PANEL HARDWARE KIT [NOT SHOWN]

Specifications subject to change. Please contact CSF Customer Service for more information.
© copyright 2004 Central Steel Fabricators, Inc.
http://www.centralsteelfab.com ◆ 2100 Parkes Drive, Broadview, IL 60155
Phone: 708-652-2037 Fax: 708-652-7010

RNE6525ADK87 – SEISMIC NETWORK BAY

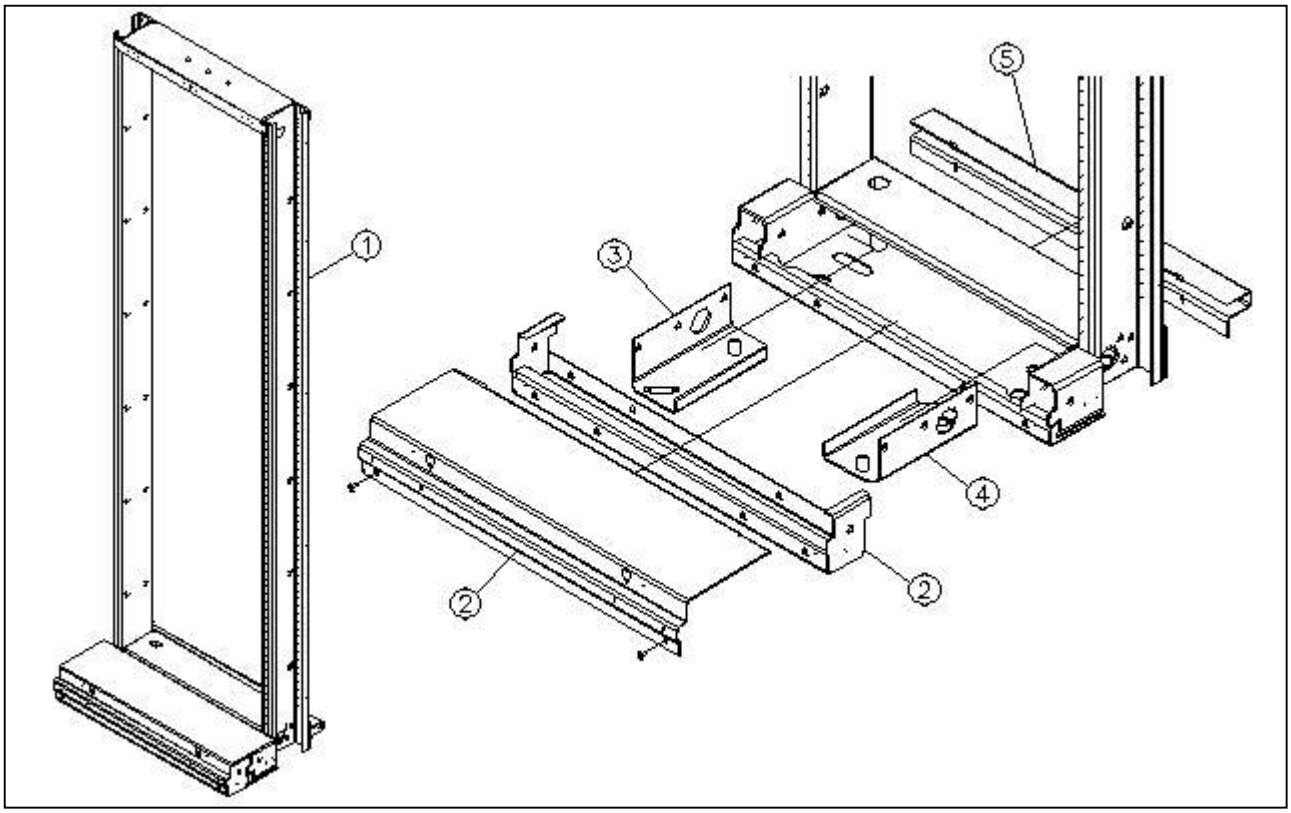

RNE6525ADK87 – SEISMIC NETWORK BAY [2+8] 23.00” X 7’-0” [1.00” SPC]			
ITEM	QTY	PART#	DESCRIPTION
1	1	RNE6525AD	SEISMIC NETWORK BAY 23.00” X 7’-0”
2	1	RNB323ADK	NETWORK BASE EXTENDER 23.00” X 3.00” W/ 8.00” COVER
3	1	R208LZY	NETWORK BAY SEISMIC PLATE L.H.
4	1	R208RZY	NETWORK BAY SEISMIC PLATE R.H.
5	1	RGR2AD	REAR GUARD RAIL 2.00”
6	1	NWB KITAD	NETWORK BAY HARDWARE KIT – [NOT SHOWN]
7	1	R209HDWR	R208 HARDWARE [NOT SHOWN]

Specifications subject to change. Please contact CSF Customer Service for more information.
© copyright 2004 Central Steel Fabricators, Inc.
http://www.centralsteelfab.com ◆ 2100 Parkes Drive, Broadview, IL 60155
Phone: 708-652-2037 Fax: 708-652-7010

RNE5525CBK81 ASSEMBLY – SEISMIC NETWORK BAY ASSEMBLY

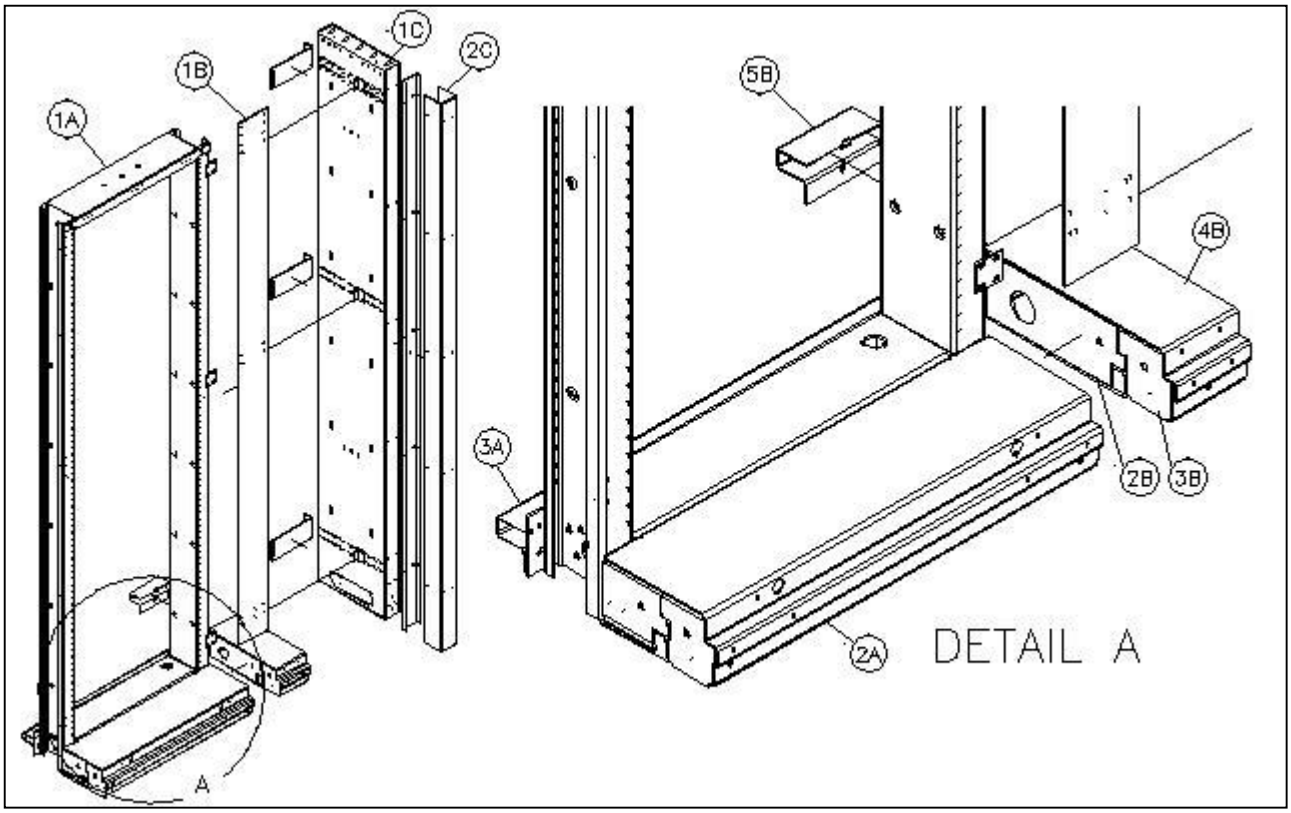

RNE5525CBK81 – SEISMIC NETWORK BAY [8-5-2] 23.00" X 7'-0"			
ITEM	QTY	PART#	DESCRIPTION
1A	1	RNE5525CB	SNWB GBWF 23.00" X 7'-0" CB
2A	1	RNB323CBK08	NWB BASE EXTENDER 3.00" X 23.00" W/ 8.00" COVER CB
3A	1	RGR2CB	REAR GUARD RAIL 2.00"
4A	1	R208LZY	NWB SEISMIC PLATE L.H. ZY [NOT SHOWN]
5A	1	R208RZY	NWB SEISMIC PLATE R.H. ZY [NOT SHOWN]
6A	1	R209HDWR	HARDWARE FOR R208 SEISMIC PLATES [NOT SHOWN]
7A	1	RNCBK80	NWB CB K80 HARDWARE KIT [NOT SHOWN]

FPA225CBK15 – FILLER PANEL + BASE FILLER 5.00" X 7'-0" X 15.00" RN-CB			
ITEM	QTY	PART#	DESCRIPTION
1B	1	FP225CB	FILLER PANEL 5.00" X 79.88" RN-CB
2B	1	BFN50B	BAY FILLER BASE NTWK 5.00" CB
3B	1	RNB305CB	NWB BASE BFN50B EXTENDER 3.00" X 5.00" CB
4B	1	RNC05013CB	NWB BASE FILLER COVER 13.00" X 5.00" CB
5B	1	BFG502CB	BASE FLOOR REAR 2.00" X 5.00" CB
6B	1	BFN HDWR	HARDWARE FOR BFN [NOT SHOWN]
7B	1	FPA KIT25	FILLER PANEL HDWR KIT 7'-0" [NOT SHOWN]

EGA1525CB – END GUARD ASSEMBLY 15.00" X 2.50" CB			
ITEM	QTY	PART#	DESCRIPTION
1C	1	EGA1225CB	END GUARD ASSEMBLY 12.00" X 2.50" CB
2C	1	EGE084CBK	3.00" EXTENSION FOR EGA SERIES CB

Specifications subject to change. Please contact CSF Customer Service for more information.

© copyright 2004 Central Steel Fabricators, Inc.
http://www.centralsteelfab.com ◆ 2100 Parkes Drive, Broadview, IL 60155
Phone: 708-652-2037 Fax: 708-652-7010

FPA225CBK15 – Filler Panel + Base Filler 5.00” x 7’-0” x 15.00” RN-CB

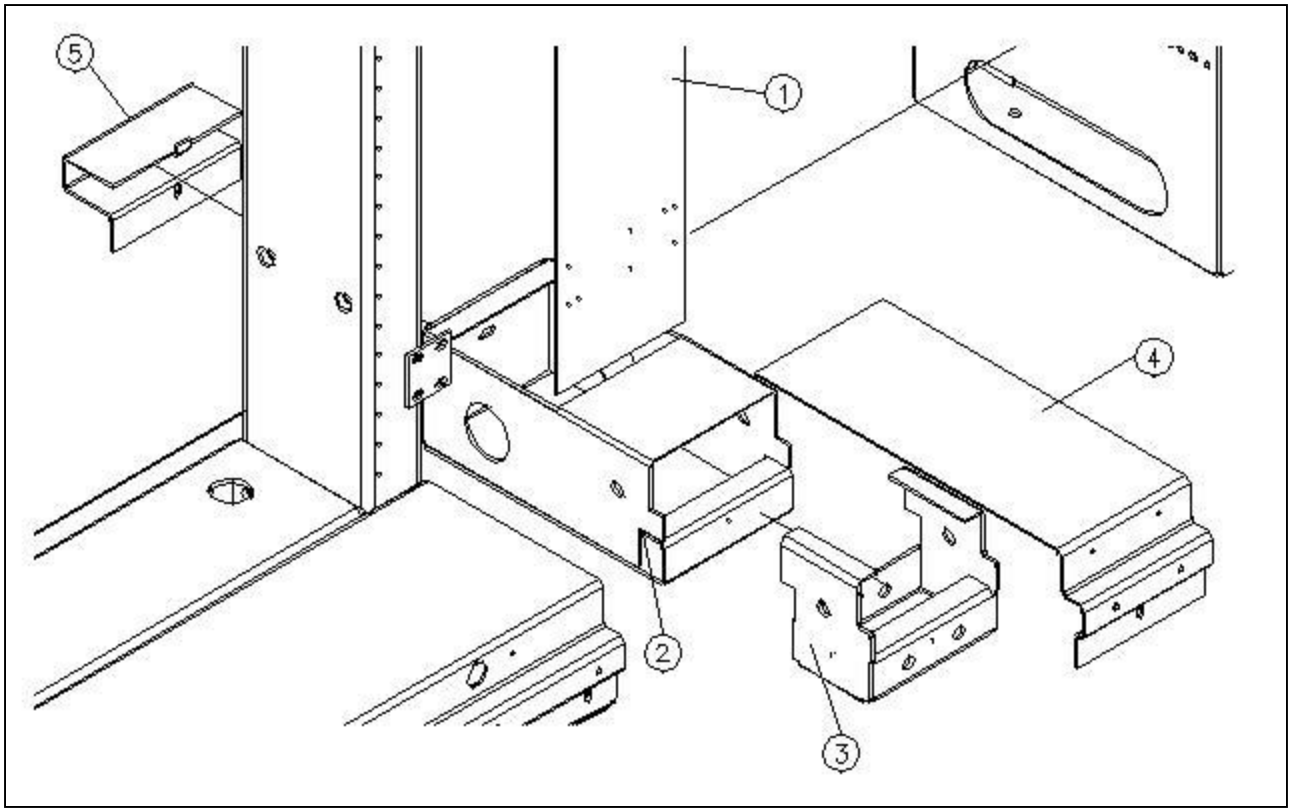

FPA225CBK15 – FILLER PANEL + BASE FILLER 5.00” X 7’-0” X 15.00” RN-CB			
ITEM	QTY	PART#	DESCRIPTION
1	1	FP225CB	FILLER PANEL 5.00” X 79.88” RN-CB
2	1	BFN50B	BAY FILLER BASE NTWK 5.00” CB
3	1	RNB305CB	NWB BASE BFN50B EXTENDER 3.00” X 5.00” CB
4	1	RNC05013CB	NWB BASE FILLER COVER 13.00” X 5.00” CB
5	1	BFG502CB	BASE FLOOR REAR 2.00” X 5.00” CB
6	1	BFN HDWR	HARDWARE FOR BFN [NOT SHOWN]
7	1	FPA KIT25	FILLER PANEL HDWR KIT 7’-0” [NOT SHOWN]

Specifications subject to change. Please contact CSF Customer Service for more information.
© copyright 2004 Central Steel Fabricators, Inc.
http://www.centralsteelfab.com ◆ 2100 Parkes Drive, Broadview, IL 60155
Phone: 708-652-2037 Fax: 708-652-7010

RN5525CBK62 – NON-SEISMIC NETWORK BAY

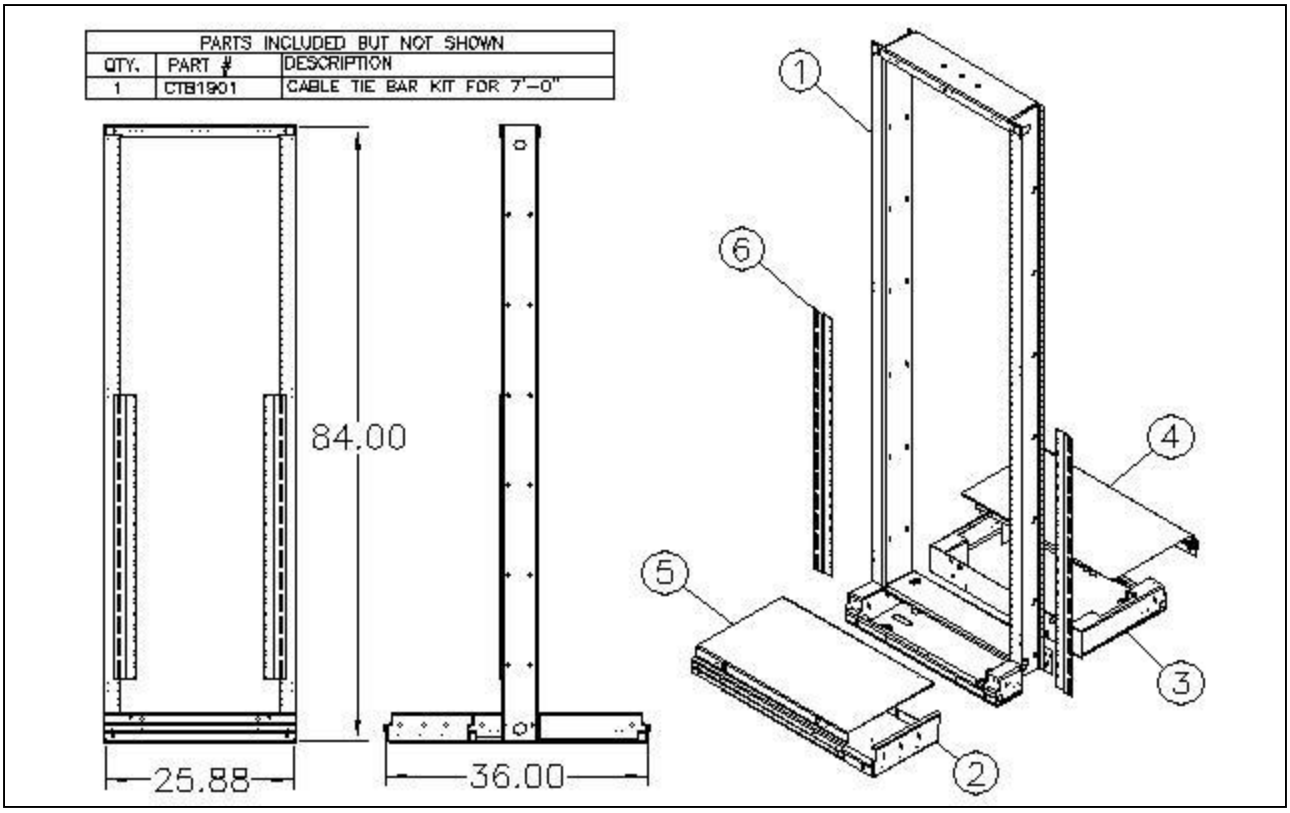

RN5525CBK62 – NETWORK GBWF [15+16] 23.00” X 7’-0” CB			
ITEM	QTY	PART#	DESCRIPTION
1	1	RN5525	NETWORK BAY 23.00” X 7’-0” [1.00” SPC] GBWF
2	1	RNB1123	11.00” GUARD BOX EXTENDER 23.00” WIDE
3	1	RNR1523	15.00” REMOVABLE GUARD BOX 23.00” WIDE
4	1	RNC215	23.00” BAY COVER, 15.00” DEEP
5	1	RNC216	23.00” BAY COVER, 16.00” DEEP
6	2	RA722CBK	22 RMU RACK ADAPTER UNIVERSAL TO EIA

- KIT INCLUDES BAY CONNECTING HARDWARE
- ORDER FLOOR ANCHORING AND TOP SUPPORT HARDWARE SEPARATELY

- OTHER SIZES AND FINISHES AVAILABLE UPON REQUEST

Specifications subject to change. Please contact CSF Customer Service for more information.

© copyright 2004 Central Steel Fabricators, Inc.
http://www.centralsteelfab.com ◆ 2100 Parkes Drive, Broadview, IL 60155
Phone: 708-652-2037 Fax: 708-652-7010

RNE5525CBK62 – SEISMIC NETWORK BAY

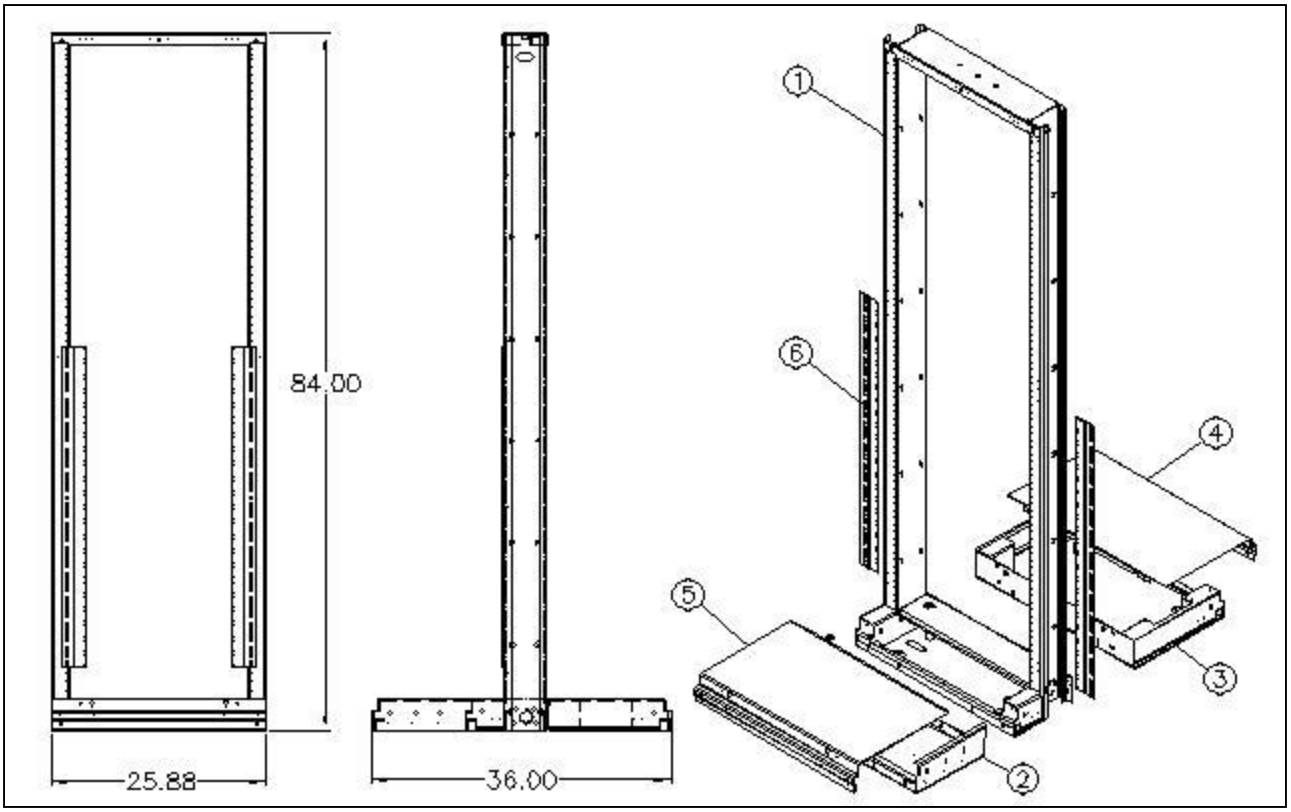

RNE5525CBK62 – SEISMIC NETWORK GBWF [15+16] 23.00" X 7'-0" CB			
ITEM	QTY	PART#	DESCRIPTION
1	1	RNE5525	SEISMIC NETWORK BAY 23.00" X 7'-0" [1.00" SPC] GBWF
2	1	RNB1123	11.00" GUARD BOX EXTENDER 23.00" WIDE
3	1	RNR1523	15.00" REMOVABLE GUARD BOX 23.00" WIDE
4	1	RNC215	23.00" BAY COVER, 15.00" DEEP
5	1	RNC216	23.00" BAY COVER, 16.00" DEEP
6	2	RA722CBK	22 RMU RACK ADAPTER UNIVERSAL TO EIA
7	1	CTB1901	CABLE TIE BAR KIT [NOT SHOWN]

- KIT INCLUDES BAY CONNECTING HARDWARE
- ORDER FLOOR ANCHORING AND TOP SUPPORT HARDWARE SEPARATELY

- OTHER SIZES AND FINISHES AVAILABLE UPON REQUEST

Specifications subject to change. Please contact CSF Customer Service for more information.

© copyright 2004 Central Steel Fabricators, Inc.
http://www.centralsteelfab.com ◆ 2100 Parkes Drive, Broadview, IL 60155
Phone: 708-652-2037 Fax: 708-652-7010

RUE5125DGK67 – SEISMIC UNEQUAL FLANGE GBWF [5+20] 23.00” X 7’-0” [1.75 SPC]

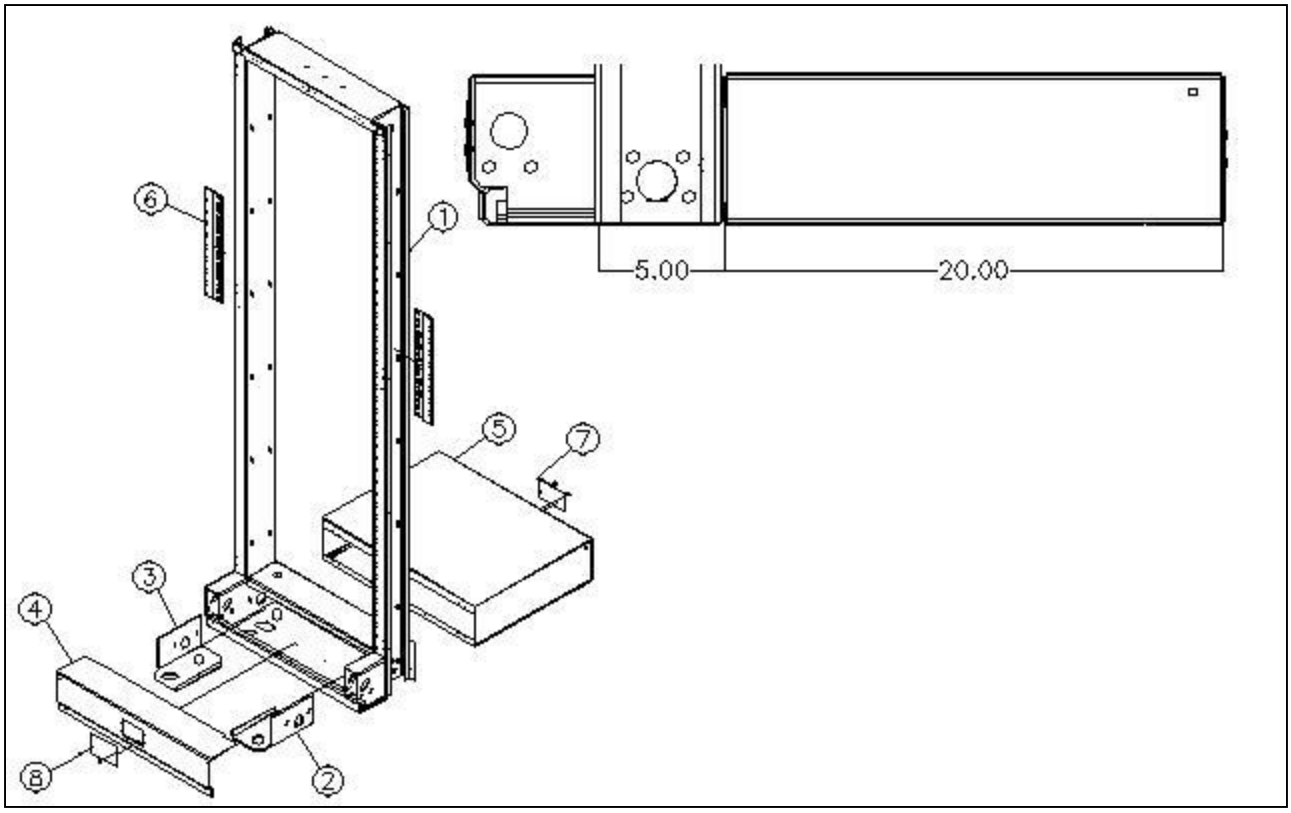

RUE5125DGK67 – SEISMIC UNEQUAL FLANGE GBWF [5+20] 23.00” X 7’-0” [1.75” SPC]			
ITEM	QTY	PART#	DESCRIPTION
1	1	RUE5125DG	SEISMIC UNEQUAL FLANGE GBWF 23.00” X 7’-0” [1.75” SPC]
2	1	R209RZY	UFER SEISMIC PLATE R.H. ZY
3	1	R209LZY	UFER SEISMIC PLATE L.H. ZY
4	1	R401DG	UNEQUAL FLANGE RACK COVER ASSEMBLY 5.00” DG.
5	1	RGR0520DG	23.00” REAR GUARD RAIL W/ OUTLET 20.00” DP. DG
6	2	RA709DGK	RACK ADAPTER KIT 23 UNIVERSAL – 19 EIA 9RU DG.
7	2	P36B045DG	2.75” X 4.50” EG PLATE DG
8	4	PH0200	8-32 X 1/4” PAN HEAD M/S ZY
9	1	RUE-KIT DG	SUFER HARDWARE KIT DG. [NOT SHOWN]

- OTHER SIZES AND FINISHES AVAILABLE UPON REQUEST

Specifications subject to change. Please contact CSF Customer Service for more information.

© copyright 2004 Central Steel Fabricators, Inc.
http://www.centralsteelfab.com ◆ 2100 Parkes Drive, Broadview, IL 60155
Phone: 708-652-2037 Fax: 708-652-7010

RUE5125DGK68 – SEISMIC UFER GBWF [5+5+20] 23.00” X 7’-0” [1.75 SPC]

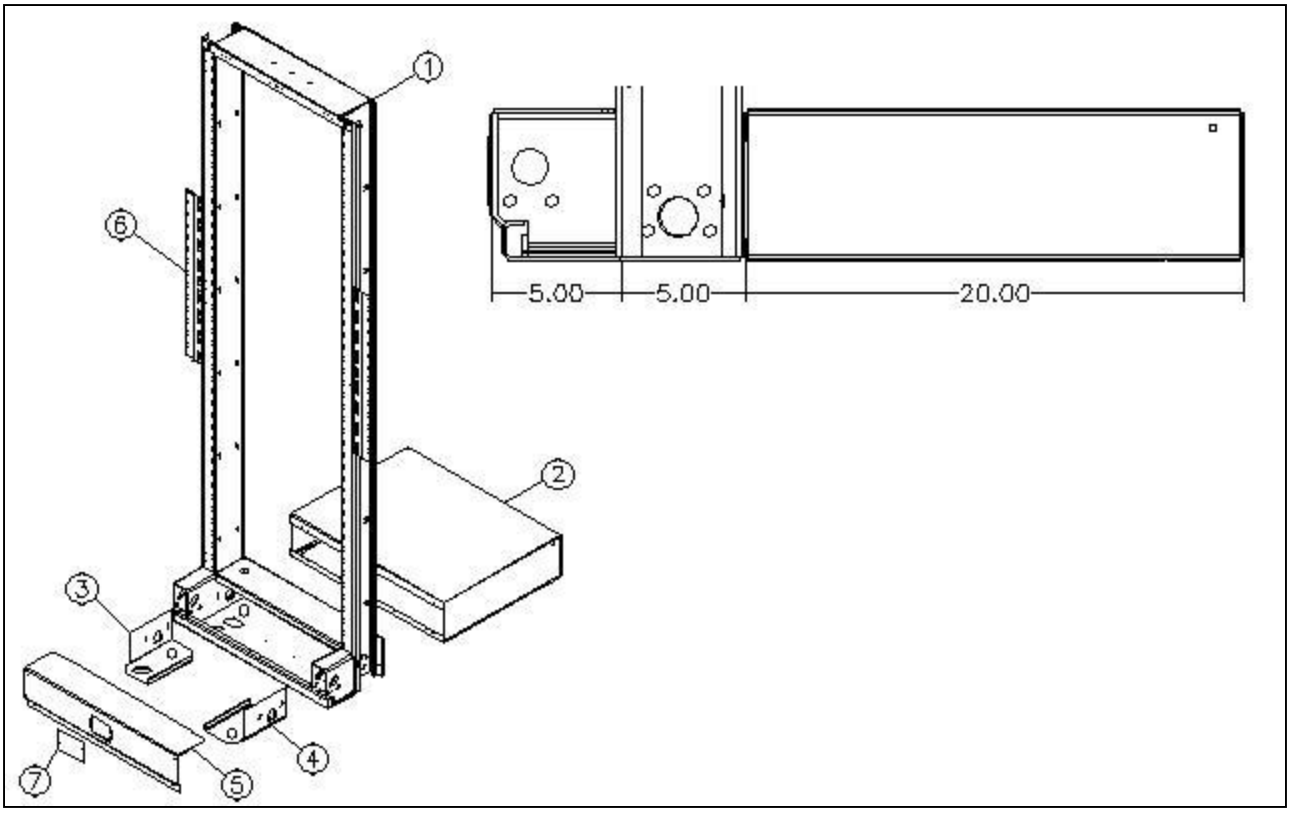

RUE5125DGK68 – SEISMIC UFER GBWF [5+5+20] 23.00” X 7’-0” [1.75” SPC]			
ITEM	QTY	PART#	DESCRIPTION
1	1	RUE5125DG	SEISMIC UFER GBWF 23.00” X 7’-0” [1.75” SPC]
2	1	RGR0520DG	23.00” REAR GUARD RAIL W/ OUTLET 20.00”
3	1	R209LZY	UFER SEISMIC PLATE L.H.
4	1	R209RZY	UFER SEISMIC PLATE R.H.
5	1	R401DG	UFER FLANGE RACK COVER ASSEMBLY 5.00”
6	2	RA714DGK	RACK ADAPTER KIT 23 UNIVERSAL – 19 EIA 14RU DG.
7	2	P36B045DG	END GUARD PLATE 2.75” X 4.50”
8	1	RUE-KITDG	SEISMIC UFER HARDWARE KIT DG [NOT SHOWN]
9	6	PH0200ZY	8-32 X 1/4 PAN HEAD M/S [NOT SHOWN]

- OTHER SIZES AND FINISHES AVAILABLE UPON REQUEST

Specifications subject to change. Please contact CSF Customer Service for more information.

© copyright 2004 Central Steel Fabricators, Inc.
http://www.centralsteelfab.com ◆ 2100 Parkes Drive, Broadview, IL 60155
Phone: 708-652-2037 Fax: 708-652-7010

RUE5125DGK69 – SEISMIC UFER GBWF [5+20] 23.00” X 7’-0” [1.75” SPC]

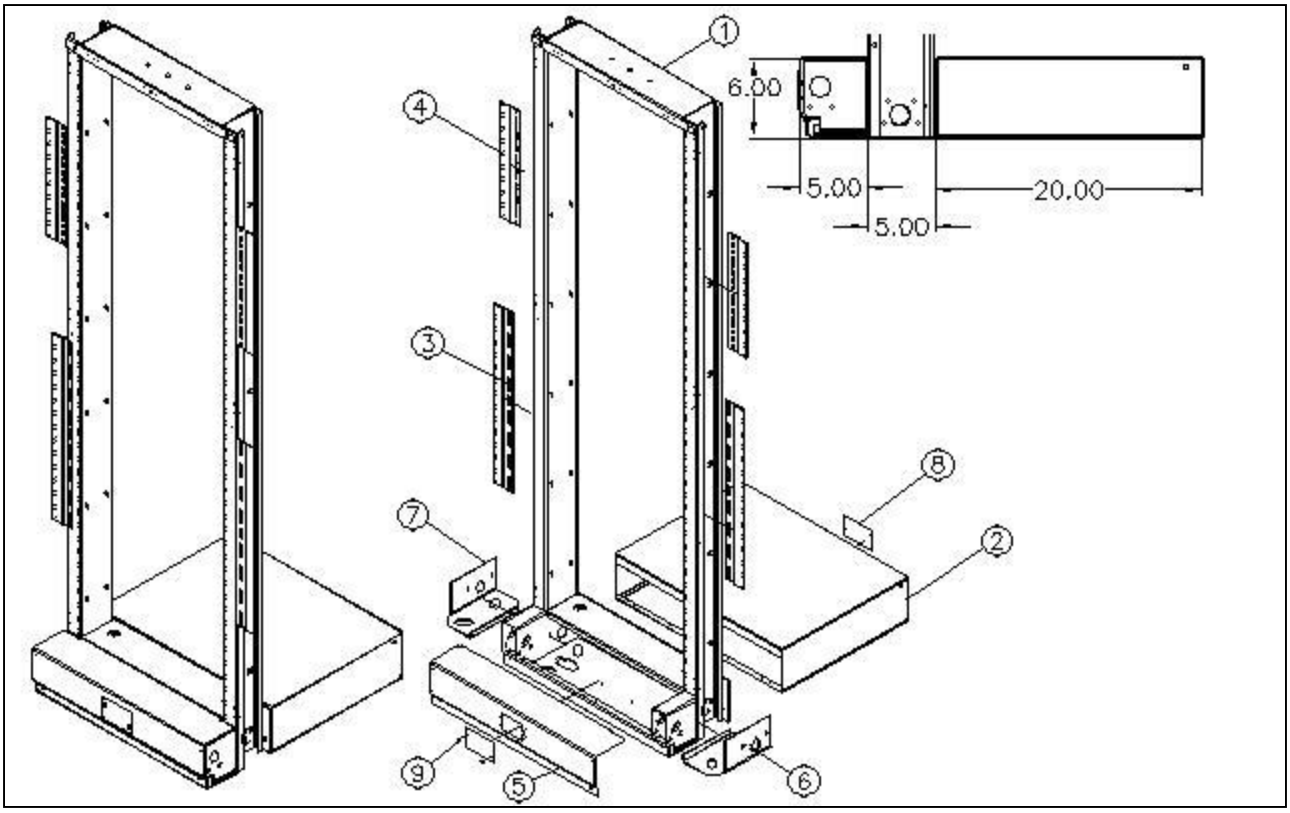

RUE5125DGK69 – SEISMIC UFER GBWF [5+20] 23.00” X 7’-0” [1.75” SPC]			
ITEM	QTY	PART#	DESCRIPTION
1	1	RUE5125DG	SEISMIC UFER GBWF 23.00” X 7’-0” [1.75” SPC]
2	1	RGR0520DG	23.00” REAR GUARD RAIL W/ OUTLET 20.00”
3	1	RA714DGK	RACK ADAPTER KIT
4	1	RA709DGK	RACK ADAPTER KIT
5	1	R401DG	UFER FLANGE RACK COVER ASSEMBLY 5.00”
6	1	R209RZY	UFER SEISMIC PLATE R.H. ZY
7	1	R209LZY	UFER SEISMIC PLATE L.H. ZY
8	2	P36B045DG	2.75” X 4.50” EG PLATE DG
9	6	PH0200ZY	8-32 X 1/4 PAN HEAD M/S

- OTHER SIZES AND FINISHES AVAILABLE UPON REQUEST

Specifications subject to change. Please contact CSF Customer Service for more information.

© copyright 2004 Central Steel Fabricators, Inc.
http://www.centralsteelfab.com ◆ 2100 Parkes Drive, Broadview, IL 60155
Phone: 708-652-2037 Fax: 708-652-7010

FPX025CBK – FILLER PANEL + SIGMA BASE FILLER 2.00” X 7’-0” X 16.00” RNX-CB

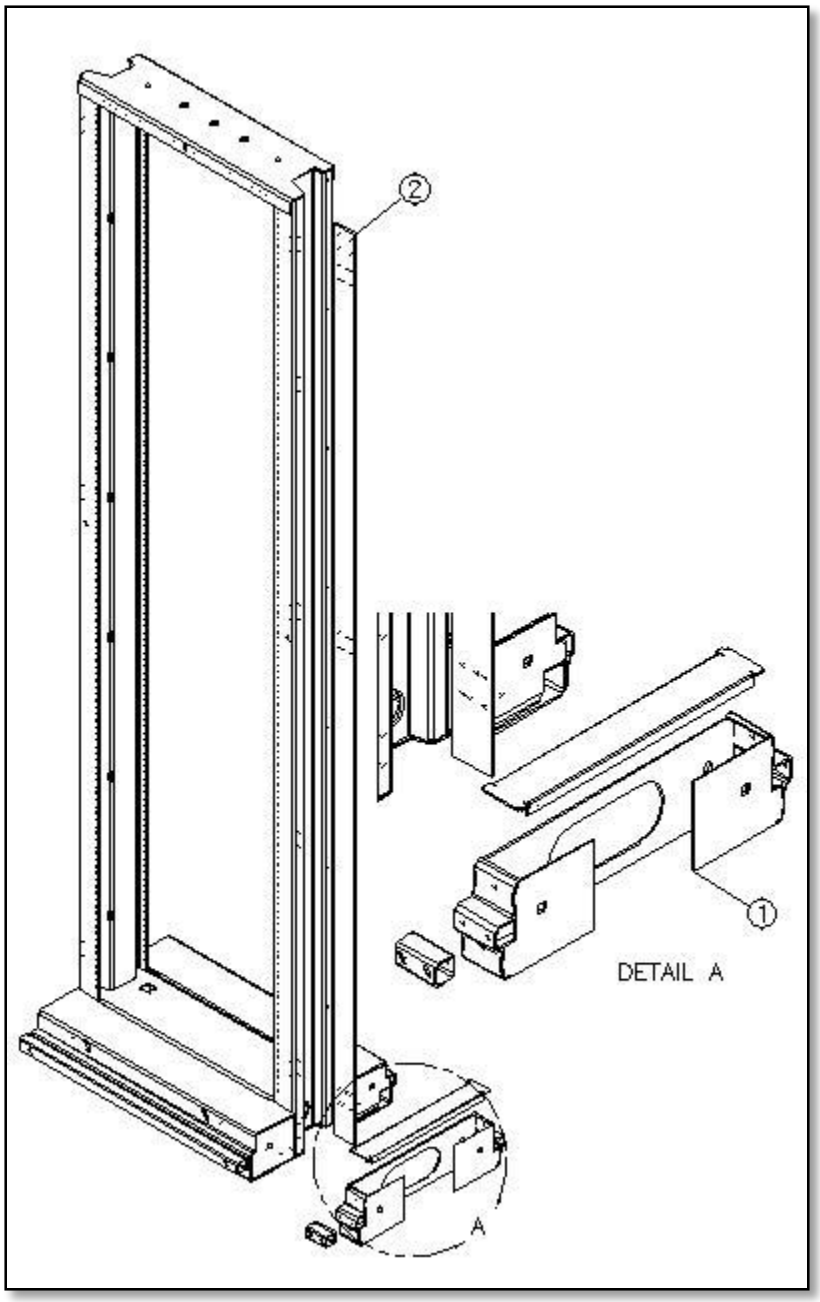

FPX025CBK – FILLER PANEL + SIGMA BASE FILLER 2.00” X 7’-0” X 16.00” RNX-CB			
ITEM	QTY	PART#	DESCRIPTION
1	1	BFX0215CB	SIGMA BASE FILLER ASSEMBLY 2.00” X 16.00” CB
2	1	FP025CB	FILLER PANEL 2.00”X 79.88” RNX-CB
3	1	FPX KIT25	FILLER PANEL HARDWARE KIT 7’-0” SIGMA [NOT SHOWN]

Specifications subject to change. Please contact CSF Customer Service for more information.

© copyright 2004 Central Steel Fabricators, Inc.
http://www.centralsteelfab.com ◆ 2100 Parkes Drive, Broadview, IL 60155
Phone: 708-652-2037 Fax: 708-652-7010

LAST PAGE IN CATALOG
THIS PAGE LEFT INTENTIONALLY BLANK

Configured Solutions

Specifications subject to change. Please contact CSF Customer Service for more information.
© copyright 2004 Central Steel Fabricators, Inc.
http://www.centralsteelfab.com ◆ 2100 Parkes Drive, Broadview, IL 60155
Phone: 708-652-2037 Fax: 708-652-7010

CENTRAL STEEL FABRICATORS [CONFIGURED SOLUTIONS]

CSF KIT #plot	DESCRIPTION	FOOTPRINT	MOUNTING SPACES	GUARD BOX	BASE AND FILLER PANEL	USED FOR
RNE5525CBK81 Assembly	7'-0" X 23.00" Seismic Network Bay	15.00" (8-5-2)	2.00" WECO	GBWF	FPA225CBK15	
RN5525CBK62	7'-0" X 23.00" Non-Seismic Network Bay	31.00" (15+16)	1.00" WECO	GBWF		

NOTES:

- THE FIRST DIGIT OF THE X+X+X CODE IS THE DEPTH OF THE FIXED GUARD BOX SIDE. THE NEXT DIGIT IS THE WIDTH OF THE DUCT,
  AND THE LAST DIGIT IS THE DEPTH OF THE NON-FIXED GUARD BOX SIDE.
- GBWF = FIXED GUARD BOX IS ON WIDE FLANGE OF BAY
- GBNF = FIXED GUARD BOX IS ON NARROW FLANGE OF BAY
- KIT INCLUDES BAY CONNECTING HARDWARE
- ORDER FLOOR ANCHORING AND TOP SUPPORT HARDWARE SEPARATELY
- OTHER SIZES AND FINISHES AVAILABLE UPON REQUEST

Specifications subject to change. Please contact CSF Customer Service for more information.
© copyright 2004 Central Steel Fabricators, Inc.
http://www.centralsteelfab.com ◆ 2100 Parkes Drive, Broadview, IL 60155
Phone: 708-652-2037 Fax: 708-652-7010