WIREMOLD®

Outdoor Power Pedestal

Outdoor Power Pedestals offer new versatility to outdoor power applications

Provide Higher Power to Outdoor Locations

Designed to be used for high amperage outdoor applications, the Outdoor Power Pedestal can accommodate 15 to 60 amp devices. The pedestal is a durable solution to providing facility power to outdoor environments and applications such as food trucks, events or maintenance equipment. There are several configurations depending on the application requirements, including 1-gang, 2-gang or pin & sleeve device plates. Select configurations also include a hinged in-use cover that can be locked to prevent unauthorized access.

Features & Benefits

- **Provides standard power for facilities:** Can accommodate up to (2) 15-20A weather-resistant devices that can be used with the integrated while-in-use cover or any 3rd party while-in-use cover available for a 1 or 2 gang opening.
- **Provides higher amp power for facilities:** Pedestals can also accommodate higher 30-60A NEMA and CS devices. Higher amp devices that are watertight can be mounted directly to the pedestal while all others must use an appropriate weatherproof cover.
- **Pin and Sleeve Devices:** Standard Pin and Sleeve plate supports 30A Pass & Seymour Pin and Sleeve devices. **Note:** Pin and Sleeve devices do not have standard mounting hole locations, custom plates may be needed for other brands and/or amperages.
- **Height Options of 16" or 30":** Choose from two different height options to best meet the needs of your application.
- **Hinged cover with locking tab:** Cover closes automatically to meet while-in-use requirements for 15 and 20 amp devices and provides capability to lock cover when not in use to prevent unauthorized access.
- **Outdoor-rated construction:** Sheet metal form designed for durability in outdoor locations. UL listed to NEMA 3R requirements to ensure optimal performance.
- **Durable, premium finishes:** Available in two outdoor-rated finishes to complement your space design. Choose from black or silver to perfectly match your project.
- **UL Listed:** Standard 1773.
- **1 & 2 Gang Options:** Available in single or dual gang options with select configurations of dual gang including an internal divider for power and low voltage applications.

Vertical Markets

- **Commercial**
- **Parks**
- **Entertainment**
- **Transit**
- **Hospitality**

Compliance

CULus Listed, File Number E479489, Guide PUPR
Outdoor Power Pedestals are UL Listed to meet NEMA 3R requirements for use in outdoor locations.
Outdoor Power Pedestals comply with ADA guidelines.

Outdoor Power Pedestal Ordering Information

Catalog No./Item	Description / Specifications
XPP1G30-BK **XPP1G30-SV** **XPP1G16-BK** **XPP1G16-SV**	**Outdoor Power Pedestal, 1-Gang Device Plate –** Designed for outdoor environments with a sheet metal form ensuring optimal performance and UL listed to NEMA 3R requirements. Single gang device plate allows for mounting of devices. For 15-20A devices, weather-resistance devices must be used with an in-use cover. Devices that are 30-60A must be water-tight or fitted with a suitable weatherproof cover. Available in standard 30" (XPP1G30) or 16" (XPP1G16) heights. Consult manufacturer for custom heights. Available in a black finish (BK) or silver finish (SV). **Country of Origin: USA** **Suggested Pass & Seymour While-In-Use Covers** WIUC10SX - Standard Depth WIUCAST1 - Cast Cover WIUC10FRED - Extra Heavy Duty **Suggested Pass & Seymour Weatherproof Covers** CA8-XX: Duplex Cover CA26-XX: Decora Cover CA721-X: 1.625" CA725-X: 1.750" CA723-X: 2.125" WPG1: Flip lid 15A Turn lock WPG2: Flip Lid 20/30A Turn lock 7425: Flip Lid 20/30A Turn lock 7770: Flip Lid 50A Turn Lock

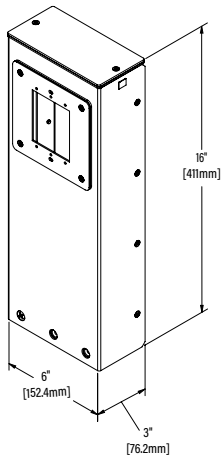

XPP1G16 (16"H)

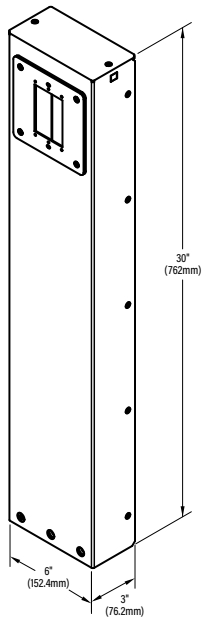

XPP1G130 (30"H)

Catalog No./Item	Description / Specifications
XPP1G30C-BK **XPP1G30C-SV** **XPP1G16C-BK** **XPP1G16C-SV**	**Outdoor Power Pedestal, 1-Gang Device Plate with Hinged Cover –** Designed for outdoor environments with a sheet metal form ensuring optimal performance and UL listed to NEMA 3R requirements. Single gang device plate allows for mounting of devices. For 15-20A devices, weather-resistance devices must be used (included cover provides in-use protection). Devices that are 30-60A must be water-tight or fitted with a suitable weatherproof cover. The hinged cover also provides improved security with the ability to lock pedestal while not in-use. Available in standard 30" (XPP1G30C) or 16" (XPP1G16C) heights. Consult manufacturer for custom heights. Available in a black finish (BK) or silver finish (SV). **Country of Origin: USA** **Note:** Some water-tight weatherproof covers such as flip lid styles (Pass and Seymour 7770, WPG1, WPG2) for 30-60A devices may fit under the provided hood. Hood is for aesthetics only when used with 30-60A devices.

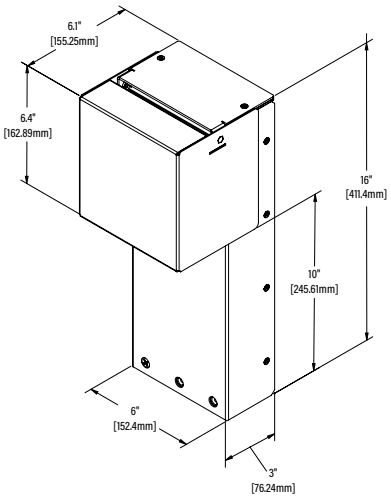

XPP1G16C (16"H)

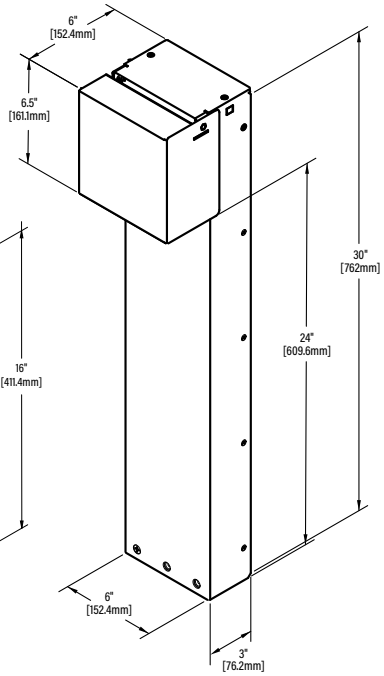

XPP1G30C (30"H)

Outdoor Power Pedestal Ordering Information

Catalog No./Item	Description / Specifications
XPP2G30-BK **XPP2G30-SV** **XPP2G16-BK** **XPP2G16-SV**	**Outdoor Power Pedestal, 2-Gang Device Plate –** Designed for outdoor environments with a sheet metal form ensuring optimal performance and UL listed to NEMA 3R requirements. Dual gang device plate allows for mounting of multiple devices. For 15-20A devices, weather-resistance devices must be used with an in-use cover. Devices that are 30-60A must be water-tight or fitted with a suitable weatherproof cover. Available in standard 30" (XPP2G30) or 16" (XPP2G16) heights. Consult manufacturer for custom heights. Available in a black finish (BK) or silver finish (SV). **Country of Origin: USA** **Suggested Pass & Seymour While-In-Use Covers** WIUC20X WIUCAST2 WIUC20FRED **Suggested Pass & Seymour Weatherproof Covers** CA82-X: (2) Duplex CA262-G: (2) Decora CA72-G: (2) Simplex 3796: 2.156" dia opening

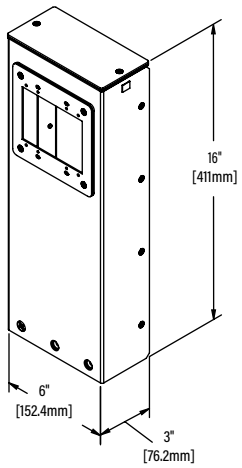

XPP2G16 (16"H)

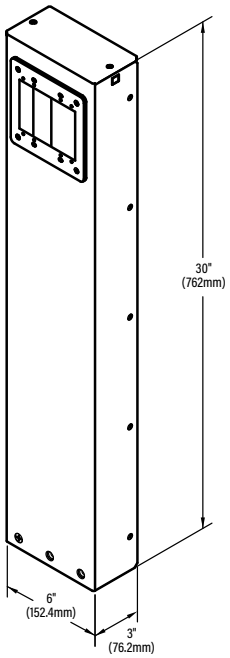

XXPP2G30 (30"H)

Catalog No./Item	Description / Specifications
XPP2G30D-BK **XPP2G30D-SV** **XPP2G16D-BK** **XPP2G16D-SV**	**Outdoor Power Pedestal, 2-Gang Device Plate with Internal Divider –** Designed for outdoor environments with a sheet metal form ensuring optimal performance and UL listed to NEMA 3R requirements. Dual gang device plate and internal divider allows for mounting of standard and low voltage devices. For 15-20A devices, weather-resistance devices must be used with an in-use cover. Devices that are 30-60A must be water-tight or fitted with a suitable weatherproof cover. Available in standard 30" (XPP2G30D) or 16" (XPP2G16D) heights. Consult manufacturer for custom heights. Available in a black finish (BK) or silver finish (SV). **Country of Origin: USA** **Suggested Pass & Seymour While-In-Use Covers** WIUC20X WIUCAST2 WIUC20FRED **Suggested Pass & Seymour Weatherproof Covers** CA82-X: (2) Duplex CA262-G: (2) Decora CA72-G: (2) Simplex 3796: 2.156" dia. opening

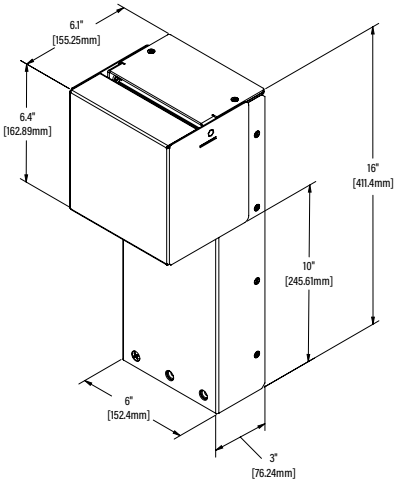

XPP2G16D (16"H)

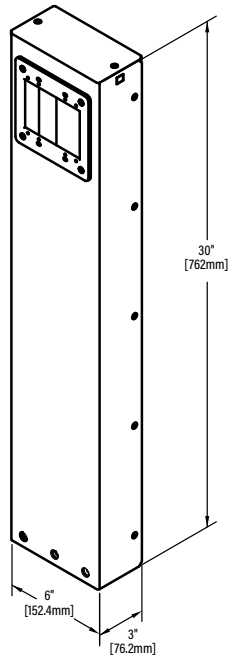

XPP2G30D (30"H)

Outdoor Power Pedestal Ordering Information

Catalog No./Item	Description / Specifications
XPP2G30C-BK **XPP2G30C-SV** **XPP2G16C-BK** **XPP2G16C-SV**	**Outdoor Power Pedestal, 2-Gang Device Plate with Hinged Cover –** Designed for outdoor environments with a sheet metal form ensuring optimal performance and UL listed to NEMA 3R requirements. Dual gang device plate allows for mounting of multiple devices. For 15-20A devices, weather-resistance devices must be used (included cover provides in-use protection). Devices that are 30-60A must be water-tight or fitted with a suitable weatherproof cover. The hinged cover also provides improved security with the ability to lock pedestal while not in-use. Available in standard 30" (XPP2G30C) or 16" (XPP2G16C) heights. Consult manufacturer for custom heights. Available in a black finish (BK) or silver finish (SV). **Country of Origin: USA**

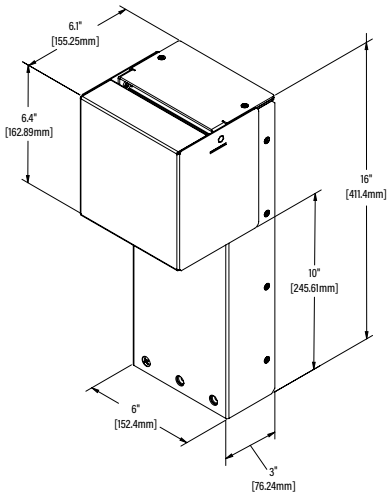

XPP2G16C (16"H)

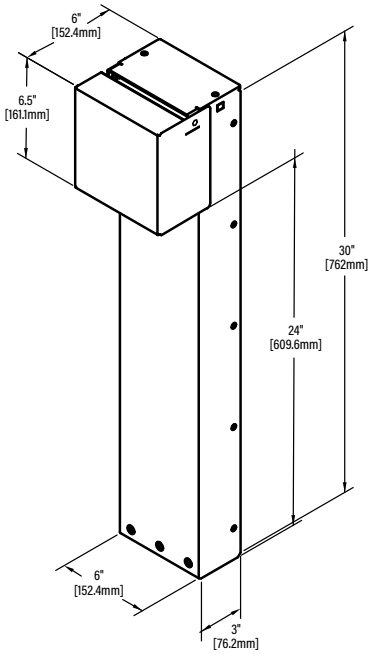

XPP2G30C (30"H)

Catalog No./Item	Description / Specifications
XPP2G30CD-BK **XPP2G30CD-SV** **XPP2G16CD-BK** **XPP2G16CD-SV**	**Outdoor Power Pedestal, 2-Gang Device Plate with Hinged Cover and Internal Divider –** Designed for outdoor environments with a sheet metal form ensuring optimal performance and UL listed to NEMA 3R requirements. Dual gang device plate and internal divider allows for mounting of standard and low voltage devices. For 15-20A devices, weather-resistance devices must be used (included cover provides in-use protection). Devices that are 30-60A must be water-tight or fitted with a suitable weatherproof cover. The hinged cover also provides improved security with the ability to lock pedestal while not in-use. Available in standard 30" (XPP2G30CD) or 16" (XPP2G16CD) heights. Consult manufacturer for custom heights. Available in a black finish (BK) or silver finish (SV). **Country of Origin: USA**

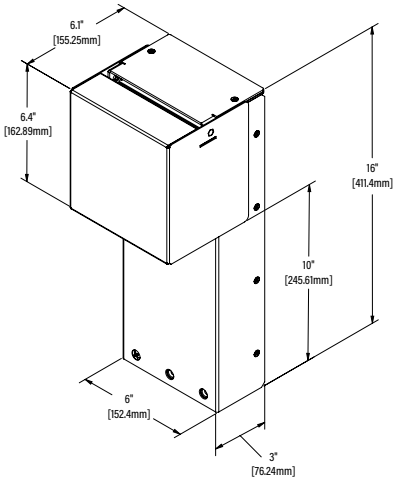

XPP2G16CD (16"H)

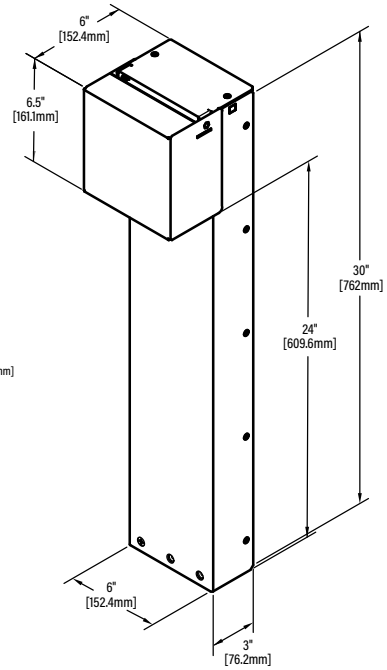

XPP2G30CD (30"H)

Outdoor Power Pedestal Ordering Information

Catalog No./Item	Description / Specifications
XPPPS30-BK **XPPPS30-SV** **XPPPS16-BK** **XPPPS16-SV**	**Outdoor Power Pedestal, Pin & Sleeve Device Plate –** Designed for outdoor environments with a sheet metal form ensuring optimal performance and UL listed to NEMA 3R requirements. The pin and sleeve device plate is for use with Pass & Seymour 30A Pin and Sleeve devices. Available in standard 30" (XPPPS30) or 16" (XPPPS16) heights. Consult manufacturer for custom heights. Available in a black finish (BK) or silver finish (SV). **Country of Origin: USA**

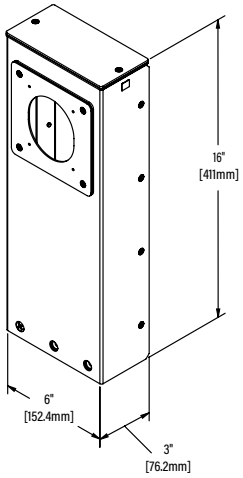

XPPPS16 (16"H)

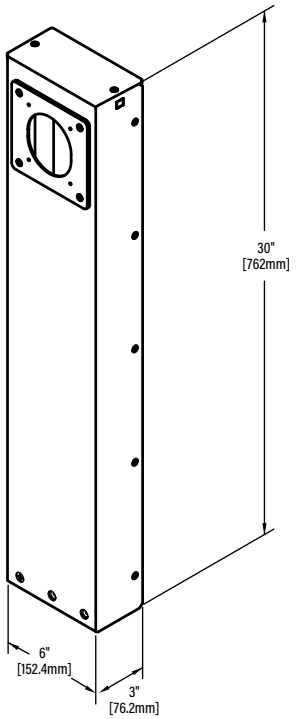

XPPPS30 (30"H)

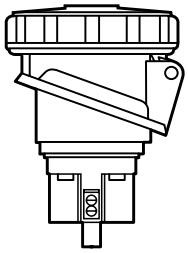

Available Pass & Seymour Pin and Sleeve Devices

3 Wire	4 Wire	5 Wire
S330R4W	PS430R12W	PS530R9W
S330R6W	PS430R9W	PS530R7W
S330R7W	PS430R7W	PS530R5W
	PS430R5W	
	PS430R3W	

Outdoor Power Pedestal Customization Information

The outdoor power pedestal is offered at a standard height of 30" but can be custom ordered for different heights to match your application from 16 – 48".

For custom orders and sizes, please contact your Legrand sales representative.

Outdoor Power Pedestal Accessories Ordering Information

XPP1GP-BK
XPP1GP-SV

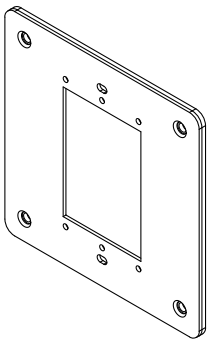

Replacement 1-Gang Device Plate – Replacement plate for 1-gang Outdoor Power Pedestal

Available in a black finish (BK) or silver finish (SV)

Country of Origin: USA

XPP1GPL-BK
XPP1GPL-SV

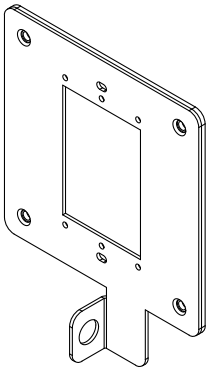

Replacement 1-Gang, Locking Device Plate – Replacement Plate for 1-gang Outdoor Power Pedestal with Hinged Cover.

Available in a black finish (BK) or silver finish (SV)

Country of Origin: USA

XPP2GP-BK
XPP2GP-SV

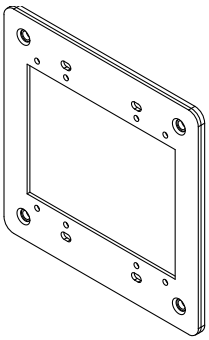

Replacement 2-Gang Device Plate – Replacement plate for 2-gang Outdoor Power Pedestal

Available in a black finish (BK) or silver finish (SV)

Country of Origin: USA

XPP2GPL-BK
XPP2GPL-SV

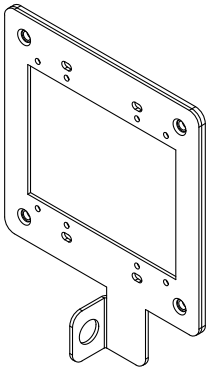

Replacement 2-Gang Locking Device Plate – Replacement plate for 2-gang Outdoor Power Pedestal with Hinged Cover

Available in a black finish (BK) or silver finish (SV)

Country of Origin: USA

XPPPSP-BK
XPPPSP-SV

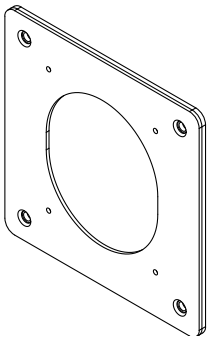

Replacement Pin & Sleeve Device Plate – Replacement plate for Pin & Sleeve Power Pedestal

Available in a black finish (BK) or silver finish (SV)

Country of Origin: USA

XPPC-BK
XPPC-SV

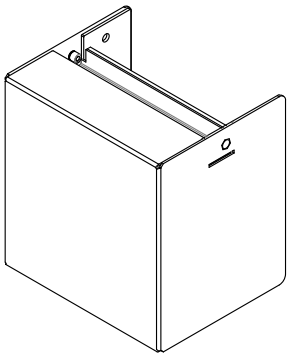

Replacement Cover for Outdoor Power Pedestal – Replacement hinged cover for Outdoor Power Pedestal

Available in a black finish (BK) or silver finish (SV)

Country of Origin: USA

NOTE: All brand and product names referenced in this document are registered trademarks or trademarks of their respective holders.

Legrand, North America
60 Woodlawn Street
West Hartford, CT 06110
1.877.BY.LEGRAND (295.3472)
www.legrand.us

Canada
905.738.9195
www.legrand.ca

FOLLOW US

WIREMOLD®

Outdoor Power Pedestal

Outdoor Power Pedestals offer new versatility to outdoor power applications

Provide Higher Power to Outdoor Locations

Designed to be used for high amperage outdoor applications, the Outdoor Power Pedestal can accommodate 15 to 60 amp devices. The pedestal is a durable solution to providing facility power to outdoor environments and applications such as food trucks, events or maintenance equipment. There are several configurations depending on the application requirements, including 1-gang, 2-gang or pin & sleeve device plates. Select configurations also include a hinged in-use cover that can be locked to prevent unauthorized access.

Features & Benefits

- **Provides standard power for facilities:** Can accommodate up to (2) 15-20A weather-resistant devices that can be used with the integrated while-in-use cover or any 3rd party while-in-use cover available for a 1 or 2 gang opening.
- **Provides higher amp power for facilities:** Pedestals can also accommodate higher 30-60A NEMA and CS devices. Higher amp devices that are watertight can be mounted directly to the pedestal while all others must use an appropriate weatherproof cover.
- **Pin and Sleeve Devices:** Standard Pin and Sleeve plate supports 30A Pass & Seymour Pin and Sleeve devices. **Note:** Pin and Sleeve devices do not have standard mounting hole locations, custom plates may be needed for other brands and/or amperages.
- **Height Options of 16" or 30":** Choose from two different height options to best meet the needs of your application.
- **Hinged cover with locking tab:** Cover closes automatically to meet while-in-use requirements for 15 and 20 amp devices and provides capability to lock cover when not in use to prevent unauthorized access.
- **Outdoor-rated construction:** Sheet metal form designed for durability in outdoor locations. UL listed to NEMA 3R requirements to ensure optimal performance.
- **Durable, premium finishes:** Available in two outdoor-rated finishes to complement your space design. Choose from black or silver to perfectly match your project.
- **UL Listed:** Standard 1773.
- **1 & 2 Gang Options:** Available in single or dual gang options with select configurations of dual gang including an internal divider for power and low voltage applications.

Vertical Markets

- **Commercial**
- **Parks**
- **Entertainment**
- **Transit**
- **Hospitality**

Compliance

CULus Listed, File Number E479489, Guide PUPR
Outdoor Power Pedestals are UL Listed to meet NEMA 3R requirements for use in outdoor locations.
Outdoor Power Pedestals comply with ADA guidelines.

Outdoor Power Pedestal Ordering Information

Catalog No./Item	Description / Specifications
XPP1G30-BK **XPP1G30-SV** **XPP1G16-BK** **XPP1G16-SV**	**Outdoor Power Pedestal, 1-Gang Device Plate –** Designed for outdoor environments with a sheet metal form ensuring optimal performance and UL listed to NEMA 3R requirements. Single gang device plate allows for mounting of devices. For 15-20A devices, weather-resistance devices must be used with an in-use cover. Devices that are 30-60A must be water-tight or fitted with a suitable weatherproof cover. Available in standard 30" (XPP1G30) or 16" (XPP1G16) heights. Consult manufacturer for custom heights. Available in a black finish (BK) or silver finish (SV). **Country of Origin: USA** **Suggested Pass & Seymour While-In-Use Covers** WIUC10SX - Standard Depth WIUCAST1 - Cast Cover WIUC10FRED - Extra Heavy Duty **Suggested Pass & Seymour Weatherproof Covers** CA8-XX: Duplex Cover CA26-XX: Decora Cover CA721-X: 1.625" CA725-X: 1.750" CA723-X: 2.125" WPG1: Flip lid 15A Turn lock WPG2: Flip Lid 20/30A Turn lock 7425: Flip Lid 20/30A Turn lock 7770: Flip Lid 50A Turn Lock

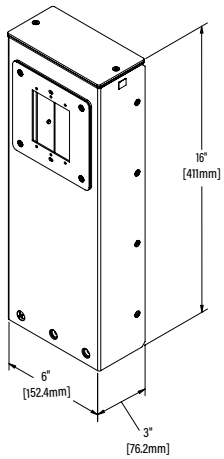

XPP1G16 (16"H)

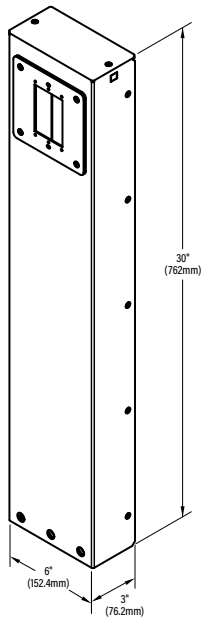

XPP1G130 (30"H)

Catalog No./Item	Description / Specifications
XPP1G30C-BK **XPP1G30C-SV** **XPP1G16C-BK** **XPP1G16C-SV**	**Outdoor Power Pedestal, 1-Gang Device Plate with Hinged Cover –** Designed for outdoor environments with a sheet metal form ensuring optimal performance and UL listed to NEMA 3R requirements. Single gang device plate allows for mounting of devices. For 15-20A devices, weather-resistance devices must be used (included cover provides in-use protection). Devices that are 30-60A must be water-tight or fitted with a suitable weatherproof cover. The hinged cover also provides improved security with the ability to lock pedestal while not in-use. Available in standard 30" (XPP1G30C) or 16" (XPP1G16C) heights. Consult manufacturer for custom heights. Available in a black finish (BK) or silver finish (SV). **Country of Origin: USA** **Note:** Some water-tight weatherproof covers such as flip lid styles (Pass and Seymour 7770, WPG1, WPG2) for 30-60A devices may fit under the provided hood. Hood is for aesthetics only when used with 30-60A devices.

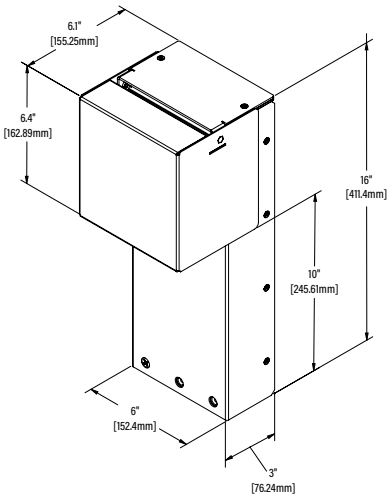

XPP1G16C (16"H)

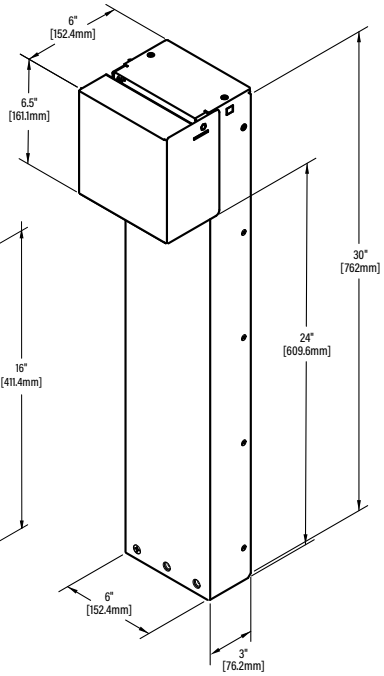

XPP1G30C (30"H)

Outdoor Power Pedestal Ordering Information

Catalog No./Item	Description / Specifications
XPP2G30-BK **XPP2G30-SV** **XPP2G16-BK** **XPP2G16-SV**	**Outdoor Power Pedestal, 2-Gang Device Plate –** Designed for outdoor environments with a sheet metal form ensuring optimal performance and UL listed to NEMA 3R requirements. Dual gang device plate allows for mounting of multiple devices. For 15-20A devices, weather-resistance devices must be used with an in-use cover. Devices that are 30-60A must be water-tight or fitted with a suitable weatherproof cover. Available in standard 30" (XPP2G30) or 16" (XPP2G16) heights. Consult manufacturer for custom heights. Available in a black finish (BK) or silver finish (SV). **Country of Origin: USA** **Suggested Pass & Seymour While-In-Use Covers** WIUC20X WIUCAST2 WIUC20FRED **Suggested Pass & Seymour Weatherproof Covers** CA82-X: (2) Duplex CA262-G: (2) Decora CA72-G: (2) Simplex 3796: 2.156" dia opening

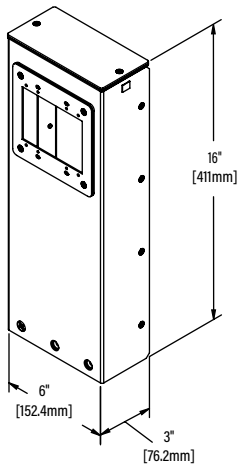

XPP2G16 (16"H)

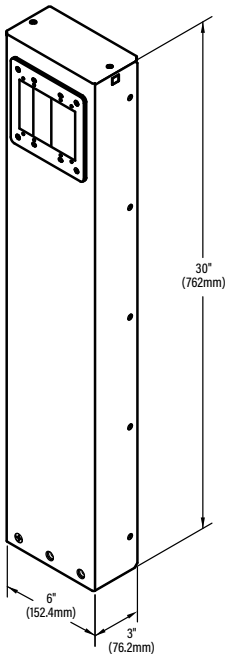

XXPP2G30 (30"H)

Catalog No./Item	Description / Specifications
XPP2G30D-BK **XPP2G30D-SV** **XPP2G16D-BK** **XPP2G16D-SV**	**Outdoor Power Pedestal, 2-Gang Device Plate with Internal Divider –** Designed for outdoor environments with a sheet metal form ensuring optimal performance and UL listed to NEMA 3R requirements. Dual gang device plate and internal divider allows for mounting of standard and low voltage devices. For 15-20A devices, weather-resistance devices must be used with an in-use cover. Devices that are 30-60A must be water-tight or fitted with a suitable weatherproof cover. Available in standard 30" (XPP2G30D) or 16" (XPP2G16D) heights. Consult manufacturer for custom heights. Available in a black finish (BK) or silver finish (SV). **Country of Origin: USA** **Suggested Pass & Seymour While-In-Use Covers** WIUC20X WIUCAST2 WIUC20FRED **Suggested Pass & Seymour Weatherproof Covers** CA82-X: (2) Duplex CA262-G: (2) Decora CA72-G: (2) Simplex 3796: 2.156" dia. opening

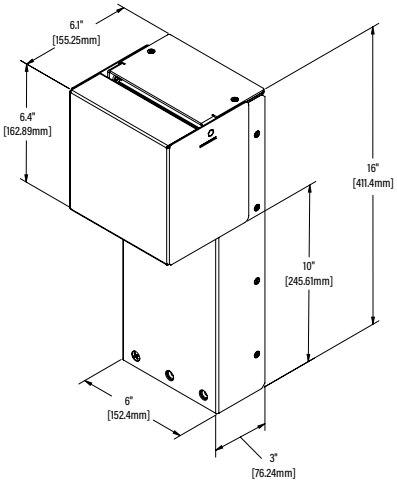

XPP2G16D (16"H)

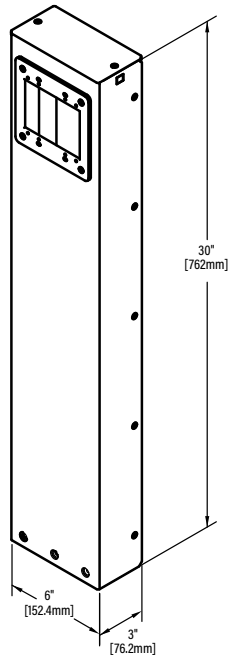

XPP2G30D (30"H)

Outdoor Power Pedestal Ordering Information

Catalog No./Item	Description / Specifications
XPP2G30C-BK **XPP2G30C-SV** **XPP2G16C-BK** **XPP2G16C-SV**	**Outdoor Power Pedestal, 2-Gang Device Plate with Hinged Cover –** Designed for outdoor environments with a sheet metal form ensuring optimal performance and UL listed to NEMA 3R requirements. Dual gang device plate allows for mounting of multiple devices. For 15-20A devices, weather-resistance devices must be used (included cover provides in-use protection). Devices that are 30-60A must be water-tight or fitted with a suitable weatherproof cover. The hinged cover also provides improved security with the ability to lock pedestal while not in-use. Available in standard 30" (XPP2G30C) or 16" (XPP2G16C) heights. Consult manufacturer for custom heights. Available in a black finish (BK) or silver finish (SV). **Country of Origin: USA**

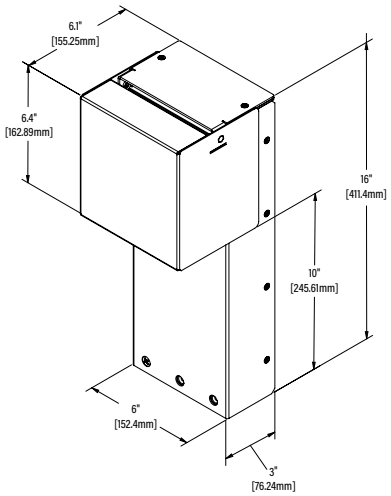

XPP2G16C (16"H)

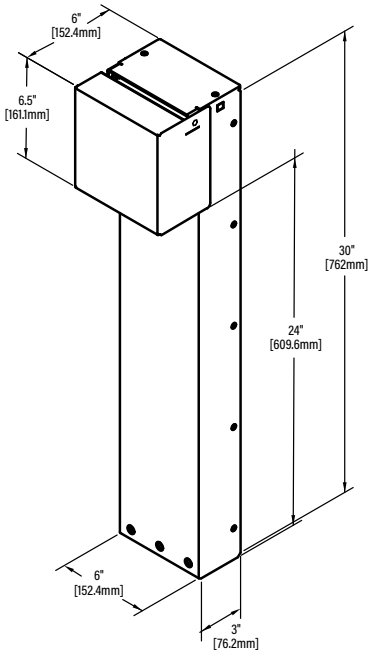

XPP2G30C (30"H)

Catalog No./Item	Description / Specifications
XPP2G30CD-BK **XPP2G30CD-SV** **XPP2G16CD-BK** **XPP2G16CD-SV**	**Outdoor Power Pedestal, 2-Gang Device Plate with Hinged Cover and Internal Divider –** Designed for outdoor environments with a sheet metal form ensuring optimal performance and UL listed to NEMA 3R requirements. Dual gang device plate and internal divider allows for mounting of standard and low voltage devices. For 15-20A devices, weather-resistance devices must be used (included cover provides in-use protection). Devices that are 30-60A must be water-tight or fitted with a suitable weatherproof cover. The hinged cover also provides improved security with the ability to lock pedestal while not in-use. Available in standard 30" (XPP2G30CD) or 16" (XPP2G16CD) heights. Consult manufacturer for custom heights. Available in a black finish (BK) or silver finish (SV). **Country of Origin: USA**

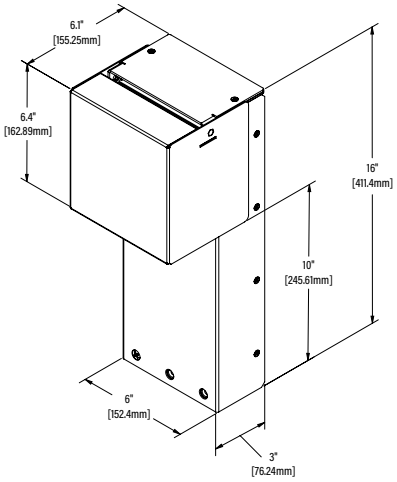

XPP2G16CD (16"H)

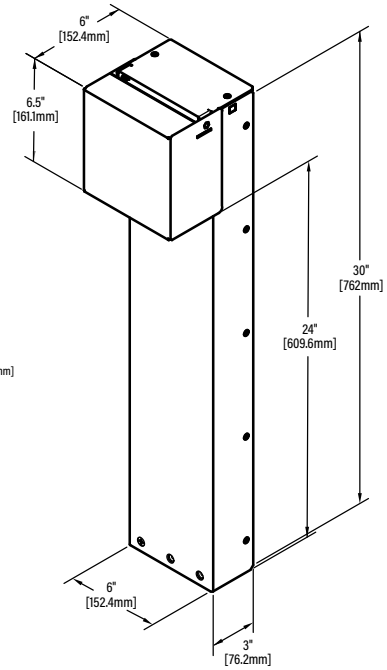

XPP2G30CD (30"H)

Outdoor Power Pedestal Ordering Information

Catalog No./Item	Description / Specifications
XPPPS30-BK **XPPPS30-SV** **XPPPS16-BK** **XPPPS16-SV**	**Outdoor Power Pedestal, Pin & Sleeve Device Plate –** Designed for outdoor environments with a sheet metal form ensuring optimal performance and UL listed to NEMA 3R requirements. The pin and sleeve device plate is for use with Pass & Seymour 30A Pin and Sleeve devices. Available in standard 30" (XPPPS30) or 16" (XPPPS16) heights. Consult manufacturer for custom heights. Available in a black finish (BK) or silver finish (SV). **Country of Origin: USA**

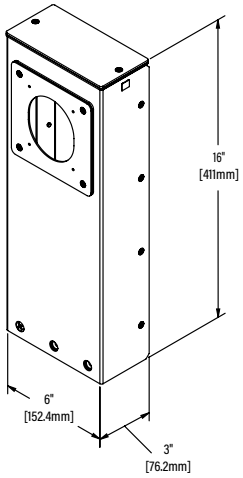

XPPPS16 (16"H)

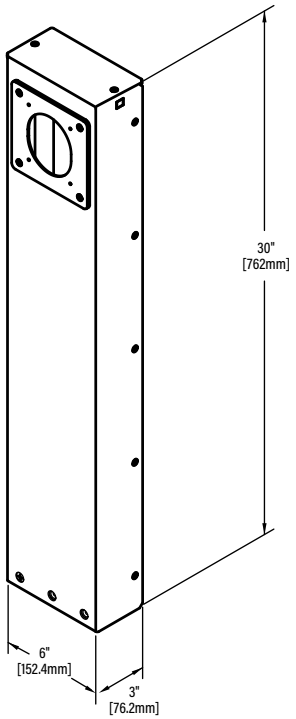

XPPPS30 (30"H)

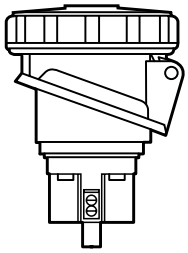

Available Pass & Seymour Pin and Sleeve Devices

3 Wire	4 Wire	5 Wire
S330R4W	PS430R12W	PS530R9W
S330R6W	PS430R9W	PS530R7W
S330R7W	PS430R7W	PS530R5W
	PS430R5W	
	PS430R3W	

Outdoor Power Pedestal Customization Information

The outdoor power pedestal is offered at a standard height of 30" but can be custom ordered for different heights to match your application from 16 – 48".

For custom orders and sizes, please contact your Legrand sales representative.

Outdoor Power Pedestal Accessories Ordering Information

XPP1GP-BK
XPP1GP-SV

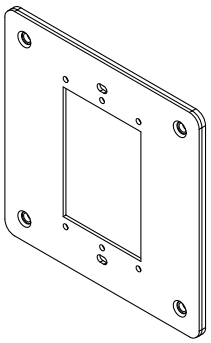

Replacement 1-Gang Device Plate – Replacement plate for 1-gang Outdoor Power Pedestal

Available in a black finish (BK) or silver finish (SV)

Country of Origin: USA

XPP1GPL-BK
XPP1GPL-SV

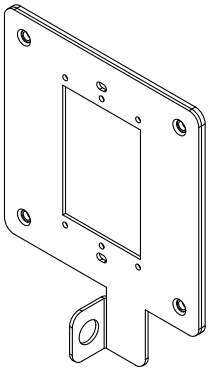

Replacement 1-Gang, Locking Device Plate – Replacement Plate for 1-gang Outdoor Power Pedestal with Hinged Cover.

Available in a black finish (BK) or silver finish (SV)

Country of Origin: USA

XPP2GP-BK
XPP2GP-SV

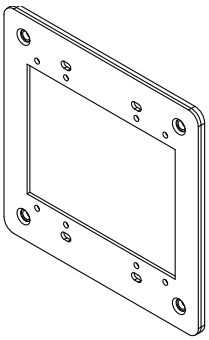

Replacement 2-Gang Device Plate – Replacement plate for 2-gang Outdoor Power Pedestal

Available in a black finish (BK) or silver finish (SV)

Country of Origin: USA

XPP2GPL-BK
XPP2GPL-SV

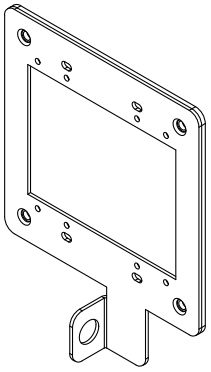

Replacement 2-Gang Locking Device Plate – Replacement plate for 2-gang Outdoor Power Pedestal with Hinged Cover

Available in a black finish (BK) or silver finish (SV)

Country of Origin: USA

XPPPSP-BK
XPPPSP-SV

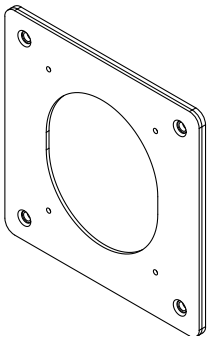

Replacement Pin & Sleeve Device Plate – Replacement plate for Pin & Sleeve Power Pedestal

Available in a black finish (BK) or silver finish (SV)

Country of Origin: USA

XPPC-BK
XPPC-SV

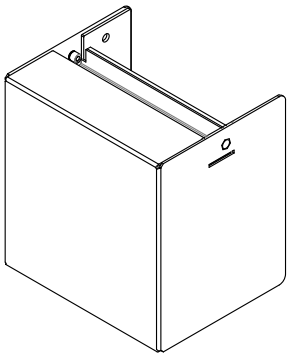

Replacement Cover for Outdoor Power Pedestal – Replacement hinged cover for Outdoor Power Pedestal

Available in a black finish (BK) or silver finish (SV)

Country of Origin: USA

NOTE: All brand and product names referenced in this document are registered trademarks or trademarks of their respective holders.

Legrand, North America
60 Woodlawn Street
West Hartford, CT 06110
1.877.BY.LEGRAND (295.3472)
www.legrand.us

Canada
905.738.9195
www.legrand.ca

FOLLOW US